Development and Field Testing of Small Biomass Gasifier-Engine Systems in India

A Joint Project by an American and Indian Team

MITRE

Notice

This report was prepared as an account of work sponsored by the Department of Non-conventional Energy Sources, Government of India; the Pittsburgh Energy Technology Center; and the U.S. Agency for International Development (USAID). Neither the United States nor the USAID, nor any of their employees, nor any of their contractors, subcontractors, or their employees, make any warranty, expressed or implied, or assume any legal liability or responsibility for the accuracy, completeness, or usefulness of any information, apparatus, product, or process disclosed, or represent that its use would not infringe privately owned rights.

PN-ABH-184

Development and Field Testing of Small Biomass Gasifier-Engine Systems in India

A Joint Project by an American and Indian Team

American Team

Abu Talib
The MITRE Corporation
John R. Goss
University of California, Davis (UCD)
Virgil J. Flanigan
University of Missouri, Rolla (UMR)

Indian Team

Project A Indian Institute of Technology (IIT, Delhi)
P. D Grover
T. R. Rao
S. Gaur
N. Anuradha

Project B Indian Institute of Technology (IIT, Delhi)
H. B. Mathur
K. Pal
L. Mohan Das

Project C JYOTI Solar Energy Institute (JSEI)
M. B. Durgaprasad
R. N. Pandya
S. R. Patel
V. K. Jain
K. S. Shah

April 1987

MTR-87W2

The MITRE Corporation
Civil Systems Division
7525 Colshire Drive
McLean, Virginia 22102-3481

MITRE Department
and Project Approval: _____

Rodney K. Lay
Department Head, W-51
System Planning and Analysis

ABSTRACT

Under a multi-year United States/India Cooperative Alternative Energy Program, small (about 5 horsepower) biomass gasifier-engine systems were designed, fabricated, and after laboratory testing, underwent field demonstration tests for lifting irrigation water on selected rural sites in India. This technical report presents the work accomplished under the system design, development, laboratory, and field testing phases. Recommendations are made with respect to commercializing biomass gasification technology in India.

Suggested Keywords: Biomass conversion, synthetic fuels, wood fuels, low Btu gas, diesel engines, renewable energy, developing countries

ACKNOWLEDGMENTS

Many persons during the course of this U.S./India alternative energy collaboration program have contributed to the successful implementaiton of the biomass conversion component. The authors extend their gratitude to Dr. Daniel Bienstock, Pittsburgh Energy Technology Center, U.S. Program Manager, whose inspiring and dedicated leadership was instrumental in the successful completion of this collaborative energy program. We thank Dr. Amol Kulkarni of Viking, Inc., for carrying out the equipment procurement and shipment tasks.

We also thank the USAID mission and DNES staff members for their cooperation and significant inputs to the logistical aspects of this program. Finally our special thanks to Ms. Barbara Wise for her invaluable assistance and patience in typing the text and providing editorial assistance.

TABLE OF CONTENTS

	Page
LIST OF FIGURES	vii
LIST OF TABLES	xi
EXECUTIVE SUMMARY	xiii
1.0 INTRODUCTION AND BACKGROUND	1-1
1.1 Introduction	1-1
1.1.1 Objectives of Biomass Conversion Program	1-1
1.1.2 Biomass Conversion Program Organization	1-3
1.2 Background	1-6
2.0 PROJECT IMPLEMENTATION STRATEGY	2-1
3.0 DESIGN AND DEVELOPMENT EFFORTS	3-1
3.1 Design and Development Efforts of Project C	3-1
3.1.1 Functional Characteristics	3-1
3.1.2 Design, Development and Testing	3-5
3.2 Design and Development Efforts of Project A	3-20
3.2.1 Choice of Fuel	3-20
3.2.2 The Gasification System	3-21
3.2.3 Gasifier and Gas Cleanup System Development	3-21
3.3 Design and Development Efforts of Project B	3-34
3.3.1 Engine Intake System Modification	3-36
3.3.2 Experimental Setup and Techniques	3-36
3.3.3 Discussion of Test Results	3-38
3.3.4 Summary of Test Results	3-52
3.4 Joint Laboratory Testing	3-53
4.0 FIELD TESTING EFFORTS	4-1
4.1 Field Testing Efforts of Project C	4-1

TABLE OF CONTENTS (Concluded)

	Page
4.1.1 Site Selection	4-1
4.1.2 Site Preparation	4-2
4.1.3 Training of the Local Operator	4-2
4.1.4 Field Unit Performance	4-2
4.2 Field Testing Efforts of Projects A and B	4-7
4.2.1 Site Selection	4-7
4.2.2 Site Preparation and Construction	4-11
4.2.3 Training of the Local Operator	4-14
4.2.4 Field Unit Performance	4-16
4.3 Comparative System Performance	4-16
5.0 U.S. PROJECT TEAM CONTRIBUTIONS	5-1
5.1 Project Pre-Implementation	5-1
5.1.1 Technical Information Exchange	5-1
5.1.2 Project Implementation Approach	5-2
5.1.3 Project Requirements	5-2
5.2 Project Implementation	5-6
5.2.1 U.S. Equipment and Instrumentation	5-7
5.2.2 Personnel Training	5-13
5.2.3 System Design and Field Installation	5-31
5.3 Project Monitoring and Data Evaluation	5-39
6.0 CONCLUSIONS AND RECOMMENDATIONS	6-1
6.1 Conclusions	6-1
6.2 Recommendations	6-2
REFERENCES	RE-1
APPENDIX A: GASIFIER DESIGN CALCULATIONS	A-1
APPENDIX B: GASIFIER-ENGINE OPERATION MANUALS	B-1

LIST OF FIGURES

Figure Number		Page
ES-1	GASIFIER-BASED GENERIC ALTERNATIVE IRRIGATION SYSTEM	xiv
ES-2	THE U.S./INDIA BIOMASS CONVERSION PROGRAM ORGANIZATION	xvi
ES-3	PROJECT IMPLEMENTATION APPROACH	xviii
1-1	THE U.S./INDIA BIOMASS CONVERSION PROGRAM ORGANIZATION	1-5
3-1	JSEI GASIFIER SYSTEM	3-2
3-2	TYPICAL REACTION ZONES IN A DOWNDRAFT GASIFIER	3-3
3-3	ORIGINAL JSEI GASIFIER DESIGN (G-50 MODEL)	3-6
3-4	JSEI GAS CLEANUP UNIT	3-8
3-5	VENTURI AIR-GAS MIXING DEVICE	3-9
3-6	PHOTOGRAPH OF JSEI GASIFIER-ENGINE SYSTEM (G-50 MODEL)	3-11
3-7	AVERAGE DIESEL FUEL REPLACEMENT OVER A PERIOD OF OPERATION	3-13
3-8	MODIFIED JSEI GASIFIER DESIGN (G-55 MODEL)	3-15
3-9	SCHEMATIC DIAGRAM OF MODIFIED GASIFIER-ENGINE SYSTEM	3-16
3-10	LABORATORY PERFORMANCE OF GASIFIER-ENGINE SYSTEM (G-55 MODEL)	3-18
3-11	PART LOAD PERFORMANCE OF GASIFIER-ENGINE SYSTEM (G-55 MODEL)	3-19
3-12	SMALL SCALE BIOMASS GASIFIER-GAS CLEANUP SYSTEM DEVELOPED BY PRCJECT A	3-22
3-13	FIRST GASIFIER DESIGN DEVELOPED BY PROJECT A (G-60 MODEL)	3-24
3-14	CROSS-SECTIONAL VIEW OF G-45 GASIFIER	3-26
3-15	SCHEMATIC DIAGRAM OF WETTED WALL CYCLONE SEPARATOR	3-30
3-16	CHOKED THROAT PLATE DUE TO ASH CLINKERING	3-33

LIST OF FIGURES (Continued)

Figure Number		Page
3-17	TYPICAL PERFORMANCE OF G-45 GASIFIER SYSTEM	3-35
3-18	ENGINE INTAKE SYSTEM RETROFIT	3-37
3-19	EXPERIMENTAL SETUP FOR CONDUCTING ENGINE PERFORMANCE TESTS	3-39
3-20	ENGINE PERFORMANCE FOR DIESEL AND DUAL-FUEL OPERATION TESTED UNDER PROJECT B	3-40
3-21	VARIATION OF SPECIFIC FUEL CONSUMPTION (BSFC) WITH ENGINE OUTPUT FOR DIFFERENT INJECTION TIMINGS	3-42
3-22	VARIATION OF BRAKE THERMAL EFFICIENCY WITH ENGINE OUTPUT FOR DIFFERENT INJECTION TIMINGS	3-43
3-23	VARIATION OF PERCENT ENERGY INPUT BY PRODUCER GAS AND THERMAL EFFICIENCY WITH INJECTION TIMING	3-44
3-24	VARIATION OF SPECIFIC FUEL CONSUMPTION WITH PRODUCER GAS FLOW RATE AT DIFFERENT ENGINE OUTPUT	3-45
3-25	VARIATION OF BRAKE THERMAL EFFICIENCY WITH INJECTION TIMING AT DIFFERENT PRODUCER GAS FLOW RATES	3-47
3-26	VARIATION OF SPECIFIC FUEL CONSUMPTION WITH ENGINE OUTPUT AT DIFFERENT COMPRESSION RATIOS	3-48
3-27	VARIATION OF CARBON MONOXIDE WITH ENGINE OUTPUT AT DIFFERENT PRODUCER GAS FLOW RATES	3-49
3-28	VARIATION OF EXHAUST SMOKE DENSITY WITH PRODUCER GAS FLOW RATE AT DIFFERENT ENGINE OUTPUTS	3-50
3-29	ENGINE PERFORMANCE CHARACTERISTICS FOR DUAL-FUEL OPERATION	3-51
3-30	GASIFIER-ENGINE PERFORMANCE DURING A TYPICAL LABORATORY RUN	3-58
4-1	FLOOR PLAN AND ELEVATION FOR THE FIELD DEMONSTRATION UNIT	4-3
4-2	FOUNDATION DETAILS FOR GASIFIER-ENGINE PUMPSET SYSTEM	4-4

LIST OF FIGURES (Continued)

Figure Number		Page
4-3	GENERAL VIEW OF THE GASIFIER SYSTEM INSTALLED ON A FARM AT VILLAGE JORH	4-5
4-4	G-50 MODEL GASIFIER SYSTEM INSTALLED AT JORH	4-6
4-5	FLOOR PLAN FOR THE GASIFIER-ENGINE SYSTEM INSTALLED AT SANKROD	4-15
5-1	U.S. GASIFIER-ENGINE-GENERATOR SYSTEM DEMONSTRATED DURING THE FIRST WORKSHOP	5-3
5-2	PROJECT IMPLEMENTATION APPROACH	5-4
5-3	SCHEMATIC DIAGRAM OF U.S. TEST GASFIER-ENGINE SYSTEM	5-8
5-4	CROSS-SECTION OF U.S. TEST GASIFIER AND GAS CLEANUP SYSTEM	5-9
5-5	PHOTOGRAPH OF GASIFIER-ENGINE SYSTEM DEVELOPED BY PROJECT B	5-12
5-6	SCHEMATIC DIAGRAM OF SMALL RICE HULL GASIFIER-ENGINE SYSTEM AT UCD	5-25
5-7	FLUIDIZED BED GAS PRODUCER AND GAS CONDITIONING SYSTEM AT UCD	5-26
5-8	DETAILED INSTRUMENTATION DIAGRAM FOR THE UCD RICE HUSK GASIFIER-ENGINE SYSTEM	5-27
5-9	FIRST GASIFIER DESIGN DEVELOPED BY PROJECT A (G-60 MODEL)	5-33
5-10	DETAILED INSTRUMENTATION DIAGRAM FOR JSEI GASIFIER-ENGINE SYSTEM	5-37
B-1	JSEI G-55 MODEL GASIFIER	B-6
B-2	VENTURI SCRUBBER	B-6
B-3	WET AND DRY FILTER	B-7
B-4	SECURITY FILTER	B-7

LIST OF FIGURES (Concluded)

Figure Number		Page
B-5	GASIFIER-ENGINE PUMPSET FOUNDATION	B-8
B-6	GASIFIER-ENGINE PUMPSET	B-9
B-7	WATER CONNECTIONS TO VENTURI SCRUBBER AND WET FILTER	B-10
B-8	CROSS-SECTIONAL VIEW OF G-45 GASIFIER	B-23
B-9	SCHEMATIC DIAGRAM OF WETTED WALL CYCLONE SEPARATOR	B-27
B-10	FILTER/SURGE TANK	B-30
B-11	U.S. TEST GASIFIER-ENGINE SYSTEM	B-38
B-12	CROSS-SECTION OF U.S. TEST GASIFIER AND GAS CLEANUP SYSTEM	B-39

LIST OF TABLES

Table Number		Page
ES-1	COMPARATIVE SYSTEM PERFORMANCE: GASIFIER-ENGINE SYSTEM DEVELOPED UNDER PROJECT C	xx
ES-2	COMPARATIVE SYSTEM PERFORMANCE: GASIFIER-ENGINE SYSTEM DEVELOPED UNDER PROJECTS A AND B	xxi
1-1	RESPECTIVE UNITED STATES AND INDIAN PROJECT TEAMS	1-4
2-1	BREAKDOWN OF INDIVIDUAL PROJECT EFFORTS UNDER EACH PHASE	2-2
3-1	COMPOSITION OF PRODUCER GAS FROM WOOD	3-4
3-2	TECHNICAL SPECIFICATIONS FOR G-50 GASIFIER-ENGINE SYSTEM	3-10
3-3	PROXIMATE ANALYSIS AND HEATING VALUE OF THE WOOD FUELS TESTED	3-12
3-4	EXTENT OF DIESEL DISPLACEMENT OF DIFFERENT WOOD FUELS	3-12
3-5	SYSTEM SPECIFICATIONS OF THE G-55 GASIFIER UNIT	3-17
3-6	SPECIFICATIONS OF THE G-45 GASIFIER	3-28
3-7	GASIFIER OPERATING DATA	3-31
3-8	GASIFIER PERFORMANCE DATA	3-32
3-9	TYPICAL DATA COLLECTED DURING INTEGRATED LABORATORY TESTS	3-55
3-10	SYSTEM PERFORMANCE DURING A TYPICAL LABORATORY RUN	3-57
3-11	SYSTEM PERFORMANCE DURING 50-HOUR INTEGRATED LABORATORY TESTS	3-60
4-1	PERFORMANCE EVALUATION OF DEMONSTRATION UNIT AT JORH ORIGINAL JSEI MODEL (G-50)	4-8
4-2	PERFORMANCE EVALUATION OF DEMONSTRATION UNIT AT JORH MODIFIED JSEI MODEL (G-55)	4-10

LIST OF TABLES (Concluded)

Table Number		Page
4-3	CRITERIA FOR DEMONSTRATION SITE SELECTION	4-12
4-4	FIELD OPERATING DATA AND SYSTEM PERFORMANCE	4-17
4-5	COMPARATIVE SYSTEM PERFORMANCE: GASIFIER-ENGINE SYSTEM DEVELOPED UNDER PROJECT C	4-18
4-6	COMPARATIVE SYSTEM PERFORMANCE: GASIFIER-ENGINE SYSTEM DEVELOPED UNDER PROJECTS A AND B	4-19
5-1	PERFORMANCE OF U.S. TEST GASIFIER-ENGINE SYSTEM	5-10
5-2	LIST OF EQUIPMENT PROVIDED FROM THE UNITED STATES FOR PROJECT A	5-14
5-3	LIST OF EQUIPMENT PROVIDED FROM THE UNITED STATES FOR PROJECT B	5-17
5-4	LIST OF EQUIPMENT PROVIDED FROM THE UNITED STATES FOR PROJECT C	5-20
5-5	LIST OF EQUIPMENT: BRIGGS AND STRATTON ENGINE PERFORMANCE ANALYSIS SYSTEM	5-32
5-6	DESCRIPTION OF DATA INSTRUMENTATION POINTS	5-40
B-1	TECHNICAL SPECIFICATIONS OF THE GASIFIER SYSTEM	B-4
B-2	PERFORMANCE DATA	B-14
B-3	SYMPTONS OF CARBON MONXIDE POISONING	B-19

EXECUTIVE SUMMARY

As part of an overall effort to reduce the dependence on imported oil, the Government of India and the United States Agency for International Development (USAID) have recently completed a three year collaborative research and development program. The overall objective of this program was to develop and implement alternative energy technologies in India. A major component of this program involved development and field testing of biomass conversion technologies that can significantly decrease India's dependence on imported oil. This report presents the results of the biomass conversion technology development and field implementation efforts carried out over the last three years in India.

Based on the availability of biomass resources and their potential for substitution of significant imported oil, the agricultural sector was considered the most viable candidate for application of biomass conversion technology. For example, millions of small farms in India are presently irrigated by diesel-oil-powered irrigation pumps. These dispersed diesel irrigation pumps can potentially be fueled by producer gas (i.e., a low calorie fuel gas) obtained from gasifying biomass feedstocks. The most common size of these diesel engine-operated pumps falls between 5 and 30 horsepower (hp). Because of this tremendous market potential, the biomass conversion component of the collaborative program was designed primarily to develop and field test small gasifier-engine systems.

A generic gasifier-based irrigation system is presented in Figure ES-1. As shown in this figure, the major components of this system are:

- Gasifier
- Gas cleanup
- Modified diesel engine
- Centrifugal water pump

The gasifier, under partial oxidizing conditions, converts solid biomass fuels into raw producer gas, a mixture of gases containing carbon monoxide and hydrogen as the primary combustible constituents. The producer gas is then cooled and cleaned to remove particulate matter and condensable organic compounds. These unit operations are normally accomplished in the gas cleanup subsystem using a combination of cyclone and wet scrubbers. A final filtering step is included to ensure the removal of fine particulates and organic mist that could be detrimental to the diesel engine operation. A modified commercial diesel engine burns producer gas along with small quantities of pilot diesel fuel. The engine is directly coupled to a

Figure ES-1
Gasifier-Based Generic Alternative Irrigation System

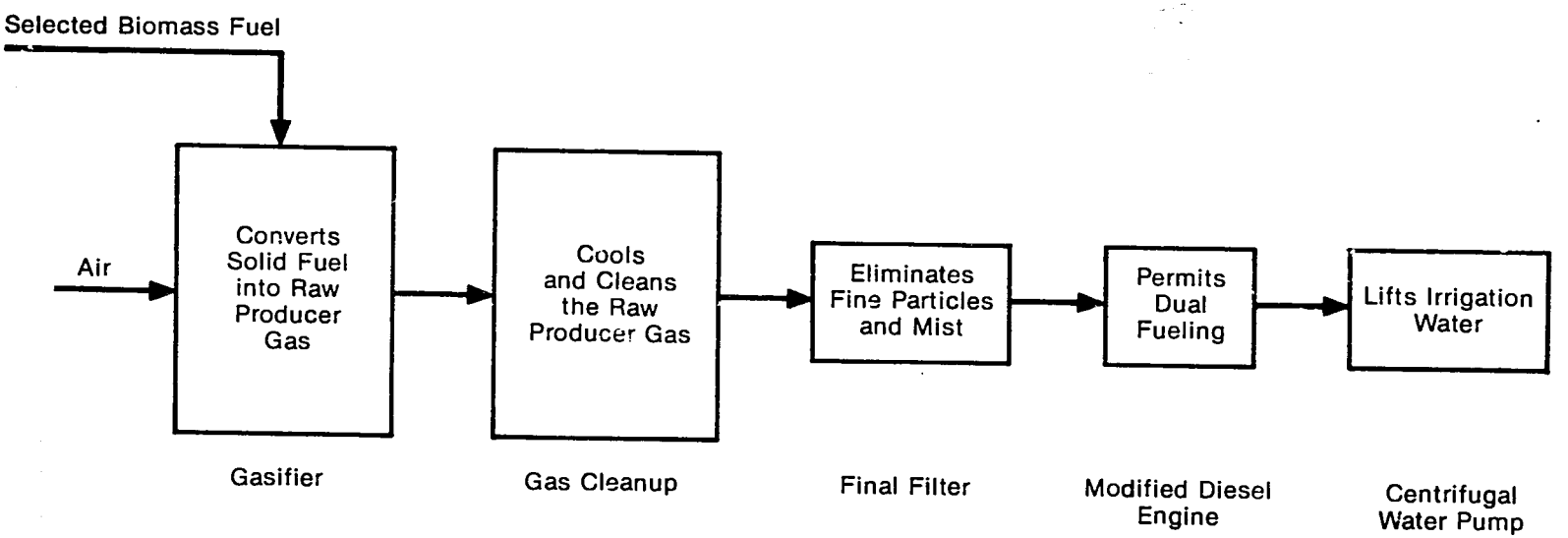

a centrifugal pump that lifts the irrigation water. As such, no modifications are required for the water pump operation.

In order to carry out the design, development, and field testing of a specific biomass gasifier-based irrigation system, the following three projects were initiated in India:

Project A: Development of a village-level gasifier for irrigation pumps, based on charred agricultural residue

Project B: Utilization of producer gas in small horsepower diesel engines

Project C: Development and field implementation of small wood-based gasifier engine systems

The technical work of these projects was conducted under the direct supervision of Indian engineers and scientists from participating institutions. In addition, U.S. specialists in biomass gasification were closely involved in the design, development, and implementation of the three biomass projects. The biomass conversion program organization is given in Figure ES-2. As indicated earlier, the program was jointly sponsored by the USAID and the Department of Non-conventional Energy Sources (DNES), Government of India. The Pittsburgh Energy Technology Center (PETC), under the Participating Agency Service Agreement (PASA), was given the overall management responsibility for implementing the energy collaboration program.

The U.S. project team consisted of The MITRE Corporation, University of California at Davis (UCD), and University of Missouri at Rolla (UMR). The MITRE Corporation, McLean, Virginia, under a contract with PETC, provided the technical and management support to the biomass conversion component. The biomass gasification specialists from the Department of Agricultural Engineering, UCD, and the Department of Mechanical Engineering, UMR, served as technical advisors to the three projects.

The Indian project teams were led by individual principal investigators; each team consisted of chemical, mechanical, and civil engineers, and technicians. Specifically, Projects A and B were carried out in the chemical and mechanical engineering departments, respectively, of the Indian Institute of Technology (IIT), New Delhi. Project C was carried out by the Jyoti Solar Energy Institute (JSEI), Vallabh Vidyanagar, Gujarat. Considering the diversity of biomass resources available in India, Projects A and B were focused on using agricultural wastes such as corncobs, peanut hulls, and cotton refuse as the primary feedstocks. Project C, on the other hand, used wood chips as the primary feedstock.

Figure ES-2
The U.S./India Biomass Conversion Program Organization

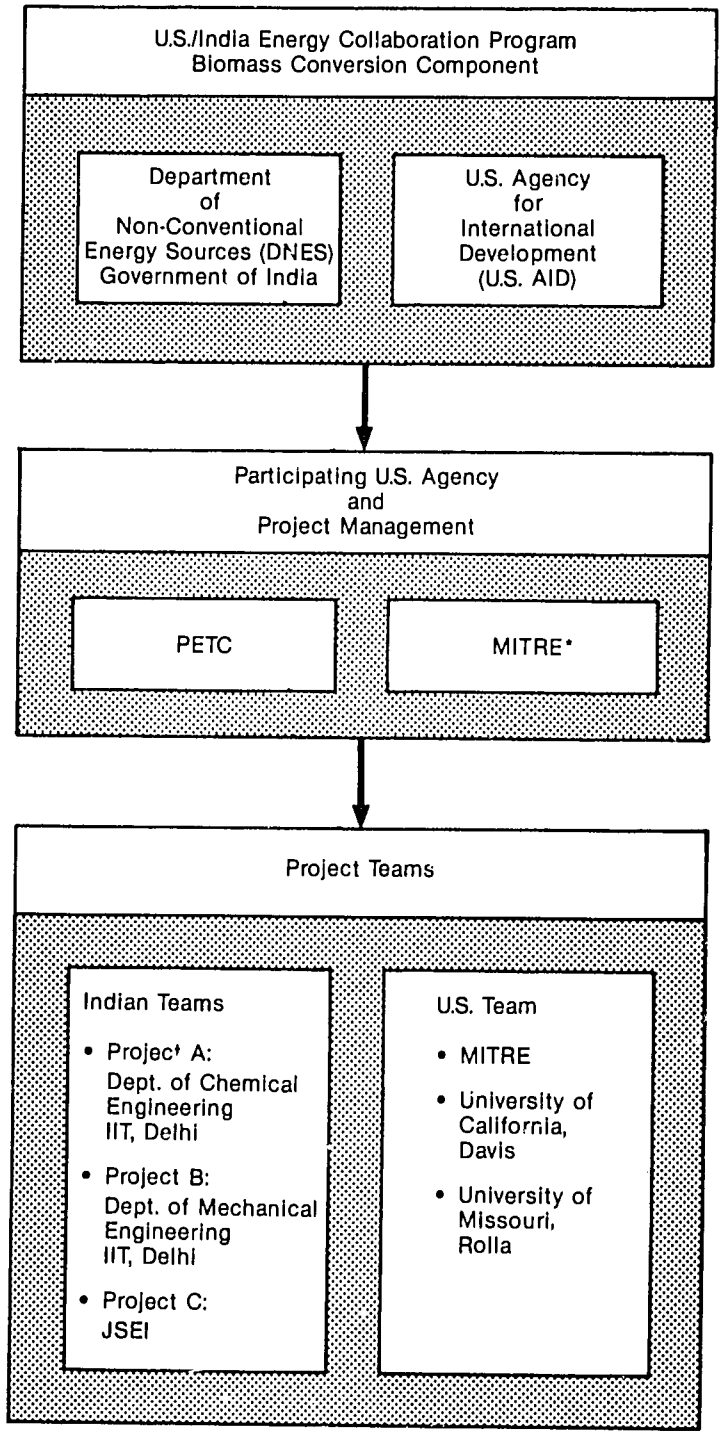

*Dual Role

A phased implementation strategy is presented in Figure ES-3. This strategy was developed to facilitate the design and development, laboratory, and field testing, and personnel training tasks of these three projects. The projects were carried out in three phases, with each phase approximately twelve months long. Phase 1 was devoted to tasks relating to project design and development and preliminary equipment testing. During phase 2, tasks pertaining to the fabrication and short-term testing of field trial gasifier-engine systems were carried out. Phase 3 was devoted to carrying out tasks relating to long-term field testing, operator training, and documentation.

The major accomplishments of both the Indian and United States project teams during the course of this three-year collaborative program are highlighted below:

Projects A and B

- Designed and fabricated a small gasifier and gas cleanup subsystem suitable for converting preprocessed agricultural residue into producer gas
- Conducted laboratory tests to obtain performance data on gasifier and gas cleanup subsystems
- Designed, fabricated, and tested different engine intake systems for producer gas dual-fuel operation
- Quantified the performance of the selected intake system with respect to maximum diesel fuel replacement and overall engine thermal efficiency
- Conducted laboratory tests to quantify the performance of the integrated gasifier-diesel engine pumpset system
- Completed over 100 hours of field testing with the integrated system
- Evaluated the laboratory and field performance data for the integrated system

Project C

- Conducted short- and long-term laboratory tests on small, wood-based gasifier and dual-fuel diesel engine pumpset systems
- Modified the design of the gasifier and gas cleanup systems

Figure ES-3
Project Implementation Approach

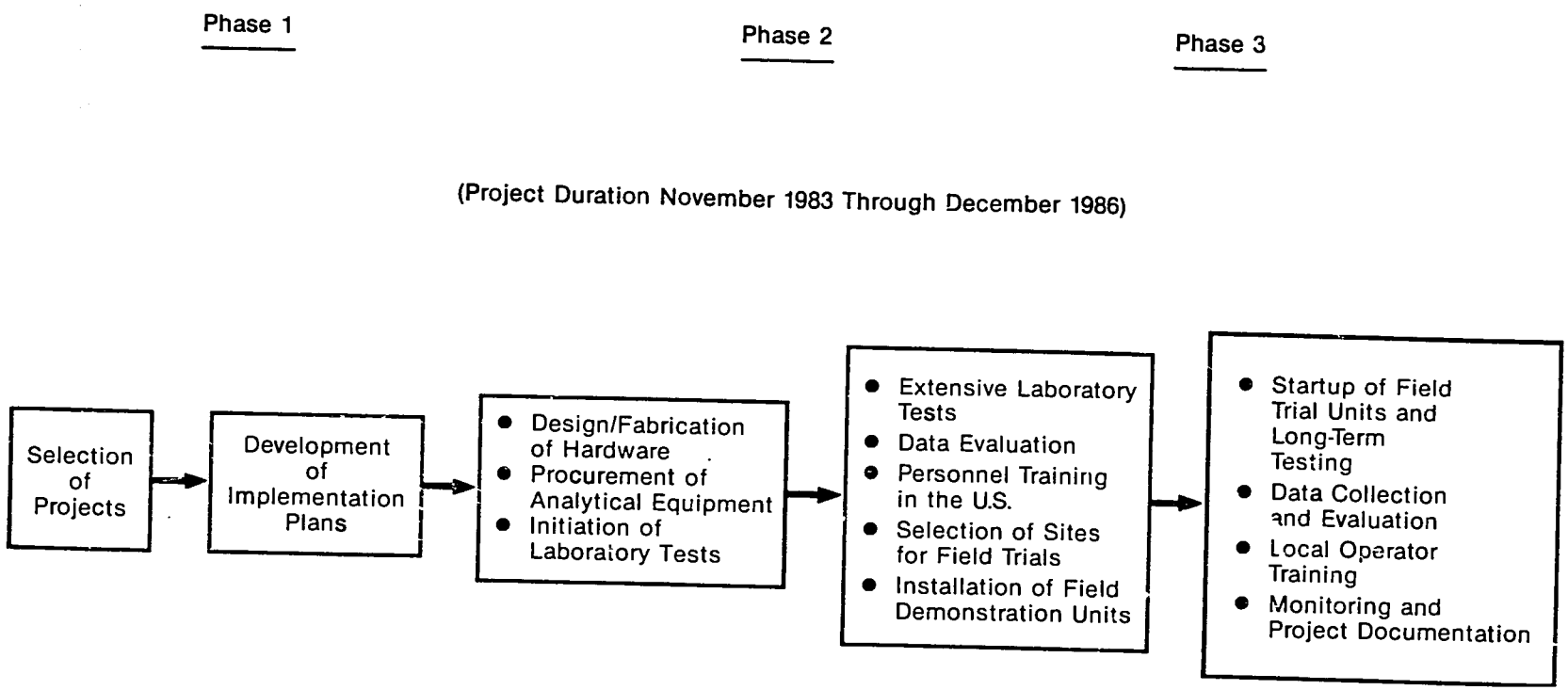

- Fabricated the modified gasifier system and completed extensive laboratory tests

- Accumulated over 1000 hours of combined operating experience and data for the original and modified gasifier-engine pumpset systems

- Evaluated the laboratory and field performance data for both systems

United States Project Team

- Developed a phased implementation strategy for the three projects

- Conducted performance tests and developed operating and maintenance procedures for the U.S. test gasifiers to be used for Projects A and B

- Provided special analytical equipment and instrumentation to facilitate data monitoring and acquisition

- Designed a four week intensive hands-on training program for the selected Indian engineers from the three projects

- Trained six Indian engineers in the operation and maintenance, including data acquisition, of small biomass gasifier-engine systems

- Assisted in the design and implementation of laboratory and field test procedures

- Assisted in the evaluation and documentation of laboratory and field performance data

To highlight the results of laboratory and field testing efforts completed under this collaborative program, comparative performance data for the systems developed under Projects C and A and B are given in Tables ES-1 and ES-2, respectively. As shown in Table ES-1, the G55 model gasifier-engine system developed under Project C exhibited similar laboratory and field performance. The average diesel fuel replacement was about 70 percent, whereas the overall thermal efficiency of the system was about 7.0 percent. The extent of diesel fuel replacement was estimated as percent reduction in diesel fuel consumption when compared with the full load diesel-only operation. The overall system thermal efficiency was estimated by dividing the net energy output in the pumped water with total energy content of the biomass and diesel fuel consumed. The overall thermal efficiency of the system was primarily reduced because of the inefficient centrifugal pumps used in India for lifting irrigation water. The system efficiency based on engine brake power (i.e., torque) was estimated to be about 15 percent.

TABLE ES-1
COMPARATIVE SYSTEM PERFORMANCE: GASIFIER-ENGINE SYSTEM
DEVELOPED UNDER PROJECT C
(G-55 Model)

Performance Parameter	Laboratory	Field
Total time of operation (hrs)	70	400
Average wood consumption (kg/hr)	3.5	3.5
Average diesel consumption (l/hr)	0.33	0.33
Average gas temperature at the gasifier outlet (^{o}C)	200	200
Average gas/air mixture temperature (^{o}C)	35	35
Average total pressure drop across the gas cleanup system (mm H_2O)	63	63
Average pump discharge (l/sec)	15.3	12.5
Total head (m)	9.6	11.86*
Water power (kW)	1.44	1.46*
Engine BHP (kW)	3.2	3.2
Diesel fuel replacement (%)	70	70
Overall thermal efficiency (%)	6.8	7.0

*Calculated values

TABLE ES-2
COMPARATIVE SYSTEM PERFORMANCE: GASIFIER-ENGINE
SYSTEM DEVELOPED UNDER PROJECTS A AND B

Performance Parameter	Laboratory	Field
Total time of operation (hrs)	50	100
Average fuel consumption (kg/hr)	2.5	2.25
Average diesel consumption (l/hr)	0.46	0.444
Average gas temperature at the gasifier outlet (^oC)	350	350
Average gas/air mixture temperature (^oC)	35	35
Average pressure drop across the gasifier system (mm of H_2O)	60	59
Average pump discharge (l/sec)	12.75	13.89
Total head (m)	9.96	11.37*
Water power (kW)	1.245	1.55*
Engine BHP (kW)	2.5	3.1
Diesel fuel replacement (%)	58	63.5
Overall thermal efficiency (%)	5.7	7.40

*Calculated values

The field performance of the system, as measured by the diesel fuel replacement and overall thermal efficiency, developed under Projects A and B (see Table ES-2) was better than that achieved during the laboratory testing. The significant improvement observed in the overall thermal efficiency during the field operations has resulted from the use of a new diesel engine pumpset as opposed to an old set used in the laboratory tests.

The three biomass conversion projects sponsored under the U.S./India Cooperative Alternative Energy Program have successfully achieved their overall goal of developing and field testing small gasifier-engine systems in rural areas of India. The successful implementation of the biomass conversion projects was largely achieved because of the very close working relationship maintained between the Indian and U.S. biomass experts through the entire length of this collaborative program.

The two small gasifier-engine systems developed and tested under this collaborative program proved that technically sound small-scale, simple gas producer (i.e., gasifier) engine systems can be developed. The long-term (over 1000 hours for both models G-50 and G-55 gasifiers) field tests under Project C also established that these systems, after proper training, can be independently operated by local farmers, and that the operation and maintenance of such a system does not require excessive time inputs from the farmer.

For possible wide-scale implementation of this technology, it is recommended that extensive field testing of at least 25 units be carried out to optimize the design in order to:

- Improve overall thermal efficiency
- Improve the design of hardware to provide economical operating life accepted by the operator and manufacturer at the local and industrial levels
- Determine the acceptable range of biomass fuels and their availability
- Determine the socio-economic and political impacts of wide-scale adaptation of this technology at the farm level

The recommended additional work must be conducted in a total systems approach, integrating all the required expertise to quantify the socio-economic benefits and to develop a strategy for wide-scale implementation of this technology in India.

1.0 INTRODUCTION AND BACKGROUND

1.1 Introduction

As part of an overall effort in reducing the dependence on imported oil, the Government of India and the United States Agency for International Development (USAID) initiated the United States/India Cooperative Alternative Energy Program in November 1983 to develop and implement alternative energy technologies in India. This alternative energy program involved development and field testing of coal and biomass conversion technologies that could significantly decrease India's dependence on imported oil. The specific objectives and accomplishments of the coal conversion program are presented elsewhere.[1] This report presents the results of the biomass conversion technology development and field implementation efforts carried out over the last three years in India.

The report contains six sections. Section 1.0 briefly describes the biomass conversion program objectives, project management structure, and United States (U.S.)/India project teams, including their respective projects. It also presents a brief description of the energy situation in India, availability of biomass resource, and rationale for selecting specific biomass conversion projects.

Section 2.0 presents a phased implementation strategy that is designed to accomplish the specific objectives of the selected biomass conversion projects. Section 3.0 outlines the detailed design and development and laboratory testing efforts of the individual projects. Also, preliminary system performance, along with recommended design modifications, are presented in this section. Section 4.0 is devoted to the documentation of field test implementation efforts, including site selection and preparation activities. Field operational experience and system performance data are also documented. Section 5.0 presents the specific contributions made by the U.S. project team in design, development, and field implementation phases of this collaborative program. Finally, Section 6.0 summarizes the overall conclusions relating to the technical performance of the system, based on field operating data. Recommendations regarding any design modifications, wide-scale field-testing, and commercialization strategy are also presented. In addition, supporting data and information generated during the course of this program are contained in the two appendices to this document. A detailed design procedure for the gasifier developed under Project A is given in Appendix A. Gasifier-system operational, maintenance, and safety manuals are contained in Appendix B.

1.1.1 Objectives of Biomass Conversion Program

The specific objectives of this U.S. and India collaborative biomass conversion program were to:

- Develop small gasifiers to produce clean, low-calorific fuel gas (producer gas) from feedstocks such as agricultural waste and wood
- Modify small diesel engines to burn the low-calorific fuel gas
- Test the operation of integrated gasifier-engine systems to lift irrigation water under field operating conditions
- Train local operators for normal operation, trouble shooting, and maintenance of the integrated system
- Facilitate wide-scale use of the small gasifier-engine system in the rural areas of India

To achieve the above objectives, the following three projects were initiated in India:

Project A: Development of a village-level gasifier for irrigation pumps, based on charred agricultural residue

Project B: Utilization of producer gas in small horsepower diesel engines

Project C: Development and field implementation of small, wood-based gasifier-engine systems

Projects A and B were carried out in the Chemical and Mechanical Engineering Departments, respectively, of the Indian Institute of Technology (IIT), New Delhi; Project C was conducted by the Jyoti Solar Energy Institute (JSEI), Vallabh Vidyanagar, Gujarat.

Based on the diverse biomass fuel availability in India, it was decided that Projects A and B would only focus on agricultural waste such as corncobs, peanut hulls, and cotton refuse as the primary feedstocks, whereas Project C would use wood chips as the primary feedstock. The agricultural wastes used under Projects A and B were preprocessed by a locally available pyrolysis process*[2] to improve their characteristics, such as bulk density, heating value, and fixed carbon. Project C used raw wood chips or small blocks.

The technical work of these projects was conducted under the direct supervision of Indian engineers and scientists. In addition, U.S. specialists in biomass gasification were intimately involved in the design, development, and implementation of the three biomass projects.

*The Indian trade name is "Paru Fuel Technology." For more information, see Reference 2.

The respective United States and Indian project teams are listed in Table 1-1.

The biomass conversion program organization is presented below.

1.1.2 Biomass Conversion Program Organization

The management structure for the biomass conversion component of the U.S./India Energy Collaboration Program is given in Figure 1-1. As indicated earlier, this energy collaboration program was jointly sponsored by the USAID and the Department of Non-conventional Energy Sources (DNES), Government of India. The Pittsburgh Energy Technology Center (PETC), under a Participating Agency Service Agreement (PASA), was given the overall management responsibility for implementing this energy collaboration program.

The MITRE Corporation, under a contract with PETC, provided the technical and management support to the biomass conversion component of this U.S./India energy collaboration program. As technical manager, MITRE was responsible for the day-to-day conduct of biomass conversion tasks, developing project plans, coordinating the technical inputs from the U.S. specialists, and monitoring the progress of individual projects. MITRE, in conjunction with the other U.S. specialists, developed technical specifications for special analytical equipment and instruments that were procured from the U.S. to facilitate the data collection tasks. MITRE also coordinated the training of Indian technical personnel at selected U.S. research and development (R&D) institutions.

The U.S. wood/agricultural residue gasification specialists from the University of California at Davis (UCD) and Department of Mechanical Engineering, University of Missouri at Rolla (UMR), served as technical advisors to the three projects. The laboratories and process development centers of these two institutions were used to train selected Indian engineers in the design, operation, and maintenance of biomass gasifier-engine systems.

The Indian project teams were led by individual principal investigators; each team consisted of competent mechanical, chemical, civil engineers, and technicians. The three principal investigators were responsible for the progress of their projects. A phased project implementation strategy, as discussed in a subsequent section, was designed to maximize the exchange of information, sharing of analytical equipment, combined testing of system components, etc. among the three project teams. A close working relationship maintained between the U.S. and Indian project teams was largely responsible for the successful implementation of this U.S./India collaborative biomass conversion program.

TABLE 1-1
RESPECTIVE UNITED STATES AND INDIAN PROJECT TEAMS
(BIOMASS CONVERSION)

United States Team	Indian Team
Professor John Goss Technical Adivsor University of California Davis, California, USA	Dr. P.D. Grover Principal Investigator Department of Chemical Engineering Indian Institute of Technology New Delhi, India
Professor Virgil Flanigan Technical Advisor University of Missouri Rolla, Missouri, USA	Professor H.B. Mathur Principal Investigator Department of Mechanical Engineering Indian Institute of Technology New Delhi, India
Mr. Abu Talib Project Manager The MITRE Corporation McLean, Virginia, USA	Professor A.C. Pandya Jyoti Solar Energy Institute Vallabh Vidyanagar Gujarat, India

Figure 1-1
The U.S./India Biomass Conversion Program Organization

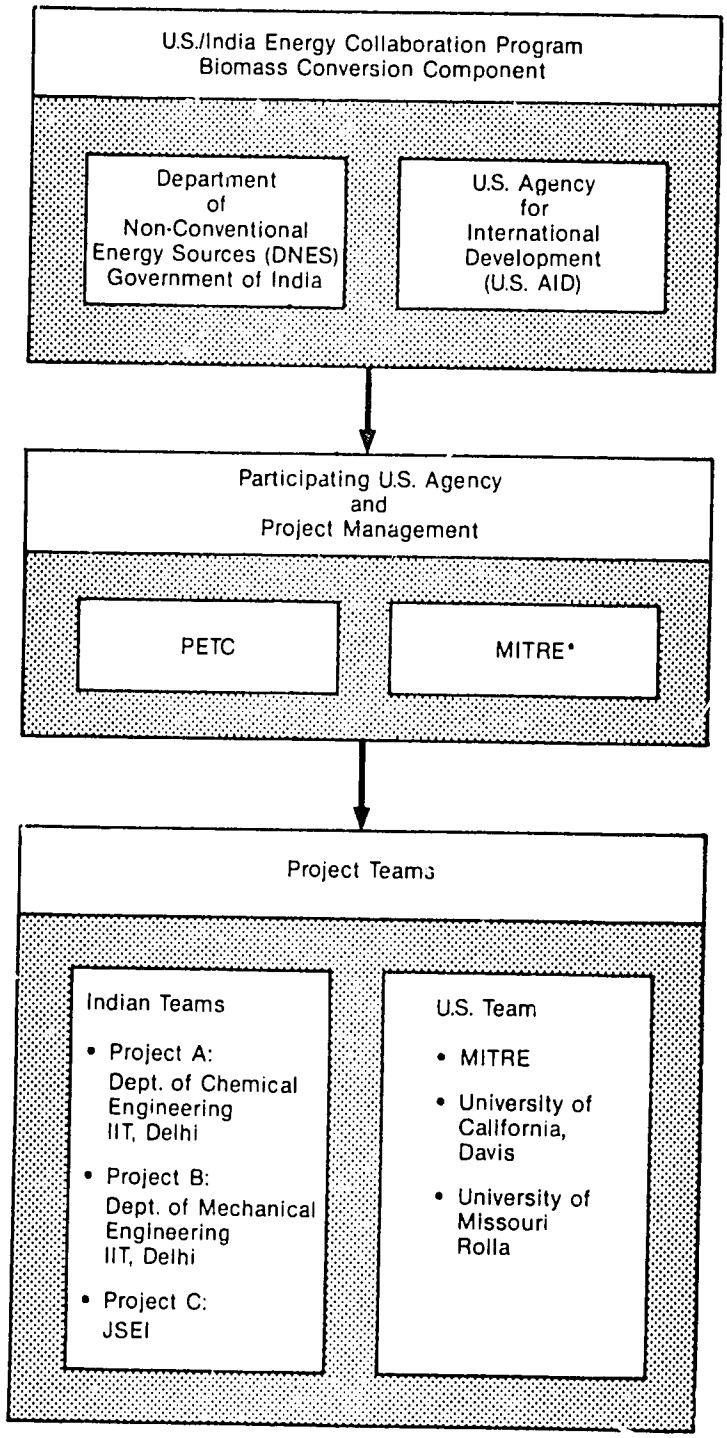

*Dual Role

5

1.2 Background

The sharp rise in oil prices has resulted in rapid adjustment of energy consumption practices and serious consideration for alternate fuels in the highly developed, industrialized countries, as well as in many developing countries. The increased costs of imported oil, however, have created especially serious problems for a majority of the developing countries. For example, their economies were overwhelmed by the costs of oil imports to such an extent that most are now deeply in debt to the oil-exporting countries and/or international lending institutions, and investment in industrialization and agricultural development has been severely curtailed.

India is one such developing country where the oil imports are expected to grow from 14 million metric tons (102 million barrels) at the present time to about 40 million metric tons (292 million barrels) by the year 2000.[3] The corresponding oil payments will increase from about two billion U.S. dollars at present to about ten billion U.S. dollars by the turn of the century. This enormous drain on the foreign exchange could be devastating to the Indian economy, and thus retard the ongoing industrialization process. India, therefore, is taking effective measures to reduce her dependence on petroleum imports in order to maintain her economic progress. The U.S./India Cooperative Alternative Energy Program is one such measure that paves the way for the development of alternative energy sources in India.

The biomass conversion component of this U.S./India energy collaboration project can play a very significant role in alleviating the Indian dependence on imported oil. India is predominantly an agricultural country that annually produces approximately 200 million metric tons of agricultural residue, such as wheat straw, rice hulls, and nut shells.[2] In addition, several states, particularly the state of Gujarat, have started active reforestation projects. It is expected that these man-made forests can provide additional sources of biomass fuel. The agriculture sector in India is also a significant consumer of imported oil. For example, it is estimated that there are about 2.5 million diesel-oil-powered irrigation pumps currently in use in India.[3] Based on the availability of biomass resources and on their potential for substitution of significant imported oil, the agriculture sector was considered the most viable candidate for application of biomass conversion technology. Thus, the initial technology development efforts are focused to address the energy needs of this sector.

Small producer-gas generators (or air-blown gasifiers) hold great potential in fueling the dispersed diesel irrigation pumps currently in use on a multitude of farms in India. The most common size of these diesel-engine-operated pumps falls between 5 and 30 horsepower (hp). Because of this tremendous rural market potential, the selected biomass conversion collaborative projects primarily focus on developing and field testing small (i.e., about 5 hp) gasifier engine systems.

2.0 PROJECT IMPLEMENTATION STRATEGY

A phased implementation strategy was developed to facilitate the design and development, laboratory and field testing, and personnel training components of these three projects. The projects were carried out in three phases, with each phase approximately twelve months long. The breakdown of individual project efforts under each of the project phases is given in Table 2-1. During phase 1, Projects A and B were scheduled to complete design and development and preliminary equipment testing tasks. Because Project C had already completed design and development and gasifier fabrication tasks under a separate project* during phase 1, it was scheduled to carry out extensive laboratory tests and work in support of a field demonstration plant. During phase 2, Projects A and B together were scheduled to carry out tasks pertaining to the fabrication and short-term testing of field trial gasifier-engine systems. Project C, on the other hand, was scheduled to initiate the field trials under phase 2. Phase 3 was devoted to carrying out tasks relating to long-term field testing, operator training, and documentation. During this phase, the field demonstration units were monitored to collect data for evaluating the technical performance of small biomass gasifier engine systems under actual field conditions. A large portion of planned documentation under phase 3 was devoted to the preparation of the final project report. The report was designed to contain the following:

- Description of design and development, field and laboratory testing efforts
- A comprehensive set of design, operational, and maintenance procedures for a small biomass gasifier-engine system
- Detailed environmental and safety procedures

It is anticipated that this final report would facilitate wide-scale field testing and eventual commercialization of small gasifier-engine systems in India.

Phase 1 of these projects was initated during mid-December 1983. However, because the funds required to carry out these projects were not released until April 1984, the actual work did not start until near the end of that month. Detailed breakdown of the scope of work to be performed under each phase was given in the original project plans.[4] The design and development and field testing efforts, as completed before the end of December 1986, are described in the following sections.

---

*A small gasifier development project funded by the Ford Foundation. For more information, please see Reference 6.

TABLE 2-1
BREAKDOWN OF INDIVIDUAL PROJECT EFFORTS UNDER EACH PHASE

	Phase 1	Phase 2	Phase 3
Project A	• Perform design and fabrication • Procure analytical equipment • Set up test facility • Conduct initial gasifier tests	• Continue gasifier tests • Initiate combined gasifier-engine tests • Select sites for field trials • Conduct long-term, integrated tests • Develop startup and operating procedures	• Install field demonstration plant • Start up plant and perform short-term tests • Perform long-term tests • Initiate personnel training • Monitor and document project
Project B	• Develop engine modifications for IC engines • Modify test engines • Conduct engine tests on producer gas	All Project B efforts in phases 2 and 3 are the same as those in Project A	
Project C	• Perform extensive laboratory testing • Select sites for field trials • Develop fuel specifications	• Install field demonstration plant • Start up demonstration plant • Short- and long-term tests	• Continue project monitoring and personnel • Document project results

3.0 DESIGN AND DEVELOPMENT EFFORTS

The design and development efforts of the three projects are highlighted in this section. The first part of this section focuses on the design development efforts of Project C. Following the discussions of Project C efforts, the individual and combined development efforts of Projects A and B are presented.

3.1 Design and Development Efforts of Project C

As indicated earlier, the main objective of Project C was to develop a reliable small wood gasifier cleanup system capable of running a 3.7 kilowatt (kW) diesel engine pumpset. A schematic diagram of such a system is given Figure 3-1. The system basically consists of a downdraft gasifier, a gas cleanup subsystem and an engine pumpset. The major efforts under Project C focused on design of the gasifier which is capable of converting raw wood fuel into a combustible fuel gas (or producer gas). The following section presents functional characteristics, design procedures, and laboratory test results of the system components.

3.1.1 Functional Characteristics

3.1.1.1 Gasifier. The function of the gasifier is to convert solid carbonaceous fuel, such as wood, into combustible gases (mainly CO and H_2) by combination of oxidation, pyrolysis, and reduction reactions. The major chemical reactions taking place in the gasifier are:

(1) $C + O_2 \rightarrow CO_2$

(2) $C + 1/2O_2 \rightarrow CO$

(3) $C + H_2O \rightarrow CO + H_2$

(4) $CO_2 + C \rightarrow 2CO$

Reactions (1) and (2) are exothermic and provide the required heat for the endothermic reduction reactions (3) and (4).

In order to effectively carry out these reactions, the gasifier should be designed in such a way that the solid fuel passes through the following zones: (a) drying, (b) pyrolysis, (c) combustion, and (d) reduction. Typical conversion zones for a downdraft gasifier are given in Figure 3-2.

The fuel passes through the drying zone which is generally around 150°C. Here the moisture is driven off and no chemical breakdown of the fuel occurs. The fuel then passes through the pyrolysis zone where, in the absence of air, thermal breakdown of wood structure takes place,

Figure 3-1
JSEI Gasifier System

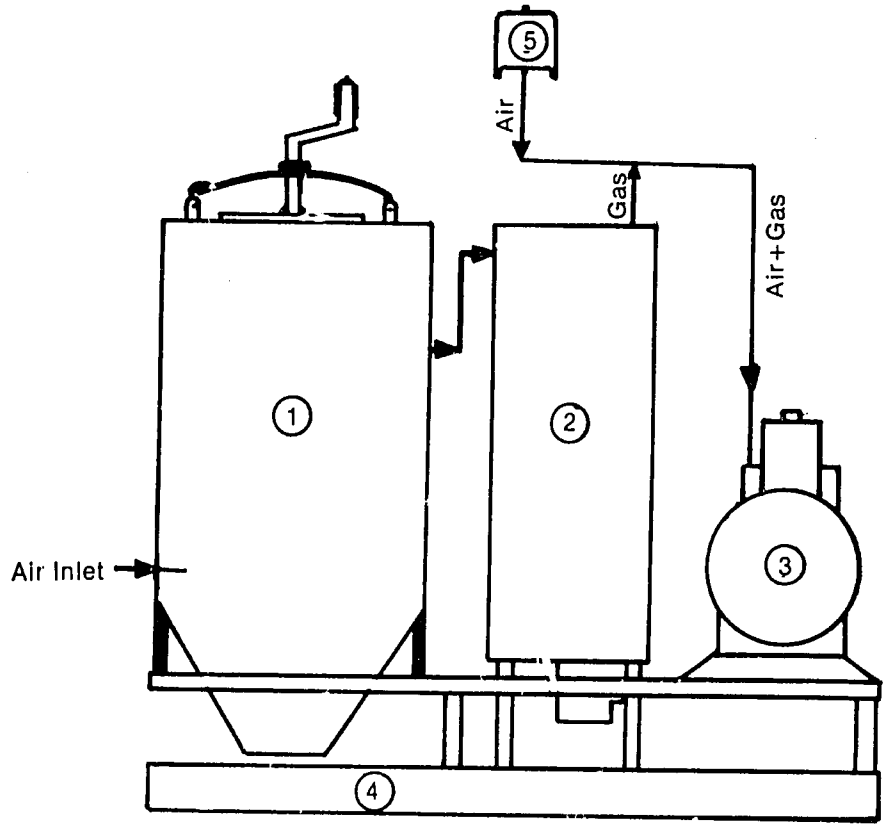

1 Gasifier
2 Gas Cleanup Unit
3 Engine Pump Set
4 Frame
5 Air Filter

Figure 3-2
Typical Reaction Zones in a Downdraft Gasifier

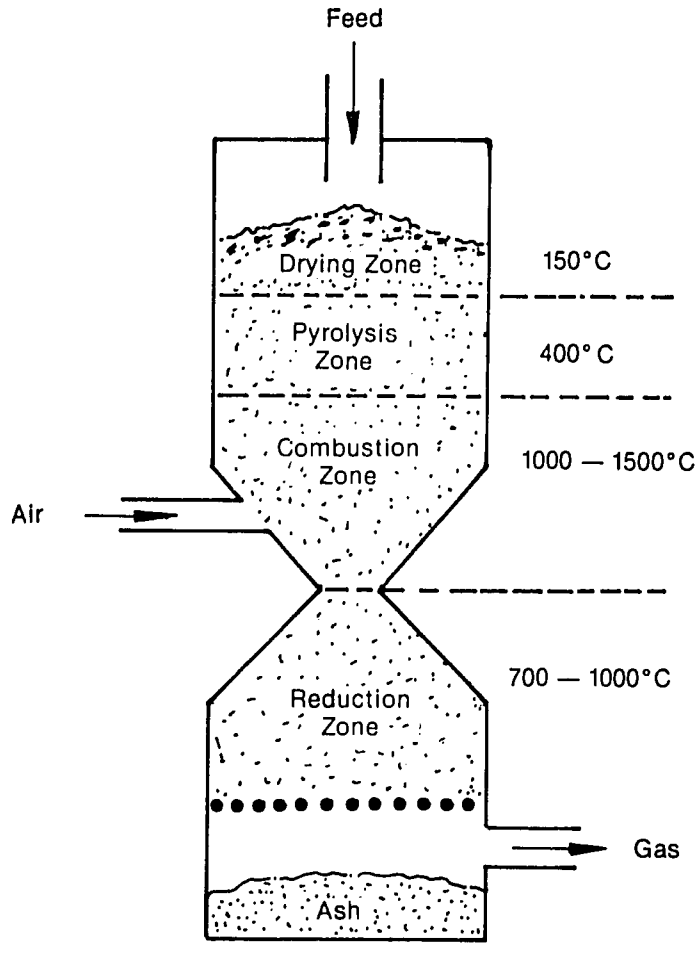

resulting in the formation of methanol, acetic acid, and heavy hydrocarbons, including tar. The solid material remaining after pyrolysis is primarily fixed carbon in the form of charcoal. The temperature in the pyrolysis zone is about 400°C. The pyrolysis material along with the gases and the organic vapors produced passes through the combustion zone. Here, main combustion reactions (1) and (2) take place and the heat released is used for sustaining both the pyrolysis and the reduction reactions. The temperature in this zone ranges from 1000-1500°C. A set of tuyeres is provided for the controlled introduction of air into the combustion zone.

In order to crack the organic liquids and tar formed in the pyrolysis zone, the vapors are forced to pass through a narrow area (throat or hearth) directly underneath the combustion zone. The purpose of this constriction is to increase the heat intensity, i.e., amount of heat per unit area to effect the cracking process. The gases thus formed are drawn into the reduction zone where reactions (3) and (4) occur. The mixture of final product gases (i.e., producer gas) is drawn into the cleanup system. Typical composition of the producer gas from wood is given in Table 3-1.

TABLE 3-1
COMPOSITION OF PRODUCER GAS FROM WOOD[5]

Gas	% (by volume)
Carbon monoxide (CO)	18-25
Hydrogen (H_2)	13-15
Methane (CH_4)	3-5
Heavy hydrocarbons	0.2-0.4
Carbon dioxide (CO_2)	5-10
Nitrogen (N_2)	45-54
Water vapour (H_2O)	10-15

The major design considerations for a downdraft gasifier are:

- Proper sizing of the throat area to maintain material flow and high temperatures

- Proper sizing of the tuyeres to effect partial combustion
- Provision for ash removal
- Provision for easy solid fuel flow with proper holdup capacity

3.1.1.2 Gas Cleanup System. The raw gases coming out of the downdraft gasifier are generally around 250°C and contain particulate matter (mainly soot and ash), organic vapors and residual tars. Hot gases severely decrease the volumetric efficiency of the internal combustion (IC) engine whereas particulate matter and tars cause excessive engine wear, carbon deposits, pitting of the valve seats, and in extreme cases, seizing of the engine. Therefore, the gas has to be cooled and cleaned before being introduced into the engine. These two functions are performed by the cleanup system.

The design, development and testing of the system components are presented in the following section.

3.1.2 Design, Development and Testing

Prior to the starting of the U.S./India Cooperative Alternative Energy Program, JSEI had developed a gasifier system G-50* Model based on biomass gasifier designs used in Sweden during the Second World War.[6] Under this program JSEI completed extensive laboratory testing of the system and modified the system for ease of operation and maintenance. The design features and laboratory operating experience, along with pertinent modification, are discussed in the following sections.

3.1.2.1 Original Gasifier Design. The original gasifier design developed by JSEI is presented in Figure 3-3. This was a downdraft gasifier (i.e., the wood fuel and gases move in the same direction) with a cylindrical fuel hopper 500 mm in diameter and about 600 mm high. The capacity of the fuel hopper was about 25 kg of wood blocks or chips, containing less than 25 percent moisture (wet weight basis). The combustion and reduction zones were conical in construction. The hearth, or throat (the smallest cross-sectional area between the combustion and reduction zones), diameter was about 50 mm. Air entered the combustion zone through six tuyeres about 10 mm in diameter. Pre-heating of air was accomplished by heat exchange with the product gas. During the normal operation of the gasifier system, the temperatures attained in the combustion zone ranged from 1,100 to 1,300°C. The combustion and reduction zones, and air tuyeres were made of stainless steel (SS310). The rest of the gasifier was made of mild steel.

*G-50 stands for 50 mm throat diameter.

Figure 3-3
Original JSEI Gasifier Design (G-50 Model)

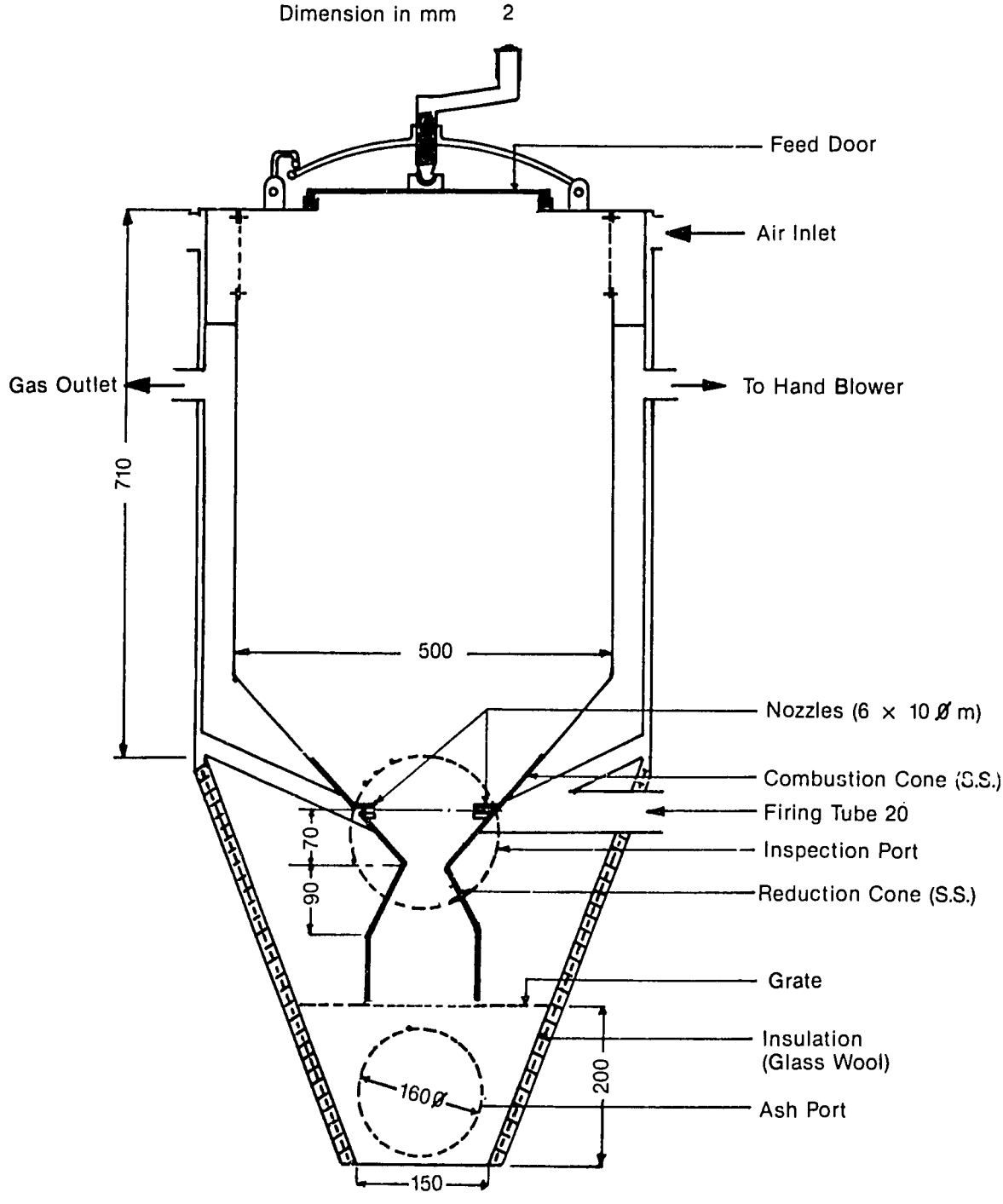

An ash pit was provided below the reduction zone. The conical section of the gasifier was insulated with glass wool to minimize the hea losses. The fuel gases passed through the throat section where, in the presence of intense heat, the higher hydrocarbons and oxygenates present in the gas cracked to yield lower molecular weight gases. Below the throat area, the CO_2 present in the gases was reduced by the carbon in the charcoal to form additional carbon monoxide.

The raw fuel gases (or producer gas) from the gasifier were then passed through a cleanup system which was comprised of a water scrubber and a dry filter as shown in Figure 3-4. Water scrubbing, besides removing suspended particles and condensable vapors, cooled the gas to prevent derating of the engine. Coke was used as a bed material and the water for scrubbing was supplied by the pumpset. Waste cotton was used for drying the gas.

The dual-fuel engine used in the JSEI original design was a single cylinder 4-stroke water cooled diesel engine with a rated power of 3.7 kW at 1500 revolutions per minute (rpm). The inlet manifold on the existing engine was modified. The original air filter was removed, and a direct connection was made between the filter outlet and a small chamber attached to the engine manifold. A small air valve was provided on the chamber to provide the engine with extra air required during the startup period. To achieve proper air-gas mixing, a venturi type mixing device was designed and used. This venturi air-gas mixing device is shown in Figure 3-5.[6] The device was fitted at the gas outlet from the gas cleanup system. Except for the initial setting of the governor lever, no other modifications were made on the diesel engine. This adjustment was made so that the governor acted as a regulator in the dual-fuel operation and to keep the rpm constant. The technical specifications of the G-50 gasifier engine system are given in Table 3-2.

The gasifier/gas cleanup system, along with the modified diesel engine driven pump, is shown in Figure 3-6. This system was operated for more than 300 hours, during which three different types of wood fuels were tested. The proximate analysis and heating value for these three types of wood fuels are given in Table 3-3. The average wood particle size was less than 5 cm. The average diesel fuel replacement achieved during the dual-fuel operation on the producer gas produced from these fuels is given in Table 3-4. The diesel fuel replacement ranged from 67 to about 82 percent. The average wood fuel consumption was about 2.5 kg/hr. A typical diesel fuel replacement profile during a test run is given in Figure 3-7. During a typical 5-hour run, the diesel fuel replacement started with a value of about 40 percent, and as the run progressed, gradually reached about the 80 percent fuel replacement level.

The laboratory testing of the original JSEI gasifier-engine system was not adequately monitored because of lack of instruments and analyical

Figure 3-4
JSEI Gas Cleanup Unit

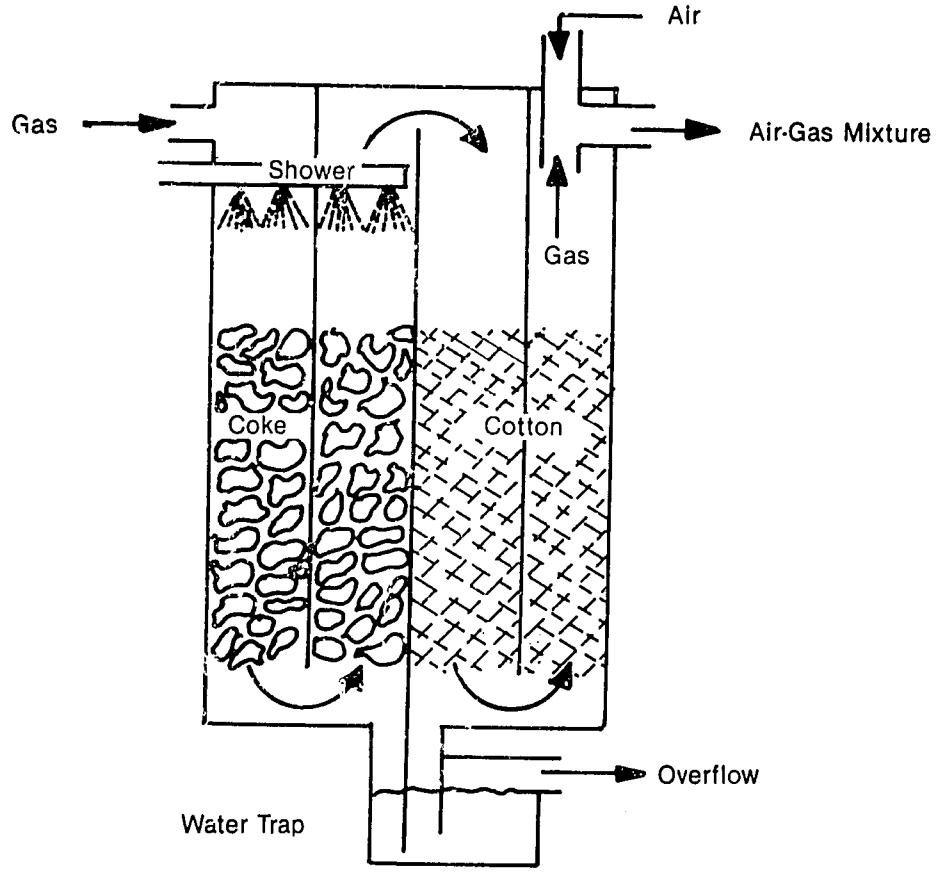

Venturi Air-Gas Mixing Device

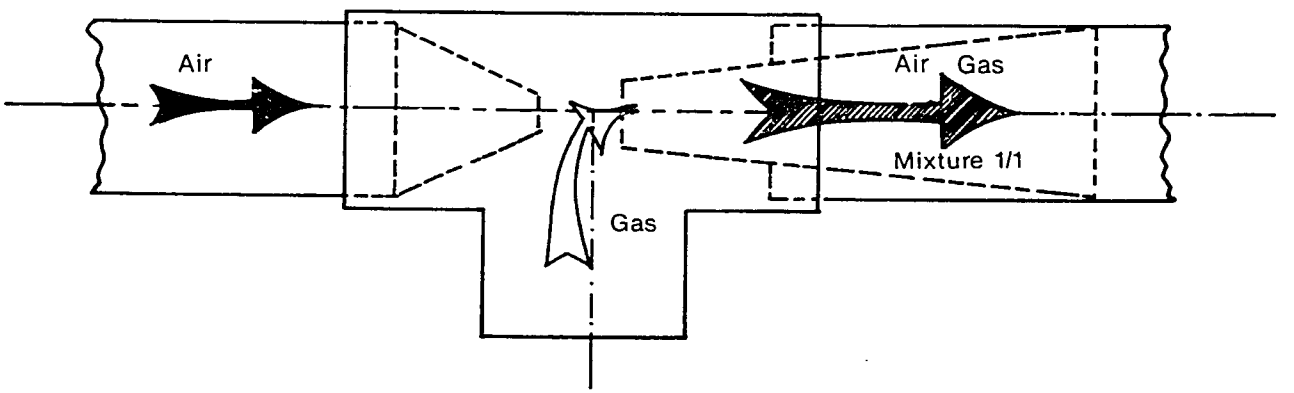

Source: Reference 6

TABLE 3-2
TECHNICAL SPECIFICATIONS FOR G-50 GASIFIER-ENGINE SYSTEM

Gasifier (3.7 kW)		
a)	Type	Downdraft
b)	Hearth diameter, mm	50
c)	Material of construction	Mild Steel, SS 310
d)	Number of air nozzles	6
e)	Flow rate, Nm^3/hr	12
f)	Hopper Capacity, kg	25
g)	Combustion zone temperature ^oC	1100
h)	Outlet gas temperature ^oC	125
Water Scrubber		
a)	Type	Packed bed
b)	Material of construction	Mild Steel
c)	Bed material	Coke
d)	Outlet gas temperature ^oC	Ambient
Dry Filter		
a)	Type	Packed bed
b)	Material of construction	Mild Steel
c)	Filter medium	Cotton waste
Engine		
a)	Make	Kirloskar TV-1
b)	Type	Single cylinder, 4 stroke Water cooled diesel engine
c)	Rated power kW	3.7
d)	RPM	1500
e)	Diesel consumption on full load, l/hr	1.1
Pump		
a)	Make	Kirloskar NW2H
b)	Type	Centrifugal
c)	Discharge l/s	17
d)	RPM	1500
e)	Total head, m	12

NOTE: Nm^3 is normal cubic meter of gas measured at 0^oC and 1 atmospheric pressure.

Figure 3-6
Photograph of JSEI Gasifier-Engine System (G-50 Model)

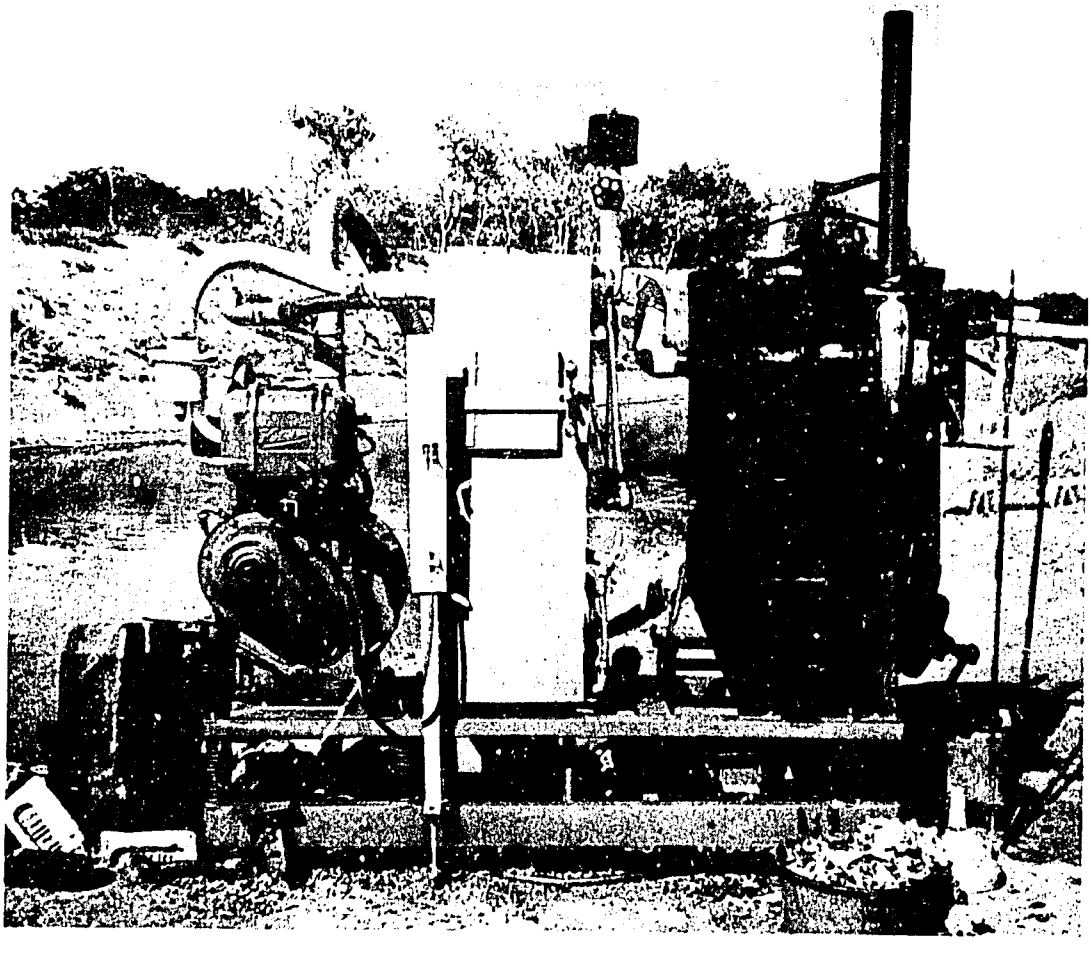

19

TABLE 3-3
PROXIMATE ANALYSIS AND HEATING VALUE OF THE WOOD FUELS TESTED

Type	Moisture Content %	Volatile Matter %	Ash Content %	Fixed Carbon %	Calorific Value MJ/kg (Dry Basis)
Babul	8.00	84.38	0.43	7.20	19.6
Eucalyptus	3.81	73.82	5.54	16.13	22.0
Teak	6.60	82.61	2.57	8.22	20.4

TABLE 3-4
EXTENT OF FUEL REPLACEMENT ON DIFFERENT WOOD FUELS

Type	Duration of Test Hours (Not Continuous)	Average Consumption of Wood, kg/hr	Average Replacement Percent
Babul	73	2.6	81.8*
Eucalyptus	14	3.0	68.0
Teak	256	2.3	67.6

*However, recent tests with babul wood gave a replacement of only 60-68%.

Figure 3-7
Average Diesel Fuel Replacement Over a Period of Operation

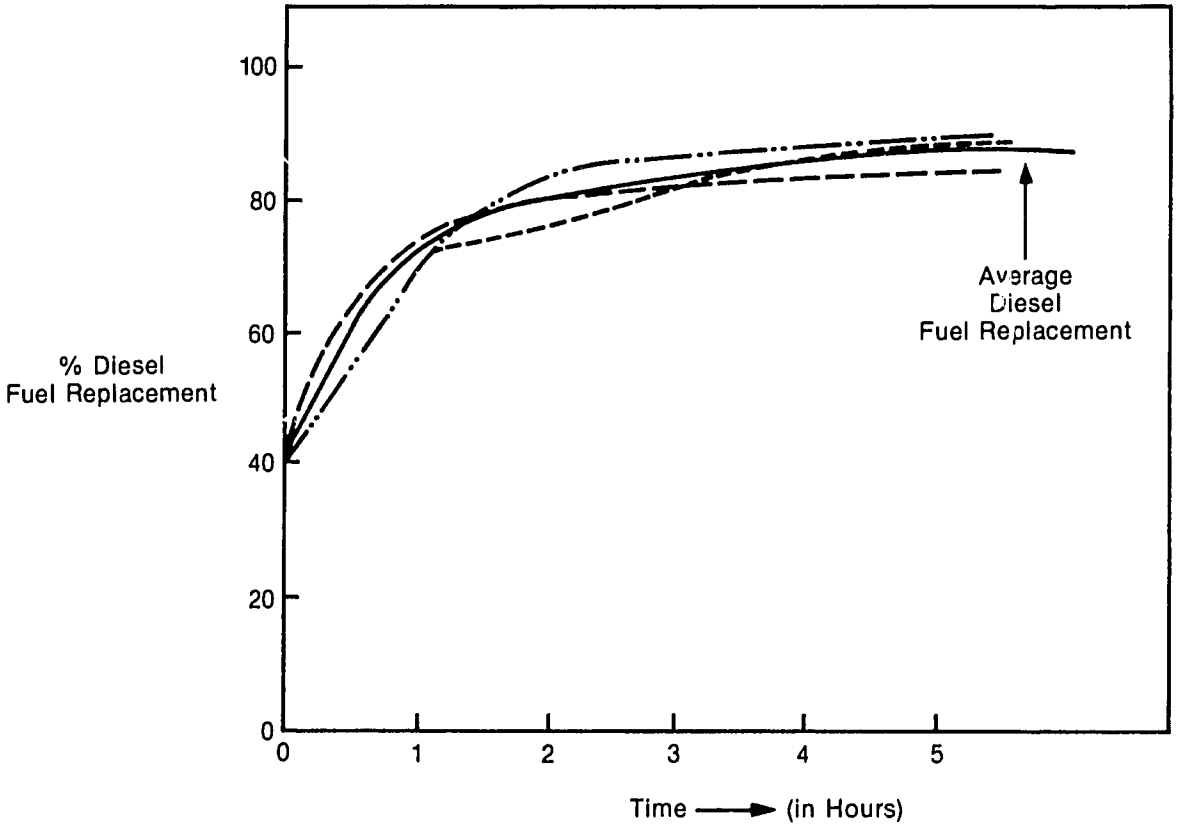

equipment. Therefore, the reported system performance was based only on monitoring of wood and diesel fuel consumptions.

3.1.2.2 Design Modifications. Even though the gasifier system operated satisfactorily, certain operational and maintenance drawbacks were observed. For example, it was difficult to do any inside maintenance, like cleaning of air nozzles, as the gasifier was made in one part. Also, because of the air preheating arrangement, the fabrication became complicated as it required a dual shell construction. Further developmental work was aimed at rectifying the above problems and to reduce the cost of the gasifier.

Accordingly, another gasifier with a 55 mm hearth diameter, as shown in Figure 3-8, was fabricated. It had a central air inlet pipe with 4 nozzles of 11 mm diameter. Locating the air inlet pipe centrally in the gasifier facilitated maintenance. The gasifier had a rotating grate for easy ash removal. Shaking arrangement was provided at the bottom of the gasifier to remove choking at the throat. This was a simple hand operated arrangement. There was no pre-heating of air. This reduced the fabrication and maintenance cost, as no dual shell was necessary. For ease of fabrication and maintenance, the gasifier was made in three parts, i.e., hopper, combustion and reduction zone, and ash pit.

In addition to the modifications made in the gasifier, certain modifications were made in the gas cleanup system. A venturi scrubber, with a throat diameter of 20 mm and with a water spray above the throat, was included in the system. Further, coke, which was used as bed material in the water scrubber of the earlier system, was replaced by smooth pebbles as they possess a self-cleaning property. The gas, after being scrubbed with water, was made to pass through "perforated caps" provided on a plate at the top of the scrubber. A "security filter," consisting of densely packed cotton waste, was included in the system just before the gas was mixed with air to ensure that the gas entering the engine was well filtered. Figure 3-9 shows the schematic diagram of the modified system.

A simple T-connection was found to be effective for air-gas mixing. Hence, the venturi type mixing device used in the earlier system was replaced by a T-connection. This, besides reducing the pressure drop, helped to reduce the cost of the system. The technical specifications of the system are given in Table 3-5.

While this unit was being fabricated, the original JSEI gasifier engine system was moved to the demonstration site. The details of field operation are presented in Section 4.0.

The modified unit was tested in the laboratory for over 70 hours before it replaced the original JSEI unit in the field. The performance data obtained during an instrumented segment of the laboratory test are given in Figures 3-10 and 3-11.

Figure 3-8
Modified JSEI Gasifier Design (G-55 Model)

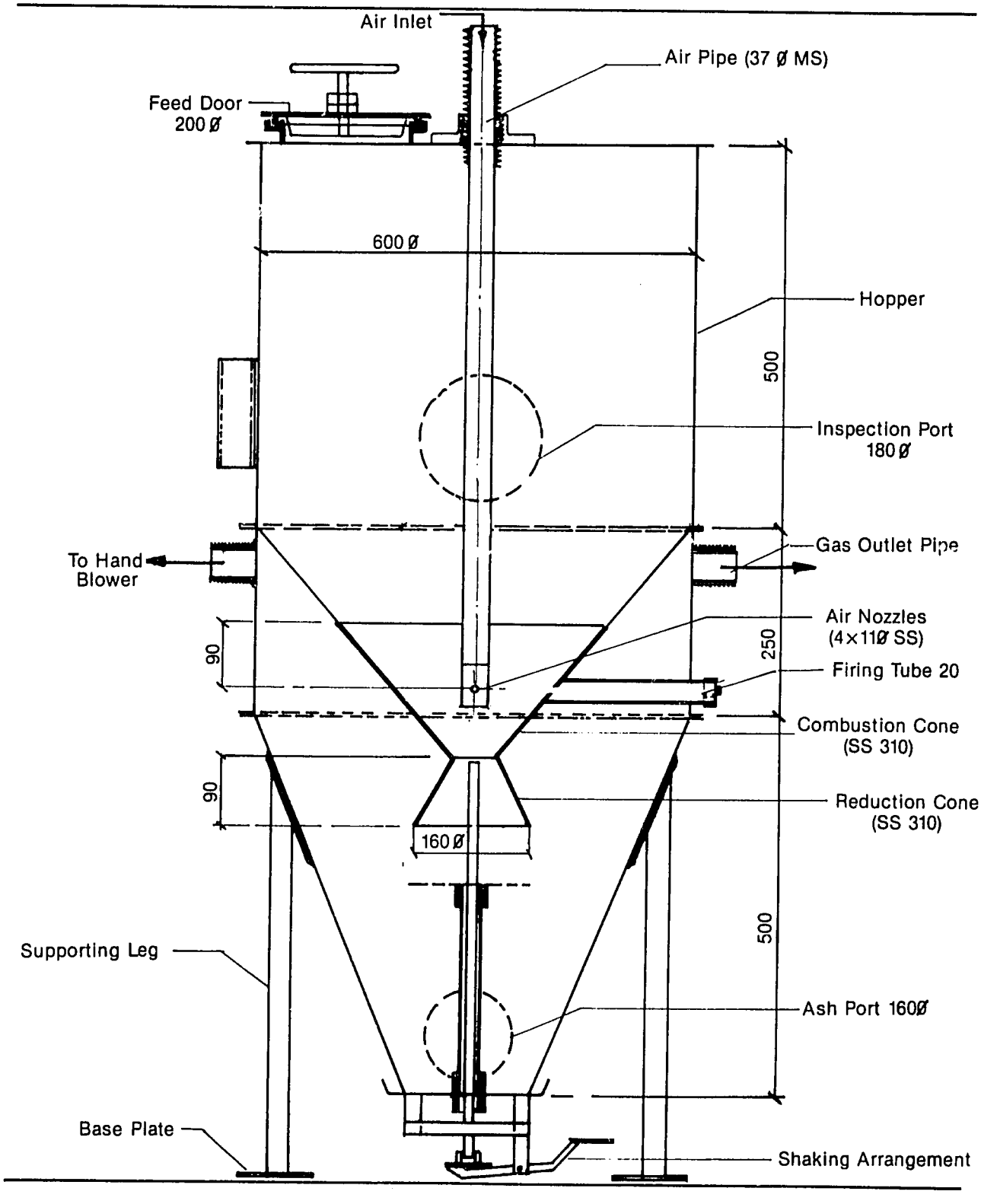

Figure 3-9

Schematic Diagram of Modified Gasifier-Engine System

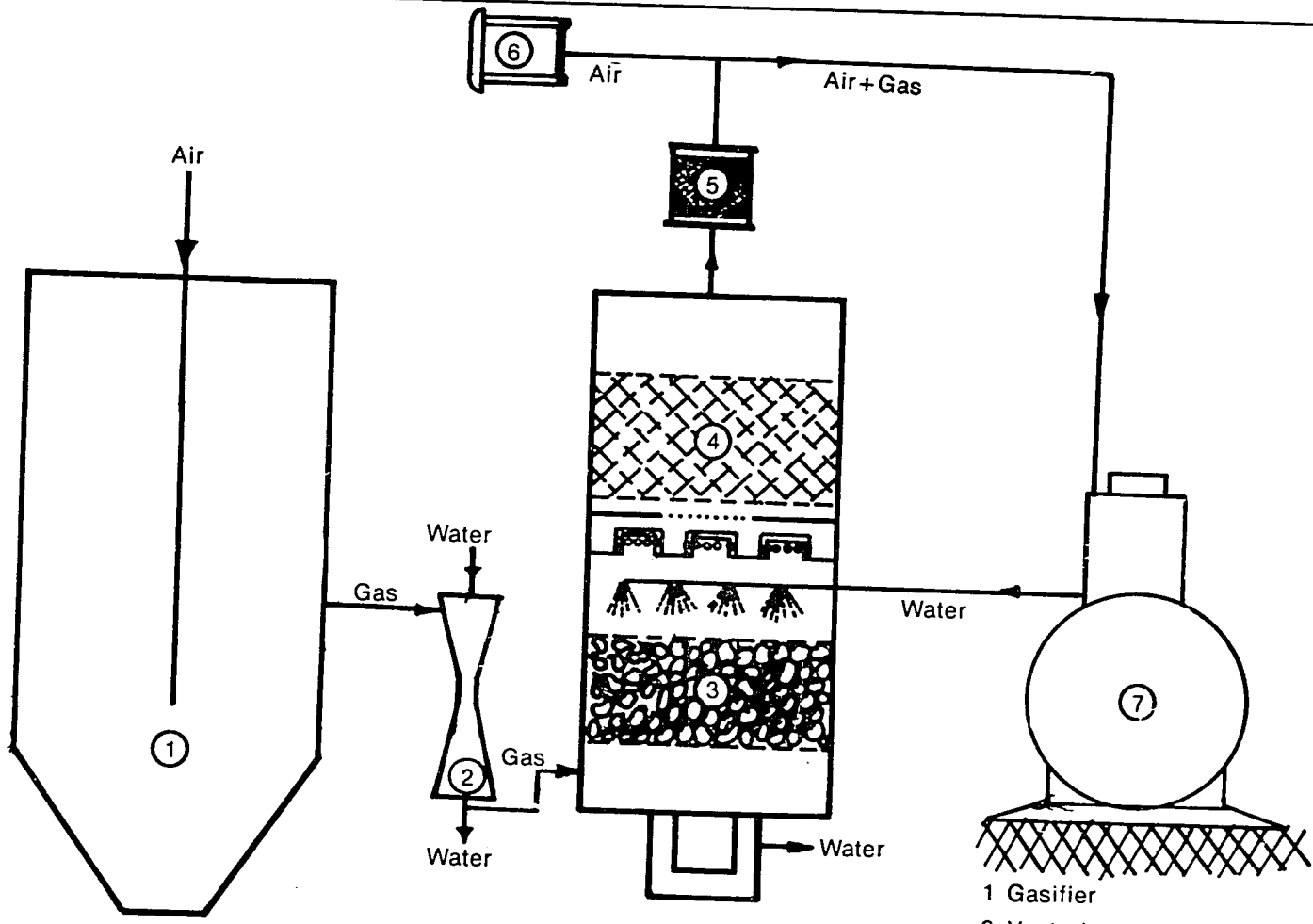

1 Gasifier
2 Venturi
3 Water Scrubber (Pebbles)
4 Dry Filter (Cotton Wash)
5 Security Filter
6 Air Filter
7 Engine Pumpset

TABLE 3-5
SYSTEM SPECIFICATIONS OF THE G-55 GASIFIER UNIT

Gasifier		
a)	Type	Downdraft
b)	Material of construction	Generally Mild Steel except for hearth and air nozzles where SS-310 is used
c)	Rated capacity, Nm^3/h	12
d)	Air nozzles	6
e)	Hopper capacity, kg	30
f)	Combustion zone temperature ^oC	1100
g)	Outlet gas temperature ^oC	200
Gas Cleanup Unit		
a)	Venturi scrubber	Throat diameter 20 mm, direct contact co-current water jet
b)	Filter media	Pebbles, cotton waste
c)	Scrubbing water flow, l/h	600
d)	Pressure drop, mm of water	45
e)	Gas temperature after cooling	Ambient
f)	Tar and soot in gas	Negligible
Engine-Pumpset		
Engine		
a)	Make	Field Marshal, GF-1
b)	Type	Single cylinder, 4 stroke water cooled, diesel engine
c)	Rate power, kW	3.7
d)	RPM	1500
e)	Diesel consumption, l/h	1.2
Pump		
a)	Meke and type	New Vijay Industries, Ltd., Centrifugal
b)	Discharge, l/s	15
c)	RPM	1500
d)	Total head, m	15
e)	Efficiency, %	65

25

Figure 3-10
Laboratory Performance of Gasifier-Engine System (G-55 Model)

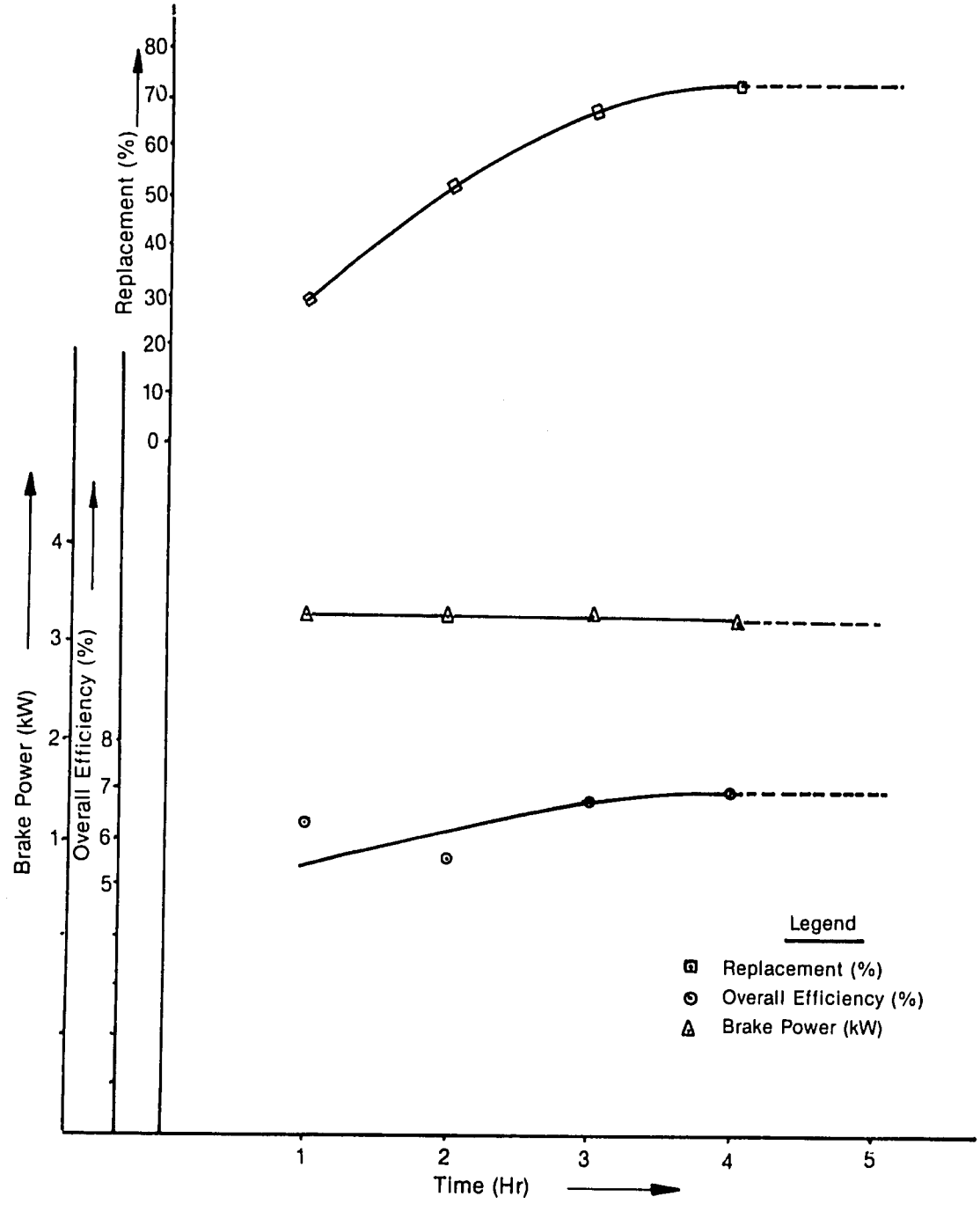

Figure 3-11
Part Load Performance of Gasifier-Engine System (G-55 Model)

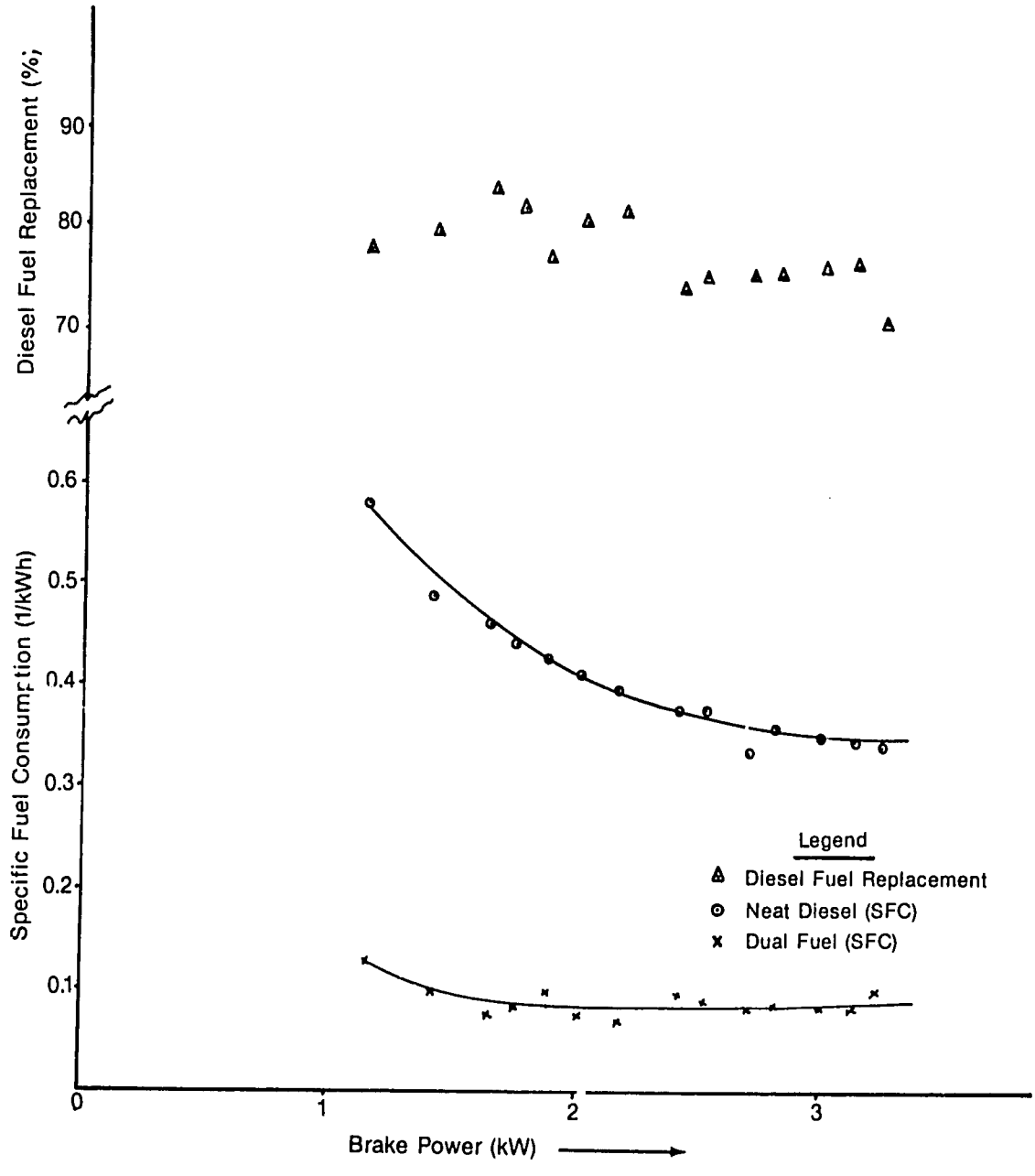

22

As shown in Figure 3-10, the diesel fuel replacement over a typical operating period increased from about 30 percent to a value of about 70 percent, and it more or less stayed at the latter value during the rest of the operating period. The engine brake power (kW) as measured by the torque transducer, stayed around 3.2 kW over the test run. The overall thermal efficiency of the system (i.e., energy in the water divided by the energy in the wood and diesel fuels) ranged from 6.0 to 7.0 percent over the test run. In order to obtain part-load performance of the G-55 gasifier-engine system, a test run was conducted where the system was operated at different loads (i.e., different water discharge rates). The performance obtained during this test is presented in Figure 3-11.

The diesel fuel replacement during the variable load test ranged from about 70 to 84 percent. No specific trend was observed, except that the higher replacement of 84 percent was achieved around 50 percent load. The corresponding specific diesel fuel consumption was about 0.075 liters per kilowatt hour (kWh).

3.2 Design and Development Efforts of Project A

This section deals with the efforts made by the Project A team in developing a suitable gasifier unit for operating a 5 hp IC engine pump set in a dual-fuel mode.

3.2.1 Choice of Fuel

As indicated earlier, it was jointly agreed by the U.S. and Indian project team members that Project A would only focus on the utilization of agricultural wastes such as corn cobs, peanut hulks, cotton refuse, etc. as the primary gasification feedstocks.

Charring the agricultural wastes (biomass) and briquetting of the resulting char provided an ideal fuel for gasification in small gasifiers. Charred biomass has significantly low volatiles which are normally responsible for the production of tar and other impurities in the producer gas. Charring and briquetting thus makes any biomass waste into a useable fuel which otherwise would have been unsuitable for gasification in a downdraft gasifier.

Among the many biomass materials available in India, corn cob, ground nut shell, pine needles, and cotton stalk were selected for gasification due to their low ash content. These materials were charred by using a pyrolysis process developed by the Chemical Engineering Department of IIT, Delhi.[2] Under the U.S./India program, Projct A, however, had concentrated on the utilization of corn cob char because it did not require briquetting for use in a gasifier.

3.2.2 The Gasification System

The following subsystems are required in order to produce a clean producer gas at ambient conditions for running an IC engine:

- Biomass gasifier
- Producer gas cleaning and cooling unit
- Filter surge tank
- Blower

A schematic sketch of the system is exhibited in Figure 3-12.

The biomass fuel is reacted in the gasifier to generate producer gas. A blower (hand operated) is required to initiate the combustion of fuel in the gasifier. Details of a downdraft gasifier operation are presented in Section 3.1. The producer gas generated at high temperatures is cleaned as well as cooled in the gas cleanup system . The surge tank is employed to dampen the effect of fluctuations in the gas production rate so that smooth running of the engine is maintained; this tank is also used for removing fine particulate impurities and moisture.

3.2.3 Gasifier and Gas Cleanup System Development

3.2.3.1 Experience with Missouri Gasifier. While the efforts were going on for the design and development of a gasifier (G-60), discussed in the next section, the Project A team initiated testing trials on the U.S. test gasifier. This gasifier was supplied by the U.S. team, so as to gain hands-on experience with gasifier operation. The brief test experience with this gasifier is summarized below. A description of U.S. test gasifier is given in Section 5.0.

Test Details:

• Fuels used:	saw dust, corn cob, corn cob char, charcoal, wood chips, etc.
• Period of operation:	1/2 to 3 hours
• Total number of runs:	18
• Total hours of operation:	approximately 150 hours
• Carbon monoxide (CO) concentration:	maximum 10 percent obtained

Figure 3-12
Small Scale Biomass Gasifier-Gas Cleanup System Developed by a Project A

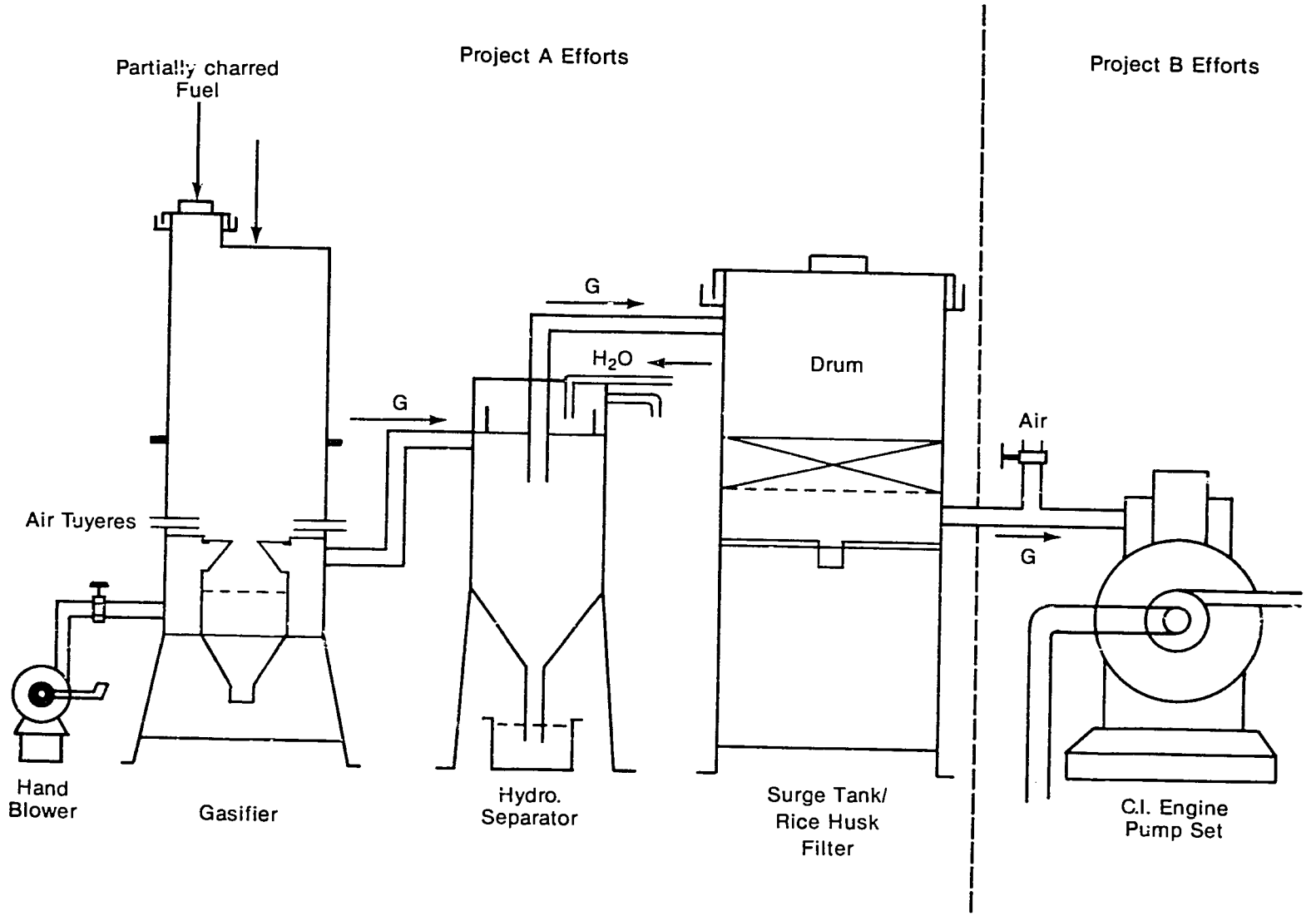

Problems Encountered:

- Choking of the synthetic filters in the cooler, cleaning unit
- Choking of the bed with charcoal of size less than 1/2 inch
- Excessive pressure drop due to packed bed scrubber, hence, low reduction zone temperature and poor gas quality
- Burning of the fuel bed while refueling the gasifier

Because of these operating problems, further testing with this gasifier was stopped and Team A focused its efforts on developing alternative gasifier designs.

3.2.3.2 Development of G-60 Gasifier. This was an original design developed by the Project A team during the early part of phase 2 of the collaborative program. The G-60 gasifier design is presented in Figure 3-13.

Salient Features:

- Combustion zone was made of refractory bricks
- Central air inlet tuyere was provided for its simplicity in construction
- The tuyere tip distributor was made out of refractory brick to protect against the hot combustion zone
- A shaker was provided at the grate for the removal of ash
- All parts were replaceable

During their visit, the U.S. experts had expressed their concerns with respect to the long-term operability of a gasifier fabricated using this design. It was suggested that the G-60 design be modified to develop a workable design. A list of these modifications is given in Section 5.0.

The modified gasifier was fabricated in April 1985 and immediately put under testing. The unit did not perform satisfactorily even after the modifications. The test details are given below:

Test Details:

- Fuels used: charcoal, charred corn cobs
- Period of operation: 100 hours (approximately)

Figure 3-13

First Gasifier Design Developed by Project A
(G-60 Model)

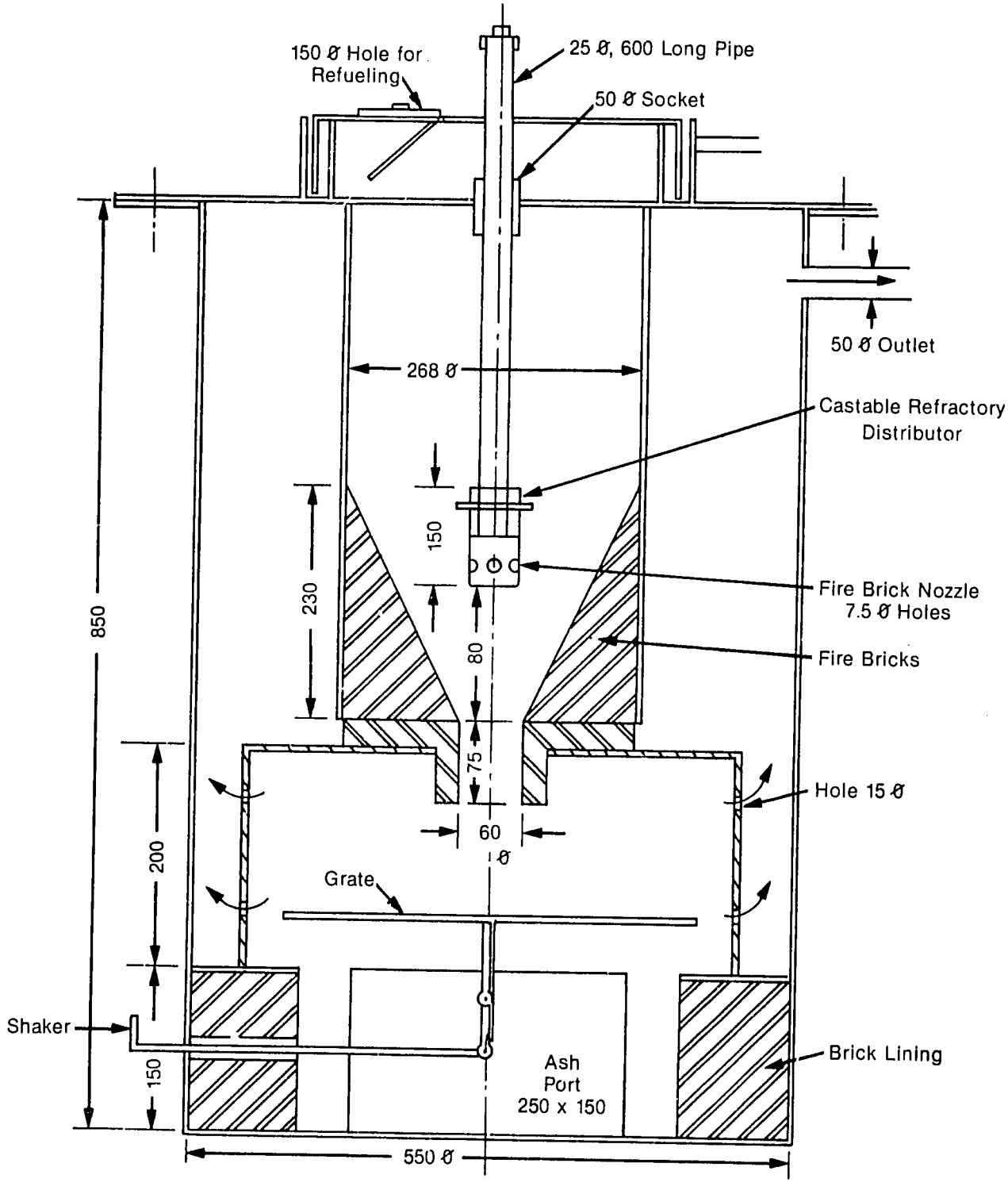

Notes: a) All Dimensions are in mm
b) Ø Refers to Outside Diameter

22

- Total number of runs taken: 23
- Variation in operating conditions: changes in number of tuyeres, diameter of the tuyeres, fuel size, throat diameter, etc.
- Maximum percentage of combustible gases achieved: 9 percent

Problems Encountered:

- Choking of the bed occurred quite often
- Presence of excess air in almost all producer gas samples
- Presence of excessive CO_2 in the gases
- Unstable operation

In view of the above operating problems, some additional modifications were made to improve the operation:

- Provision of a grate shaker to avoid choking problems
- Provision of a cone in the reduction zone
- Variations in number, size, and position of the tuyeres to improve conditions in the oxidation zone and also to reduce CO_2 concentration

These modifications did not improve the overall performance. Therefore, it was decided to develop an alternative design.

3.2.3.3 Development of G-45 Gasifier. The design of a new gasifier, the G-45 gasifier, was initiated while testing and modifications with the G-60 gasifier were continuing. This step was taken as the G-60 gasifier performance demonstrated no improvement. The G-45 gasifier was designed to give greater flexibility in operation. A schematic diagram of the gasifier is given in Figure 3-14.

Design Basis:

The present gasifier was required to operate a 5 hp IC engine, coupled to a pump with briquetted and charred biomass fuels. About 70-80 percent replacement of the diesel oil was possible in IC engines. Hence, the power which the gasifier had to generate was 3.5 to 4 hp/hr. In case the gasifier is to operate a gasoline engine in which 100 percent

Figure 3-14
Cross-Sectional View of G-45 Gasifier

Index
1. Top Shell
2. Bottom Shell
3. Throat Support Plate
4. Throat and Cone Plate
5. Vertical Grate
6. Horizontal Grate
7. Brick Lining
8. Blower Inlet
9. Shaker Rod
10. Cone for Ash Removal
11. Stand
12. Gas Outlet Pipe
13. Air Tuyere
14. Ignition Port
15. Flange
16. Fuel Feeder
17. Thermocouple Port

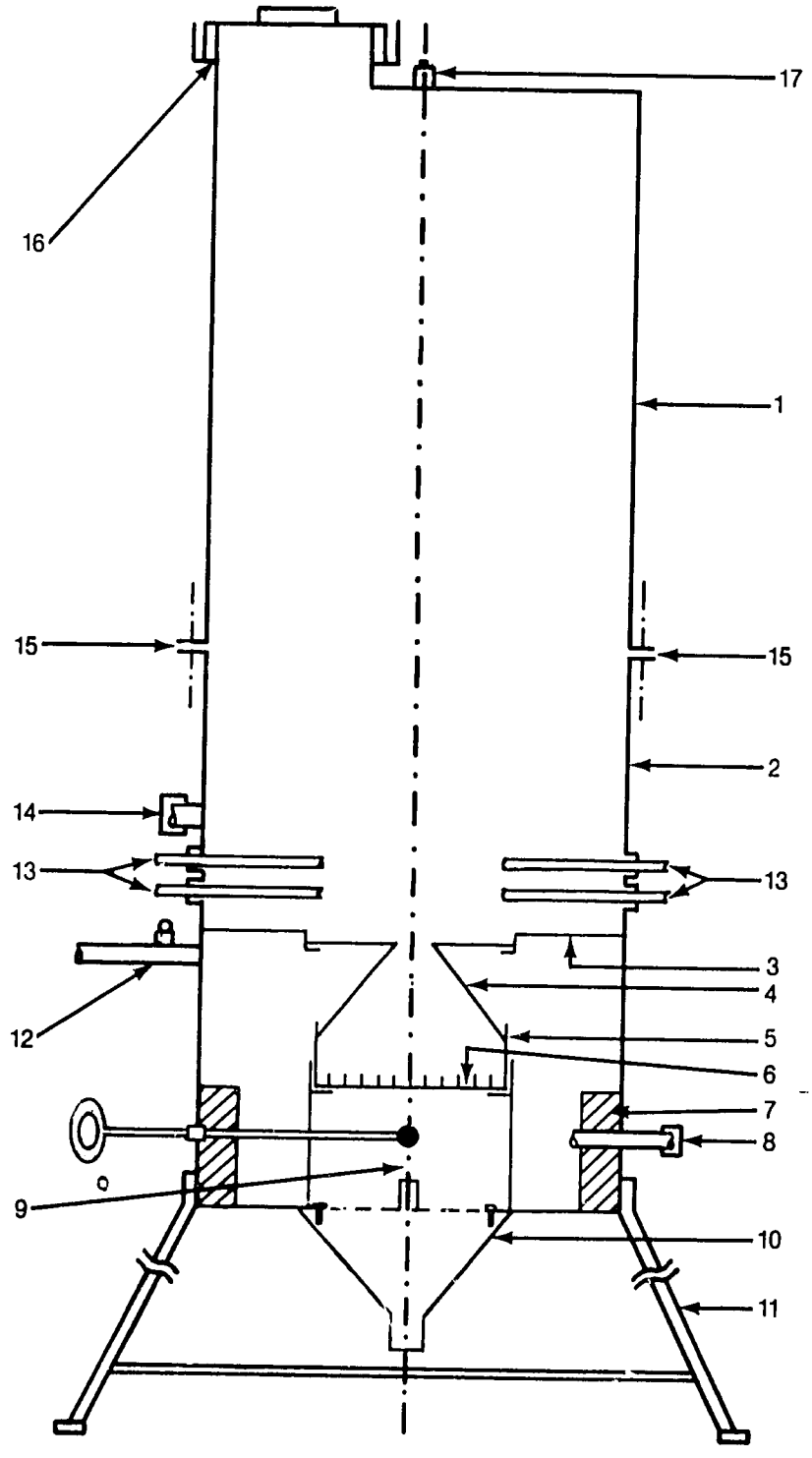

34

replacement of gasoline is possible, the gasifier had to produce an energy equivalent to 5 hp/hr. Keeping both these points in view, the present gasifier was designed for generating a maximum of 5 hp/hr.

The details of the gasifier design calculations are given in Appendix A. The gasifier was fabricated at IIT Delhi based on the above design. The fuel requirement and design/materials specifications of the gasifier are summarized in Table 3-6.

Salient Features:

- The throat and the reduction cone were made up of a single metallic piece which is replaceable and could be easily fixed. Desired hearth loads could be achieved by using suitable sizes for the throat diameter and the length of the reduction cone (see Figure 3-14).

- Tuyere openings were provided at two different levels. This offered some flexibility in changing the fire length. These openings were such that different combinations of the number of tuyeres, diameter of the tuyeres, and distance of the tuyere tip from the centre could be selected.

- The gasifier was in two parts, as exhibited in Figure 3-14, facilitating easy access to the interior parts.

- The combustion and reduction zone areas could be insulated easily, depending on the requirements.

- Side tuyeres facilitated easy flow of the solid fuel through the throat and better distribution of the air in the oxidation zone.

- It had both horizontal and vertical grates. This, to a large extent, eliminated choking problems and also reduced the total pressure drop.

- An opening provided at the bottom of the gasifier enabled frequent removal of ash. This was in addition to the ash port meant for periodic cleaning of the bottom areas of the gasifier.

- A shaking arrangement was also provided to facilitate removal of ash from the grate.

Gas Clean-up System:

A down draft gasifier working on charred biomass fuel in general produces gases containing relatively small quantities of tar and particulate impurities, when compared to systems using raw biomass fuels.

TABLE 3-6
SPECIFICATIONS OF THE G-45 GASIFIER

1.	Producer gas required for operating a 5 hp engine with 20% efficiency	= 1.45 Nm^3/hr
	Solid fuel requirement	= 3.22 kg/hr
2.	Diameter	= 400 mm
	Height	= 1000 mm + 300 mm (stand)
	Throat diameter	= 45 mm
	Air tuyere diameter	= 6 mm
	Number of tuyeres	= 3
	Vertical distance of air tuyeres from throat	= 70 mm
	Horizontal distance from center of the throat to tuyere tip	= 100 mm
	Length of the vertical grate	= 50 mm
	Thickness of the top shell part	= 2 mm
	Length of the reduction zone	= 90 mm
	Diameter of the grate	= 180 mm
	Thickness of bottom part	= 3 mm
	Throat plate thickness	= 5 mm
3.	The materials of construction for different parts of the gasifier are:	
	a) Gasifier shell	-- mild steel
	b) Throat plate	-- mild steel
	c) Air tuyere	-- stainless steel (310)

NOTE: Nm^3 is normal cubic meter measured at 0°C and 1 atmospheric pressure.

36

However, these gases have to be further cleaned and cooled before entering in an IC engine. A wetted wall cyclone separator (or thermoseparator), schematically shown in Figure 3-15, was designed to achieve both the above mentioned objectives. In this, water flowed into the cyclone through the gaps provided between the horizontal plate/gasket and the wall, and then flowed down in the form of a thin film on the inner wall of the cyclone. The partial cooling of the gases, as well as removal of impurities, was affected by absorption into this water film. This cyclone was found to be very satisfactory in effectively cooling the gases and removing the impurities. The unit offered very low pressure drop, ranging from 1 to 11 mm of water column as the flow rate of producer gas increases from 1.6 to 19.3 Nm^3/hr. The thermoseparator also proved to be very effective in cooling the raw producer gas from an average gasifier outlet temperature of about 400°C to about 55°C, achieving a temperature drop of over 340°C.

In addition to the thermoseparator, a filter/surge tank was used to provide additional filtering capacity for cleaning gases containing relatively high impurities. It was also useful as a backup filter for the thermoseparator. This unit essentially consisted of a 55-gallon drum containing a bed of dry rice husks as filtering medium. A water seal was provided to prevent air infiltration into the system. In the G-45 gasifier system, this unit served mainly as a surge tank for dampening the impact of producer gas flow fluctuations to the engine performance. The pressure drop across the unit was found to be very small.

G-45 Gasifier Performance:

Extensive laboratory tests were conducted to fine tune the performance of the G-45 gasifier. The operating conditions and the corresponding performance observed during selected test runs are presented in Tables 3-7 and 3-8, respectively. The gasifier/gas cleanup system was tested for over 150 hours, with the longest continuous run being of 25 hours. During this period, fuel types such as wood charcoal, charred corn cob, corn cob char briquettes, and raw corn cobs were used. During the initial operation, the gasifier performance was unsatisfactory. The total concentration of CO and H_2 was less than 20 percent. In addition, operating problems were encountered because of the formation of fused ash lumps and subsequent choking of the throat plate. A choked throat plate, after approximately the first 50 hours of operation, is shown in Figure 3-16.

It was experimentally determined that excessive air leakage through the shaker rod joint (see Figure 3-14) situated below the reduction zone was diluting the producer gas and consequently reducing the CO and H_2 concentration below 20 percent. The improper size and positioning of tuyeres, coupled with presence of fines in the solid fuel, were promoting

Figure 3-15
Schematic Diagram of Wetted Wall Cyclone Separator

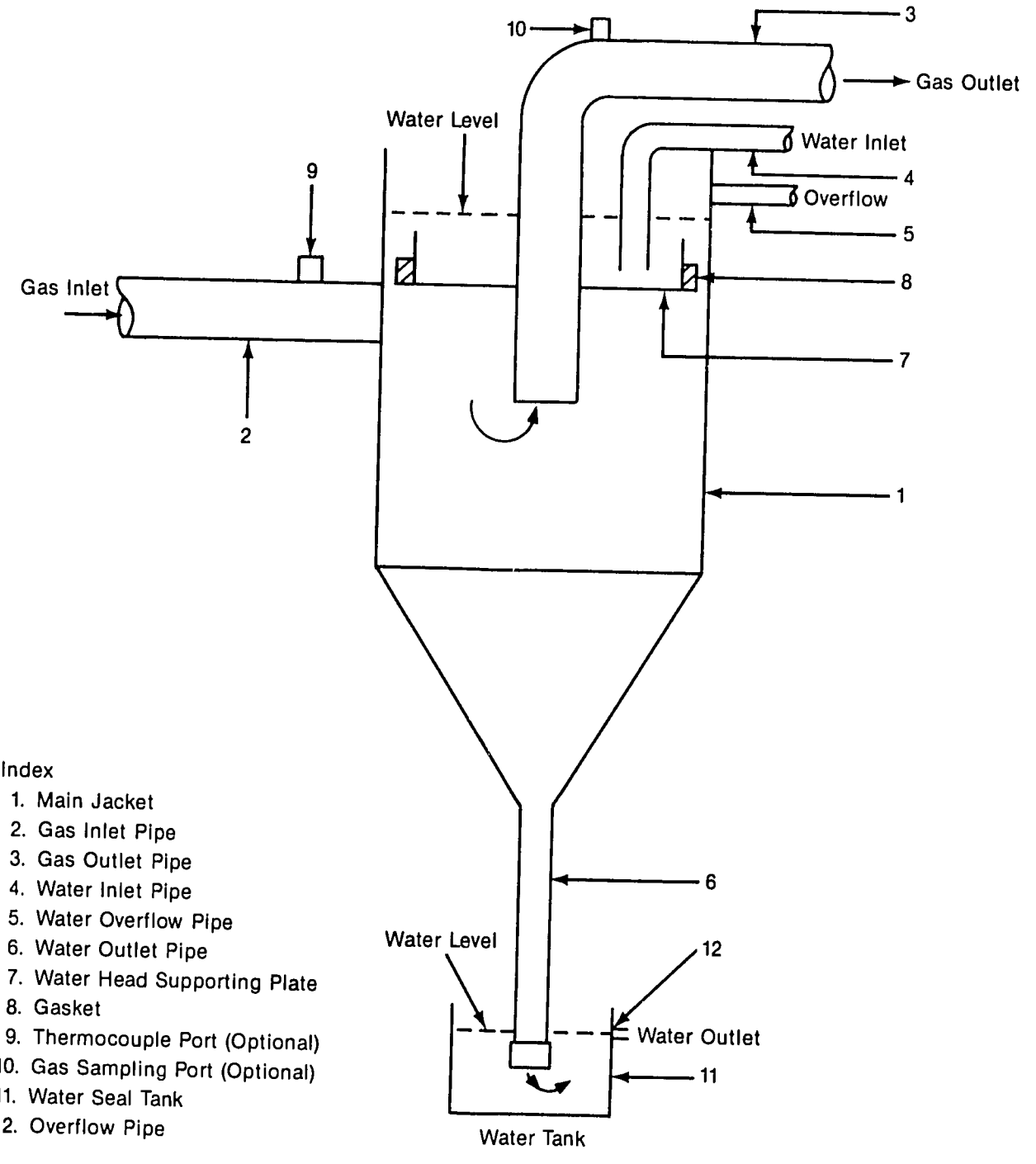

Index
1. Main Jacket
2. Gas Inlet Pipe
3. Gas Outlet Pipe
4. Water Inlet Pipe
5. Water Overflow Pipe
6. Water Outlet Pipe
7. Water Head Supporting Plate
8. Gasket
9. Thermocouple Port (Optional)
10. Gas Sampling Port (Optional)
11. Water Seal Tank
12. Overflow Pipe

-28

TABLE 3-7
GASIFIER OPERATING DATA

Run No.	Duration of Operation (hrs)	Fuel Used	Fuel Consumption Rate kg/hr	Throat Diameter (mm)	Number of Tuyeres	Tuyere Height (mm)	Diameter of Tuyere (mm)	Remarks
1.	3.0	Charcoal (3/4"-1/2")	3.6	45	3	70	8	Ash clinker formation
2.	25	-Do-	3.1	45	3	70	9	Three clinkers
3.	7.5	Corn cob char (3/4"-1/2")	3.	45	3	90	9	No clinker, low CO content
4.	3.0	-Do-	3.0	45	4	70	8	Smooth operation
5.	3.5	Briquetted charred corn cob (5% binder)	3.2	45	3	70	8	High CO content
6.	6.0	Corn cob char	2.8	50	3	70	8	-Do-
7.	5.5	Charcoal	3.5	50	3	70	8	Low pressure drop
8.	8.5	Corn cob char	2.8	47	3	70	8	Improved performance
9.	9.0	-Do-	3.0	47	3	70	8	High CO content
10.	8.5	Charcoal	2.5	40	3	70	8	Smooth operation
11.	3.0	Corn cob (raw)	2.5	45	3	70	8	Gases contain impurities

TABLE 3-8
GASIFIER PERFORMANCE DATA

Run No.	Temp. at Grate (°C)	Oxidation Zone Temp. (°C)**	Gas Outlet Temp. (°C)*	Gas Outlet Temp. After Cooling (°C)	% Volumetric Composition of Producer Gas				
					CO	H_2	O_2	CO_2	N_2
1.	480-500	1670	380	52	10.52	0.46	8.23	6.24	74.5
2.	480-515	1700	385	50	11.95	-	7.62	5.42	75.01
3.	360-380	1000	208	47	11.28	3.12	12.23	2.42	70.95
4.	365-380	1130	210	48	12.0	4.32	12.10	3.21	68.37
5.	350-360	1100	176	48	13.52	4.31	10.20	3.21	68.76
6.	420-450	1210	269	51	23.87	5.66	3.05	4.41	62.99
7.	584-620	1320	308	48	24.31	4.28	3.98	5.53	64.28
8.	550-600	1280	320	46	25.87	5.79	1.93	4.07	62.34
9.	500-550	1250	334	45	23.89	7.41	1.45	5.43	61.70
10.	480-520	1250	340	45	26.22	6.6.	1.35	4.09	61.67
11.	450-480	1300	310	45	Due to contaminents gases were not analyzed				

* Temperature of gas at the time when gas sample was taken
** Randomly measured

Figure 3-16
Choked Throat Plate Due to Ash Clinkering

the ash clinker (i.e., fused lumps) formation. It was also determined that high moisture content in the fuel (greater than 20 percent) and presence of excessive undersize and oversize fuel particles were also impacting the performance of the gasifier.

A combination of equipment modifications and operating precautions (i.e., proper fuel sizing, storage, etc.) had eliminated most of the above-mentioned operating problems. A typical performance of the gasifier achieved after implementing the required design and operational modifications is given in Figure 3-17. The figure indicates that the gasifier/gas cleanup system exhibited consistent performance, yielding an average CO and H_2 concentration of about 30 percent. The average gas flow rate was maintained around 11.0 nm^3/hr. The temperature at the grate was held around 500°C, indicating an excellent thermal balance between oxidation and reduction zones of the gasifier. The modified gasifier system (G-45 design) was extensively operated in the Project A laboratory, before it was integrated with the modified diesel-engine pumpset developed under Project B. The integrated gasifier-engine tests are described in Section 3.4.

3.3 Design and Development Efforts of Project B

This section presents the diesel engine modification and performance testing efforts undertaken by Project B during phases 1 and 2 of the collaborative program. The work completed can be summarized as follows:

- Installation, fabrication work on engine-gasifier gas cooling and cleaning system, and its commissioning
- Retrofits for engine intake system modification
- Experimental optimization of engine injection timing for producer gas operation
- Experimental optimization of engine compression ratio with minimal engine modification for producer gas operation
- Performance test on engine with various gas flow rates
- Emission tests on producer gas engine
- Rating test on producer gas engine as per Indian Standard Institute (ISI) specification.
- Fuel consumption test on producer gas engines as per ISI specification.

A description of the above mentioned aspects of the work is given in the following subsections.

Figure 3-17
Typical Performance of G-45 Gasifier System

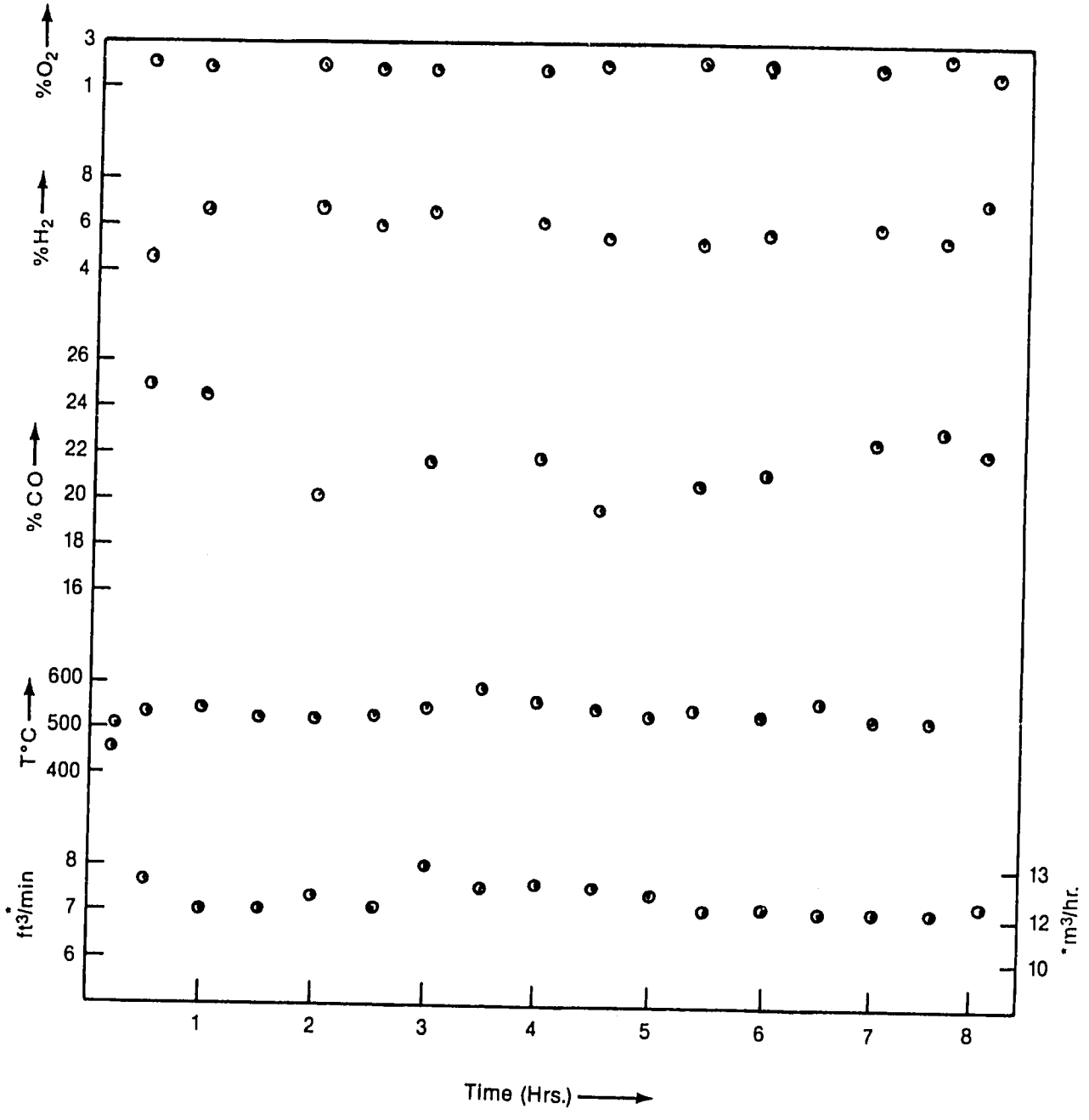

*Standard Cubic Feet
Normal Cubic Meter

3.3.1 Engine Intake System Modification

A suitable and reliable small size gasifier is a prerequisite for any R&D work on utilization of producer gas in IC engines. Pending arrival of a commercial gasifier from the U.S., it was decided to use a charcoal gasifier and gas cleaning system that was designed and fabricated in the Mechanical Engineering Laboratory of ITT, New Delhi, before the initiation of the U.S./India Cooperative Alternative Energy Program.

A compression ignition (CI) engine (or diesel engine) can be made to operate on producer gas by any one of the following methods:

- Conversion to Otto cycle operation by incorporation of a spark plug. Such a modification can enable engine operation entirely on producer gas. However, it involves relatively complex and expensive changes on the engine, hence it is not attractive and cannot be recommended for existing small horsepower compression ignition engines.

- Dual-fuel operation, by incorporating a retrofit in the intake system to achieve induction of gas-air mixture of proper quality and desired quantity. There is a minimum diesel pilot charge which is essential to initiate and sustain combustion with producer gas as the main fuel. This charge may vary from as low as 10-20 percent to as high as 60-70 percent of its original quantity at rated load. This method is well suited for modifying existing small diesel engines, and thus was selected for the engine modification work performed under Project B.

The arrangement for mixing producer gas and air constitutes an important part of the modified engine intake system, because complete combustion and low fuel consumption can be obtained only with proper mixing of air and gas. Various types of arrangements for mixing air and gas were designed, fabricated, and tried on the engines to arrive at the most appropriate arrangement. Two of these retrofits were finally chosen for extensive trials.

Based on these experimental evaluations, the design of the retrofit was standardized. It consisted of a properly designed venturi system in the air intake coupled with valves for regulating the gas flow and the quantity of the gas-air mixture entering the engine cylinder. The venturi system enabled engine speed dependent control of the amount of gas inducted, while the gas valve permitted engine load dependent control. Figure 3-18 shows a schematic diagram of the standardized retrofit selected for conducting engine performance tests.

3.3.2 Experimental Setup and Techniques

In the experiments, a couple of four-stroke single-cylinder CI engines (direct injection type with a rated horsepower of 5 at 1500 rpm,

Figure 3-18
Engine Intake System Retrofit

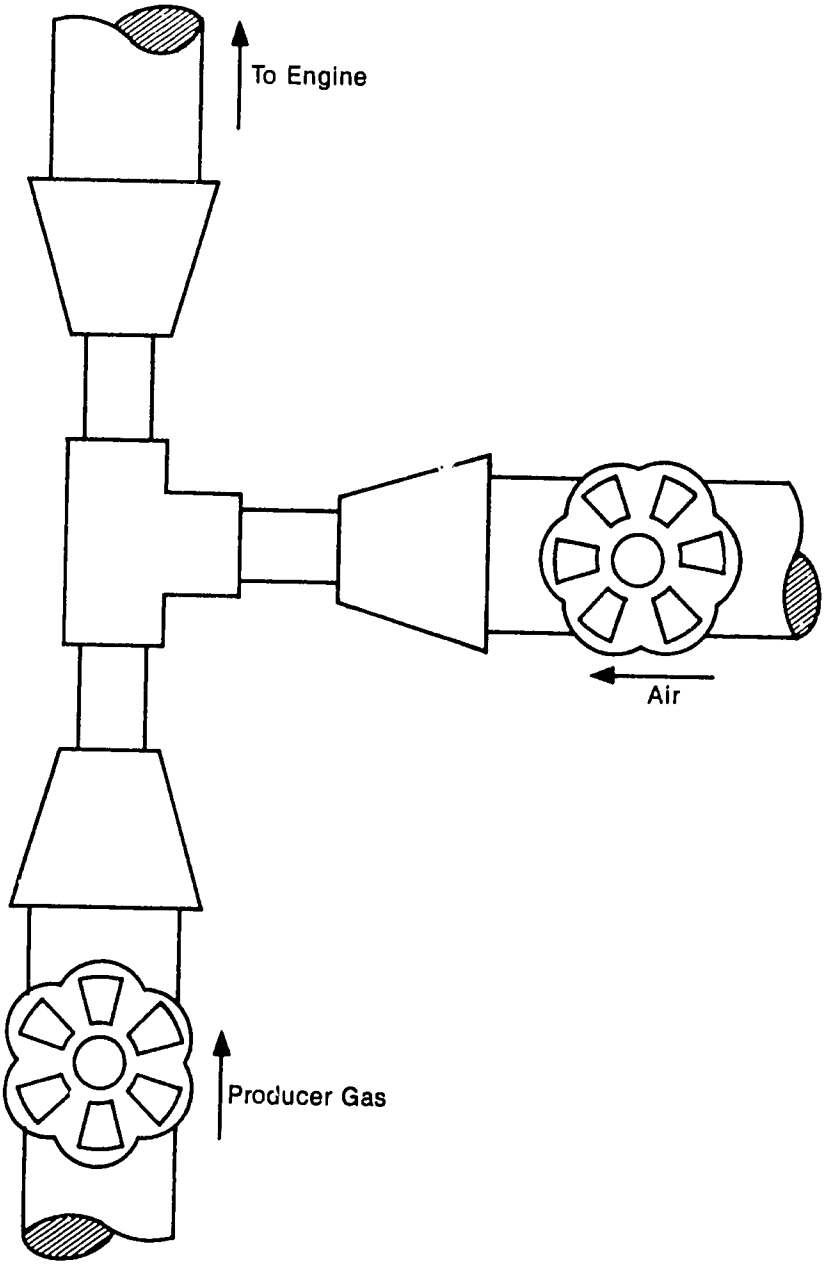

and compression ratio of 16) of the type most commonly used for farm irrigation, and also a research engine (swirl type combustion chamber and compression ratio of 22) having arrangement for wide variation of injection timing, were employed. The engines were coupled to electric dynamometers for measurement of their power outputs. The test rigs were suitably instrumented for accurate measurements of fuel flow rates (both diesel oil and gas), engine speed, air flow rate, exhaust gas composition, and temperature, etc. The quality of gas entering the engine intake system was continuously monitored using a gas analyzer and gas calorimeter. Figure 3-19 is a schematic diagram of the gasifier engine unit experimental setup designed for performance and exhaust emission evaluation of the dual-fuel engines.

The engines were operated over several speed-load ranges, and tests were conducted to obtain the engine performance data over the entire engine range of operation, with both full diesel and dual-fuel operation with producer gas as the main fuel. The test techniques were standardized and engine performance and emission characteristics were plotted.

3.3.3 Discussion of Test Results

Various types of tests were conducted on the different engines employed to obtain the performance and exhaust emission data over the entire range of engine operation. These tests were conducted with varying proportions of producer gas substitution, at various injection timings, and at different compression ratios.

From the extensive experimental data obtained, appropriate graphs were plotted to assess the performance and exhaust smoke and carbon monoxide emission under different operating conditions. These plots were also used to optimize the fuel injection timings and adjust the compression ratio to achieve optimum engine performance consistent with maximum full load energy substitution by the producer gas.

In addition, ISI ratings and fuel consumption tests were carried out on the modified engine with dual-fuel mode of operation. These tests included continuous 12-hour operation of the engine.

A typical engine performance achieved in one of the tests on the 5-hp engine, conducted at 1500 rpm, is presented in Figure 3-20. The performance data were collected both for full diesel and dual-fuel operation. As shown in Figure 3-20, the brake thermal efficiency of the engine on dual-fuel operation was significantly lower than the operation on straight diesel fuel. The reduction in the thermal efficiency was due to: (a) lower energy density of the producer gas air mixture and (b) increased pumping loss due to total pressure drop in the gasifier, gas cleanup, and cooling system. The stoichiometric gas-air mixture has

Figure 3-19

Experiemental Setup for Conducting Engine Performance Tests

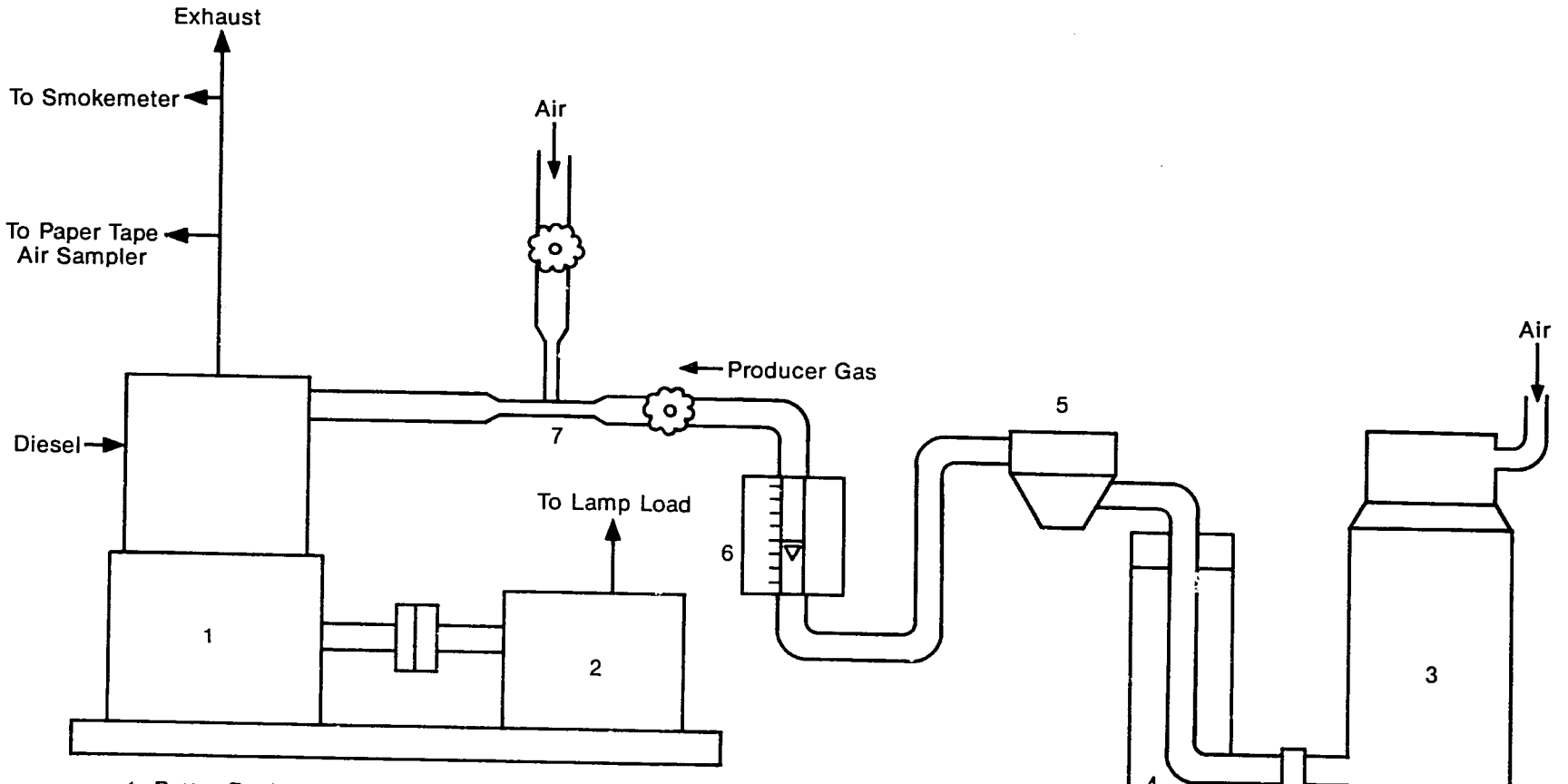

1. Petter Engine
2. Generator
3. Down Draft Gasifier
4. Cooling Tower
5. Cyclone Filter
6. Rotameter
7. Engine Intake System Retrofit

Figure 3-20

Engine Performance for Diesel and Dual-Fuel Operation Tested Under Project B

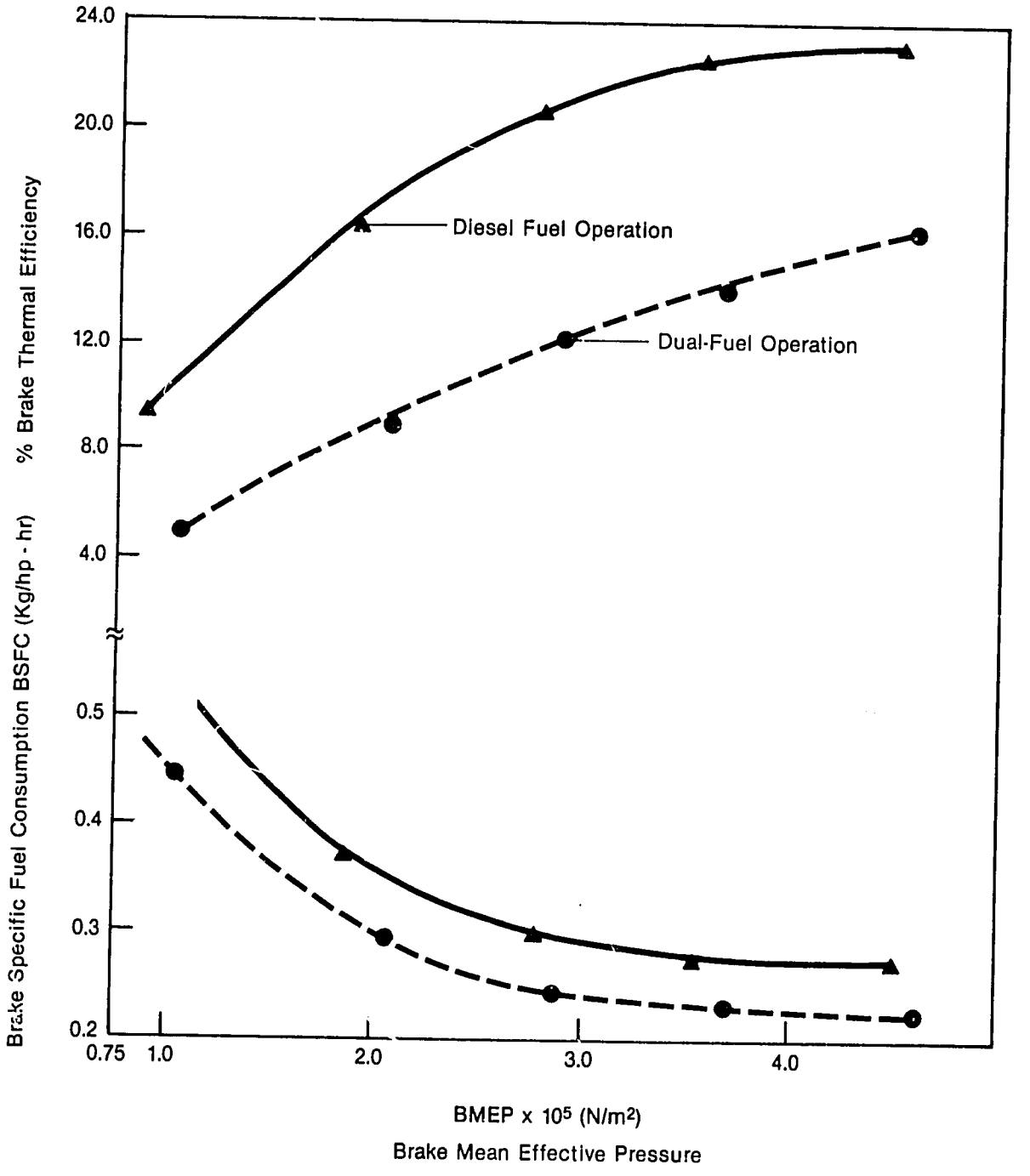

an energy density of 2.5 MJ/m^3 compared to 3.3 MJ/m^3 for diesel-air mixtures. Thus, producer gas substitution lowers the heat value of the fuel-air mixture by about 20 percent.

In the operation of the engine with total diesel fuel, there are some mechanical losses which are generally caused by friction of the bearings, pistons, and various other moving mechanical components. With the incorporation of the gasifier and gas cooling-cleaning system on the engine suction side, the engine has to provide all the suction that is necessary to overcome the total pressure drop in this system. Thus, producer gas substitution through engine suction results in a considerable additional pumping loss. This causes loss of engine output and efficiency.

The thermal efficiency on dual-fuel operation was particularly poor at part-load operation when compared to the full-load operation. For example, (as disclosed in Figure 3-20), as the engine load changed from 25 percent of the rated capacity to 100 percent, the brake thermal efficiency increased from a bare 4 percent to about 14 percent. The specific fuel consumption for the straight diesel and dual-fuel operations for different engine outputs is also shown in Figure 3-20. The difference in the specific fuel consumption between these two curves at a selected engine output would yield the total diesel fuel replaced by the producer gas.

Figures 3-21 through 3-23 show the influence of injection timing on the performance of dual-fuel engine. These graphs are based on the experimental data obtained from the research engine which had an arrangement for wide variation of injection timing. They show that with an advance in the injection timing, the performance of the engine improved considerably. However, advancing the injection timing beyond a limit resulted in misfiring, knocking, and loss of power. For the high compression ratio, indirect injection type of engine used, the limiting injection timing was found to be 43° BTDC (before top dead center). Within the range (i.e., from 32° to 43° BTDC) advancing the timing improved engine thermal efficiency (Figure 3-22), reduced diesel consumption (Figure 3-21), and allowed greater degree of producer gas energy substitution (Figure 3-23).

A representative performance of a modified commercial diesel engine, which was finally integrated with the gasifier system developed in Project A (see Section 3.4), is given in Figure 3-24. There is a significant reduction in brake specific fuel consumption in the dual-fuel mode of operation with maximum fuel savings obtained at around 7 m^3/hr gas flow rate.

Figure 3-21

Variation of Specific Fuel Consumption (BSFC) with Engine Output for Different Injection Timings

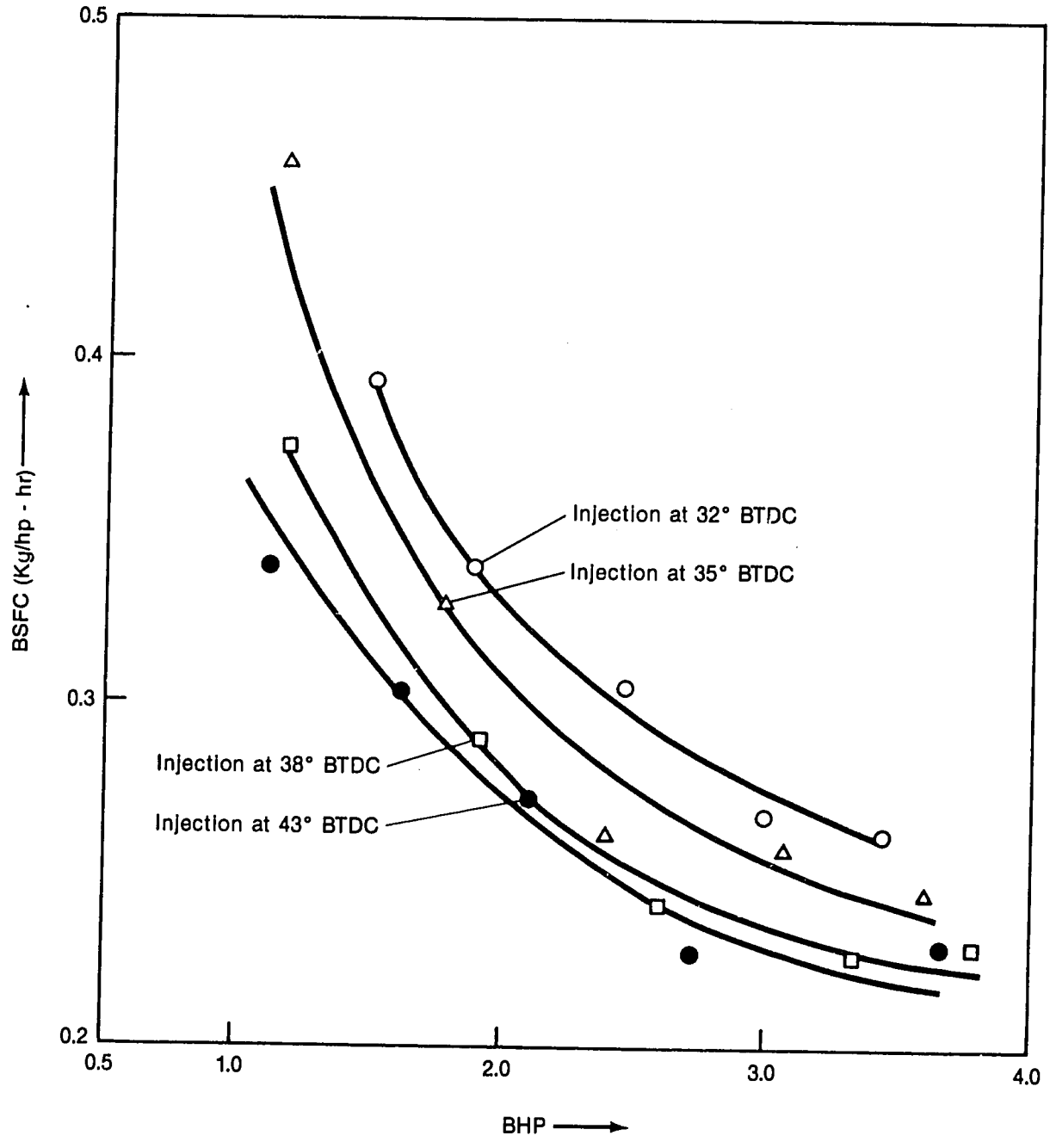

(Ricardo Research Engine, 1500 RPM Dual-Fuel Producer Gas Flow Rate: 8.5 m^3/hr)

50

Figure 3-22
Variation of Brake Thermal Efficiency with Engine Output for Different Injection Timings

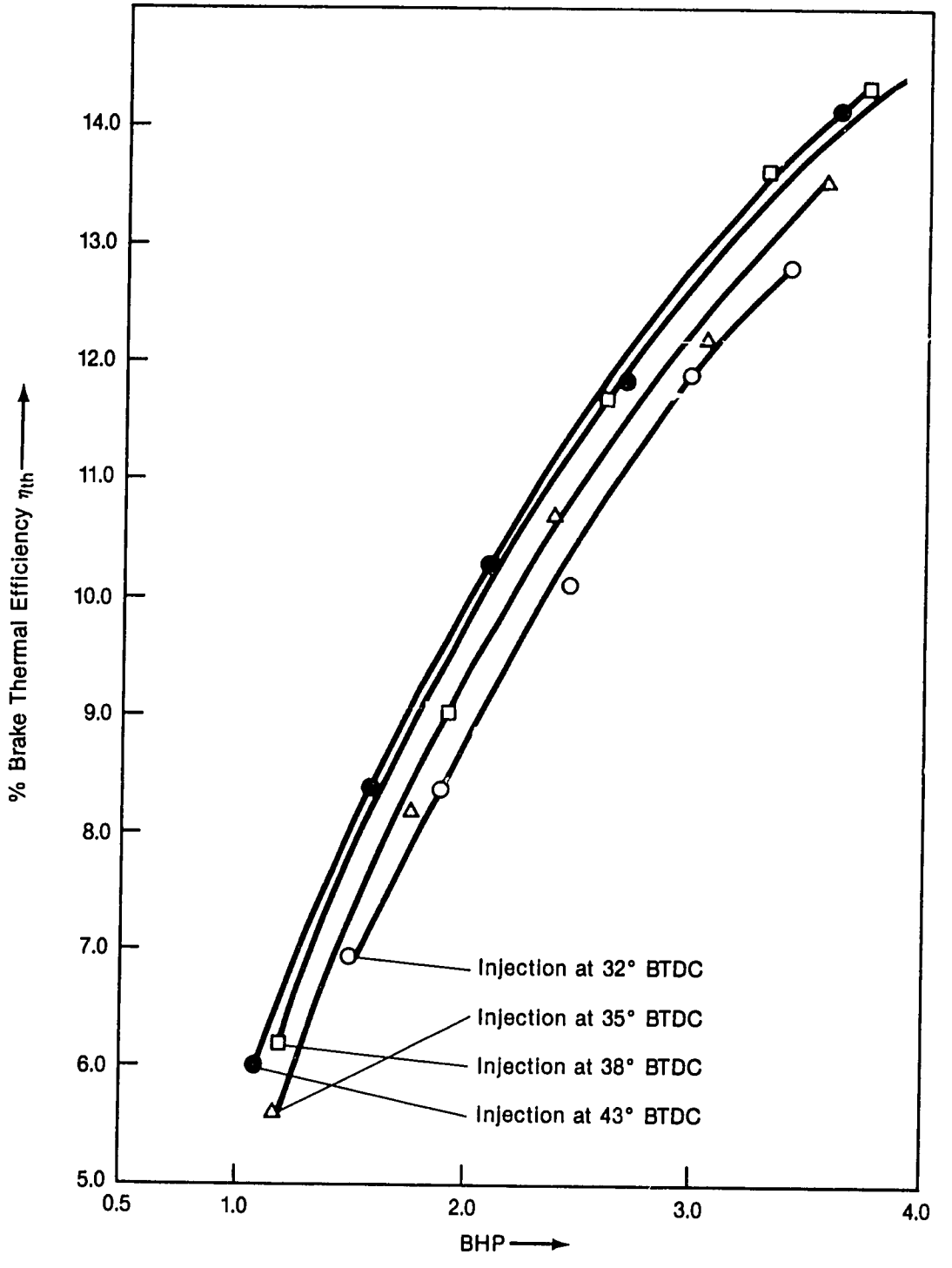

(Ricardo Research Engine 1500 RPM Dual Fuel; Producer Gas Flow Rate: 8.5 m^3/hr)

Figure 3-23

Variation of Percent Energy Input by Producer Gas and Thermal Efficiency with Injection Timing

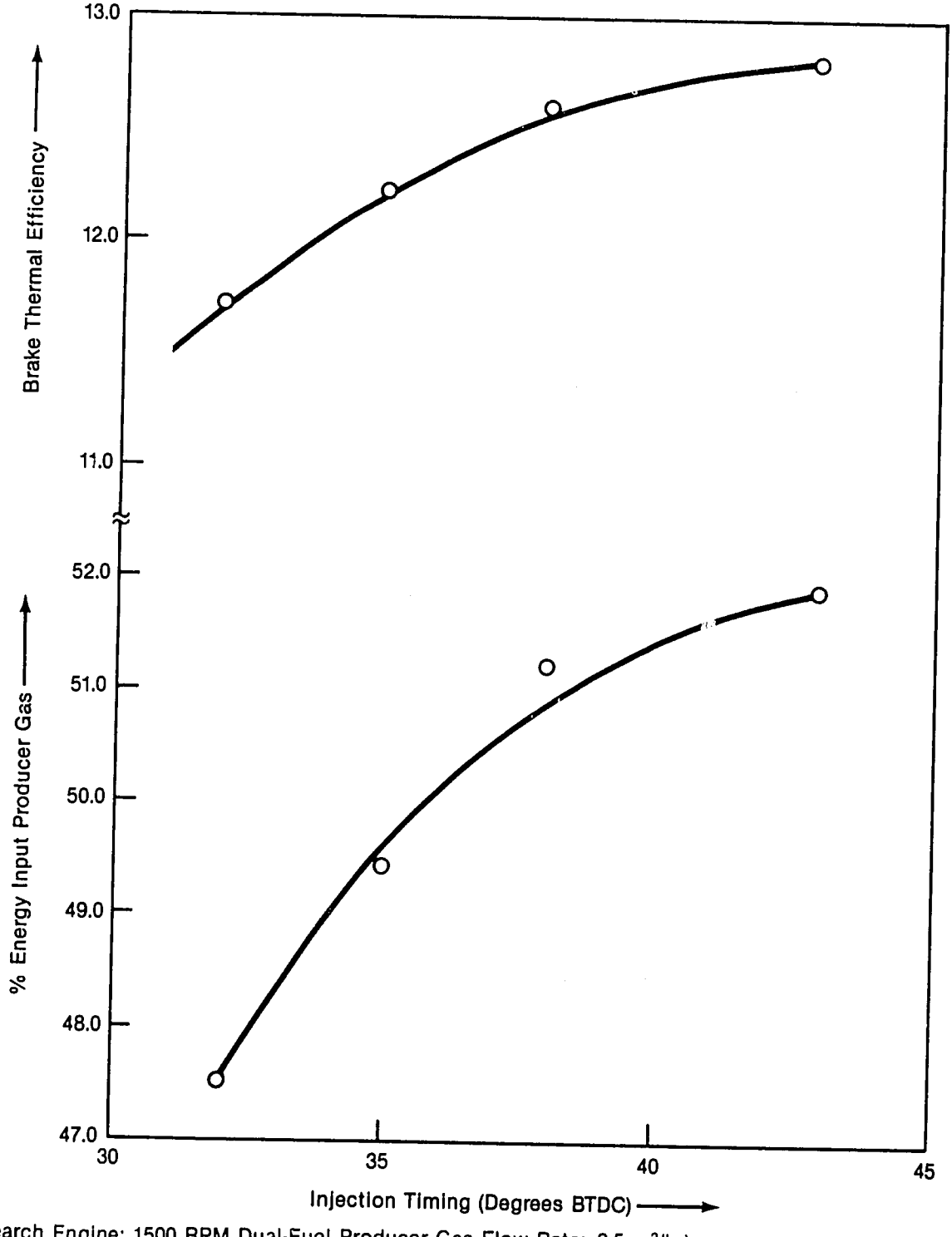

(Research Engine; 1500 RPM Dual-Fuel Producer Gas Flow Rate: 8.5 m^3/hr)

Figure 3-24

Variation of Specific Fuel Consumption with Producer Gas Flow Rate at Different Engine Output

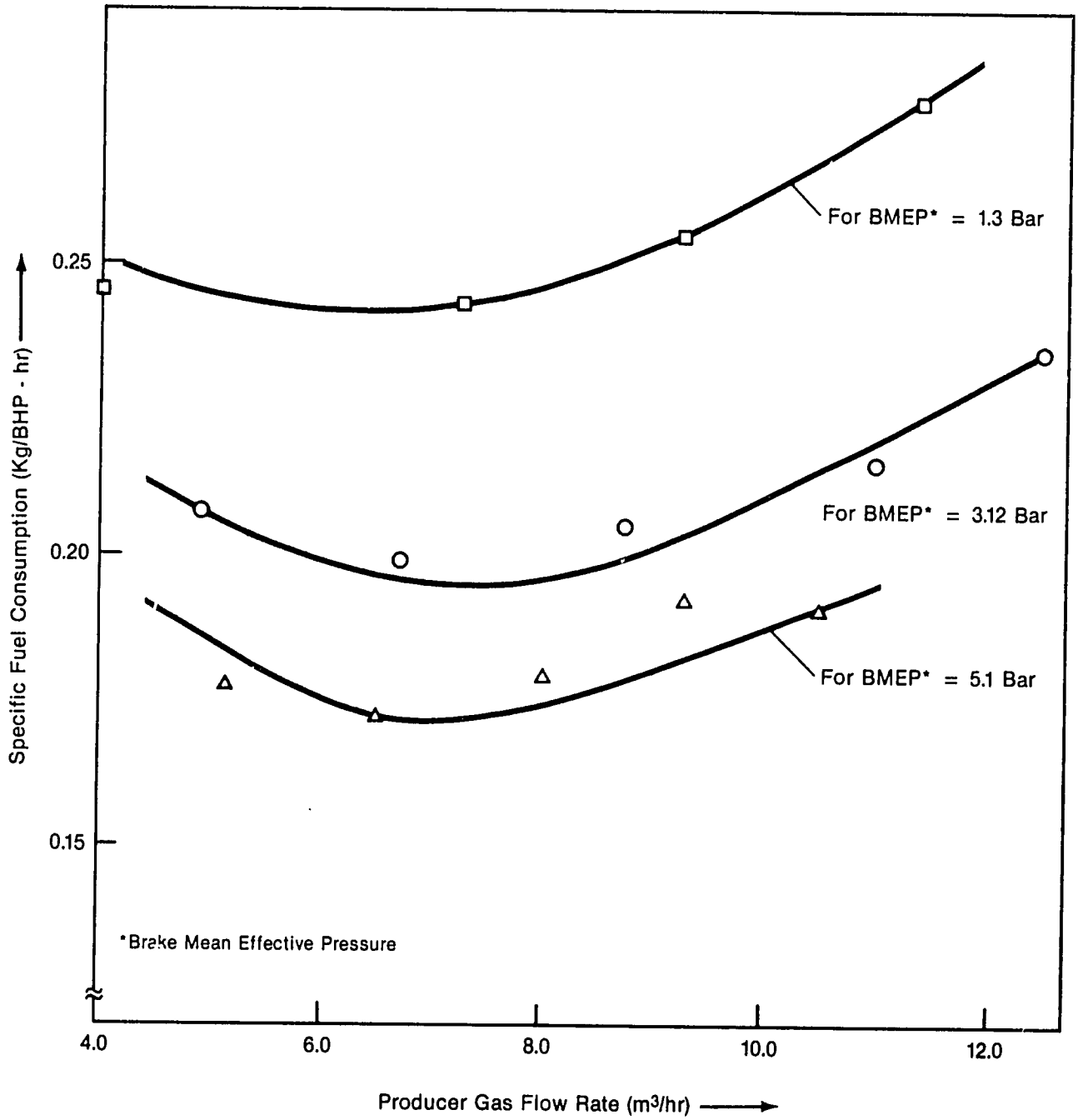

(Dual-Fuel Operation; Engine Speed — 1500 RPM)

Figure 3-25 demonstrates the influence of injection timing on engine efficiency at different producer gas flow rates. It appears that with the dual-fuel operation, advancing of timing is helpful. The optimum injection advance is around 7° of crank travel. Excessive injection advance induces engine knock with consequent loss of power and efficiency.

Increasing the compression ratio resulted in fuel economy in the dual-fuel engine. Figure 3-26 displays the improvement in brake-specific fuel consumption brought about by raising the engine compression ratio from 16 to 17.2. Around 2 percent improvement in the thermal efficiency of the engine was obtained at its rated load by this increase in compression ratio. Thus, suitable engine modifications by way of adjustment of injection timing and compression ratio could go a long way to improve the power output and efficiency of the producer gas engine and counter the adverse effects of lower heating value of the gaseous fuel.

The concentration of carbon monoxide in the engine exhaust for dual-fuel operation is represented in Figure 3-27. This figure demonstrates that the exhaust carbon monoxide concentration increases with the producer gas flow rate, and that higher exhaust carbon monoxide emissions occurred at part loads. The reason for this was that at any particular load, as the gas flow rate increased, an increasing proportion of the gaseous fuel was left unburnt. This resulted in higher carbon monoxide concentration in the exhaust effluent. For a given gas flow rate as the load increased, there was better utilization of gas with a consequent reduction in the exhaust carbon monoxide concentration.

The variation of engine exhaust smoke density with engine load and producer gas flow rate is given in Figure 3-28. This figure reveals that smoke density increases with increasing load and gas flow rates. Increase in load is known to increase diesel smoke due to thermal cracking of fuel molecules at the prevailing higher temperatures. Increased gas flow rate also increased the smoke density because of increased amount of gas-borne particulate matter entering the engine.

Finally, Figure 3-29 demonstrates the fuel consumption characteristics of the dual-fuel engine as per ISI consumption tests. The specific fuel consumption for dual-fuel operation is much lower than that obtained with total diesel operation.

The ISI test involving continuous 10-hour engine operation followed by a 2-hour test at 10 percent overload was successfully undergone by the engine without becoming overheated and without developing any mechanical trouble. The exhaust temperature varied from 240°C to 270°C and the cooling water outlet temperature from 65°C to 70°C. The modified producer gas fuel engine had thus met the ISI standards for its performance rating. The modified engine was subsequently integrated with the gasifier and gas clean-up system developed under Project A for scheduled laboratory and field tests.

Figure 3-25
Variation of Brake Thermal Efficiency with Injection Timing at Different Producer Gas Flow Rates

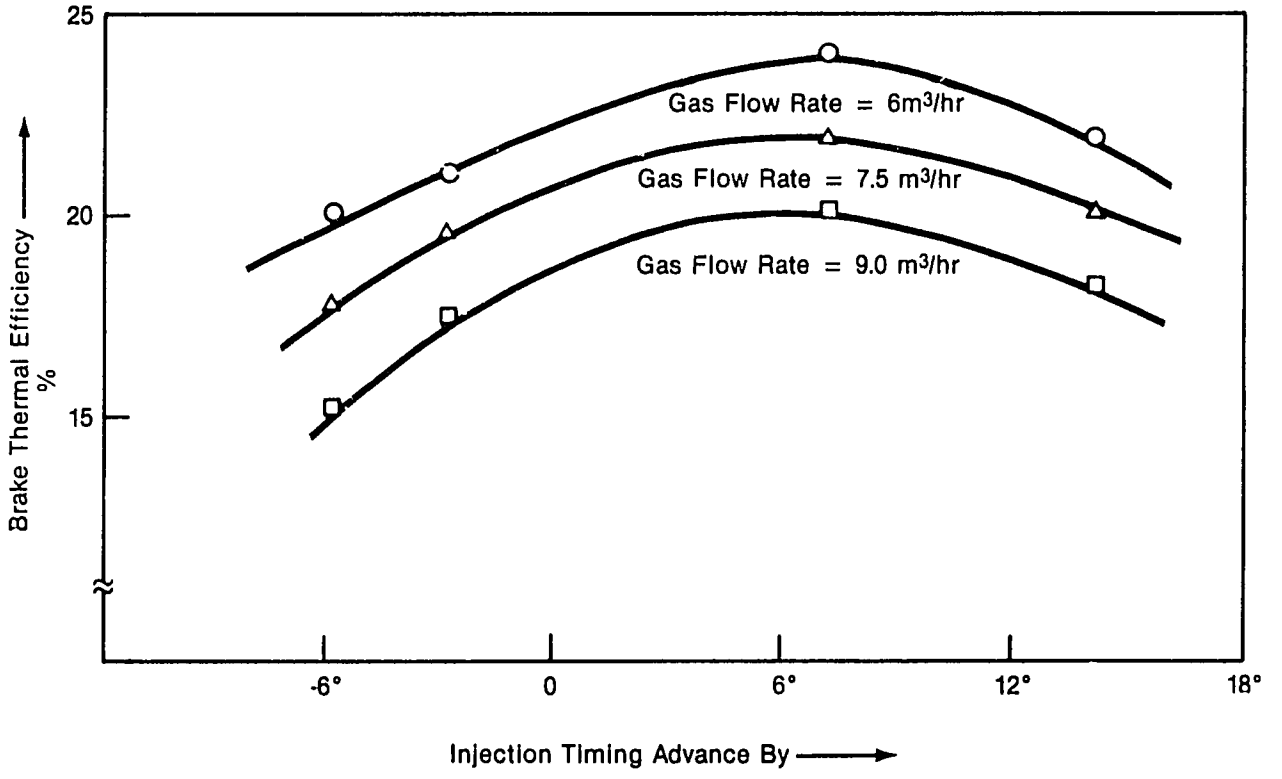

(Dual-Fuel Operation; Engine Speed — 1500 RPM)

Figure 3-26

Variation of Specific Fuel Consumption with Engine Output at Different Compression Ratios

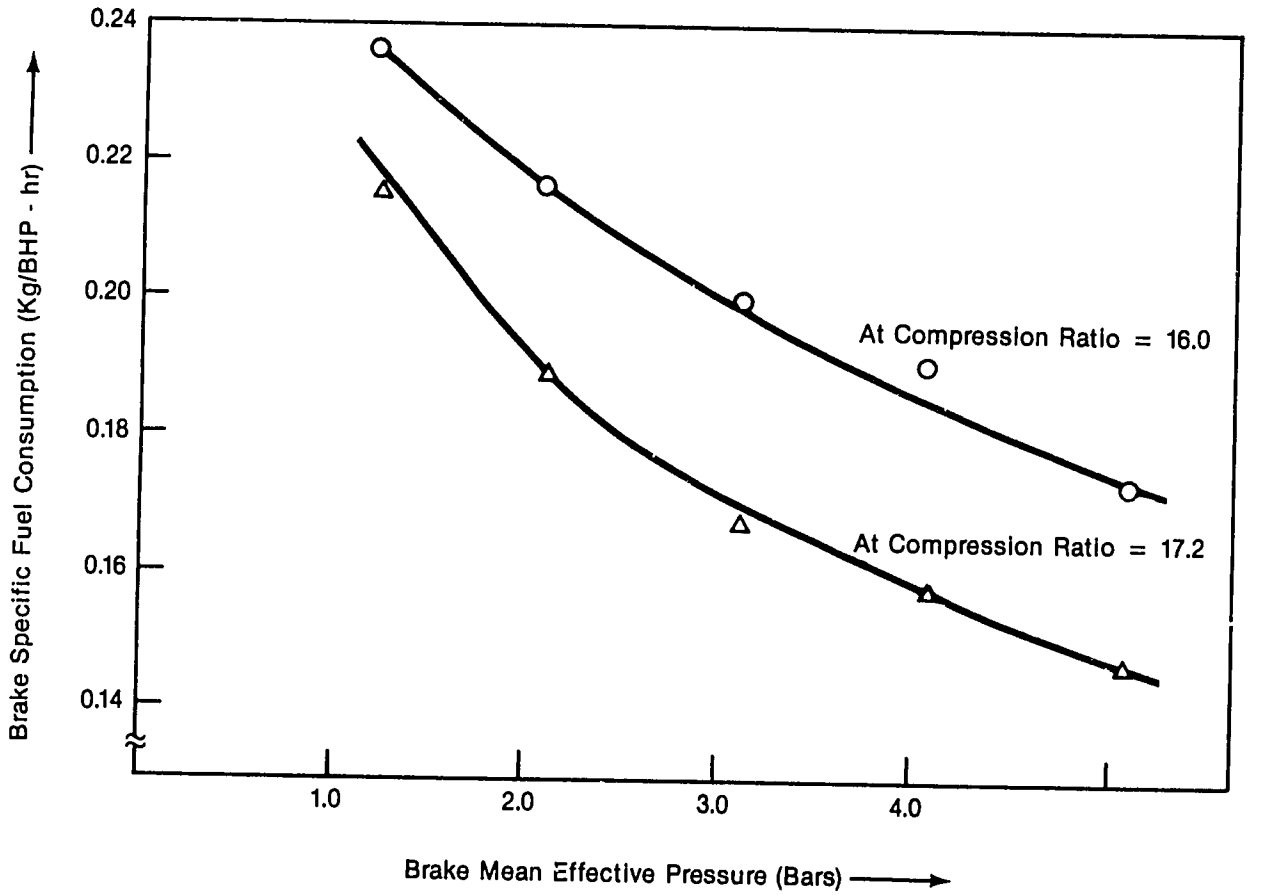

(Dual-Fuel Operation; Producer Gas Flow Rate = 6.5 m^3/hr; Engine Speed — 1500 RPM)

Figure 3-27
Variation of Carbon Monoxide with Engine Output at Different Producer Gas Flow Rates

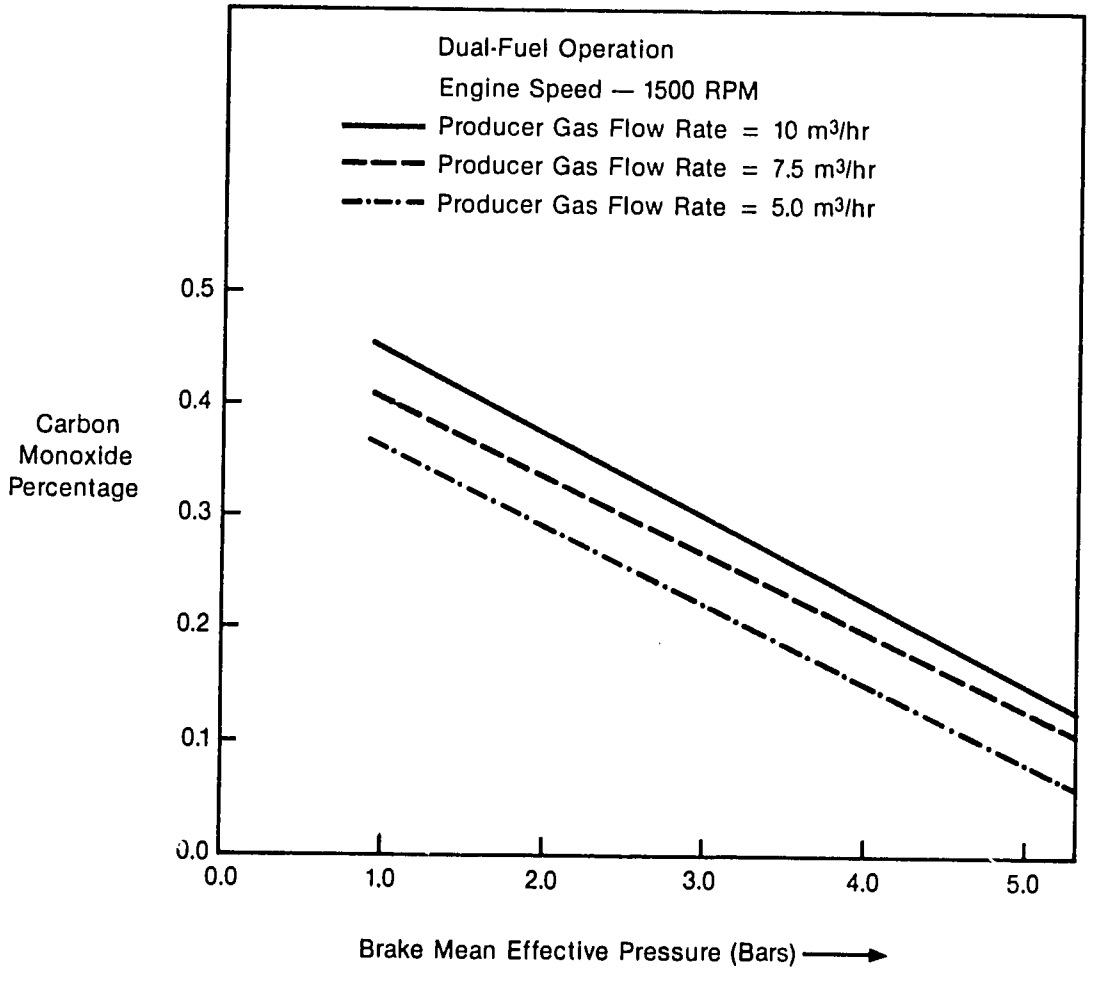

Figure 3-28
Variation of Exhaust Smoke Density with Producer Gas Flow Rate at Different Engine Outputs

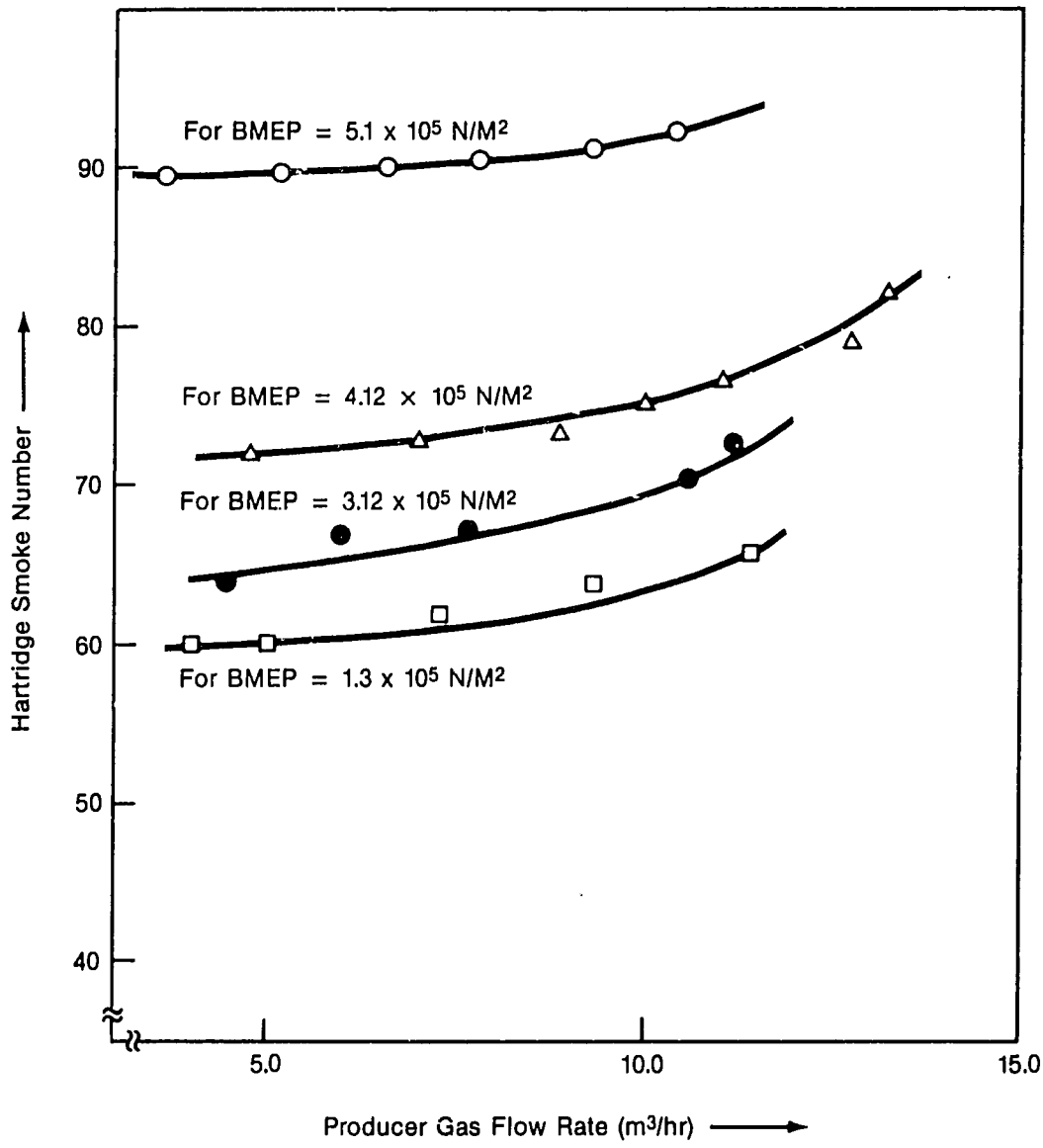

(Dual-Fuel Operation; Engine Speed — 1500 RPM)

Figure 3-29
Engine Performance Characteristics for Dual-Fuel Operation

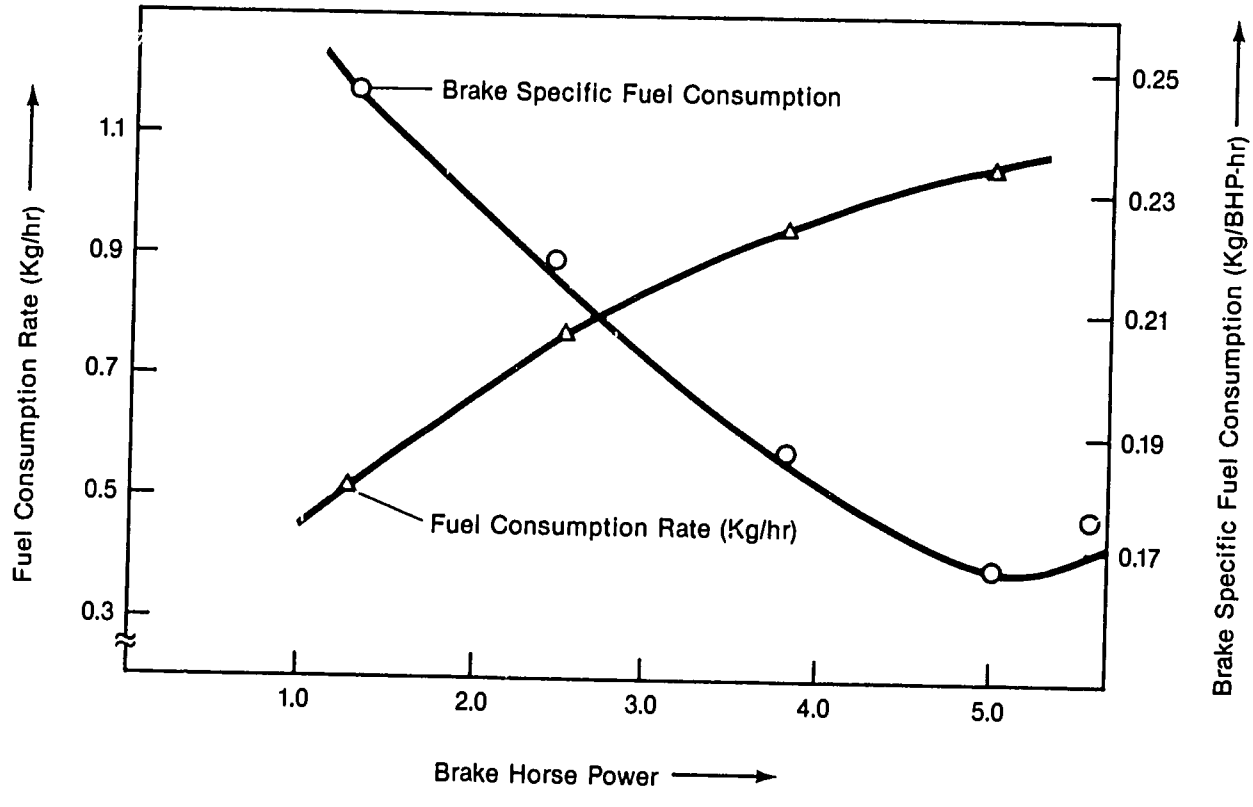

(6.5 m³/hr Flow Rate of Producer Gas; Dual-Fuel OPeration; Enginc Speed — 1500 RPM)

3.3.4 Summary of Test Results

The extensive tests conducted on a modified commercial single cylinder 5 hp diesel engine under Project B, led to the following observations:

- An intake system retrofit, consisting of a venturi and gas valves standardized in this work, could be used for conversion from diesel to dual-fuel operation of the engine with producer gas as the main fuel. Both speed-dependent and load-dependent control of the gas were achievable with this system, and its use could permit up to 80-90 percent producer gas substitution.

- Although it was possible to restrict the quantity of diesel oil injection to 10-20 percent of its full load value, such an arrangement resulted in a drastic reduction of engine output and thermal efficiency. A more appropriate arrangement was to run the engine on total diesel oil up to 20-25 of the rated load and to switch over to dual-fuel operation at higher loads. If drastic reductions in power output and efficiency were to be avoided, the amount of diesel oil should not be reduced below 30-40 percent of its full load value.

- Advancing the injection timing restored part of the power loss caused due to producer gas substitution. Optimum injection timing should be experimentally determined for a given type of engine. The optimum advancement of injection timing for the diesel engine tested in this project was around seven degrees of crank travel. While advancing the injection timing improved both engine output and efficiencies as well as the extent of producer gas substitution, excessive advancing resulted in engine-knock and hence, loss of power.

- It was easier to convert a direct injection diesel engine to a dual-fuel operation when compared to an indirect injection engine. Indirect injection engines with higher compression ratios were not as easily susceptible to such a conversion and gave more trouble with producer gas substitution. Increasing the engine compression ratio from 16.0 to 17.2 resulted in an improvement of around 2 percent in the thermal efficiency of the engine.

- With optimally advanced injection, timing, and increased compression ratio, there was a substantial increase in the proportion of the producer gas substitution possible and there was a considerable improvement in engine performance and efficiency.

- The maximum producer gas flow could be as high as 15 Nm^3/hr, although the most efficient engine performance corresponds to a flow rate of around 7 Nm^3/hr, and under these conditions, a maximum of 75 percent full load energy substitution by producer gas was achieved.

- Producer gas substitution in existing diesel engines increased exhaust carbon monoxide pollution. This was more pronounced at part load engine operation.

3.4 Joint Laboratory Testing

The gasifier unit designed and developed by the Project A team was tested for more than 150 hours of operation, including long time testing of the unit for 25 hours. Analysis of the data like temperatures in the gasifier, composition of gases, temperature drop across the thermo separator and particulate and tar content, etc., revealed that the system was functioning satisfactorily. The engine and pump set supplied by the Project B team were then connected.

The two units were assembled at the test facility of Project A for initiating integrated laboratory tests. The first trial run was carried out in the presence of U.S. biomass specialists during the first week of November 1985. The test was initiated with the engine-pump set running on full diesel to get the base data. The gasifier was also run and the gases were flared during the initial stages. As both units attained steady state condition, the engine was switched over to dual-fuel operation. The system performed satisfactorily for about 20 minutes and then developed a snag. It was found that the trouble was due to a decrease in the reduction zone temperature. The cooling of the bed resulted in poor quality of the gases, and hence rough performance of the engine. It was also found that the pressure drop across the gasifier had increased significantly.

Project A and Project B team members discussed the above problem with the U.S. team members. The U.S. team members suggested certain modifications such as shortening of the hose pipe leading to the engine, smoothing of the tuyeres tips, etc. These modifications were made and found that the problem still persisted. Later it was discovered that it was accumulated rust in the pipe lines that was causing the problem; cleaning the pipe rectified the problem.

The U.S. team members suggested the following procedures for the integrated gasifier-engine system start-up:

Steps:

(1) Obtain diesel engine fuel consumption rate at 1500 rpm on 100 percent diesel fueling.

61

(2) Set the diesel fuel consumption at 30 percent of the value obtained in Step 1, after producer gas, is first fed to the engine.

(3) Observe the reduction zone temperature in the gas producer; if it stabilizes at 450°C or above, then engine BHP is satisfied at 30 percent diesel and the speed for dual fueling is likely t be less than 1500 rpm.

(4) If the temperature in the reduction zone drops below 450°C, hold diesel rate constant, i.e., 30 percent. Adjust governor t give speed of 1550 to 1600 rpm.

(5) Check for stable reduction zone temperature at or above 450°C. If this temperature cannot be held, start Step 2 with 25 percent diesel consumption and continue through Step 5. The objective is to find diesel replacement and engine speed for maintaining a reduction zone temperature of 450° or above.

The gasifier engine was functioning smoothly with slight fluctuation in the reduction zone temperature. However, the system was not functioning satisfactorily for long (6- to 8-hour runs) durations. After further investigations, it was suggested by the U.S. specialists to insulate the bottom part of the gasifier (i.e., fire box) and to increase the tuyere size. The tuyere size was changed to 8 mm internal diameter (ID) and the bottom section of the gasifier was insulated. These modifications resulted in the satisfactory operation of the integrated unit. It was recommended by the U.S. specialists that a minimum of 50 hours of laboratory testing be conducted before moving the integrated unit for field trials. Accordingly, the 50-hour testing was carried out and the data was collected. At the end of the testing, the data collected was mutually exchanged by both Projects A and B teams. All pertinent data wa taken on an hourly basis, as suggested by the U.S. team members.

Typical raw data collected in a day is displayed in Table 3-9. The system performance results obtained from the data presented in Table 3-9 are given in Table 3-10 and are also shown in Figure 3-30. It is noted (Figure 3-30) that the producer gas quality was consistent throughout the day's operation, except for a low value at 3:00 p.m. where the gas was not drawn properly, resulting in excessive air leakage into the system. Similarly, the diesel fuel replacement was also consistent, ranging from 69 percent to 79 percent, with an average value of 72 percent. The gasifier, engine, and system efficiencies are also presented in Figure 3-30. It is evident from Figure 3-30 that the system performance was quite stable and consistent. The engine thermal efficiency on the producer gas ranged from 14 to 20 percent. However, the overall system efficiency was about 7.0 percent. The overall system efficiency was estimated as the rate of energy output in the pumped water, divided by

62

TABLE 3-9
TYPICAL DATA COLLECTED DURING INTEGRATED LABORATORY TESTS

(Average Fuel Consumption Rate: 2.5 kg/hr)

(Light Hours: 11:30 a.m. to 7:30 p.m.)
February 10, 1986

No.	Time	DP (cm H_2O)*	Temp. °C	Gas Composition					
				H_2	CO_2	O_2	N_2	CH_4	CO
1	12:20	2.0	386	3.791	3.45	4.828	64.983	1.154	21.794
2	1:00	1.3	420	2.765	3.918	4.827	66.968	0.155	21.367
3	2:00	1.3	431	4.22	3.644	5.836	65.943	0.129	20.228
4	3:00	1.3	353	2.176	2.004	12.569	70.638	0.054	12.558**
5	4:00	1.3	278	4.310	3.479	3.284	64.587	0.110	24.231
6	5:00	1.3	300	4.646	3.780	5.259	65.445	0.102	20.769
7	6:00	1.3	288	2.968	2.532	9.431	68.455	0.099	16.514

Temperature = below the grate; Composition = % by volume; DP = pressure drop across the orifice

* DP	Flow Rate
1.0	7.0 cu ft/min
1.5	8.3 cu ft/min
2.0	12.0 cu ft/min
1.3	7.7 cu ft/min

**Leakage through cyclone

TABLE 3-9 (Concluded)
TYPICAL DATA COLLECTED DURING INTEGRATED LABORATORY TESTS

Time	RPM	Diesel Consumption Rate for 20 cc	Bourdon Gauge*** kg/cm^2	Manometer Reading+ cm of Hg
11:25	1530	50 sec	.65	50
12:15	1640	4 min	.70	54
1:00	1550	3 min, 8 sec	.75	51
2:00	1580	2 min, 55.7 sec	.70	57
3:00	1540	2 min, 40 sec	.75	49
4:00	1512	2 min, 45 sec	.74	47
5:00	1530	2 min, 36 sec	.75	47
6:00	1540	3 min	.8	49
7:00	1550	2 min, 56 sec	.8	48

***Indirect measurement of static head
+Indirect measurement of velocity head

TABLE 3-10
SYSTEM PERFORMANCE DURING A TYPICAL LABORATORY RUN
(February 10, 1986)

No.	Time	Btu/min (Gases)	Diesel Fuel Replacement (%)	Gasification Efficiency	Engine Efficiency	System Efficiency
1	1220	932.57	79.16	97.24	15.27	7.46
2	1300	643.60	73.41	67.11	18.29	6.66
3	1400	650.12	71.50	67.79	19.98	7.36
4	1500	389.75	68.75	40.64	23.36	6.13
5	1600	755.45	69.69	78.78	14.07	5.83
6	1700	673.25	67.95	70.20	15.13	5.77
7	1800	517.64	72.20	53.98	20.11	6.27
Average Values		651.77	71.81	67.96	18.03	6.5

Figure 3-30
Gasifier-Engine Performance During a Typical Laboratory Run
(Feb. 10, 1986)

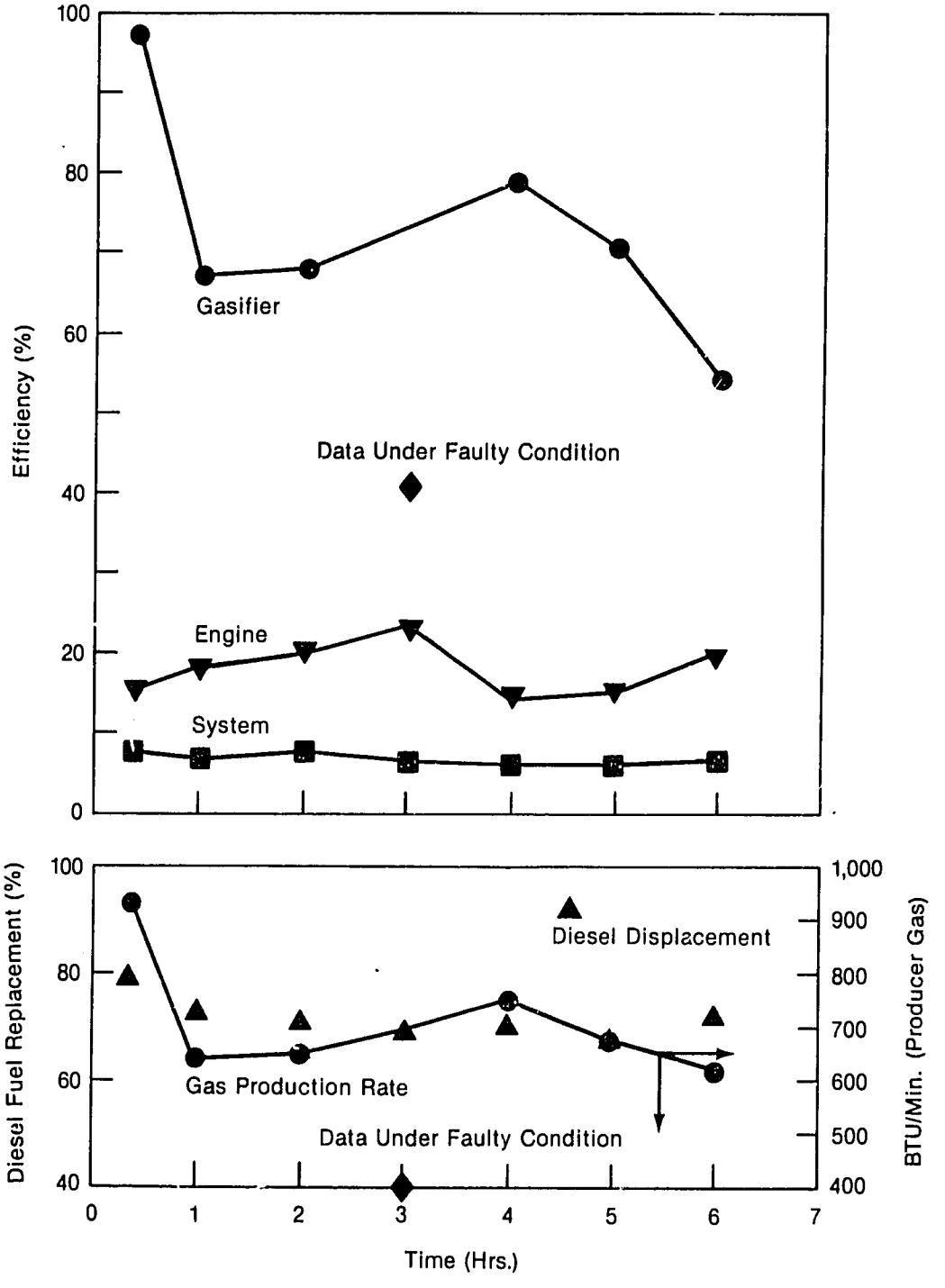

the rate of energy input to the system by charred corncobs and diesel fuel. The overall system efficiency is significantly lower than the diesel engine efficiency, because of the poor operating efficiencies (less than 45 percent) of the centrifugal pumps commonly used in India for lifting irrigation water.

The overall performance of the system for the entire 50-hour integrated laboratory testing is given in Table 3-11. It is observed from Table 3-11 that although the gasifier performance was consistent throughout the period, the engine efficiency, and hence, the system efficiency, slightly decreased toward the end of the test period. This could be attributed to the deteriorating performance of the water pump towards the end of the run.

TABLE 3-11
SYSTEM PERFORMANCE DURING 50-HOUR INTEGRATED LABORATORY TESTS

No.	Day	No. of Hours	Btu/min (Gases) (Avg.)	Diesel Fuel Replacement (Avg.) %	Gasification Efficiency (Avg.) %	Engine Efficiency (Avg. %)	System Efficiency (Avg.) %
1	2/10/86	8	651.76	70.58	67.96	17.53	6.46
2	2/11/86	8	708.21	57.43	73.85	14.86	5.895
3	2/12/86	9	742.15	64.98	77.38	14.56	5.95
4	2/13/86	8	738.97	40.86	77.06	11.84	5.01
5	2/14/86	8	722.68	55.82	75.36	11.60	4.82
6	2/17/86	9	669.43	58.78	69.81	11.63	4.64

4.0 FIELD TESTING EFFORTS

This section presents the field testing results, including site selection and preparation efforts, of small gasifier-engine systems used to lift irrigation water at two different rural regions of India.

The field operator training procedure and the subsequent operational experience are also described. A representative segment of field operational data along with the gasifier-engine pump system performance are highlighted. Finally, a comparison of the laboratoary and field system performance is made.

4.1 Field Testing Efforts of Project C

This subsection describes the field operating experience of a small wood-based gasifier-engine pump system developed under Project C.

4.1.1 Site Selection

The following criteria were used for selecting the field demonstration site:

- Availability of fuel (diesel and wood)
- Price of wood fuel
- Storage space for wood fuel
- Potential for effective utilization
- Availability of skilled operators
- Feedback of performance data
- Demonstration value
- Proximity to the Jyoti Solar Energy Institute (JSEI)

In addition to the above mentioned criteria, it was also ensured that the depth of water in the well did not exceed 25 feet, as the unit to be installed consisted of a centrifugal pump.*

A few sites were visited, and on the basis of the above criteria, it was decided to install the unit on a farmer's field at village Johr. This village is about 7 km from the Institute.

---

*Theoretical Net Positive Suction Head (NPSH) of centrifugal pump is 34 feet.

4.1.2 Site Preparation

The existing irrigation system at this site consisted of an oversized electric motor (20 hp) connected to a centrifugal pump of 7.5 hp capacity. The farmer was selling surplus water to the neighboring farmers. The power supply from the public utility grid was unreliable and inconsistent. The demonstration unit, as suggested by the U.S. specialists, was set up in parallel to the existing irrigation system.

A parcel of land adjacent to the dug well was available for housing the gasifier system. A formal plan of the shed and layout of the equipment, as prepared by the JSEI project team, are given in Figures 4-1 and 4-2. The installation of the original JSEI system was completed on March 11, 1985 and commissioned on March 19, 1985. Figures 4-3 and 4-4 show the photographs of the demonstration unit.

4.1.3 Training of the Local Operator

An instruction manual describing the system operation, maintenance, and safety precautions was prepared and it is presented in Appendix B. Based on the guidelines mentioned in the manual, intensive "hands-on" training was given to the farmer for a week at the JSEI laboratory. During this training period, he was not only familiarized with the operation and maintenance of the system, but also trained in data collection. Special emphasis was placed on safety precautions to be observed during the startup, normal operation, and shutdown. Especially, the operator was familiarized with CO poisoning and the associated health hazards.

Active participation of the farmer during the system installation, startup, and commissioning was encouraged. This participation reinforced his prior training at JSEI laboratory. The farmer was further trained for a week in the field by the JSEI engineers. In addition, a JSEI technician was stationed at the site for an extended period of time.

4.1.4 Field Unit Performance

The original JSEI unit (G-50) accumulated over 600 hours of field operation. The modified unit (G-55) was then operated for another 400 hours. The farmer, as indicated earlier, was trained for monitoring and collecting data during both field trial segments. The field trial unit was instrumented to give easy readings of temperatures, diesel, and water flow. A data collection sheet was formatted in the local language (Gujarati). The farmer recorded the data every two hours and the completed data sheets were sent to JSEI every other week. The raw data was reviewed and evaluated by JSEI project engineers.

Figure 4-1

Floor Plan and Elevation for the Field Demonstration Unit

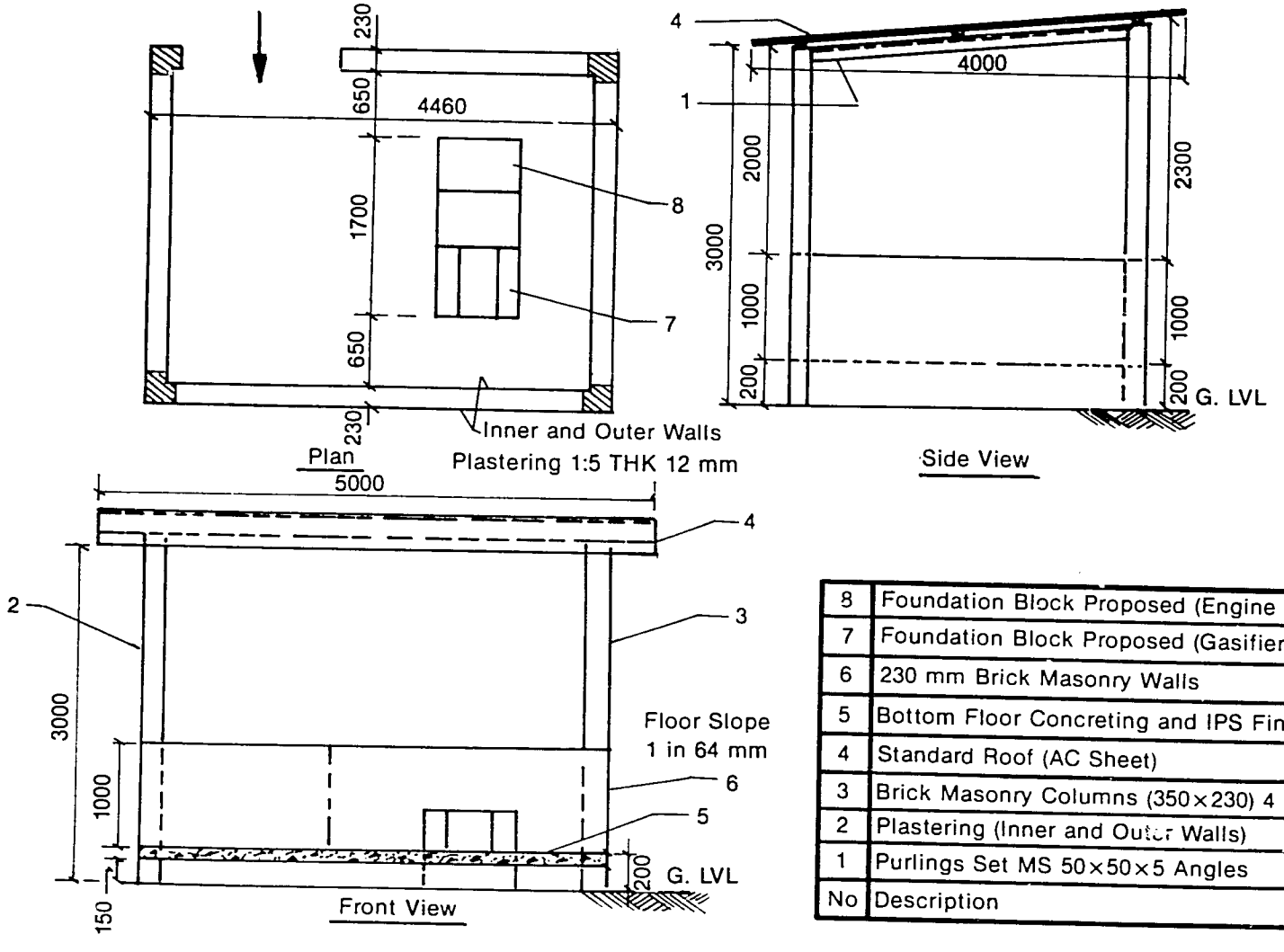

No	Description
8	Foundation Block Proposed (Engine and Pump)
7	Foundation Block Proposed (Gasifier)
6	230 mm Brick Masonry Walls
5	Bottom Floor Concreting and IPS Finish
4	Standard Roof (AC Sheet)
3	Brick Masonry Columns (350×230) 4 Nos.
2	Plastering (Inner and Outer Walls)
1	Purlings Set MS 50×50×5 Angles

Figure 4-2
Foundation Details for Gasifier-Engine Pumpset System

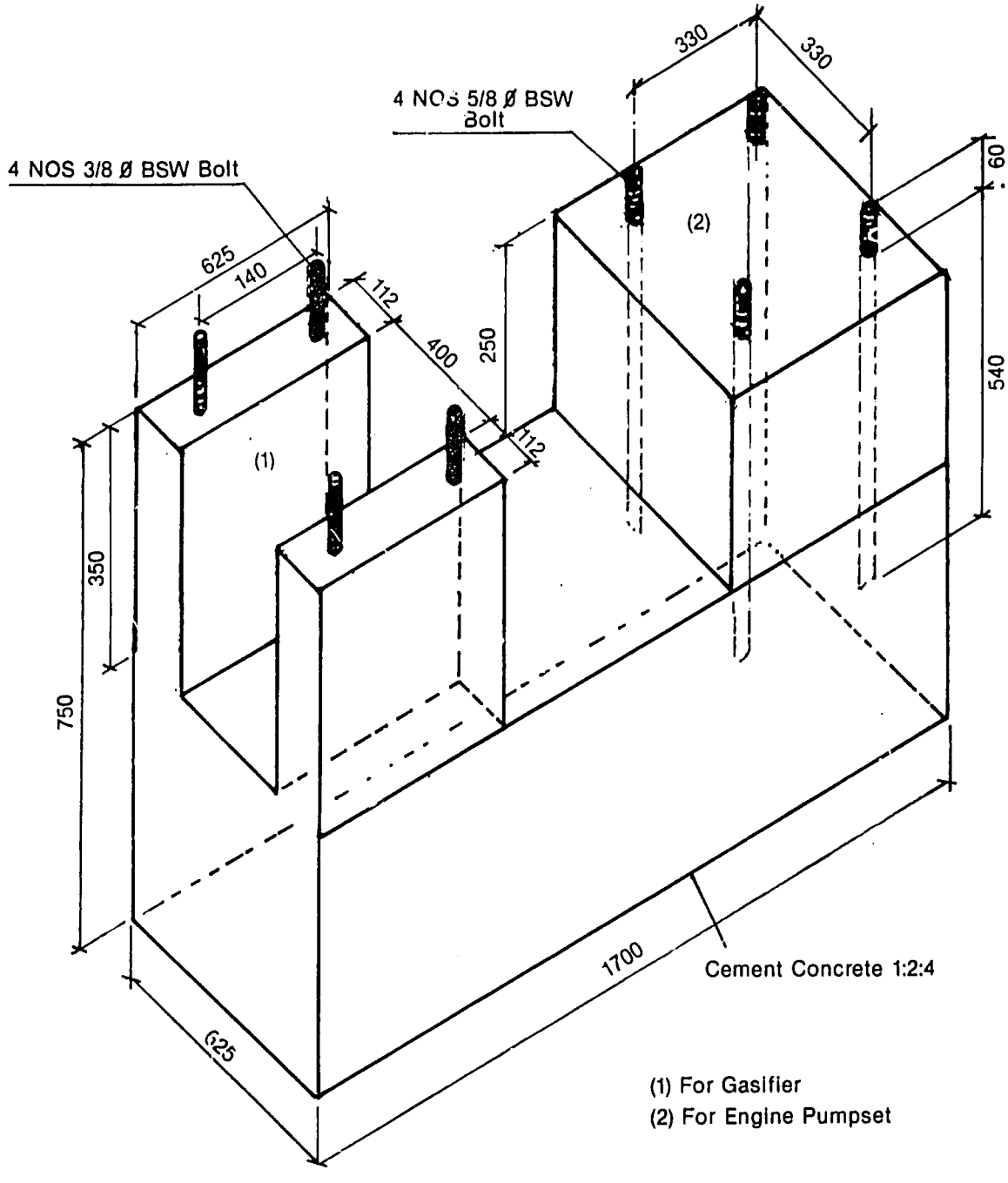

(Dimensions in mm)

12

Figure 4-3
General View of the Gasifier System Installed on a Farm at Village Jorh

Figure 4-4
G-50 Model Gasifier System Installed at Jorh

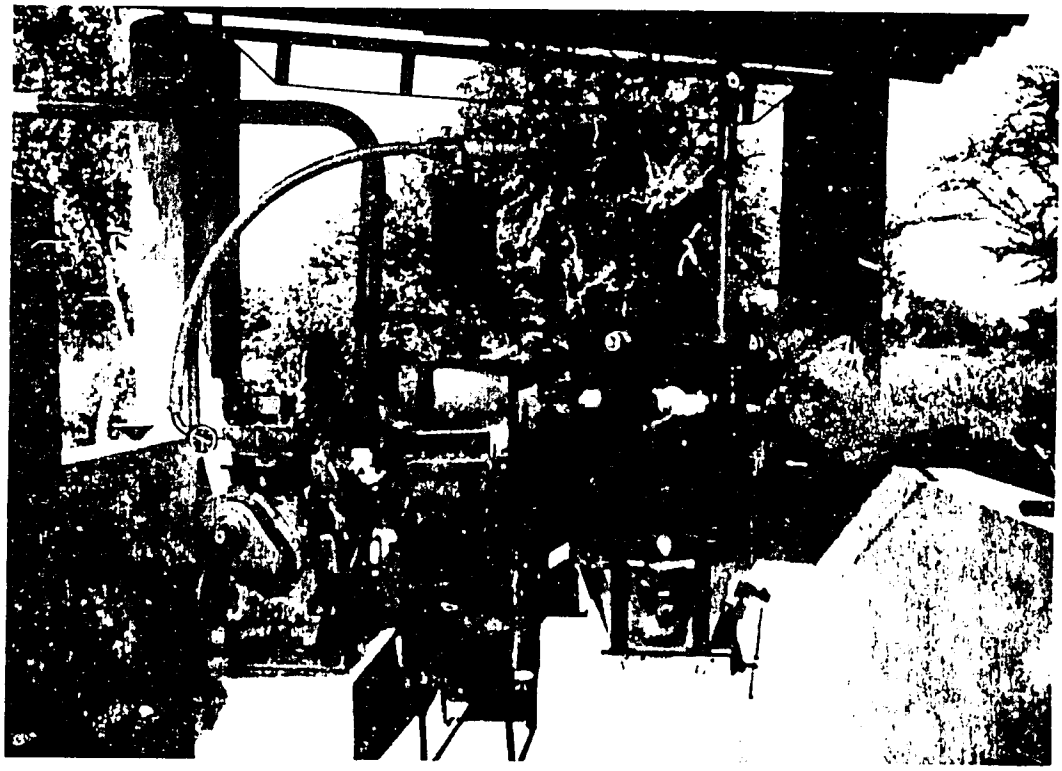

The field performance of both original and modified JSEI gasifier-engine systems is evaluated using data collected during two representative operating segments. These operating segments represent about 100 hours of field operation for either of the gasifier-engine systems. The performance evaluated for these two units (G-50 and G-55) is given in Tables 4-1 and 4-2, respectively. As shown in these tables, both units exhibited similar performance in identical field operating conditions. The diesel fuel replacement for the G-50 model ranged from 51 to 85 percent, whereas the corresponding replacement achieved with the G-55 model ranged from 65 to 75 percent. The wider range of diesel fuel replacement observed with model G-50 is a direct result of shorter daily operating schedules (2 to 4 hours) as compared to longer schedules (over 10 hours) maintained during the G-55 operation. The daily operating schedules of the gasifier pump sets were determined by the field irrigation requirement. The wood fuel consumption for both systems ranged from about 3.2 to 3.6 kilograms per hour. The average overall thermal efficiency (energy in the water pumped dividied by the energy input by wood and diesel fuel) observed during the entire field operation was about 6.0 and 7.0 percent for the G-50 and G-55 models, respectively.

The 1000 hours of successful field operation has demonstrated that, after proper training, local operators (i.e., farmers) can carry out the normal operation and maintenance tasks of the small gasifier-engine system. The farmer was completely satisfied with the day-to-day performance of this alternative irrigation system. Particularly, the system has served as an excellent backup to the existing grid connected irrigation pump, and helped the farmer in avoiding crop losses resulting from irregular grid power supply. The only shortcoming observed during the field operation was the inabilty of the engine pump system to lift water during summer months as the water level moved close to the maximum net positive suction head (34 feet) of the centrifugal pump. This problem, however, is common to all the centrifugal pump-based irrigation systems. Future demonstration units should consider this factor before installing the pump set on a fixed platform.

4.2 Field Testing Efforts of Projects A and B

This section describes the field testing efforts for the gasifier-engine system developed under Projects A and B.

4.2.1 Site Selection

The U.S. specialists had suggested the following technical and non-technical criteria for selecting a site for the field implementation of the gasifier-engine system.

15

TABLE 4-1
PERFORMANCE EVALUATION OF DEMONSTRATION UNIT AT JORH
ORIGINAL JSEI MODEL (G-50)

Run No.	Date	Total Time of Operation (hr)	Average Wood Consumption (kg/hr)	Average Diesel Consumption (l/hr)	Average Pump Discharge (l/hr)	Diesel Replacement (%)	Overall* Thermal Efficiency (%)
1.	18-06-85	5.8	3.4	0.22	12.6	80	6.0
2.	19-06-85	3.1	3.4	0.16	12.8	85	6.0
3.	20-06-85	4.7	3.4	0.27	12.8	75	6.0
4.	22-06-85	6.1	3.4	0.31	12.6	72	6.0
5.	24-06-85	2.2	3.4	0.54	12.8	51	6.0
6.	25-06-85	1.2	3.4	0.35	13.0	68	6.0
7.	26-06-85	4.0	3.4	0.27	12.8	75	6.0
8.	28-06-85	2.5	3.4	0.33	13.1	70	6.0
9.	30-06-85	3.8	3.4	0.14	12.8	77	6.0
10.	01-07-85	4.7	3.4	0.22	13.0	80	6.0
11.	02-07-85	4.0	3.4	0.44	12.8	60	6.0
12.	03-07-85	4.7	3.3	0.38	12.5	65	6.0

*The thermal efficiency was rounded off to the nearest decimal point

TABLE 4-1 (Concluded)
PERFORMANCE EVALUATION OF DEMONSTRATION UNIT AT JORH
ORIGINAL JSEI MODEL (G-50)

Run No.	Date	Total Time of Operation (hr)	Average Wood Consumption (kg/hr)	Average Diesel Consumption (l/hr)	Average Pump Discharge (l/hr)	Diesel Replacement (%)	Overall* Thermal Efficiency (%)
13.	04-07-85	3.1	3.3	0.43	13.1	61	6.0
14.	05-07-85	2.7	3.3	0.33	11.5	70	6.0
15.	06-07-85	9.7	3.3	0.36	10.0	67	6.0
16.	08-07-85	4.1	3.3	0.33	13.7	70	6.0
17.	09-07-85	2.6	3.3	0.31	13.5	72	6.0
18.	10-07-85	0.2	3.3	0.44	12.9	60	6.0
19.	11-07-85	3.7	3.6	0.36	14.8	67	6.0
20.	12-07-85	1.0	3.6	0.27	10.0	75	6.0
21.	15-07-85	5.5	3.6	0.35	13.0	68	6.0
22.	18-07-85	1.7	3.6	0.45	12.7	59	6.0
23.	20-07-85	6.1	3.6	0.38	12.6	65	6.0
24.	21-07-85	7.0	3.6	0.42	12.5	62	6.0

*The thermal efficiency was rounded off to the nearest decimal point

TABLE 4-2
PERFORMANCE EVALUATION OF DEMONSTRATION UNIT AT JORH
MODIFIED JSEI MODEL (G-55)

Run No.	Date	Total Time of Operation (hr)	Average Wood Consumption (kg/hr)	Average Diesel Consumption (l/hr)	Average Pump Discharge (l/sec)	Diesel Replacement (%)	Overall* Thermal Efficiency (%)
1.	31-12-86	10.3	3.5	0.38	12.7	65	7.0
2.	02-01-86	15.5	3.5	0.37	12.7	66	7.0
3.	07-01-86	8.3	3.5	0.33	12.6	70	7.0
4.	09-01-86	12.1	3.5	0.35	12.5	68	7.0
5.	10-01-86	14.7	3.4	0.38	12.5	65	7.0
6.	11-01-86	6.5	3.4	0.35	12.5	68	7.0
7.	12-01-86	7.5	3.4	0.34	12.6	69	7.0
8.	13-01-86	10.5	3.4	0.33	12.6	70	7.0
9.	15-01-86	8.1	3.2	0.30	12.6	73	7.0
10.	16-01-86	2.0	3.2	0.27	12.8	75	7.0
11.	17-01-86	15.7	3.2	0.37	12.6	66	7.0
12.	18-01-86	10.0	3.2	0.36	12.5	67	7.0
13.	19-01-86	7.1	3.2	0.29	12.7	74	7.0
14.	21-01-86	6.1	3.2	0.27	12.7	75	7.0

*The overall thermal efficiency was rounded off to the nearest decimal point

Technical Criteria

- The water level in the well must be between 10 and 20 feet. Draw-down during pumping must not lower the water to more than 25 feet below pump inlet.

- The site should preferably have the "dugwell" so that the existing pump system can be the "fall back" if the demonstration system fails. If a "tubewell" at the site is the only source of irrigation water, then provision should be made to switch back to the existing drive within about one-half hour.

- The ditch system should have capacity to handle the pump delivery with a minimum of 4 hp at engine (preferred rate is for 5 hp at engine).

- The seasonal irrigation pumping requirement should be no less than 100 hours of engine operation.

Non-technical Criteria

- Availability of suitable biomass feedstock

- Willingness of the farmer to have the demonstration plant installed

- Proximity to IIT

- Presence of a local organization to assist the IIT staff in working with the farmer

Project A and Project B team members have included some additional points for consideration in selecting the site. Both team members have chosen five sites (villages) for installing the unit. After making a comparative rating, the project team members recommended three sites, Acheja, Pootkhurd, and Sankrod, for final approval from the DNES. The details of site selection analysis are summarized in Table 4-3.

Based on the results of the site selection analysis presented in Table 4-3, the DNES had finally approved village Sankrod as the suitable site for field testing of the gasifier-engine-pumpset unit.

4.2.2 Site Preparation and Construction

The principal investigators of Project A and Project B, after mutual discussions, entrusted the job of constructing a suitable shed at the Sankrod site to Dr. T. R. Rao from Project A and Dr. K. Pal from Project B. Both teams equally shared the cost of site preparation and construction.

TABLE 4-3
CRITERIA FOR DEMONSTRATION SITE SELECTION

	Sites				
	Masudpur	Sultanpur	Achija	Pootkhurd	Sankrod
I. Technical Criteria:					
a) Adequate water level in well	X	X	+	+	+
b) Adequate provision for backup irrigation system	+	+	+	+	+
c) Adequate ditch system capacity	X	+	+	+	+
d) Irrigation pumping requirement of more than 100 hours of engine operation	X	X	+	+	+
II. Non-technical Criteria:					
a) Availability of suitable biomass feedstock	+	+	+	+	+
b) Willingness of the farmer to have the demonstration plant	+	+	+	+	+
c) Proximity to IIT	8-10 km	45 km	45 km	45 km	48 km

+ Indicates satisfactory rating
X Indicates unsatisfactory rating

TABLE 4-3 (Concluded)
CRITERIA FOR DEMONSTRATION SITE SELECTION

	Sites				
	Masudpur	Sultanpur	Achija	Pootkhurd	Sankrod
II. Non-technical Criteria (Concl'd):					
d) Presence of a local organization to assist the IIT in working with the farmer	+	X	+	+	+
III. Additional Points Considered by Projects A and B Team:					
a) Number of dug wells	1	1	3	3	3
b) Number of tube wells	5	5	5-7	100	200
c) State in which the demonstration site is located	Delhi	Delhi	UP	Delhi	UP
d) Bus facility	+	+	+	+	+
e) Workshop (repair) facility	X	X	X	+	+
f) Board facility	X	X	X	+	+
g) Labor facility	+	+	+	+	+

+ Indicates satisfactory rating
X Indicates unsatisfactory rating

The site preparation work started after obtaining funds from DNES. A formal plan of the shed and layout for the equipment was prepared. The construction work began after getting approval of the plan and layout from the principal investigators of the two projects. A floor plan for the field installation is given in Figure 4-5.

The shed was constructed out of brick with floor area measuring 13 feet by 17 feet. The foundation was also made up of bricks two feet below ground level. The top of the shed is covered with cement sheets. There are three rolling shutter-type doors (6 1/2 feet by 8 feet, 3 1/2 feet by 8 feet, 3 1/2 feet by 8 feet) and four mild steel framed windows with sheetmetal covers (5 feet by 4 feet, 5 feet by 4 feet, 6 feet by 4 feet) to provide adequate cross ventilation. A small tank (5 feet by 4 feet by 3 feet) was made outside the shed to store fuel (i.e., charred corn cobs) and a similar tank was made to hold water delivered from the pump. Adjacent to the water tank a small open duct was constructed to route water flow to the field. A V-notch weir was fitted in the duct for measuring the water flow rate.

The gasifier unit and the engine-pump set are fixed with proper foundation as shown in Figure 4-5. The tube well located just outside the shed was connected with pipes/fittings to the pump through the wall so as the delivery pipe from the pump to the water tank. The gasifier and engine set were also suitably interconnected. The gasifier and thermo-separator were fitted with instruments for measuring flow rates, pressure drops, and temperatures. The flow meters and the thermocouples were calibrated to give directly the values of flow rates and temperatures. The V-notch was calibrated to give a direct water flow reading. The diesel consumption rate was directly obtained from a suitably calibrated chart.

4.2.3 Training of the Local Operator

An instruction manual comprising system description, operation, maintenance, and safety about the gasifier unit was prepared by the Project A team. The local operator was trained based on the instructions given in the manual. The local operator was given actual training about a week on the startup and shutdown operations. Normal operating problems were simulated deliberately so that the operator got hands-on experience in the trouble-shooting of the system.

After a week of guided operation, the operator was allowed to run the system independently. Particular emphasis was placed in acquainting the operator with the associated safety hazards of the producer gas generator system. Signs and notices in local languages at selected locations in the test area were posted to warn the operator, as well as local inhabitants. The operator was also given training to collect data from the instruments provided with the system. A data sheet was prepared in the local

92

Figure 4-5

Floor Plan for the Gasifier-Engine System Installed at Sankrod

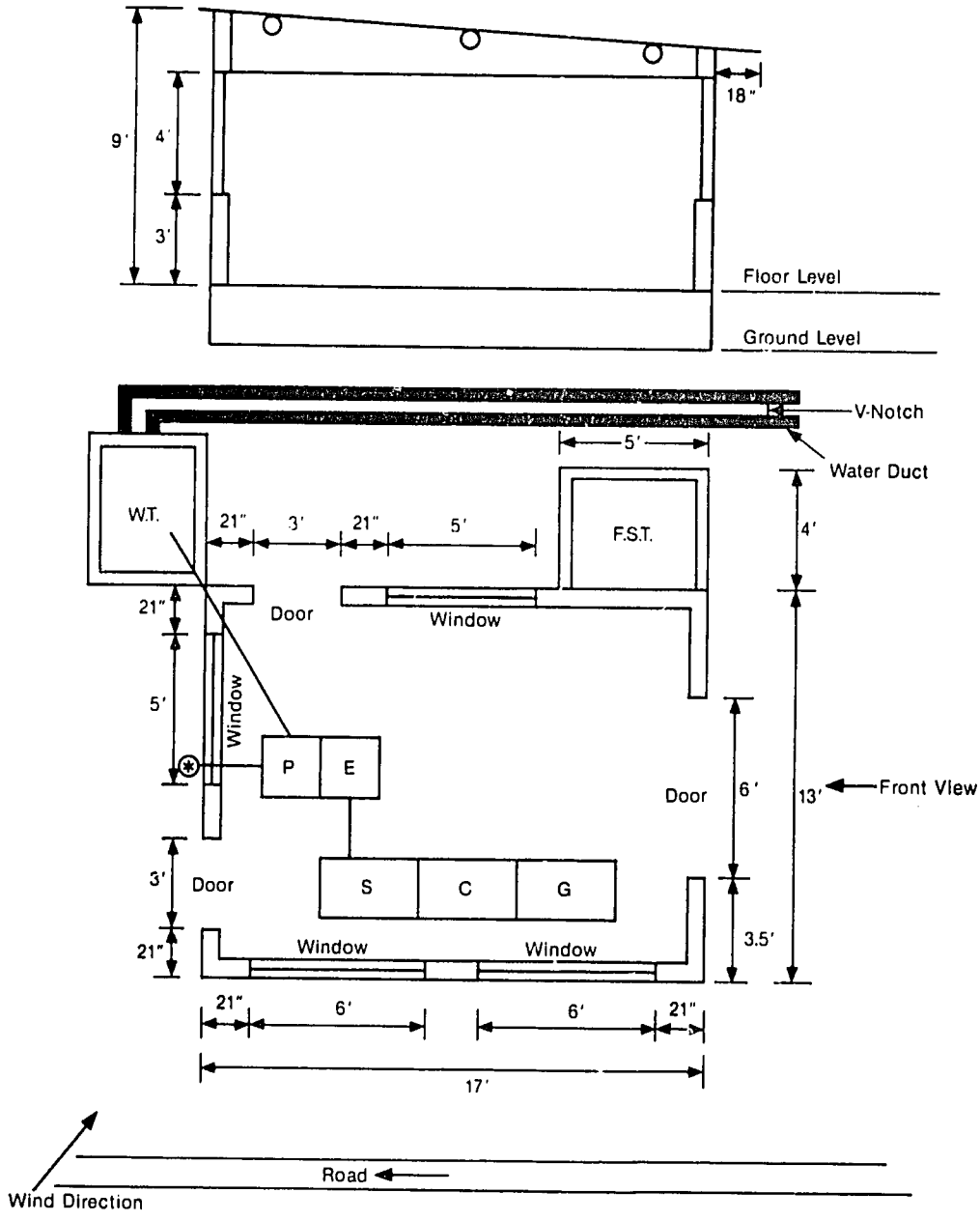

W.T. - Water Tank
F.S.T. - Fuel Storage Tank
S - Filter Drum
P - Pump
E - Engine
G - Gasifier
C - Cyclone Separator
* - Tube Well

language. During his training cycle, sample data logs were filled out to illustrate the data recording procedures.

Arrangements were made to have IIT technicians make frequent visits to the site to ensure proper operation and maintenance of the system. These visits also served to review the data logs and to obtain data for performance analysis at IIT.

4.2.4 Field Unit Performance

By December 10, 1986, the system had accumulated 100 hours of field operation. Data collected during 100 hours of field operation are given in Table 4-4. As shown in Table 4-4, the system during the field operation exhibited consistent performance, achieving a diesel fuel replacement of over 60 percent. The overall thermal efficiency during this period of operation is estimated to be about 7.0 percent. The efficiency is estimated by the ratio of energy contained in the pumped water to that provided by the charred corn cobs and diesel fuel. As indicated earlier, the overall thermal efficiency of the system is reduced primarily because of poor operating efficiencies (less than 45 percent) of the centrifugal pumps commonly used for lifting irrigation water in India. The system efficiency, based on the engine torque output, however, is estimated to be about 17 percent. Thus, for applications other than lifting irrigation water, i.e., generation of electric power, significantly high (about 15 percent) overall thermal efficiency can be achieved.

4.3 Comparative System Performance

In this subsection the field performance of the gasifier-engine systems is compared with the respective laboratory performance. The comparative performance for the system developed under Project C is given in Table 4-5. The G-55 model gasifier-engine system exhibited a similar performance, both in the laboratory as well as field operations. The average diesel fuel replacement was about 70 percent, whereas the overall thermal efficiency of the system was about 7.0 percent. The system efficiency, based on engine power output, was estimated to be about 15 percent.

The field performance of the gasifier-engine system developed under Projects A and B is compared with the performance obtained in the laboratory in Table 4-6. As indicated in this table, the field performance of the system, as measured by the diesel fuel replacement and overall thermal efficiency, is better than that achieved during the laboratory testing. The significant improvement observed in the overall thermal efficiency during the field operations resulted from the use of new diesel-engine-pumpset as opposed to an old pumpset used in the laboratory tests.

TABLE 4-4
FIELD OPERATING DATA AND SYSTEM PERFORMANCE

Date	Total Time of Operation (hrs)	Average Consumption of Charred Fuel (kg/hr)	Average Diesel Consumption (litre/hr)	Average Pump Discharge (litre/sec)	Diesel Fuel Replacement (%)	Overall* Thermal Efficiency
17-11-86	10	2.2	0.40	13.0	67	7.0
26-11-86	9	2.2	0.53	12.8	54	7.0
27-11-86	8	2.2	0.48	13.5	61	7.0
28-11-86	8	2.2	0.48	13.9	61	7.0
29-11-86	9	2.2	0.47	13.9	61.8	7.0
30-11-86	10	2.2	0.43	13.9	65.4	7.0
1-12-86	10	2.2	0.41	13.9	66.9	7.0
3-12-86	8	2.2	0.41	13.9	66.9	7.0
5-12-86	11	2.2	0.45	13.9	63.3	7.0
7-12-86	10	2.2	0.41	13.9	63.3	7.0
8-12-86	7	2.2	0.39	13.9	68.3	7.0
Total Hours = 100						

*Thermal efficiency is rounded off to the nearest decimal point.

TABLE 4-5
COMPARATIVE SYSTEM PERFORMANCE: GASIFIER-ENGINE SYSTEM
DEVELOPED UNDER PROJECT C
(G-55 Model)

Performance Parameter	Laboratory	Field
Total time of operation (hrs)	70	400
Average wood consumption (kg/hr)	3.5	3.5
Average diesel consumption (l/hr)	0.33	0.33
Average gas temperature at the gasifier outlet (°C)	200	200
Average gas/air mixture temperature (°C)	35	35
Average total pressure drop across the gas cleanup system (mm H_2O)	63	63
Average pump discharge (l/sec)	15.3	12.5
Total head (m)	9.6	11.86*
Water power (kW)	1.44	1.46*
Engine BHP (kW)	3.2	3.2
Diesel fuel replacement (%)	70	70
Overall thermal efficiency	6.8	7.0

*Calculated values

TABLE 4-6
COMPARATIVE SYSTEM PERFORMANCE: GASIFIER-ENGINE SYSTEM DEVELOPED UNDER PROJECTS A AND B

Performance Parameter	Laboratory	Field
Total time of operation (hrs)	50	100
Average fuel consumption (kg/hr)	2.5	2.25
Average diesel consumption (l/hr)	0.46	0.444
Average gas temperature at the gasifier outlet (°C)	350	350
Average gas/air mixture temperature (°C)	35	35
Average pressure drop across the gasifier system (mm of H_2O)	60	59
Average pump discharge (l/sec)	12.75	13.89
Total head (m)	9.96	11.37*
Water power (kW)	1.245	1.55*
Engine BHP (kW)	2.5	3.1
Diesel fuel replacement (%)	58	63.5
Overall thermal efficiency	5.7	7.40

*Calculated values

A cross-comparison of the field performance (Tables 4-5 and 4-6) of the systems developed under Projects A, B, and C reveals that these systems, even though processing different biomass feedstocks, achieve similar performance. The overall thermal efficiency of the system developed under Projects A and B is estimated based on the energy input from the charred corn cobs. If the energy losses in the charring process are considered, the overall thermal efficiency of the system developed by Projects A and B will be slightly lower than that achieved with the system developed under Project C. However, it should be recognized that the fuel preprocessing required for the system developed under Project A permits the utilization of agricultural residue, an abundantly available resource in India in downdraft gasifiers. In addition, such a preprocessing (i.e., pyrolysis and pelletization) scheme also permits use of a simple gas cleanup system.

Considering the diversity of biomass resources in India, the two gasifier-engine system designs that are developed and field tested under this collaborative program will form the basis of future commercial applications. However, before such commercial application begins, extensive field testing of these two systems should be conducted to quantify the socio-economic impacts resulting from future wide-scale application of this technology in India. Specific recommendations in this regard are given in Section 6.0.

5.0 U.S. PROJECT TEAM CONTRIBUTIONS

The successful development and field testing of small gasifier-engine systems in India, to a large extent, was achieved because of a very close working relationship maintained between the Indian and U.S. biomass experts through the entire length of the U.S./India Cooperative Alternate Energy Program. The U.S. project team (See Table 1-1, Section 1.0) has made significant contributions to the technical and management aspects of the three selected biomass conversion projects during all phases of project implementation, monitoring, and evaluation. The technical and management inputs of the U.S. team were divided into three major areas:

- Project pre-implementation
- Project implementation
- Project monitoring and data evaluation

The following subsections highlight the major U.S. inputs.

5.1 Project Pre-Implementation

The major inputs in this area focused on providing engineering and technical information relative to the implementation of selected biomass conversion projects in India. A phased implementation strategy was developed to facilitate project execution and monitoring efforts. Specific project requirements such as types of systems, list of instruments, and analytical equipment and personnel training schedules were finalized.

5.1.1 Technical Information Exchange

Technical discussions among the U.S. and Indian specialists were held during the first workshop in New Delhi, November 7-11, 1983.[7] The main purpose of these discussions was to exchange information on the state-of-the-art of small biomass gasification technology, with particular emphasis on ongoing research, development, and demonstration (RD&D) activities both in the U.S. and India. The U.S. project team made three technical presentations that were specifically prepared to illustrate the RD&D status of small-scale wood and biomass gasifier-engine systems in the United States. Also, a systems engineering approach was presented for selecting and implementing wood and biomass energy projects in developing countries. A detailed documentation of these presentations is available in the proceedings of the first workshop.[8]

In addition to the above mentioned presentations, the U.S. project team also arranged a demonstration of small biomass-based gasifier engine-generator system by Pyrenco, Inc., (Prossor), Washington, a

U.S. gasifier manufacturing firm. The small gasifier-engine generator system (net output of less than 1 kW) was specially fabricated and shipped to India for the workshop. A picture of the gasifier-engine generator system is shown in Figure 5-1. The load on this system consisted of four 200-watt electric bulbs. The gasifier ran on pelletized biomass fuel, specifically pelletized sawdust, for several one-hour demonstration runs.

The technical presentations, coupled with the hardware demonstration, provided an excellent overview of the state-of-the-art of small gasifier-engine technology in the U.S. The overview of the U.S. experience was extremely useful for appreciating the technical and institutional efforts required to initiate and successfully implement the selected gasifier-engine projects in India.

5.1.2 Project Implementation Approach

A major contribution made by the U.S. project team during the pre-implementation efforts included the development of a phased implementation approach for the selected biomass projects. An overview of this approach is given in Figure 5-2 and a detailed description is presented in Section 2.0 of this report. The work to be performed under the multi-year project was divided into three phases, each phase being approximately 12 months long, which included work areas progressing from design and development, system fabrication, and laboratory testing to field operation. Based on this project implementation approach, both the U.S. and Indian project teams developed detailed technical work plans that identified individual project activities and their respective schedules.[4] The phased implementation approach was very effective in monitoring the technical efforts under each project activity and thus led to the successful completion of the selected biomass conversion projects.

5.1.3 Project Requirements

The U.S. project team also participated in specific discussions relating to the initiations of the three projects. These discussions resulted in the following action items:

- Use of compression ignition (CI) instead of spark ignition (SI) engines
- Purchase of small test gasifier engine systems from the U.S.
- Preliminary list of analytical equipment to be procured from the U.S.
- Preliminary technical personnel training schedule

Figure 5-1
U.S. Gasifier-Engine-Generator System Demonstrated During the First Workshop

Figure 5-2
Project Implementation Approach

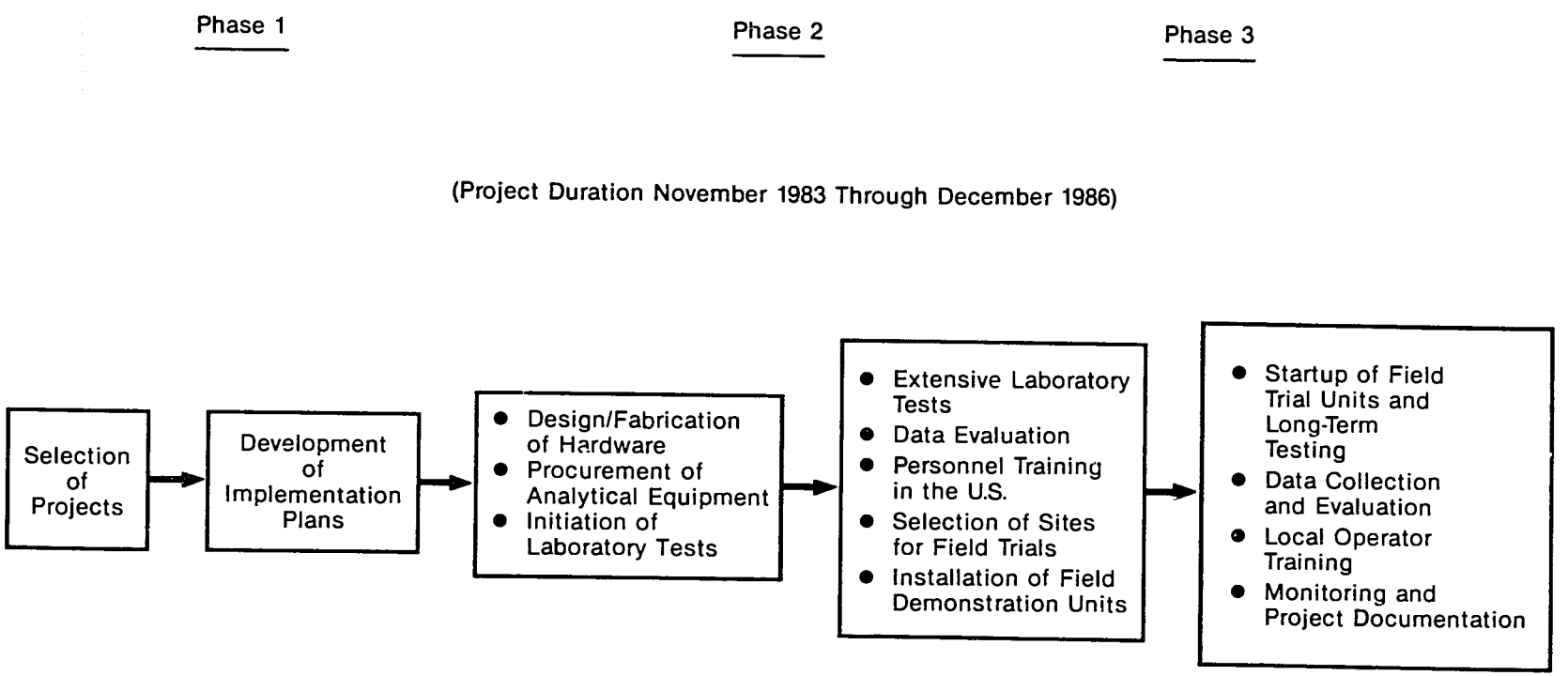

The use of CI (diesel) engines instead of SI engines was an important decision reached by the U.S. and Indian project teams. The SI engines can burn the producer gas from the gasifier and achieve 100 percent replacement of the petroleum-based fuels, either gasoline or kerosene. On the other hand, the CI engines (or diesel engines) require 10-20 percent diesel as pilot fuel along with the producer gas. However, small diesel or CI engines, as indicated earlier, are exclusively used in India for pumping irrigation water. Because the retrofit of existing CI engines offered the highest potential for small biomass-based gasifiers in India, it was jointly agreed by the project teams that the proposed projects would primarily focus on retrofitting small diesel engines for dual-fuel producer gas applications.

Because Projects A and B at IIT were going to be linked during phase 2, special attention was given to their smooth initiation. For example, during the early part of the phase 1 work, members of Project B needed a gasifier and gas cleanup system to begin work on the diesel engine modifications; whereas Project A members needed experience in the design, operation, and testing of small gasifier systems.

In order that Project B's engine modification work would merge satisfactorily with Project A's gasifier development efforts, it was decided that during phase 1, both Projects A and B should use similar test gasifiers. The test gasifiers, along with the appropriate gas cleanup system, were procured in the U.S., and after appropriate performance testing, were shipped to India. A similar gasifier system was provided at the UMR for training selected Indian engineers.

A list of analytical equipment and instruments to be procured from the U.S. was prepared by the individual principal investigators. The U.S. project team reviewed the equipment list, and along with Indian counterparts, prioritized the list so that procurement of essential equipment could be initiated immediately. The original equipment lists for the three projects were divided into high and low priority categories. High priority items were those which were essential for carrying out the proposed projects, and therefore were to be procured during phase 1. The list of low priority items was to be reviewed during phase 2 and, depending on the individual project needs and budgetary constraints, specific items would be selected and procured for the respective projects.

Finally, at the end of the first workshop and subsequent discussions, the U.S. project team made site visits to assess the facilities, equipment, and to meet the technical personnel available to carry out the proposed projects. The site visits were particularly useful in assessing the level of U.S. technical assistance (i.e. equipment and consultancy) required for the three selected projects.

5.2 Project Implementation

The U.S. project team provided technical assistance in the design, construction, testing, and field installation of the pilot gasifier engine systems. Copies of state-of-the-art for small scale gas producer-engine systems[9] and the Swedish National Machinery Institute Report[10] on gasifier design and testing, were provided to the principal investigators of Projects A, B, and C. This reference material formed the basis for the design criteria of small biomass gasifier and gas cleanup systems. The major contributions of the U.S. project team are highlighted below:

- Equipment procurement
  - Developed engineering drawings for the test gasifiers to be used for phase 1 laboratory tests f r Projects A and B
  - Conducted performance tests and developed operating and maintenance procedures for the test gasifiers
  - Provided special analytical equipment and instrumentation to facilitate data monitoring and acquisition
- Personnel training
  - Designed a four week intensive hands-on training program for the selected Indian engineers from the three project teams
  - Trained six Indian engineers in the operation and maintenance, including data acquisition, of small biomass gasifier-engine systems
  - Arranged field visits to industrial biomass conversion plants
- System testing and field installation
  - Assisted projects A and B in initiating integrated gasifier-engine operation
  - Assisted in the design and implementation of laboratory and field test procedures
  - Reviewed the design and operation of the gasifier-engine system developed under Project C
  - Assisted in the development of site-selection criteria for field testing

Details of U.S. project team inputs in this area are given in the following subsections.

5.2.1 U.S. Equipment and Instrumentation

As indicated earlier, in order to expedite the phase 1 work of Projects A and B at IIT, an operational gasifier-engine system was procured in the United States. The unit was set up and operated at the Gasification Research on Wastes (GROW) facility at UMR.

A schematic diagram of the U.S. test gasifier-engine system is shown in Figure 5-3. The gasifier is a down-draft system designed to process low-moisture biomass feedstocks, such as wood chips, dry sawdust, etc. A cross-section of the gasifier and gas cleanup system is shown in Figure 5-4. The cleanup unit consisted of a spray column, packed-bed scrubber, and a demister. The cleaned and cooled gas from the cleanup unit is sucked into the engine for combustion.

After the preliminary operation proved acceptable, the U.S. biomass specialists performance-tested the system using granulated charcoal, lump charcoal, and dry sawdust. The details of the performance tests were presented during the second annual workshop in New Delhi, India.[12] The summary of U.S. test gasifier-engine system performance is given in Table 5-1. Each run in this table represents approximately 2 to 4 hours of operation.

The first 4 runs were made with a 2 kW single-phase motor being driven by a 12 hp engine. Later the electric motor was exchanged for a 3 kW, three-phase, 208 volt motor. The tests included sawdust, wood chips, and charcoal operation. Runs 5 through 8 were made with a partially blocked scrubber, reducing the engine output. Motor output varied from 1.37 to 3.04 kW. The overall thermal efficiency* of the system ranged from 8 to 14 percent. The gas heating value varied from 2.5 to 4.3 MJ/nm^3 (63 to 108 Btu/scf). The dry sawdust produced the highest value and the chunk charcoal the lowest, but the efficiencies were higher for the charcoal. The charcoal was broken into dime size (3/8 inch) pieces and the fines produced during the crushing were included as part of the fuel. In the cases where coarse material was used, a gasket and cover placed on the fuel opening improved performance. During run 11, the air flow difference between covering the top and leaving it open was observed. The air flow through the tuyeres was reduced significantly when the cover was removed. The cover used in the later runs was a simple rubber sheet approximately 1/8 inch thick. A cover with an air tight gasket will aid and improve the operation with these fuels. An inserted thermocouple monitored the gasification temperatures. During run 11, a stable gasification temperature of approximately 1800°F was measured and maintained.

---

*The overall thermal efficiency of the system is measured as the ratio of the electric energy output of the motor to the energy input by the solid fuel.

Figure 5-3
Schematic Diagram of U.S. Test Gasifier-Engine System

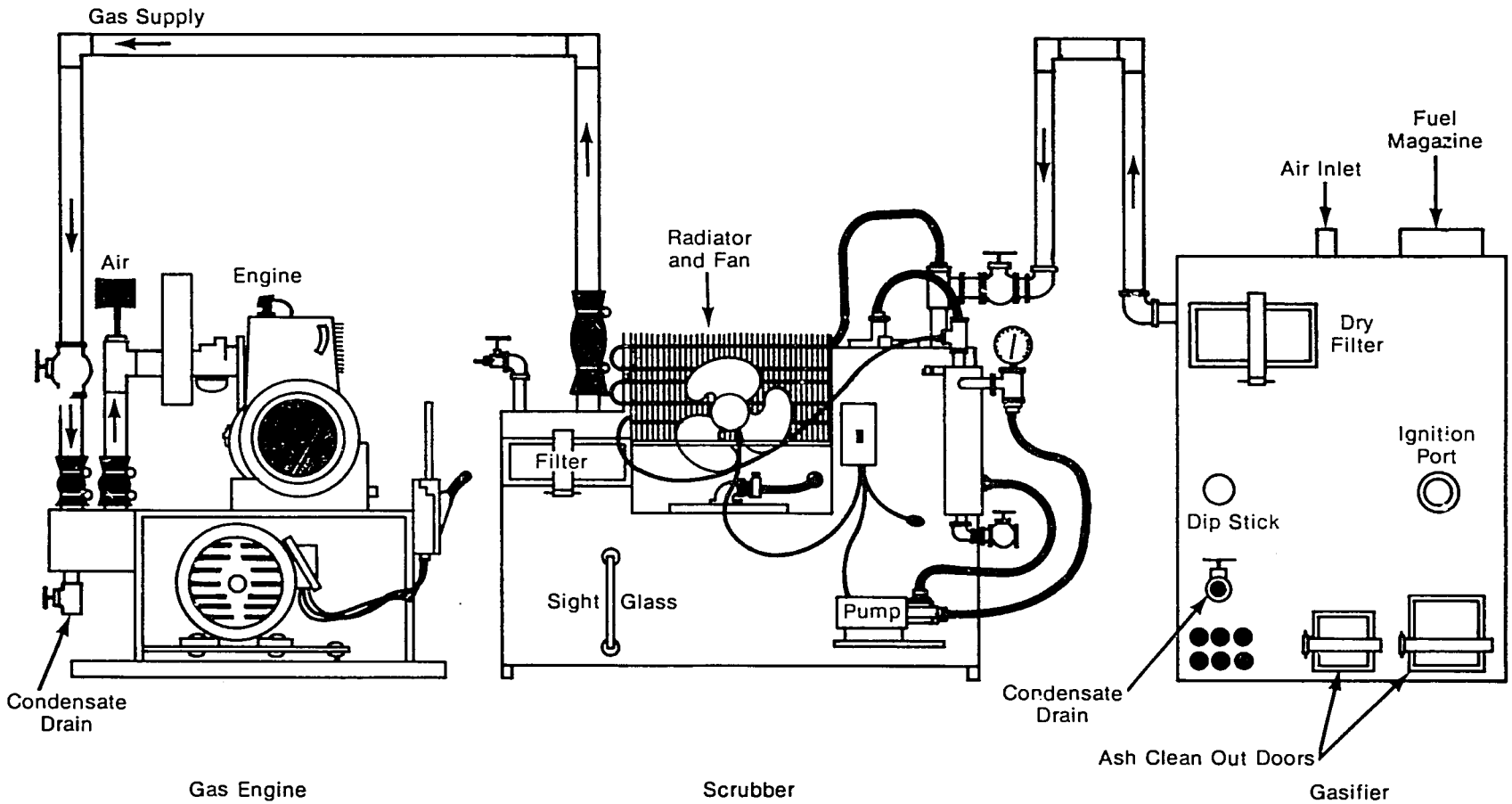

Figure 5-4
Cross-Section of U.S. Test Gasifier and Gas Cleanup System

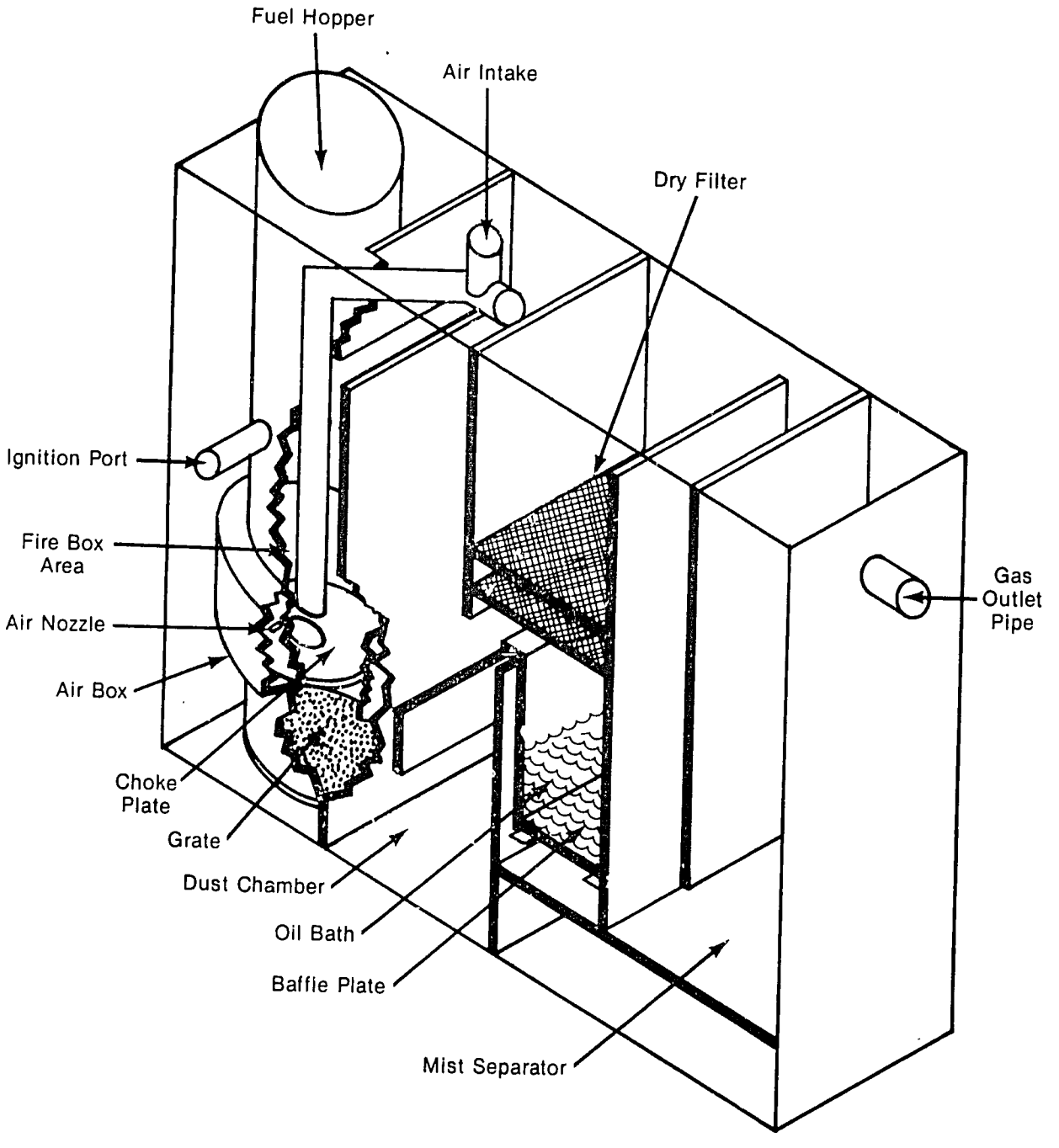

TABLE 5-1
PERFORMANCE OF U.S. TEST GASIFIER-ENGINE SYSTEM

Run Number	Fuel		Energy Input	Energy Output		Overall System Efficiency
	Rate lb/hr	Type	(Btu/hr)	(kW)	Btu/hr	(%)
1	7.4	Dry Sawdust	55400	2.16	7370	13.3
2	6.7	Charcoal (G)	70350	1.98	6760	9.6
3	4.4	Charcoal (G)	46200	1.94	6620	14.3
4	4.9	Charcoal (G)	51450	2.05	7000	13.6
5	3.2	Charcoal (G)	37662	1.4	4778	12.7
6	3.1	Charcoal (G)	36496	1.37	4675	12.8
7	3.3	Charcoal (G)	38245	1.44	4915	12.9
8	3.2	Charcoal (G)	37079	1.4	4778	12.9
9	4.4	Charcoal (L)	51654	1.83	6238	12
10	5.3	Charcoal (L)	61681	1.95	6671	10.8
11	16	Dry Sawdust	123088	3.04	10388	8.3

G = Ground
L = Lump

The system performance was satisfactory, and it was recommended that two additional gasifier-engine systems be purchased for Projects A and B teams. The actual equipment order consisted of:

- Two S-series gasifiers
- Two cleanup systems
- One electric start engine

The gasifier-engine systems were first delivered to the gasification test facility at UMR. At this facility, the new units were equipped with thermocouples, flow meters, and the necessary readout equipment. After initial startup tests, the units were crated and sent to India. An operation, maintenance, and safety manual was prepared and also sent along with the shipment. This manual is presented in Appendix B. Engineering drawings of the gasifier and gas cleanup system were prepared and copies were sent to respective project teams. The following recommendations were made with respect to the installation and operation of the U.S. test gasifier engine system:

- The test gasifier system was procured to provide hands-on operating experience to Project A and B teams. Therefore, it should only be operated in the respective project laboratory.
- This system was not recommended for field testing and/or operation because of the complexity of the cleanup unit.
- It was suggested that a new top for the gasifier be designed.
- A dry cleanup or simplified cleanup system should be used with charcoal fuels.

Both Project A and B teams have operated the U.S. test gasifier system during the early part of phase 1 work. The test gasifier did serve its purpose in providing an early hands-on experience in running a small gasifier-engine system. The Project B team not only used the test gasifier for conducting some long-term engine endurance tests, but also adapted the compact configuration of the U.S. test gasifier to their own design. A photograph of the gasifier-engine system developed by the Project B team is given in Figure 5-5. This system was developed as an adjunct effort by project B team during the phase 3 work of this U.S./India collaborative energy program. It was recommended by the U.S. biomass specialists that the system developed by the Project B team be field tested under a separate DNES-funded program to obtain long-term field performance data.

Figure 5-5
Photograph of Gasifier-Engine System Developed by Project B

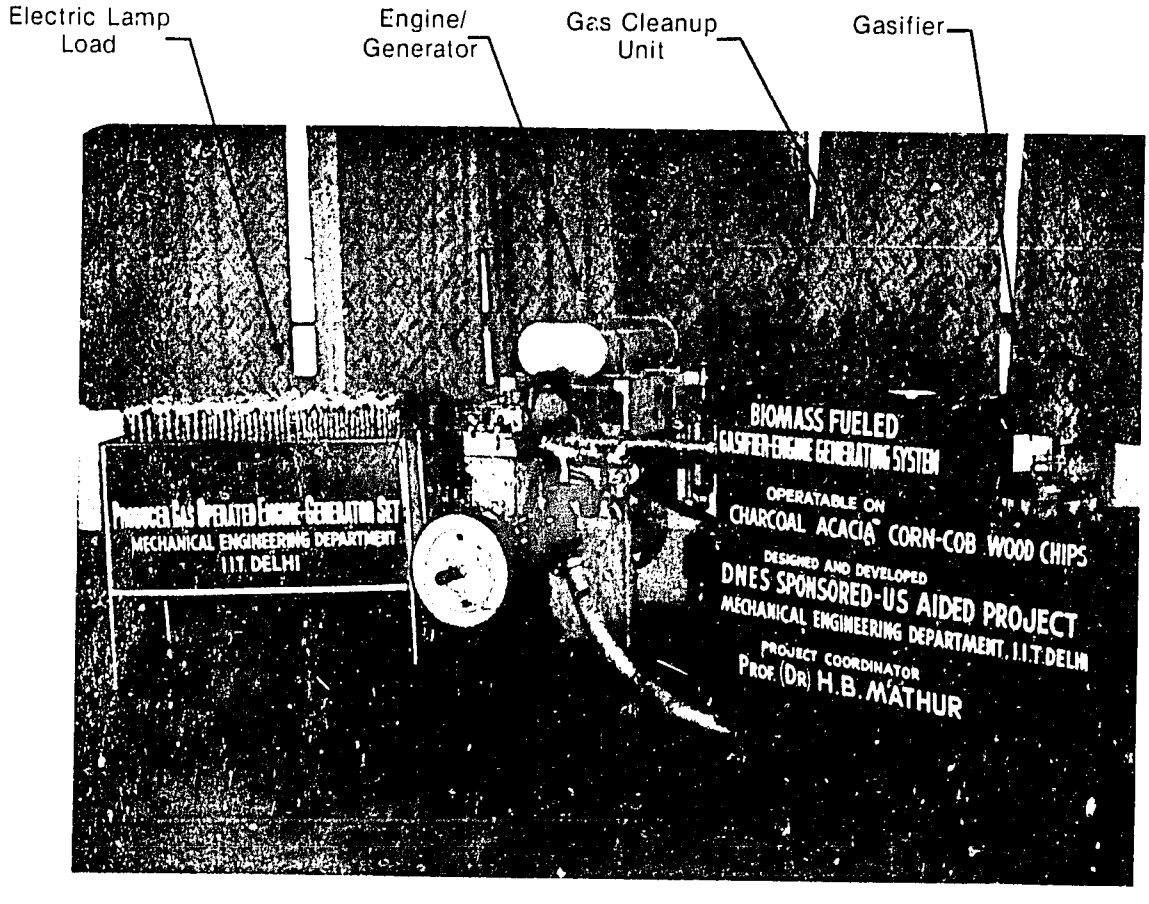

In addition to the test gasifier-engine system, the U.S. project team developed technical specifications and procured special analytical equipment and instrumentation from the United States to facilitate data monitoring and acquisition. A list of analytical equipment provided from the U.S. for Projects A, B, and C is given in Tables 5-2, 5-3, and 5-4, respectively.

5.2.2 Personnel Training

During phases 1 and 2 of the collaborative project, two training sessions were successfully conducted in the U.S. Each training session was designed to train three Indian engineers, one from each project, in the operation and maintenance of small biomass gasifier-engine systems. Leading U.S. biomass conversion R&D centers at the UCD and UMR were used to conduct the training. The trainees spent approximately two weeks at these R&D centers. In addition, several field visits were arranged to observe the operation of industrial biomass-based energy conversion plants. The highlights of the training programs at these centers are given below.

5.2.2.1 Training at University of California, Davis (UCD). At UCD, the design and operational features of two biomass-based gas producer-engine generator systems were explained to the trainees. The small producer gas generator system was coupled to an SI engine of rated capacity of about 6 kW. The engine was running a 3.5 kW alternate current generator. The gas cleanup train for this small gasifier-engine system consisted of a wet filter, a dry filter, and a final filter guard. The larger gasifier-engine system used a fluid-bed, as opposed to the moving bed design used in the smaller system gasifier. This gasifier included an elaborate gas cleanup system consisting of:

- A cyclone to remove ash and char particles
- Hot fabric filter (i.e., baghouse) to remove finer ash particles
- Water scrubber to cool the gas and remove condensable vapors
- Demister to remove liquid particulates
- A dry scrubber packed with bark to further remove the liquid particulates

The producer gas from the gas-cleanup system was combusted in a spark ignition engine which was modified to run on 100 percent producer gas. The engine was coupled to a 75 kW generator.

101

TABLE 5-2
LIST OF EQUIPMENT PROVIDED FROM THE UNITED STATES FOR PROJECT A

Item	Function	Model Number	Vendor
1) Carle Gas Chromatograph	Gas Analysis	04-158-A	Hach/Carle Loveland, CO
2) Integrator	Reducing Chromatograph Output	3392A	Hewlett Packard
3) Standard Bottles (1-A Cylinder) 1-Certified	G.C. Calibration	Composition H_2 4% CO_2 16% C_2H_4 1.5% C_2H_6 .5% O_2 2% N_2 47% CH_4 5% CO 20% C_3H_8 4%	Matheson Gas
4) Data Acquisition/Monitoring and Recording Unit Accessories	Continuous Data Recording Reduction and Display	H.P. 3421A	Hewlett Packard
(a) Ten Channel Multiplexer Assembly	Scan Thermocouples	Option 020	Hewlett Packard
(b) HP-IB Interface	Allows Use of Controller	Option 201	Hewlett Packard
(c) Microcomputer	Data Reduction/Control	85-B	Hewlett Packard
(d) Printer/Plotter	Data Display/Hard Copies	Option 562	Hewlett Packard
(e) Option 335	220V, 50Hz Operation		Hewlett Packard

TABLE 5-2 (Continued)
LIST OF EQUIPMENT PROVIDED FROM THE UNITED STATES FOR PROJECT A

Item	Function	Model Number	Vendor
5) Pressure Transducers	Continuous Measurement of Absolute, Differential, and Gauge Pressures		Micro-Switch (Honeywell Div.)
(a) Pressure Range 0-10" Water	Measure Differential Pressure Across the Gas Cleanup Train	164PC01D37	Micro-Switch
(b) 0-20" Water	Measure Differential Pressure Across the Gasifier	162PC01D	Micro-Switch
(c) 0-10 psig (2)		142PC15D	Micro-Switch
(d) 0-30 psia		142PC30A	Micro-Switch
6) Thermocouples: Different Sizes 4,6,8,12", Two of Each Size	Measure Temperatures at Different Locations	K-Type Mego-pak Assembly 2K2M15-R and 2K6M14-R-12-3-T	Honeywell Instrumentation
7) Adiabatic Bomb Calorimeter (220V/50Hz) Oxygen	Finding HHV of Solid Fuels	04-349-2 (220V/50HZ)	Fisher Scientific Springfield, NJ International Div.
8) High Temperature Furnace	Ash Fusion Analysis	Lucifer Melt-Master Elevator Furnace Model 6000	Lucifer Furnaces

TABLE 5-2 (Concluded)
LIST OF EQUIPMENT PROVIDED FROM THE UNITED STATES FOR PROJECT A

Item	Function	Model Number	Vendor
9) Laminar Flow Meters/ Electronic Transmitters (2) 1 1/2" Pipe Size 5-40 SCFM	Measure Flow Rates of Producer Gas and Air		Meriam Instruments
10) Elapsed Time Indicator (Non-resettable)	Gasifier Time Run	6X139	Grainger
11) CO, Personal Monitors	Monitor CO Concentrations	Part No.: 469-379	Mine Safety Appliances Pittsburg, PA

TABLE 5-3
LIST OF EQUIPMENT PROVIDED FROM THE UNITED STATES FOR PROJECT B

Item	Function	Model Number	Vendor
1) Carle Gas Chromatograph	Gas Analysis	04-158-A	Hach/Carle Loveland, CO
2) Integrator	Reducing Chromatograph Output	3392A	Hewlett Packard
3) Standard Bottles (1-A Cylinder) 1-Certified	G.C. Calibration	Composition H_2 4% CO_2 16% C_2H_4 1.5% C_2H_6 .5% O_2 2% N_2 47% CH_4 5% CO 20% C_3H_8 4%	Matheson Gas P.O. Box 96 Manhatten Road Joliet, IL 60434
4) IMEP Meter/ Accessories	Monitoring of Engine Performance	6602	AVL North American, Inc.
(a) High Resolution Optical Crank Angle System	Monitoring of Engine Performance	360C/600	AVL North American, Inc.
(b) Single Channel Charge Amplifier		3059	
(c) Quartz Pressure Transducer and Adapters	Monitoring of Engine Performance	8Qp500Ca	AVL North American, Inc.

TABLE 5-3 (Continued)
LIST OF EQUIPMENT PROVIDED FROM THE UNITED STATES FOR PROJECT B

Item	Function	Model Number	Vendor
(d) Transducer Cooling Unit	Same as Above		Ralston Engineering
(e) Hydraulic Pressure Calibration Device			
(f) Timing Light		19062	Electro-Specialities, Inc.
5) Pressure Transducers	Continuous Measurement of Absolute, Differential, and Gauge Pressures		Micro-Switch (Honeywell Div.)
(a) Pressure Range 0-10" Water	Measure Differential Pressure Across the Gas Cleanup Train	164PC01D37	Micro-Switch
(b) 0-20" Water	Measure Differential Pressure Across the Gasifier	162PC01D	Micro-Switch
(c) 0-10 psig (2)		142PC15D	Micro-Switch
(d) 0-30 psia		142PC30A	Micro-Switch
6) Thermocouples: Different Sizes 4,6,8, 12", two of each size	Measure Temperatures at Different Locations	K-Type Mego-pak Assembly 2K2M15-R and 2K614-R-12-3-T	Honeywell Instrumentation
(a) Hand-held Surface Thermocouple	Measure Surface Temperature	TK2-K-871	Omega Engineering 10 Omega Drive Box 4047 Stanford, CT 06907

TABLE 5-3 (Concluded)
LIST OF EQUIPMENT PROVIDED FROM THE UNITED STATES FOR PROJECT B

Item	Function	Model Number	Vendor
7) Laminar Flow Meter/ Electronic Transmitter	Measure Flow Rates of Gas and Air		Meriam Instruments
MISCELLANEOUS:			
8) Elapsed Time Indicator	Keep Track Operational Time	6X139	Grainger
9) CO, Wall-Mounted Sensor	Monitor CO Concentrations	570	Mine Safety Appliances Pittsburg, PA
10) CO, Personal Monitors	Monitor CO Concentrations	Part No.: 469-379	Mine Safety
11) Transformer (G.C. 220V/ 50Hz) 115 Watts	Reduce Voltage	09-497EE	Fisher Scientific

TABLE 5-4
LIST OF EQUIPMENT PROVIDED FROM THE UNITED STATES FOR PROJECT C

Item	Function	Model Number	Vendor
1) Data Acquisition Monitoring and Recording Unit Accessories	Continuous Data Recording, Reduction and Display	H.P. 3421A	Hewlett Packard
(a) Ten Channel Multiplexer Assembly	Scan, Thermocouples	Option 020	Hewlett Packard
(b) HP-IB Interface	Allows the Use of Controller	Option 201	Hewlett Packard
(c) Hand-held Calculator Computer	Data Reduction Control	Option 541	Hewlett Packard
(d) Digital Cassette Drive	Data Input	Option 561	
(e) Printer/Plotter	Data Display Hard Copies	Option 562	Hewlett Packard
(f) 220V, 50Hz	Hard Copies	Option 335	Hewlett Packard
2) Carle Gas Chromatograph	Gas Analysis	04-158-A	Hach/Carle
3) Integrator	Reduction of Chromatograph Output	3392 A	Hewlett Packard
4) Calibration Gas Cyclinder	G.C. Calibration	Composition H_2 4% CO_2 16% C_2H_4 1.5% C_2H_6 0.5% O_2 2% N_2 47% CH_4 5% CO 20% C_3H_8 4%	Matheson Gas

TABLE 5-4 (Continued)
LIST OF EQUIPMENT FROM THE UNITED STATES FOR PROJECT C

Item	Function	Model Number	Vendor
5) IMEP Meter Accessories	Monitoring of Engine Performance	6602	AVL North American, Inc.
(a) High Resolution Optical Crank Angle System		360C/600	American, Inc.
(b) Single Channel Charge Amplifier		305	American, Inc.
(c) Quartz Pressure Transducer and Adapters		8QP500CA	American, Inc.
(d) Transducer Cooling Unit		D100	American, Inc.
(e) Hydraulic Pressure Calibration Device			Ralston Engineering
(f) Timing Light		19062	Electro-Specialists, Inc.
6) Torque Transducer	To Measure the Torque Produced by the Engine Shaft	1604-2K	LeBow Products EARN Corporation
7) Non-Contact Digital RPM Indicator (Option for Torque Transducer)	Measure Engine RPM	7540	EARN Corporation
8) Portable Gas Calorimeter	Measure Heating Value of the Producer Gas	Sigma Water Flow Model 103	COSA Instruments
9) Laminar Flow Meters/ Electronic Transmitter	Measure Flow Rate of Producer Gas and Air		Meriam Instruments

TABLE 5-4 (Continued)
LIST OF EQUIPMENT PROVIDED FROM THE UNITED STATES FOR PROJECT C

Item	Function	Model Number	Vendor
10) Hand-held Surface Thermocouple	Measure Surface Temperature	TKZ-K-871	Omega Engineering 1 Omega Drive P.O. Box 4047 Stanford, CT 06907
(a) Thermocouples Different Sizes 4,6,8,12", two of each	Measure Temperature at Different Locations	K-type Mego Pak Assembly 2K2MI5-R & 2K6M14-R-12-3-T	Honeywell Instrumentation
11) Pressure Transducers	Continuous Measurement of Absolute, Differential, and Gauge Pressures		Micro-Switch (Honeywell Dev.)
(a) Pressure Range 0-10" Water (2)	Measure Differential Pressure Across the Gas Cleanup Train	#164PC01D37	Micro-Switch
(b) 0-20" Water (2)	Measure Differential Pressure Across the Gasifier	162-PC01D	Micro-Switch
(c) 0-10 psig (2)		14PC15D	Micro-Switch
(d) 0-30 psia		14PC30A	Micro-Switch
MISCELLANEOUS:			
12) Cold Finger Condenser	Produce Isokinetic Gas Samples		
13) Elapsed Time Indicator	Keep Track of Operational Time	6X139	Grainger

TABLE 5-4 (Concluded)
LIST OF EQUIPMENT PROVIDED FROM THE UNITED STATES FOR PROJECT C

Item	Function	Model Number	Vendor
14) CO, Wall-Mounted Sensor	Monitor CO Concentrations	570	Mine Safety Appliances, Pittsburg, PA
15) CO, Personal Monitors	Same as Above	Part No.: 469-379	Mine Safety Appliances
16) Ohaus Moisture Meter	Measure Moisture Content	6010H, Order No. 01-950-21 220V, 50Hz	Fisher Scientific
17) Wiley Intermediate Cutting Mill	Prepare Samples for Proximate Analysis	08-338-3 220V, 50Hz	Fisher Scientific
18) Platform Balance	For Measuring Wood Consumptions	02-117	Fisher Scientific

Schematic diagrams of the gasifier-engine systems used in the training program are presented in Figures 5-6 and 5-7.

Both systems were completely instrumented to collect operating data such as temperatures, pressures, gas analysis, gas and air flow rates, electric generator output, engine pressure traces, etc. Both systems were set up for performance tests that provided excellent opportunity for the trainees to obtain hands-on experience in the operation of the gasifier-engine system, including instrumentation and data acquisition systems. The experience gained with the UCD data acquisition system proved to be extremely valuable and helped the Indian project teams A and B in setting up similar systems at their respective laboratories. A Hewlett-Packard data acquisition and control unit (HP 3421A/41CV) was used at the UCD laboratory. This system consisted of:[14]

- 41 CV computer with 2.2 K bytes of memory
- 82160 A HP-IL module for serial communication
- 82182 A Time module for system timing
- 444684 data acquisition pac with 3421A central ROM and two key boards
- 82101 A digital cassette drive with 30 K bytes of storage
- 82162 A printer/plotter for hard copy records.

The system was capable of sensing DC volts, resistance, and frequency signals and had up to 30 channels (i.e., 3 multiplexers). Signals could be printed and/or recorded on a microcassette. With the help of the data controller (i.e., 41CV hand held computer), the signals were transformed into actual temperatures, pressures, rpm, flowrates, etc. It is worthwhile to mention that the data controllers or computers procured for Projects A and C are significantly faster than the 41 CV unit used at UCD. For example, the 85B computer procured for Project A can read up to 11 readings/sec as compared to 2 readings/sec rate for the 41CV hand held computer.[14]

A detailed instrumentation diagram for the UCD rice husk gasifier engine system is given in Figure 5-8. The instrumentation diagram provided vital information with respect to the interface requirements between various system instruments, and the data acquisition and control subsystems. The trainees were familiarized with the instrumentation diagram to facilitate eventual installation of similar systems in India. Also, the computer program used for data logging and reduction was studied.

Figure 5-6
Schematic Diagram of Small Rice Hull Gasifier-Engine System at UCD

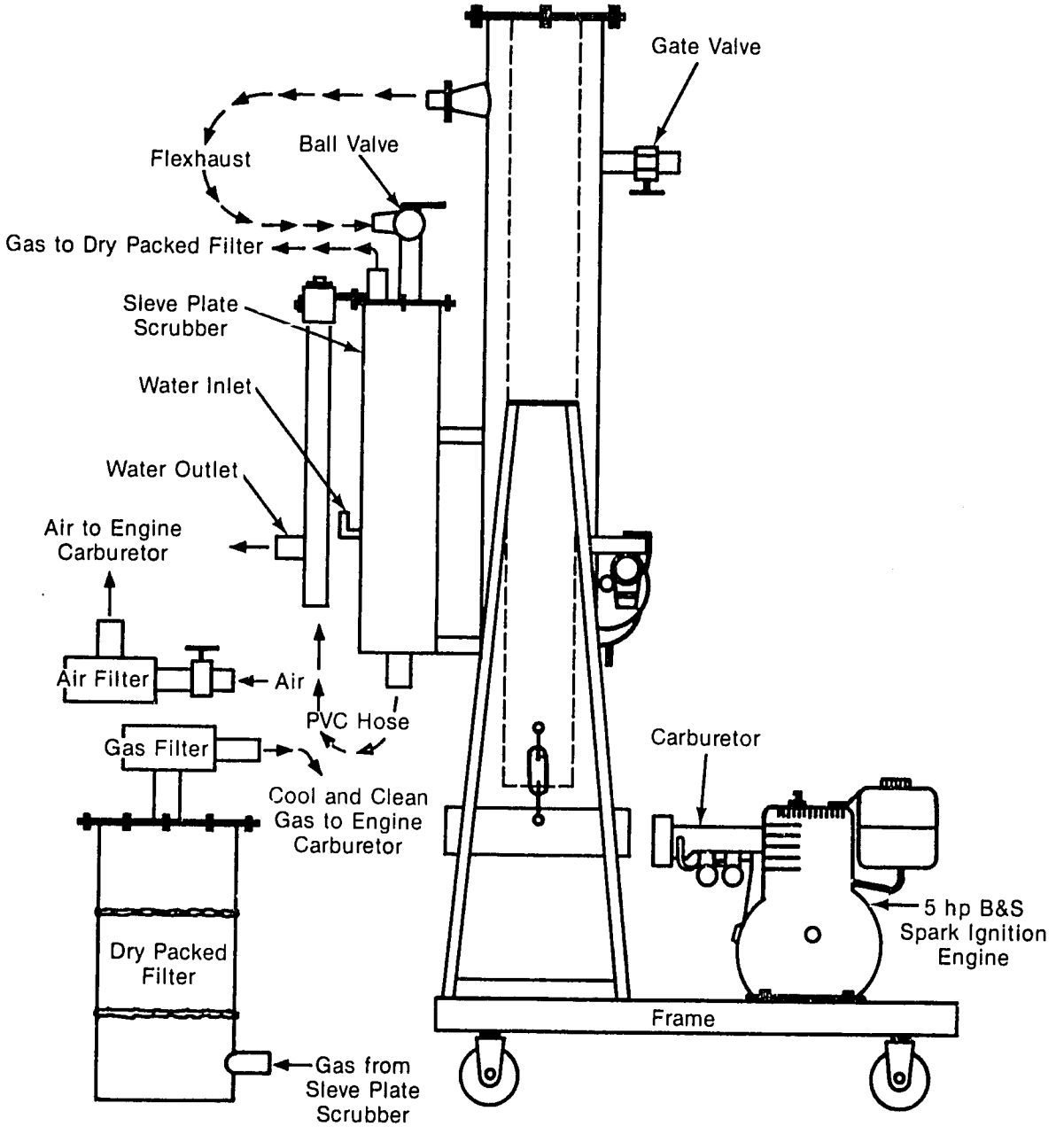

Source: Reference 12

Figure 5-7
Fluidized Bed Gas Producer and Gas Conditioning System at UCD

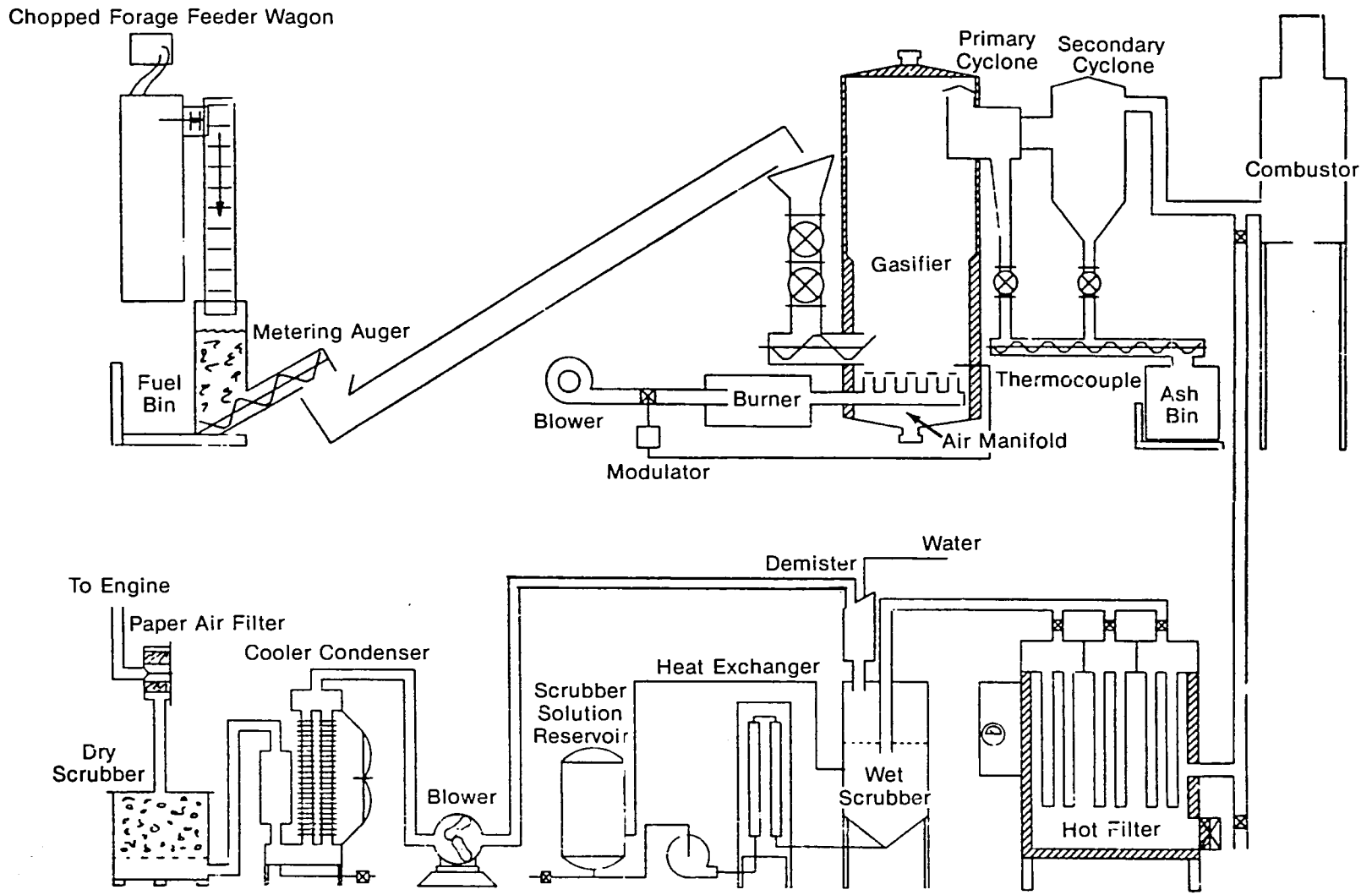

Source: Reference 13

Figure 5-8
Detailed Instrumentation Diagram for the UCD Rice Husk Gasifier-Engine System

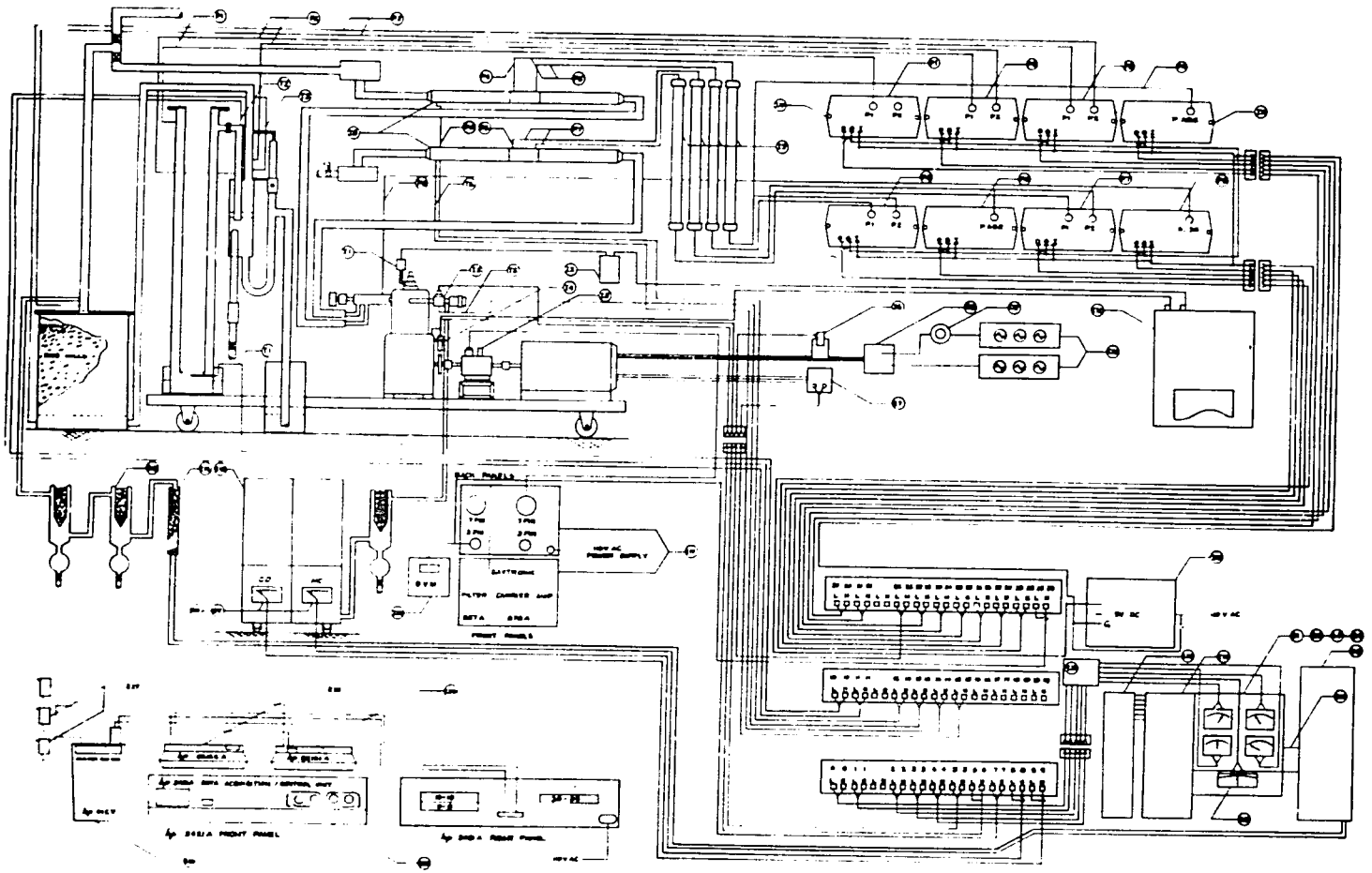

Source: UC DAVIS Department of Agriculture Engineering

Particular attention was paid to have the trainees carefully review the pressure transducer calibration, gas analysis calibration, and engine cylinder head pressure measurement procedures. In addition, a separate analytical work segment was designed so that the trainees could carry out proximate, bomb calorimeter and fusion analyses of several sample biomass fuels. During this segment of the training, the trainees also used an HP 85 computer program to conduct engine performance analysis by developing pressure versus crank angle diagram.

The trainees were provided with copies of a learning guide to the UCD Biomass Gasification Project. The learning guide contained the following:

- Program write-up and listings for HP-3421A/41CV data acquisition and control system
- Ultimate analysis procedure for solid fuels (ASTM standard D3176-74)
- Proximate analysis procedure (ASTM standards D3172-73 and D-3176-73)
- Ash fusibility analysis (ASTM standard D1857-68) procedures
- Moisture content analysis (ASTM standard D 2016-74) procedures
- Pressure/volume analysis for IC engine performance (IC engine cylinder pressure-time traces recorded by PCB pressure transducer and GOULD waveform recorder)

5.2.2.2 Training at University of Missouri, Rolla (UMR). The purpose of the training at UMR was to allow the trainees to become familiar with the procedures and techniques of operating and testing small gasifier-engine systems. The trainees operated several types of gasifiers at the Gasifier Research on Waste (GROW) facility located approximately two miles from the UMR campus. Most of the gasifiers at this facility were of a fluidized-bed type. A fixed-bed unit, about 3.5 kW capacity, similar to the U.S. test gasifier provided for Projects A and B, was extensively operated by the Indian engineers during the training period at UMR. Even though several biomass fuels were used, the bulk of the testing was conducted using wood and wood-derived fuels (i.e., charcoal, sawdust, etc.).

During the training at UMR, special efforts were made to provide hands-on training in the operation, repair, and calibration of the Hach/Carle gas chromatograph and integrator system. This system is extensively used in the United States to analyze the composition of low-energy content (or low-calorie) fuel gases. The main features of the system were:

- Plotting of the chromatogram
- Integrating the area under the chromatogram
- Automatic operating of the G.C. valves
- Printing of the compositions and effective heat value or energy content of the producer gas

A similar gas analysis system was provided to all three projects in India. Therefore, the hands-on training at UMR was extremely useful and facilitated the installation and operation of a similar system in the respective Indian laboratories.

In addition to the gas analysis, the trainees were trained in determining the tar (i.e., high molecular phenolic compound) content of the product gas. The analytical techniques for measuring tar, even though not standardized, are important in determining the performance of a gasifier/gas cleanup system. Presence of tar in the producer gas can severely impact the normal operation of an IC engine. At UMR, the trainees used a spectrophotometric technique to determine the quantity of tar in the producer gas.

5.2.2.3 Field Trips. During the course of training in the U.S., the Indian trainees were taken to industrial and institutional facilities to observe the operation of biomass-based energy conversion plants. For example, while at UCD, the trainees visited a California state heating and cooling plant in Sacramento that was using a fluidized bed gas producer and direct-fired plant for electricity generation from almond shell. A cogeneration plant fueled with walnut shell was visited at Stockton, approximately 40 miles from the UCD campus. Two industrial facilities in Missouri, Floyd Charcoal Briquette Plant in Salem, and a large fluidized-bed gasifier in Belle were also visited. These commercial operations demonstrated the design and operational principles used for large-scale biomass conversion plants in the United States.

In addition to the above-mentioned field trips, a special trip was arranged for the second group of Indian trainees to visit the engine test facility of Briggs and Stratton Corporation, a leading U.S. manufacturer of small IC engines in Milwaukee, Wisconsin. The purpose of this visit was to observe the small IC engine performance measurements using an AVL IMEP (Indicated Mean Effective Pressure) meter. The IMEP meter measures the cylinder pressure and uses an algorithm to numerically integrate to determine the indicated pumping work.[15] A computer program was developed by the Briggs and Stratton Company that allows the cylinder pressure data to be transferred from the IMEP meter to a Hewlett Packard personal computer for engine performance analysis.

The Briggs and Stratton program calculates engine performance parameters such as indicated mean effective pressure, indicated horsepower, brake horse power, pumping horse power, friction horsepower, specific fuel consumption, thermal efficiency, etc. The program also provides a list of pressure-volume data at a specified crank angle interval, including plots of pressure-volume, pressure-crank angle, and rate of pressure rise-crank angle diagrams.

The components for the Briggs and Stratton engine analysis system are presented in Table 5-5. The trainees had an excellent opportunity to closely review the experimental setup and observe the engine performance data acquisition and analysis. Similar engine performance analysis systems were procured for both Projects B and C to enhance the engine testing capabilities at the respective laboratories. Also, the Briggs and Stratton computer program, along with the instructional manual was purchased to facilitate the data acquisition and analysis.

5.2.3 System Design and Field Installation

The specific U.S. project team's inputs to the system design, development, and field testing tasks are described in this subsection.

5.2.3.1 Projects A and B. During the early part of the phase 2 work, the U.S. specialists worked with both Projects A and B teams to initiate the operation of the test gasifiers procured from the U.S. The initial operation of the test gasifier at the Project B laboratory was difficult and the quality of gas produced was not good. The major reason for the poor performance of this gasifier was misplacement of the gasifier grate. Once this problem was corrected the gasifier and the dual-fuel diesel engine operated satisfactorily. Later, as reported in Section 3.3, Project B successfully used the U.S. test gasifier for conducting relatively long-term engine performance tests. The operation of the test gasifier at Project A was not successful. Nevertheless, Team A members, including the technicians, gained considerable experience in the installation, start-up, shut-down and troubleshooting of small biomass gasifier-engine systems.

The first design of the gasifier to be fabricated under Project A was reviewed by the U.S. specialists. A schematic diagram of this design is presented in Figure 5-9. Major concerns of the U.S. specialists regarding suitability of this design for long-term testing were conveyed to the Project A team. Some of these concerns are given below:

- The ash grate and perforated screen enclosing the area above the ash port and below the throat (see Figure 5-9) were of an untested design for long-term operation.

TABLE 5-5
LIST OF EQUIPMENT: BRIGGS AND STRATTON
ENGINE PERFORMANCE ANALYSIS SYSTEM

- AVL model 6602 IMEP meter
- AVL model 3059 charge amplifier with excernal ground feature
- AVL model 360C/600 optical crank angle marker
- AVL model 3601 2031-1 pulse multiplier
- AVL model 8QP500C pressure transducer
- AVL model D100 transducer cooling unit
- Dead weight tester
- Modified Electro-specialties, Inc. model 19062 timing light
- (Optional) Hewlett Packard HD9845B computer with "IMEP" program on tape

Figure 5-9
First Gasifier Design Developed by Project A
(G-60 Model)

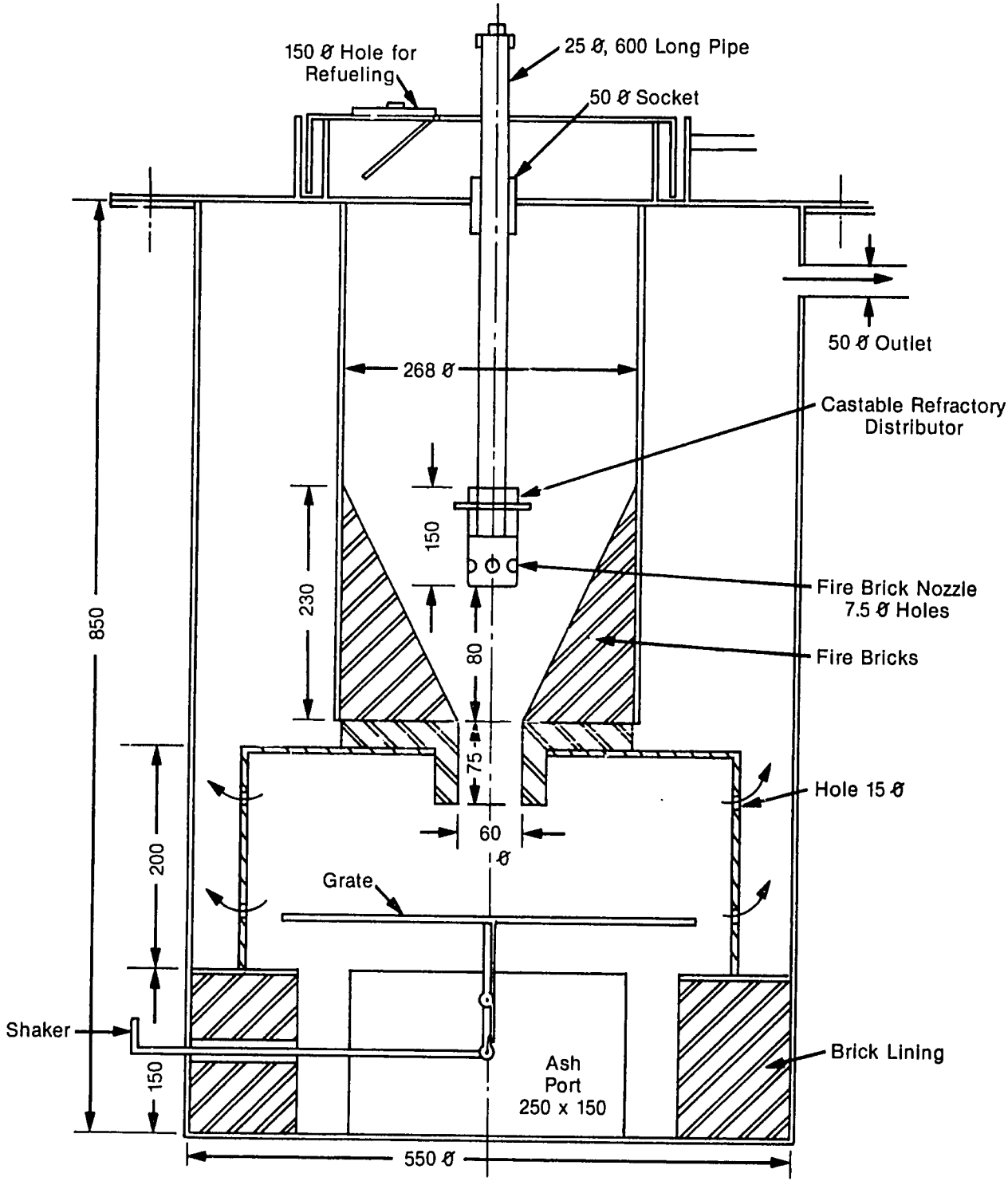

Notes: a) All Dimensions in are mm
b) Ø Refers to Outside Diameter

- The grate would increase the pressure drop across the gas producer and have a detrimental impact on the engine volumetric efficiency.

- The castable refractory tip on the central tuyere will have a very short life resulting from different thermal expansion coefficients.

It was recommended that Team A should develop a gasifier with side tuyere design similar to that developed by the Jyoti Solar Energy Institute under Project C. Based on this recommendation, Team A developed a workable small biomass gasifier as described in Section 3.2.

The most significant contribution made by the U.S. project team under the system testing sub-area was the initiation and expedition of integrated laboratory testing and subsequent field trials of the gasifier-engine system developed by Projects A and B teams at IIT, New Delhi, India. As indicated in Section 2.0 of this report, according to the original project plans,[5] after the completion of independent gasifier development and engine modification tasks, both Teams A and B were scheduled to begin integrated gasifier-engine tests in the laboratory during the latter part of phase 2. These tests were designed to check the performance of the integrated system before it was moved to the selected site for field trials.

In order to facilitate the initiation of the integrated laboratory testing and subsequent field trials, U.S. biomass specialists were in India for a period of about eight weeks. During this period, the specialists spent a significant amount of time working with both Projects A and B teams at IIT, Delhi, to immediately initiate the integrated gasifier-engine tests. The U.S. specialists developed a fast-track schedule for the eight week period to accomplish specific tasks pertaining to:

- Initiation of integrated laboratory gasifier-engine tests

- Collection and evaluation of laboratory test data

- Selection and preparation of field demonstration site

- Fabrication/procurement and assembly of the field test unit

- Checkout and performance testing of the field demonstration unit

The U.S. specialists suggested that a minimumum of 50 hours of laboratory operating data should be collected before the system is moved to the selected site for field trials. A set of testing and data collection procedures was provided to monitor the 50-hour integrated laboratory operation. The following step-wise procedure was suggested by the U.S. specialist for conducting continuous test segments of six to eight hours:

Test Run Procedure

1. Obtain diesel engine fuel consumption rate at 1,500 rpm on 100 percent diesel fueling.

2. Set the diesel fuel consumption at 30 percent of the value obtained in Step 1, after producer gas is first fed to the engine.

3. Observe the reduction zone temperature in the gas producer; if it stabilizes at 450°C or above, then engine BHP is satisfied at 30 percent diesel, and rpm for dual fueling is likely to be less than 1,500.

4. If the temperature in the reduction zone drops below 450°C, hold diesel rate constant, i.e., 30 percent, and adjust governor to give speed of 1,500 to 1,600 rpm.

5. Check for stable reduction zone temperature at or above 450°C. If this temperature cannot be held, then start Step 2 with 25 percent diesel consumption and continue through Step 5. The objective is to find diesel replacement and engine speed for maintaining a reduction zone temperature of 450°C or above.

Before initiating the sustained six- to eight-hour runs, the integrated system was operated for several short (less than four hours) runs. Based on the performance of the system during the short runs, the following modifications were recommended:

- Provision of insulation around the gasifier to eliminate heat losses

- Improvements in the ash collection and removal system

- Gasifier leak testing and sealing of internal flanges

- Close-coupling of gasifier and gas clean-up subsystems and engine pump to reduce excessive pressure drop

- Use of inclined manometer for increased sensitivity to flow measurements

The gasifier unit initially did not maintain a stable temperature, but placement of the high temperature insulation on the outside of the fire-box improved the situation. After the above modifications, both teams successfully operated the integrated system for over 50 hours before moving it to the field trial site.

During the eight-week period in India, the U.S. specialists also visited three possible sites near Delhi for conducting field trials for the system developed under Projects A and B. The following site selection criteria were developed by the U.S. specialists:

Criteria for Test Site Selection

- The water level must be between 10 and 20 feet and should not drop below 25 feet on drawdown at the end of a day-long pumping time.
- The site will preferably have a "dug well," so that the existing pump can be ready as a standby. If a "tube well" at the site is the only source of irrigation water, then provision should be made to switch back to the existing drive within one-half hour.
- The total irrigation requirement from the well should be at least 100 hours per season.
- Suitable agricultural residue feedstock should be available to sustain the fuel needs for the irrigation season.
- The site should be close to IIT.
- A local farmer must volunteer to participate in the demonstration tasks.
- There should exist organized efforts toward demonstrating other renewable energy technologies.

5.2.3.2 Project C. During phase 1 work, the U.S. specialists reviewed the design and operation of a small, wood-fired gasifier engine system that was developed by JSEI under a Ford Foundation Contract.[6] The U.S. specialists were satisfied with the design criteria used for fabricating this unit. In order to carry out a meaningful laboratory performance evaluation of this unit, special instruments and analytical equipment were procured for Project C during phase 2 (See subsection 5.2.1).

To facilitate the installation of the procured equipment, the U.S. specialists developed a detailed instrumentation diagram as shown in Figure 5-10. The JSEI downdraft gas producer and 5 hp dual-fuel diesel engine with direct connected centrifugal water pump are shown in the upper left-hand part of Figure 5-10. The gas producer and engine are mounted so that the gas producer is agitated by the engine vibrations. The tubes in the top center of the figure (marked 18) are laminar flow meters for measurement of the cool-clean gas and combustion air flows into the engine. The four vertical tubes shown in the upper right-hand part of the

Figure 5-10
Detailed Instrumentation Diagram for JSEI Gasifier-Engine System

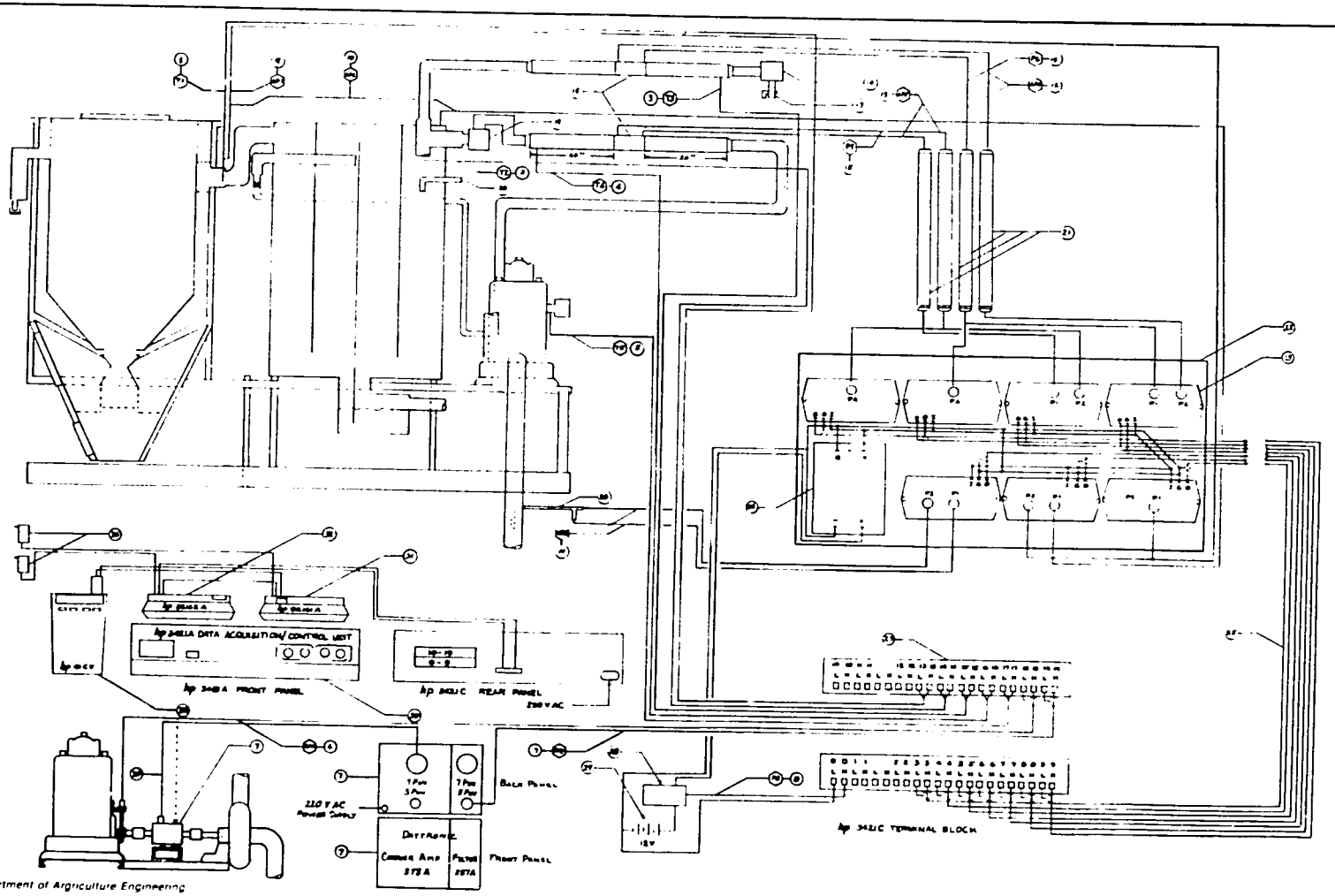

Source: UC/DAVIS Department of Agriculture Engineering

figure (marked 21) are 4-inch PVC tubes, 4 feet long with diffuser disks of polyfoam. These tubes serve to dampen intake manifold pressure surges and thus maintain a positive pressure-drop input to the pressure transducers (marked 23) shown below the four PVC tubes. The regulated power supply for the pressure transducers is shown by the rectangle (marked 24) on the left-hand of the lower 3 pressure transducers. Connections to the HP 3421A terminal blocks (marked 27) are shown above and to the left of the figure title block. In the lower left-hand part of Figure 5-10 is shown a side view of the engine to depict the torque transducer and its instrumentation. The data acquisition/process control system is shown above the last mentioned view of the engine.

The HP 41CV hand-held calculator programmed to sample and process data was replaced with an HP 71B hand-held calculator with programming for data sampling and processing. Process control programming was provided to sample data for a variable, preselected time schedule and verify adequate voltage from the 12 volt D.C. battery to operate the pressure transducer regulated power supply. A description of the data instrumentation points as indicated in Figure 5-10 is given in Table 5-6.

The instrumentation diagram developed for JSEI is based on an existing data acquisition and control system at the UCD (see Figure 5-8). The Indian trainees from the three projects were trained at UCD (as indicated in the earlier subsection) in the operational details of this data acquisition system.

The U.S. specialists also assisted the Project C team in developing and implementing laboratory and field data collection and procedures.

5.3 Project Monitoring and Data Evaluation

The successful implementation of the three biomass conversion projects under the U.S./India Cooperative Alternative Energy Program was largely achieved because of the effective monitoring of the progress of individual projects over the entire performance period. The close working relationship maintained between the U.S. and Indian project teams coupled with the detailed project plans developed at the begining of this program had greatly facilitated the project monitoring task. During the course of this program, project schedule slippage resulting from institutional and/or technical reasons, were detected immediately and prompt corrective actions were taken to ensure that the major goal of these projects, i.e. development and field testing of a small gasifier-engine system, was achieved. The corrective actions consisted of design modifications, expediting laboratory tests, and schedule revisions.

The U.S. project team assisted the Indian counterparts in developing data collection, monitoring, and evaluation procedures for both laboratory and field test units. Assistance was also provided in setting up standard

TABLE 5-6
DESCRIPTION OF DATA INSTRUMENTATION POINTS

a	b	c	
1	13	T1	Hot Gas temperature (^oC) at gas producer outlet. Type K thermocouple.
2	14	T2	Cool-clean gas temperature (^oC) at filter box outlet. Type K thermocouple.
3	15	T3	Ambient air and engine combustion air inlet temperature (^oC) to Meriam Laminar Flow Element. Type K thermocouple.
4	16	T4	Engine producer gas combustion air temperature (^oC) before Meriam Laminar Flow Element. Type K thermocouple.
5	17	T5	Engine exhaust temperature (^oC). Type K thermocouple.
6	18	RPM	Engine crankshaft speed (rev/min).
7	19	TQ	Engine crankshaft torque M-N (Meter-Newton). Lebow Rotary transformer torque sensor. Daytronic Power Amplifier and Active Filter Module.
8	00	PS	Pressure transducer power supply ON-OFF controller.
9	03	P1	Pressure drop across gas producer (cm H_2O).
10	04	P2	Pressure drop across scrubber (cm H_2O).
11	05	P3	Pilot tube velocity pressure, $V^2/2$ g (cm H_2O).
12	06	P4	Pressure drop across Meriam Laminar Flow Element measuring engine combustion air rate (Nm^3/hr).
13	07	P5	Pressure drop across Meriam Laminar Flow Element measuring producer gas combustion air mixture (Nm^3/hr).
14	08	P6	Absolute air pressure at inlet to Meriam Laminar Flow Element measuring engine combustion air (cm H_2O).

a Equipment/Instrumentation Number (See Figure 5-10)
b HP 3421A Terminal Block Number
c Datum Point Number

TABLE 5-6 (Continued)
DESCRIPTION OF DATA INSTRUMENTATION POINTS

a	b	c	
15	09	P7	Absolute gas pressure at inlet to Meriam Laminar Flow Element measuring engine fuel mixture (cm H_2O).
16	--	--	Container with disposable paper carburetor filter for engine combustion air.
17	--	--	Engine combustion air throttle.
18	--	--	Meriam Laminar Flow Meter with 20-inch smooth pipe entrance and exit sections.
19	--	--	Container with disposable paper carburetor filter for engine fuel mixture.
20	--	--	Sample port to collect cool-clean gas sample.
21	--	--	Meriam Laminar Flow Meter pressure line oscillation damper chambers. Four-inch PVC pipe, 4 feet long with 4-inch thick plugs of polyurethane foam at each end and at this mid-point.
22	--	--	All weather NEMA electrical box.
23	--	--	Microswitch (a Honeywell Division) pressure transducers. Differential pressure stock No. 162PCXXD/G (P1 and P2 parts). Absolute pressure stock no. 142 PCXXA (PA port only).
24	--	--	Regulated power supply for pressure transducers.
25	--	--	Shielded cables.
26	--	--	Pitot tube.
27	--	--	HP3421A Terminal Block.

a Equipment/Instrumentation Number (See Figure 5-10)
b HP 3421A Terminal Block Number
c Datum Point Number

TABLE 5-6 (Concluded)
DESCRIPTION OF DATA INSTRUMENTATION POINTS

a	b	c	
28	--	--	ON-OFF Controller.
29	--	--	12 volt dry cell or lead-acid battery.
30	--	--	NP3421A.
31	--	--	NP82161A Microcassette Magnetic Tap Recorded.
32	--	--	HP82162A Paper tape printer.
33	--	--	HP41CV Hand-held computer.
34	--	--	HP82002A Battery charger-AC Adapter 88 to 127 V; 172 to 254 volts; 48-66 Hertz; 5 watts.
35	--	--	Engine crankshaft torque transducer cable to power amplifier-active filter module.

a Equipment/Instrumentation Number (See Figure 5-10)
b HP 3421A Terminal Block Number
c Datum Point Number

laboratory procedures for biomass fuel analyses, producer gas composition analyses, engine power output analyses, etc. Special emphasis was placed on developing safety procedures, particularly for the field test units. Major safety issues included:

- Carbon monoxide poisoning
- Explosion hazards
- Tar handling

The operating, maintenance, and safety procedures are outlined in the manuals contained in Appendix B of this report.

A list of parameters to be monitored during both the laboratory and field test phases was prepared. Major suggested parameters to be monitored during the system operation were:

- Biomass fuel consumption
- Diesel fuel consumption
- Gas flow rate
- Water flow rate
- Gasifier grate temperature
- Gas outlet temperature

In addition, during laboratory operation, it was suggested that frequent gas samples be collected for composition analysis to indirectly determine the energy content or higher heating value of the producer gas.

The U.S. project team reviewed raw operating data collected during laboratory and field operations. Assistance was provided in evaluating the operating data to quantify the system performance. It was recommended that the extent of diesel fuel replacement and overall system thermal efficiency be used for determining the system performance. The extent of diesel replacement was estimated as percent reduction in diesel fuel consumption when compared with the diesel-only operation. The overall system thermal efficiency was estimated by dividing the net energy output in the pumped water with total energy content of the biomass and diesel fuel consumed. The results of system performance analyses for both laboratory and field operations are presented in Sections 3.0 and 4.0, respectively.

Finally, the U.S. project team assisted the Indian counterpart teams in documenting the results, particularly the laboratory and field operating experience and data, so that effective dissemination of test program results was achieved.

The U.S. project team developed a detailed outline of the final project report to illustrate the structure for presenting the overall project implementation efforts, including crucial operating data collected during the laboratory and field operations. The project report was designed to provide comprehensive design, operational, and management procedures for small biomass gasifier-engine projects.

Extensive technical editing and/or revisions of the final report were performed by the U.S. project team to enhance the utility of equipment design, testing, and field demonstration data generated during the course of this three-year collaborative program. Efforts were made to highlight factors that are important for the successful implementation and duplication of similar projects at other selected sites.

6.0 CONCLUSIONS AND RECOMMENDATIONS

The three biomass conversion projects under the U.S./India Cooperative Alternative Energy Program have successfully achieved their overall goals of developing and field testing small gasifier-engine systems in rural areas of India. The successful implementation of the biomass conversion program was largely achieved because of the very close working relationship maintained between the Indian and U.S. biomass experts through the entire length of this collaborative program. Specific conclusions regarding the accomplishments of each project team and general recommendations with respect to future courses of action for eventual commercialization of biomass gasification technology in India are given in the following subsections.

6.1 Conclusions

Under Project C, JSEI developed, constructed, and field tested a very well designed downdraft wood gas producer for running a dual-fuel diesel engine-water pumpset. The design was successfully field tested in advance of receipt of sophisticated instrumentation, which is strong evidence of the competence of the JSEI personnel assigned to the project. Proper selection of the field demonstration site and adequate training of the farmer by JSEI personnel were key factors in achieving more than 1000 hours of trouble-free field operation.

Project A of IIT, Delhi, developed a well functioning downdraft gas producer which has been successfully tested on charred corncobs, both in the laboratory and in the field. The gasifier was designed (see Appendix A) based on the technical data and operating experience contained in literature sources that were also used by Project C for their design. However, because the Project A system was designed for charred biomass fuel as opposed to raw biomass fuel used in Project C, a simpler gas cleanup unit was incorporated to cool and clean the producer gas (see Section 3.0).

Project B of IIT, Delhi, satisfactorily modified a single-cylinder, 5 hp diesel engine to operate as a dual-fuel engine on producer gas generated from charred biomass fuel (i.e., charcoal). This effort required full knowledge of diesel engine operation and carburetion of the producer gas which is a modest development for an engine to be operated at a constant speed for driving a centrifugal water pump. The Project B team extensively tested the modified diesel engine in the laboratory to generate valuable engine performance data on dual-fuel producer gas operation. These data are vital for optimizing the performance of existing diesel engines when they are switched to producer gas operation.

The gasifier and gas cleanup system, coupled with the engine modified under Project B, accumulated about 100 hours of field operation. It is anticipated that this integrated system can also achieve a long-term field performance similar to that achieved by the Project C system. The long-term field operation of the system, however, is contingent upon:

- Close cooperation between Projects A and B personnel
- Availability of charred biomass fuel
- Irrigation requirement at the field site

The resolution of some of these factors is presented in the recommendations Subsection 6 2.

In addition to the development and field testing of small gasifier-engine systems, the U.S./India Cooperative Energy Program has achieved an indispensable task of developing infrastructure/facilities in terms of space, equipment, and trained personnel. For example, during the course of this project, a world class biomass conversion laboratory was set up in the Department of Chemical Engineering, IIT, Delhi. This laboratory is equipped with a state-of-the-art microprocessor-based data acquisition and control system that could be used for monitoring the performance of biomass gasifier and combustion systems.

6.2 Recommendations

The two small gasifier-engine systems developed and tested under this project proved that technically sound, small-scale, simple gas producer engine systems can be developed. The long-term field tests under Project C also established that these systems can be independently operated by properly trained local farmers, and that the operation and maintenance of such systems do not require excessive time inputs from the farmer.

For the possible wide-scale implementation of this technology, it is recommended that extensive field testing of at least 25 units be carried out to:

- Optimize the design from the standpoint of net energy input and thermal efficiency; the design of hardware itself for an economical life, well accepted by the operator and manufacturer at the local and industrial level
- Determine the range of acceptable fuels and their availability
- Determine the socioeconomic and political impacts of wide scale adaptation of this technology at the farm level

The recommended additional work must be conducted as a team approach, integrating all the required expertise, to quantify the socioeconomic benefits and to develop a strategy for wide scale implementation of this technology in India. A dedicated project leader should be selected to lead the recommended cooperative effort. Such a cooperative effort, which requires individual and shared participation between several experts, should not be funded in an academic environment. However, the excellent laboratory and pilot facilities and trained personnel developed as a result of this U.S./India collaborative project, particularly the biomass conversion laboratories of Projects A and C, should be used to provide training to technicians and engineers from other organizations so that they may eventually carry out the field implementation work.

REFERENCES

1. First Workshop on Alternative Energy Resources and Developement (November 7-11, 1983), Coal Conversion Project Plans, Taj Place Hotel, New Delhi, India.

2. Grover, P.D. (1981), Energy from Agricultural and Forest Residues--Paru Fuel, Department of Chemical Engineering Technical Paper, New Delhi, India: Indian Institute of Technology.

3. Mathur, H.B. (February 4-6, 1985), "Development of Small Size Gasifier-CI Engine for Agricultural Needs," paper presented at the Second Workshop on Alternative Energy Resources and Development, Maurya Place Sheraton Hotel, New Delhi, India.

4. First Workshop on Alternative Energy Resources and Development (November 7-11, 1983), Biomass Conversion Project Plans, Taj Place Hotel, New Delhi, India.

5. National Academy of Sciences (1983), Producer Gas: Another Fuel for Motor Transport, National Academy Press: Washington, D.C.

6. Jyoti Solar Energy Institute final report for the Ford Foundation (1983), Development and Demonstration of Biomass Gasifiers and Dual Fuel Engines in Hilly Areas, New Delhi, India.

7. Pittsburgh Energy Technology Center (November 1983), "First Annual Workshop on U.S./India Cooperative Alternative Energy Program," report on trip to India, U.S. Department of Energy.

8. Proceedings of the First Annual Workshop on U.S./India Cooperative Alternative Energy Program (November 7-11, 1983), held at Taj Place Hotel, New Delhi, India.

9. Kaupp, A. and J.R. Goss (March 1981), State-of-the-Art for Small Scale Gas Producer-Engine Systems, Davis, California: The University of California, Department of Agricultural Engineering.

10. Swedish Gas Producer Report of January 1962, translated by the Department of Agricultural Engineering (1979), University of California, Davis, California.

11. Proceedings of the Second Annual Workshop on U.S./India Cooperative Alternative Energy Program (February 4-6, 1985), New Delhi, India.

12. Tiang Co, V.M. (1986), Design, Development and Performance of a Small-Scale Rice Hull Gasifier-Engine Sustem for Continuous Operation, M.S. thesis, Davis, California: University of California.

REFERENCES (Concluded)

13. Goss, J.R. (May 1985), "Producer Gas Technology Status Assessment," solar applications in remote locations, Proceedings of the Sixth Soleras Workshop, Las Cruces, New Mexico.

14. Hewlett Packard (May 1984), A Data Acquisition/Control Unit, Technical Brochure 3421.

15. Mason, M. (December 1984), "Applications and Operation of AVL Model 6602 IMEP Meter," internal report, Milwaukee, Wisconsin: Briggs and Stratton Co.

APPENDIX A

GASIFIER DESIGN CALCULATIONS

This Appendix presents a step-by-step design procedure used for developing the gasifier under Project A.

A.1 PRODUCER GAS REQUIREMENT

The composition of the producer gas varies with the type and quality of the fuel used. It generally lies in the following range (in volume percent).

CO range is 17%-25%; H_2 range is 6%-14%; CH_4 range is 0.0%-1%

CO_2 range is 3%-7%; O_2 range is 1%-4%; N_2 range is 55%-64%

The engine pump efficiency varies from 20% to 30%. In the present calculations, an average composition for the combustible gases in the producer gas is CO -- 23%, H_2 -- 10%, CH_4 -- 0.5% and an engine efficiency of 20% (on the minimum side) are assumed.

The energy equivalent of 1 Nm^3 of the above quality producer gas is equal to 1.9 hp/hr.

The amount of producer gas required to run a 5 hp/hr engine with 20% efficiency =

$$\frac{5}{0.2 \times 1.9} = 13.2 \ Nm^3/hr$$

Assuming 10% excess production (accounting for composition changes) = 14.52 Nm^3/hr

A.2 FUEL REQUIREMENT

An approximate gas yield[1]* from biomass fuels, both charred (80% carbon content) and certain raw fuels, is 5 Nm^3/kg of dry fuel. Assuming an average of 10% moisture in the fuel, the gas yield becomes 4.5 Nm^3/kg of wet fuel.

Fuel required to produce 14.52 Nm^3/hr = 3.22 kg/hr. For 8 hours continuous operation of the gasifier, the fuel required equals 26 kgs.

---

*The number in the brackets refers to reference list at the end of this Appendix.

A.3 THROAT DIAMETER

The "hearth load" of a gasifier is expressed in terms of "specific gasification rate," i.e., the amount of dry fuel in kilograms that can be gasified per square meter of the throat area per hour. In downdraft gasifiers, the maximum permissible gasification rate[1] in terms of producer gas output is $1.Nm^3/cm^2$ -- hour. However, the optimum value for efficient operation of the gasifier lies in the range of 0.8 to $0.95\ Nm^3/cm^2$ -- hour. For a requirement of $14.52\ Nm^3/hr$ producer gas, the throat diameter ranges between 40mm to 50mm. Specific gasification rate = gas flow rate in Nm^3/throat area in $cm^2 = 14.52/((4.5)^2 \times /4) = 0.9\ Nm^3/cm^2$ -- hour.

A.4 AIR REQUIREMENT FOR GASIFICATION

The air requirement for gasification is calculated based on "Equivalence Ratio" (ER) defined as.[1].

$$ER = \frac{\text{(Weight of oxidant/weight of dry fuel)}}{\text{(Oxidant/fuel) at stoichiometric air ratio}}$$

The optimum ER value is considered where the highest amount of chemical energy is available.

The ER value normally lies between 0.2 to 0.4[1]depending upon O_2 content. In the present case with biomass, charred ER equals 0.275.

The stoichiometric oxygen requirement for one kg mole of carbon is 22.4 m^3 at standard conditions (STP)

Oxygen needed at ER of 0.275 = 22.4 x 0.275
= 6.16 standard cubic meter (SCM)/hr

Air requirement = 29.33 SCM/hr

Air required to gasify 3.22 kg/hr of fuel (assuming 100 % carbon)

$$\frac{29.33}{12} \times 3.22 = 6.689 \text{ SCM/hr}$$

A.5 TUYERE DIAMETER AND NUMBER OF TUYERES

In determining the above, the following specifications have been taken into consideration:

(a) Air flow rate vs. tuyere diameter data:[1]

Useful air flow rate range (Nm^3/hr)	Tuyere diameter (mm)
6.3 - 11.9	7.9
7.6 - 27.2	12.7
12.4 - 47.6	19.0

Recommended air tuyere diameter = 8mm.

(b) Air velocity in the tuyere:[1]

The optimum air velocity in the tuyeres should lie in the range of 19-22 m/sec at STP. Higher velocities lead to slagging of ash and lower velocities lead to improper oxidation conditions.

From the above considerations, for an air flow rate of 6.689 SCM, 3 tuyeres of 8mm diameter are fixed. This gives the required air velocity in the tuyeres.

A.6 CONVERSION RATIO

Conversion ratio = $CO/(CO + CO_2)$.

Recommended value is 0.95 and above.

A.7 OTHER HEARTH DIMENSIONS

These are calculated based on the data, graphs, and recommendations given in the literature.[1,2]

- Vertical distance of air tuyeres from the throat is equal to 1.6 times throat diameter = 1.6 x 45 = 72mm.
- Distance between the tip of the tuyere and center of the throat is equal to 2.75 times throat radius = 62mm.
- Fire length: This is the vertical distance between air tuyeres and the bottom of the reduction zone.
- Fire length corresponding to a gas flow rate of 6.689 SCM and 72°C is 1.62mm (Figure 63 of Reference 1 of this Appendix).
- Length of the reduction cone is equal to 90mm. Length of the oxidation zone (distance between air tuyeres and throat) is 72mm.

A.8 DIAMETER AND LENGTH OF THE GASIFIER

The diameter of the gasifier is fixed at 400mm, taking into account the tuyere ring span and some thickness of the fuel bed serving as insulation. The length of the gasifier is fixed at 1 meter, taking into account the volume of the fuel required for 8 hours of continuous operation.

A.9 TRANSIT TIME

The heating value of the gases depends upon the transit time which is defined by fire length divided by air velocity in the tuyeres.

$$\text{Transit time} = \frac{162}{21 \times 1000} = 7.7 \times 10^{-3} \text{ sec}$$

The heating value corresponding to the above value of the transit time is 5.5 MJ/Nm^3 which is quite satisfactory for efficient operation of the gasifier.

A.10 REFERENCES

1. Kaupp, A. and J.R. Goss (March 1981), "State-of-the Art for Small Scale Gas Producer-Engine Systems," Department of Agricultural Engineering, University of California, Davis, CA.

2. Swedish Gas Producer Report of January 1962, translated by the Department of Agricultural Engineering (1979), University of California, Davis, CA.

APPENDIX B

GASIFIER-ENGINE SYSTEM OPERATION MANUALS

This Appendix presents gasifier-engine system operation manuals for the three systems developed and/or tested under the U.S./India Cooperative Alternative Energy Program. The manual for the system developed under Project C is presented first, followed by similar manuals for the system developed under Projects A and B and the U.S. test gasifier-engine system. The operation manual(s), in general, do the following:

- Identify system components
- Presents normal operating and maintenance procedures
- Provide trouble-shooting guidelines
- Describe safety precautions

MANUAL FOR GASIFIER ENGINE SYSTEM DEVELOPED UNDER PROJECT C

Section 1 -- General Information

Introduction

Congratulations on accepting our gasifier system. The gasifier system you now have is the GM-55 model developed after considerable research. This manual includes installation, operation, theory of operation and maintenance information of the system. Sections 2 and 3 describe how to install and operate the gasifier system. Section 4 describes the theory of operation. Section 5 contains maintenance and troubleshooting guidelines for the system. Section 6 describes safety precautions.

1.1 System Configuration

The gasifier system consists of a downdraft wood gasifier, a gas cleanup unit and engine pumpset. The engine used is a single cylinder, water cooled diesel engine and the pump is of centrifugal type.

1.2 System Specifications

The system specifications of the GM-55 model are given in Table B-1.

TABLE B-1
TECHNICAL SPECIFICATIONS OF THE GASIFIER SYSTEM

A. Gasifier	
1. Model:	GM-55
2. Material of construction:	Generally M.S. except for hearth and air nozzles where SS is used
3. Rated capacity, m^3/h:	12
4. Air nozzles numbers:	4
5. Hopper capacity, kg:	30
6. Fuel used:	Waste wood blocks (50mm x 40mm x 15mm)
B. Gas cleanup unit	
1. Venturi scrubber:	Direct contact co-current water jet
2. Filter media:	Pebbles, cotton waste, etc.
3. Scrubber water flow rate, l/h:	600
4. Pressure drop, mm of water:	45
5. Gas temperature after cooling:	Ambient
6. Tar and soot in gas:	Negligible

Section 2 -- Installation

2.1 Inspection

The gasifier system sent to you contains the following items:

1. Gasifier (Figure B-1)

2. Gas cleanup unit

3. a) Venturi Scrubber (Figure B-2)
   b) Wet and dry filter (Figure B-3)
   c) Security filter (Figure B-4)

4. Engine pumpset

5. Accessories (pipe and pipe fittings, etc.)

(Any item marked by asterisk '*' is not sent to you.)

Please ensure that all the above mentioned items are included in the shipment. If any item is missing, please contact us.

2.2 Installation

The gasifier system has to be mounted on a proper foundation. The foundation drawing is shown in Figure B-5. Since all the items of the system are sent to you in assembled condition, you have to simply mount them at appropriate positions and connect them as shown in Figure B-6.

To minimize the vibrations, mount the engine using rubber packing and spring washers.

The gasifier has two gas outlets. Connect one outlet to the Venturi scrubber and plug the other outlet. Connect the outlet from the Venturi scrubber to the wet and dry filter using the short 50mm flexible pipe. Then connect the outlet of the wet and dry filter to the security filter. Fit the 50mm T connection to the outlet of the security filter and make the connections to the air filter and the engine as shown in Figure B-6. Mount the hand blower on the gasifier as shown in Figure B-1 and connect the inlet of the blower to the gasifier via 50mm gate valve. The outlet to the blower should lead outside for safe dispersion of the gas.

Use 75mm PVC pipes and pipe fittings for the pump suction and discharge lines. Venturi scrubber and wet section of the wet and dry filter requires water for scrubbing. For this purpose, bleed off water from the discharge line and make the connections to the Venturi scrubber and the wet and dry filter as indicated in diagram (Figure B-7).

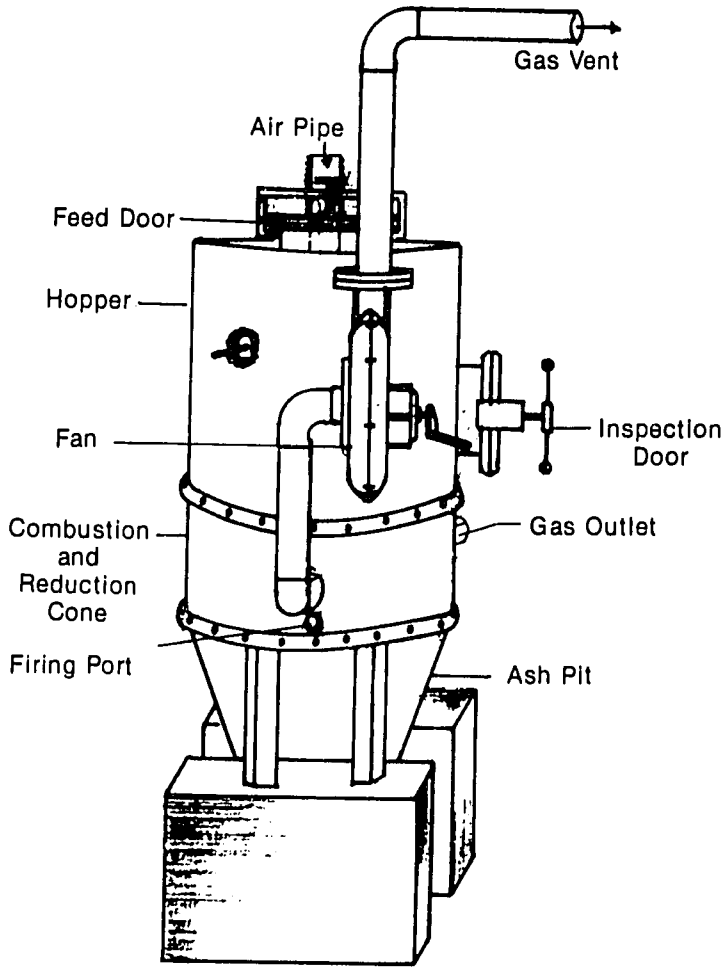

Figure B-1
JSEI G-55 Model Gasifier

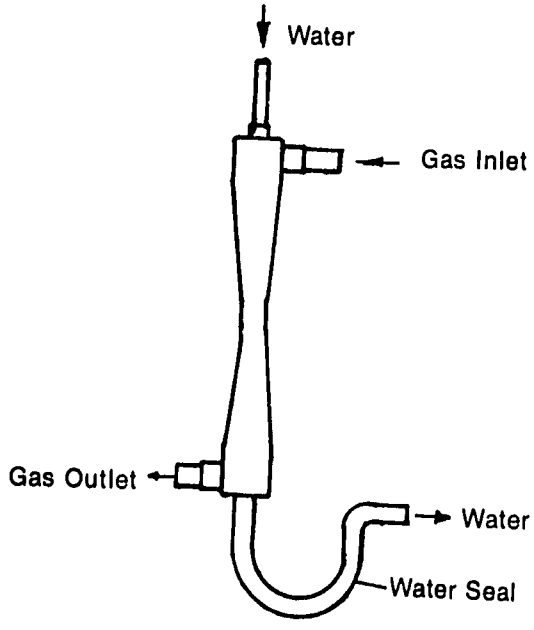

Figure B-2
Venturi Scrubber

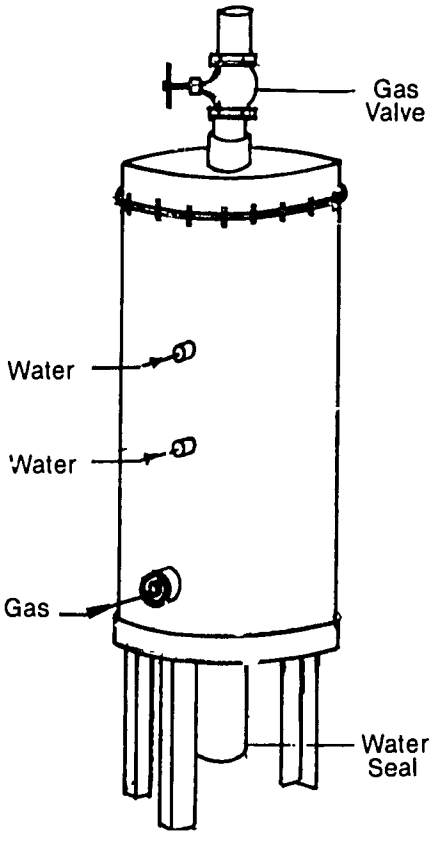

Figure B-3
Wet and Dry Filter

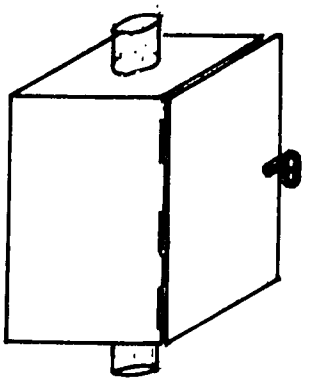

Figure B-4
Security Filter

145

Figure B-5
Gasifier-Engine Pumpset Foundation

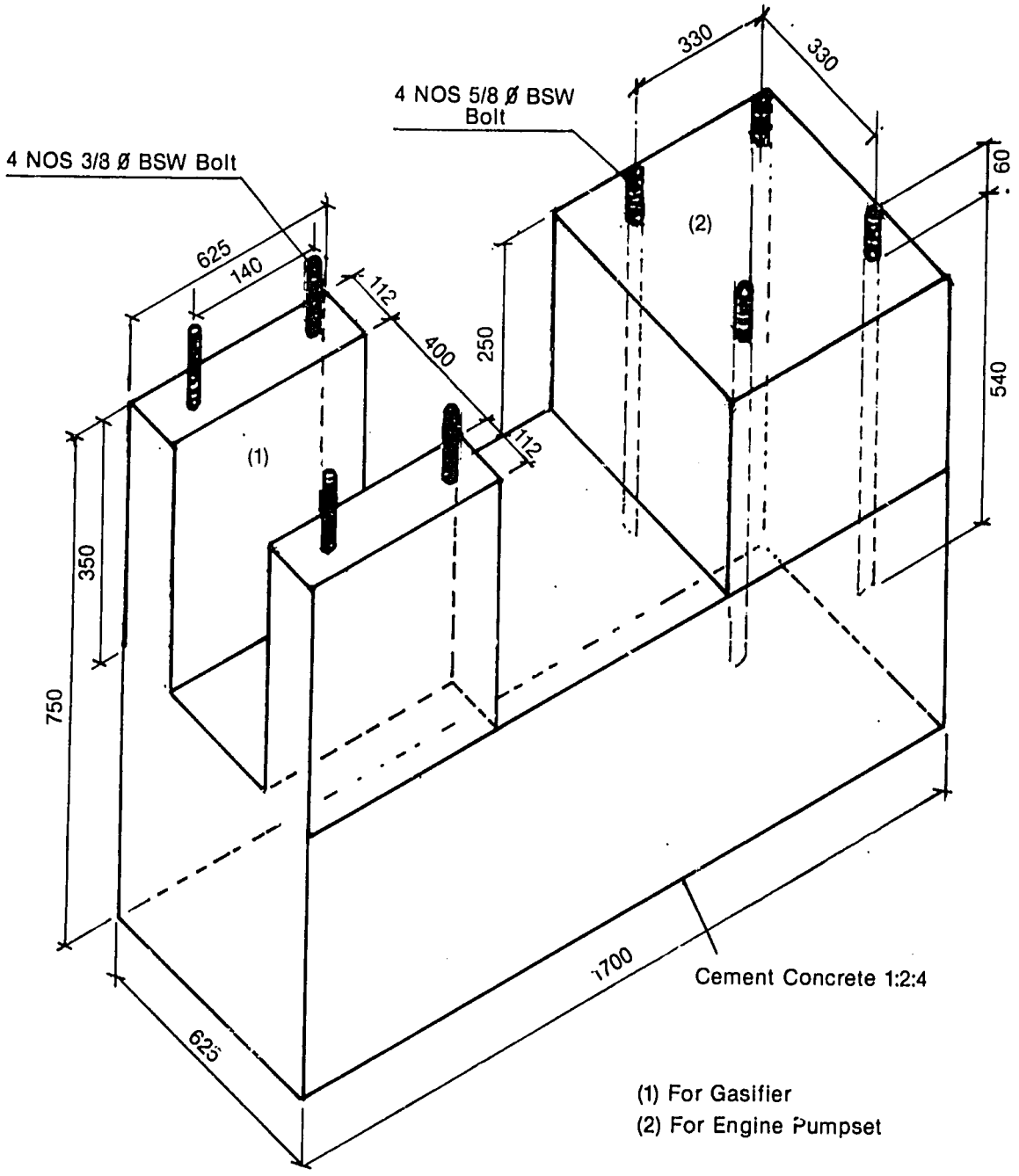

(Dimensions in mm)

Figure B-6
Gasifier-Engine Pumpset

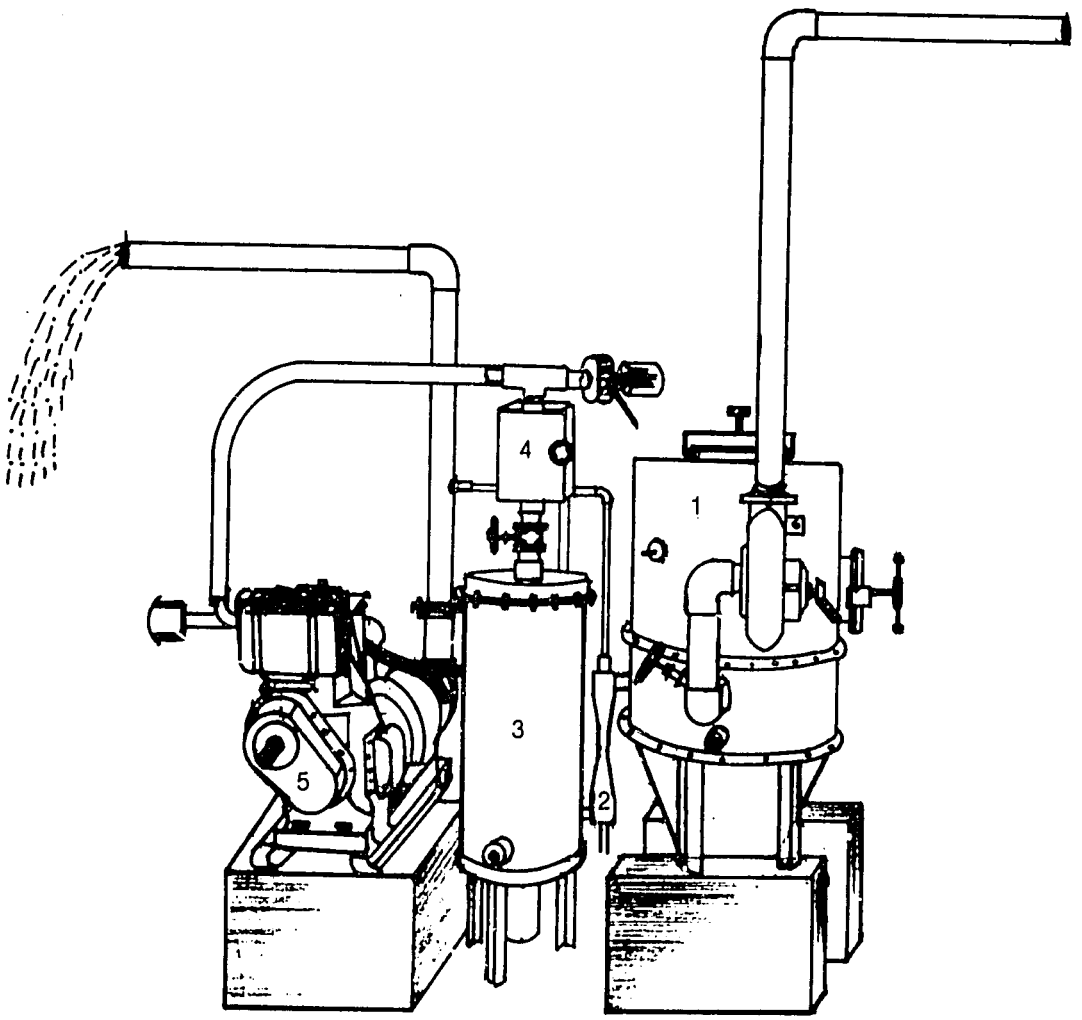

1 Gasifier
2 Venturi Scrubber
3 Wet and Dry Filter
4 Security Filter
5 Engine Pumpset

147

Figure B-7
Water Connections to Venturi Scrubber and Wet Filter

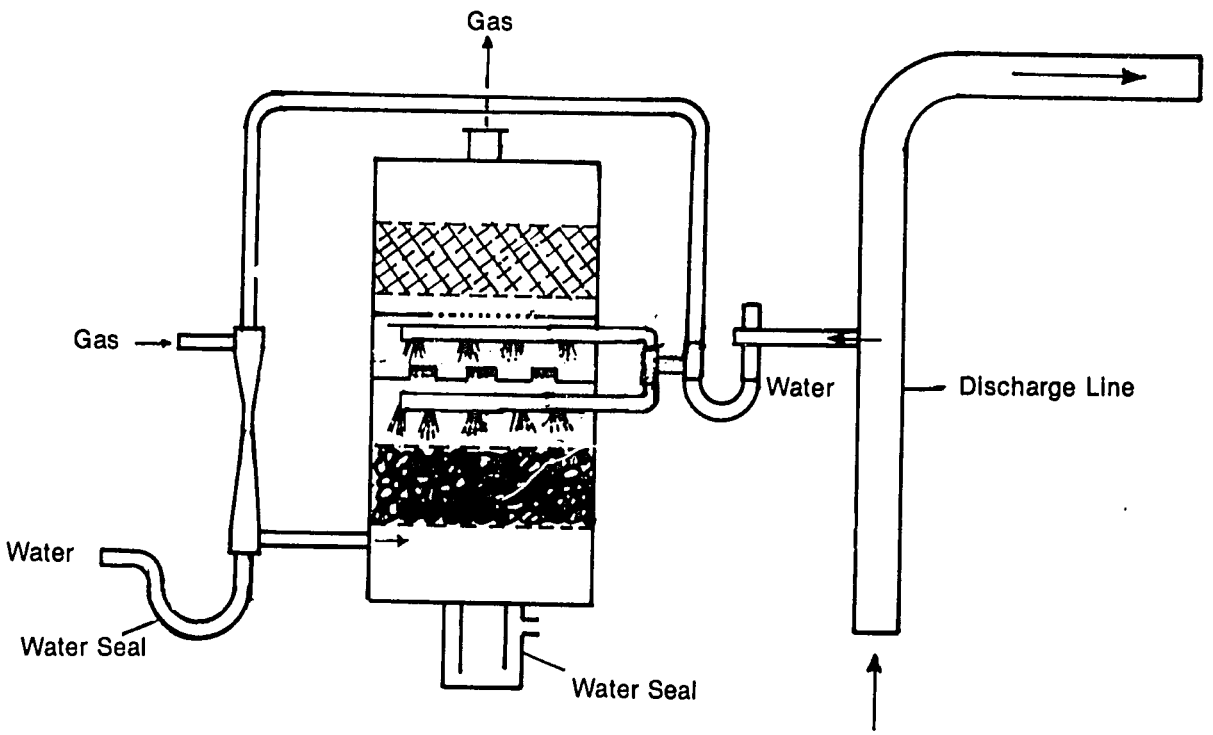

148

Section 3 -- Operation

Introduction

This section describes fuel preparation, the startup and operation of the gasifier. It is easy to operate for a person who has some operating experience with a diesel engine.

3.1 Fuel Preparation

The fuel to be used in the gasifier is wood and it has to be of proper size. It can be of any species, but should be cut into small pieces of average size 50mm x 40mm x 15mm. Alternatively, wood blocks of the above-mentioned size from furniture shops can also be used.

3.2 Startup Procedure

The following procedure should be followed for starting up the gasifier system:

a) Fill the gasifier up to 50mm above the air nozzles with charcoal (charcoal helps easy lighting) via the feed door.

b) Then load the gasifier with wood pieces.

c) Secure the entire system airtight.

d) Isolate the engine pumpset by shutting off the valve below the security filter.

e) Light the gasifier with a lighted wick via the firing port using the hand fan for air circulation.

f) Meanwhile start the engine-pumpset on only diesel fuel.

g) Continue running the hand blower for about 15 minutes.

h) Bleed off water from the discharge line to the Venturi scrubber and wet and dry filter.

i) Isolate the fan by shutting off the valve below it.

j) Open the valve below the security filter, so that the entire system is put on engine suction.

k) Simultaneously adjust the air supply using the butterfly valve, so that the engine runs smoothly without knocking.

l) Adjust the governer, so that the engine runs at the rated rpm (1500), if required.

3.3 Shut-off Procedure

a) Plug the air pipe of the gasifier.

b) Stop the engine. For stopping the engine, press the Pump Rack Operating Lever towards the Fuel Pump and hold in that position until the engine stops.

c) Close the gas valve located below the security filter.

Section 4 -- Theory of Operation

Introduction

This section describes the principles involved in gasification and the actual working of the gasifier system.

4.1 Gasifier

It is a downdraft gasifier in which the wood is partially combusted (i.e., allowed to burn in limited amount of air). The gases that are produced are mostly carbon monoxide and hydrogen. Of course nitrogen is also present in the gas and this comes from air which is used for gasification. The gasification temperature is about 1000-1100°C. The average composition of the gas produced is given below:

Gas	% by Volume
Carbon monoxide (CO)	18-25
Hydrogen (H_2)	13-15
Methane (CH_4)	3-5
Heavy hydrocarbons	0.2-0.4
Carbon dioxide (CO_2)	5-10
Nitrogen (N_2)	45-54
Water vapor (H_2O)	10-15

The mixture of gases produced from the gasifier is termed as "producer gas" or "wood gas."

4.2 Gas Cleanup Unit

The gas produced from the gasifier contains particulate matter and some condensate vapors. The particulate matter is comprised mostly of soot and ash. Gas cleanup removes the particulate matter and the condensable vapors. The hot gas is cooled by wet scrubbing which prevents derating of the engine.

4.3 Engine Pumpset

No modification has been done on the engine and you should be able to run the engine pumpset on only diesel fuel if something goes wrong with the gasifier. Only a simple T-connection is used for mixing the air and gas and introduced at the air intake part of the engine.

Table B-2 gives the performance data of GM-55 model gasifier system.

TABLE B-2
PERFORMANCE DATA

a)	Hourly wood requirement, kg	3.5
b)	Temperature in the oxidation zone, ^{o}C	1000-1100
c)	Gas outlet temperature, ^{o}C	200
d)	Average diesel replacement, %	70

Section 5 -- Maintenance

Introduction

This section describes maintenance procedure for the gasifier, gas cleanup unit and engine-pumpset and also troubleshooting guidelines.

5.1 Maintenance

5.1.1 Gasifier

Your gasifier needs very little maintenance. After nearly 1000 hours of operation, check the air pipe for any corrosion. If it is corroded, replace it. Spares can be obtained from us. If you find any gas leakage through any of the doors or flanges, replace the gasket.

5.1.2 Gas Cleanup Unit

a) Venturi scrubber: After 250 hours, clean the inside of the Venturi scrubber using a long narrow wire brush. Also clean the water sprayer.

b) Wet and dry filter: After 50 hours of operation, remove the lid of the wet filter and replace the cotton waste. Use not less than 500 grams of cotton waste. After 250 hours of operation, the water sprayer and perforated cap plate should be cleaned, and these components can be accessed by removing the lid of the filter and supporting plate below the cotton waste.

c) Security filter: After 24 hours of operation, change the cotton waste. The weight of the cotton waste should not be less than 50 grams.

5.1.3 Engine

a) Daily maintenance:
   -- Check the lubricating oil level in the sump and fill it up to the required level.
   -- Check for any leakage of oil, water or fuel.

b) Every 100 hours of operation:
   -- Clean the air filter.
   -- Tighten all bolts, nuts and key.

c) Every 250 hours of operation:
   -- Change the lubricating oil.
   -- Clean the fuel tank.
   -- Clean the exhaust silencer of soot.
   -- Check the valves and valve seats for carbon deposits or any sticky material.

d) Every 500 hours of operation:
   -- Empty the oil sump, flush it with flushing oil and fill it up with new lubricating oil.
   -- Change the lubricating oil filter.
   -- Change the paper element of the fuel filter.

e) Every 800 hours of operation:
   -- Change the paper element of the air cleaner.

f) Every 1000 hours of operation:
   -- Do the complete overhaul of the engine.

5.2 Troubleshooting Guidelines

No.	Symptom	Probable Cause	Corrective Action
1.	Difficult to light the gasifier	a) Charcoal is not present in the gasifier at the lighting zone	a) Unload the gasifier and fill it with charcoal as mentioned in Section 3.2
		b) Wood is wet	b) Remove the wet wood and use dry wood
		c) Fan is faulty	c) Rectify the fault
		d) Plug at the top of the air inlet pipe is not removed	d) Remove the plug from the air inlet pipe
		e) Choking of the firing port	e) Poke the firing port with a rod
2.	Excessive wood consumption	a) Wood is wet	a) Use dry wood
		b) Leakage through gasifier doors and joints	b) Tighten the doors and joints
3.	When the gas leaks through the air pipe	Choking at the throat of the gasifier	Use the pedal operated shaking system to remove choking at the throat. If not possible, open the feed door and poke the gasifier
4.	Engine speed reduces	a) Choking at the throat	a) Adopt corrective action mentioned for sympton 1.e
		b) Air intake is low	b) Increase the air intake using the air valve
5.	Engine stops during operation	a) No fuel in the tank	a) Fill the tank with fuel
		b) No wood in gasifier	b) Load the gasifier with wood
		c) Choking at the throat	c) Adopt corrective action mentioned in symptom 3
6.	Replacement of diesel is very poor/no replacement	No combustible gas is produced as a result of leakage of air into the gasifier	Close the gas valve and check for gas leakage at different joint/doors of the gasifier and tighten them accordingly

Section 6 -- Safety Precautions

Introduction

This section describes the hazards involved in the operation of the gasifier system and the safety precautions to be observed.

The main constituent of producer gas is carbon monoxide and this is a highly toxic gas. It is an odorless and colorless gas. It has 250 times greater tendency to combine with haemoglobin of the blood than does oxygen resulting in the formation of soluble compound, namely, carboxy haemoglobin (HbCO). Thus, the amount of uncombined haemoglobin available for oxygen transport will become less and in extreme cases cause death. Table B-3 gives the symptoms of carbon monoxide with respect to percentage saturation of the blood with carbon monoxide.

Therefore, it is essential to observe certain safety precautions while operating the gasifier system to avoid any carbon monoxide poisoning or fire hazard.

-- Always install the gasifier system in a well ventilated building.

-- Never breath over the gasifier while poking it.

-- While using the hand fan, make sure the gas is dispersed at a higher level into the atmosphere.

-- Don't keep the feed door open too long a time while in operation, either for poking or loading the gasifier in which case there is a possibility of enough air getting into the gasifier resulting in explosion.

-- Always wear safety goggles while looking through the firing port.

-- Always wear gloves during maintenance. Avoid direct contact with any substance (organic) deposited in the system.

Just in Case

In the event of carbon monoxide poisoning, observe the following first aid procedure and consult a physician.

-- Move the poisoned person quickly out into the open air or to a room with fresh air and good ventilation.

-- If the poisoned person is unconscious, loosen tight clothes around the neck, remove foreign objects (false teeth, etc.) from the mouth and give him artificial respiration.

TABLE B-3
SYMPTOMS OF CARBON MONOXIDE POISONING*

% Saturation of the Blood With Carbon Monoxide	Symptoms	
	At Rest	During Physical Exertion
0-10	None	None
10-20	None	During exertion, dizziness, heart pounding, and difficulty in breathing may occur.
20-30	Headache may occur.	In case of exertion, pressure at the forehead. Mild headache.
30-40	Headache in the forehead or back of the head, pulse increase, heartbeat, nausea.	In case of exertion, dizziness, fainting, possibly unconsciousness are added.
40-50	All symptoms are more pronounced, nausea, vomiting, dizziness, increased tendency for unconsciousness.	
50-60	Deep unconsciousness with increased breathing and pulse rate.	
60-70	Deep unconsciousness with slow pulse and low breathing rate, possibly death.	
70-80	Respiratory failure and death.	

*Source: Generator Gas, The Swedish Experience from 1939-1945, Solar Energy Research Institute, Colorado.

MANUAL FOR THE SYSTEM DEVELOPED UNDER PROJECT A

GASIFIER UNIT
Description, Operation, Maintenance

		Page No.
I.	Description of the Gasifier Unit:	B-22
	• Different parts of the gasifier	
	• Description of each part of the gasifier	
	• Different parts of the Thermoseparator	
	• Description of each part of the fitter drum	
	• Different parts of the fitter drum	
	• Description of the each part of the fitter drum	
II.	Operation of the Gasifier Unit:	B-31
	• Preparation for starting of the gasifier unit	
	- Gasifier	
	- Thermoseparator	
	- Fitter drum	
	• Ignition and start up of the gasifier unit	
	• Shut down of the gasifier unit	
	• Operational problems and remedies	
	- Apparent malfunctioning of the system	
	- Indications for malfunctioning of the system	
	- Causes for malfunction	
	- Remedies for malfunction	
	- Problem with thermoseparator and fitter drum and their remedies	
III.	Maintenance:	B-36
	• Maintenance during operation	
	• Long term maintenance	

I. DESCRIPTION OF THE GASIFIER UNIT

Gasifier Parts List (Figure B-8)

Parts List:

1. Top shell
2. Bottom shell
3. Throat support plate
4. Throat and cone plate
5. Vertical grate
6. Horizontal grate
7. Brick lining
8. Blower inlet
9. Shaker rod
10. Cone for ash removal
11. Stand
12. Gas outlet pipe
13. Air tuyere
14. Ignition port
15. Flange
16. Fuel feeder
17. Thermocouple port

Figure B-3
Cross-Sectional View of G-45 Gasifier

Index
1. Top Shell
2. Bottom Shell
3. Throat Support Plate
4. Throat and Cone Plate
5. Vertical Grate
6. Horizontal Grate
7. Brick Lining
8. Blower Inlet
9. Shaker Rod
10. Cone for Ash Removal
11. Stand
12. Gas Outlet Pipe
13. Air Tuyere
14. Ignition Port
15. Flange
16. Fuel Feeder
17. Thermocouple Port

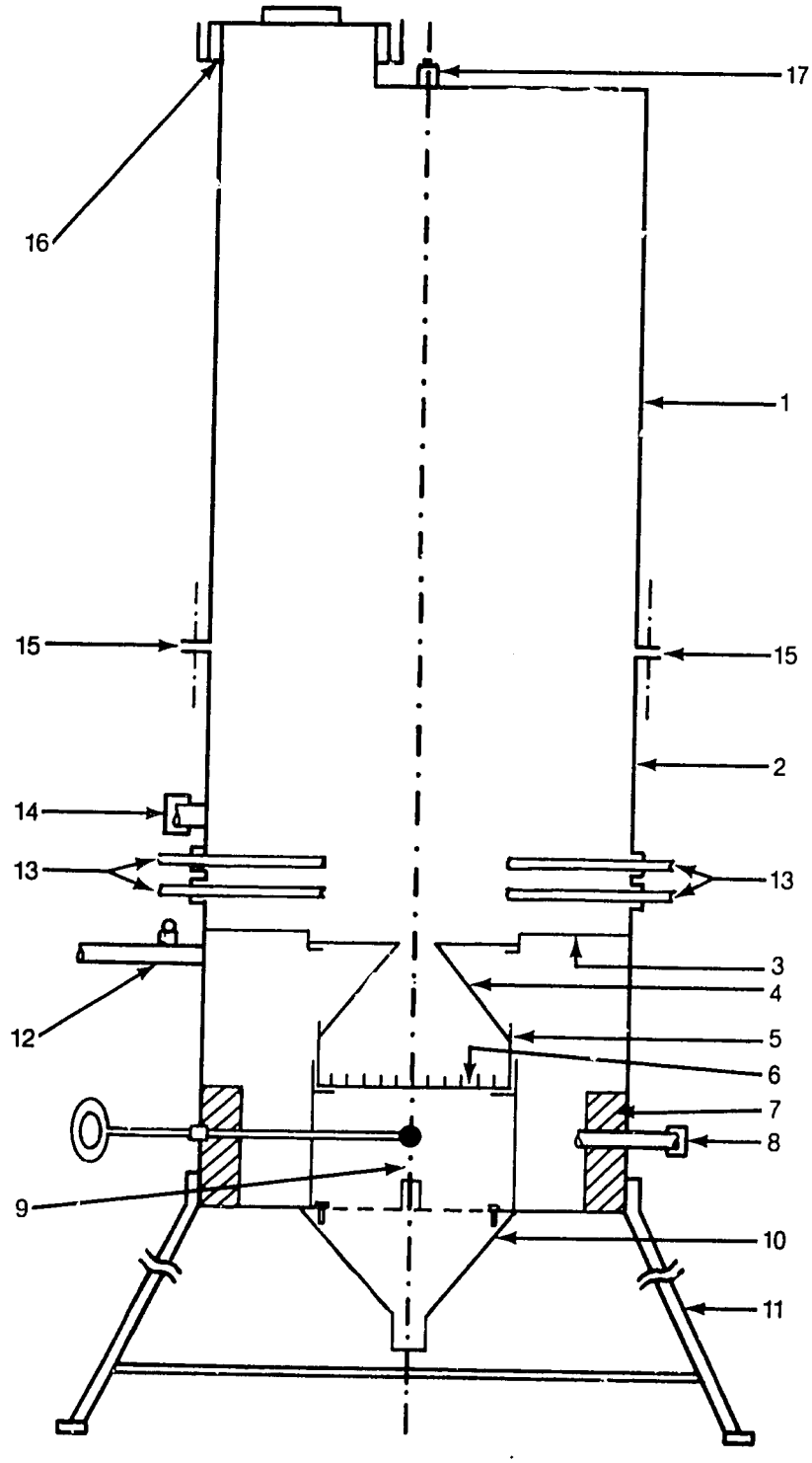

160

Description and Function of Each Part:

1. Top shell: This is mainly the solid fuel storage chamber. Drying and some pyrolysis of the solid fuel takes place in this part.

2. Bottom shell: This is the main gasifier section. The oxidation, reduction reactions occur in this part resulting in the production of producer gas.

3. Circular plate support: The solid fuel, as well as the throat plate cum reduction cone, are supported by this plate.

4. Throat plate cum reduction cone: This combined part has two functions. The throat opening controls the specific gasification rate and the reduction cone controls the reactions leading to specified quality of the outlet gases. This part is made in different dimensions, i.e., throat opening and height of the cone for specific conditions.

5. Vertical grate: This also supports the fuel bed in the reduction zone and allows free flow of gases.

6. Horizontal grate: This supports the fuel bed in the reduction zone and also removes ash and allows free flow of gases.

7. Brick lining: Supports shaker rod and blower inlet pipe.

8. Blower connection pipe: The hand blower is connected through a valve to this pipe. For igniting the fuel and bringing the fuel to gasification temperature, air is drawn with the blower through this opening.

9. Shaking rod: This helps in effectively removing the ash from the grate and also disturbs the fuel bed above the grate to avoid choking problems and facilitate free flow of gases.

10. Ash pit: This collects the ash produced during gasification. The ash is removed periodically from the bottom opening.

11. Stand: This supports the whole gasifier unit.

12. Gas outlet pipe: Gases generated are drawn out through this pipe.

13. Air tuyeres: Air is drawn through the tuyeres for gasification of the solid fuel.

Description and Function of Each Part (concl'd):

14. Fuel ignition port: For starting the gasifier, the fuel is ignited in the gasifier by drawing in torch burning flame through this opening.

15. Flange: Connects the top cover and the bottom shell with an asbestos gasket material for preventing air leakage into the gasifier.

16. Fuel feeder: Solid fuel is fed to the gasifier through this lid and keeps the opening airtight.

17. Thermocouple fixing pipes: Thermocouples are fixed through these pipes for measuring the solid fuel bed temperature and temperature of the exit gases.

Thermoseparator

Different Parts of the Separator: (Figure B-9)

1. Main jacket
2. Gas inlet pipe
3. Gas outlet pipe
4. Water inlet pipe
5. Water overflow pipe
6. Water outlet pipe
7. Water head supporting plate
8. Gasket with peripheral openings
9. Thermocouple port (optional)
10. Gas sampling port (optional)
11. Water seal tank
12. Overflow pipe from water seal tank

Description & function of each part:

1. Main jacket: This is the main thermoseparator body. The top section is cylindrical and bottom section is conical.

2. Gas inlet pipe: Hot gases from the gasifier enter the cyclone through this pipe.

3. Gas outlet pipe: The gas, after being cooled and eliminated from the particulate impurities, goes out through this pipe.

4. Water inlet pipe: Water is supplied through this pipe to the cyclone for cooling and cleaning of the gases.

5. Water overflow pipe: The excess water from the weir flows out through this pipe.

6. Water outlet pipe: The water from the cyclone along with the solid impurities flows out through this pipe.

Figure B-9
Schematic Diagram of Wetted Wall Cyclone Separator

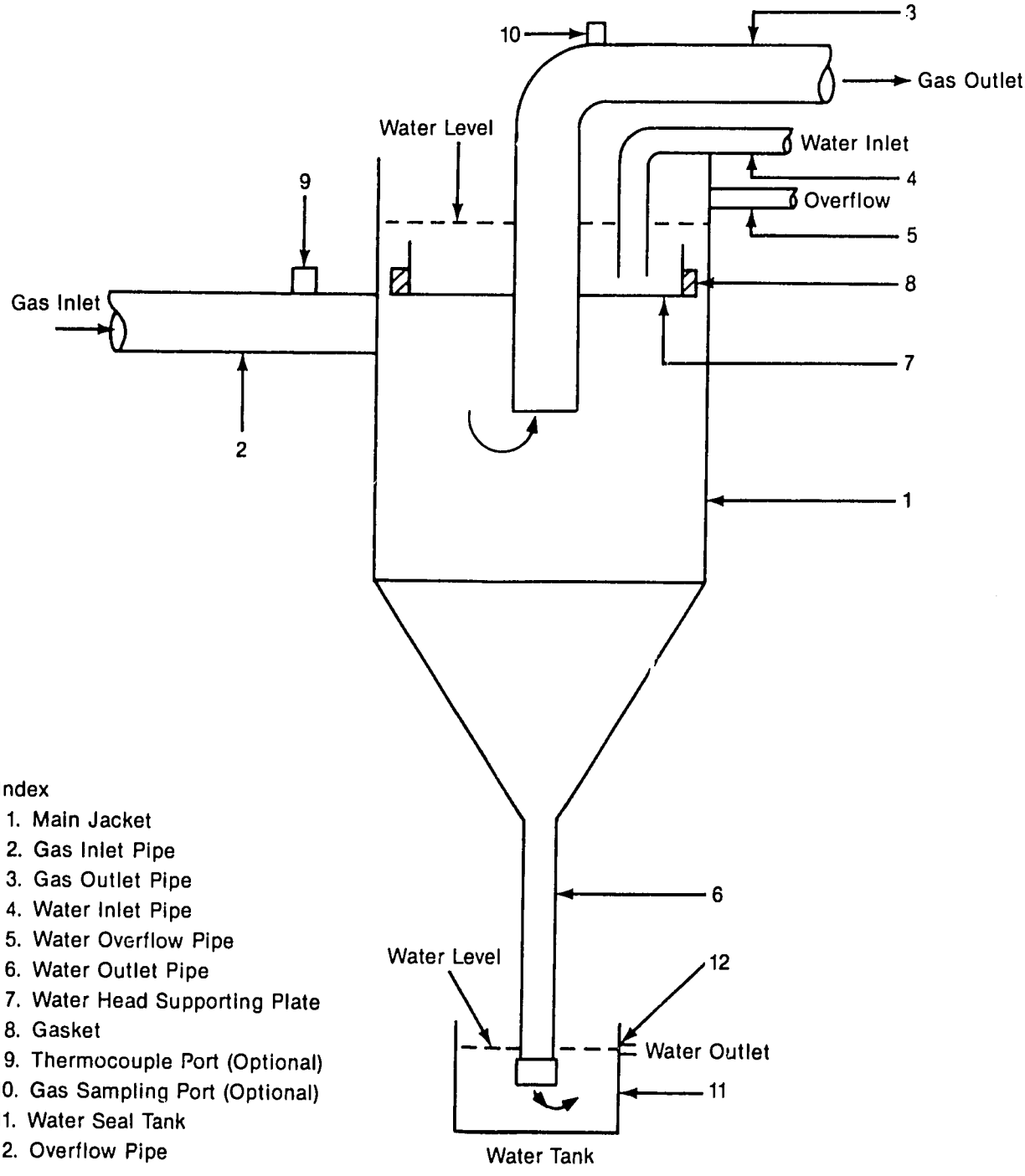

Index
1. Main Jacket
2. Gas Inlet Pipe
3. Gas Outlet Pipe
4. Water Inlet Pipe
5. Water Overflow Pipe
6. Water Outlet Pipe
7. Water Head Supporting Plate
8. Gasket
9. Thermocouple Port (Optional)
10. Gas Sampling Port (Optional)
11. Water Seal Tank
12. Overflow Pipe

Description & function of each part (concl'd):

7. Water head supporting plate: This plate is fixed just above the gas inlet pipe position to maintain constant head of water for the hydro separator operation.

8. Gasket with peripheral openings: This gasket is fitted between the separator wall and the water head wier. Water enters the cyclone body through the small openings provided in the gasket at different radial positions.

9. Thermocouple port: A thermocouple is fixed through this for measuring the inlet gas temperatures.

10. Gas sampling port: Gas samples are collected through this pipe for obtaining gas composition.

11. Water seal tank: This is a small vessel which acts as a water seal and also collects the particulate solids and tar.

12. Overflow pipe from the water seal tank: The water flows through this outlet and mixes with pumped water for irrigation.

Filter-cum-Surge-Tank

Different parts of the filter tank: (Figure B-10)

1. Main body
2. Top lid
3. Water Seal
4. Gas inlet pipe
5. Gas outlet pipe
6. Drain pipe
7. Filter bed supporting plate
8. Stand

Description and function of each part:

1. Main body: This is a 200-litre capacity oil barrel.
2. Top lid: This lid is a cover to the drum and rests on the water seal ring.
3. Water Seal: This is a cylindrical jacket provided at the top of the drum. The jacket is filled with either water or mud slurry. This prevents air leakage into the tank.
4. Gas inlet pipe: Gases from the thermoseparator enter the drum through this pipe.
5. Gas outlet pipe: Gases, after being cleaned from the particulate matter and moisture, leave through this pipe.
6. Drain pipe: Accumulated moisture and other impurities are drained through this pipe.
7. Filter bed supporting plate: This is a circular plate with perforations fitted around 6"-8" from the bottom The filter bed (rice husk or any other material) is supported on this plate.
8. Stand: The drum is supported on this stand.

Figure B-10
Filter/Surge Tank

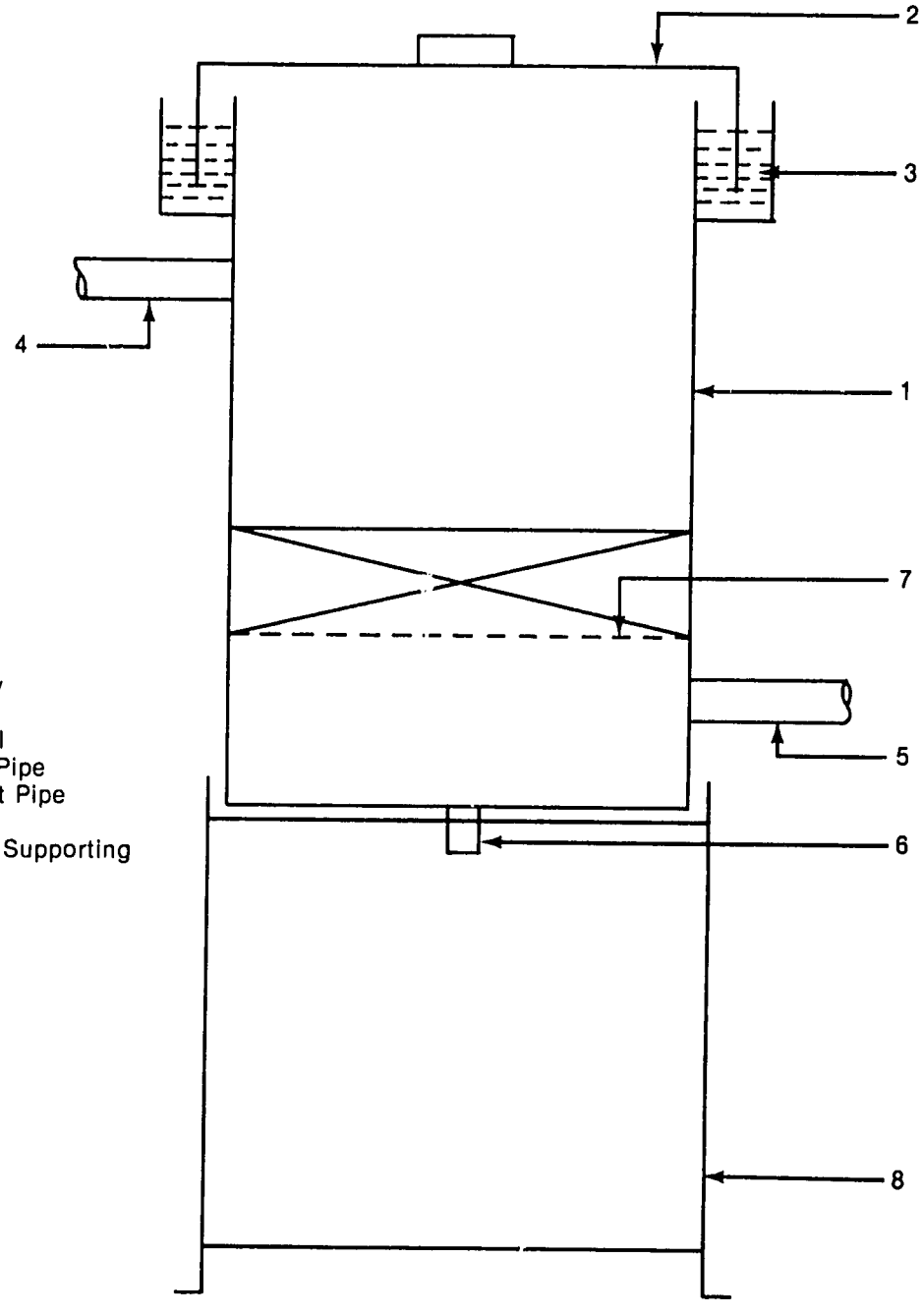

Index:
1. Main Body
2. Top Lid
3. Water Seal
4. Gas Inlet Pipe
5. Gas Outlet Pipe
6. Drain Pipe
7. Filter Bed Supporting Plate
8. Stand

167

II. OPERATION OF THE GASIFIER UNIT

Preparation for Starting of the Gasifier Unit

Gasifier:

- Open the nuts and bolts on the flange connecting the top shell[1]* and bottom shell[2].*
- Remove the top cover[1] and keep it aside.
- Remove the throat plate cum reduction cone[4].
- Open the ash pit[10] plug from the bottom.
- Remove any materials on the grates[5],[6] and ash pit[10] and clean properly.
- Close the ash pit with the plug.
- Replace the throat cum reduction cone[4] on the circular plate support[3].
- Fix the air tuyeres[13] properly and check for any leaks through the pipes.
- Check the shaker rod[9] for free movement, if not adjust the horizontal grate[6] for its free movement and also check for any leak through the opening on the shaking rod.
- Add solid fuel through the throat into the reduction cone area. With the help of shaking rod ensure that this area is totally filled with the solid fuel.
- Place a properly cut gasket sheet ring on the flange[15] and fix the top shell[1] to the bottom shell[2], tightly with the bolt and nuts.
- Apply mud paste to the flange ring[15] to ensure proper sealing of the flange.
- Open the top lid[16] and slowly add sufficient fuel into the gasifier.

*The numbers refer to the parts list on Figure B-8.

182

- Close the lid tightly and apply mud seal to prevent air leakage into the gasifier.

- Fix the thermocouples in their positions.

Cyclone Separator:

- Connect the water inlet pipe[4]* to water source tank.

- Fill the water seal tank[11] with water and check that the water outlet pipe[6] dips in the water.

- Keep the water outlet pipe connection from the water seal tank, away from the working area.

- Maintain the water flow rate such that steady water level is maintained on the cyclone.

- Check the gasket[8] openings for free flow of water into the gasifier.

Notes:

- The air tuyeres and thermocouples need not be removed every time the gasifier is operated. Only periodic checking is required.

- Solid fuel can be added through the top lid whenever the gasifier is depleted of the solid fuel during operation.

Filter-cum-Surge-Tank:

- Open the drain pipe[6]** and drain any water collected in the drum and close it back.

- Open the top lid[3] and fill the main body[1] with filter material to a depth of 6" to 12" on the filter bed supporting plate[7].

- Replace the lid on the water seal[3] and fill it with either water or slurry of mud to prevent air leakage into the main body.

---

*Numbers refer to parts list on Figure B-9.
**Numbers refer to parts list on Figure B-10.

Ignition and Startup of the Gasifier Unit:

- Open the ignition port[8] and the valve connecting the blower[9].
- Light up a small cotton cloth soaked in kerosene and keep near the ignition port opening and air tuyeres.
- Operate the blower to suck air and the flame from the ignition port and air tuyeres.
- Keep drawing air through the blower until the fuel in the oxidation zone and reduction zones catches fire and starts burning.
- Check whether the gases from the blower outlet catch fire with a flame or not.
- Check that the temperature of the gases near the reduction cone attain the required value.
- If the steps (6) and (7) gives positive result, i.e., gases burn and the desired temperature is attained, close the ignition port[14] and switch over to the engine for drawing air to the gasifier.
- If the steps (6) and (7) shows negative results keep drawing air through the blower until it is ready for switching over to engine.
- Adjust the air flow rate to the gasifier to the desired value.
- Adjust the air-fuel (diesel) ratio to the engine manually such that proper engine exhaust is obtained.

Shut Down of the Gasifier Unit:

- Divert the gases from the filter drum to outside atmosphere/burner and flare them until all the combustible gases cease to burn.
- Seal the tuyere tubes openings with an asbestos plug or mud paste.
- Stop the water supply to the cyclone separator.

Operational Problems and Remedies:

A. Apparent Malfunctioning of the System

I - Gasifier Unit
a. Noncombustible gases
b. Poor flame quality of the burning gases

II - Engine Unit
a. Engine misfires
b. Engine exhaust becomes black
c. Engine derating/excessive diesel consumption/decrease in rpm

B. Indications for Malfunctioning (Gasifier)

- Temperature at the grate increases/decreases
- Pressure drop across the gasifier unit increases
- Flow rate of gases (inlet air) changes
- Gas quality deteriorates (during flaring)

C. Causes for Malfunctioning

- Leakage of air through different joints
- Accumulation of ash in the grate
- Choking of the throat plate
- Accumulation of particles/rust in the pipe line
- Gasifier unit is out of feed stock
- Improper air supply at the intake manifold before the engine

D. Remedies

- When the engine misfires or exhaust becomes smoky, adjust the air inlet valve before the engine.

- When the engine consumes excessive diesel along with producer gas and/or derates, etc., lock into the gasifier performance.

- When the gasifier does not give proper quality gases as per the indications mentioned, the following operations may be carried out.

  - Ensure that sufficient solid fuel is in the gasifier/if not add fuel to the gasifier

  - Check for air leakage at the following places
    (1) Gasifier flange
    (2) Water seal in the cyclone separator
    (3) Water seal in the filter drum

- Poke the air tuyeres, shake the fuel bed with the shaker rod. If these two exercises do not improve the quality of the gases (as indicated by proper reduction zone temperature and flame intensity of the fuel bed as seen from the air tuyeres), remove the top lid and poke the throat opening with a long rod to remove any choking at the throat plate.

Cyclone Separator:

The problems with the Cyclone separator are:

- Air entry into the cyclone due to stoppage of water supply. This results in poor quality of the gases and hence the engine performance is affected.

- Choking of the gasket openings. When this happens, the water supply into the cyclone reduces resulting in temperature rise of the gases and carry over of the particulate impurities along with the gases.

Drum Filter:

- Leakage of air through water seal
- Accumulation of water at the bottom of the drum

Remedies

- Check for leaks
- Clean the gasket openings in the cyclone separator
- Drain accumulated water in the filter drum

III. MAINTENANCE OF THE GASIFIER UNIT

<u>During operation for smooth running</u>:

- Manual shaking of the gasifier every 30 minutes or 1 hour
- Poking of air tuyeres every 30 minutes for 1 hour
- Periodic check up for:
  - -- gas temperature at the grate
  - -- flow rate of gases
  - -- pressure drop across the system
  - -- water seal in the cyclone separator and filter drum
- Removal of ash at the end of the run

<u>For longevity of the gasifier unit</u>:

- Replace the gasket at the flange when ever it is spoiled
- Check for the condition of the tuyeres tube openings exposed to oxidation zone. If found corroded, clean or replace the tubes.
- Replace if necessary the insulation covering the bottom part of the gasifier
- Clean the gasifier once a week
- Check all possible leaks in the system once a week
- Replace the gasket ring of the cyclone separator
- Clean the inner wall of the cyclone separator
- Clean the inner wall of the filter drum and paint if necessary
- Replace the filter medium periodically

OPERATING AND MAINTENANCE INSTRUCTIONS FOR THE U.S. TEST GASIFIER/ENGINE SYSTEM

INTRODUCTION

The gasifier system converts the energy content of biomass into a low BTU producer gas suitable for utilization in an internal combustion engine. The gasifier system, as shown in Figure B-11, consists of three basic components: the gasifier, the scrubber and the internal combustion engine.

The gasifier converts the biomass to producer gas by incomplete combustion of the biomass. These gaseous products are then directed to the scrubber where the gases are cooled and cleaned. The cleaned gas is then directed to the internal combustion engine where the energy is converted to usable shaft horsepower. A cross-section of the gasifier and gas cleanup system is presented in Figure B-12.

SUITABLE FUELS

In general, most biomass or carbon bearing combustible material is suitable for operation of the gasifier if three criteria are met. These criteria are as follows:

- Size: The material size must be between 2 mesh and 20 mesh in size. If the material is too fine it is almost impervious to air and gases and, consequently, the gasification and combustion process cannot proceed. If the material is too coarse the fuel will not flow properly through gasifier fuel magazine. In addition, with fuel that is too coarse there are voids in the fuel bed which make the combustion process difficult to control.

- Moisture: The biomass material must be below 20% moisture on a wet or "as received" basis. If the moisture content is too high the gas generated will have high tar content. This tar will cause the valves and piston rings to stick on the internal combustion engine and lead to engine failure.

- Ash: The biomass material must have an ash or noncombustible content of 5% or less. If the ash content is too high the gasification process will not proceed properly. The ash present will cause the gasification process to "climb" up the fuel magazine due to the accumulation of noncombustible ash in the lower portion of the gasifier chamber. In addition, large quantities of clinkers will be formed from the ash such that the gasifier chamber will become fouled, requiring a shutdown of the system and a complete removal of all fuel and clinkers from the fuel magazine.

Figure B-11
U.S. Test Gasifier-Engine System

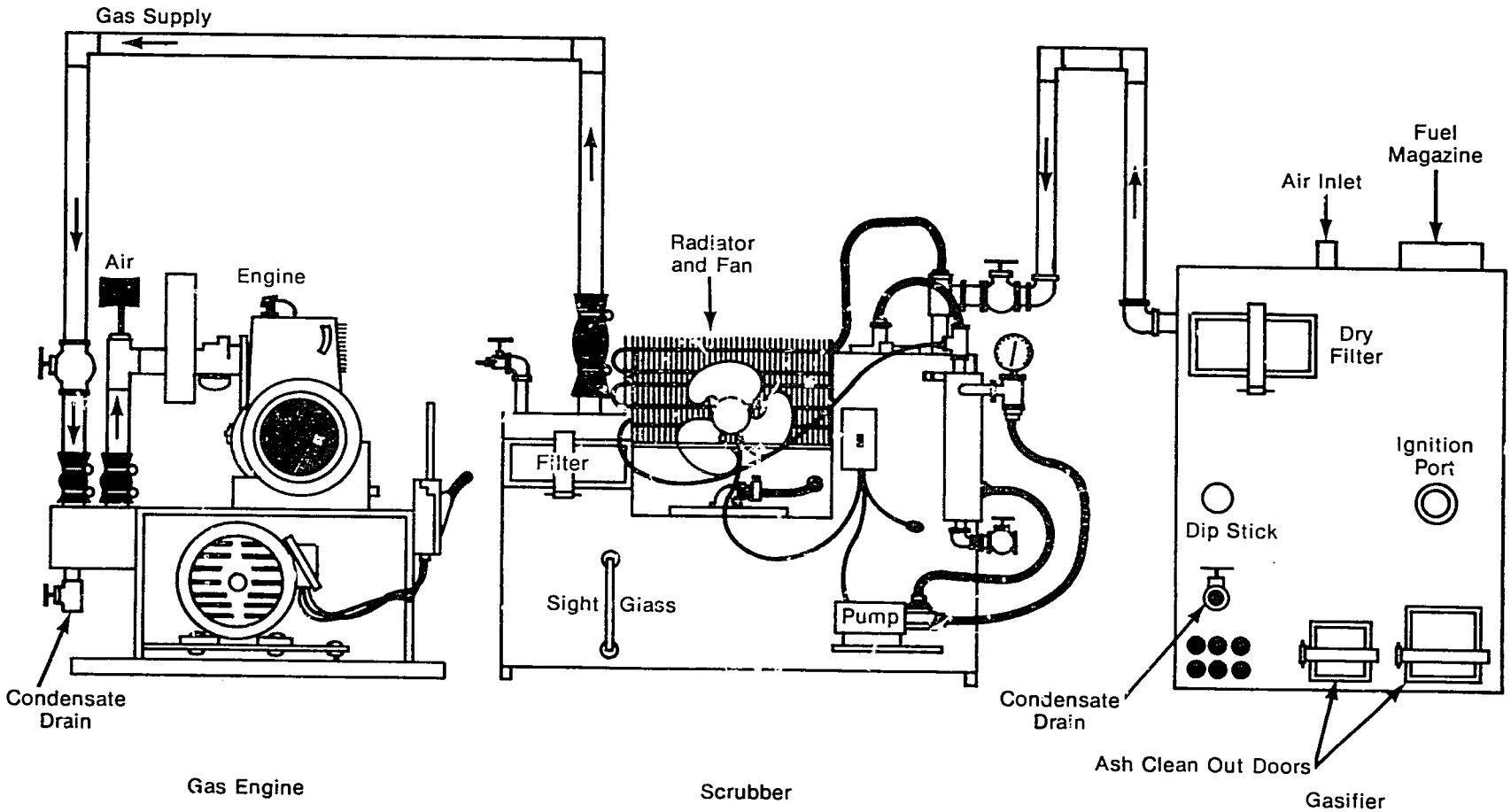

Figure B-12
Cross-Section of U.S. Test Gasifier and Gas Cleanup System

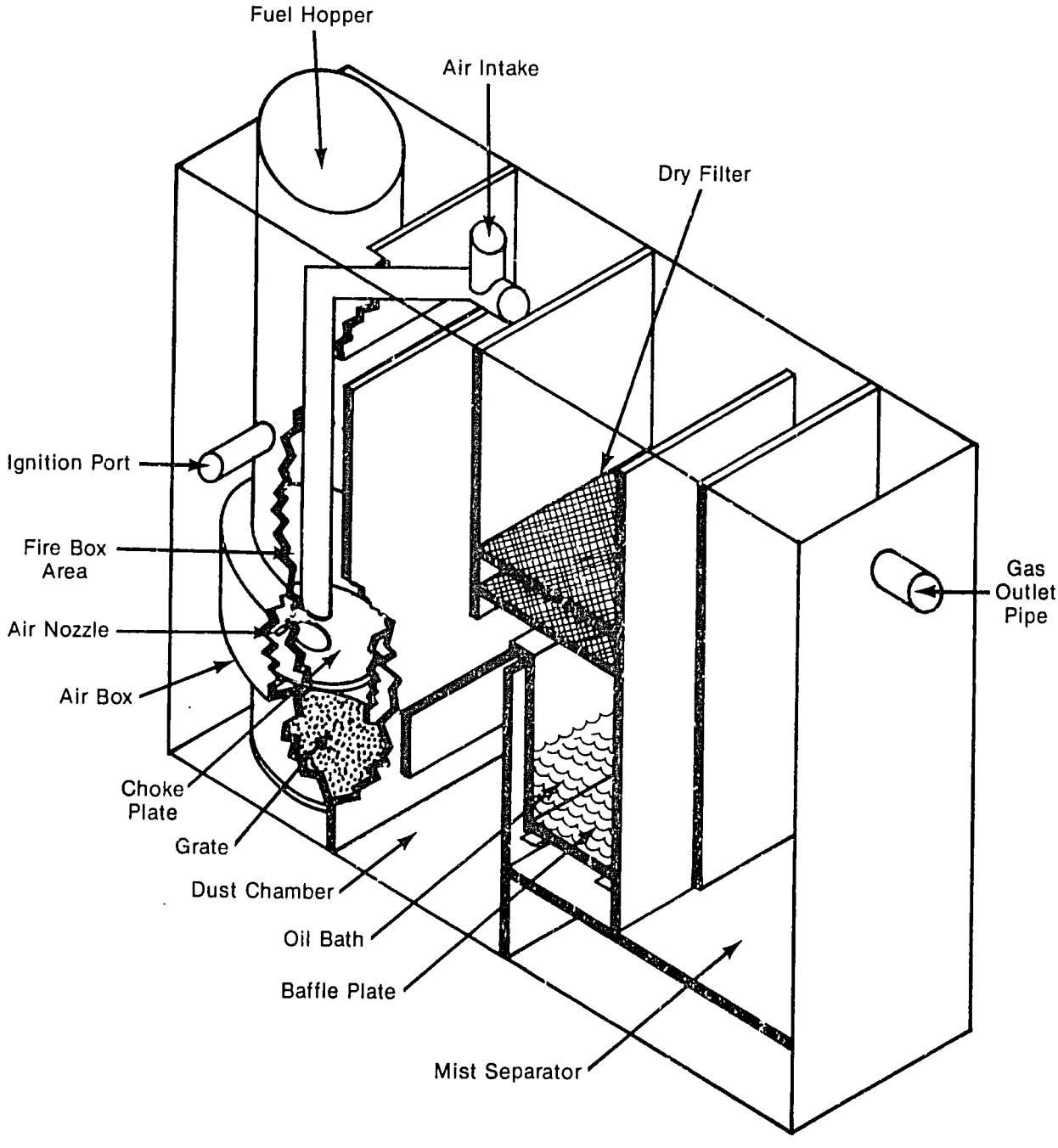

176

FUEL RECOMMENDATIONS

The best fuel for the gasifier is wood charcoal. Due to its relatively low ash content and almost total lack of tar forming material it will give the most satisfactory performance of all common fuels. Sawdust and small wood chips are also suitable. However, the gases produced by wood chips or sawdust have a higher concentration of tars than gases produced from charcoal. This tar will necessitate more maintenance to the scrubber and engine. In general, most agricultural and crop residues are too moist or have too high an ash content for proper gasification in this type of gasifier.

STARTUP OF GASIFIER

1. Check engine lubricating oil level and gasoline level.

2. Check scrubber water level; add or drain water as required.

3. Check gasifier clean out and grate for clinkers or excessive ash buildup. Clean as required.

4. Check the oil level in the gasifier -- add if required. Oil must be peanut oil, not lubricating oil.

5. Check fuel level in gasifier fuel magazine -- add fuel to fill magazine.

   NOTE: If the gasifier fuel magazine is empty prior to start-up of the system (as is the case on a new gasifier or one which has been cleaned out), charcoal must be used to start the gasifier system. Fill the fuel magazine to the ignition port with charcoal (size of charcoal must be 2 to 20 mesh in size). Then, fill the fuel magazine the rest of the way with fuel. The use of charcoal for initial startup minimizes fouling the internal combustion engine combustion chamber with tars.

6. Start the radiator cooling fan on the scrubber.

7. Start the scrubber water circulating pump.

8. Start engine on gasoline. Let engine run at 1/2 throttle. Allow engine to run and warmup for two to three minutes.

9. While the engine is warming up, open the ignition port. Take a 4-inch square piece of paper and roll it to a cigar shape and insert it in the ignition port.

177

10. After the engine has warmed up light the paper with a match.

11. Open producer gas valve slowly until engine noticeably begins to bog down or misfire.

12. As the engine runs, watch the burning paper at the ignition port. When the suction from the engine begins to draw the flame into the ignition port, replace the cap on the port.

13. Allow engine to run for five to six minutes. During this time period the engine performance should be monitored and the producer gas valve opened to the greatest extent possible without causing the engine to die. This careful adjustment of the producer gas valve will maximize the suction or draft created by the engine through the gasifier and quicken the startup of the gasifier.

14. Slowly open the air control valve. If the engine begins to slow down the gasifier is not yet producing gas. Close air control valve and wait two to three minutes and repeat the procedure. If the engine speeds up producer gas is being produced in the gasifier and burned in the engine.

15. If the producer gas is being produced in the gasifier, slowly attempt to open both the producer gas valve and the air control valve. Slowly and carefully adjust the valves to maximize the engine speed.

16. Allow the engine to run at these conditions, adjusting the air and producer gas valve as required to maximize engine performance.

17. When satisfactory operation of the engine has been obtained, shut off the gasoline at the engine fuel tank.

18. The engine will continue to run, burning the producer gas. Continue to manually adjust the air and producer gas valves to maximize engine performance or to meet the requirements of the system being operated. After the engine has been operated on producer gas for 15 to 20 minutes, a quasi equilibrium will exist, and the manual adjustments to the air and producer gas valves will be minimal if a constant load on the engine is present.

19. Monitor fuel supply and add fuel as required to keep fuel in the fuel magazine within 4 inches of the top.

SHUTDOWN PROCEDURE

1. Slow engine to approximately 1/2 normal operating speed by manually adjusting the producer gas and air control valves.

2. Open gasoline supply to the carburator.

3. Close producer gas valve and air control valve on the engine and allow the engine to continue to run on gasoline.

4. Allow the engine to run for several minutes. If at all possible, run the engine on gasoline at maximum load and engine speed. Slow the engine down and remove the load. Allow the engine to idle for two minutes and shut off engine.

   NOTE: This procedure assists in preventing tar build-up in the engine combustion chamber which results in sticking valves and piston rings.

5. Put caps on fuel magazine and combustion air inlet tubes on the gasifier.

6. Shut off the fan and circulating pump on the scrubber.

7. Check around engine and gasifier system for hot ashes or similar hazards.

8. Do not close area in which the gasifier is located. Allow sufficient ventilation to continuously provide fresh air and to minimize the probability of carbon monoxide buildup.

EMERGENCY SHUTDOWN PROCEDURE

1. Close producer gas and air valves. This will immediately stop the engine.

2. Put caps on the fuel magazine and combustion air inlet.

3. When the system is stopped and no possibility of personal danger exists, inspect the system carefully for defects or damage and possible hazards such as fire, hot ashes or other safety hazards.

4. If at all possible restart the system and perform an orderly shutdown as indicated in the "SHUTDOWN PROCEDURE" section before the engine cools off if it can be done without danger of physical injury or damage to the system.

MAINTENANCE

Every four hours of operation:

1. Check engine lubricating oil level. Add engine oil as required.

2. Check gasifier oil level. Add gasifier oil as required.

3. Check scrubber liquid level. Add or drain liquid as required.

Every eight hours:

1. Remove spark plug, clean and regap.

2. Drain condensate at valves in gasifier and condensate box at the engine.

Every 50 hours:

1. Drain engine lubricating oil and replace with new lubricating oil.

2. Drain gasifier oil and replace with the recommended oi.

3. Drain scrubber fluid and replace with recommended fluid.

4. Remove dry filters in gasifier and scrubber. Wash foam in hot soapy water and drain. Remove and replace wood shavings.

5. Check ash levels in the gasifier and clean out doors. Remove ash as required.

6. Check for water or dirt accumulation in the sediment bowl at the gasoline fuel tank. Remove and drain if required.

Every 200 hours:

1. Remove engine head and carburetor assembly and exhaust.

2. Inspect for carbon or tar build-up and remove as required.

3. Replace head using a new head gasket.

4. Replace exhaust and carburetor assembly.

OILS, FLUIDS AND OTHER SUPPLIES

Engine oil

Use 10W-40 or 30W engine which complies with SAE Type S.E. specifications.

Gasifier oil

Use only peanut oil or other recommended vegetable-type oil. Do not use lubricating oil.

Scrubber fluid

Fill scrubber to normal operating level with clean water. Add one cup of scrubber soap and one quart of diesel fuel.

SAFETY PRECAUTIONS

General

These safety precautions are not intended to be an all inclusive delineation of possible hazards. These precautions do, however, point out areas of possible hazards. Furthermore, it is expected that this system will be operated by experienced technicians or mechanics who have experience in the operation of mechanical and thermal systems.

DO NOT OPERATE GASIFIER SYSTEM UNLESS AN APPROVED TYPE OF CARBON MONOXIDE DETECTOR WHICH CONTINUOUSLY MONITORS CARBON MONOXIDE IS INSTALLED AND FUNCTIONAL IN THE IMMEDIATE VICINITY OF THE GASIFIER.

PRODUCER GAS

The gas generated by this gasifier system contains very high concentrations of carbon monoxide (CO). Carbon monoxide is very hazardous to humans as blood has a higher affinity for carbon monoxide than for oxygen. Thus, a person can be overcome by carbon monoxide and die even if plenty of oxygen is available in the air the person is breathing. ONE BREATH of carbon monoxide-laden air can be fatal under some situations.

Symptoms of carbon monoxide poisoning include headaches, nausea, and lack of ability to concentrate. LEAVE the area of the gasifier IMMEDIATELY if any of these symptoms are apparent.

1. Always operate the gasifier in an open area such as outside or in a room with a large quantity of positive ventilation.

2. Never completely close up the room in which the gasifier is set up or stored.

3. Periodically recalibrate the carbon monoxide monitor to ascertain its accuracy.

4. Periodically test the carbon monoxide monitor to ascertain it functions properly.

5. Carbon monoxide accumulation can even be a problem in unenclosed areas if conditions are right. Be especially cautious when the ambient air around the system is relatively calm, when working downwind from the system, or when working at a lower elevations then the system.

6. CARBON MONOXIDE TENDS TO ACCUMULATE IN DEPRESSIONS AND OPENINGS BELOW GRADE. Never enter a manhole or similar area in the vicinity of a gasifier without purging the area or manhole with a forced air blower and testing the air for carbon monoxide and presence of adequate oxygen. Take other adequate precautions as dictated for entering confined areas where harmful gases may accumulate.

GENERAL SAFETY PRECAUTIONS

1. Do not operate the system unless you have read and understood the Operation and Maintenance and Safety manual for the system.

2. The gasifier and the engine are heat producing devices. Be careful not to come in contact with hot surfaces.

3. Make sure all belts, shafts, pulleys and other moving parts are properly guarded prior to system operation.

4. Always make sure that adequate ventilation exists prior to operation of the system. Do not operate the system in an enclosed area unless an engineered positive ventilation system has been designed and installed in the enclosed area. In addition to the positive ventilation system, a separate and sealed exhaust system for the engine exhaust gases must be provided to ensure removal of the engine exhaust from the area.