Report No. 90-11

PN-ABJ-775

61354

Office of Energy
Bureau for Science and Technology
The United States Agency for International Development

SCREENING OF COMBINED CYCLE ALTERNATIVES INCLUDING REPOWERING OPTIONS IN THE PHILIPPINES

By:
Bechtel National, Inc.
1601 North Kent Street, Suite 914
Arlington, Virginia 22209, U.S.A.

Conventional Technical Assistance Project
Contract No. LAC-5724-C-00-5126-00

October 1990

TABLE OF CONTENTS

TABLE OF CONTENTS

SECTION 1 - SUMMARY

1.0 Introduction and Background 1-1

1.1 Executive Summary 1-2

1.1.1 300 MW Nominal Capacity Combined Cycle Power Plant at Bataan 1-2

1.1.2 Conversion of Existing Gas Turbines at Bataan from Simple Cycle to Combined Cycle 1-2

1.1.3 Repowering Existing Malaya Unit 2 with a Gas Turbine 1-3

1.1.4 Repowering Existing Sucat Unit 4 with Gas Turbines 1-3

1.1.5 Estimates of Capital Costs and Cost of Electricity Generation 1-4

1.1.6 Environmental Considerations 1-4

1.2 Conclusions and Recommendations 1-4

SECTION 2 - PLANT DESCRIPTIONS

2.0 Introduction and Background 2-1

2.1 The 300 MW Nominal Capacity Combined Cycle Power Plant at Bataan 2-2

2.1.1 Plant Description 2-2

2.1.2 Expected Plant Performance 2-4

2.1.3 Consideration of Gas Turbine Size 2-4

2.2 Conversion of Existing Gas Turbines at Bataan from Simple Cycle to Combined Cycle 2-5

2.2.1 Plant Description 2-5

2.2.2 Expected Plant Performance 2-7

TABLE OF CONTENTS (Continued)

2.3 Repowering Malaya Unit 2 with Gas Turbine 2-8

2.3.1 Plant Description 2-8

2.3.2 Expected Plant Performance 2-10

2.4 Repowering Sucat Unit 4 with Gas Turbines 2-13

2.4.1 Plant Description 2-13

2.4.2 Expected Plant Performance 2-15

SECTION 3 - COST AND SCHEDULE

3.0 Introduction 3-1

3.1 Capital Cost Estimates 3-1

3.2 Operation and Maintenance Costs 3-3

3.3 Project Schedules 3-3

3.4 Expenditure Schedule 3-6

SECTION 4 - ENVIRONMENTAL CONSIDERATIONS

4.0 Introduction 4-1

4.1 Air Quality Standards 4-1

4.1.1 Stationary Source Emission Standards 4-1

4.1.2 National Ambient Air Quality Standards 4-1

4.2 Impact on Air Quality - Gas Turbine Power Plants 4-1

4.2.1 Estimated Emissions from Gas Turbines 4-1

4.2.2 Impact on Ambient Air Quality - Gas Turbine Power Plants 4-2

4.3 Noise 4-2

4.3.1 Environmental Quality Standards for Noise 4-2

4'

TABLE OF CONTENTS (Continued)

4.4 National Pollution Control Commission (NPCC) Effluent Standards 4-3

4.4.1 Effluent Standards 4-3

4.4.2 Gas Turbine Plant Effluents 4-3

SECTION 5 - ECONOMIC AND FINANCIAL EVALUATIONS

5.0 Introduction 5-1

5.1 Assumptions 5-2

5.2 Methodology 5-2

5.3 Results of the Evaluation 5-5

5.4 Sensitivity Analyses 5-7

5.5 Financing Options 5-8

5.6 Conclusions 5-10

SECTION 6 - CONCLUSIONS AND RECOMMENDATIONS

6.0 Summary 6-1

6.1 Conclusions 6-1

6.2 Recommendations 6-7

APPENDICES

A. Design Criteria A-1

B. Major Equipment List - New Combined Cycle Plant at Bataan B-1

C. Major Equipment List - Conversion of Existing Gas Turbines to Combined Cycle Plant at Bataan C-1

D. Major Equipment List - Repowering Malaya Unit 2 with Gas Turbine D-1

TABLE OF CONTENTS (Continued)

E. Major Equipment List - Repowering Sucat Unit 4 with Gas Turbines E-1

F. Data and Assumptions - Bataan New 300 MW; Bunker C F-1

G. Statement by the Office of Energy G-1

TABLES

1.1 Summary of Performances, Costs, and Schedules

2.1.1 Estimated Plant Performance - New Combined Cycle Power Plant, Bataan

2.1.2 Electricity Generation and Fuel Consumption - New Combined Cycle Power Plant, Bataan

2.2.1 Estimated Plant Performance - Existing GT Conversion at Bataan

2.2.2 Electricity Generation and Fuel Consumption - Existing GT Conversion at Bataan

2.3.1 Estimated Plant Performance - Unit 2 Repowering at Malaya

2.3.2 Electricity Generation and Fuel Consumption - Unit 2 Repowering at Malaya

2.4.1 Estimated Plant Performance - Unit 4 Repowering at Sucat

2.4.2 Electricity Generation and Fuel Consumption - Unit 4 Repowering at Sucat

3.1 Order of Magnitude Capital Cost Summary

3.2 Expenditure Schedule

4.1 Stationary Source Emission Standards

4.2 National Ambient Air Quality Standards

4.3 Ambient Quality Standards for Noise

4.4 NPCC Effluent Standards

6

TABLE OF CONTENTS (Continued)

5.1.1 Project Assumptions - Distillate Fired Options

5.1.2 Project Assumptions - Bunker C Fired Options

5.3.1 Constant Dollar Levelized Power Price

6.1 Summary of Performances, Costs, and Schedules

FIGURES

3.3.1 Milestone Schedule - 300 MW Combined Cycle Power Plant at Bataan

3.3.2 Milestone Schedule - Conversion of Existing GTs at Bataan to Combined Cycle

3.3.3 Milestone Schedule - Repower with GTG Malaya Unit 2, Case 1

3.3.4 Milestone Schedule - Repower with GTG Malaya Unit 2, Case 2

3.3.5 Milestone Schedule - Repower with GTGs Sucat Unit 4

5.3.1 Components of Levelized Cost

5.3.2 Bataan New 300 MW Combined Cycle Plant - Distillate Fired

5.3.3 Bataan New 300 MW Combined Cycle Plant - Bunker C Fired

5.3.4 Conversion of Existing GT at Bataan - Distillate Fired

5.3.5 Conversion of Existing GT at Bataan - Bunker C Fired

5.3.6 Malaya 2 Case 1 Repowering - Distillate Fired

5.3.7 Malaya 2 Case 1 Repowering - Bunker C Fired

5.3.8 Malaya 2 Case 2 Repowering - Distillate Fired

5.3.9 Malaya 2 Case 2 Repowering - Bunker C Fired

TABLE OF CONTENTS (Continued)

5.3.10 Sucat Repowering - Distillate Fired

5.3.11 Sucat Repowering - Bunker C Fired

EXHIBITS

A Summary of Malaya Unit 2 Repowering from Hitachi Report

B Heat Balance Diagram for Malaya Unit 2 Repowering from Hitachi Report

DRAWINGS AND DIAGRAMS

300 MW Combined Cycle Power Plant at Bataan

2.1.1-1 PA-001 Plot Plan

2.1.1-2 M-001 Schematic Diagram

2.1.1-3 E-001 Electrical Single Line Diagram

2.1.2-1 HB1 Heat Balance Diagram - 100% output, simple cycle, design ambient conditions

2.1.2-2 HB2 Heat Balance Diagram - 100% output, simple cycle, annual average ambient conditions

2.1.2-3 HB3 Heat Balance Diagram - 100% output, combined cycle, design ambient conditions

2.1.2-4 HB4 Heat Balance Diagram - 100% output, combined cycle, annual average ambient conditions

Conversion of Existing Gas Turbines at Bataan

2.2.1-1 PA-002 Plot Plan

2.2.1-2 M-002 Schematic Diagram

2.2.1-3 E-002 Electrical Single Line Diagram

TABLE OF CONTENTS (Continued)

Repowering Malaya Unit 2

2.3.1-1 PA-003 Plot Plan

2.3.1-2 M-003 Schematic Diagram

2.3.1-3 E-003 Electrical Single Line Diagram

2.3.2-1 HB5 Heat Balance Diagram - 100% output, simple cycle, design ambient conditions

2.3.2-2 HB6 Heat Balance Diagram - 100% output, simple cycle, annual average ambient conditions

2.3.2-3 HB7 Heat Balance Diagram - 100% output, repowering mode, design ambient conditions

2.3.2-4 HB8 Heat Balance Diagram - 100% output, repowering mode, annual average ambient conditions

Repowering Sucat Unit 4

2.4.1-1 PA-004 Plot Plan

2.4.1-2 M-004 Schematic Diagram

2.4.1-3 E-004 Electrical Single Line Diagram

2.4.2-1 HB9 Heat Balance Diagram - 100% output, simple cycle, design ambient conditions

2.4.2-2 HB10 Heat Balance Diagram - 100% output, simple cycle, annual average ambient conditions

2.4.2-3 HB11 Heat Balance Diagram - 100% output, repowering mode, design ambient conditions

2.4.2-4 HB12 Heat Balance Diagram - 100% output, repowering mode, annual average ambient conditions

.9.

SECTION 1 - SUMMARY

SECTION 1 - SUMMARY

1.0 INTRODUCTION AND BACKGROUND

In order to meet the growing power demand in the Luzon Grid for the years 1990 - 1995, the National Power Corporation (NPC) has to install short lead time generating units. To meet this urgent requirement, NPC is considering construction of a gas turbine combined cycle plant and repowering of a few existing oil-fired plants with gas turbines as well as repowering some existing gas turbines with steam turbines. NPC has received proposals from private firms to repower two existing oil-fired power plants with gas turbines using light distillate oil.

NPC requested the U.S. Agency for International Development for technical assistance in assessing these potential projects. In response to this request, the Conventional Energy Technical Assistance (CETA) Project Contractor, Bechtel National, Inc. of the Office of Energy, A.I.D., was called upon to assist NPC. CETA sent a team of engineers to Manila in May 1990, to visit several existing thermal power plants to evaluate the potential for repowering and for new combined cycle plants. This team provided its preliminary findings and recommendations to NPC during the site visit.

As a result of the completed field work and preliminary conclusions by the CETA team in May 1990, NPC requested CETA to perform a screening study for the following alternatives:

- Construction of a 300 MW capacity combined cycle plant on a new site at Bataan

- Conversion of existing gas turbines at Bataan from simple cycle to combined cycle

- Repowering of Malaya Unit 2 with gas turbines

- Repowering of Sucat Unit 4 with gas turbines

CETA has completed the screening study for these alternatives. This report covers the results of this study.

The report describes the conceptual design of the plant and provides an estimate of the expected plant performance for each alternative. It also provides major equipment sizes, estimated capital costs, electricity generation costs, conclusions of the study and recommendations.

1.1 EXECUTIVE SUMMARY

1.1.1 300 MW Nominal Capacity Combined Cycle Power Plant at Bataan

This is a new plant that NPC is proposing to construct. The plant will consist of three G.E.7111EA (General Electric Frame 7EA) gas turbines, three unfired heat recovery steam generators, one dual steam admission, condensing type, steam turbine with necessary auxiliaries. Fuel for the gas turbines will be distillate or treated Bunker C oil. Sea water will be used for condenser cooling. Power generated by the gas turbine generators and the steam turbine generator will be stepped up from 13.8 kV to 230 kV for transmission to Harmosa substation. The plant is expected to generate a continuous capacity of 315.6 MW. Additional details of the plant are discussed Section 2.1.

1.1.2 Conversion of Existing Gas Turbines at Bataan from Simple Cycle to Combined Cycle

The plant will include four existing Alsthom Frame 6 gas turbines, four new unfired heat recovery steam generators, one dual steam admission, condensing type, steam turbine with necessary auxiliaries. Fuel for the gas turbines will be distillate or treated Bunker C oil. This will increase the plant capacity from 125 MW to 186.8 MW if Bunker C oil is used. Sea water will be used for condenser cooling. Power generated by the new steam turbine generator will be stepped up from

13.8 kV to 230 kV and supplied to the existing 230 kV substation. Additional details of the plant are discussed in Section 2.2.

1.1.3 Repowering Existing Malaya Unit 2 with a Gas Turbine

The concept of repowering this 350 MW oil fired unit was proposed by ASEA Brown Boveri (ABB) to NPC. Hitachi was requested by NPC to study this possibility.

Two cases are considered for repowering based on the Technical Report for Repowering prepared by Hitachi in June 1990. In Case 1 of repowering, it is assumed that the new equipment for the plant will include one ABB Model GT 11N gas turbine generator, one unfired waste heat recovery economizer and auxiliaries. The existing boiler reheater, cold and hot reheat steam pipelines, reheater safety valves and turbine steam paths will be replaced. Fuel for the gas turbines will be distillate or treated Bunker C oil. High pressure feedwater pipelines to and from the existing unit 2 will be required. Power generated by the new gas turbine generator will be stepped up from 13.8 kV to 115 kV and supplied to the existing substation and will add 85.5 MW to the plant capacity if Bunker C oil is used. In Case 2 of repowering, it is assumed that Hitachi gas turbine Model F7EA will be used and existing reheater size increase, safety valve capacity increase, and partial replacement of the turbine steam path will be required. This will add 67.7 MW to the plant capacity if Bunker C oil is used. Section 2.3 gives additional details.

1.1.4 Repowering Existing Sucat Unit 4 with Gas Turbines

This project was proposed to the NPC by John Brown Engineering of the U.K. The new equipment for the existing nominal 300 MW plant will include two John Brown Engineering Frame 6 gas turbine generators, two unfired waste heat recovery economizers and auxiliaries. Fuel for the gas turbines will be distillate or treated Bunker C oil. This will add 81.3 MW to the plant if Bunker C oil is used. High pressure feedwater pipelines to and from the existing unit 4 will be required. Power

generated by the gas turbine generators will be stepped up from 13.8 kV to 115 kV and supplied to the existing substation. Section 2.4 gives additional details.

1.1.5 Estimates of Capital Costs and Cost of Electricity Generation

Estimated plant performance, installed cost of new equipment, constant dollar levelized cost of electricity generation, and the schedule for commercial operation for each alternative are summarized in Table 1.1.

The data summarized in Table 1.1 are for incremental plant generating capacity and does not include existing plant generating capacity.

Additional details on costs and schedules are given in Section 3 and on economic and financial evaluation in Section 5.

1.1.6 Environmental Considerations

The estimates of uncontrolled emissions of sulfur dioxide, nitrogen oxide and carbon monoxide are given in Section 4. These emission levels are significantly below the current permissible maximum emission levels in Philippines. However, NPC needs to perform ambient air quality analysis before proceeding with the projects.

1.2 CONCLUSIONS AND RECOMMENDATIONS

The five alternative schemes for power generation covered by this study are ranked in the order of preference as follows based on the estimated levelized cost of electricity generation with treated Bunker C oil firing and the associated technical risks:

- Conversion of existing gas turbines at Bataan from simple cycle to combined cycle.

- A new 300 MW nominal capacity combined cycle plant at Bataan.
- Repowering Malaya Unit 2 as described in case 2
- Repowering Malaya Unit 2 as described in case 1
- Repowering Sucat Unit 4

The advantages and disadvantages of each alternative are listed in Section 6.

Note that the ranking of repowering Malaya Unit 2 Case 1 and Case 2 is reversed if the fuel is switched from Bunker C oil to distillate oil.

We recommend that NPC pursue the following actions:

- Perform preliminary engineering for the following:

  1. A new 300 MW nominal capacity combined cycle plant at Bataan.
  2. Conversion of the existing gas turbines at Bataan to combined cycle plant

- Perform further detailed studies for Malaya #2 and Sucat #4 repowering projects since the screening studies indicate that these projects are associated with higher cost of electricity generation and higher technical risks. The higher technical risks are due to the current conditions of the existing boilers and steam turbine generators being unknown and the extent of the modifications required to make repowering successful.

- If NPC wishes to consider the repowering projects further, it is recommended that NPC request the manufacturers of the existing boilers and steam turbine generators to examine their present conditions, define the changes or upgrading needed for repowering and

provide price quotes and schedules for making these changes. Only after receiving such information, can NPC review the impact of the changes on the existing plant, equipment and systems, reevaluate the technical risks of the projects, and develop reliable estimates for electricity generation cost.

10

TABLE 1.1

SUMMARY OF PERFORMANCES, COSTS AND SCHEDULES

Alternatives	A	B	C	D	E
Description	New Comb. Cycle Plant at Bataan	Convert GTs at Bataan	Malaya #2 Case 1	Malaya #2 Case 2	Sucat #4
1. Increase in plant output, MW (see Note 1)	335.7 (315.6)	65.7 (61.8)	91 (85.5)	72 (67.7)	86.5 (81.3)
2. Increase in annual electricity generation @ 75% Capacity Factor, kWhrs x 10^6 (see Note 1)	2205.6 (2073.3)	1014.2 (953.5)	597.9 (561.7)	473.1 (444.8)	568.3 (534.1)
3. Increase in annual fuel consumption, Btu x 10^9 (see Note 1)	17044 (16342)	6975 (6687.6)	5686 (5451.7)	5556.1 (5327.2)	5424.3 (5200.8)
4. Decrease in annual heat input to boiler, Btu x 10^9	NA	NA	426.4	1947.8	137.8
5. Installed cost of new equipment & materials Dollars x 10^6 (see Note 2)	168	63	43	37	43
Dollars/kW	500	959	473	514	497
6. Levelized cost of increased electricity generation, cents/kWhr (see Note 1)					
a. At 9% discount rate	4.00 (3.24)	3.56 (2.93)	4.56 (3.65)	4.64 (3.46)	4.93 (4.02)
b. At 12% discount rate	4.10 (3.39)	3.64 (3.01)	4.64 (3.74)	4.73 (3.55)	4.98 (4.08)
c. At 15% discount rate	4.18 (3.48)	3.71 (3.08)	4.72 (3.83)	4.82 (3.65)	5.03 (4.14)
7. Time required to generate power in simple cycle after award of GT contract, months	19 (1st Gt)	NA	19	19	19
8. Time required to generate power in combined cycle after award of GT contract, months	24	23	20	20	21

Notes: 1. Numbers in parenthesis are with treated Bunker C oil firing
2. Excludes initial spare parts

SECTION 2 - PLANT DESCRIPTIONS

SECTION 2 - PLANT DESCRIPTIONS

2.0 INTRODUCTION AND BACKGROUND

In order to cope with the growing power demand in the Luzon Grid for the year 1990 - 1995, the National Power Corporation (NPC) has to install short lead time generating units. To meet this urgent requirement, NPC is considering construction of a gas turbine combined cycle plant and repowering of a few existing oil fired plants with gas turbines, as well as repowering some existing gas turbines with steam turbines. NPC has received proposals from private firms to repower two existing oil fired power plants with gas turbines using light distillate oil.

NPC requested the U.S. Agency for International Development for technical assistance in assessing these potential projects. In response to this request, the Conventional Energy Technical Assistance (CETA) Project contractor, Bechtel National, Inc., of the Office of Energy, A.I.D., was called upon to assist NPC. CETA sent a team of engineers to Manila in May 1990, to visit several existing thermal power plants to evaluate the potential for repowering and for new combined cycle plants. This team visited power plants at Sucat, Manila, Malaya, Calaca and Bataan. The team also visited the Nuclear Power Plant Site. After the site visits, the team provided NPC its preliminary findings and recommendations.

As a result of the completed field work and preliminary conclusions by the CETA team in May 1990, NPC requested CETA to perform a screening study for the following alternatives:

- Construction of a 300 MW nominal capacity new combined cycle plant at Bataan

- Conversion of existing gas turbines at Bataan from simple cycle to combined cycle

- Repowering of Malaya Unit 2 with gas turbine

- Repowering of Sucat Unit 4 with gas turbines

This report is prepared in response to the foregoing NPC request.

2.1 THE 300 MW NOMINAL CAPACITY COMBINED CYCLE POWER PLANT AT BATAAN

2.1.1 Plant Description

The proposed 300 MW nominal capacity combined cycle power plant at Bataan will be located near the existing oil fired thermal power plant on a new site as shown on the plot plan Drawing 2.1.1-1 (No. PA-001).

The design ambient conditions and other design parameters for the plant are listed in Appendix A.

The power plant schematic diagram is shown on Drawing 2.1.1-2 (No. M001). The plant will consist of three General Electric Model No. 7111EA gas turbine generators (GTs) which will use distillate oil or treated Bunker C oil as fuel. Steam or water injection to control NOx emissions may be required based on the ambient air quality conditions. However, these requirements are not considered in the study. Sulfur dioxide emissions will be controlled by limiting the sulfur content of the fuel. Each GT will have a rating of 74 MW at the site design ambient conditions based on distillate oil firing.

Each GT will exhaust into a separate unfired heat recovery steam generator (HRSG) to produce steam at two pressure levels. A gas bypass stack will be provided to facilitate GT operation in simple cycle mode. The economizer of each HRSG will receive feedwater at 220F from a common deaerator through a set of feedwater pumps. A minimum stack gas temperature of 300F will be maintained to prevent back end corrosion.

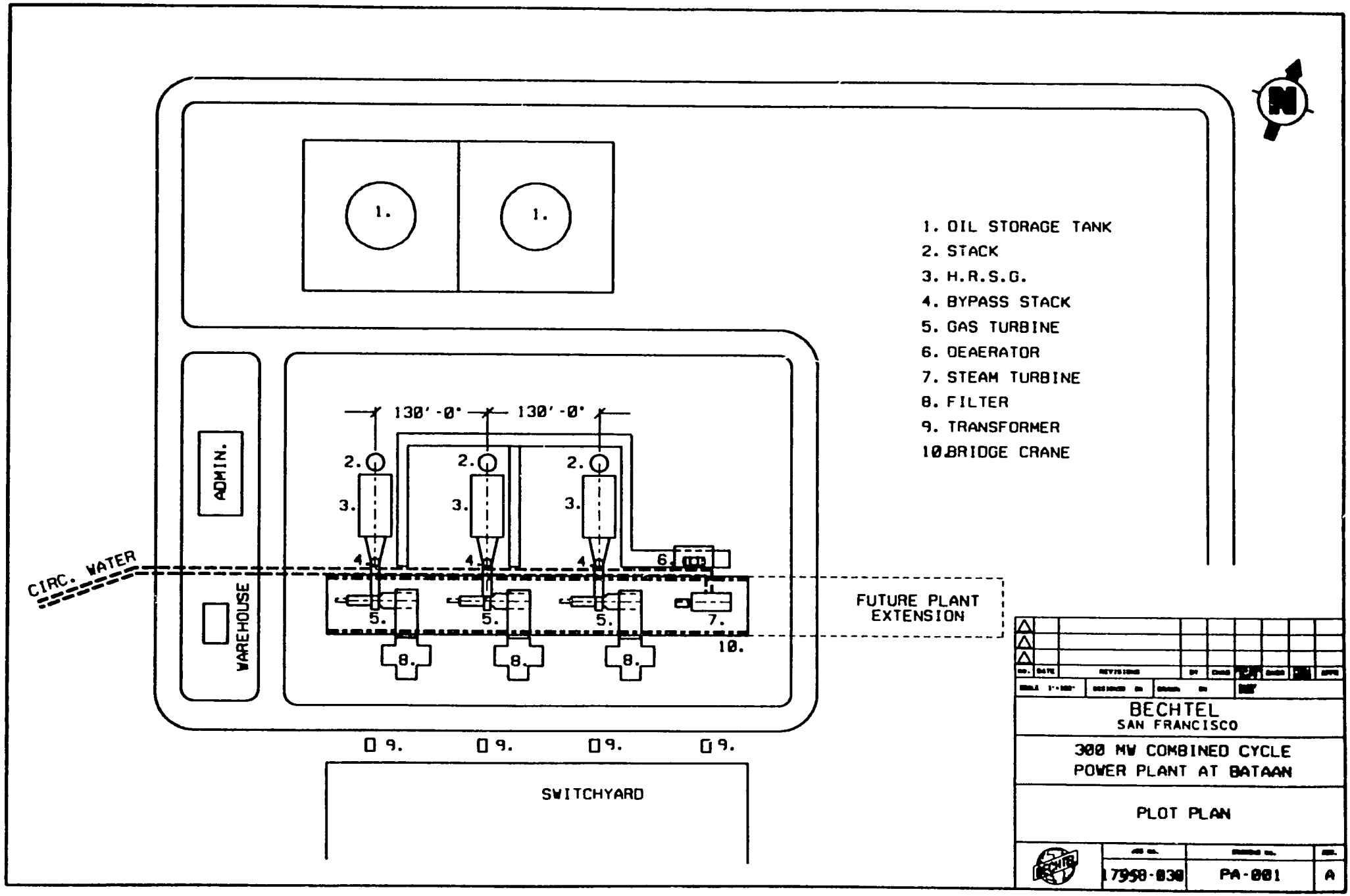

DRAWING 2.1.1-1

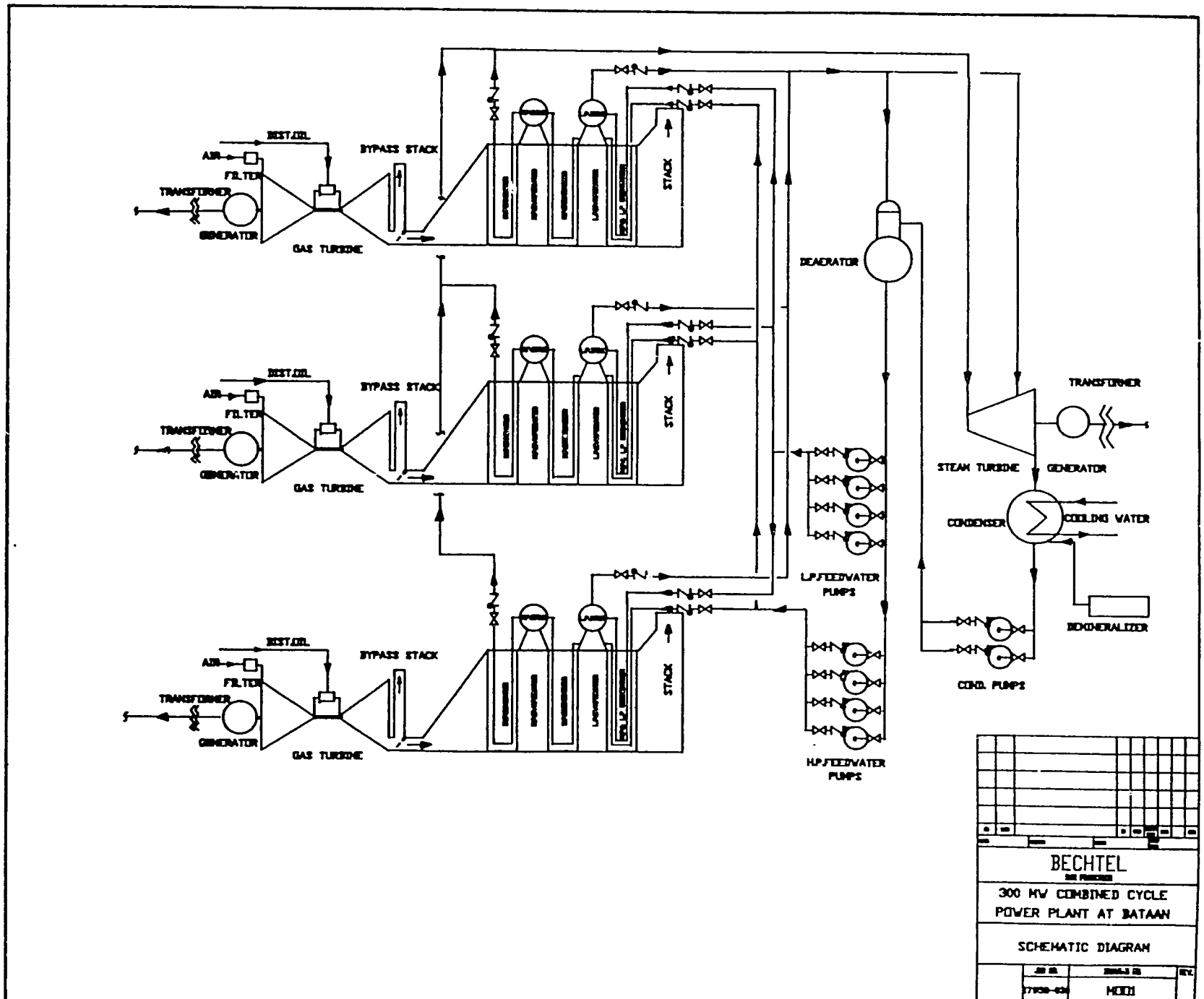

DRAWING 2.1.1-2

The plant will include a single, dual steam admission, condensing type, steam turbine generator set complete with auxiliaries including condenser, condensate pumps and control systems. The high pressure throttle steam conditions are assumed to be 1450 psia, 950F, 744,000 lbs/hr and the L.P. steam conditions to be 100 psia, 328F, 137,160 lbs/hr. The turbine generator rating will be 115 MW. Sea water will be used for condenser cooling. A pipeline will carry sea water to the suction side of the circulating water pumps which will discharge into the condenser. Water discharged from the condenser will be carried back to the sea by pipelines. Plant makeup water will be provided by well water pumps. A demineralizer plant will be required. Storage tanks for raw water and condensate will be required. Plant waste water will be treated as required before disposal.

A fuel oil storage and handling system will be provided at the site. Oil delivery is assumed to be by trucks although oil delivery by pipeline from the nearby refinery may be feasible. Two tanks, each with a capacity of 1,500,000 gallons will be required to provide a week's oil consumption at 100% output level. The refinery supplying oil to the plant may wish to take process steam from the plant. This is not considered in this study.

The electrical power generated by three gas and one steam turbine generator sets will be stepped up to 230 kV through each unit transformer and transmitted to the Harmosa sub-station via new 230 kV sub-station and transmission lines. The new sub-station will have a breaker and one-half type arrangement as shown on the single line diagram Drawing 2.1.1-3 (No. E001).

The auxiliary power required for the turbine generator sets will be obtained from two of the four units at 13.8 kV and stepped down to 4160 and 480 V to feed the auxiliary loads as shown on the single line diagram Drawing 2.1.1-3 (No. E001). The 480 V loads for each turbine generator set will be fed to form a dedicated 13800-480 V transformer, 480 V switchgear and MCC. The 13800-480 V transformers and 480 V switchgear will be rated to supply 480 V auxiliary loads of at least two turbine generator sets. The 4160 V load will be fed from a set of

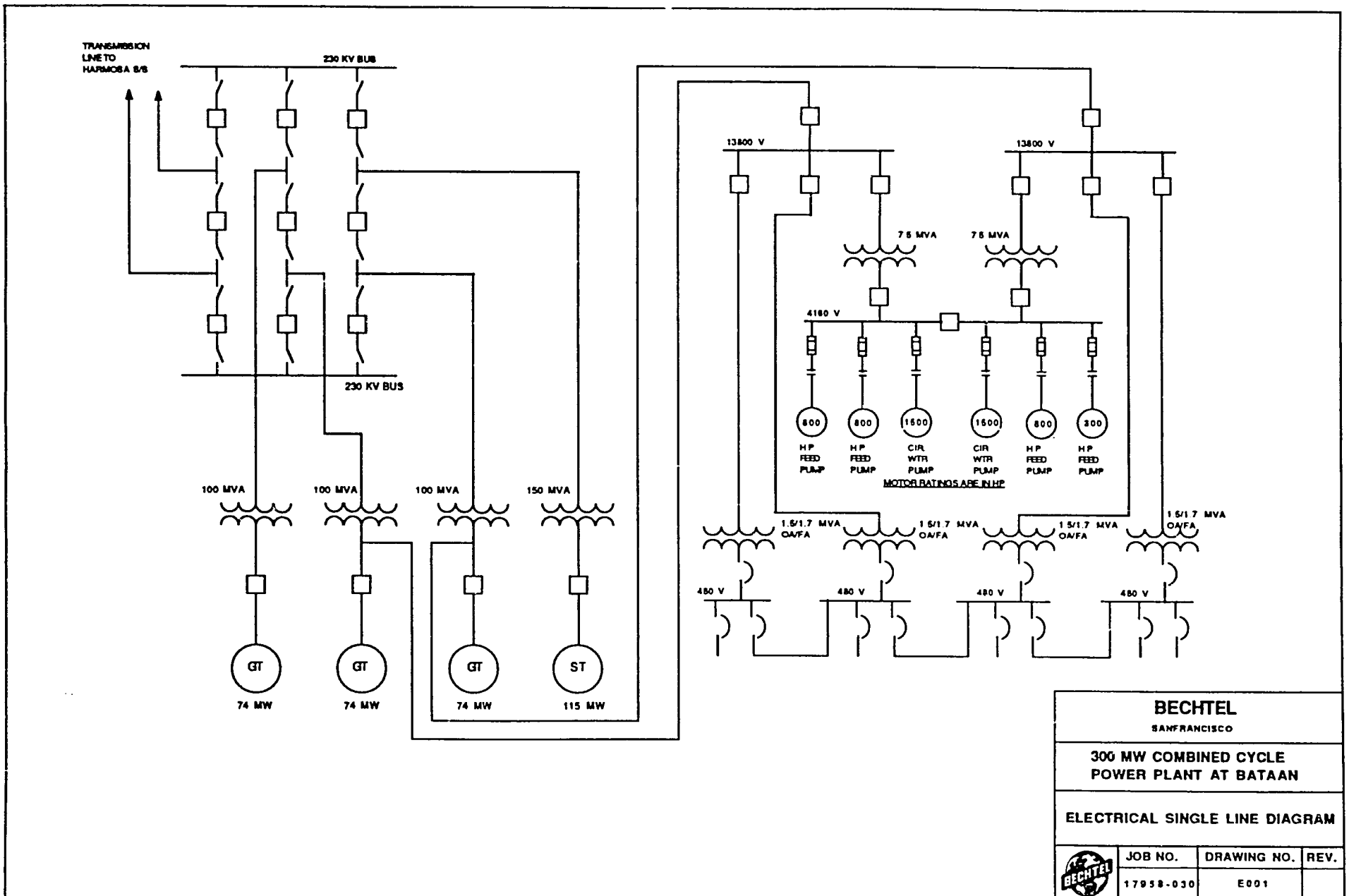

DRAWING 2.1.1-3

13800-4160 V transformers, 4160 V switchgear and motor starters as shown on the single line diagram Drawing 2.1.1-3 (No. E001). The 13800-4160 V transformers will be rated such that any one of the two transformers can feed the motors on the 4160 V bus. Electrical equipment will be suitable for outdoor installation. Switchgear and MCC will have NEMA-3R, walk-in type enclosures.

As advised by NPC, the study excludes consideration of transmission line requirements from the plant as NPC plans to consider them separately.

A list of major equipment required for the plant is included as Appendix B.

2.1.2 Expected Plant Performance

Several heat balances were developed to determine the plant performance, based on using distillate oil, in various operating modes. Heat Balance Drawing 2.1.2-1 (No. HB1) shows plant performances at 100% output in simple cycle operating mode at design ambient conditions. Heat Balance Drawing 2.1.2-2 (No. HB2) shows these performances at annual average ambient conditions. Heat Balance Drawing 2.1.2-3 (No. HB3) shows plant performances at 100% output in combined cycle mode at design ambient conditions. Heat Balance Drawing 2.1.2-4 (No. HB4) shows these performances at annual average ambient conditions.

Table 2.1.1 summarizes the plant performances at design and annual average ambient conditions based on using distillate oil. It is estimated that the net plant output will decrease by 6% and the heat rate will increase by 2% if treated Bunker C oil is used instead of light distillate oil. Table 2.1.2 shows annual electricity generation and fuel consumption for the combined cycle plant, with light distillate oil and treated Bunker C oil firing.

2.1.3 Consideration of Gas Turbine Size

As discussed in the foregoing, the study is based on using three GE 7111EA gas turbines for the combined cycle plant. These gas turbines are very reliable and

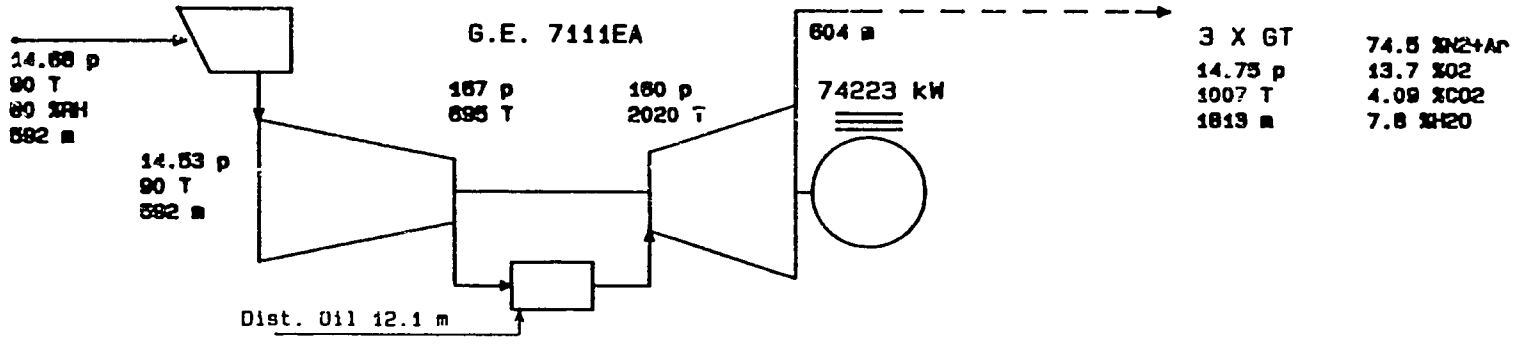

GTPRO Bechtel Corp SFRO - (NK) 07-19-1990 11: 11: 12 HB1

DRAWING 2.1.2-1

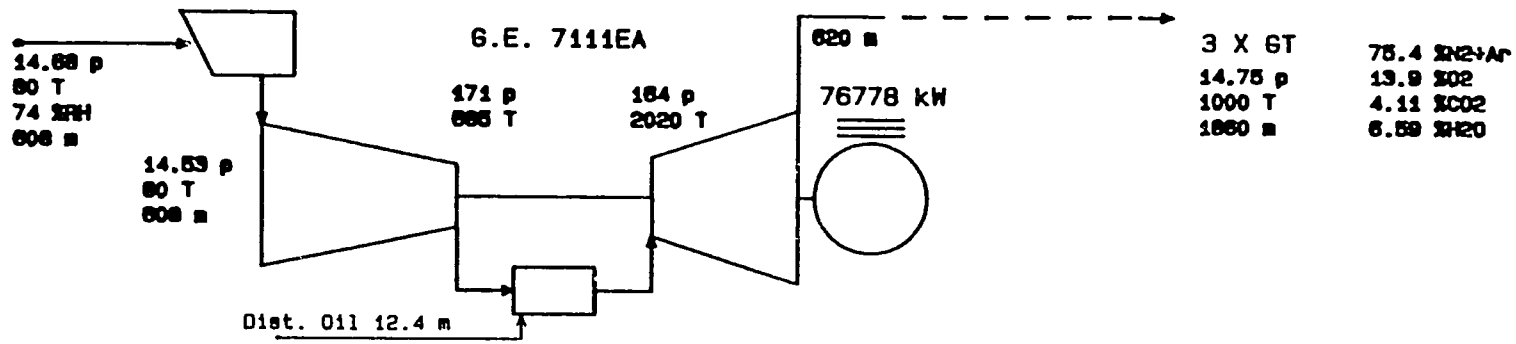

GTPRO Bechtel Corp SFRO - (NK) 07-19-1990 11: 16: 37 HB2

DRAWING 2.1.2-2

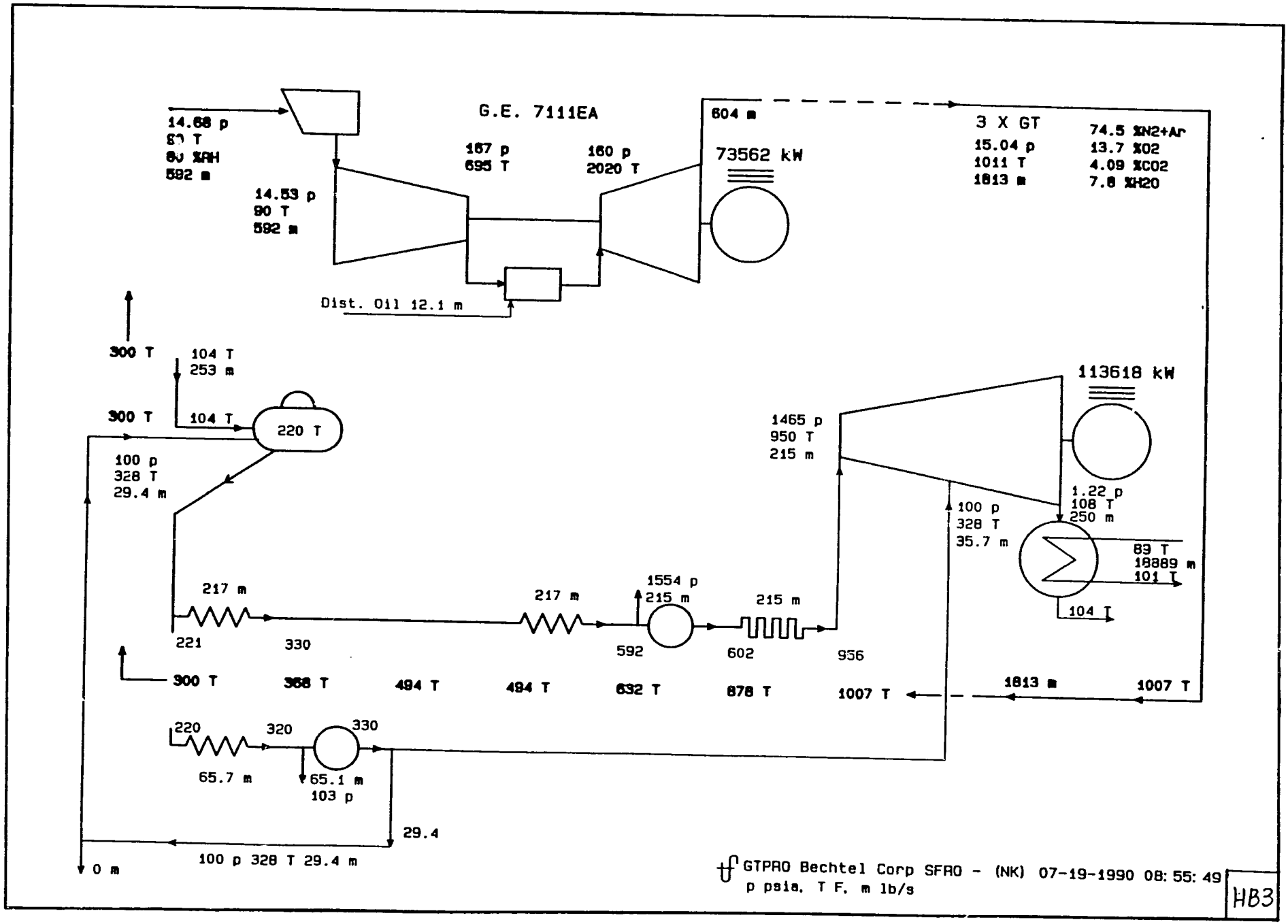

DRAWING 2.1.2-3

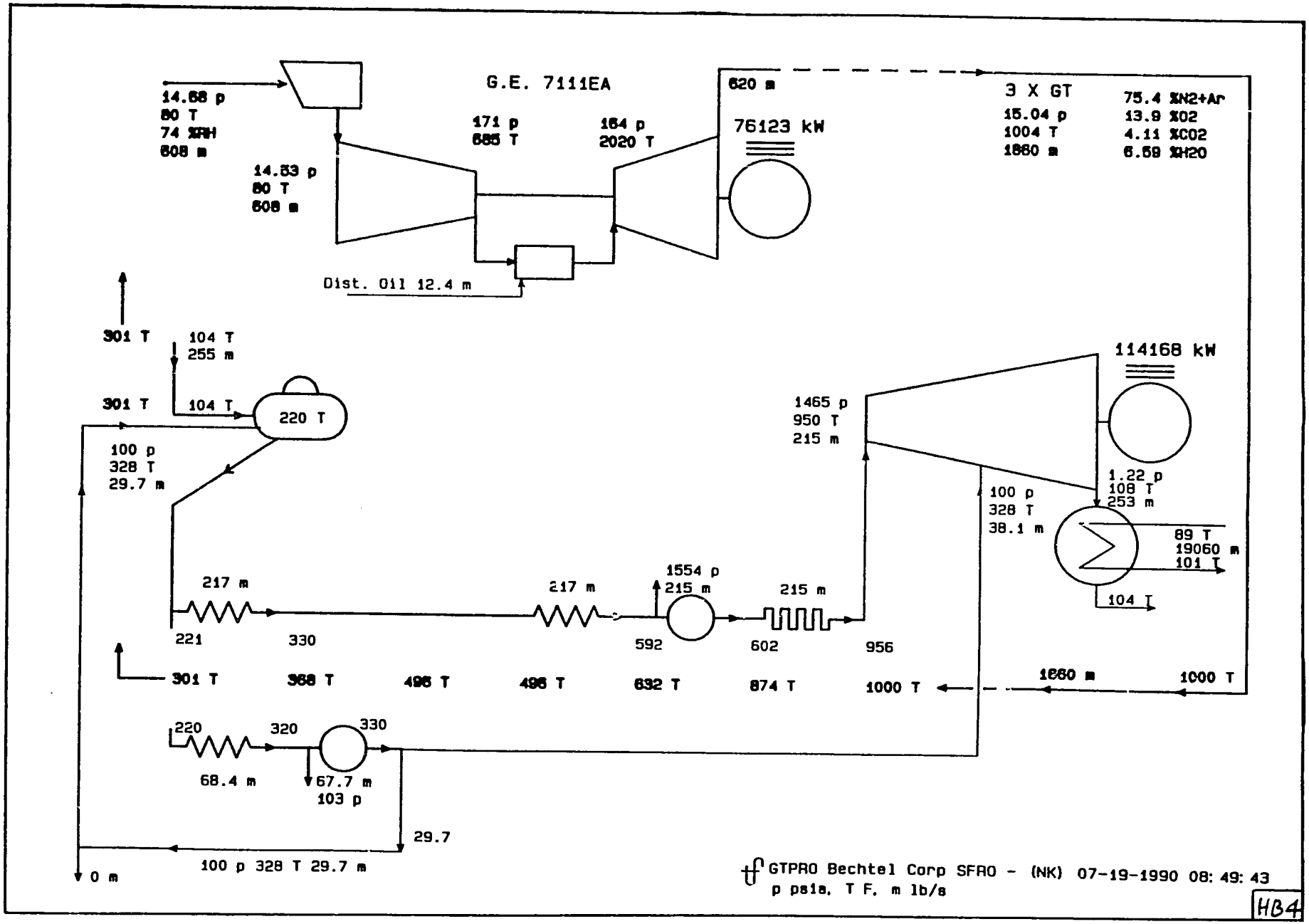

DRAWING 2.1.2-4

TABLE 2.1.1

ESTIMATED PLANT PERFORMANCE
NEW COMBINED CYCLE POWER PLANT AT BATAAN

(BASED ON DISTILLATE OIL)

Ambient Conditions	Design		Annual Average	
Power Plant Cycle	**GTs in Simple Cycle**	**GTs in Comb. Cycle**	**GTs in Simple Cycle**	**GTs in Comb. Cycle**
1. Gas Turbine Type	GE 711EA	GE 711EA	GE 711EA	GE 711EA
2. Number of Gas Turbines	3	3	3	3
3. Power Output from GTs (Gross), MW	222.7	220.7	230.4	228.4
4. Power Output from ST (Gross), MW	-----	113.6	-----	114.2
5. Total Power Output (Gross), MW	222.7	334.3	230.4	342.6
6. Estimated Auxiliary Power Consumption, MW	2.2	6.7	2.3	6.9
7. Net Increase in Power Output, MW	220.5	327.6	228.1	335.7
8. Total Heat Input to GTs, kW(TH)/hr (LHV)	695,954	695,954	713,853	713,853
9. Net Heat Rate (LHV),				
Btu/kWhr	10,772	7251	10,681	7256
Kg.Cal/kWhr	2715	1827.1	2692	1828.5
10. Cycle Efficiency (LHV), %	31.7	47.1	32	47.0

TABLE 2.1.2

ELECTRICITY GENERATION AND FUEL CONSUMPTION NEW COMBINED CYCLE POWER PLANT AT BATAAN

Fuel Fired	Light Distillate Oil	Treated Bunker C Oil
1. Plant Capacity Factor (assumed)	75%	75%
2. Net Increase in Output, MW (at annual average ambient conditions)	335.7	315.6
3. Annual Electricity Generation, kWhrs x 10^6	2,205.6	2,073.3
4. Net Heat Rate, (LHV)		
Btu/kWhr	7256	7401
Kg.Cal/kWhr	1828.5	1865
5. Annual Heat Input,		
Btu (LHV) x 10^9	16,003.5	15,346.2
Btu (HHV) x 10^9	17,043.7	16,341.5
Kg.Cal (HHV) x 10^9	4,295.0	4,118.1
6. Economic Plant Life, Years		
- Combined cycle mode	25	25
- Simple cycle mode	0	0

have good operating history. A preliminary heat balance prepared for the combined cycle plant with Westinghouse W501.D5 type gas turbines, each rated at 106.8 MW at ISO conditions, showed plant output significantly lower than 300 MW at the site ambient conditions and therefore eliminated from further consideration. Similar larger size units manufactured by others appear to be less reliable and therefore not considered in the study. Gas turbines with ISO ratings of about 150 MW such as GE Frame 7F are not considered for this project because of their long delivery times and insufficient operating history.

2.2 CONVERSION OF EXISTING GAS TURBINES AT BATAAN FROM SIMPLE CYCLE TO COMBINED CYCLE

2.2.1 Plant Description

The existing power plant at Bataan consists of two oil-fired steam power units and four gas turbine generators. Units 1 and 2 were commissioned in 1972 and 1977 respectively and use residual oil as fuel. Units 1 and 2 are reheat units with 75 MW and 150 MW capacities. The four gas turbines generators are light distillate oil fired, Alsthom Frame 6 units which were installed recently. Each gas turbine generator has a nominal rating of 32 MW.

Additional land will be needed for conversion to combined cycle. Existing land area will be insufficient to locate four new heat recovery steam generators (HRSGs), a new steam turbine generator and its auxiliaries and larger size distillate oil storage tanks required for storing oil for a week's consumption. The proposed location of this new equipment is shown in Drawing 2.2.1-1 (No. PA002).

The ambient design conditions and other design parameters for the plant are listed in Appendix B.

The power plant schematic diagram is shown on Drawing 2.2.1-2 (No. M002). The plant will consist of existing four Alsthom gas turbine generators Model PG6531 (Frame 6) using light distillate oil as fuel. Modifications to the gas turbines will be

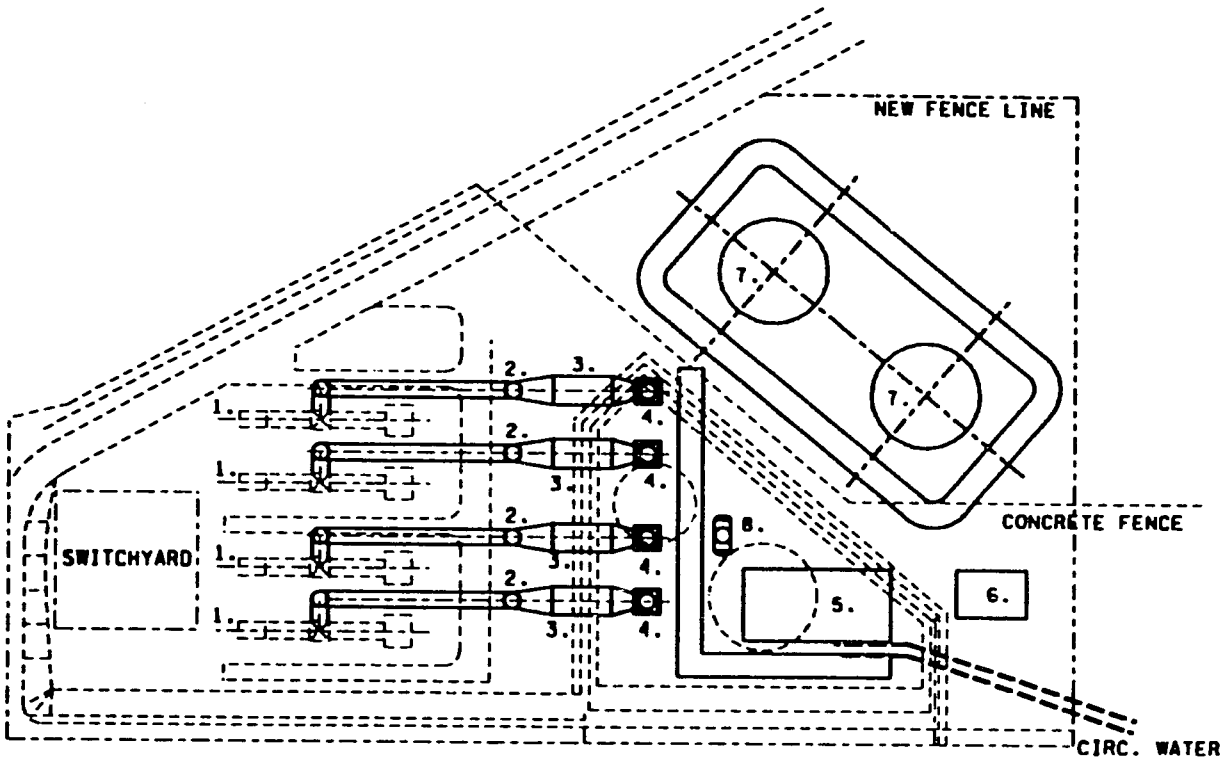

1. GAS TURBINE
2. BYPASS STACK
3. HRSG
4. STACK
5. STEAM TURBINE
6. TRANSFORMER
7. FUEL TANKS
8. DEAERATOR

BECHTEL
SAN FRANCISCO

CONVERSION OF EXISTING GTS AT BATAAN TO COMB. CYCLE

PLOT PLAN

JOB NO.	DRAWING NO.	REV.
17598-030	PA-002	A

DRAWING 2.2.1-1

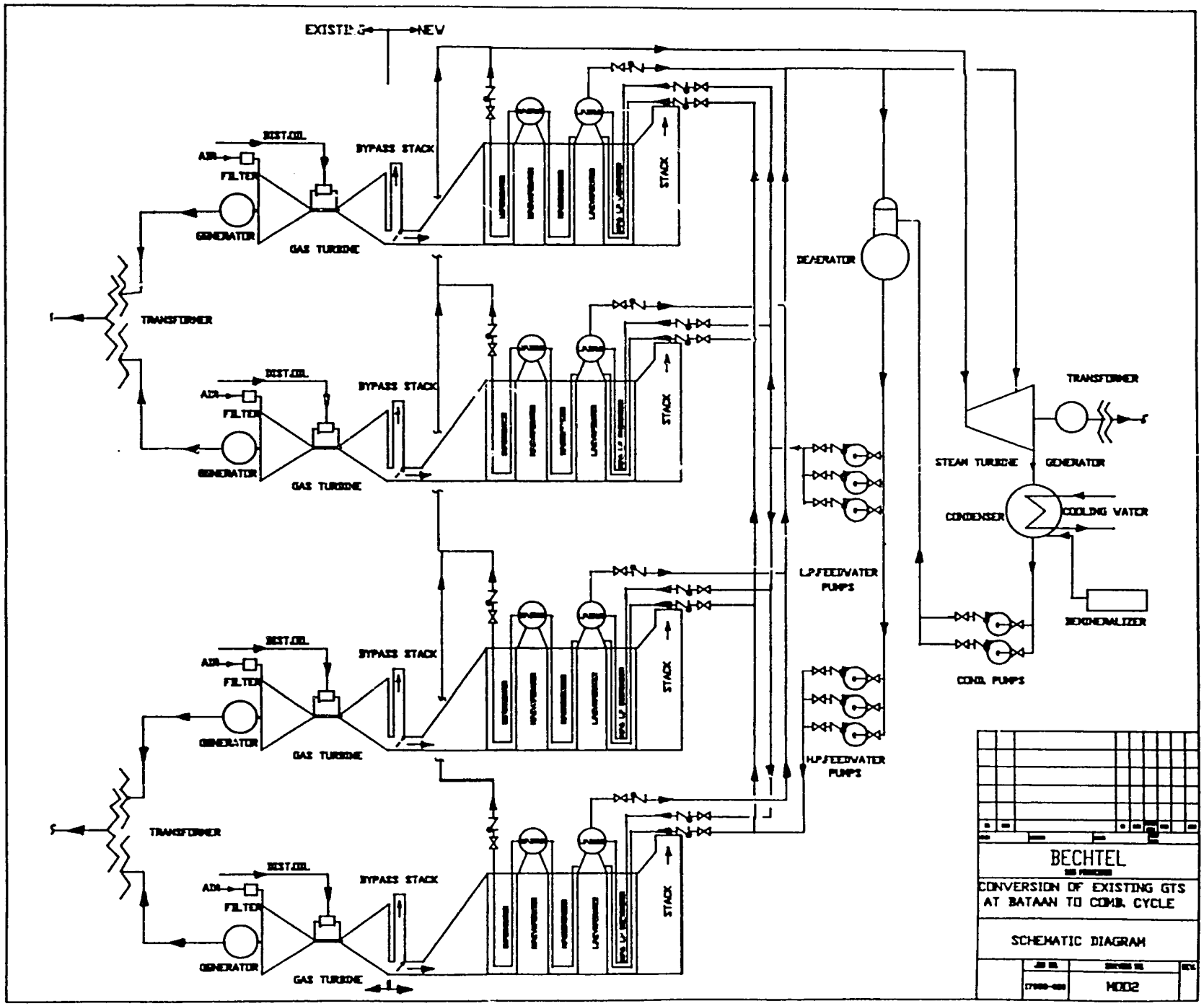

DRAWING 2.2.1-2

required to use treated Bunker C oil. Steam or water injection to control NOx emissions may be required based on the ambient air quality conditions. However, these requirements are not considered in the study. Sulfur dioxide emissions will be controlled by limiting the sulfur content of the fuel. Each GT will have a rating of about 32 MW at the site design ambient conditions in the combined cycle mode based on distillate oil firing.

Each GT will exhaust into a separate unfired heat recovery steam generator (HRSG) to produce steam at two pressure levels. A gas bypass stack will be provided to facilitate GT operation in simple cycle mode. The economizer of each HRSG will receive feedwater at 220F from a common deaerator through a set of feedwater pumps. A minimum stack gas temperature of 300F will be maintained to minimize back end corrosion.

The plant will include a single, dual steam admission, condensing type, steam turbine generator set complete with auxiliaries including condenser, condensate pumps and control systems. The high pressure throttle steam conditions are assumed to be 1450 psia, 950F, 468,000 lbs/hr and the L.P. steam conditions to be 100 psia, 328F, 85,680 lbs/hr. The turbine generator rating will be 70 MW.

Sea water will be used for condenser cooling. The existing power plant has sea water intake pipelines. It is assumed that these pipelines have adequate capacity to serve the new steam turbine generator. New circulating water pumps will be provided at the existing intake well for the new turbine generator. Water discharged from the condenser will be carried back to the sea by the existing systems. Plant makeup water will be provided by well water pumps. A demineralizer plant will be required. Storage tanks for raw water and condensate will be required. Plant waste water will be treated as required before disposal.

A fuel oil storage and handling system will be provided at the site. Oil delivery is assumed to be by the existing pipe lines. Two tanks, each with a capacity of 1,000,000 gallons will be required to provide a week's oil consumption at 100% output level.

The electrical power generated by the steam turbine generator set will be stepped up to 230 kV through unit transformer and connected to existing 230 kV sub-station by adding a new circuit breaker as shown on the single line diagram Drawing 2.2.1-3 (No. E002).

The auxiliary power required for the turbine generator set will be obtained at 13.8 kV and stepped down to 4160 and 480 V to feed the auxiliary loads as shown on the single line diagram Drawing 2.2.1-3 (No. E002). The 480 V loads for turbine generator set will be fed to form a dedicated 4160-480 V transformer, 480 V switchgear and MCC. The 4160 V load will be fed from a set of 13800-4160 V transformers, 4160 V switchgear and motor starters as shown on the single line diagram drawing No. E002. A circuit breaker will be provided at 4160 V and 480 V switchgear to receive an alternate supply from existing switchgear to provide power to new turbine generator set. Electrical equipment will be suitable for outdoor installation. Switchgear and MCC will have NEMA-3R, walk-in type enclosures.

As advised by NPC, the study excludes consideration of transmission line requirements from the plant as NPC plans to consider them separately.

A list of major equipment required for the plant is included as Appendix C.

2.2.2 Expected Plant Performance

The plant performances with gas turbines type PG6531 were estimated based on the heat balances developed for the gas turbine model GE6541B as the technical information available for gas turbine PG6531 was inadequate to run a heat balance.

Table 2.2.1 summarizes plant performance at design and annual average ambient conditions based on using light distillate oil. It is estimated that the net plant output will decrease by 6% and heat rate will increase by 2% if treated Bunker C oil is used instead of light distillate oil. Table 2.2.2 shows annual electricity generation

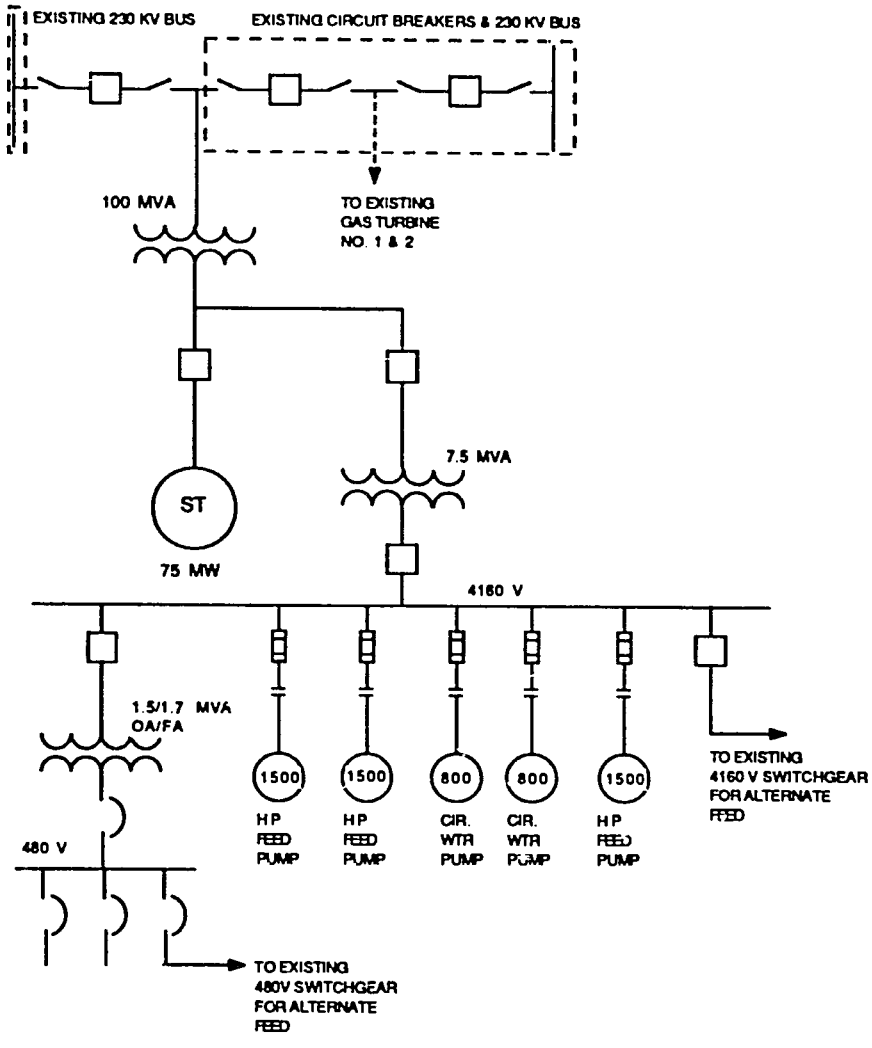

BECHTEL
SANFRANCISCO

CONVERSION OF EXISTING GTS AT BATAAN TO COMB. CYCLE

ELECTRICAL SINGLE LINE DIAGRAM

JOB NO.	DRAWING NO.	REV.
17958-030	E002	

DRAWING 2.2.1-3

TABLE 2.2.1

ESTIMATED PLANT PERFORMANCE
EXISTING GT CONVERSION AT BATAAN

(BASED ON DISTILLATE OIL)

Ambient Conditions	Design		Annual Average	
Power Plant Cycle	**GTs in Simple Cycle**	**GTs in Comb. Cycle**	**GTs in Simple Cycle**	**GTs in Comb. Cycle**
1. Gas Turbine Type	Alsthom PG6531	Alsthom PG6531	Alsthom PG6531	Alsthom PG6531
2. Number of Gas Turbines	4	4	4	4
3. Power Output from GTs (Gross), MW	128.3	127.3	134.3	133.2
4. Power Output from ST (Gross), MW	-----	69.5	-----	69.6
5. Total Power Output (Gross), MW	128.3	196.8	134.3	202.8
6. Estimated Auxiliary Power Consumption, MW	1.3	3.9	1.3	4.1
7. Net Increase in Power Output, MW	127.0	192.9	133.0	198.7
8. Total Heat Input to GTs, kW(TH)/hr (LHV)	425,416	425,417	438,252	438,129
9. Net Heat Rate (LHV),				
Btu/kWhr	11,430	7526	11,246	7526
Kg.Cal/kWhr	2880	1897	2834	1897
10. Cycle Efficiency (LHV), %	29.9	45.3	30.3	45.4

TABLE 2.2.2

ELECTRICITY GENERATION AND FUEL CONSUMPTION

EXISTING GT CONVERSION AT BATAAN

Fuel Fired	Light Distillate Oil			Treated Bunker C Oil		
	Combined Cycle (1)	Simple Cycle (2)	Difference (1) - (2)	Combined Cycle (3)	Simple Cycle (4)	Difference (3) - (4)
1. Plant Capacity Factor (assumed)	75%	25%	-----	75%	25%	-----
2. Net Increase in Output, MW (at annual average ambient conditions)	198.7	133.0	65.7	186.8	125	61.8
3. Annual Electricity Generation, kWhrs x 10^6	1,305.5	291.3	1014.2	1,227.3	273.8	953.5
4. Net Heat Rate, (LHV) Btu/kWhr (KgCal/kWhr)	7526 (1896.6)	11,246 (2834)	3720 (937.4)	7677 (1934.6)	11,470 (2890.4)	3793 (955.8)
5. Annual Heat Input, Btu (LHV) x 10^9	9,824.9	3,275.6	6,549.3	9,421.8	3,140.6	6,281.2
Btu (HHV) x 10^9	10.463.5	3,488.5	6,975.0	10,032.4	3,344.8	6,687.6
Kg.Cal (HHV) x 10^9	2636.8	879.1	1757.7	2528.2	842.9	1685.3
6. Economic Plant Life, Years						
- Combined cycle	24	24	-----	24	24	-----
- Simple cycle	0	0	-----	0	0	-----

and fuel consumption for the combined cycle plant using light distillate oil and treated Bunker C oil.

2.3 REPOWERING MALAYA UNIT 2 WITH GAS TURBINE

2.3.1 Plant Description

The existing power plant at Malaya consists of two oil-fired steam turbine generating units and three gas turbine generators. Units 1 and 2 were commissioned in 1975 and 1979, respectively, and use a mixture of residual and bunker C oil as fuel. Units 1 and 2 are reheat units which are rated at 300 MW and 350 MW respectively. The three gas turbine generators are light distillate oil fired, Hitachi Frame 6, units which were installed recently. Each gas turbine generator has a nominal rating of 30 MW.

There is no space for repowering Unit 1. Unit 2 is considered for feedwater heating type of repowering. It has a drum type, natural circulation, oil fired boiler which was manufactured by Babcock and Wilcox. The steam conditions at the superheater outlet are 2486 psig and 1005F at maximum continuous rating of the boiler.

The steam turbine generator is manufactured by Hitachi,Ltd and consists of a tandem compound high pressure, intermediate pressure and two low pressure (four flow) turbines. The feedwater system consists of three low pressure heaters, one deaerator and three high pressure heaters. Its nominal rating is 350 MW at the generator terminals. Based on the performance test conducted in 1986, the unit has a continuous capability of 364 MW gross at the generator terminals (unit operation at valves wide open without overpressure). The generator rating is 438 MVA and the main transformer rating is 442 MVA. Based on this information and discussion with the plant operators it is estimated that the generator capability is limited to about 390 MW at its terminals.

As the generator output is limited to 390 MW and the current maximum continuous capability of this unit is 364 MW, the capability increase of this unit is limited to about (390 MW - 364 MW) 26 MW through repowering, excluding the gas turbine generator output.

Malaya is a very crowded plant and very little space is available for new equipment installation. Therefore, it is considered prudent not to convert the three gas turbines installed at this plant to combined cycle configuration. The proposed location of the new equipment for repowering are shown in Drawing 2.3.1-1 (No. PA-003).

The ambient design conditions and other design parameters for the plant are listed in Appendix B.

The power plant schematic diagram is shown on Drawing 2.3.1-2 (No. M003). The plant will consist of one Asea Brown Boveri (ABB) Model GT 11N gas turbine generator, using light distillate oil or treated Bunker C oil as fuel. Steam or water injection to control NOx emissions may be required based on the ambient air quality conditions. However, these requirements are not considered in the study. Sulfur dioxide emissions will be controlled by limiting the sulfur content of the fuel. The GT will have a rating of about 70 MW at the site design ambient conditions in the repowered mode based on using light distillate oil.

The GT will exhaust into an unfired waste heat recovery economizer (WHRE). A gas bypass stack will be provided to facilitate GT operation in simple cycle mode. Feedwater from the discharge header of the existing boiler feedwater pumps will be delivered to the WHRE at about 346F. This will reduce the feedwater flow to the high pressure feedwater heaters resulting in lower extraction steam flow from the turbines to the high pressure feedwater heaters and higher steam flow to the back end of the steam turbine. Diversion of the extracting steam flow to the back end will generate additional power in the existing turbine generator. Heated feedwater from the WHRE will flow to the feedwater discharge header at the outlet of the final high pressure feedwater heater at about 525F. Because of the high inlet

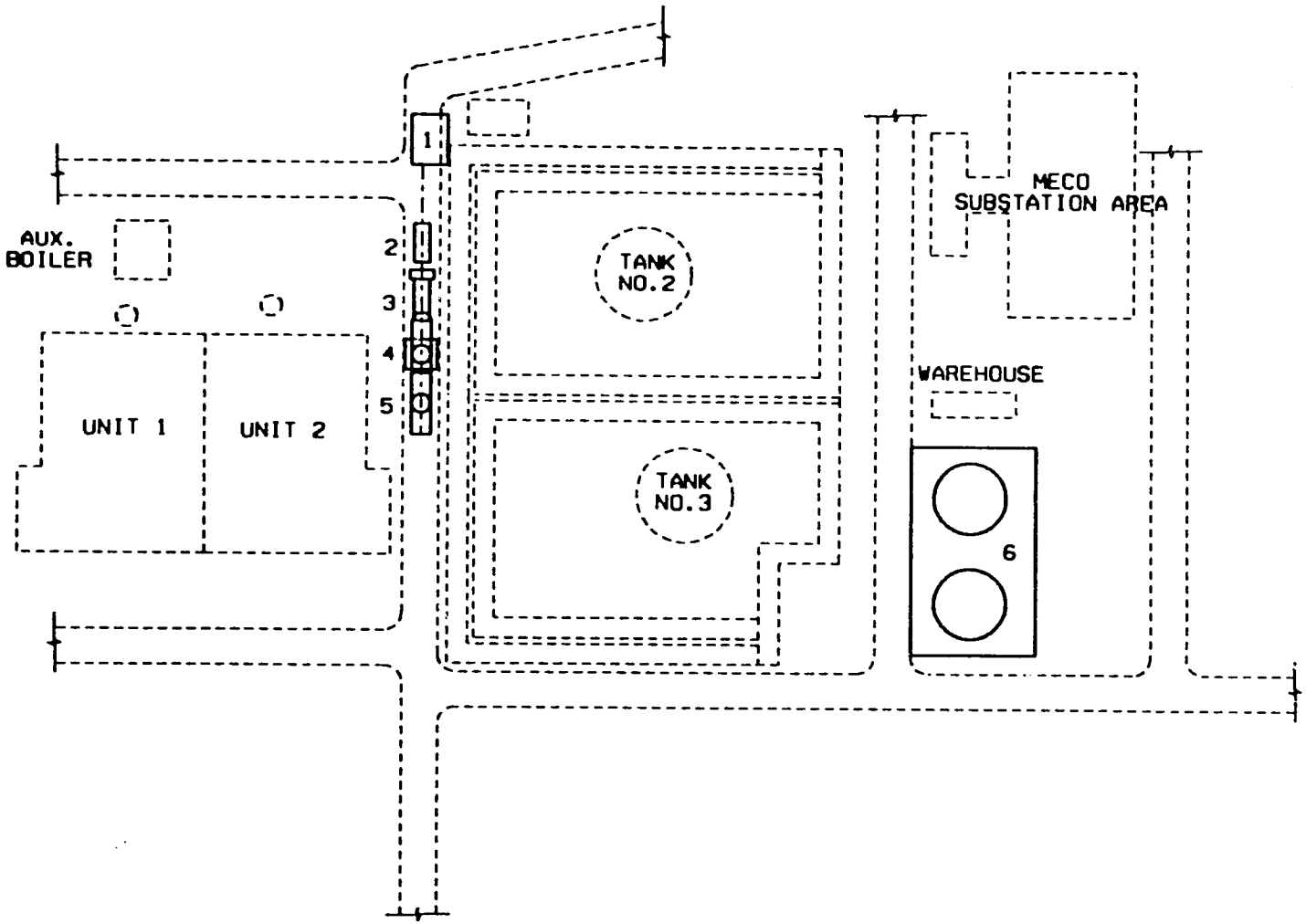

LEGEND

—— NEW

- - - - EXISTING

1. TRANSFORMER
2. GENERATOR EXCITER BLOCK
3. GAS TURBINE BLOCK
4. EXHAUST STACK
5. WASTE HEAT ECONOMIZER
6. OIL TANKS

△								
△								
△								
NO.	DATE	REVISIONS	BY	CHKD				APVD
SCALE 1"=100'	DESIGNED	DR	DRAWN	DR				

BECHTEL
SAN FRANCISCO

REPOWERING WITH GT
MALAYA UNIT 2

PLOT PLAN

JOB NO.	DRAWING NO.	REV.
17958-030	PA-003	A

DRAWING 2.3.1-1

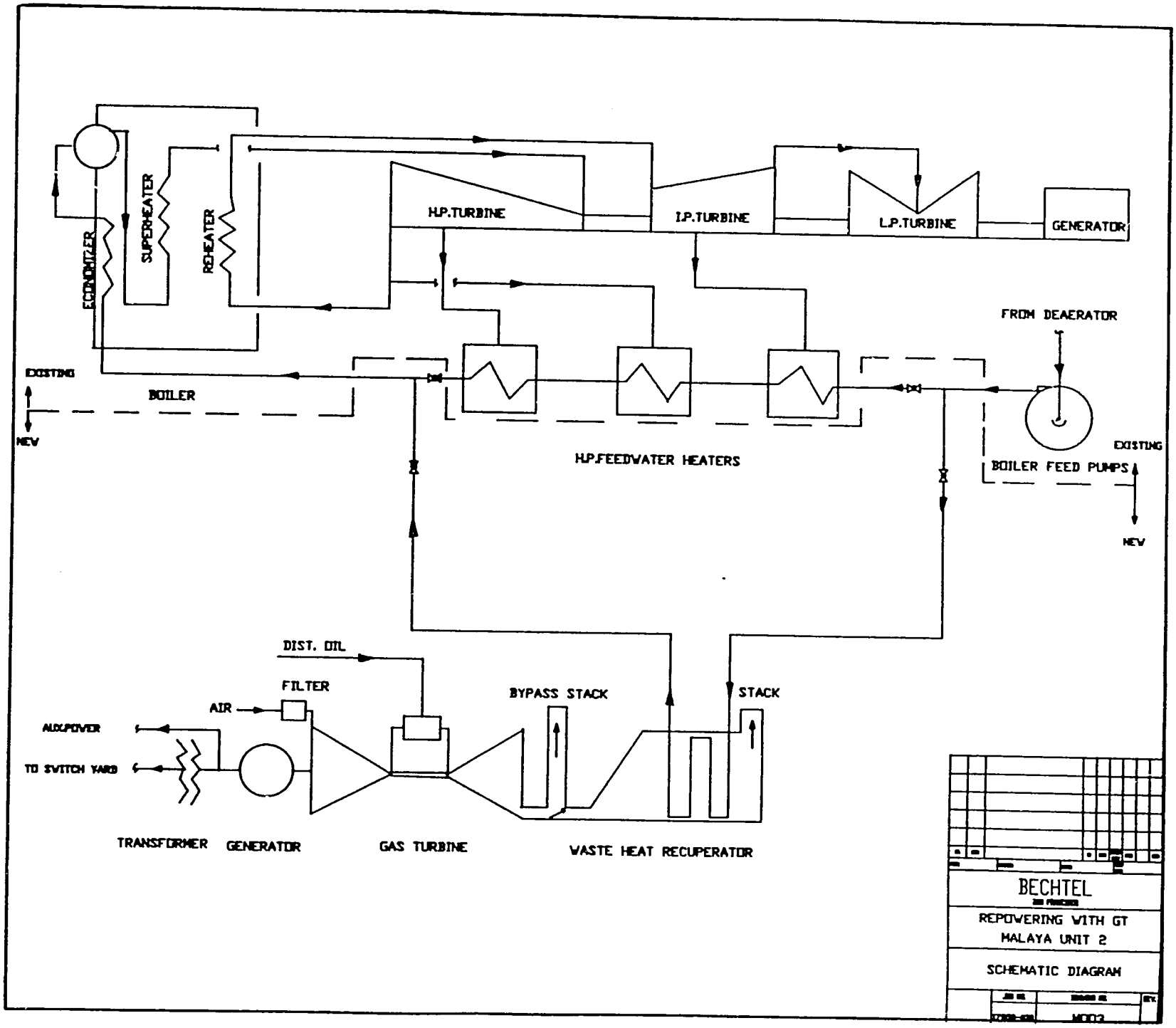

DRAWING 2.3.1-2

feedwater temperature to the WHRE, the stack gas temperature will be above 450F.

A fuel storage and handling system will be provided at the site. Oil delivery is assumed to be by barges. Two tanks, each with a capacity of 500,000 gallons will be required to provide a week's oil consumption at 100% output level.

The electrical power generated by new gas turbine generator set will be stepped up to 115 kV through unit transformer and connected to existing 115 kV sub-station by adding two new circuit breakers as shown on the single line diagram Drawing 2.3.1-3 (No. E003).

The auxiliary power required for the gas turbine generator set will be obtained at 13.8 kV and stepped down to 480 V to feed the auxiliary loads as shown on the single line diagram Drawing 2.3.1-3 (No. E003). The 480 V loads for turbine generator set will be fed to form a dedicated 13800-480 V transformer, 480 V switchgear and MCC. A circuit breaker will be provided at the 480 V switchgear to receive an alternate supply from existing switchgear to provide auxiliary power to the new gas turbine generator set. Electrical equipment will be suitable for outdoor installation. Switchgear and MCC will have NEMA-3R, walk-in type enclosures.

As advised by NPC, the study excludes consideration of transmission line requirements from the plant as NPC plans to consider them separately.

A list of major equipment required for the plant is included as Appendix D.

2.3.2 Expected Plant Performance

ABB's proposal to repower Malaya unit 2 with GT 11N gas turbine generator indicated that the existing steam turbine generator will generate an additional 40 MW at the generator terminals. ABB assumed in their proposal that at 350 MW

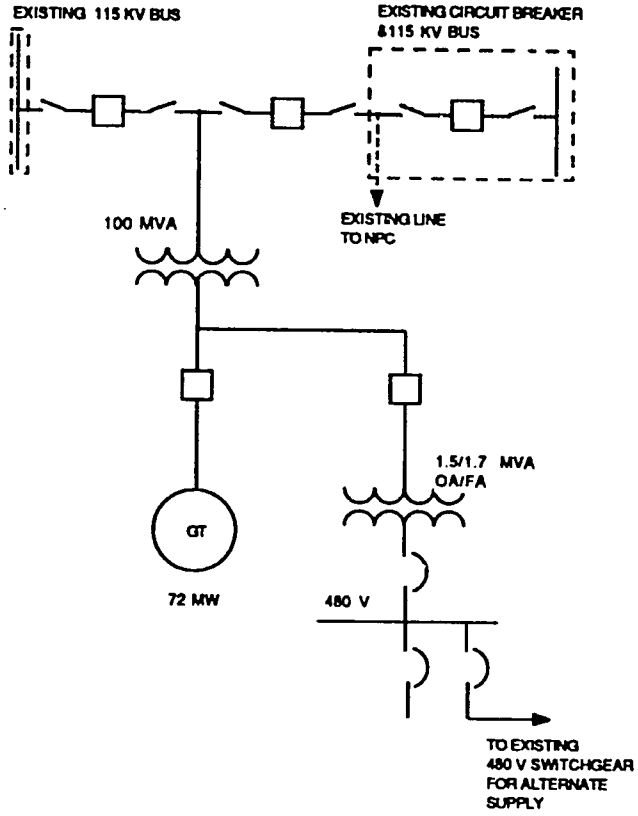

BECHTEL
SANFRANCISCO

REPOWERING WITH GT
MALAYA UNIT 2

ELECTRICAL SINGLE LINE DIAGRAM

JOB NO.	DRAWING NO.	REV.
17958-030	E003	

DRAWING 2.3.1-3

output level of the existing turbine generator, the feedwater heating type of repowering will increase this output to 390 MW.

However, Hitachi, the manufacturer of the existing steam turbine generator has subsequently identified several existing equipment limitations and modifications required for repowering in their Technical Report for Repowering of Malaya Thermal Power No. 2 350 MW Steam Turbine dated June 1990. This report suggests two separate cases for repowering. The two repowering cases (see exhibit A) considered for Malaya Unit 2 are briefly discussed below:

Case 1. It is assumed that the repowering will be based on using one ABB GT11N gas turbine generator, one waste heat recovery economizer and maintaining the existing main steam flow to the steam turbine generator without change. This arrangement will increase the existing steam turbine generator output from 350 MW to 384 MW, as predicted by Hitachi. This will increase the steam turbine output by 34 MW instead of the 40 MW originally proposed by ABB.

As discussed previously, the existing steam turbine generator has a continuous capability of 364 MW. Therefore, the repowering will increase the existing steam turbine generator continuous capability only by 20 MW (384 MW - 364 MW). Additional heat, equivalent to 14 MW (34 MW - 20 MW), available to the existing unit, through repowering, will be considered as reduction in the fuel supply to the boiler at 384 MW operating level.

As can be seen from exhibit A, this case will require significant modifications to the existing boiler and turbine which will include:

- Replacement of reheaters with headers due to increase in the operating pressure

- Replacement of cold and hot reheat piping and safety valves due to increase in operating pressure

EXHIBIT A

SUMMARY OF MALAYA UNIT NO. 2 REPOWERING

	Existing Plant	REPOWERING		Original VWO
		No Change in MSF	With Modification	
MSF(lb/h)	2,578,107	2,578,107	2,348,400	2,636,055
Output MW	350 (Base)	384 (+34)	359 (+9)	375 (+25)
RSF(lb/h)	2,140,578	2,410,000	2,238,382	2,176,653
RP(psia)	546	614	575	550
		Reheater Replace	Reheater Modification	
		Cold Reheat Pipe Replace		
		Hot Reheat Pipe Replace		
		Safety Valve Replace	Safety Valve Capacity Up	
		Steam Path Replace	Steam Path Partial Replace	

M S F : Main Steam Flow
R S F : Reheat Steam Flow
R P : Reheat Pressure
V W O : Valve Wide Open

- Replacement of some parts of the steam turbine steam paths

For Case 1, Heat Balance Drawing 2.3.2-1 (No. HB5) shows GT performances at 100% output in simple cycle operating mode at design ambient conditions. Heat Balance Drawing 2.3.2-2 (No. HB6) shows these performances at annual average ambient conditions. Heat Balance Drawing 2.3.2-3 (No. HB7) shows GT performances at 100% output in repowered mode at design ambient conditions. Heat Balance Drawing 2.3.2-4 (No. HB8) shows these performances at annual average ambient conditions. These heat balances are based on light distillate oil firing.

Case 2. It is assumed that the repowering will be based on using one Hitachi F7EA gas turbine generator, one waste heat recovery economizer and reducing the main steam flow to the steam turbine generator with steam path modifications for improving the turbine efficiency. This arrangement will increase the existing steam turbine generator output from 350 MW to 359 MW. This will be an increase of only 9 MW compared to ABB's original proposal of 40 MW.

As the existing steam turbine generator has a continuous capability of 364 MW, virtually there will be no increase in the continuous capability of the existing turbine generator. Heat equivalent to 9 MW (359 MW - 350 MW) which will be available to the existing unit, through repowering, will be considered as reduction in the fuel supply to the boiler at 359 MW operating level.

Exhibit A shows the modifications required to the boiler and turbine for case 2 repowering. These are:

- Modify existing reheater to accommodate additional flow by about 13%
- Add additional safety valves on reheater system
- Replace steam turbine steam path for efficiency improvement

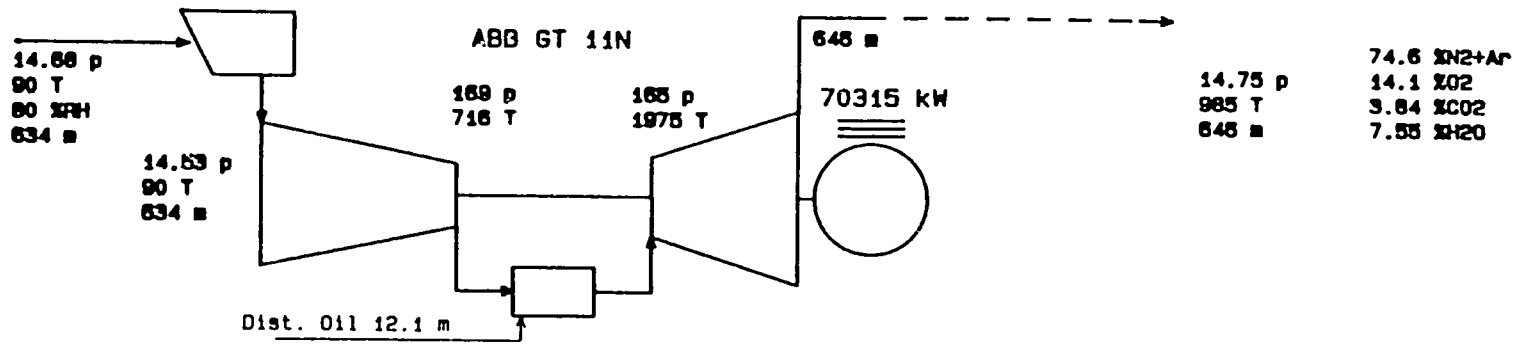

GTPRO Bechtel Corp SFRO - (NK) 07-19-1990 10: 17: 18 HB5

DRAWING 2.3.2-1

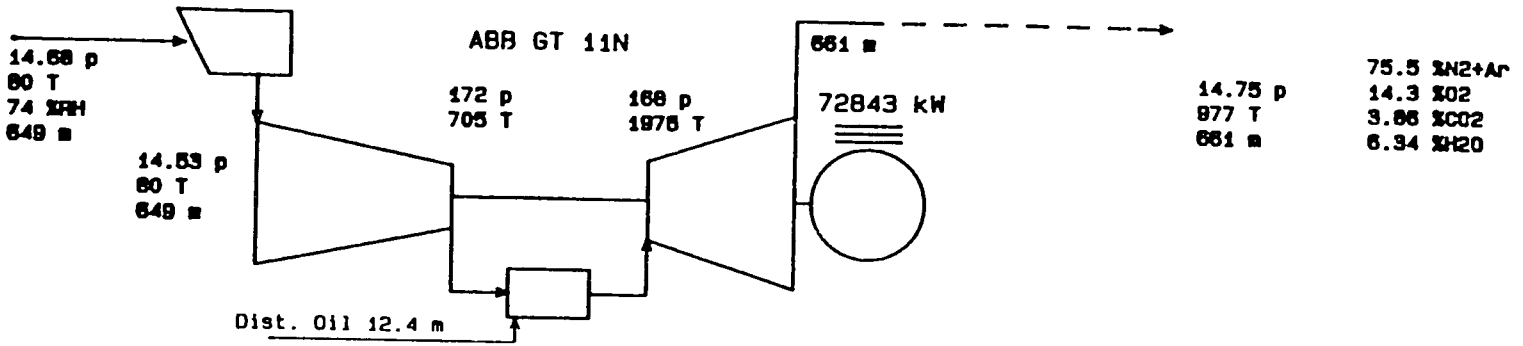

GTPRO Bechtel Corp SFRO - (NK) 07-19-1990 10:21:05

HB6

DRAWING 2.3.2-2

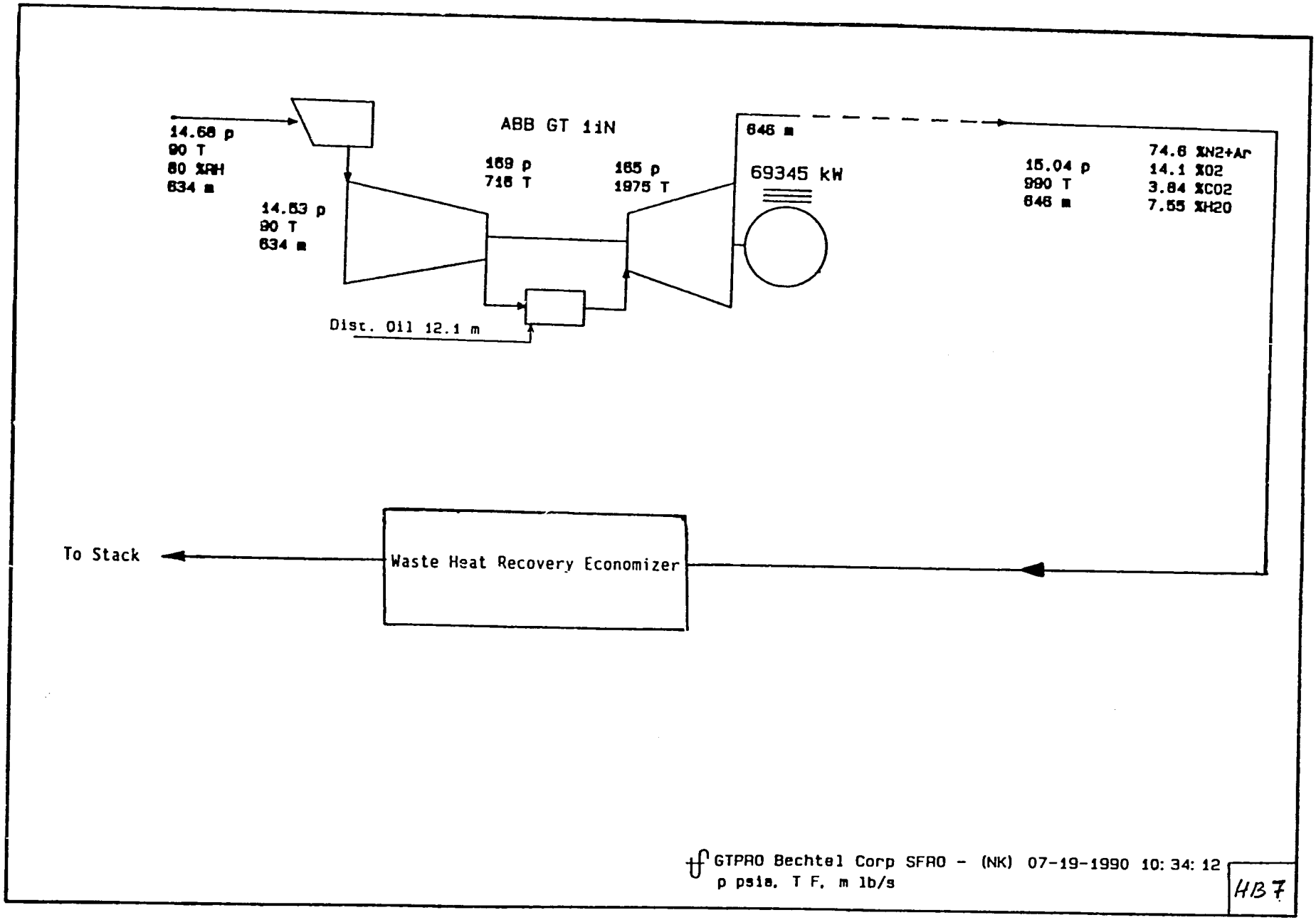

DRAWING 2.3.2-3

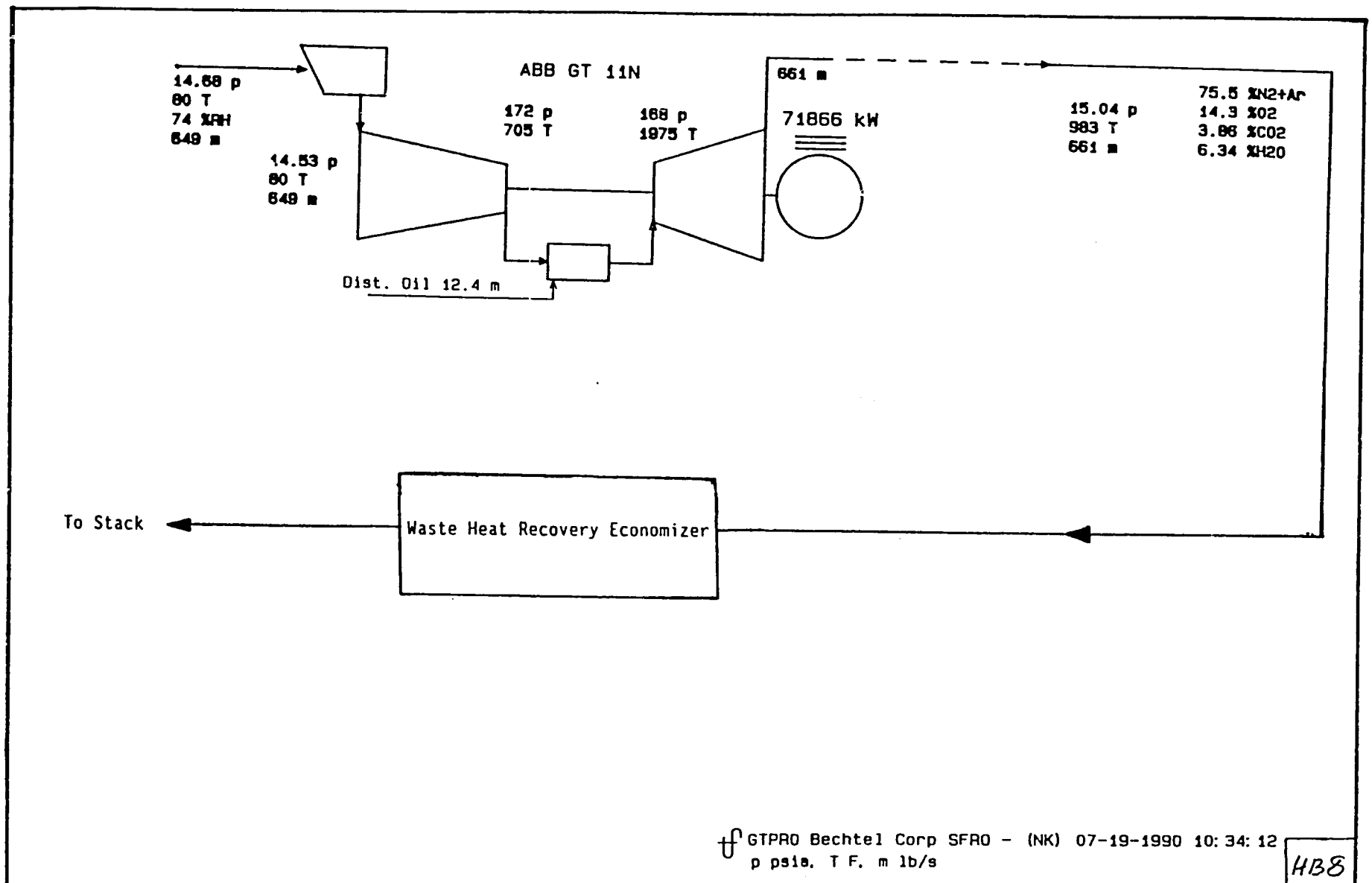

DRAWING 2.3.2-4

Exhibit B shows the heat balance prepared by Hitachi for case 2.

Table 2.3.1 summarizes the plant performances at design and annual average ambient conditions using light distillate oil for gas turbine. Table 2.3.2 shows annual incremental electricity generation and fuel consumption for cases 1 and 2 with distillate oil and Bunker C oil firing. It is estimated that the output decreases by 6% and heat rate increases by 2% if treated Bunker C oil is used instead of distillate oil.

2.4 REPOWERING SUCAT UNIT 4 WITH GAS TURBINES

2.4.1 Plant Description

The existing power plant at Sucat consists of four, oil fired, steam turbine generating units. Units 1 and 2 were commissioned in 1968 and 1970 respectively and use bunker C oil as fuel. Unit 1 is a reheat unit with 150 MW rated capacity. Unit 2 is a reheat unit with 200 MW rated capacity. Units 3 and 4 were commissioned in 1971 and 1972 respectively and use bunker C oil as fuel. Unit 3 is a reheat unit rated at 200 MW Capacity and Unit 4 is a reheat unit rated at 300 MW capacity.

There is no space for repowering Units 1-3. An existing warehouse near Unit 4 will have to be demolished and site prepared before repowering Unit 4. Unit 4 is considered for feedwater heating type of repowering. It has an oil fired, Benson type once-through boiler which was manufactured by Babcock - Hitachi, Japan. The steam conditions at the superheater outlet are 2980 psig and 1005F at maximum continuous rating of the boiler.

The steam turbine generator is manufactured by Siemens, West Germany and consists of a tandem compound high pressure, intermediate pressure and low pressure turbines. The feedwater system consists of three low pressure heaters, one deaerator and two high pressure heaters. Its nominal rating is 300 MW at the generator terminal. The unit is assumed to have a continuous capability of

EXHIBIT B

AMBIENT TEMP.	:	86° F
GT OPE. MODE	:	BASE
PLANT OUTPUT	:	431,730 kW
GT OUTPUT	:	77,690 kW
ST OUTPUT	:	359,040 kW
HIGH HEAT VALUE (HHV)		
-FOR GT	:	19,480BTU/LB
-FOR BOILER	:	18,110BTU/LB
PLANT HEAT RATE	:	8941BTU/KWH
PLANT EFFICIENCY	:	38.2%

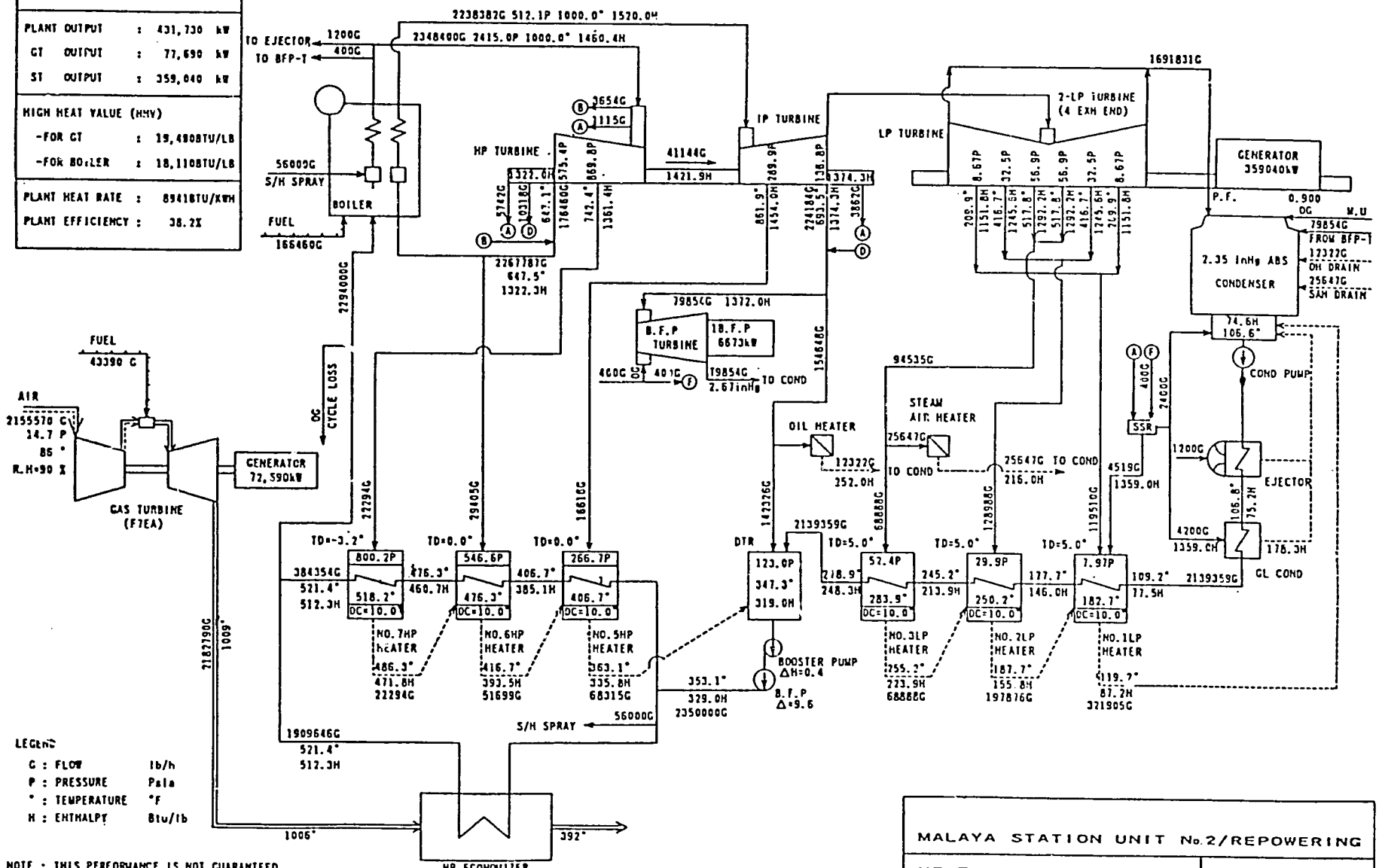

LEGEND

G : FLOW	lb/h	
P : PRESSURE	Pala	
° : TEMPERATURE	°F	
H : ENTHALPY	Btu/lb	

NOTE ; THIS PERFORMANCE IS NOT GUARANTEED.
IT SHOWS THE MODIFICATION FROM THE EXISTING PLANT
BASED ON THE PERFORMANCE OF REHABILITATION.

MALAYA STATION UNIT No.2/REPOWERING	
HEAT BALANCE DIAGRAM	FIG- 1

91-E-0149-3

TABLE 2.3.1

ESTIMATED PLANT PERFORMANCE
UNIT 2 REPOWERING AT MALAYA
(BASED ON DISTILLATE OIL)

Ambient Conditions	Design				Annual Average			
Power Plant Cycle	**GT in Simple Cycle**	**GT in Comb. Cycle**	**GT in Repowering Case 1**	**GT in Repowering Case 2**	**GT in Simple Cycle**	**GT in Comb. Cycle**	**GT in Repowering Case 1**	**GT in Repowering Case 2**
1. Gas Turbine Type	ABB GT11N	ABB GT11N	ABB GT11N	F7EA	ABB GT11N	ABB GT11N	ABB GT11N	F7EA
2. Number of Gas Turbines	1	1	1	1	1	1	1	1
3. Power Output from GTs (Gross), MW	70.3	69.4	69.4	70.5	72.9	71.9	71.9	72.7
4. Increase in Power Output from ST (Gross), MW	----	38.6	34*	9**	-----	38.6	34.0*	9.0**
5. Total Increase in Power Output (Gross), MW	70.3	108.0	89.4*	70.5**	72.9	110.5	91.9*	72.7**
6. Estimated Auxiliary Power Consumption, MW	0.7	2.2	0.9	0.7	0.7	2.2	0.9	0.7
7. Net Increase in Power Output, MW	69.6	105.8	88.5*	69.8**	72.2	108.3	91.0*	72.0**
8. Total Heat Input to GTs, kW(TH)/hr (LHV)	232,788	232,788	232,788	225,783	238,104	238,104	238,104	231,381
9. Net Heat Rate (LHV), Btu/kWhr	11,415	7509	8977*	11,039**	11,255	7504	8930*	10,968**
Kg.Cal/kWhr	2877	1822	2262	2782**	2836	1891	2250*	2763**
10. Cycle Efficiency (LHV), %	29.9	45.4	38.0*	30.9**	30.3	45.5	38.2	31.1**

*Assumed 20 MW continuous capability increase in the existing Unit 2 steam turbine generator. Ignored changes to Unit 2 boiler heat input.

**Assumed no increase in the existing Unit 2 steam turbine generator continuous capability. Ignored changes to Unit 2 boiler heat input.

TABLE 2.3.2

ELECTRICITY GENERATION AND FUEL CONSUMPTION
UNIT 2 REPOWERING AT MALAYA

Fuel Fired	Light Distillate Oil		Treated Bunker C Oil	
	Case 1	Case 2	Case 1	Case 2
1. Plant Capacity Factor (assumed)	75%	75%	75%	75%
2. Net Plant Output, MW (at annual average ambient conditions)	91.0	72.0	85.5	67.7
3. Annual Electricity Generation, kWhrs x 10^6	597.9	473.1	561.7	444.8
4. Annual Heat Input to gas turbine,				
Btu (LHV) x 10^9	5,339	5,188.3	5,119.0	4,974.5
Btu (HHV) x 10^9	5,686	5,556.1	5,451.7	5,327.2
Kg.Cal (HHV) x 10^9	1,432.9	1,400.1	1,373.8	1,342.5
5. Decrease in Annual Heat Input to Unit 2 Boiler,				
Btu (HHV) x 10^9	426.39	1,947.8	426.39	1,947.8
Kg.Cal (HHV) x 10^9	107.45	490.85	107.45	490.85
6. Economic Plant Life, Years				
- Combined cycle	24	24	24	24
- Simple cycle	1	1	1	1

315 MW gross at the generator terminals (unit operation at valves wide open without overpressure). The generator rating is 370 MVA or 333 MW at 0.9 power factor.

As the generator output is limited to 333 MW and the maximum current continuous capability of this unit is 315 MW, the capability increase of this unit is limited to about (333 MW - 315 MW) 18 MW through repowering, excluding the gas turbine generator output.

Sucat is a very crowded plant and very little space is available for new equipment installation. The proposed location of the new equipment for repowering are shown in Drawing 2.4.1-1 (No. PA004).

The ambient design conditions and other design parameters for the plant are listed in Appendix B.

The power plant schematic diagram is shown on Drawing 2.4.1-2 (No. M004). The plant will consist of two Frame 6 gas turbine generators manufactured by John Brown Engineering (JBE). The gas turbines will use light distillate oil or treated Bunker C oil as fuel. Steam or water injection to control NOx emissions may be required based on the ambient air quality conditions. However, these requirements are not considered in the study. Sulfur dioxide emissions will be controlled by limiting the sulfur content of the fuels. Each GT will have a rating of about 33 MW at the site design ambient conditions in the repowered mode.

Each GT will exhaust into an unfired waste heat recovery economizer (WHRE). A gas bypass stack will be provided to facilitate GT operation in simple cycle mode. Feedwater from the discharge header of the existing boiler feedwater pumps will be delivered to the WHRE at about 354F. This will reduce the feedwater flow to the high pressure feedwater heaters resulting in lower extraction steam flow from the turbines to the high pressure feedwater heaters and higher steam flow to the back end of the steam turbine. Diversion of the extraction steam flow to the back end will generate additional power in the existing turbine generator. Heated feedwater

61

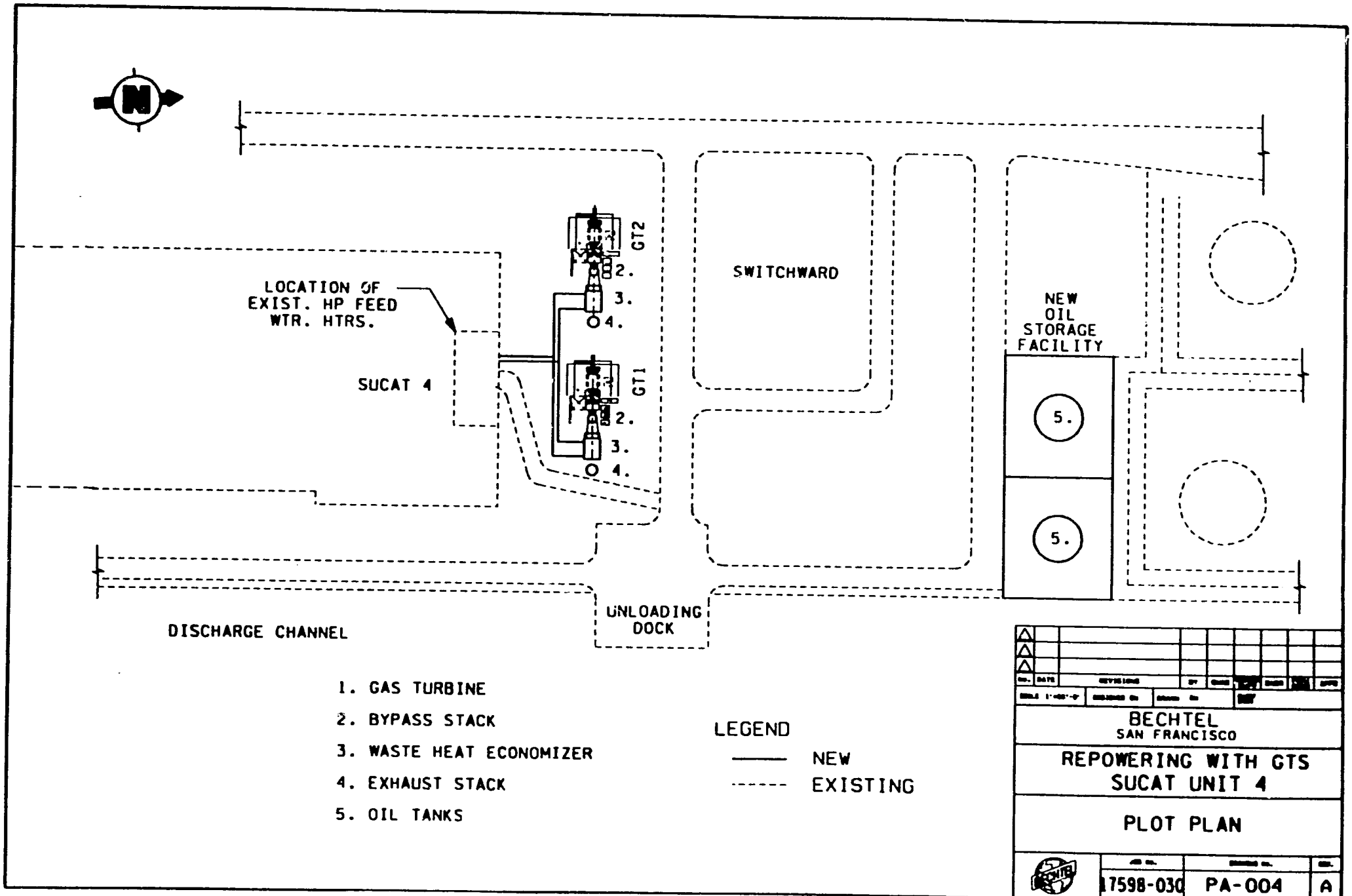

DRAWING 2.4.1-1

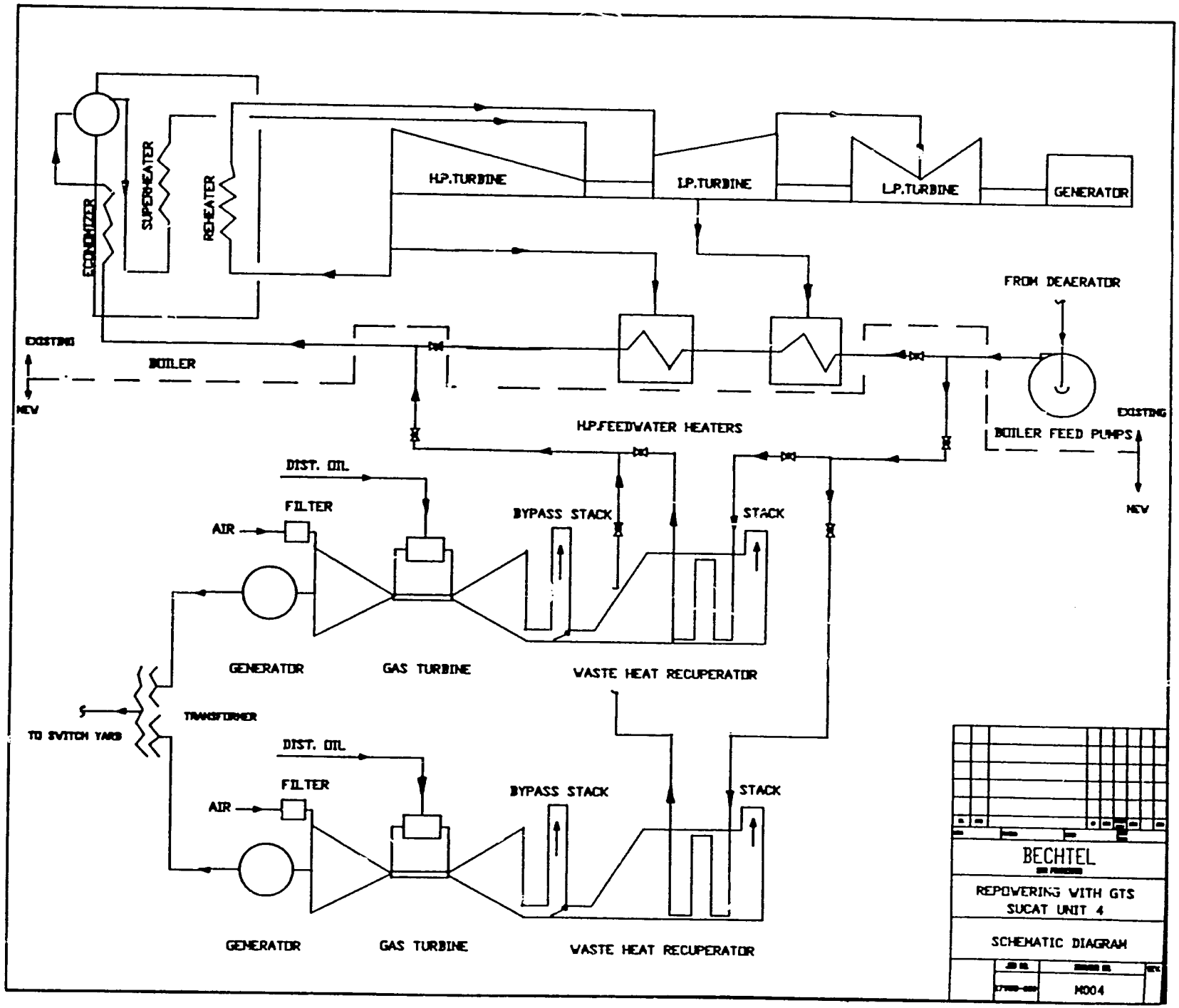

DRAWING 2.4.1-2

from the WHRE will flow to the feedwater discharge header at the outlet of the final high pressure feedwater heater at about 480F. Because of the high inlet feedwater temperature to the WHRE the stack gas temperature will be above 450F.

A fuel storage and handling system will be provided at the site. Oil delivery is assumed to be by barges. Two tanks, each with a capacity of 500,000 gallons will be required to provide a week's oil consumption at 100% output level.

The electrical power generated by new gas turbine generator sets will be stepped up to 115 kV through a three winding transformer and connected to existing 115 kV sub-station by adding two new circuit breakers as shown on the single line diagram Drawing 2.4.1-3 (No. E004).

The auxiliary power required for the gas turbine generator set will be obtained at 13.8 kV and stepped down to 480 V to feed the auxiliary loads as shown on the single line diagram Drawing 2.4.1-3 (No. E004). The 480 V loads for turbine generator set will be fed to form a dedicated 13800-480 V transformer, 480 V switchgear and MCC. The 13800-480 V transformers and 480 V switchgear will be rated to supply 480 V auxiliary loads of at least two turbine generator sets. Electrical equipment will be suitable for outdoor installation. Switchgear and MCC will have NEMA-3R, walk-in type enclosures.

As advised by NPC, the study excludes consideration of transmission line requirements from the plant as NPC plans to consider them separately.

A list of major equipment required for the plant is included as Appendix E.

2.4.2 Expected Plant Performance

JBE proposed to repower Sucat Unit 4 with Frame 6 gas turbine generators. In their proposal, JBE estimated that the existing steam turbine generator will generate an additional 30 MW at the generator terminals. Siemens, the manufacturer of the existing steam turbine generator revised this estimate to 24 MW.

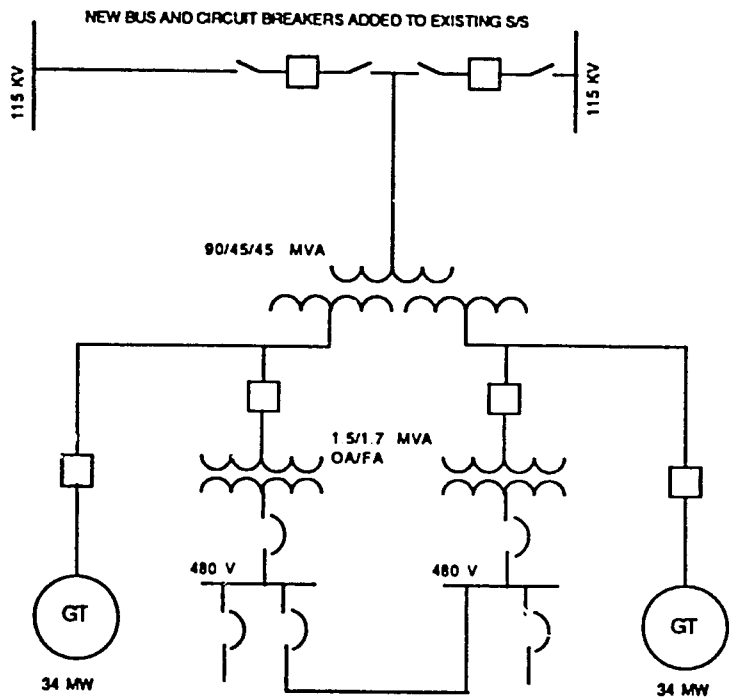

BECHTEL
SANFRANCISCO

REPOWERING WITH GTS
SUCAT UNIT 4

ELECTRICAL SINGLE LINE DIAGRAM

JOB NO.	DRAWING NO.	REV.
17958-030	E004	

DRAWING 2.4.1-3

61

However, as noted earlier in this section, the capability increase is limited to 18 MW only. Therefore, additional heat if available to the existing unit, through repowering, should be treated as reduction of fuel input to the boiler while operating at (333-18) 315 MW level.

The extent of the modifications required for the existing boiler and steam turbine generator due to repowering must be determined by the manufacturer. For this study, it is assumed that some modifications to them will be required. However, NPC needs to review the required modifications with the manufacturers before proceeding with repowering of Sucat Unit 4.

Heat Balance Drawing 2.4.2-1 (No. HB9) shows GT performances at 100% output in simple cycle operating mode at design ambient conditions. Heat Balance Drawing 2.4.2-2 (No. HB10) shows these performances at annual average ambient conditions. Heat Balance Drawing 2.4.2-3 (No. HB11) shows GT performances at 100% output in repowered mode at ambient design conditions. Heat Balance Drawing 2.4.2-4 (No. HB12) shows these performances at annual average ambient conditions. These heat balances are based on using distillate oil as fuel.

Table 2.4.1 summarizes the plant performances at design and annual average ambient conditions based on using distillate oil. Table 2.4.2 shows annual electricity generation and fuel consumption with distillate oil and Bunker C oil as fuel. It is estimated that the output decreases by 6% and heat rate increases by 2% if treated Bunker C oil is used.

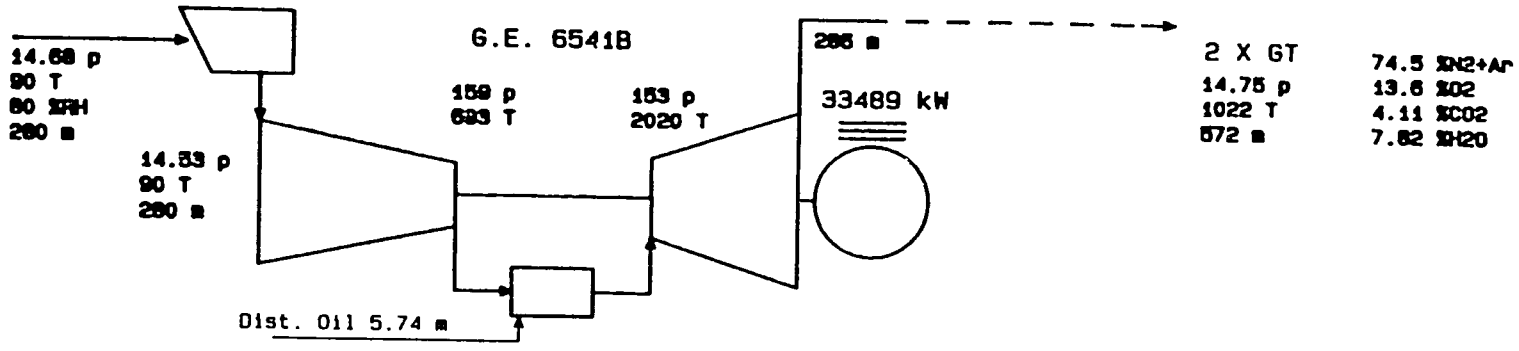

GTPRO Bechtel Corp SFRO - (NK) 07-19-1990 10:24:56 HB9

DRAWING 2.4.2-1

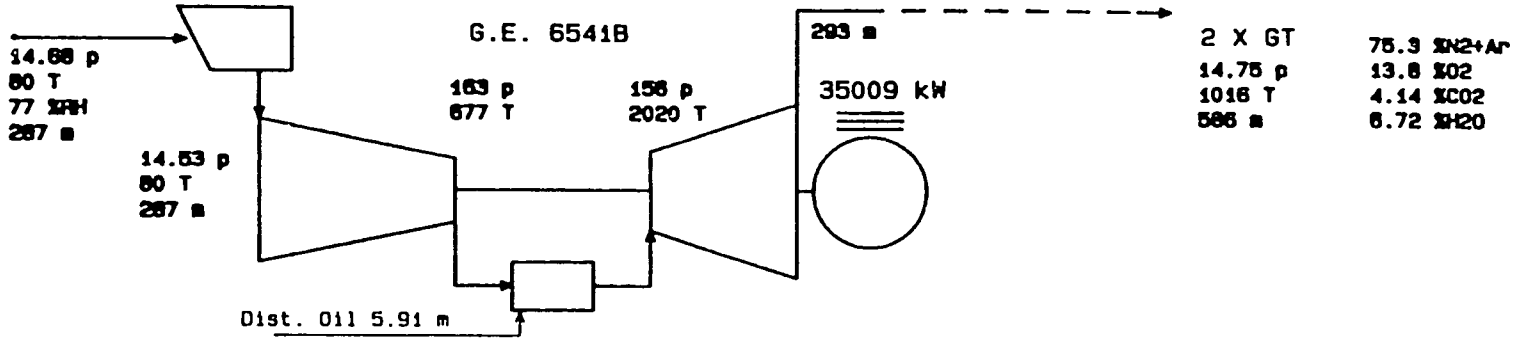

GTPRO Bechtel Corp SFRO - (NK) 07-19-1990 10: 28: 09

HB10

DRAWING 2.4.2-2

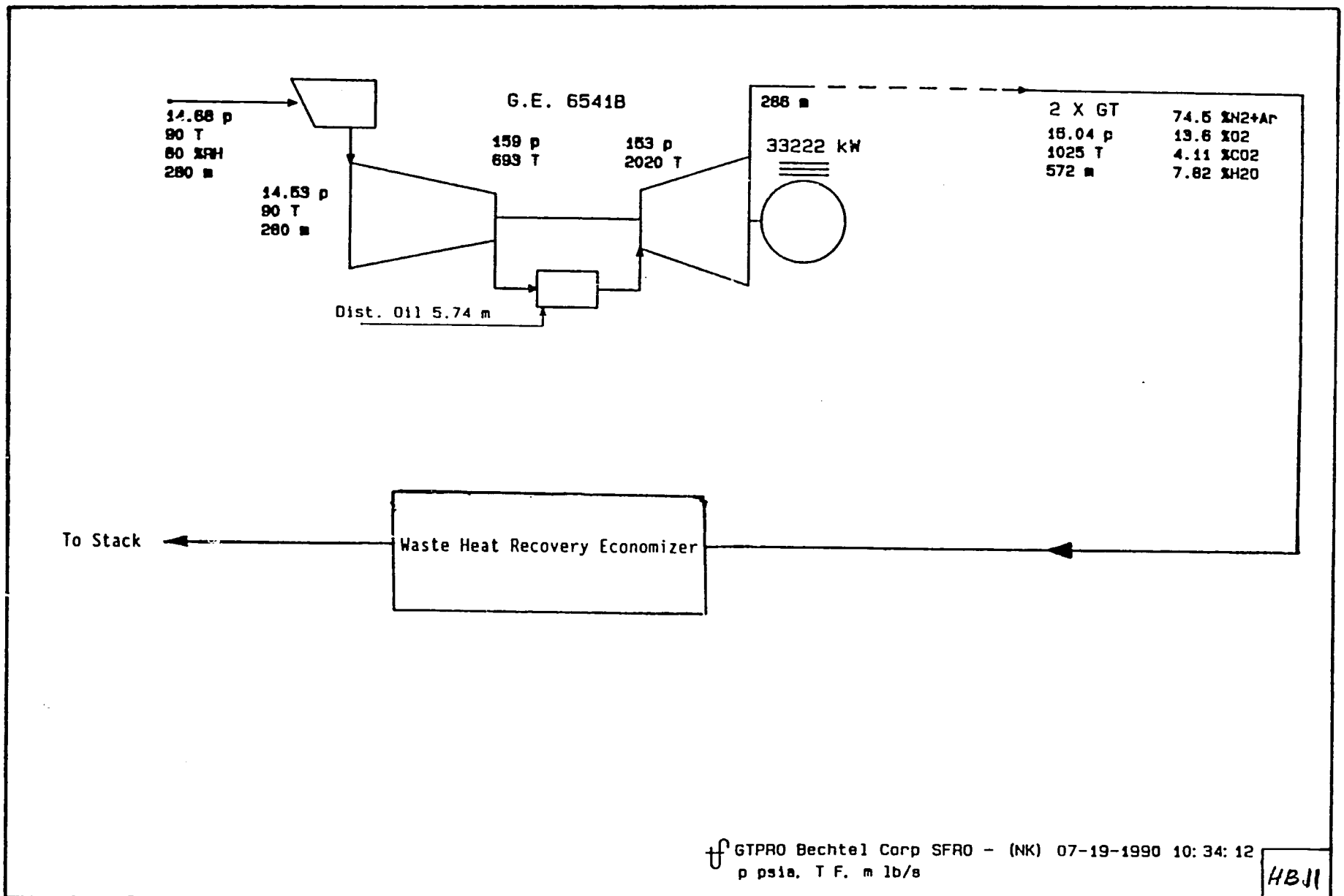

DRAWING 2.4.2-3

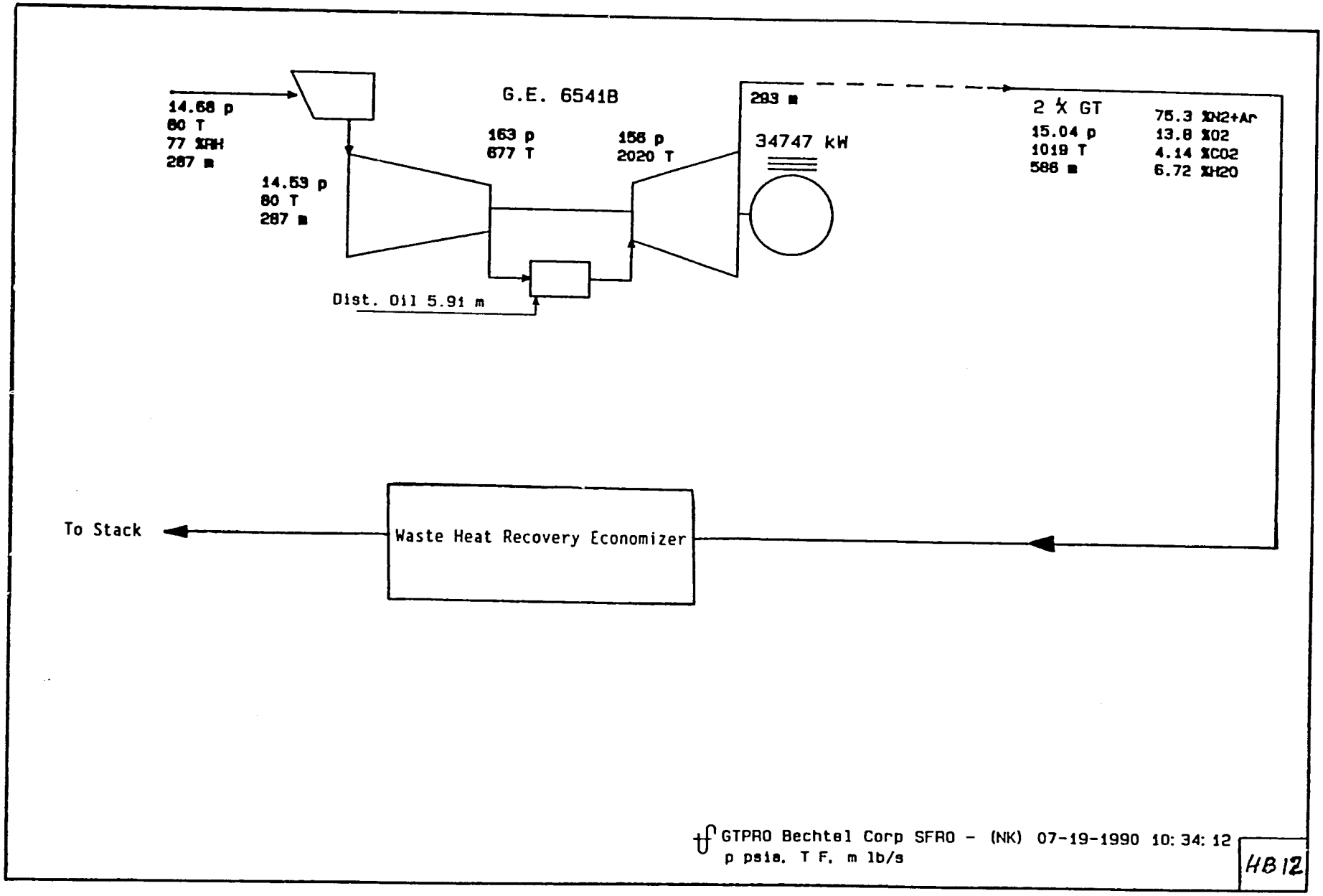

DRAWING 2.4.2-4

TABLE 2.4.1

ESTIMATED PLANT PERFORMANCE UNIT 4 REPOWERING AT SUCAT (BASED ON DISTILLATE OIL)

Ambient Conditions	Design			Annual Average		
Power Plant Cycle	**GTs in Simple Cycle**	**GTs in Comb. Cycle**	**GTs in Repowering**	**GTs in Simple Cycle**	**GTs in Comb. Cycle**	**GTs in Repowering**
1. Gas Turbine Type	GE 6541B	GE 6541B	GE 6541B	GE 6541B	GE 6541B	GE 6541B
2. Number of Gas Turbines	2	2	2	2	2	2
3. Power Output from GTs (Gross), MW	67.0	66.4	66.4	70.0	69.5	69.5
4. Increase in Power Output from ST (Gross), MW	-----	36.8	24*	-----	37.0	24*
5. Total Power Output (Gross), MW	67.0	103.2	84.4*	70.0	106.5	87.5*
6. Estimated Auxiliary Power Consumption, MW	0.7	2.1	1.0	1.0	2.1	1.0
7. Net Increase in Power Output, MW	66.3	101.1	83.4*	69.0	104.4	86.5*
8. Total Heat Input to GTs, kW(TH)/hr (LHV)	220.560	223,177	223,177	227,141	227,141	227,141
9. Net Heat Rate (LHV),						
Btu/kWhr	11,354	7446	9133*	11,235	7426	8962*
Kg.Cal/kWhr	2861	1876	2302	2831*	1871	2258*
10. Cycle Efficiency (LHV), %	30.1	45.8	37.4*	30.4	46.0	38.1

*Assumed 18 MW increase in the continuous capability of Unit 4 steam turbine generator. Ignored changes to Unit 4 boiler heat input.

TABLE 2.4.2

ELECTRICITY GENERATION AND FUEL CONSUMPTION UNIT 4 REPOWERING AT SUCAT

	Fuel Fired	Light Distillate Oil	Treated Bunker C Oil
1.	Plant Capacity Factor (assumed)	75%	75%
2.	Net Plant Output, MW (at annual average ambient conditions)	86.5	81.3
3.	Annual Electricity Generation, kWhrs x 10^6	568.3	534.1
4.	Annual Heat Input to gas turbine,		
	Btu (LHV) x 10^9	5093.2	4883.4
	Btu (HHV) x 10^9	5424.3	5200.8
	Kg.Cal (HHV) x 10^9	1366.9	1310.6
5.	Decrease in Annual Heat Input to Unit 4 Boiler,		
	Btu (HHV) x 10^9	137.83	137.83
	Kg.Cal (HHV) x 10^9	34.73	34.73
6.	Economic Plant Life, Years		
	- Combined cycle	17	17
	- Simple cycle	8	8

SECTION 3 - COST AND SCHEDULE

SECTION 3 - COST AND SCHEDULE

3.0 INTRODUCTION

This section presents order-of-magnitude estimates for capital costs and annual operating and maintenance costs together with preliminary project schedules and cash flows for the four alternatives being considered.

3.1 CAPITAL COST ESTIMATES

Budgetary quotes were received from suppliers of major equipment items, i.e. gas turbine generators, steam turbine generators, and heat recovery steam generators and economizers including ocean freight and insurance. Also, "best guess" estimates were received from U.S. manufacturers for modification to the existing boiler and turbine at Malaya Unit 2. We have provided an allowance of 9 million dollars for replacing reheater, cold and hot reheat steam lines and for modifying the steam path in the existing steam turbine for Case 1 of Malaya Unit 2 repowering. An allowance of 3 million dollars is made for increasing the size of the reheater, adding safety valves and steam path modifications for Case 2 of Malaya Unit 2 repowering. An allowance of 3 million dollars is made for modifying the existing equipment at Sucat Unit 4. The balance of the mechanical and electrical equipment was priced at a present day, July 1990 level, on a U.S. basis although procurement will be on a world market basis.

Bulk material and installation costs were developed by factoring based on the major equipment configuration and historical experience. These were modified to reflect anticipated local pricing, labor productivity, and wage rates resulting from our visit to the Philippines in May 1990. Included are foundations, structures, site work, piping, instrumentation, electrical raceway, and wiring. Also included is the demolition of two oil storage tanks for the conversion alternate at Bataan and the demolition of a warehouse building at Sucat to provide room for the repowering.

Contractors overhead and profit are included at 20% and a contractors tax of 4% of all costs excluding the major equipment. It is assumed that major equipment will be purchased independent of construction.

Design engineering, construction management, fees and project contingency have been included totaling to approximately 20%. Value Added tax of 10% has been applied to total costs.

The capital cost estimates exclude:

- Escalation beyond July 1990 (this is considered in the economic modeling)
- Land and water rights
- Transmission lines
- Costs of financing (also included in economic modeling)
- Noise abatement
- Custom duties
- Taxes other than contractors tax and value added tax
- Startup and operational inventories of fuel oil, lube oil, and chemicals
- Operator training
- Catalytic converters

TABLE 3.1

ORDER OF MAGNITUDE CAPITAL COST SUMMARY

Millions of U.S. 1990 Dollars

	Bataan New	Bataan Conversion	Malaya 1		Sucat 4
			Case 1	Case 2	
Gas Turbine Generators	54.5	---	16.5	16.5	19.3
Heat Recovery SGs/Economizer	15.8	12.6	1.5	1.5	1.6
Steam Turbine Genrators	11.5	9.0	--	--	---
Other Equipment and Materials	29.6	16.5	4.6	4.6	5.3
Installation	6.7	4.5	1.7	1.7	1.9
Contractors Overhead and Profit	7.3	4.2	1.3	1.3	1.4
Contractors Tax	1.7	2.0	0.3	0.3	0.3
Engineering, Construction Mgmt, Fees and Contingency	25.9	9.2	5.1	5.1	6.2
Subtotal	153.0	57.0	31.0	31.0	36.0
Value Added Tax	15.0	6.0	3.0	3.0	4.0
Total	168.0	63.0	34.0	34.0	40.0
Modifications and Replacement of Existing Equipment	---	---	9.0	3.0	3.0
Initial Spares	2.0	2.0	0.3	0.3	0.3
Total	170.0	65.0	43.3	37.3	43.3

3.2 OPERATION AND MAINTENANCE COSTS

Annual operating and maintenance (O&M) costs were estimated based on current experience in the United States.

O&M costs consist of the plant staff payroll and administrative expenses such as supplies communications, utilities, etc.; routine maintenance expenses for materials, parts, and outside labor; major maintenance expenses; and chemicals for water conditioning and treatment.

Major maintenance is covered by establishing a fund to which periodic contributions are budgeted. Major maintenance is considered mainly a fixed O&M cost (67% - 80%) and the estimates are based on a six year major overhaul cycle on the gas turbine generators operating at a 75% capacity factor.

3.3 PROJECT SCHEDULES

The project milestone schedules are shown in Figures 3.3.1 - 3.3.5. The equipment delivery lead times are based on supplier's quotation by telephone. Installation durations are based on actual experience from other Bechtel projects.

Figure 3.3.1 shows the milestone schedule for the 300 MW combined cycle power plant at Bataan. The schedule is based on:

- Gas turbine generator fabrication and delivery lead times are 12 months plus 1 month for overseas shipping. There is a 1 month lag between shipment of units.

- Steam turbine generator fabrication and delivery lead time is 14 months plus 1 month for overseas shipping.

Figure 3.3.1

PHILIPPINES REPOWERING STUDY
300 MWe COMBINED CYCLE POWER PLANT AT BATAAN

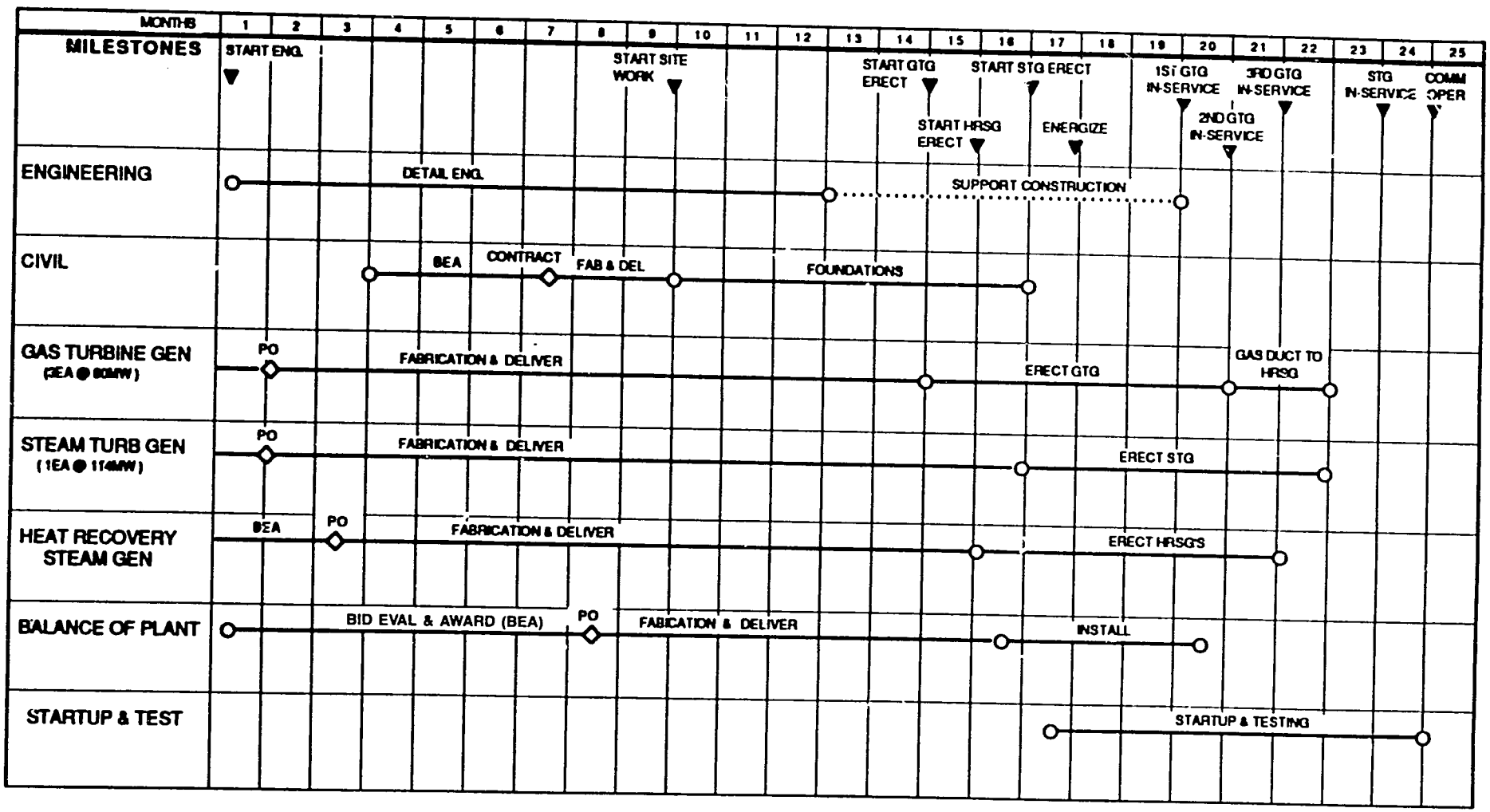

Tuesday, August 7, 1990

74

- Heat recovery steam generators fabrication and delivery lead times are 11.5 months plus 1 month for overseas shipping. There is a 1 month lag between shipment of units.

- The gas turbines are staggered by 1 month for in-service for economy of the construction effort and to achieve generating capacity as early as possible.

- Individual gas turbine outages are required to tie-in the gas duct to the HRSG's.

- The critical path for the project completion is through fabrication and delivery of the steam turbine generator and to install, startup, and test it.

Figure 3.3.2 shows the milestone schedule for the conversion of the existing gas turbine generators at Bataan to combined cycle. The schedule is based on the following:

- The steam turbine generator fabrication and delivery lead time is 14 months plus 1 month for overseas shipping.

- The heat recovery steam generator fabrication and delivery lead times are 10.5 months plus 1 month for overseas shipping. There is a 1 month lag between units.

- The critical path is through fabrication and delivery of the steam turbine generator and to install, startup, and test it.

Figure 3.3.3 shows the milestone schedule for repowering Malaya Unit 2, Case I. The schedule is based on the following:

- The gas turbine generator fabrication and delivery lead time is about 12 months plus 1 month for overseas shipping.

Figure 3.3.2

PHILIPPINES REPOWERING STUDY
CONVERSION OF EXISTING GT'S AT BATAAN TO COMBINED CYCLE

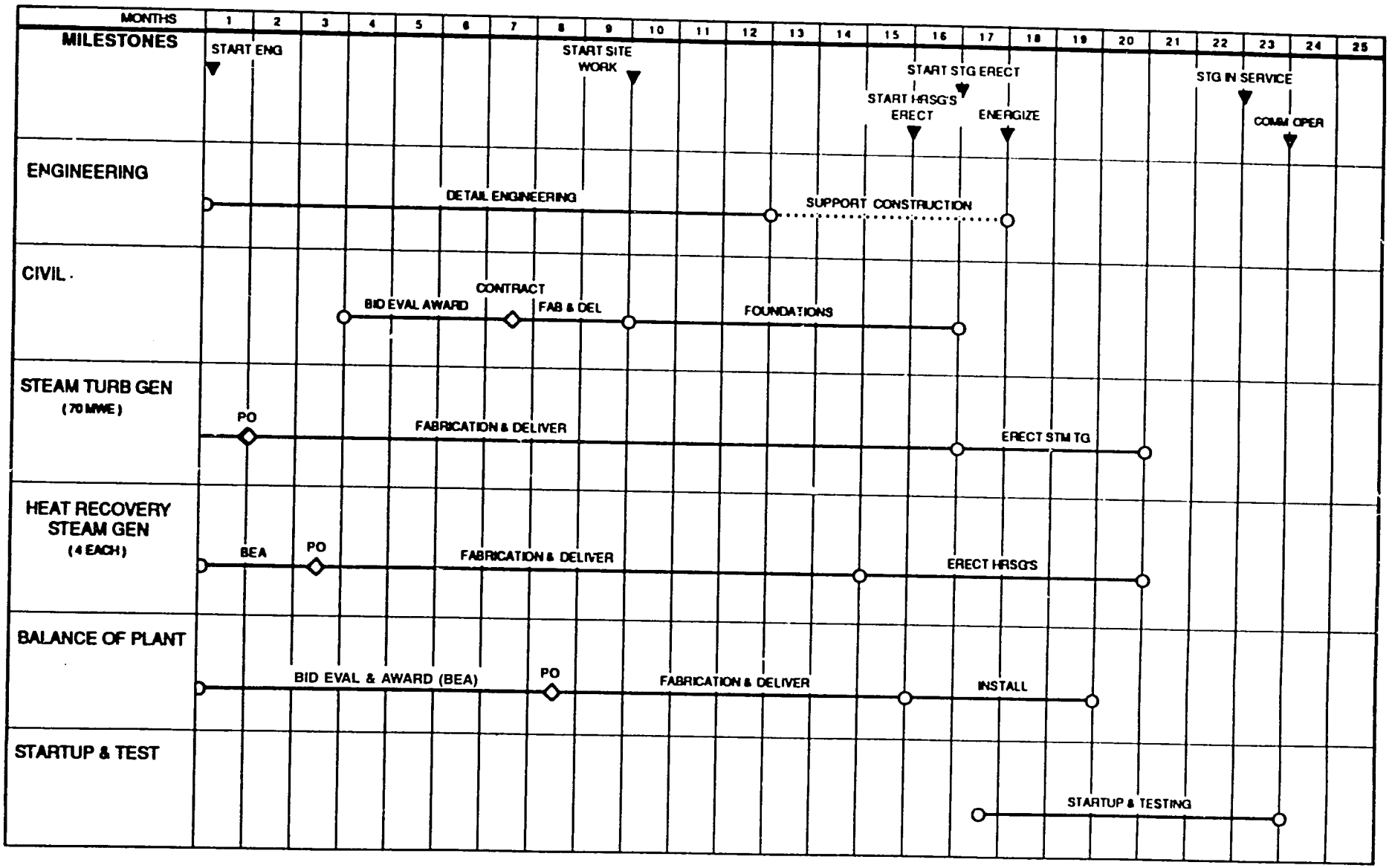

Tuesday, August 7, 1990

76

Figure 3.3.3

PHILIPPINES REPOWERING STUDY
REPOWERING WITH GTG MALAYA UNIT 2
CASE 1

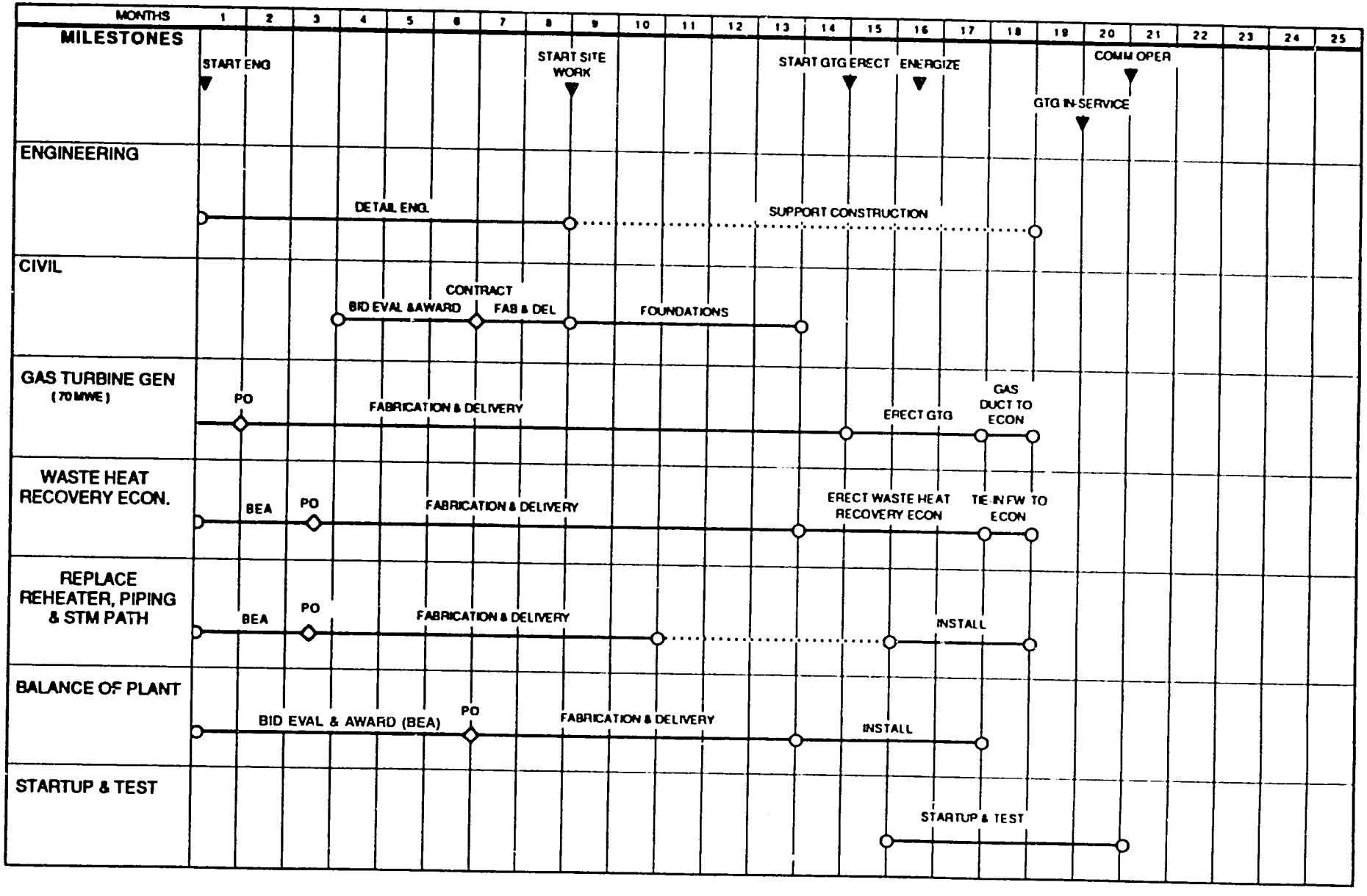

Tuesday, August 14, 1990

- The reheater replacement material fabrication and delivery is 7.5 months plus 1 month for overseas shipping.

- The waste heat recovery economizer fabrication and delivery is 9.5 months plus 1 month for overseas shipping.

- A unit outage is required to replace the reheater, reheat piping safety valves and steam path as well as tie-in of the feedwater line to the waste heat recovery economizer. This outage would last approximately 3 months.

- The critical path is through fabrication and delivery of the gas turbine generator, to install it and to tie-in the feedwater to the economizer, to startup and test.

Figure 3.3.4 shows the milestone schedule for repowering Malaya Unit 2 Case 2. The schedule is based on the following:

- The gas turbine generator fabrication and delivery lead time is about 12 months plus 1 month for overseas shipping.

- Reheater modification material fabrication and delivery is 7.5 months plus 1 month for overseas shipping.

- The waste heat recovery economizer fabrication and delivery is 9.5 months plus 1 month for overseas shipping.

- A unit outage is required to modify the reheater, replace one safety valve and the steam path as well as tie-in of the feedwater line to the economizer. This outage as in Case I would last approximately 3 months.

18

Figure 3.3.4

PHILIPPINES REPOWERING STUDY
REPOWERING WITH GTG MALAYA UNIT 2
CASE 2

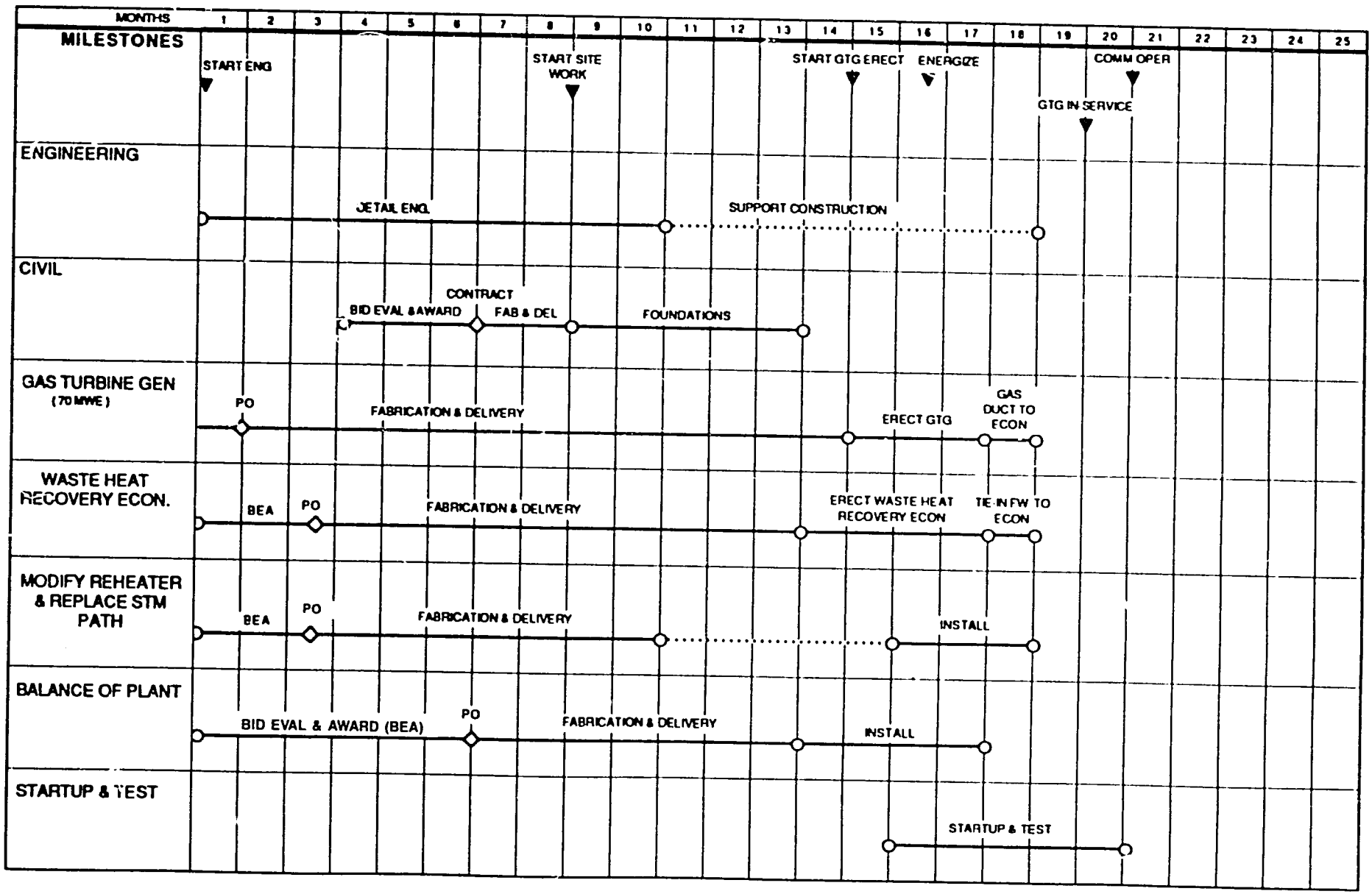

Tuesday, August 14, 1990

- The critical path is through fabrication and delivery of the gas turbine generator, to install it and to tie-in the feedwater to the economizer, to startup and testing.

Figure 3.3.5 shows the milestone schedule for repowering Sucat Unit 4. The schedule bases are as follows:

- The gas turbine generator fabrication and delivery lead times are 12 months plus 1 month for overseas shipping. There is a 1 month lag between shipment of units.

- The waste heat recovery economizer fabrication and delivery lead times are 10.5 months plus 1 month for overseas shipping. There is a 1 month lag between shipment of units.

- The gas turbine generators are staggered by 1 month for in-service for economy of the construction effort and to achieve generating capacity as early as possible.

- The critical path is through the fabrication and delivery of the gas turbine generators, to install them, to tie-in the feedwater to the economizers, to startup and test.

3.4 EXPENDITURE SCHEDULE

As seen in Section 3.3, each of the alternatives are completed within two years from start of engineering. Progress payments are normally required for major equipment purchase. Other equipment and materials are generally paid for when received and as contractors work is performed.

Table 3.2 illustrates the expenditure schedule for each alternative.

Figure 3.3.5

PHILIPPINES REPOWERING STUDY
REPOWER WITH GTG'S SUCAT UNIT 4

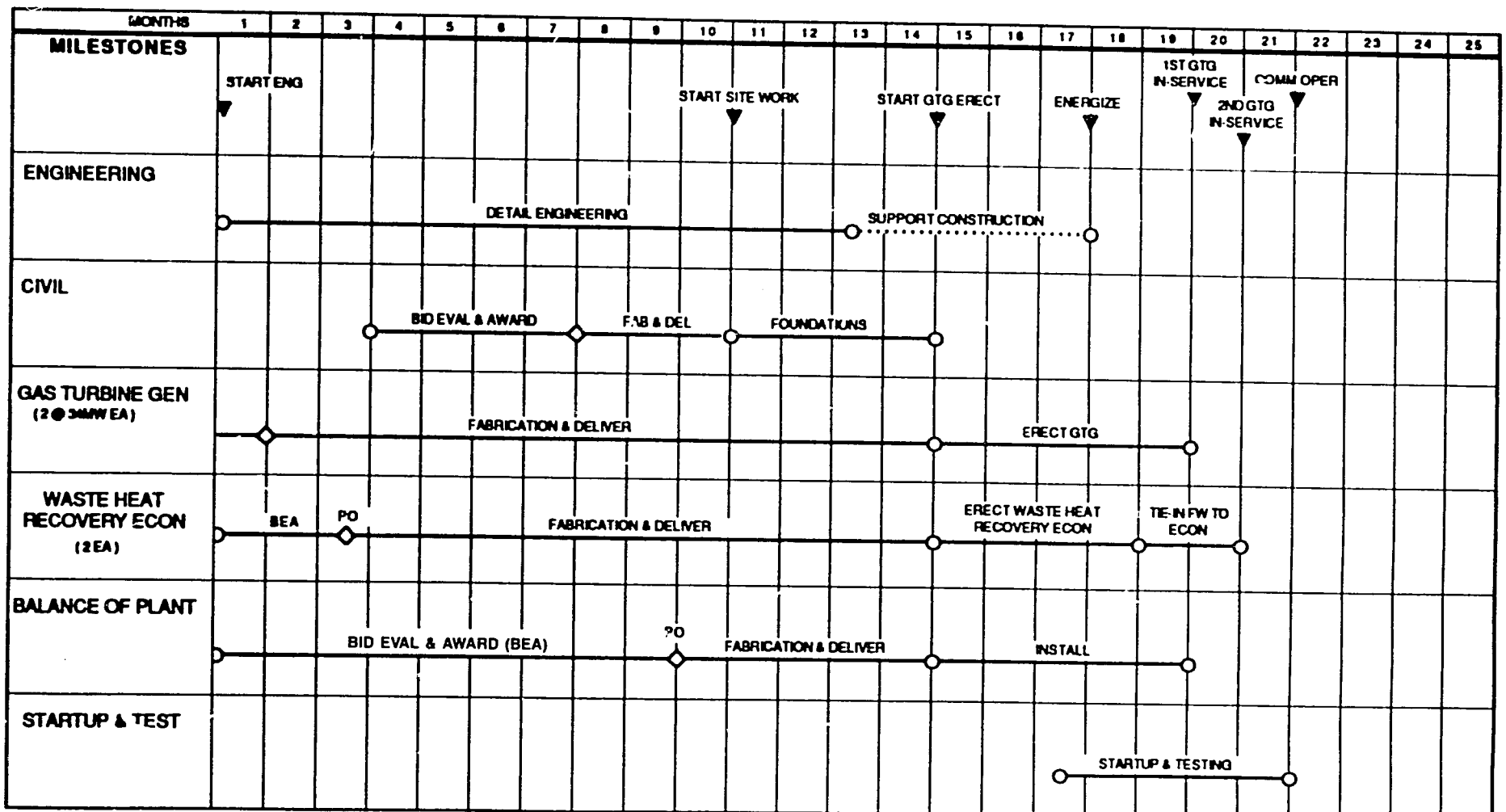

Tuesday, August 7, 1990

TABLE 3.2

EXPENDITURE SCHEDULE

Capital Expenditures	10^6 Year 1	10^6 Year 2	Total
Alternative			
Bataan - New CC	114	56	170
Bataan - Conversion	35	30	65
Malaya 2 - Repowering			
Case 1	41	2.3	43.3
Case 2	35	2.3	37.3
Sucat 4 - Repowering	32	11.3	43.3

SECTION 4 - ENVIRONMENTAL CONSIDERATIONS

SECTION 4 - ENVIRONMENTAL CONSIDERATIONS

4.0 INTRODUCTION

In generating power with gas turbines using distillate or treated special fuel oils, three potential air pollution emissions are of primary interest: sulfur dioxide (SO_2), nitrogen oxide (NO_x), and carbon monoxide (CO). Other significant environmental concerns are: noise and liquid effluents. The discussion in this section reviews some of the prevailing regulations for these emissions or discharges.

4.1 AIR QUALITY STANDARDS

The following information on air quality standards are taken from the Philippines National Pollution Control Commission (NPCC) Rules and Regulations published in the Official Gazette, Vol. 74, No. 23, June 5, 1978.

4.1.1 Stationary Source Emission Standards

NPCC emission standards for SO_2, NO_X, and CO from stationary sources are as shown in Table 4.1.

4.1.2 National Ambient Air Quality Standards

Table 4.2 shows the ambient air quality standards.

4.2 IMPACT ON AIR QUALITY - GAS TURBINE POWER PLANTS

4.2.1 Estimated Emissions from Gas Turbines

The following are the estimated uncontrolled emissions from the gas turbines with 1% sulfur content in the distillate oil used as fuel.

94

TABLE 4.1

STATIONARY SOURCE EMISSION STANDARDS

Pollutants	Maximum Permissible Emissions
Sulfur dioxide (SO_2)	1500 mg/scm
Nitrogen oxides (NO_X)	2000 mg/scm
Carbon monoxide (CO)	N/A

TABLE 4.2

NATIONAL AMBIENT AIR QUALITY STANDARDS

Pollutants	Concentration		Exposure Time
	µg/scm	(ppm)	Hour
Sulfur dioxide	369	(0.14)	24
	850	(0.30)	1
Nitrogen oxide	190	(0.1)	1
Carbon monoxide	10,000	(9.0)	8
	35,000	(30)	1

Gas Turbine Type	GE 7111EA	GE 5541B	ABB GT11N
Sulfur dioxide (SO_2)	450 mg/scm	460 mg/scm	460 mg/scm
Nitrogen oxide (NO_X)	350 mg/scm	415 mg/scm	490 mg/scm
Carbon monoxide (CO)	12 mg/scm	12 mg/scm	11 mg/scm

These emissions are well within the NPCC Standards for plant emissions.

If the current NPCC Standards for emission are revised in future to achieve lower emission levels, then emission controls will be required for the gas turbines. Generally, sulfur dioxide emissions are controlled by limiting the sulfur content of the distillate oil or treated special fuel oils. Nitrogen oxide emissions are normally controlled by water injection or steam injection. Selective Catalytic Reduction (SCR) can be used in the HRSGs for additional control of the NO_x from the plant. It is desirable that the gas turbines used for repowering and combined cycle applications are suitable for future incorporation of these emission control methods.

4.2.2 Impact on Ambient Air Quality - Gas Turbine Power Plants

Determination of the plant ambient air quality requires existing air quality baseline data and additional meteorological data. The determination of the plant ambient air quality is beyond the scope of this study.

4.3 NOISE

4.3.1 Environmental Quality Standards for Noise

The ambient quality standards for noise for light industrial zone area (1) and heavy industrial zone area (2) are as shown in Table 4.3.

TABLE 4.3

AMBIENT QUALITY STANDARDS FOR NOISE

Area	Daytime (0700-1700)	Morning and Evening (0500-0700 & 1700-2100)	Nighttime (2100-0500)
1	70	65	60
2	75	70	65

The main source of noise in gas turbine generator plants are the gas turbines. Gas turbines are normally noise insulated and enclosed to reduce noise levels. It is expected that the gas turbine suppliers can meet these noise level standards without difficulty. The steam turbine and auxiliaries will be located indoors to minimize noise emission.

4.4 NATIONAL POLLUTION CONTROL COMMISSION (NPCC) EFFLUENT STANDARDS

4.4.1 Effluent Standards

Table 4.4 provides standards for various parameters.

4.4.2 Gas Turbine Plant Effluents

The discharge from the plant facilities will be subjected to treatment (physical/ chemical and biological secondary treatment for sanitary waste water) to assure that the treated effluent is in compliance with the existing effluent standards of the National Pollution Control Commission.

TABLE 4.4

NPCC EFFLUENT STANDARDS

Parameters	Standards
Color, in platinum cobalt units	100
pH	6.0 - 8.5
Temperature, deg. C	40
Phenols, mg/l	0.05
Suspended Solids, mg/l	30
BOD, mg/l	30
Oil/grease, mg/l	5
Detergents, mg/l	1
Barium, mg/l	2
Cadmium, mg/l	0.01
Copper, mg/l	1
Chromium (Hexavalent), mg/l	0.05
Dissolved Iron, mg/l	1
Lead, mg/l	0.01
Lithium, mg/l	0.05
Dissolved Manganese, mg/l	1
Mercury (Total), mg/l	0.002
Molybdenum, mg/l	0.1
Nickel, mg/l	0.5
Selenium, mg/l	0.05
Silver, mg/l	0.1
Zinc, mg/l	5
Arsenic, mg/l	1
Cyanide, mg/l	0.1
Fluoride, mg/l	3
Polychlorinated Biphenyl, mg/l	0.003

SECTION 5 - ECONOMIC AND FINANCIAL EVALUATIONS

SECTION 5 - ECONOMIC AND FINANCIAL EVALUATIONS

5.0 INTRODUCTION

There are two distinct aspects of a financial evaluation: (a) What is highest value option among those evaluated (maximum present value of benefits or minimum present value of costs)? and (2) What is the best way to finance the highest value option? This evaluation focuses on identifying NPC's least cost option for providing power to the Luzon Grid. A cursory discussion of the various financing options is also provided.

An economic analysis is the culmination of project definition. It provides a systematic and consistent approach for selecting the best among competing options for power supply. However, uncertainty is inherent in economic evaluations. A sensitivity analysis can provide a context for assessing the implications of uncertainty and for making a more informed decision. In addition to supporting a conclusion that the chosen option is best under foreseeable circumstances it can identify key assumptions that should be refined prior to a final decision. Sensitivity analyses have been performed for each option (both distillate oil-fired and Bunker C-fired options) and are discussed further in Section 5.4. Four options have been identified and defined for meeting the growing power demand in the Luzon Grid:

- New 300 MWe Combined Cycle Plant at Bataan;
- Conversion of Existing Gas Turbines from Simple Cycle to Combined Cycle at Bataan;
- Repowering of Malaya Unit 2
  - Case 1
  - Case 2; and
- Repowering of Sucat Unit 4

5.1 ASSUMPTIONS

The ranking of options is dependent on the assumptions incorporated in the financial analysis. Key assumptions for each option are summarized in Tables 5.1.1 and 5.1.2. Other assumptions are discussed in Sections 2 and 3.

5.2 METHODOLOGY

Net present value analysis provides a systematic means for choosing among competing capital budgeting alternatives and has largely supplanted competing methods of analysis.

This evaluation uses net present value analysis to develop a power price as a means of ranking alternatives for NPC power supply. The "present value" power price which forms the basis for ranking the alternatives is the Levelized Cost of Power, defined as follows:

Levelized Cost of Power:

> That level cost of power which, when multiplied by the kilowatt-hours of power production, would result in the same present value of costs to the utility as the non-levelized tariff.

or

NPV(Levelized Costs) = NPV(Non-Levelized Costs)

or

TABLE 5.1.1

PROJECT ASSUMPTIONS*
DISTILLATE FIRED OPTIONS
(ALL DOLLARS IN MILLIONS)

Description	New 300 MW at Bataan	GT Conversion at Bataan	Malaya Case 1	Malaya Case 2	Sucat 4
Capital Cost	170.0	65.0	43.3	37.3	43.3
Annual O&M	2.4	1.2	0.4	0.4	0.5
Net Heat Rate, Btu/kWhr	7727.5	8014.9	9510.0 (1)	11743.8 (2)	9544.8 (3)
Net MW	335.7	65.7	91.0	72.0	86.5
Capacity Factor	75.0%	75.0%**	75.0%	75.0%	75.0%
Annual Boiler Fuel Savings, MMBtu (HHV)	0.0	0.0	426400.0	1947800.0	137830.0
Fuel Cost, $/MMBtu					
Distillate	4.31	4.31	4.35	4.35	4.35
Boiler Fuel	2.80	2.80	2.80	2.80	2.80

* Project quantities for Bataan conversion and repowering options are incremental to existing plant.
**Incremental Megawatt-hours = 1014200; incremental fuel consumption equals = 6975000 MMBtu

(1) Assumed 20 MW continuous capability increase in the existing steam turbine generator. Ignored changes to boiler heat input.

(2) Assumed no increase in the continuous capability of the existing steam turbine. Ignored changes to boiler heat input.

(3) Assumed 18 MW continuous capability increase in the existing steam turbine. Ignored changes to boiler heat input.

TABLE 5.1.2

PROJECT ASSUMPTIONS*
BUNKER C FIRED OPTIONS
(ALL DOLLARS IN MILLIONS)

Description	New 300 MW at Bataan	GT Conversion at Battan	Malaya Case 1	Malaya Case 2	Sucat 4
Capital Cost	170.0	65.0	43.3	37.3	43.3
Annual O&M	2.4	1.2	0.4	0.4	0.5
Net Heat Rate, Btu/kWhr	7882.2	8174.5	9705.2 (1)	11976.6 (2)	9736.8 (3)
Net MW	315.6	61.8	85.5	67.7	81.3
Capacity Factor	75.0%	75.0%**	75.0%	75.0%	75.0%
Annual Boiler Fuel Savings, MMBtu (HHV)	0.0	0.0	426400.0	1947800.0	137830.0
Fuel Cost, $/MMBtu					
Treated Bunker C***	3.27	3.27	3.30	3.30	3.30
Boiler Fuel	2.80	2.80	2.80	2.80	2.80

* Project quantities for Bataan conversion and repowering options are incremental to existing plant.
** Incremental Megawatt-hours = 953526; incremental fuel consumption equals = 6687630 MMBtu
*** Includes approximately $0.50/MMBtu for treatment of Bunker C oil for use in the gas turbines.

(1) Assumed 20 MW continuous capability increase in the existing steam turbine generator. Ignored changes to boiler heat input.

(2) Assumed no increase in the continuous capability of the existing steam turbine. Ignored changes to boiler heat input.

(3) Assumed 18 MW continuous capability increase in the existing steam turbine. Ignored changes to boiler heat input.

NPV(Levelized Tariff x Kilowatt-hours) = NPV(Non-Levelized Tariff x Kilowatt-hours)

or

(Since Levelized Tariff is a constant over time)

Levelized Tariff * NPV(Kilowatt-hours) = NPV(Non-Levelized Tariff x Kilowatt-hours)

or

Levelized Tariff = NPV(Non-Levelized Tariff x Kilowatt-hours)/NPV(Kilowatt-hours)

or

Levelized Tariff = NPV(Project Costs)/NPV(Kilowatt-hours)

Therefore, the levelized tariff and non-levelized tariff will result in the same present value of costs to NPC and, other things being equal, NPC should be indifferent between the two tariff structures. (Or conversely, NPC should have a preference for the project producing the lowest levelized tariff.)

For a particular power generation option the levelized tariff is developed from the project costs or revenue requirements as generated in a Bechtel Financing Services, Inc. computer model. A typical computer printout for Bataan New 300 MW plant using Bunker C oil is included as Appendix F. Similar computer printouts are generated for each of the other options both for distillate oil and Bunker C oil firing cases.

Project assumptions are used to develop projections of project costs and power generation over the assumed useful plant life. The present value of project costs

and power generation form the basis for calculating the levelized cost of power. Since different levels of generation are explicitly included in the determination of a levelized price no further adjustments are necessary to account for different plant sizes or generation levels.

To correctly evaluate and rank the alternatives they must be evaluated over identical lives. This may be problematic for repowering alternatives where the existing plant has a remaining useful life substantially less than the useful life of the new equipment. To address this issue, it was assumed that the repowered plant would operate in a simple cycle mode commencing with the end of the useful life of the existing plant. Using this methodology each option could be evaluated over identical periods.

In calculating the levelized cost of power, escalation rates are assumed for those quantities subject to escalation. Therefore, the levelized cost of power is not directly comparable to today's cost of power. To make the levelized cost of power directly comparable to today's cost of production the project costs need to be stated in terms of today's dollars. This adjustment is reflected in the Constant Dollar Cash Flow shown in Table 3.2 in Section 3. Current dollar costs are restated in terms of today's dollars by multiplying by the Gross Domestic Product Deflator, assumed to be equal to the following:

$$\frac{1}{(1 + \text{General Inflation Rate})^{(\text{Year} - \text{Base Year})}}.$$

The constant dollar levelized cost of power has been used to rank the power generation alternatives.

Computer Model

The revenue requirements computer model used to generate the financial statements has been used for several similar projects and incorporates requirements imposed by lending institutions and project sponsors.

Financial statements have been considered for both Distillate and Bunker C oil-fired alternatives as follows:

- Data and Assumptions
- Sources and Uses of Cash During Construction
- Cash Flow During Operations
- Constant Dollar Cash Flow (During Operations)
- Summary of Costs/Benefits

5.3 RESULTS OF THE EVALUATION

Five cases were evaluated with results as follows:

Case	Bunker C Constant $ Cents/kWh	Distillate Constant $ Cents/kWh
Gas Turbine Conversion at Bataan	3.01	3.64
New 300 MW at Bataan	3.39	4.10
Malaya 2, Case 2 Repowering	3.55	4.73
Malaya 2, Case 1 Repowering	3.74	4.64
Sucat 4 Repowering	4.08	4.98

The levelized costs were calculated at a 12% nominal discount rate (approximately 7% real discount rate). Table 5.3.1 summarizes the results of the evaluation at nominal discount rates of 9%, 12% and 15%.

TABLE 5.3.1

CONSTANT DOLLAR LEVELIZED POWER PRICE

	Discount Rate %		
	9	12	15
Bunker C Oil Fired			
Convert Gas Turbines	2.93	3.01	3.08
New 300 MW	3.29	3.39	3.48
Malaya 2, Case 2	3.46	3.55	3.65
Malaya 2, Case 1	3.65	3.74	3.83
Sucat 4	4.02	4.08	4.14
Distillate Oil Fired			
Convert Gas Turbines	3.56	3.64	3.71
New 300 MW	4.00	4.10	4.18
Malaya 2, Case 1	4.56	4.64	4.72
Malaya 2, Case 2	4.64	4.73	4.82
Sucat 4	4.93	4.98	5.03

The current evaluation ranked the options without reference to the current cost of power generation. Depending on the need for power and the alternatives for securing additional generation, options in addition to the least cost alternative may be justified.

With the exception of the Malaya 2, Case 2 Repowering, the Bunker C fuel options are approximately 18% less expensive than the corresponding Distillate Fuel alternative. This is due to the approximately 25% cost premium for distillate and to fuel comprising about 80% of the life cycle cost in a gas/oil fired plant (see Figure 5.3.1). The Malaya 2, Case 2 Repowering has been configured to provide maximum boiler fuel savings at the expense of increased gas turbine fuel consumption/kWh. Therefore, it is more sensitive to swings in gas turbine fuel type and price. The Bunker C fuel option is approximately 25% less expensive than the distillate fuel option in the Malaya 2, Case 2 configuration.

In general, the ranking of alternatives is independent of fuel type (assuming all alternatives are evaluated using the same fuel). However, in the Malaya 2 Case 2 project, the distillate and Bunker C oil-fired options are not identically ranked. As previously mentioned, the Malaya 2, Case 2 project is more sensitive to fuel pricing assumptions than the other options. This is readily apparent by comparing the components of the levelized power price:

Case	Component	Levelized cents/kWh
Distillate		
Malaya 2, Case 1	Capital	0.63
	O&M	0.07
	Fuel	3.94
Malaya 2, Case 2	Capital	0.69
	O&M	0.09
	Fuel	3.96

Figure 5.3.1

NPC SCREENING STUDY
COMPONENTS OF LEVELIZED COST*

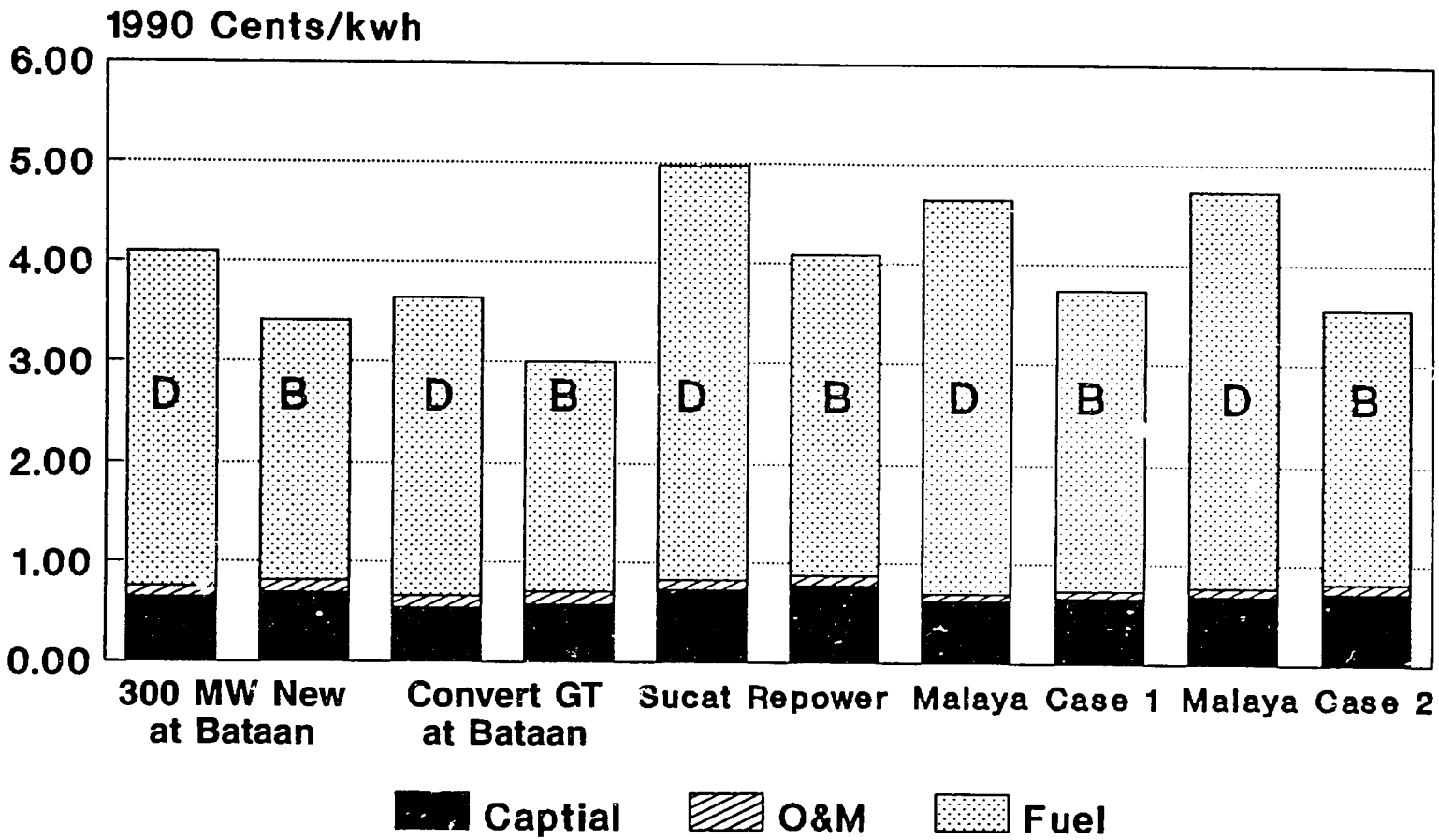

* D = Distillate; B = Bunker C

Case	Component	Levelized cents/kWh
Bunker C		
Malaya 2, Case 1		
	Capital	0.67
	O&M	0.07
	Fuel	2.99
Malaya 2, Case 2		
	Capital	0.73
	O&M	0.09
	Fuel	2.73

5.4 SENSITIVITY ANALYSES

A sensitivity analysis was performed to assess the impact on the constant dollar levelized power price of changes in key assumptions. Sensitivity analyses were done for both distillate and Bunker C options for the five alternative cases.

The following variables were tested in the sensitivity analysis:

- Capital Cost
- Fuel Cost
- Operations and Maintenance Cost
- Capacity Factor

The results of the sensitivity analysis, ranked in descending order of their effect on the levelized constant dollar power price are:

- Fuel Cost
- Capacity Factor
- Capital Cost
- Operations and Maintenance Cost

Implications include the following:

- In general, the projects can justify a 5% capital cost increase if it achieves a 1% fuel use savings (distillate fired). The advantage of fuel cost savings is somewhat less for Bunker C fired projects.

- Additional Operations and Maintenance expenditures are justified if they result in higher capacity factors and/or improved plant efficiency.

- Since fuel costs comprise approximately 80% of plant life cycle costs it is important to minimize fuel cost increase exposure (this is less an issue if the plants are run in a peaking mode).

The results of the sensitivity analyses are presented in Figures 5.3.2 to 5.3.11.

5.5 FINANCING OPTIONS

Once a determination of the least cost approach to supplying additional generation capacity has been determined the question becomes one of obtaining the most attractive financing package. The nature of the financing will depend on whether the project is envisaged as a private sector project or as a public (NPC owned) project. (Options calling for the modification of an existing plant will probably not be suitable candidates for privatization, unless the whole asset can be privatized.)

Implications of the private sector option include:

- Precludes use of soft credit financing (since there is no sovereign borrower).

- Financing is generally comprised of: export credits; commercial bank lending; and equity.

Figure 5.3.2

NPC SCREENING STUDY
BATAAN NEW 300 MW COMBINED CYCLE PLANT
DISTILLATE FIRED

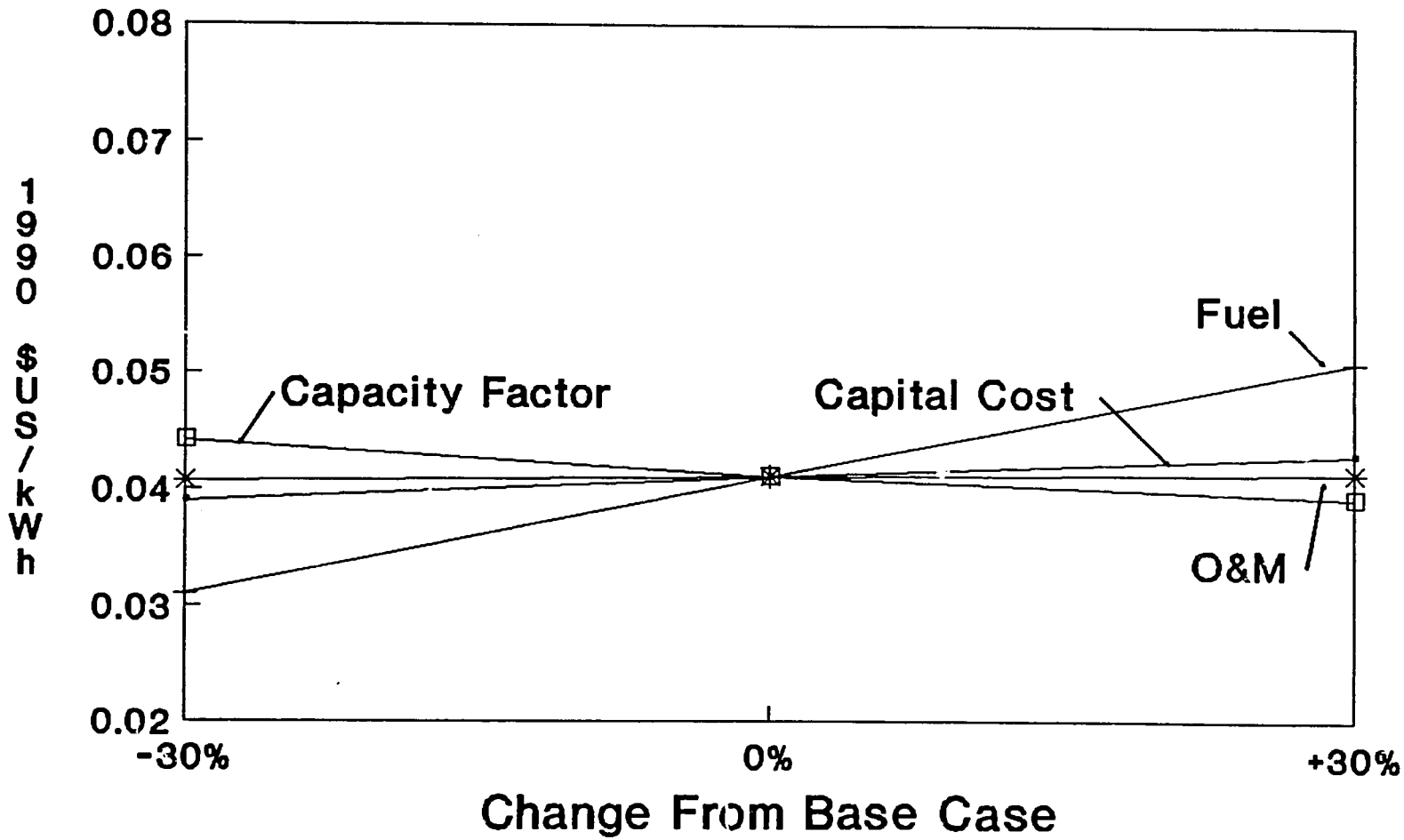

Figure 5.3.3

NPC SCREENING STUDY
BATAAN NEW 300 MW COMBINED CYCLE PLANT
BUNKER C FIRED

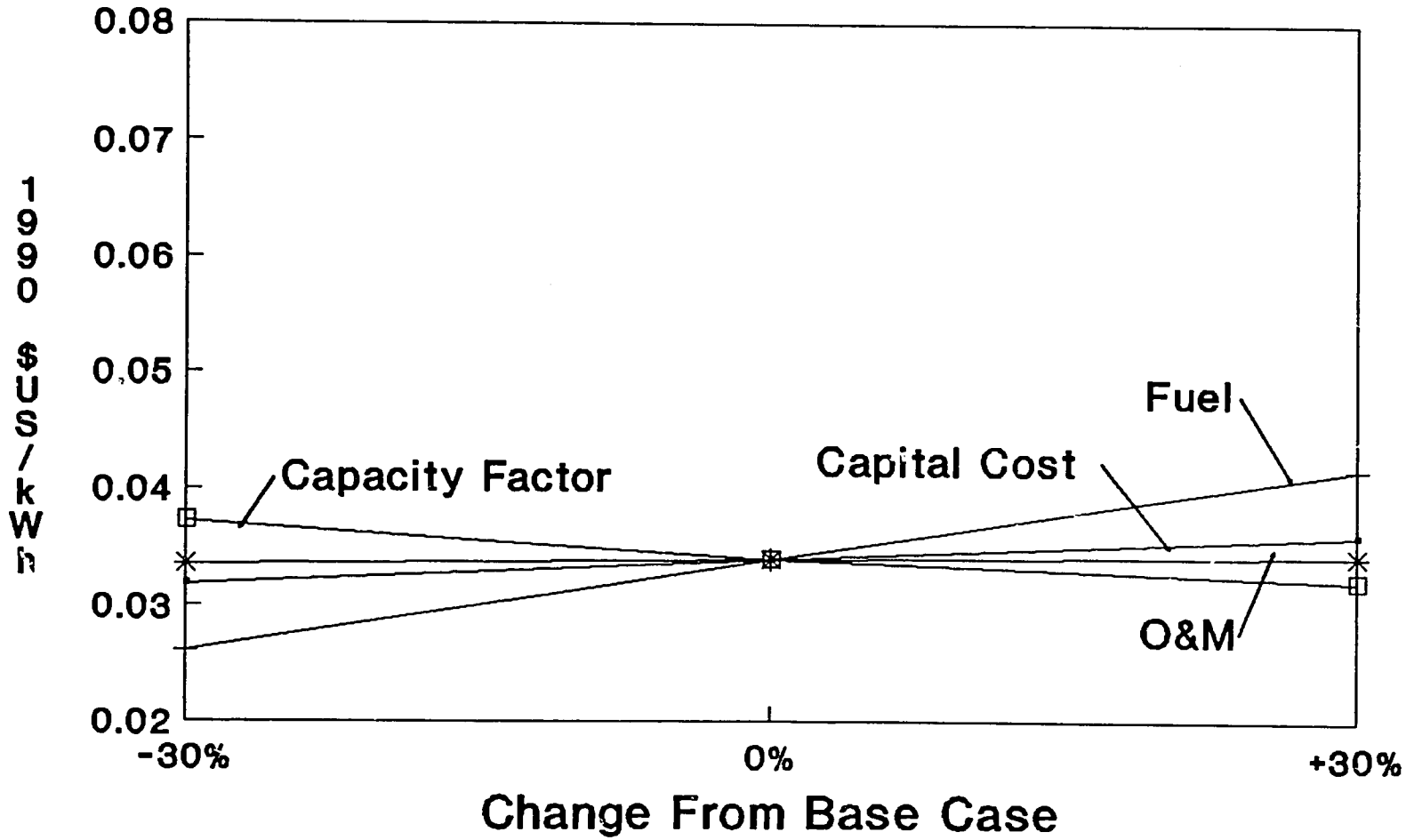

Figure 5.3.4

NPC SCREENING STUDY
CONVERSION OF EXISTING GT AT BATAAN
DISTILLATE FIRED

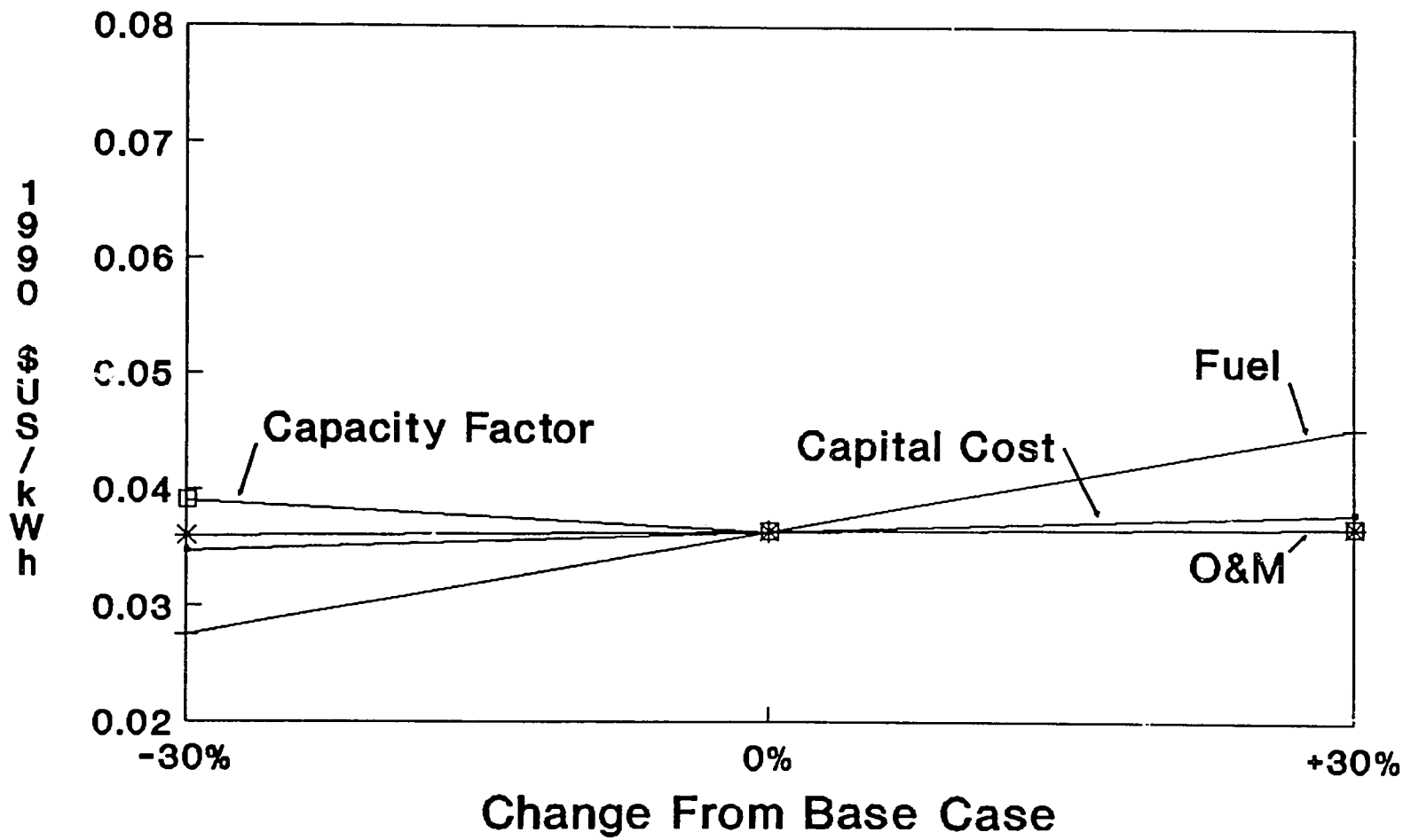

Figure 5.3.5

NPC SCREENING STUDY
CONVERSION OF EXISTING GT AT BATAAN
BUNKER C FIRED

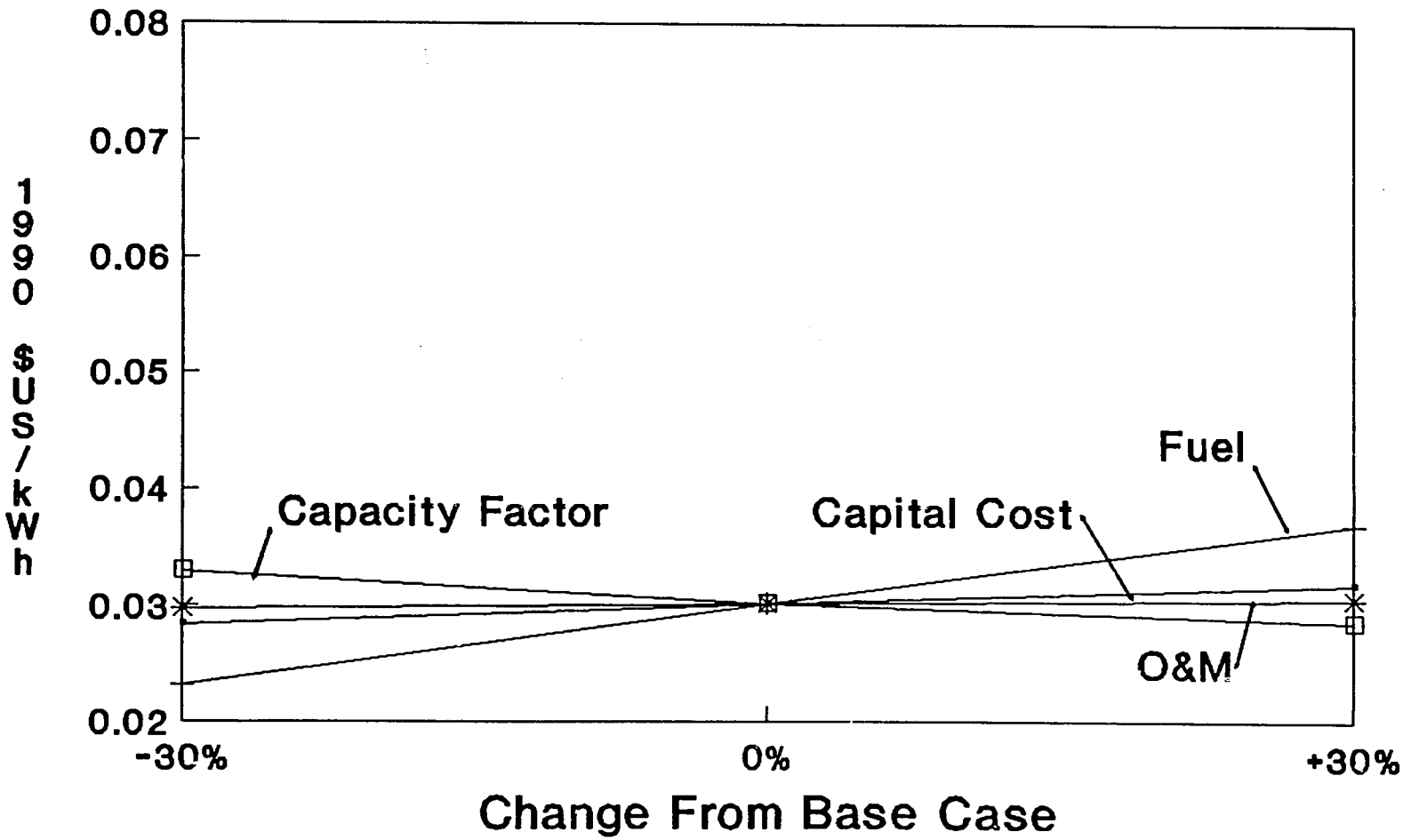

Figure 5.3.6

NPC SCREENING STUDY
MALAYA 2, CASE 1 REPOWERING
DISTILLATE FIRED

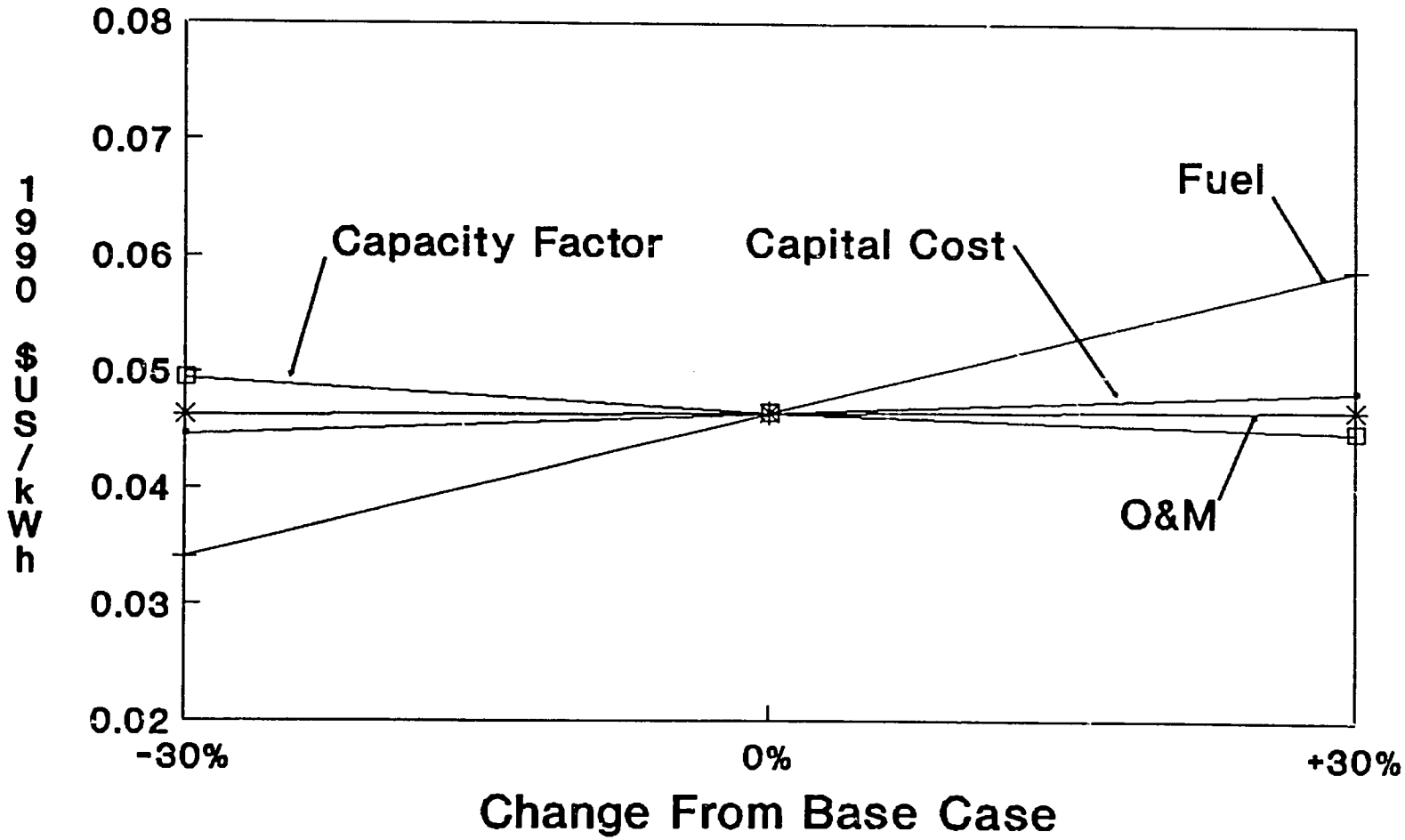

Figure 5.3.7

NPC SCREENING STUDY
MALAYA 2, CASE 1 REPOWERING
BUNKER C FIRED

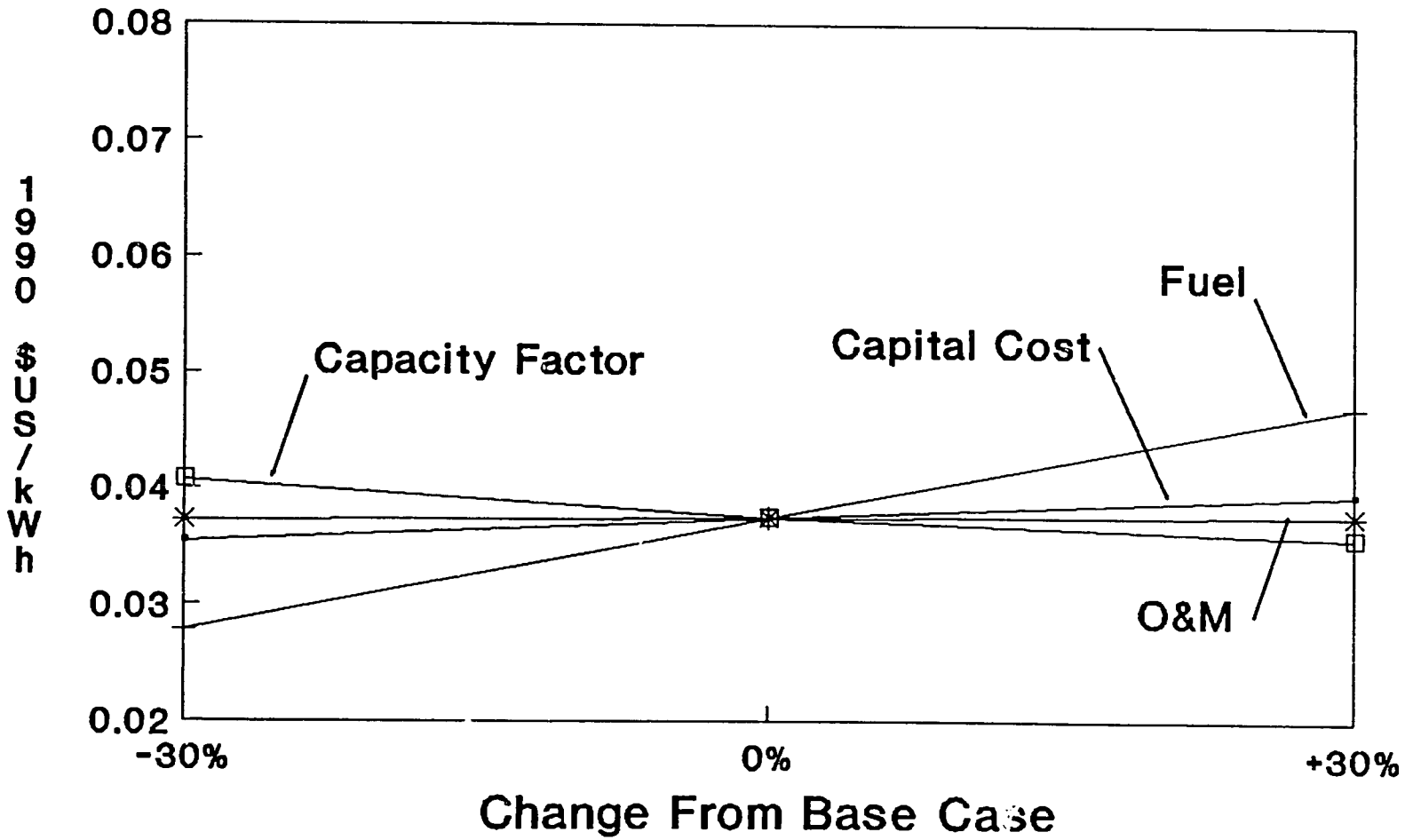

Figure 5.3.8

NPC SCREENING STUDY
MALAYA 2, CASE 2 REPOWERING
DISTILLATE FIRED

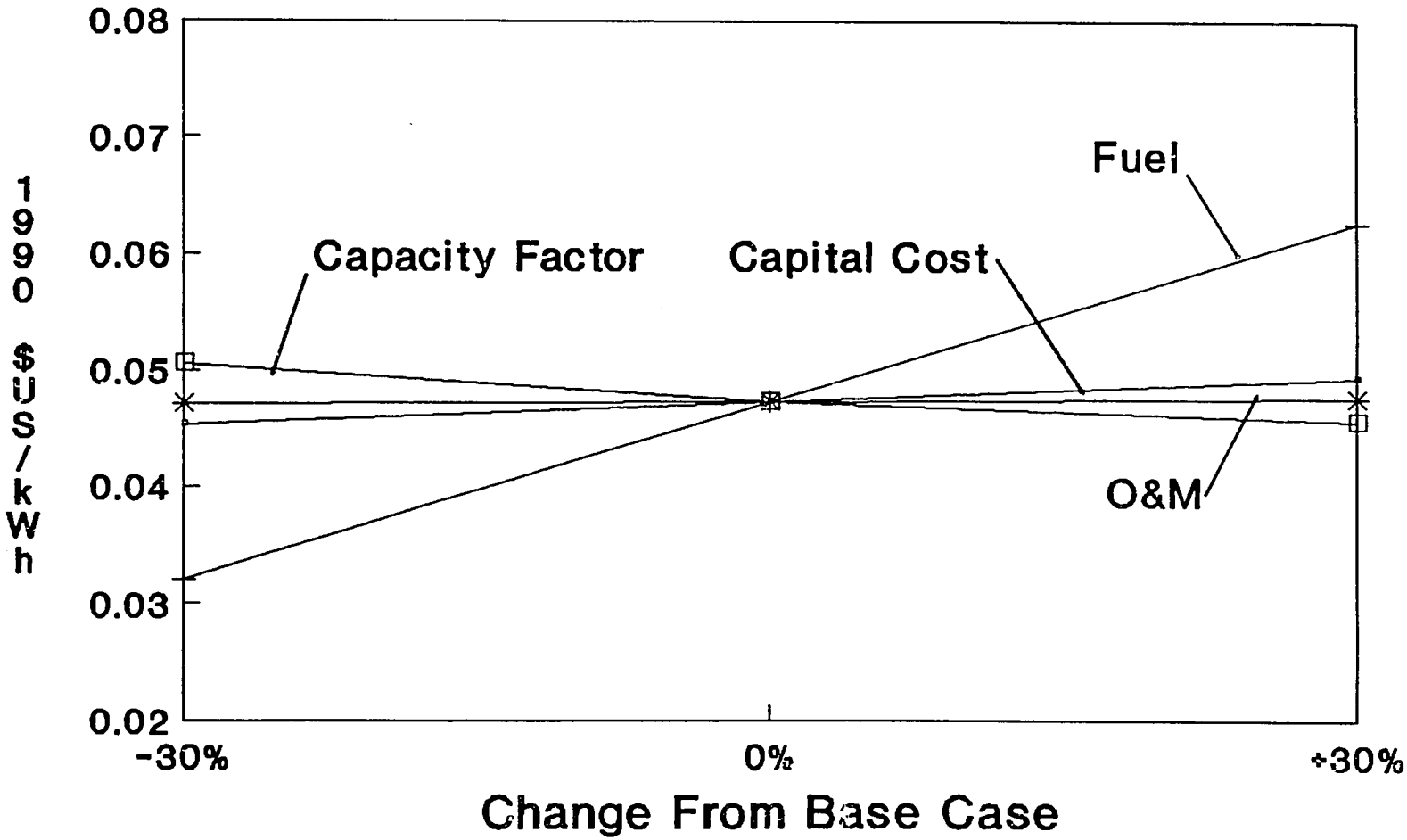

Figure 5.3.9

NPC SCREENING STUDY
MALAYA 2, CASE 2 REPOWERING
BUNKER C FIRED

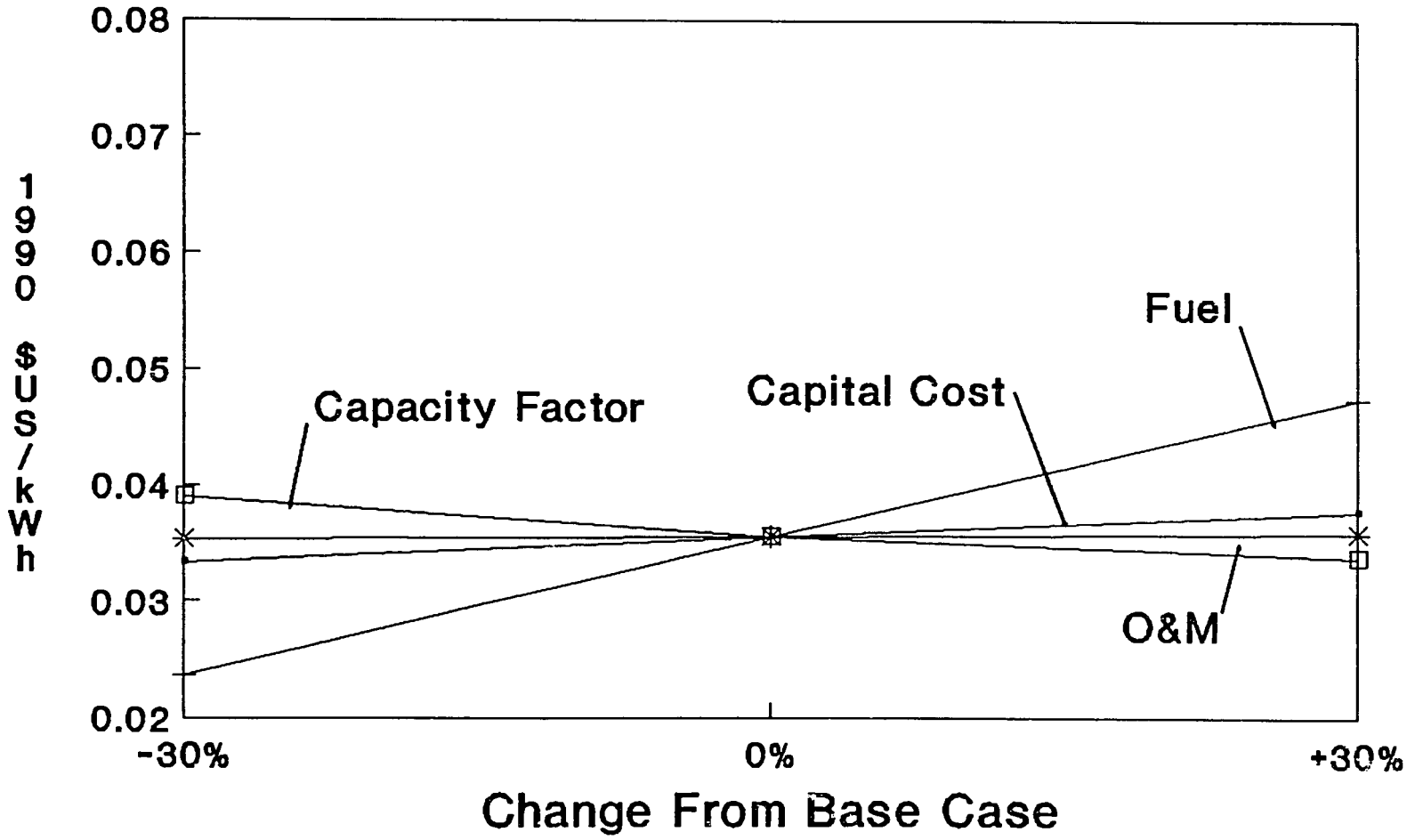

Figure 5.3.10

NPC SCREENING STUDY
SUCAT REPOWERING
DISTILLATE FIRED

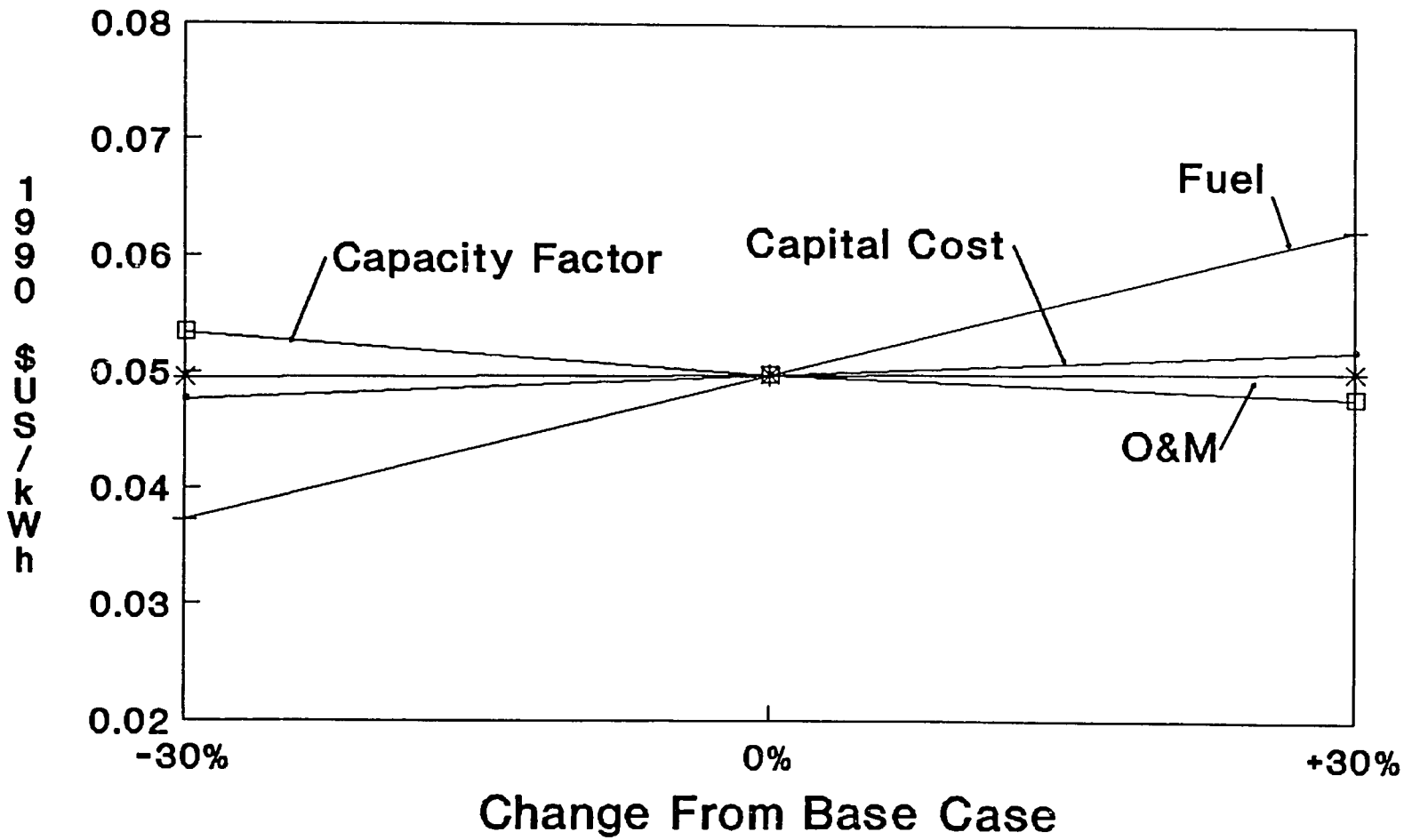

Figure 5.3.11

NPC SCREENING STUDY
SUCAT REPOWERING
BUNKER C FIRED

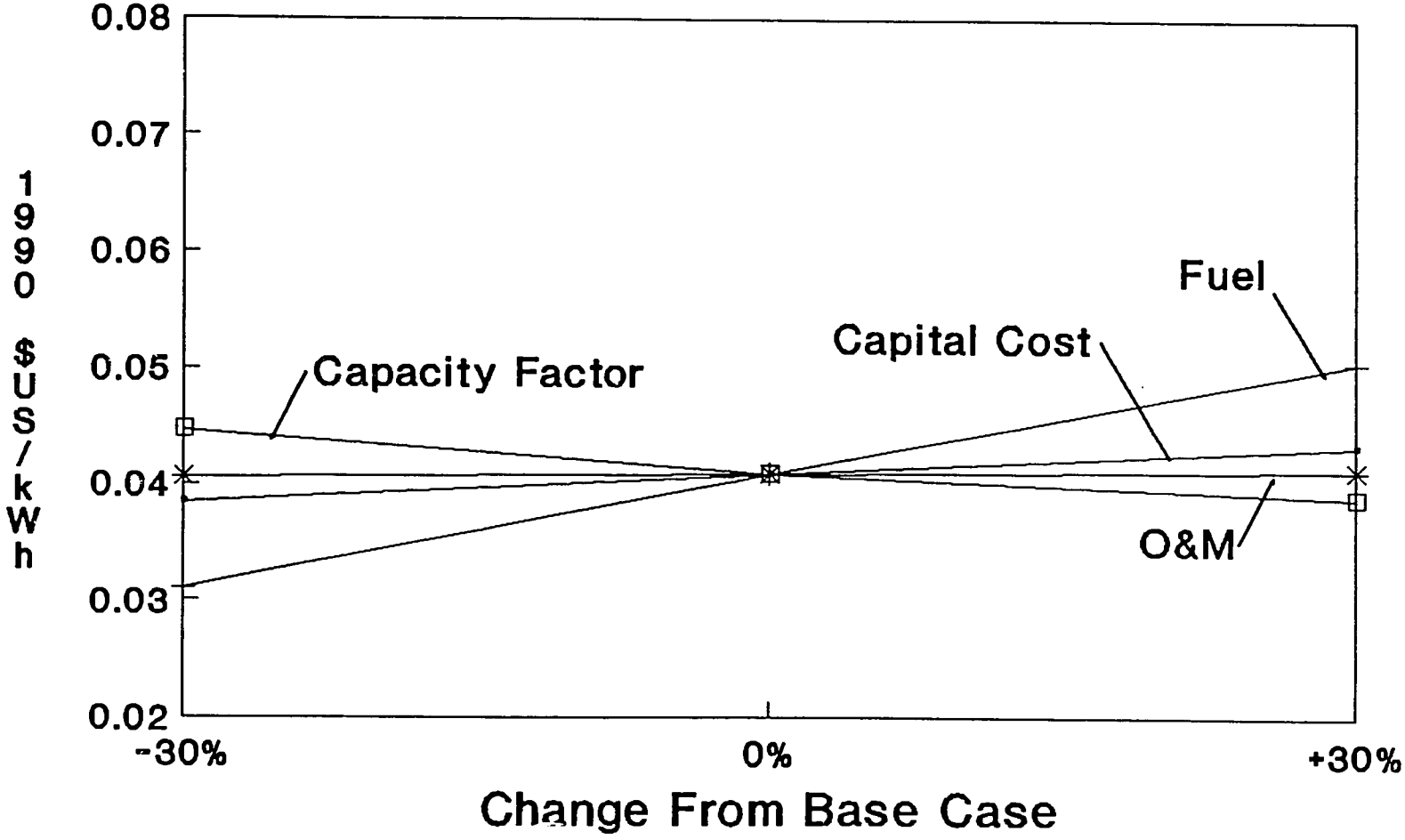

- Debt financing is generally more expensive and may be of shorter tenor as debt is generally secured on a project credit basis (limited sovereign credit support).

- Equity financing will be more expensive than a similar amount of debt financing.

- Attracts additional investment funds to Philippines which otherwise might not be available.

- May effectively transfer risk from NPC to private sector.

- Borrowings will not be officially reported as sovereign borrowings (although some form of indirect sovereign credit support may be required).

A private sector approach will generally result in higher life cycle costs than a similar NPC owned project. However, a private sector approach may be desirable for a number of reasons including:

- If it can be argued that the plant will be operated more efficiently and at a higher capacity factor in the private sector (in which case the cost per kilowatt-hour may be less than for the NPC owned case).

- If the project is structured so as not to absorb sovereign borrowing capacity and this borrowing capacity is used effectively elsewhere.

The results of this analysis have assumed a standard mix of export credit and commercial bank financing. While the ranking of the options will not vary with the assumed financing plan and commercial structure, the value of the levelized tariff will. Since the capital cost portion of the tariff accounts for only about 15% - 20% of the levelized tariff, changes in the financing plan have a minimal impact on the levelized cost.

5.6 CONCLUSIONS

The gas turbine conversion to combined cycle at Bataan represents the least cost approach to providing additional generation capacity for NPC under a reasonable range of project assumptions. However, the other options may represent attractive alternatives for providing new generation depending on the need for power, resource diversification requirements, and other alternatives for securing new generation.

SECTION 6 - CONCLUSIONS AND RECOMMENDATIONS

SECTION 6 - CONCLUSIONS AND RECOMMENDATIONS

6.0 SUMMARY

This screening study covers five alternatives A through E for combined cycle power plant and repowering existing oil fired steam power plants in the Luzon grid. Estimated plant performances, installed costs of new equipment, constant dollar levelized cost of electricity generation and schedule for commercial operation for these alternatives are summarized in Table 6.1. The data summarized in Table 6.1 are for incremental plant generating capacity and do not include existing plant generating capacity.

6.1 CONCLUSIONS

The advantages and disadvantages of the five alternatives for combined cycle power plant and existing plant repowering are summarized in the following sections. The Alternative with the lowest levelized cost of electricity generation (with treated Bunker C oil firing) is listed first and the Alternative with the highest levelized cost of electricity generation is listed last.

Alternative B. Conversion of existing gas turbines at Bataan from simple cycle to combined cycle mode of operation.

The advantages are:

- Lowest cost of electricity generation.
- Increase of gas turbine plant capacity factor from current 25% to about 75%.
- Part of the existing plant facilities and personnel can be used for combined cycle power plant operation and maintenance.

TABLE 6.1

SUMMARY OF PERFORMANCES, COSTS AND SCHEDULES

Alternatives	A	B	C	D	E
Description	New Comb. Cycle Plant at Bataan	Convert GTs at Bataan	Malaya #2 Case 1	Malaya #2 Case 2	Sucat #4
1. Increase in plant output, MW (see Note 1)	335.7 (315.6)	65.7 (61.8)	91 (85.5)	72 (67.7)	86.5 (81.3)
2. Increase in annual electricity generation @ 75% Capacity Factor, kWhr x 10^6 (see Note 1)	2205.6 (2073.3)	1014.2 (953.5)	597.9 (561.7)	473.1 (444.8)	568.3 (534.1)
3. Increase in annual fuel consumption, Btu x 10^6 (see Note 1)	17044 (16342)	6975 (6687.6)	5686 (5451.7)	5556.1 (5327.2)	5424.3 (5200.8)
4. Decrease in annual heat input to boiler, Btu x 10^6	NA	NA	426.4	1947.8	137.8
5. Installed cost of new equipment & materials Dollars x 10^6 (see Note 2)	168	63	43	37	43
Dollars/kW	500	959	473	514	497
6. Levelized cost of increased electricity generation, cents/kWhr (see Note 1)					
a. At 9% discount rate	4.00 (3.24)	3.56 (2.93)	4.56 (3.65)	4.64 (3.46)	4.93 (4.02)
b. At 12% discount rate	4.10 (3.39)	3.64 (3.01)	4.64 (3.74)	4.73 (3.55)	4.98 (4.08)
c. At 15% discount rate	4.18 (3.48)	3.71 (3.08)	4.72 (3.83)	4.82 (3.65)	5.03 (4.14)
7. Time requried to generate power in simple cycle after award of GT contract, months	19 (1st Gt)	NA	19	19	19
8. Time required to generate power in combined cycle after award of GT contract, months	24	23	20	20	21

Notes: 1. Numbers in parenthesis are with treated Bunker C oil firing
2. Excludes initial spare parts

- Existing equipment is practically new and suitable for combined cycle conversion.

- Fuel can be transported by pipeline from the refinery.

- Technical risks associated with the conversion of the existing gas turbines to combined cycle are relatively low.

The disadvantages are:

- Highest installed cost per kW.

- Congested plant area. Need to acquire additional land for locating new equipment required for combined cycle conversion.

- Transmission line capacity addition may be needed.

Alternative A. New 300 MW nominal capacity combined cycle plant at Bataan.

The advantages are:

- Cost of electricity generation lower than Alternatives C, D, and E. The study is based on using three G.E.Frame 7 gas turbines. The cost of electricity is expected to be lower if two larger gas turbines are used instead of three.

- Installed cost per kW is relatively low.

- Permits large capacity addition to the grid in a relatively short period of time without being hindered by the operating and maintenance requirements or problems of the existing plant and equipment and limited available land area within the plant.

- Allows flexibility in the design of the plant to achieve maximum efficiency.

- Allows a single contractor to assume complete responsibility for the overall performance of the plant.

- Fuel can be transported by pipeline from the refinery.

- Process steam, if required by the refinery, can be supplied from the plant. This may make this a cogeneration plant.

- Technical risks associated with this project are very low as there are no existing equipment and all equipment are new.

The disadvantages are:

- Lack of transmission line capacity.

- Requires a new steam turbine generator.

- Requires completely new plant facilities and operating personnel.

Alternative D. Repowering Malaya Unit 2 as described in case 2.

The advantages are:

- Cost of electricity lower than for Alternative C and E.

- Reduces oil consumption of the existing oil fired plant partly because of repowering and partly because of steam turbine steam path modifications.

- Can use existing plant personnel and facilities for the operation.

- Requires no new steam turbine generator and auxiliaries.

- The existing transmission line capability appears to be adequate.

The disadvantages are:

- No increase in the continuous capability of the existing steam turbine generator. In combined cycle configuration, in a new plant, the steam turbine generator continuous capability will be about 38MW with F7EA gas turbine.

- Cost of electricity generation depends upon the type of fuel. With distillate fuel firing, Alternative C is preferred over this alternative.

- Installed cost per kW is higher than for Alternative A.

- Lack of land area within the plant will result in a crowded plant layout.

- The new gas turbine operation is dependent on the operating and maintenance requirements and the condition of the existing equipment. Retirement of the existing unit will leave the gas turbine in simple cycle operation.

- The existing boiler and steam turbine steam path requires significant modification at considerable cost and will require prolonged unit shut-down for repowering. The cost and duration for this are yet to be defined by the manufacturer. These costs are likely to be higher than the estimated allowance used for the study.

- Contractors other than Hitachi may not be able to assume responsibility for the overall performance of the total plant after repowering.

- Has high degree of risk because of the modifications required for the existing plant and equipment.

Alternative C. Repowering Malaya Unit 2 as described in Case 1

The advantages are:

- Cost of electricity generation lower than Alternative E.
- Installed cost per kW lower than Alternative A.
- Can share the existing maintenance facilities and operating personnel.
- Requires no new steam turbine generator and associated auxiliaries.
- Transmission line capability appears to exist.

The disadvantages are:

- New gas turbine generator combined cycle operation is dependent upon the operation and condition of the existing equipment.
- Significant modifications are required to the existing equipment such as boiler reheater replacement, cold and hot reheat pipe replacement and steam turbine steam path modification. The exact modifications required and the cost and schedule for these modifications are yet to be determined by the manufacturer. These costs could be higher than the costs allowed in this study.
- About 3 to 4 month shutdown of the existing plant will be required for modification to the existing equipment and systems.
- A crowded plant layout is likely.

170

- Increase in the existing steam turbine continuous capability is limited to about 20 MW compared to the steam turbine continuous capability of about 39 MW achievable if the same gas turbine is used in combined cycle configuration in a new plant.

- A single contractor other than Hitachi may not be able to assume full responsibility for the overall performance of the total plant after repowering.

- Has relatively higher level of technical risk because of the significant modifications to the existing equipment and systems required. This may also prolong the duration of unit shutdown for repowering.

Alternative E. Repowering Sucat Unit 4

The advantages are:

- Can share the existing maintenance facility and operating personnel.

- Requires no new steam turbine generator and associated auxiliaries.

The disadvantages are:

- Cost of electricity generation is higher than for other alternatives.

- Installed cost per kW is practically as high as for Alternative A.

- Steam turbine generator and boiler may require modifications as in the case of Malaya Unit 2 repowering. These are yet to be defined by the manufacturer. The cost of these modifications could be higher than what is allowed in this study.

121

- Increase in the existing steam turbine continuous capability is limited to about 18 MW compared to the steam turbine continuous capability of about 37 MW achievable if the same gas turbines are used in combined cycle configuration in a new plant.

- Plant layout will be very crowded.

- The gas turbine operation is dependent upon the operation and maintenance requirements and condition of the existing old oil fired unit. If the existing unit is retired, or taken out of service, the gas turbines will have to operate in simple cycle.

- Difficult for a single contractor to assume responsibility for the overall performance of the total plant after repowering since boiler, steam turbine generator and gas turbines will be by different suppliers.

- Has relatively high degree of technical risk and the modifications required to the existing boiler, steam turbine and steam systems are yet to be defined by the manufacturers of these equipment.

- Lacks transmission line capability.

6.2 RECOMMENDATIONS

Based on the foregoing advantages and disadvantages of the alternatives considered, the following actions are recommended:

- Perform preliminary engineering for Alternatives A and B in order to further develop these projects. These projects show low cost of electricity generation and have low technical risks.

  Alternative A allows large capacity additions to the Luzon grid in a short period of time and uses very efficient heat cycle. A phased construction

approach will allow NPC to use the gas turbine power immediately after installation of the gas turbines.

- This screening study shows that Malaya #2 and Sucat #4 repowering Alternatives have cost of electricity generation higher than that of Alternatives A and B and are associated with higher technical risks because of the modifications required for the existing equipment and systems. Therefore, these repowering projects require additional detailed study before they can be considered as viable projects.

- If NPC desires to consider the repowering projects further, it is recommended that NPC request the manufacturers of the existing boilers and steam turbine generators to examine their present conditions, define the changes needed for repowering and to provide quotes for making these changes. Only after receiving such information, can the NPC review the impact of the changes on the existing plant, equipment and systems, reevaluate the technical risks of the projects and develop reliable estimates for electricity generation cost.

APPENDIXES

Appendix A

DESIGN CRITERIA

	Bataan	Malaya	Sucat
Site Conditions			
- Elevation above mean sea level, m	12	13	13
- Ambient air temperature, °C			
Dry bulb temperature:			
Maximum	37	35	35
Minimum	22	20	20
Design	32	32	32
Annual Average	27	27	27
- Relative humidity, percent			
Design	80	80	80
Annual Average	74	77	77
- Annual rainfall, mm	2075	2415	2415
- Maximum wind velocity, KM/HR	150	150	150
- Condenser cooling water temperature, °C	32	29.5	29.5
Atmospheric Emission Limits			
- Sulfur dioxide (SO_2), mg/scm	1500	1500	1500
- Nitrous oxide (NO_x), g/scm	2	2	2
- Particulates, mg/scm	300	300	300
Noise @ 100 m from Source (DBA)	60	60	60
Liquid Effluents Limits	Should meet NPCC Standards		
Fuel	Distillate Oil	Distillate Oil	Distillate Oil
Condenser Cooling Water Source	Sea	Lake	Lake
Makeup Water Source	Deepwell	Deepwell	Deepwell
System Voltage Levels			
- Generation	13.8 KV	13.8 KV	13.8 KV
- Transmission	230 KV	230 KV	115 KV

APPENDIX B

MAJOR EQUIPMENT LIST

NEW COMBINED CYCLE POWER PLANT AT BATAAN

QUANTITY	EQUIPMENT TITLE	EQUIPMENT SIZE AND DESCRIPTION
3	Gas Turbine Generator	GE Model 7111EA Rated at 74.2 MW at site conditions
1	Steam Turbine	Dual admission, condensing type H.P. throttle conditions: 1465 psia, 950°F, 744,000 lbs/hr. L.P. throttle conditions: 100 psia, 328°F, 137,160 lbs/hr Generator output 115 MW
3	Heat Recovery Steam Generator	Unfired, dual pressure, natural circulation type H.P. steam conditions: 258,000 lbs/hr @ 1500 psia and 955°F L.P. steam conditions: 81,240 lbs/hr @ 103 psia and 330°F Gas turbine exhaust conditions: Flow - 2,232,000 lbs/hr, Temperature - 1004 °F Analysis N_2 = 75.4%, O_2 - 13.9%, CO_2 = 4.11%, H_2O = 6.59% Stack gas temperature = 300°F Feedwater temperature = 220°F
1	Deaerator	Tray type Condensate flow = 918,000 lbs/hr @ 104°F Feedwater flow = 1,025,000 lbs/hr @ 220°F Steam flow = 106,920 lbs/hr @ 328°F
1	Condenser	Suitable for sea water cooling Water flow - 140,000 gpm Steam flow = 910,800 lb/hr Duty = 824 x 10^6 BTU/hr
2	Condensate Pumps	Each 100% capacity; 1900 gpm @ 150 ft
2	Circulating Water	Each 50% capacity; 70,000 gpm @ 60 ft
2	Vacuum Pumps	Each 100% capacity

126

Appendix B (Continued)

QUANTITY	EQUIPMENT TITLE	EQUIPMENT SIZE AND DESCRIPTION
4	L.P. Feed Pumps	Each 100% capacity; 200 gpm @ 300 ft
4	H.P. Feed Pumps	Each 100% capacity; 600 gpm @ 4000 ft
1	Demineralizer	Dual train type Rated capacity 60 gpm
1	Waste Water System	Collect all plant waste water and treat before disposal
1	Chemical Feed System	Consists of chemical tanks and pumps
2	Well Water	Each 100% capacity; 100 gpm @ 200 ft
2	Service Water Pumps	Each 100% capacity; 9000 gpm @ 30 ft
2	Demineralizer Water Pumps	Each 100% capacity; 60 gpm @ 30 ft
1	Raw Water Storage Tank	140,000 gallon capacity
1	Condensate Storage Tank	30,000 gallon capacity
2	Raw Water Pumps	Each 100% capacity; 100 gpm @ 30 ft
2	Distillate Oil Storage Tanks	Each 1,500,000 gallons
2	Distillate Oil Transfer Pumps	Each 100% capacity, 310 gpm @ 50 psig
1	Boiler Blowdown Tank	One for 3 HRSGs
1	Compressed Air System	Consists of four compressors each 200 scfm @ 125 psig

121

Appendix B (Continued)

QUANTITY	EQUIPMENT TITLE	EQUIPMENT SIZE AND DESCRIPTION
1	Lube Oil Storage Tank	15,000 gallon capacity
1	Control System	One DCS system for three units
1	Main Transformer	150 MVA, OA, 55°C, 230-13.8 KV, 3PH, 60 Hz, 16% Z, ± 2-2½% taps
3	Main Transformer	100 MVA, OA, 55°C, 230-13.8 KV, 3PH, 60 Hz, 12% Z, ± 2-2½% taps
9	High Voltage Circuit Breakers	2000 A, 50 KA, 3PH, 60 Hz, SF6, Electrically operated, outdoor type CB with CTS
18	High Voltage Disconnect Switches	1200 A, 61KA, 900 BIL, manually operated 3PH, 60 Hz, outdoor disconnect switches
	Auxiliary Power 15 KV Switchgear	Outdoor walk-in NEMA 3R, 1200A, 38 KA, bus, 13.8 KV, 3PH, 60 Hz, metal clad switchgear with 3 - 1200A, 1000 MVA, CB with CTS, PT and Relays
4	Auxiliary Power Transformers	1.5 MVA, OA/FA, 55/65°C, 13800 - 480V, 3PH, 60 Hz, ± 2-2½% taps
4	Auxiliary Power 600V Switchgear	Outdoor walk-in NEMA 3R metal enclosed switchgear rated for 480V, 3PH, 60 Hz with 2500A, 50 KA, CU bus and following 1 - 1600A, main CB with SST 2 - 1600A, feeder CB with SST
5	600V MCC	Outdoor walk-in NEMA 3R MCC rated for 480V, 3PH, 60 Hz, with 1200A, 50 KA CU bus including main CB, feeder CB, and motor starters

128

Appendix B (Continued)

QUANTITY	EQUIPMENT TITLE	EQUIPMENT SIZE AND DESCRIPTION
1	6 KV Switchgear and Motor Starters	Outdoor walk-in NEMA 3R, 1200A, 29 KA, CU bus 4.16 KV, 3PH, 60 Hz, metal clad switchgear 3 - 1200A CB 7 - 400A NEMA E2 starters
2	Auxiliary Power Transformer	7.5 MVA OA/FA, 55/65°C, 13,800 - 4, 160 V, 3PH, 60 Hz, ± 2-2½% taps

134

APPENDIX C

MAJOR EQUIPMENT LIST

CONVERSION OF EXISTING GAS TURBINES TO COMBINED CYCLE PLANT AT BATAAN

QUANTITY	EQUIPMENT TITLE	EQUIPMENT SIZE AND DESCRIPTION
4	Gas Turbine Generator	Alsthom Model PG6531 Rated at 32 MW at site conditions
1	Steam Turbine	Dual admission, condensing type H.P. throttle conditions: 1465 psia, 950°F, 468,000 lbs/hr. L.P. throttle conditions: 100 psia, 328°F, 85,680 lbs/hr Generator output 70 MW
4	Heat Recovery Steam Generator	Unfired, dual pressure, natural circulation type H.P. steam conditions: 117,000 lbs/hr @ 1500 psia and 955°F L.P. steam conditions: 39,600 lbs/hr @ 103 psia and 330°F Stack gas temperature = 300°F Feedwater temperature = 220°F
1	Deaerator	Tray type Condensate flow = 562,000 lbs/hr @ 104°F Feedwater flow = 626,400 lbs/hr @ 220°F Steam flow = 64,400 lbs/hr @ 328°F
1	Condenser	Suitable for sea water cooling Water flow - 86,000 gpm Steam flow = 561,600 lb/hr Duty = 510 x 10^6 BTU/hr
2	Condensate Pumps	Each 100% capacity; 1150 gpm @ 150 ft
2	Circulating Water	Each 50% capacity; 43,000 gpm @ 60 ft
2	Vacuum Pumps	Each 100% capacity
3	L.P. Feed Pumps	300 gpm @ 300 ft (two operating and one spare)

130

Appendix C (Continued)

QUANTITY	EQUIPMENT TITLE	EQUIPMENT SIZE AND DESCRIPTION
3	H.P. Feed Pumps	1100 gpm @ 4000 ft (two operating and one spare)
1	Demineralizer	Dual train type Rated capacity 40 gpm
1	Waste Water System	Collect all plant waste water and treat before disposal
1	Chemical Feed System	Consists of chemical tanks and pumps
2	Well Water	Each 100% capacity; 65 gpm @ 200 ft
2	Service Water Pumps	Each 100% capacity; 6000 gpm @ 30 ft
2	Demineralizer Water Pumps	Each 100% capacity; 40 gpm @ 30 ft
1	Raw Water Storage Tank	90,000 gallon capacity
1	Condensate Storage Tank	20,000 gallon capacity
2	Raw Water Pumps	Each 100% capacity; 60 gpm @ 30 ft
2	Distillate Oil Storage Tanks	Each 1,000,000 gallons
2	Distillate Oil Transfer Pumps	Each 100% capacity; 200 gpm @ 50 psig
1	Boiler Blowdown Tank	One for 4 HRSGs
1	Compressed Air System	Consists of four compressors each 200 scfm @ 125 psig
1	Lube Oil Storage Tank	15,000 gallon capacity

Appendix C (Continued)

QUANTITY	EQUIPMENT TITLE	EQUIPMENT SIZE AND DESCRIPTION
1	Control System	One DCS system for three units
1	Main Transformer	100 MVA, OA, 55°C, 230-13.8 KV, 3PH, 60 Hz, 12% Z, ± 2-2½% taps
1	High Voltage Circuit Breakers	2000 A, 50 KA, 3PH, 60 Hz, SF6, Electrically operated, outdoor type CB with CTS
2	High Voltage Disconnect Switches	1200 A, 61KA, 900 BIL, manually operated 3PH, 60 Hz, outdoor disconnect switches
1	Auxiliary Power 15 KV Switchgear	Outdoor walk-in NEMA 3R, 1200A, 38 KA, bus, 13.8 KV, 3PH, 60 Hz, metal clad switchgear with 1 - 1200A, 1000 MVA, CB with CTS, PT and Relays
2	Auxiliary Power Transformer	5 MVA, OA/FA, 55/65°C, 13,800-4160V, 3PH, 60 Hz, ± 2-2½% taps
1	Auxiliary Power Transformers	1 MVA, OA/FA, 55/65°C, 4160-480V, 3PH, 60 Hz, ± 2-2½% taps
1	Auxiliary Power 600V Switchgear	Outdoor walk-in NEMA 3R metal enclosed switchgear rated for 480V, 3PH, 60 Hz with 2500A, 50 KA, CU bus and following 1 - 1600A, main CB with SST 2 - 1600A, feed CB with SST
1	600V MCC	Outdoor walk-in NEMA 3R MCC rated for 480V, 3PH, 60 Hz, with 1200A, 50 KA CU bus including main CB, feeder CB, and motor starters
1	5 KV Switchgear and Motor Starters	Outdoor walk-in NEMA 3R, 1200A, 29 KA, CU bus 4.16 KV, 3PH, 60 Hz, metal clad switchgear 3 - 1200A CB 5 - 400A NEMA E2 contactor

APPENDIX D

MAJOR EQUIPMENT LIST

REPOWERING MALAYA UNIT 2 WITH GAS TURBINE

QUANTITY	EQUIPMENT TITLE	EQUIPMENT SIZE AND DESCRIPTION
1	Gas Turbine Generator	ABB Model GT 11N Rated at 71.8 MW at site conditions
1	Waste Heat Recovery Economizer	3500 psig design pressure Inlet feedwater conditions: 1,620,000 lbs/hr @ 3200 psia and 345°F Outlet feedwater conditions: 1,620,000 lbs/hr @ 3150 psia and 525°F Gas turbine exhaust flow conditions: Flow = 2,379,600 lbs/hr @ 983°F Gas Analysis = N_2 = 17.52%; O_2 = 14.28%; CO_2 = 3.86%; H_2O = 6.34% Minimum stack temperature: 450°F Draft loss = 8" WC
2	Service Water Pumps	Each 100% capacity, 2000 gpm @ 30 ft
2	Distillate Oil Storage Tanks	Each 500,000 gallon capacity
2	Distillate Oil Transfer Pumps	Each 100% capacity, 125 gpm @ 50 psig
1	Lube Oil Storage Tank	15,000 gallons
1	Main Transformer	100 MVA, OA, 55°C, 115-13.8 KV, 3PH, 60 Hz, 12% Z, ± 2-2½% taps
2	High Voltage Circuit Breakers	1600 A, 50 KA, 3PH, 60 Hz, SF6, Electrically operated, outdoor type CB with CTS
4	High Voltage Disconnect Switches	1200 A, 61KA, 550 BIL, manually operated 3PH, 60 Hz, outdoor disconnect switches

Appendix D (Continued)

QUANTITY	EQUIPMENT TITLE	EQUIPMENT SIZE AND DESCRIPTION
1	Auxiliary Power 15 KV Switchgear	Outdoor walk-in NEMA 3R, 1200A, 18 KA, bus, 13.8 KV, 3PH, 60 Hz, metal clad switchgear with 1 - 1200A, 500 MVA, CB with CTS, PT and Relays
1	Auxiliary Power Transformers	1 MVA, OA/FA, 55/65°C, 13800 - 480V, 3PH, 60 Hz, ± 2-2½% taps
1	Auxiliary Power 600V Switchgear	Outdoor walk-in NEMA 3R metal enclosed switchgear rate for 480V, 3PH, 60 Hz with 2500A, 50 KA, CU bus and following 1 - 1600A, main CB with SST 2 - 1600A, feeder CB with SST
1	600V MCC	Outdoor walk-in NEMA 3R MCC rated for 480V, 3PH, 60 Hz, with 1200A, 50 KA CU bus including main CB, feeder CB, and motor starters

APPENDIX E

MAJOR EQUIPMENT LIST

REPOWERING SUCAT UNIT 4 WITH GAS TURBINES

QUANTITY	EQUIPMENT TITLE	EQUIPMENT SIZE AND DESCRIPTION
2	Gas Turbine Generator	JBE Model 6541B Rated at 34.2 MW at site conditions
2	Waste Heat Recovery Economizer	3500 psig design pressure Inlet feedwater conditions: 1,136,000 lbs/hr @ 3200 psia and 345°F Outlet feedwater conditions: 1,136,000 lbs/hr @ 3150 psia and 525°F Gas turbine exhaust flow conditions: Flow = 1,054,800 lbs/hr @ 983°F Gas Analysis = N_2 = 17.4%; O_2 = 13.82%; CO_2 = 4.14%; H_2O = 6.62% Minimum stack temperature: 450°F Draft loss = 8" WC
2	Service Water Pumps	Each 100% capacity, 2000 gpm @ 30 ft
2	Distillate Oil Storage Tanks	Each 500,000 gallon capacity
2	Distillate Oil Transfer Pumps	Each 100% capacity, 125 gpm @ 50 psig
1	Lubeoil Storage Tank	15,000 gallons
1	Main Transformer	90/45/45 MVA, OA, 55°C, 115/13.8/13.8 KV, 3PH, 60 Hz, 10% Z, ± 2-2½% taps
2	High Voltage Circuit Breakers	1600 A, 50 KA, 3PH, 60 Hz, SF6, Electrically operated, outdoor type CB with CTS
4	High Voltage Disconnect Switches	1200 A, 61KA, 550 BIL, manually operated 3PH, 60 Hz, outdoor disconnect switches

Appendix E (Continued)

QUANTITY	EQUIPMENT TITLE	EQUIPMENT SIZE AND DESCRIPTION
2	Auxiliary Power 15 KV Switchgear	Outdoor walk-in NEMA 3R, 1200A, 18 KA, bus, 13.8 KV, 3PH, 60 Hz, metal clad switchgear with 1 - 1200A, 500 MVA, CB with CTS, PT and Relays
2	Auxiliary Power Transformers	1.5 MVA, OA/FA, 55/65°C, 13800 - 480V, 3PH, 60 Hz, ± 2-2½% taps
2	Auxiliary Power 600V Switchgear	Outdoor walk-in NEMA 3R metal enclosed switchgear rate for 480V, 3PH, 60 Hz with 2500A, 50 KA, CU bus and following 1 - 1600A, main CB with SST 2 - 1600A, feeder CB with SST
2	600V MCC	Outdoor walk-in NEMA 3R MCC rated for 480V, 3PH, 60 Hz, with 1200A, 50 KA CU bus including main CB, feeder CB, and motor starters

BATAAN NEW 300 MW - BUNKER C

Appendix F

NPC Screening Study
Data and Assumptions

TIMING DATA	Unit 1	Unit 2	Unit 3	Unit 4	Project
Financial Close Date					1991.00
Commercial Operation Date	1993.00	0.00	0.00	0.00	1993.00
Unit Operating Life					25.00
Base Year For Cost Estimates					1990.50

SUMMARY OF KEY RESULTS	
Line of Credit Maximum Balance	0.0
Nominal Levelized Tariff (US$/kWh)	0.0572
Constant $ Levelized Tariff (US$/kWh)	0.0339

CAPITAL COST DATA ($MM)

	1990	1991	1992	1993	1994	1995	1996	1997	Total
Unit 1									
Unesc Unit 1 EPCM Cost	0.0	114.0	54.0	0.0	0.0	0.0	0.0	0.0	168.0
Unesc Unit 1 Transmission Cost	0.0	0.0	0.0	0.0	0.0	0.0	0.0	0.0	0.0
Unesc Unit 1 Other Costs	0.0	0.0	2.0	0.0	0.0	0.0	0.0	0.0	2.0
Unesc Unit 1 Working Capital	0.0	0.0	0.0	0.0	0.0	0.0	0.0	0.0	0.0
Unit 2									
Unesc Unit 2 EPCM Cost	0.0	0.0	0.0	0.0	0.0	0.0	0.0	0.0	0.0
Unesc Unit 2 Transmission Cost	0.0	0.0	0.0	0.0	0.0	0.0	0.0	0.0	0.0
Unesc Unit 2 Other Costs	0.0	0.0	0.0	0.0	0.0	0.0	0.0	0.0	0.0
Unesc Unit 2 Working Capital	0.0	0.0	0.0	0.0	0.0	0.0	0.0	0.0	0.0
Unit 3									
Unesc Unit 3 EPCM Cost	0.0	0.0	0.0	0.0	0.0	0.0	0.0	0.0	0.0
Unesc Unit 3 Transmission Cost	0.0	0.0	0.0	0.0	0.0	0.0	0.0	0.0	0.0
Unesc Unit 3 Other Costs	0.0	0.0	0.0	0.0	0.0	0.0	0.0	0.0	0.0
Unesc Unit 3 Working Capital	0.0	0.0	0.0	0.0	0.0	0.0	0.0	0.0	0.0
Unit 4									
Unesc Unit 4 EPCM Cost	0.0	0.0	0.0	0.0	0.0	0.0	0.0	0.0	0.0
Unesc Unit 4 Transmission Cost	0.0	0.0	0.0	0.0	0.0	0.0	0.0	0.0	0.0
Unesc Unit 4 Other Costs	0.0	0.0	0.0	0.0	0.0	0.0	0.0	0.0	0.0
Unesc Unit 4 Working Capital	0.0	0.0	0.0	0.0	0.0	0.0	0.0	0.0	0.0

ENGINEERING DATA	
Distillate Oil Heat Rate (Btu/KWh, HHV)	7727.5
Bunker C Heat Rate (Btu/kWh, HHV)	7882.2
Distillate Net Output (MW)	335.7
Bunker C Net Output (MW)	315.6
Fuel Switch (1 = Distillate)	2
Transmission Losses	0.0%

OPERATING DATA	
Unit Fixed O&M (US$ MM)	1.67
Variable O&M (US$/kWh)	0.0003
Fuel	$/MMBtu
Distillate	4.31
Bunker C	3.27
Boiler Bunker C	2.80

Annual Operating Data

Input Capacity Factor	75.00%	75.00%	75.00%	75.00%	75.00%	75.00%	75.00%	75.00%
Unit Distillate Net Output	335.7	335.7	335.7	335.7	335.7	335.7	335.7	335.7
Unit Bunker Net Output	315.6	315.6	315.6	315.6	315.6	315.6	315.6	315.6
Unit Distillate Net Heat Rate	7727.5	7727.5	7727.5	7727.5	7727.5	7727.5	7727.5	7727.5
Unit Bunker Net Heat Rate	7882.2	7882.2	7882.2	7882.2	7882.2	7882.2	7882.2	7882.2
Reduced Heat Input (MMBtu, HHV)	0.0	0.0	0.0	0.0	0.0	0.0	0.0	0.0

BATAAN NEW 300 MW - BUNKER C

NPC Screening Study
Data and Assumptions

FINANCING DATA	Standby %	Financing %	Repayment (Years)	Grace Period (Op Years)	Interest Rate (% p.a.)	Commit Fee (%)	Front End Fee (%)
Soft Loan	0.00%	0.0%	15.0	10.0	1.00%	0.000%	0.000%
Export Credits	0.00%	85.0%	12.0	6 Month	10.55%	0.000%	0.000%
Commercial Debt	0.00%	15.0%	5.0	6 Month	12.00%	0.000%	0.000%
Credit Line					12.00%	0.000%	0.000%
Total		100.0%					

ECONOMIC DATA	
a) Escalation Rates	
Fuel Escalation Rate	5.0%
Tariff Escalation Rate	5.0%
O&M Escalation Rate	5.0%
Capital Cost Escalation Rate	5.0%
Tariff Premium Escalation Rate	5.0%
GDP Escalation Rate	5.0%
b) Tax Data	
Effective Tax Rate	0.0%
c) Depreciation	
Percent EPCM	75.0%
Percent Transmission	25.0%
EPCM Straight Line Life	20
Transmission Straight Line Life	30
Sensitivity Factors	
Capital Cost	1.00
Fuel Cost	1.00
O&M	1.00
Capacity Factor	1.00

d) Discount Rates	
NPC Discount Rate	12.0%

BATAAN NEW 300 MW - BUNKER C

NPC Screening Study
Sources and Uses of Cash During Construction

	1990	1991	1992	1993	1994	1995	1996	1997	Total
Sources of Cash									
Soft Loan Financing	0.0	0.0	0.0	0.0	0.0	0.0	0.0	0.0	0.0
Export Credit Financing	0.0	107.2	66.8	0.0	0.0	0.0	0.0	0.0	176.1
Commercial Debt Financing	0.0	18.9	11.8	0.0	0.0	0.0	0.0	0.0	30.7
Total	0.0	126.1	78.6	0.0	0.0	0.0	0.0	0.0	204.8
Uses of Cash									
EPCM Cost	0.0	119.7	59.5	0.0	0.0	0.0	0.0	0.0	179.2
Transmission Cost	0.0	0.0	0.0	0.0	0.0	0.0	0.0	0.0	0.0
Other Costs	0.0	0.0	2.2	0.0	0.0	0.0	0.0	0.0	2.2
Working Capital	0.0	0.0	0.0	0.0	0.0	0.0	0.0	0.0	0.0
Total Unleveraged Costs	0.0	119.7	61.7	0.0	0.0	0.0	0.0	0.0	181.4
IDC	0.0	6.4	16.9	0.0	0.0	0.0	0.0	0.0	23.4
Front End Fees	0.0	0.0	0.0	0.0	0.0	0.0	0.0	0.0	0.0
Commitment Fees	0.0	0.0	0.0	0.0	0.0	0.0	0.0	0.0	0.0
Total Uses of Cash	0.0	126.1	78.6	0.0	0.0	0.0	0.0	0.0	204.8

BATAAN NEW 300 MW - BUNKER C

NPC Screening Study
Cash Flow From Operations

	1990	1991	1992	1993	1994	1995	1996	1997	1998	1999
Operating Revenues										
Energy Sales Revenues										
Base	0.0	0.0	0.0	34.9	43.9	41.8	39.7	37.6	32.5	27.8
Fuel	0.0	0.0	0.0	61.9	65.0	68.2	71.6	75.2	79.0	82.9
Total Energy Sales Revenues	0.0	0.0	0.0	96.7	108.9	110.0	111.3	112.8	111.4	110.7
Operating Expenses										
Fuel	0.0	0.0	0.0	61.9	65.0	68.2	71.6	75.2	79.0	82.9
Less: Fuel Savings	0.0	0.0	0.0	0.0	0.0	0.0	0.0	0.0	0.0	0.0
Net Fuel	0.0	0.0	0.0	61.9	65.0	68.2	71.6	75.2	79.0	82.9
Fixed O&M Expense	0.0	0.0	0.0	1.9	2.0	2.1	2.2	2.3	2.5	2.6
Variable O&M Expense	0.0	0.0	0.0	0.8	0.9	0.9	1.0	1.0	1.1	1.1
Depreciation	0.0	0.0	0.0	9.4	9.4	9.4	9.4	9.4	9.4	9.4
Total Operating Expenses	0.0	0.0	0.0	74.0	77.3	80.7	84.2	88.0	91.9	96.0
Operating Income	0.0	0.0	0.0	22.7	31.6	29.3	27.1	24.8	19.6	14.7
Other Revenue and Expense Items										
Interest Expense	0.0	0.0	0.0	21.8	20.4	18.1	15.8	13.5	11.4	9.6
Taxable Income	0.0	0.0	0.0	0.9	11.3	11.3	11.3	11.3	8.2	5.1
Income Taxes	0.0	0.0	0.0	0.0	0.0	0.0	0.0	0.0	0.0	0.0
Net Income	0.0	0.0	0.0	0.9	11.3	11.3	11.3	11.3	8.2	5.1
Plus: Depreciation Expense	0.0	0.0	0.0	9.4	9.4	9.4	9.4	9.4	9.4	9.4
Less: Principal Repayment	0.0	0.0	0.0	10.3	20.7	20.7	20.7	20.7	17.6	14.5
Net Cash Flow Before ST Financing	0.0	0.0	0.0	0.0	0.0	0.0	0.0	0.0	0.0	0.0
Memorandum Items:										
Beginning Short Term Balance	0.0	0.0	0.0	0.0	0.0	0.0	0.0	0.0	0.0	0.0
Additions to Short Term Balance	0.0	0.0	0.0	0.0	0.0	0.0	0.0	0.0	0.0	0.0
Interest On Short Term Balance	0.0	0.0	0.0	0.0	0.0	0.0	0.0	0.0	0.0	0.0
Reductions of Short Term Balance	0.0	0.0	0.0	0.0	0.0	0.0	0.0	0.0	0.0	0.0
Ending Short Term Balance	0.0	0.0	0.0	0.0	0.0	0.0	0.0	0.0	0.0	0.0
Surplus Cash	0.0	0.0	0.0	0.0	0.0	0.0	0.0	0.0	0.0	0.0

24 Aug 1990 1:11 PM

BATAAN NEW 300 MW - BUNKER C

Appendix F (Continued)

NPC Screening Study
Cash Flow From Operations

	2000	2001	2002	2003	2004	2005	2006	2007	2008	2009
Operating Revenues										
Energy Sales Revenues										
Base	26.4	25.1	23.8	22.5	21.2	12.8	5.2	5.5	5.8	6.0
Fuel	87.1	91.4	96.0	100.8	105.8	111.1	116.7	122.5	128.6	135.0
Total Energy Sales Revenues	113.5	116.5	119.8	123.2	127.0	123.9	121.9	128.0	134.4	141.1
Operating Expenses										
Fuel	87.1	91.4	96.0	100.8	105.8	111.1	116.7	122.5	128.6	135.0
Less: Fuel Savings	0.0	0.0	0.0	0.0	0.0	0.0	0.0	0.0	0.0	0.0
Net Fuel	87.1	91.4	96.0	100.8	105.8	111.1	116.7	122.5	128.6	135.0
Fixed O&M Expense	2.7	2.9	3.0	3.1	3.3	3.5	3.6	3.8	4.0	4.2
Variable O&M Expense	1.2	1.2	1.3	1.4	1.4	1.5	1.6	1.7	1.7	1.8
Depreciation	9.4	9.4	9.4	9.4	9.4	9.4	9.4	9.4	9.4	9.4
Total Operating Expenses	100.3	104.9	109.7	114.7	119.9	125.5	131.3	137.4	143.8	150.5
Operating Income	13.2	11.6	10.1	8.6	7.0	-1.6	-9.4	-9.4	-9.4	-9.4
Other Revenue and Expense Items										
Interest Expense	8.0	6.5	5.0	3.4	1.9	0.6	0.0	0.0	0.0	0.0
Taxable Income	5.1	5.1	5.1	5.1	5.1	-2.1	-9.4	-9.4	-9.4	-9.4
Income Taxes	0.0	0.0	0.0	0.0	0.0	0.0	0.0	0.0	0.0	0.0
Net Income	5.1	5.1	5.1	5.1	5.1	-2.1	-9.4	-9.4	-9.4	-9.4
Plus: Depreciation Expense	9.4	9.4	9.4	9.4	9.4	9.4	9.4	9.4	9.4	9.4
Less: Principal Repayment	14.5	14.5	14.5	14.5	14.5	7.3	0.0	0.0	0.0	0.0
Net Cash Flow Before ST Financing	0.0	0.0	0.0	0.0	0.0	0.0	0.0	0.0	0.0	0.0
Memorandum Items:										
Beginning Short Term Balance	0.0	0.0	0.0	0.0	0.0	0.0	0.0	0.0	0.0	0.0
Additions to Short Term Balance	0.0	0.0	0.0	0.0	0.0	0.0	0.0	0.0	0.0	0.0
Interest On Short Term Balance	0.0	0.0	0.0	0.0	0.0	0.0	0.0	0.0	0.0	0.0
Reductions of Short Term Balance	0.0	0.0	0.0	0.0	0.0	0.0	0.0	0.0	0.0	0.0
Ending Short Term Balance	0.0	0.0	0.0	0.0	0.0	0.0	0.0	0.0	0.0	0.0
Surplus Cash	0.0	0.0	0.0	0.0	0.0	0.0	0.0	0.0	0.0	0.0

BATAAN NEW 300 MW - BUNKER C

NPC Screening Study
Cash Flow From Operations

	2010	2011	2012	2013	2014	2015	2016	2017	2018	2019
Operating Revenues										
Energy Sales Revenues										
Base	6.4	6.7	7.0	7.4	7.7	8.1	8.5	8.9	0.0	0.0
Fuel	141.8	148.9	156.3	164.2	172.4	181.0	190.0	199.5	0.0	0.0
Total Energy Sales Revenues	148.2	155.6	163.3	171.5	180.1	189.1	198.5	208.5	0.0	0.0
Operating Expenses										
Fuel	141.8	148.9	156.3	164.2	172.4	181.0	190.0	199.5	0.0	0.0
Less: Fuel Savings	0.0	0.0	0.0	0.0	0.0	0.0	0.0	0.0	0.0	0.0
Net Fuel	141.8	148.9	156.3	164.2	172.4	181.0	190.0	199.5	0.0	0.0
Fixed O&M Expense	4.6	4.7	4.9	5.1	5.4	5.7	5.9	6.2	0.0	0.0
Variable O&M Expense	1.9	2.0	2.1	2.2	2.3	2.5	2.6	2.7	0.0	0.0
Depreciation	9.4	9.4	9.4	1.7	1.7	1.7	1.7	0.0	0.0	0.0
Total Operating Expenses	157.5	164.9	172.7	173.2	181.8	190.8	200.2	208.5	0.0	0.0
Operating Income	-9.4	-9.4	-9.4	-1.7	-1.7	-1.7	-1.7	0.0	0.0	0.0
Other Revenue and Expense Items										
Interest Expense	0.0	0.0	0.0	0.0	0.0	0.0	0.0	0.0	0.0	0.0
Taxable Income	-9.4	-9.4	-9.4	-1.7	-1.7	-1.7	-1.7	0.0	0.0	0.0
Income Taxes	0.0	0.0	0.0	0.0	0.0	0.0	0.0	0.0	0.0	0.0
Net Income	-9.4	-9.4	-9.4	-1.7	-1.7	-1.7	-1.7	0.0	0.0	0.0
Plus: Depreciation Expense	9.4	9.4	9.4	1.7	1.7	1.7	1.7	0.0	0.0	0.0
Less: Principal Repayment	0.0	0.0	0.0	0.0	0.0	0.0	0.0	0.0	0.0	0.0
Net Cash Flow Before ST Financing	0.0	0.0	0.0	0.0	0.0	0.0	0.0	0.0	0.0	0.0
Memorandum Items:										
Beginning Short Term Balance	0.0	0.0	0.0	0.0	0.0	0.0	0.0	0.0	0.0	0.0
Additions to Short Term Balance	0.0	0.0	0.0	0.0	0.0	0.0	0.0	0.0	0.0	0.0
Interest On Short Term Balance	0.0	0.0	0.0	0.0	0.0	0.0	0.0	0.0	0.0	0.0
Reductions of Short Term Balance	0.0	0.0	0.0	0.0	0.0	0.0	0.0	0.0	0.0	0.0
Ending Short Term Balance	0.0	0.0	0.0	0.0	0.0	0.0	0.0	0.0	0.0	0.0
Surplus Cash	0.0	0.0	0.0	0.0	0.0	0.0	0.0	0.0	0.0	0.0

BATAAN NEW 300 MW - BUNKER C

NPC Screening Study
Cash Flow From Operations

	2020	2021	2022	2023	2024	2025	Total
Operating Revenues							
Energy Sales Revenues							
Base	0.0	0.0	0.0	0.0	0.0	0.0	473.0
Fuel	0.0	0.0	0.0	0.0	0.0	0.0	2952.8
Total Energy Sales Revenues	0.0	0.0	0.0	0.0	0.0	0.0	3425.8
Operating Expenses							
Fuel	0.0	0.0	0.0	0.0	0.0	0.0	2952.8
Less: Fuel Savings	0.0	0.0	0.0	0.0	0.0	0.0	0.0
Net Fuel	0.0	0.0	0.0	0.0	0.0	0.0	2952.8
Fixed O&M Expense	0.0	0.0	0.0	0.0	0.0	0.0	92.3
Variable O&M Expense	0.0	0.0	0.0	0.0	0.0	0.0	40.0
Depreciation	0.0	0.0	0.0	0.0	0.0	0.0	194.6
Total Operating Expenses	0.0	0.0	0.0	0.0	0.0	0.0	3279.6
Operating Income	0.0	0.0	0.0	0.0	0.0	0.0	146.2
Other Revenue and Expense Items							
Interest Expense	0.0	0.0	0.0	0.0	0.0	0.0	135.9
Taxable Income	0.0	0.0	0.0	0.0	0.0	0.0	10.2
Income Taxes	0.0	0.0	0.0	0.0	0.0	0.0	0.0
Net Income	0.0	0.0	0.0	0.0	0.0	0.0	10.2
Plus: Depreciation Expense	0.0	0.0	0.0	0.0	0.0	0.0	194.6
Less: Principal Repayment	0.0	0.0	0.0	0.0	0.0	0.0	204.8
Net Cash Flow Before ST Financing	0.0	0.0	0.0	0.0	0.0	0.0	0.0
Memorandum Items:							
Beginning Short Term Balance	0.0	0.0	0.0	0.0	0.0	0.0	
Additions to Short Term Balance	0.0	0.0	0.0	0.0	0.0	0.0	
Interest On Short Term Balance	0.0	0.0	0.0	0.0	0.0	0.0	
Reductions of Short Term Balance	0.0	0.0	0.0	0.0	0.0	0.0	
Ending Short Term Balance	0.0	0.0	0.0	0.0	0.0	0.0	
Surplus Cash	0.0	0.0	0.0	0.0	0.0	0.0	0.0

BATAAN NEW 300 MW - BUNKER C

NPC Screening Study
Constant Dollar Cash Flow

	1990	1991	1992	1993	1994	1995	1996	1997	1998	1999
Operating Revenues										
Real Total Energy Sales Revenues	0.0	0.0	0.0	83.6	89.6	86.2	83.0	80.1	75.4	71.4
Operating Expenses										
Real Total Fuel Expense	0.0	0.0	0.0	53.4	53.4	53.4	53.4	53.4	53.4	53.4
Fixed O&M	0.0	0.0	0.0	1.7	1.7	1.7	1.7	1.7	1.7	1.7
Variable O&M Expense	0.0	0.0	0.0	0.7	0.7	0.7	0.7	0.7	0.7	0.7
Depreciation	0.0	0.0	0.0	8.1	7.7	7.4	7.0	6.7	6.4	6.1
Total Operating Expenses	0.0	0.0	0.0	63.9	63.6	63.2	62.8	62.5	62.2	61.9
Real Operating Income	0.0	0.0	0.0	19.6	26.0	23.0	20.2	17.6	13.2	9.5
Other Revenue and Expense Items										
Interest Expense	0.0	0.0	0.0	18.8	16.7	14.2	11.8	9.6	7.7	6.2
Real Taxable Income	0.0	0.0	0.0	0.8	9.3	8.8	8.4	8.0	5.5	3.3
Real Income Taxes	0.0	0.0	0.0	0.0	0.0	0.0	0.0	0.0	0.0	0.0
Real Net Income	0.0	0.0	0.0	0.8	9.3	8.8	8.4	8.0	5.5	3.3
Plus: Depreciation Expense	0.0	0.0	0.0	8.1	7.7	7.4	7.0	6.7	6.4	6.1
Less: Principal Repayment	0.0	0.0	0.0	8.9	17.0	16.2	15.4	14.7	11.9	9.4
Real Net Cash Flow Before ST Financing	0.0	0.0	0.0	0.0	0.0	0.0	0.0	0.0	0.0	0.0

BATAAN NEW 300 MW - BUNKER C

Appendix F (Continued)

NPC Screening Study
Constant Dollar Cash Flow

	2000	2001	2002	2003	2004	2005	2006	2007	2008	2009
Operating Revenues										
Real Total Energy Sales Revenues	69.7	68.1	66.7	65.4	64.1	59.6	55.8	55.8	55.8	55.8
Operating Expenses										
Real Total Fuel Expense	53.4	53.4	53.4	53.4	53.4	53.4	53.4	53.4	53.4	53.4
Fixed O&M	1.7	1.7	1.7	1.7	1.7	1.7	1.7	1.7	1.7	1.7
Variable O&M Expense	0.7	0.7	0.7	0.7	0.7	0.7	0.7	0.7	0.7	0.7
Depreciation	5.8	5.5	5.2	5.0	4.7	4.5	4.3	4.1	3.9	3.7
Total Operating Expenses	61.6	61.3	61.1	60.8	60.6	60.4	60.1	59.9	59.7	59.6
Real Operating Income	8.1	6.8	5.6	4.5	3.6	-0.8	-4.3	-4.1	-3.9	-3.7
Other Revenue and Expense Items										
Interest Expense	4.9	3.8	2.8	1.8	1.0	0.3	0.0	0.0	0.0	0.0
Real Taxable Income	3.1	3.0	2.9	2.7	2.6	-1.0	-4.3	-4.1	-3.9	-3.7
Real Income Taxes	0.0	0.0	0.0	0.0	0.0	0.0	0.0	0.0	0.0	0.0
Real Net Income	3.1	3.0	2.9	2.7	2.6	-1.0	-4.3	-4.1	-3.9	-3.7
Plus: Depreciation Expense	5.8	5.5	5.2	5.0	4.7	4.5	4.3	4.1	3.9	3.7
Less: Principal Repayment	8.9	8.5	8.1	7.7	7.3	3.5	0.0	0.0	0.0	0.0
Real Net Cash Flow Before ST Financing	0.0	0.0	0.0	0.0	0.0	0.0	0.0	0.0	0.0	0.0

BATAAN NEW 300 MW - BUNKER C

NPC Screening Study
Constant Dollar Cash Flow

	2010	2011	2012	2013	2014	2015	2016	2017	2018	2019
Operating Revenues										
Real Total Energy Sales Revenues	55.8	55.8	55.8	55.8	55.8	55.8	55.8	55.8	0.0	0.0
Operating Expenses										
Real Total Fuel Expense	53.4	53.4	53.4	53.4	53.4	53.4	53.4	53.4	0.0	0.0
Fixed O&M	1.7	1.7	1.7	1.7	1.7	1.7	1.7	1.7	0.0	0.0
Variable O&M Expense	0.7	0.7	0.7	0.7	0.7	0.7	0.7	0.7	0.0	0.0
Depreciation	3.5	3.4	3.2	0.6	0.5	0.5	0.5	0.0	0.0	0.0
Total Operating Expenses	59.4	59.2	59.0	56.4	56.4	56.3	56.3	55.8	0.0	0.0
Real Operating Income	-3.5	-3.4	-3.2	-0.6	-0.5	-0.5	-0.5	0.0	0.0	0.0
Other Revenue and Expense Items										
Interest Expense	0.0	0.0	0.0	0.0	0.0	0.0	0.0	0.0	0.0	0.0
Real Taxable Income	-3.5	-3.4	-3.2	-0.6	-0.5	-0.5	-0.5	0.0	0.0	0.0
Real Income Taxes	0.0	0.0	0.0	0.0	0.0	0.0	0.0	0.0	0.0	0.0
Real Net Income	-3.5	-3.4	-3.2	-0.6	-0.5	-0.5	-0.5	0.0	0.0	0.0
Plus: Depreciation Expense	3.5	3.4	3.2	0.6	0.5	0.5	0.5	0.0	0.0	0.0
Less: Principal Repayment	0.0	0.0	0.0	0.0	0.0	0.0	0.0	0.0	0.0	0.0
Real Net Cash Flow Before ST Financing	0.0	0.0	0.0	0.0	0.0	0.0	0.0	0.0	0.0	0.0

BATAAN NEW 300 MW - BUNKER C

NPC Screening Study
Constant Dollar Cash Flow

	2020	2021	2022	2023	2024	2025	Total
Operating Revenues							
Real Total Energy Sales Revenues	0.0	0.0	0.0	0.0	0.0	0.0	1632.9
Operating Expenses							
Real Total Fuel Expense	0.0	0.0	0.0	0.0	0.0	0.0	1336.1
Fixed O&M	0.0	0.0	0.0	0.0	0.0	0.0	41.8
Variable O&M Expense	0.0	0.0	0.0	0.0	0.0	0.0	18.1
Depreciation	0.0	0.0	0.0	0.0	0.0	0.0	108.2
Total Operating Expenses	0.0	0.0	0.0	0.0	0.0	0.0	1504.1
Real Operating Income	0.0	0.0	0.0	0.0	0.0	0.0	128.8
Other Revenue and Expense Items							
Interest Expense	0.0	0.0	0.0	0.0	0.0	0.0	99.6
Real Taxable Income	0.0	0.0	0.0	0.0	0.0	0.0	29.2
Real Income Taxes	0.0	0.0	0.0	0.0	0.0	0.0	0.0
Real Net Income	0.0	0.0	0.0	0.0	0.0	0.0	29.2
Plus: Depreciation Expense	0.0	0.0	0.0	0.0	0.0	0.0	108.2
Less: Principal Repayment	0.0	0.0	0.0	0.0	0.0	0.0	137.4
Real Net Cash Flow Before ST Financing	0.0	0.0	0.0	0.0	0.0	0.0	0.0

BATAAN NEW 300 MW - BUNKER C

NPC Screening Study
Summary of Costs/Benefits

	1990	1991	1992	1993	1994	1995	1996	1997	1998	1999
NPC Nominal Power Tariff										
Revenue Requirements	0.00	0.00	0.00	34.86	43.91	41.79	39.67	37.57	32.49	27.78
Total Levelized Revenue Requirement	0.0572									
NPC Real Power Tariff										
Real Total Energy Sales Revenues	0.0	0.0	0.0	83.6	89.6	86.2	83.0	80.1	75.4	71.4
Total Real Levelized Requirement	0.0339									
Total Real Levelized O&M Expense	0.0012	0.0012	0.0012	0.0012	0.0012	0.0012	0.0012	0.0012	0.0012	0.0012
Total Real Levelized Fuel Expense	0.0258	0.0258	0.0258	0.0258	0.0258	0.0258	0.0258	0.0258	0.0258	0.0258
Total Real Levelized Capital Expense	0.0070	0.0070	0.0070	0.0070	0.0070	0.0070	0.0070	0.0070	0.0070	0.0070

BATAAN NEW 300 MW - BUNKER C

NPC Screening Study
Summary of Costs/Benefits

	2000	2001	2002	2003	2004	2005	2006	2007	2008	2009
NPC Nominal Power Tariff										
Revenue Requirements										
Total Levelized Revenue Requirement	26.44	25.10	23.78	22.46	21.16	12.80	5.23	5.49	5.76	6.05
NPC Real Power Tariff										
Real Total Energy Sales Revenues	69.7	68.1	66.7	65.4	64.1	59.6	55.8	55.8	55.8	55.8
Total Real Levelized Requirement										
Total Real Levelized O&M Expense	0.0012	0.0012	0.0012	0.0012	0.0012	0.0012	0.0012	0.0012	0.0012	0.0012
Total Real Levelized Fuel Expense	0.0258	0.0258	0.0258	0.0258	0.0258	0.0258	0.0258	0.0258	0.0258	0.0258
Total Real Levelized Capital Expense	0.0070	0.0070	0.0070	0.0070	0.0070	0.0070	0.0070	0.0070	0.0070	0.0070

BATAAN NEW 300 MW - BUNKER C

NPC Screening Study
Summary of Costs/Benefits

	2010	2011	2012	2013	2014	2015	2016	2017	2018	2019
NPC Nominal Power Tariff										
Revenue Requirements										
Total Levelized Revenue Requirement	6.35	6.67	7.00	7.35	7.72	8.11	8.51	8.94	0.00	0.00
NPC Real Power Tariff										
Real Total Energy Sales Revenues	55.8	55.8	55.8	55.8	55.8	55.8	55.8	55.8	0.0	0.0
Total Real Levelized Requirement										
Total Real Levelized O&M Expense	0.0012	0.0012	0.0012	0.0012	0.0012	0.0012	0.0012	0.0012	0.0012	0.0012
Total Real Levelized Fuel Expense	0.0258	0.0258	0.0258	0.0258	0.0258	0.0258	0.0258	0.0258	0.0258	0.0258
Total Real Levelized Capital Expense	0.0070	0.0070	0.0070	0.0070	0.0070	0.0070	0.0070	0.0070	0.0070	0.0070

BATAAN NEW 300 MW - BUNKER C

NPC Screening Study
Summary of Costs/Benefits

	2020	2021	2022	2023	2024	2025	Total
NPC Nominal Power Tariff							
Revenue Requirements							
Total Levelized Revenue Requirement	0.00	0.00	0.00	0.00	0.00	0.00	472.98
NPC Real Power Tariff							
Real Total Energy Sales Revenues	0.0	0.0	0.0	0.0	0.0	0.0	1632.9
Total Real Levelized Requirement							
Total Real Levelized O&M Expense	0.0012	0.0012	0.0012	0.0012	0.0012	0.0012	
Total Real Levelized Fuel Expense	0.0258	0.0258	0.0258	0.0258	0.0258	0.0258	
Total Real Levelized Capital Expense	0.0070	0.0070	0.0070	0.0070	0.0070	0.0070	

Appendix G

STATEMENT BY THE OFFICE OF ENERGY

The Office of Energy, part of the United States Agency for International Development (AID), plays an increasingly important role in providing innovative approaches to solving the continuing energy crisis in developing countries. Three problems drive the Office's assistance programs: high rates of energy and economic growth accompanied by a lack of energy, especially power in rural areas; severe financial problems, including a lack of investment capital, especially in the electricity sector; and growing energy-related environmental threats, including global climate change, acid rain, and urban air pollution.

To address these problems, the Office of Energy leverages financial resources of multilateral development banks such as The World Bank and the InterAmerican Development Bank, the private sector, and bilateral donors to increase energy efficiency and expand energy supplies, enhance the role of private power, and implement novel approaches through research, adaptation, and innovation. These approaches include improving power sector investment planning ("least-cost" planning) and encouraging the application of cleaner technologies that use both conventional fossil fuels and renewable energy sources. Promotion of greater private sector participation in power generation and a wide-ranging training program also help to build the institutional infrastructure necessary to sustain cost-effective, reliable, and environmentally sound energy systems integral to broad-based economic growth.

Much of the Office's strategic focus anticipates and supports recently enacted legislation directing the Office and AID to undertake a "global warming initiative" to mitigate the increasing contribution of key developing countries to greenhouse gas emissions. This strategy includes expanding least-cost planning activities to incorporate additional countries and environmental concerns, increasing support for feasibility studies in renewable and cleaner fossil energy technologies that focus on site-specific commercial applications, launching a multilateral global energy

efficiency initiative, and improving the training of host country nationals and overseas AID staff in areas of energy that can help to reduce global warming and other environmental problems.

To pursue these activities, the Office of Energy implements seven projects: (1) Energy Policy Development and Conservation (EPDAC); (2) the Biomass Energy Systems and Technology (BEST); (3) Renewable Energy Applications and Training (REAT); (4) Private Sector Energy Development (PSED); (5) Energy Training Project (ETP); (6) Conventional Energy Technical Assistance (CETA); and, its follow-on, (7) the Energy Technology Innovation Project (ETIP).

The Office of Energy helps set energy policy direction for the Agency, making its projects available to meet generic needs (such as training) and responding to short-term needs of AID's field offices in assisted countries.

Further information regarding the Office of Energy's projects and activities is available in its Program Plan, which can be requested by contacting:

The Office of Energy
Bureau for Science and Technology
United States Agency for International Development
Room 508, SA-18
Washington, D.C. 20523-1810
Telephone: 703 875-4052