PN-ABG-502

IMPROVED CHARCOAL STOVES FOR THE SUDAN

SREP

A Guide for Introducing Technologies

Energy Research Council and
Sudan Renewable Energy Project

PN-HBG-502

IMPROVED CHARCOAL STOVES FOR THE SUDAN

A Guide for Introducing Technologies

By
Mary E. Clarkin
and
Bradley P. Tyndall,
Peace Corps Volunteers

Energy Research Council
Sudan Renewable Energy Project
July 1986

ACKNOWLEDGEMENTS

Sincere thanks and appreciation are extended to Dr. El Tayeb Idris Eisa, coordinator of the Sudan Renewable Energy Project (SREP); Gaafar El Faki Ali, SREP assistant coordinator and director of the Dissemination Unit; Donald B. Peterson, chief of party for Georgia Tech Research Institute; and Matthew S. Gamser, energy economist under the contract, for their support and guidance in the development of the charcoal stove project. Gratitude also is extended to Shadia Naser El Din El Sayed, Awatif Mahmoud El Nour, Somaya Mohamed Suliman, Maha Hassan Osman, Amin Kamil Mohammed Saeed, Ishraga Taha Mustafa and Kevin McNally, all of the Dissemination Unit, who participated in the project implementation and assisted the authors in the writing of this book.

In addition, the authors wish to recognize the contributions made by four short-term advisers: Maxwell Kinyanjui in stove design, Claudia Huff in dissemination, Ben James in production and Arthur Brown in marketing.

A special thanks is given to Dr. Kenneth Maddox, who assisted in the organization and presentation of material for this book.

PREFACE

This book is intended to be a guide for those interested in charcoal stoves or related energy technologies. All information is specific to Sudan and to the experience of the Sudanese and Americans of the Sudan Renewable Energy Project (SREP I) who were involved in the charcoal stove sub-project.

SREP I is a renewable energy development program undertaken jointly by the Energy Research Council (ERC) and the U.S. Agency for International Development. The Renewable Energy Research Institute (RERI) is the implementing arm of the ERC. SREP I, begun in October 1982 and planned for completion in November 1986, includes other sub-projects dealing with renewable energy technologies, but this publication covers only its involvement with charcoal stoves.

Sudan's experience in developing and disseminating improved charcoal stoves contains general lessons and ideas that might pertain not only to other stove programs, but to any other renewable energy technologies being introduced into developing countries. These lessons are highlighted in the "Important Points" sections found at the end of the chapters on design, production, information dissemination and market analysis.

Two Peace Corps volunteers worked in the Dissemination Unit of SREP I with Sudanese counterparts from RERI. The evacuation of U.S. personnel from Sudan in April 1986 provided a hiatus in regular project activities in Sudan for SREP I. The volunteers, with input from their Sudanese counterparts, wrote this book while temporarily stationed in Atlanta at Georgia Tech Research Institute (GTRI). A draft was reviewed by the responsible Sudanese principals of RERI and SREP I prior to its publication.

Dr. El Tayeb Idris Eisa is the director of the ERC and coordinator of SREP. Gaafar El Faki Ali is the assistant coordinator for SREP and head of the Dissemination Unit of the RERI. Donald B. Peterson is GTRI's chief of party in Sudan.

SREP/RERI Information Dissemination Unit

The dissemination unit in charge of running the improved-stoves project is shown here. From left to right: Somaya Mohamed Suliman, Awatif Mahmoud El Nour, Maha Hassan Osman, Amin Kamil Mohammed Saeed, Shadia Naser El Din El Sayed, Bradley P. Tyndall and Mary E. Clarkin. Not pictured: Gaafar El Faki Ali, director of the unit; Kevin McNally and Ishraga Taha Mustafa.

Table of Contents

I. EXECUTIVE SUMMARY 1

II. STOVE DESIGN 5
- Checking Literature and Other Organizations 5
- General Survey of Industry 5
- Survey of Traditional Technology 6
- Designing the Product 7
- Building and Improving Prototypes 8
- Performing Lab Tests 9
- Conducting Field Tests 10
- Stove Models in the Sudan 11
- The Traditional Stove 11
- The Open-Draft El Duga 13
- The One-Door El Duga 15
- The Four-Door El Duga 16
- The El Jiko 17
- The All-Ceramic Stove 18
- Modified Stove Models 20
- Important Points: For Product Design 23

III. STOVE PRODUCTION 25
- Materials Survey 25
- Producer Survey 26
- Training Producers 29
- Workshops 30
- Production Strategies 32
- Grants 32
- Contests 33
- Product Orders 34
- Advertising Campaigns 35
- Checking Quality 36
- Stove Comparisons 37
- SREP/RERI Results 44
- Important Points: For Stimulating Production 46

IV. INFORMATION DISSEMINATION 47
- Creating a Staff 47
- Knowing the Product 48
- Knowing the Audience 48
- Reaching the Consumer 49
- Choosing the Right Medium 49

Comparing the Impact of Dissemination Methods 54
Establishing Lines of Communication 56
The SREP/RERI Approach 57
Important Points: For Information Dissemination 58

V. MARKET ANALYSIS 59
Identifying the Primary User 59
Types of Household Surveys 60
Developing Questionnaires 61
Tips to Increase Survey Accuracy 62
How to Handle Survey Data 63
Early Household Surveys 63
1,000-Stove Survey 64
How the 1,000-Stove Survey Was Conducted 65
Survey Findings 66
Analysis of Survey Findings 69
Stoves and the Marketplace 70
Market Projections 71
Important Points: For Market Analysis 73

VI. CASE STUDIES 75
Khartoum: A Success Story 76
Abu Galfa: Only Partial Success 77
Kosti: An Unsuccessful Attempt 79

VII. APPENDICES 81

A. Stove Programs Throughout Sudan 81
B. Charcoal Cost - Khartoum Area 89
C. Cost Analysis of El Duga Production 91
D. Cost Analysis of Traditional Stove Production 95
E. Metal Supply and Use in Stove Production 97
F. Proper Metal for El Duga Parts 101
G. Training Workshop Check List 103
H. Questionnaires 105
I. Improved Stoves Technical Drawings 107
J. Improved Stoves Templates and Molds 111

I. EXECUTIVE SUMMARY

Sudan steadily is losing its trees. At the current depletion rate, the country's forests will be eliminated within 20 years, according to statements made at a 1985 agro-forestry seminar in Khartoum.

Supply has dwindled while demand has remained high; Sudan presently derives more than 80 percent of its total energy use from biomass resources. These converging forces already have affected the market - a sack of charcoal in Khartoum cost 37 percent more in March 1986 than it did the previous March.

Because the average household's largest consumption of biomass resource energy is for cooking, improved charcoal stoves appear to be an appropriate and timely technology for the Sudan. Introducing a technology, however, is like assembling a picture puzzle - one knows how the completed picture should look, but fitting the pieces together is not simple.

For stoves and likely for other technologies, the Sudan Renewable Energy Project (SREP), staffed in part by members of the Renewable Energy Research Institute (RERI), has found four main interlocking components to the picture: design, production, information dissemination and market analysis.

A technology designed in a laboratory probably will stay there unless its developers first have surveyed potential consumers to discover their preferences, SREP/RERI has learned. Those preferences should be incorporated into the design to increase the product's acceptability. An engineer designing a stove also should consider the eventual producers: do they possess the materials, tools and skills to replicate this design? The bottom line for design, however, is: The new technology must be cost-competitive, especially if it is intended to challenge and ultimately replace a product already on the market.

For a design to be manufactured commercially, the technology should be introduced to producers in the appropriate industrial sector. They must know where to secure the raw materials, be able to apply the technology (or be given the necessary training), and know how to market the finished product. They also need to be informed of what the designers as well as consumers expect of the product (e.g., what features make the stove fuel efficient; what is an acceptable market price for the new stove). As with design, there is a bottom line in technology production, too, namely: The producers must make a profit.

Information dissemination methods can create the link between production and sales, stimulating consumer demand and consequently encouraging further production. Information can be both promotional and educational, telling consumers of the new stove's advantages, where to buy it and how to use it. SREP/RERI has found it important to identify clearly the potential user of the new stove so that suitable dissemination approaches (i.e., posters, television commercials) are chosen. The bottom line for disseminating information is: The medium should reach the likely consumer and yet be feasible in terms of the organization's budget and staff.

The fourth component in technology development is market analysis. With a new technology, there is an ongoing need to conduct surveys to ascertain consumer opinion. This information then provides direction for product designers and manufacturers. Survey findings also can pinpoint the primary audience for that technology, and from that data growth projections can be calculated. In market analysis, the bottom line is: Comprehensive consumer information must be collected to guide the product's designers, producers and promoters.

SREP/RERI repeatedly has observed the interconnections of design, production, dissemination and market analysis as it has worked to transfer improved stoves from the lab to the market and ultimately to the home. It also has learned that to focus on any one of these components totally isolated from the other three is to operate blindfolded.

Introducing improved stoves in the Sudan is a challenging task, but also one that can pay big dividends. For example, if 90 percent of the 138,000 households in Khartoum in 1983 had switched to the new fuel-efficient El Duga (duga in Arabic means small charcoal pieces) stove, an estimated 18,000 metric tons of charcoal would have been saved that year.

In fact, though, technology transfer does not occur overnight. Despite the lack of dramatic growth, improved stoves already have had a positive impact on charcoal consumption and have helped the principally low-income groups who make the stoves and use them.

Evidence that improved stoves have potential for wide acceptance was revealed in a SREP/RERI household survey conducted in the Khartoum area in 1986. More than 950 of the 1,000 housewives who tested improved-stove models during the five-week-long survey chose to buy the model they had used, in spite of the fact the purchase price was higher than the cost of a comparably sized, new traditional square stove.

Dissemination of improved stoves throughout Sudan cannot be accomplished by a single organization; the job is simply too great. Organizations working together, however, sharing ideas and coordinating efforts, can succeed in spreading this technology designed to help meet a very critical need.

II. STOVE DESIGN

Since the SREP/RERI dissemination unit began working to promote the El Duga stove in 1982, it has learned much, especially in terms of what steps are advisable to take while developing a design for a new technology. This chapter illustrates these steps that help ensure the most suitable product possible will be designed.

Checking Literature and Other Organizations

Before introducing any new technology, SREP/RERI has found that it is profitable to determine what other organizations have done successfully and unsuccessfully with similar technologies. A literature search on the international and country levels is a first step. Possibly more useful would be to check with different government agencies and other development organizations to see, specifically, what has been, or currently is being, tried.

When SREP/RERI began its stove program, it realized that little documentation had been done on the first model of the El Duga stove, consequently staff relied heavily upon individuals' accounts of the stove's early development.

During the implementation of their different stove projects, SREP/RERI and other organizations involved with stoves found it useful to share information about each other's activities and to form a common focus. These organizations held a stove meeting, sponsored by the Khartoum Forestry Department, to exchange ideas and to set the stage for further meetings and cooperation.

General Survey of Industry

In order that the product will be designed to match the capabilities of local industry, a general survey should be conducted on the machinery, tools, skills and products available in-country. In surveying workshops and factories, researchers should ascertain labor and overhead costs. The surveys should examine all industrial sectors, from informal production in shacks, to semiformal workshops to formal, automated factories. In addition, surveys prove most effective and beneficial when done prior to promotional efforts on the new product.

Previous Page Blank

By working with industry, the dissemination unit found that not all workshops or individuals had welding capabilities to make the charcoal grate for the first El Duga stove. Staff engineers changed the stove slightly so that metal seams could replace the welding to connect pieces. This small production change opened stove construction to new producers.

SREP/RERI later discovered that making the seams requires skills some metal producers do not possess; thus these seams may be inappropriate in some industrial sectors. For those who can neither weld nor make seams, a new way to connect pieces should be developed.

With any new technology, it is vital that the designers know what types of materials are available and at what cost. If they do not assume that their product will be manufactured at a factory level, where the costs would drop with mass production, they would realize that some designs should cater to other industry sectors and be designed for other types of metal such as scrap.

The El Duga prototypes were designed with new sheet metal, a realistic material for large-scale workshops. But as the stove program developed, SREP/RERI found itself working primarily with low-income producers who use aluminum or tin from cans and other scrap. For these producers using this material, the dissemination unit then began to consider designs that better match their skills and metal.

Survey of Traditional Technology

Learning what consumers and producers think about the traditional technology is important because the one being introduced will have to compete with it. It is hard enough introducing anything new into highly traditional societies, let alone something that does not match what consumers and producers expect from it.

Consumers should be asked what they do and do not like in the old technology. If the new product can be designed to perform better and appeal more than the traditional technology, yet retain those qualities that consumers are accustomed to in a product, then the new technology will probably be a winner.

But the technology will also have to have more appeal for those who would produce the stove. The survey should determine why producers make the product. Does it require little skill, high profits, or cheap materials? How much does the stove cost to make? If the designers want the producers of the competing traditional technology to convert to the new one, they must consider these factors carefully.

As new stoves were promoted, SREP/RERI found that it was difficult for makers of traditional stoves to switch over to the new stoves. Lacking in some skills, many felt that the El Duga was difficult and more time-consuming to make and required heavier metal then what they usually used. Thus, some struggled to make a profitable business out of manufacturing the improved stoves.

To solve this problem, SREP/RERI began to consider how modified designs could cater more to traditional-stove makers' production needs.

Concerning consumers, SREP/RERI found it needed to know more about their attitudes toward the traditional stove so that staff would know how to formulate new designs for improved stoves. Informal discussions with stove users gleaned some knowledge, but staff later conducted surveys to get more complete information.

Designing the Product

Following literature and agency investigations and industry and consumer surveys, product design can begin. There are several parameters for a new stove design:

1. Efficiency
2. Performance (that consumers want in the product)
3. Low cost/performance
4. Producibility (that meets needs of producers from each industrial sector)
5. Materials (that are available and used for each sector in industry)
6. Appearance

Efficiency is usually the easiest of design characteristics to meet, performance a little bit more difficult. Designed at the University of Khartoum by Dr. Yabia Hassan Hamid, past chairman of the Energy Research Council, the open-draft version of the El Duga was created for efficiency and for two performance qualities: quick ignition and the ability to burn "duga," small pieces of charcoal usually discarded as waste.

From talking with stove users and from doing surveys, the dissemination unit realized that other characteristics, such as stability and a modern appearance, are also important, but fast ignition remains most desirable.

SREP/RERI staff learned how cost-sensitive stove production is in Sudan, with the low-income consumers able to purchase only very inexpensive stoves. Staff saw that although the El Duga was efficient and appealing to buyers, it had costly materials and production procedures that placed its price beyond what many people could pay.

The original El Duga design appeared best suited for manufacture by the more formal sectors of industry. The stove's cost, materials and producibility were best matched with an average-size workshop using new sheet metal.

Also, the original prototype required welding, only available in this industry sector. But within this sector, many workshops were not skilled enough at making the circular seams that attach side cylinders to round bottom parts. One workshop attempted mass production of the El Duga and the El Jiko stoves and found that the seams had to be assembled by hand, creating a bottleneck in the production sequence.

For the low-income, informal sector, the seams did not prove quite as difficult, but punching the holes in the fire grate did. These individuals, with SREP/RERI assistance, eventually came up with techniques to reduce the time involved.

Because the stove was designed for heavier metal and had some difficult manufacturing techniques in the beginning, production caught on very slowly. But the dissemination unit, through its experience and surveys, has learned what factors in the stove can be modified to make it more easily manufactured.

Building and Improving Prototypes

Once information is gathered from other organizations, literature, and surveys, the designers can sit down to create stove models that may be appropriate. Different designs should be considered for each sector of industry with its own special needs and production parameters.

It quickly became evident to SREP/RERI staff that different stoves would be suitable for different metalworkers. Each of the existing models supported by SREP/RERI require different amounts of metal, skill, income and tools to make, thus not one stove design would suit everyone.

Actual design drawings should be taken to various sectors of industry so that prototypes can be produced. From a cost analysis, designers can ascertain how much of the cost is in materials, labor or machinery. Employing feedback from

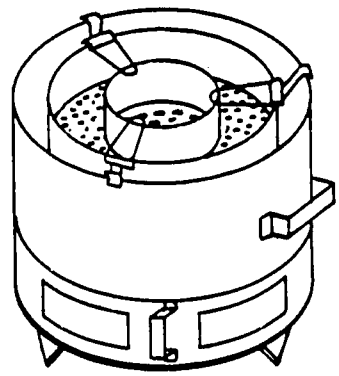

Four-door El Duga Stove

prototype manufacturers, designers should make modifications and then have the new prototypes built; from these should come more feedback and the process should repeat until they are satisfied.

When SREP/RERI developed a later version of the El Duga, the four-door model, it got both the informal and semiformal sectors to make the first prototypes. With the semiformal craftsman, staff had the opportunity to observe the stove while the metal worker made it. This proved valuable, but extra information was gained from the informal sector. Staff learned that the four-door model's sleeve was difficult for the informal-sector producers to construct accurately and that their scrap metal might make more friction for the sliding sleeve. These craftsmen told the dissemination unit how the stove would be impractical compared to other El Duga models because its sleeve would just raise the cost too much. So staff persuaded the informal-sector producers to use relatively inexpensive tin for the sleeve, as apposed to heavier gauge steel from which most of the stove is made.

Performing Lab Tests

Designers should test their prototypes for efficiency and performance, but not solely in a lab environment. Tests should be conducted in different field situations. For example stove models should be tested indoors and outdoors to see how wind and draft affect the stoves' performance.

Stoves also should be tested in cooking different kinds of local foods. The standard water-boiling test does not sufficiently demonstrate operational quality. In addition, tests should be run to see how long the prototypes might endure.

Preliminary tests showed the first El Duga stove to be efficient, and SREP/RERI is still monitoring households with improved stoves to determine how long all of the models will last. Already, SREP/RERI has learned that the original design for the charcoal grate had to be changed slightly to make it last longer under heat.

The El Duga stove's grate was originally designed with a wire mesh at the bottom of the charcoal grate. Time revealed that burning charcoal quickly erodes this mesh. Consequently, SREP/RERI staff began to teach metalworkers to make a more durable grate by using a round metal sheet punched with holes to replace the mesh.

SREP/RERI has found it useful to quickly move stove prototypes into selected homes to obtain feedback as fast as possible on the product's longevity. This testing means going out of the laboratory and into the field where additional information can be obtained.

Conducting Field Tests

Before any new product is fully introduced, it should be field tested to get complete consumer response. No matter how good the product seems, people may not accept it due to poor performance, short life-span or a displeasing appearance.

SREP/RERI completed its 1,000-Stove Survey in 1986 to gain an understanding of how consumers felt about the El Duga, El Jiko and traditional stoves. Before this survey, the dissemination unit obtained some information concerning the stoves' efficiency and acceptability by listening to comments voiced by the stoves' users and producers.

SREP/RERI found that it was very useful to conduct a small trial survey before doing its 1,000-Stove Survey. By using just a dozen homes, staff learned what logistical problems would be encountered and how questions and methodolgy should be changed before stepping into the much larger survey. This trial survey helped ensure that the more extensive one would produce more valid results.

SREP/RERI also took the opportunity of the 1,000-Stove Survey to ask other consumer questions useful for publicity and promotion purposes. (See Chapter V, 1,000-Stove Survey).

Once user information is gathered from the field, it must be relayed to the designers whose final alterations can make the product more marketable. At the time of this writing, SREP/RERI was at this stage, with analysis recently made from its 1,000-Stove Survey. Staff must work with engineers and consultants to come up with stove modifications that meet both consumer and producer needs.

Even after all of the proper steps are followed to produce a good prototype to introduce into the market and industry, additional feedback will likely result, indicating that new designs may be needed for new markets and producers. To help facilitate this growth, SREP/RERI has found that its dissemination unit has proven valuable in communicating information from the field to the office and lab. (See Chapter IV, Information Dissmination).

Stove Models in the Sudan

Four stove models have been **fully** introduced into the Sudan to compete with the traditional stove: a United Nations stove in Juba, two El Duga stoves (the open-draft and one-door models), and the El Jiko stove.

The UN stove has been supported by Euro-Action Accord in Juba. Because this stove requires much heavier and more costly materials, that Euro-Action project has opted to support the El Duga stove production.

Two stoves not fully introduced to the Sudan are the four-door El Duga and the all-ceramic stoves. SREP/RERI has field tested the four-door stove but few producers have made the stove for the consumer market. CARE (Cooperative for American Relief Everywhere) and the Khartoum Forestry Department have supported the all-ceramic stove, but its production has not yet reached significant proportions.

The Traditional Stove

To understand why the improved charcoal stoves were designed, it is helpful to look at the traditional Sudanese stove.

This stove was not designed out of a natural desire of metal producers to save charcoal. They build it in a box shape because of the ease of its construction and ready availability of its material, aluminum cans. These cans are ubiquitous and cheap.

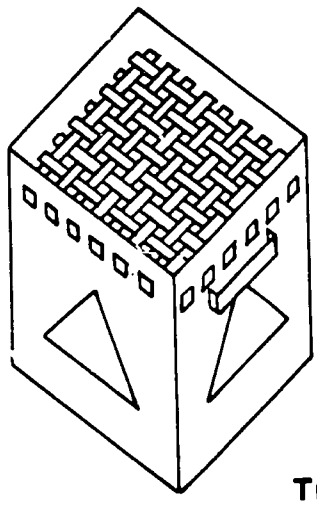

Traditional stove

Home-made tools

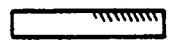

Sharpened metal strip (knife)

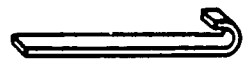

Part of a car spring (hammer)

In terms of production, any unskilled adult can quickly learn to make the stoves because the metal is so pliable and easy to cut. It takes no sophisticated tools to make these stoves.

But the traditional stove is only 17.8 percent efficient*, according the RERI tests, for the following reasons:

1. Its grate is too high, with no wind guard, so charcoal is exposed to drafts that accelerate burning.
2. Too much air enters from below because of gaping holes.
3. No insulation exists between the charcoal and the outside of the stove.
4. The stove is square, having corners that allow heat to be released without making contact with the round cooking pot.

$$\text{*Stove efficiency} = \frac{\text{Energy transferred to cooking vessel to heat water}}{\text{Energy of charcoal consumed}}$$

In terms of performance, the traditional stove has other drawbacks. There is no way to reduce heat once food is brought to temperature or liquid to a boil. Also, it cannot use the small pieces of charcoal, called duga, that compose approximately 30 percent of the bagged charcoal commonly sold in Sudan.

The Open-Draft El Duga

The open-draft model was the first version of the El Duga introduced. The stove design was completed at the University of Khartoum in 1980.

This stove is an improvement over the traditional one in that:

1. It is round, thus there are no corners for heat to escape without making contact with the pot.
2. Its grate is lower and the charcoal is protected from wind by an outer wind guard.
3. It is easier to start because it has an inner cylinder under the grate to hold and direct flames from the starter paper.
4. It has the capacity to burn duga, the small bits of charcoal usually discarded as waste.
5. It is insulated by a second ring in the charcoal grate. This outer ring is where the duga, or regular charcoal if no duga is available, is placed for insulation. But even when charcoal not put in the outer ring, the air space alone insulates.
6. It is more energy efficient than the traditional stove, according to RERI tests (24.5 percent to 17.8 percent).

Open-draft El Duga

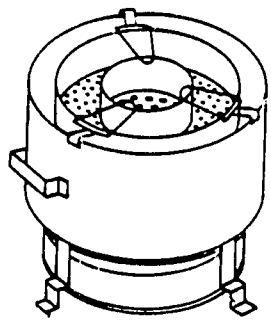

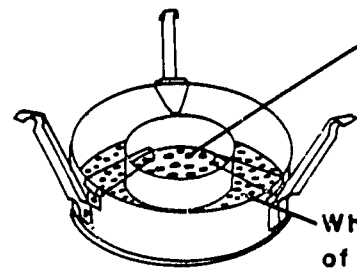

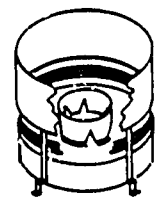

Cut-Away Showing
the Firestarter

The most striking feature of the stove is its ability to use the wasted duga, for which the stove was named. Its charcoal grate has smaller holes in its outer ring so that the small pieces of charcoal do not fall through, as they do in the traditional stove.

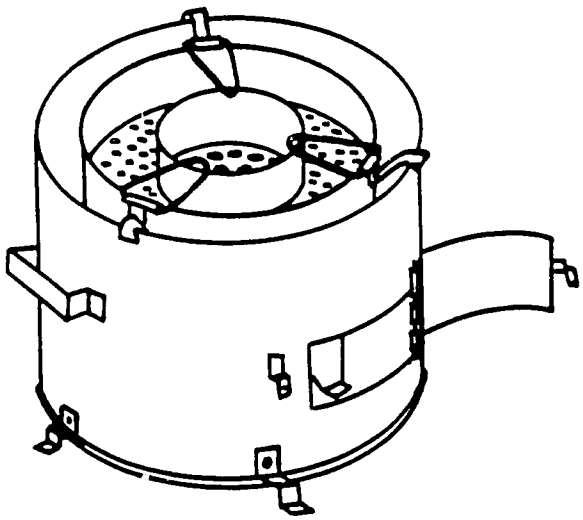

One-Door El Duga

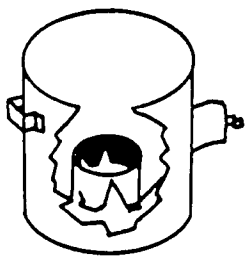

Cut-away showing the firestarter.

The One-Door El Duga

The second version of the El Duga was the one-door model. In early 1984, SREP/RERI held a stove-building contest to promote production of the open-draft model. During that time, a consultant from the Kenya Renewable Energy Project, Maxwell Kinyanjui, worked with RERI engineers and came up with another design for the contest, the one-door stove.

This El Duga model has the same features as the open-draft stove but represents an improvement for two reasons:

1. It has a door for air control.
2. It is slightly more efficient than the open-draft El Duga (25.2 percent to 24.5 percent).

This stove, however, does not perform as well as the open-draft stove in that it sometimes cooks food more slowly when there is little draft present. This stove has less air intake so charcoal may start and burn slower. It also requires a little more metal.

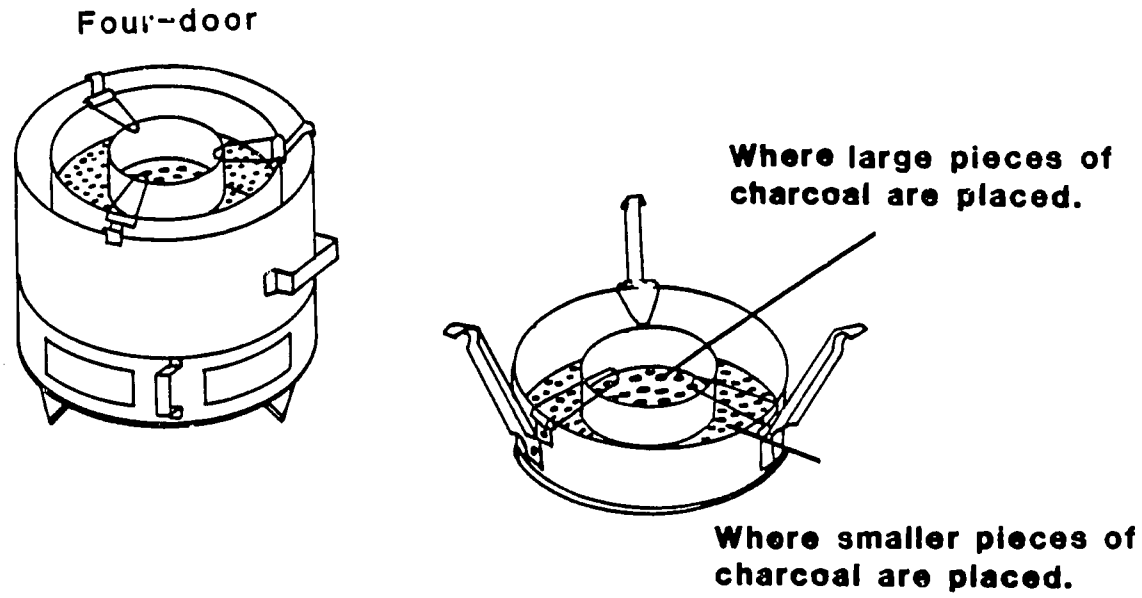

The Four-Door El Duga

The four-door El Duga stove is basically a modification of the one-door model. A Georgia Tech Research Institute consultant suggested the use of four openings and a sleeve to give the one-door model more air control.

By sliding the door, a cook could have anywhere from four openings to none. Starting with all doors open, the cook could have fast ignition and attain high heat quickly, overcoming the problems of the one-door model. Once the cook wanted the heat to level off, she could control the temperature somewhat by partially or totally closing off the openings.

During the 1,000-Stove Survey, SREP/RERI observed that many people did not use the sleeve-door, yet the stove still burned efficiently. It has been pointed out that the sleeve may not help the stove's performance much and thus may not be necessary. Any type of door that closes only loosely will allow entry of air once the fire creates a draw for oxygen. Thus the sleeve, when closing the four air holes, may not significantly reduce air flow and fuel ignition.

The four-door stove appears to perform better than the one-door model, even without its sleeve, but further tests are needed to determine its efficiency.

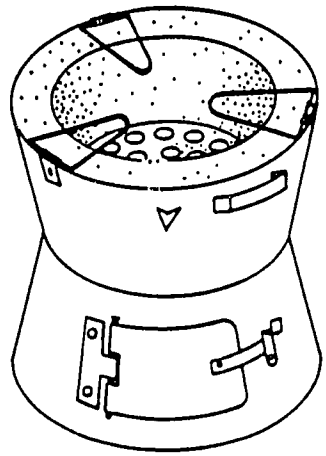

El Jiko

The El Jiko

The El Jiko was developed some years ago in Kenya. Its name, in fact, means "the stove" in Swahili. CARE first introduced this stove into Sudan in the early 1980s and SREP/RERI began introducing this stove to Khartoum in late 1985. Similar to Thailand's bucket stove, the El Jiko differs from it by employing a double conical shape, which is readily made from round pieces of metal such as tops of oil drums and which allows the support of a smaller, ceramic grate. (For the stove's dimensions, see Appendices.)

According to CARE tests, the El Jiko is much more efficient than the traditional stove (29 percent to 17.8 percent) for the following reasons:

1. It has a lower grate where charcoal is more protected from wind.
2. It has fewer air openings in the bottom to prevent excessive burning.
3. It has a door for air control.
4. It is well-insulated by its ceramic grate.
5. It is round, having no corners for heat to escape wastefully.

Most impressive about this stove is its high efficiency, even greater than the El Duga stoves. In terms of production it seems appealing in that it requires less metal than the El Duga and the traditional stove. It requires a metal somewhat heavier than the traditional stove, but lighter than the El Duga.

In terms of performance, the El Jiko is similar to the traditional stove in that it is not designed to use duga, the small pieces of charcoal. (CARE has suggested that the El Jiko may be able to use duga if a wire mesh were inserted over the ceramic grate to keep the small pieces of charcoal from falling through the grate's holes.)

The El Jiko needs more careful treatment by the user than the traditional and El Duga stoves. Its ceramic grate is somewhat fragile and needs extra attention, especially when extinguishing charcoal. Users must remember not to pour water over the ceramic grate for that would cause it to crack.

The All-Ceramic Stove

CARE, and recently the Khartoum Forestry Department office, have tried to introduce an all-ceramic stove. CARE's stove is available only sporadically in El Obeid and Gedarif, and the Forestry Department has just begun contacting Khartoum potters at the time of this book's writing. SREP/RERI has not formally worked with this stove but intends to investigate it seriously in the future, beginning with lab and field tests.

The stove has potential in that its ceramic insulation should give it high efficiency and its clay material a cheap cost. But the stove would most likely be very fragile and not as durable as the metal items. Present design information can be obtained from Mohamed Majzoub of CARE and from staff at Khartoum's Forestry Department office.

Comparison of Stoves by Performance and Appeal

	Effic-iency	Heat Cntrl.	Ease of use	Cooking Speed	Appearance	Other
Traditional Stove	17.8%	None	Easy	Slow	Normal looking for the Sudanese	Not sturdy; but light, and available in different sizes; can't use duga
Open-Draft El Duga	24.5%	None	Easiest of Dugas; harder than traditional stoves	Moderate	Most modern looking	Can use duga; very sturdy; starts better indoors with little wind; holds larger pots
One-Door El Duga	25.2%	Some	Harder than traditional stoves	Moderate	Modern looking	Can use duga; sturdy; starts well in windy conditions
Four-Door El Duga	25.2%*	Yes	Harder than traditional stoves	Moderate	Modern looking	Can use duga; sturdy; starts well in different conditions
El Jiko	29%	Some	Easy	Fastest	Old-fashioned looking	Can't use duga Fragile grate; Restricted in size because of pottery

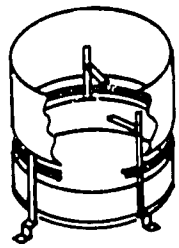

cut-away view

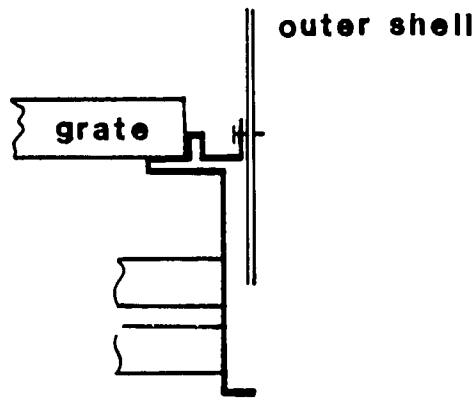

Side view of ledge support

New -support El Duga

Modified Stove Models

New-Support El Duga Stove

A GTRI consultant came to Sudan in 1985 to help SREP/RERI increase stove production. In doing so, he came up with two design modifications.

Because persuading traditional-stove makers to switch from aluminum to a heavier metal posed a problem, he altered the open-draft El Duga slightly so that it could be made with the thinner metal.

This stove has a new way of supporting its charcoal grate. Normally, the grate is supported by three hooks that rest on the stove's outer shell. The weight of the grate, charcoal and cooking pot required the outer shell be made from a sturdy, heavy and thus more expensive metal. In the modified design, the grate has no hooks and does not rest on the outer shell at all; instead, it rests on ledges that protrude from the stove's three side supports.

In this design, the outer shell could be made from any type of material because its only purpose would be as a wind guard. SREP/RERI has produced a few templates for these "new-support" stoves and has had a few prototypes made in the low-income, informal sector for which the design was intended. But no formal tests have yet been conducted.

This stove, and any improved tin or aluminum model, would have considerable potential and should be further developed. It would be easier to get traditonal-stove producers to make improved stoves if they could continue to use tin as material. For this reason, serious consideration should be made for significantly modifying the traditional tin stove. (Designers should consider lowering its grate, inserting a ring to isolate its corner spaces, and reducing its number of air holes, for example.)

Combination Ceramic/Metal Stove

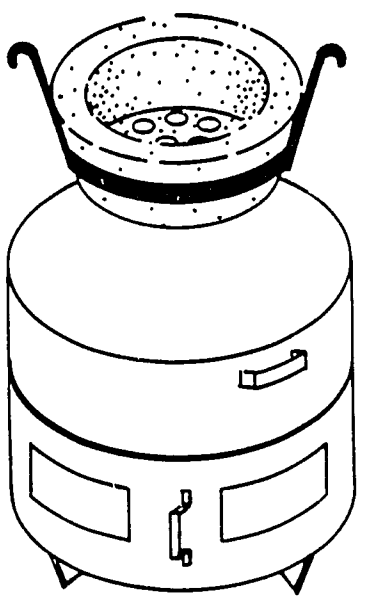

Ceramic Grate in Four-door Stove

The GTRI consultant also designed a stove for high performance. It combines the good insulation of an El Jiko stove with the air control of a four-door El Duga. By having a thin metal belt with hooks, a smaller-size four-door stove can carry the ceramic grate instead of the El Duga metal grate.

Informal testing indicated the stove seems very efficient, but its relatively unsupported grate may be fragil. Minor design changes in the belt could correct this somewhat. But if the ceramic should break, the belt would allow for an easy grate change. In places where El Duga and El Jiko producers are located near each other, such as in El Obeid, this stove might be feasible. As with other new stove models, this stove has yet to be formally tested in the lab and field to refine its design and to check it for consumer and producer acceptability.

Important Points: For Product Design

1. Before introducing a technology, check available information from other organizations and from available literature.
2. Also, do a general survey of industry materials, potential producers, the traditional technology and consumers. Work with producers within recognized parameters in developing designs.
3. Efficiency improvement is not sufficient for new designs. Consider other design parameters: performance, cost, producibility, available materials and consumer tastes.
4. When designing the prototypes, conduct extensive lab and field tests.
5. Use results from tests and surveys to filter out unsuitable designs and to alter promising ones.

6. Regarding improved stoves for Sudan, work should be done to:

   A. Further test and develop stove models that can be made from aluminum or tin, such as the new-support El Duga and a modified traditional stove.
   B. Further test and develop all-ceramic stoves.
   C. Lab and field test the four-door El Duga without its outer sleeve.
   D. Further lab and field test the combination ceramic/metal stove.
   E. Test to see if an El Jiko could burn duga if a wire mesh were inserted over the ceramic grate.
7. Design stoves for cheap scrap metal to keep their price competetive with traditional stoves. Stoves should be round, insulated, protected from the wind and devoid of excessive air holes. If possible, stoves should be able to burn duga.
8. Survey producer skills, available metal and local consumers before deciding which stove models should be taught to metalworkers.

III. STOVE PRODUCTION

SREP/RERI has realized that it is best to complete surveys on materials and potential producers before attempting to introduce production. Once this survey work is completed, production strategies that integrate publicity and training activities should be carefully prepared. When formulating strategies, different prototypes must be compared and judged to determine which are most appropriate considering localized production and marketing constraints.

This chapter covers prescribed steps for introducing the production of a new technology, compares improved charcoal stoves for Sudan and reviews results of SREP/RERI's efforts to stimulate production.

Materials Survey

SREP/RERI believes it is crucial to understand the availability and location of materials before introducing a technology. For local workers to produce the new product, materials must be nearby, affordable and suitable for the prototype model the manufacturers most likely would make.

In the case of improved charcoal stoves, SREP/RERI needed to understand the constraints on traditional-stove makers and workshops interested in manufacturing the new stoves. In 1985, SREP/RERI began an informal survey of metals in the Greater Khartoum area. Information from this survey aids the dissemination unit in determining which improved-stove prototypes would be more appropriate in areas with different metal resources.

Also, the dissemination staff could use this information before beginning a Khartoum training workshop to ascertain which stove would be most suitable for trainees. For workshop grants outside of Khartoum, SREP/RERI encourages or required that the outside organization do a metal survey before training metal workers. (See Appendices for details.)

The survey information also helps producers assemble stoves more cheaply. By knowing where to get the cheapest type and size of metal for each stove part, producers should be able to manufacture stoves that are more cost competitive with the traditional stove.

Previous Page Blank

For production of a new product on a national level, the supply of materials must be sufficient to meet the scale of work. A materials survey can prove valuable here as well. Regarding the manufacture of improved stoves, SREP/RERI found there was enough new sheet metal or heavy scrap for large-scale stove production.

To secure more complete information concerning metal and other stove-related materials, SREP gave a grant to the National Energy Administration which was tabulating the results of its Khartoum-area survey at the time of this writing.

Producer Survey

An industry survey should determine what types (sectors) of producers there are, in what numbers, in what locations, at what skill levels, at what income levels and with what attitudes. All of these factors determine which sectors, if any, could produce the new product. The information may suggest that different prototypes may be more suitable for different sectors of industry.

SREP/RERI obtained producer information in stages. When the staff first introduced the open-draft El Duga stove to Khartoum, it held a stove-making contest to stimulate production. This contest not only helped attract interested producers, but also aided staff in contacting metalworkers from all sectors of industry to serve as an informal producer survey.

From this contest, SREP/RERI learned to place producers basically in three groups: the informal, low-income producers who often work in shacks; the semiformal sector who have small metal workshops in the marketplaces (souks); and the formal sector, those with large workshops or factories.

The dissemination unit gained additional information on producers through the process of locating producers to train. It has conducted training workshops for more than two years and has found out where most potential producers, or metalworkers, are located.

But in a more formal fashion, with the help of a consultant, SREP/RERI initiated a survey to map out the location and number of all of Khartoum's traditional-stove makers. Although not yet complete, this information helps staff in organizing training workshops, for staff often tries to get these metalworkers to convert to producing the new stoves.

El Duga Workshop Producers

Regarding improved stoves in the Sudan, SREP/RERI has perceived that largely the informal sector continues to produce the El Duga stoves once they are trained. Those in the semiformal and formal workshops are usually interested but often are not convinced that El Duga production is sufficiently profitable. SREP/RERI believes most success has occurred in the informal sector for several reasons.

First, for the improved stove to compete with the traditional version, it must be made of scrap. The informal sector is the primary user of scrap. Large-scale workshops believe scrap is difficult for their machines to work with and they think that size, shape and quantity of scrap is inconsistent for large-scale production.

Second, most semiformal and formal workshops evidently feel that switching to improved-stove production would not be profitable for full-time work. With more expensive material costs involved in improved stoves, producers cannot make big profits if they wish to keep the price of the stove near that of the LS 4 (about U.S. $1) traditional stove. Thus it appears that only low-income producers, who were not making large profits, are willing to switch over to improved-stove production.

To determine if SREP/RERI's ideas were correct that formal and semiformal producers were not attracted to improved stoves for financial reasons, it performed a cost analysis of semiformal/formal workshop production and compared it with informal production.

The results supported SREP/RERI's theories. Informal producers could make El Duga stoves at the relatively reasonable price of LS 11, whereas a workshop, using new sheet metal, could produce a stove for about LS 18, far beyond the reach of what most of the market could pay. (See Appendices.)

The informal sector could produce improved stoves much more cheaply, not only because they would use scrap, but also because they had no overhead costs and could use different gauges of metal for different stove parts. The more formal sectors, which use only new sheet metal, do not have the same flexibility in gauges of metal to save money. Only heavier, more expensive gauges exist in quantity on the market.

The analysis found that the price of material does not drop significantly when purchased in bulk. With production of about 450 stoves per month, the price of the stove does not drop significantly through mass production. Thus, if workshops insisted on using new metal, the stove price would continue to stay high. (SREP/RERI estimated 450 stoves monthly as the average quota a workshop could produce considering production bottlenecks, such as making certain stove parts by hand.)

From SREP/RERI's 1,000-Stove Survey, staff learned that the LS 18 price of a workshop stove would lie beyond the affordable range of most consumers. That survey indicated that less than 20 percent of those questioned would purchase even a LS 12 open-draft El Duga stove, much less one that cost LS 18.

But improved-stove production must not be entirely ruled out for the more formal sectors of industry. Although workshops have not been eager to produce low-cost improved stoves full-time, many have voiced interest in making such stoves part-time, using their excess scrap and making profit from waste material.

Eventual full-time workshop production of the El Duga is not inconceivable. Organizations should develop new stove designs that might decrease the manufacturing cost to produce a price-competitive product even when new metal is used.

Also, full-time production is possible for the El Duga if select workshops can be convinced to use scrap. SREP/RERI has located one such workshop in Khartoum and is in the process of negotiating a grant to help it begin production.

El Jiko Workshop Producers

No formal cost analysis has been done regarding El Jiko production for any industry sector, consequently it is unknown if El Jiko production is feasible in a workshop. But because the stove requires less metal, the stove price should be much lower than an El Duga stove.

If an El Jiko workshop were to use new metal, it could produce a stove for less than LS 18, but formal analysis is needed to see if it could produce a stove cheap enough to compete with the traditional stove.

An El Jiko workshop using scrap could produce cheap, competitive stoves at a profit, and one such workshop exists - "Farouk's" in El Obeid.

This workshop, trained by CARE, has hired a few metalworkers to produce both the one-door El Duga and the El Jiko. Farouk gets his El Jiko grates from women potters outside of El Obeid who also occasionally make all-ceramic stoves. Using old barrels (oil drums) as material, Farouk is able to produce stoves at prices very competitive with the traditional stove.

In Khartoum, SREP is currently considering giving a grant to an Omdurman pottery workshop that has mass produced El Jiko grates for stoves as part of SREP/RERI's 1,000-Stove survey. This workshop, "Amin's," has contacted informal-sector metalworkers who have worked with scrap to make the metal component of the El Jiko stove for SREP/RERI's Survey.

Training Producers

After materials and producer information is obtained, the organization supporting the new technology should ascertain who it should train and how it should train them. In choosing trainees, it is important to select those who will likely continue production. For improved charcoal stoves, SREP/RERI has developed a profile, or list of characteristics, of a trainee who has good chances of continuing work on improved stoves. The list could be applied to any newly introduced technology:

Good Trainee Characteristics

1. The worker should work within walking distance of his material (metal) supply if he does not have a means to transport material. This is especially crucial where producers lack storerooms and must make frequent trips to the material source.
2. The worker should be able to sell the new product (stoves) at a price competitive with the traditional technology and earning more with the improved technology.
3. The worker should be skilled enough to build the new prototype most suited for him. For improved stoves in the Sudan, he should be able to cut, bend, seam, punch and rivet heavy-gauge metal. This is often difficult for the traditional stove makers. Metal-box makers are especially skilled at forming seams.

4. The worker should have no objection to using the appropriate material. In stove production, many people refuse to work with scrap, the only material from which cheap stoves can be made.
5. The worker should have a good attitude towards production of the new product.

Laborers with this profile tend to be: the better skilled traditional-stove makers, metal-box producers, farm toolmakers, and the metalworkers who use scrap to make various products.

Once the trainees are selected, the organization must decide how it will train them. Different types of training may be needed for different sectors because each has its own production parameters, such as skill level, tools and machines available, and producer attitudes and location. These parameters may even affect which prototypes should be introduced.

Workshops

SREP/RERI has found that training workshops are a good means for teaching stove construction. Generally, SREP/RERI has two types of workshops, formal and informal, and adjusts the format slightly depending on which stove construction is taught.

The poorer, informal-sector workers tend to be less organized and more skeptical of improved stoves and foreign organizations. For them, the formal workshop is generally better. It permits the organization to structure the training period and offers an opportunity to acquaint the trainees with the organization itself and the stove program. The formal workshops differ from informal workshops in that they have beginning and final ceremonies, a rigid daily schedule, certificates of achievement, banners, refreshments, and sometimes prizes.

But SREP/RERI does not always conduct formal workshops. Given time, staff and funding limitations, it often relies upon informal or "flying" workshops. But when it gives grants to other organizations, and cannot itself ensure the workshop quality, it prefers a formal workshop format. (For a list of workshop materials see Appendices.)

For any type of workshop, the dissemination unit tries to incorporate the following:

Pre-workshop work

1. Investigate the material resources near the trainees' location. Choose prototype which is most suitable for them.
2. Question the trainees and check staff time and the budget to determine how formal the workshop should be. The formal workshops take more time and money.
3. Prepare some publicity for the workshop (e.g., radio and TV announcements, newspaper articles).
4. Prepare the workshop site, the trainer and materials. For the dissemination unit, this usually takes a few weeks. Staff must choose a competent improved-stove producer as a trainer, locate a site and a shade tent that will attract attention during the workshop; and prepare metal, templates, manuals and tools.

Workshop Activities

1. Introduce the trainees to the organization and the technology. (SREP/RERI and the stove program).
2. Introduce the training materials. For improved stoves, staff acquaint trainees with a manual, tools and templates. The linoleum templates are forms that the trainees trace atop metal to ensure that stove parts come out to the correct dimensions. Trainees find using templates easier than having to remember dimensions and using rulers to mark metal for cutting.
3. Have trainees construct the products (stoves).
4. After the products are made, discuss the quality of the workshop and its materials. SREP/RERI uses a questionnaire to assess the success of the trainer, templates, manual and workshop format. The vast majority of trainees have found all helpful in the learning process.

5. Discuss any production problems trainees might have and how they might better market their new product.
6. Prove to the trainees that they can make a living on the new technology. Show them that their new product is marketable. The dissemination unit tries to have a market demonstration/sale immediately after a workshop using the workshop stoves. The profit from the stoves go to the trainees who made them.

Production Strategies

Once information is obtained on materials, producers and the market, the organization promoting a new technology should come up with strategies that stimulate production. The strategies should combine publicity, training, marketing and other activities that complement each other to ensure better success.

Because one basic idea in introducing a new technology is to get entrepreneurs and workers to start independent businesses, SREP/RERI has never considered becoming involved with the actual production or sales of a new product. The problem involves motivating others to begin production while standing on the sidelines.

SREP/RERI considers several strategies. It has made available workshops and grants for training and used stove contests and production orders to stimulate industry. Combining ideas from each of these, the staff is currently involved in a comprehensive advertising campaign that will be combined with the widespread distribution of templates in Khartoum.

Grants

In Sudan, grants have helped stoves reach all parts of the country and involve other development organizations in a common cause. The dissemination unit not

only has used grants for training, but also for a survey. The staff has begun to consider grant applications for workshops interested in beginning stove production with scrap.

Grants for training provide funds to purchase workshop materials such as manuals, templates and tools. (See Appendices.) Grants also help cover costs for any salaries, publicity materials and transportation. With this monetary help, SREP/RERI also provides technical assistance.

For production, SREP considers grant applications from individuals or production workshops that need relatively little financial support to establish production of a reasonably priced stove.

To date, SREP has awarded one grant for survey work. The National Energy Administration received funds to provide employees with incentives to research the status of improved stoves and the production potential of industry in the Khartoum area.

Contests

Holding contests is another way to attract workers to produce a technology. Contests provide publicity for the product and attract potential producers. For a successful El Duga production contest in Khartoum the dissemination unit ran radio and television announcements and distributed handouts on both the contest and El Duga stove construction to metalworkers. Staff spent several weeks visiting many Khartoum producers, explaining to the more interested ones how the stove should be constructed. The contest did allow for slight variations in the stove design as a way to generate producer input and insight regarding the stove design.

To emphasize that the contest aimed to spark production of the stoves, SREP offered monetary prizes for the best stove produced at the lowest price. Each participant was to submit one stove and an invoice for SREP to buy about 100 stoves. Prices quoted varied but stove quality stayed about the same. SREP awarded a monetary prize and a contract to buy stoves to three winners, one from each sector of industry: the informal, semiformal and formal.

Only the informal, low-income producers completely fulfilled the obligation to meet the SREP production order, possibly because it was the only segment that found it profitable to do so.

This El Duga stove contest was a success in that many informal-sector producers began producing it and they continue making the stoves today. The only drawback to the contest was that it did not allow staff to properly train the participants and as a result, stove quality suffered. But SREP/RERI responded by holding a workshop for the new producers to help them improve their craftsmanship and production techniques.

Contests, however, may not always be the best way to spur production. SREP/RERI learned that when it tried one for the EL Jiko in the greater Khartoum area. Although the staff followed the same procedures as before in terms of publicity and visits to industry, no interest was voiced.

Staff discovered that a single production difference in this stove compared to the El Duga was the cause. Whereas the El Duga can be produced and entered in the contest by a single metalworker, the El Jiko, with its metal shell and its ceramic liner, requires two workers combined to produce a contest entry and an invoice for a stove order. SREP/RERI had hoped that the contest would be a means of bringing the two types of artisans together, but found, with the risk of losing the contest a possibility, neither wanted to go to the trouble of working with the other. Thus, when more than one type of artisan is involved in producing a prototype, a contest may not be the best way to promote production.

Product Orders

In some cases, offering to pay for orders of the new product is a means to start people producing it. SREP/RERI has found that many craftsmen are afraid to switch products when a buyer is not guaranteed. Many metalworkers, for instance, would not even attempt to make the improved stoves. But when SREP offered to buy stoves for its 1,000-Stove Survey, metalworkers and potters took advantage of the no-risk situation to learn how to make the stoves so they could fill the orders.

The problem then became one of convincing the producers to make and sell stoves for the market. SREP/RERI has done this with some success by having the new producers make small numbers of stoves that the dissemination unit promises to help sell at a stove demonstration. But, similar to demonstrations at the end of training workshops, staff found that it is crucial to have plenty of publicity and a proven location to ensure that the stoves will sell. Once the producers see that the new product can be profitable, they will be less fearful of making it.

SREP/RERI has had more success promoting stove production in the informal sector than in formal ones by using stove orders. To begin producing a new product, formal sectors need large orders that will provide enough profit to pay for any new machinery required for the product's production. Needing only a limited number of stoves, SREP could not provide any workshops with a suitably large order. But the possibility might exist for such large orders because development agencies and organizations aiding refugees sometimes need large quantities of stoves.

Product orders can be an effective way to encourage production, but they need to be handled with much care. The dissemination unit has seen how easy it is for metalworkers to think that SREP/RERI will take on the business of selling stoves. Producers must realize that they themselves must eventually assume the responsiblility of marketing and selling the stoves.

Advertising Campaigns

One way to spark production of a new technology is to draw it out with a comprehensive publicity campaign. Effective advertising can give manufacturers confidence that they will be able to find buyers for the product once they begin producing it.

But the advertising itself will not make a product appear on the market. Producers need to be trained and their production supported before the publicity campaign begins.

SREP/RERI, at the time of this writing, was working on such an advertising/production activity. Staff worked with a Khartoum publicity agency to develop a television commercial for simultaneous release with radio, newspaper and other promotional announcements.

In addition, staff planned to distribute templates to several semiformal workshops in Greater Khartoum that have occasional scrap so that they may become involved in part-time stove production. Templates were also to be given to any previously uncontacted producers of the traditional stove.

The strategy aims to generate production among a certain percentage of those who get the templates. With the advertising blitz increasing stove demand, metalworkers should believe that buyers do exist for any stoves produced. Semiformal workshops should be motivated to make good use of their waste scrap.

From experience, SREP/RERI has seen that most manufacturers who have heard about or been trained in improved stoves are very willing to make them if a buyer is guaranteed. When staff received stove orders, for example, many artisans familiar with the stoves but who were not producing were drawn out to begin production. Thus, with a comprehensive advertising campaign, a significant percentage of these reluctant workers and those just getting the templates should begin production.

But as with the stove contest, product quality might be somewhat poor because those receiving the templates will have had no formal training; therefore, SREP/RERI will have to prepare for much follow-up work to rectify the situation.

Checking Quality

Once production strategies have stimulated people to produce a new product, constant monitoring is needed to ensure that quality is maintained. If quality is not good, the entire new business could be jeopardized. Word-of-mouth advertising would be negative.

SREP/RERI staff sometimes have found people dissatisfied with their improved stove, and upon investigating complaints often learned that the stoves were poorly made. Shoddy products ultimately generate a negative image.

To confront this problem, SREP/RERI tried to locate producers of poorly made stoves to explain to them the importance of quality work to their own success. And when stoves were found in the market where no producer could be located staff tried to convince the merchants not to sell them. On some occasions, staff members have made minor stove repairs themselves.

When the dissemination unit discovered that many producers in the same area represented poor quality, it conducted a training workshop for them.

Quality checking and monitoring is very time-consuming. As more people begin producing the new stoves, additional staff, time, money and transportation will be needed. Nonetheless, proper resources should be allotted; for if quality remains low, so will stove production, stove use and stove acceptance.

Stove Comparisons By Production

SREP/RERI has found through its surveys and experience that each of the improved stove models - due to varying design, material and skill parameters - is suitable in different situations.

The Traditional Stove

The traditional stove is a tough competitor for the improved charcoal stoves because it is so cheap and easy to make. Given the ready availability of its material and this metal's pliability and thinness, almost any unskilled artisan can quickly learn how to build it. This stove requires few tools; in fact, some traditional-stove producers simply use a homemade knife and hammer.

To make the stove, an artisan uses large aluminum or tin cans that he either picks up gratis or buys for very little. He then takes these cans, opens them up and flattens them into sheets. He then connects several sheets with seams to form the stove's square body. Then he takes thin strips of metal to run across the top of the stove to form the grate. He finishes the stove by cutting out side air holes and adding handles.

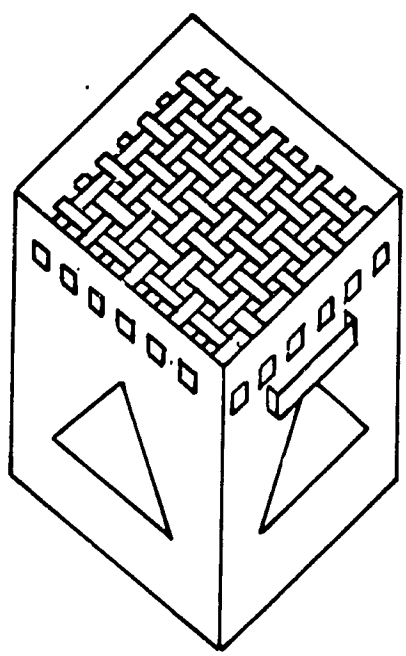

Traditional stove

The El Duga Stoves

Each of the El Duga stoves - the open-draft, the one-door, and the four-door models - requires more skill, more tools, costlier materials and more time to make. Consequently, the stoves cost more, although they do perform better and should last longer because they are made from a heavier gauge metal.

Most of the techniques involved in making the El Duga stoves are the same as for the traditional stove. But because the artisans must work with thicker and even curved pieces of metal, their skills must be more developed. This means that not all traditional-stove makers are able to build the El Duga stoves well, at least as the stoves are currently designed.

But if the El Duga models were modified to use tin, they would be more suitable for low-skilled workers. Or, rather than using an altered design, the traditional-stove makers could use aluminum in the current design if they could crimp the aluminum with a crimper.

Among the three principal El Duga stoves, there occur differences in material, skill and time needed for production:

The **one-door model** is the easiest to make, requiring less time, but needing a wider strip of metal for its outer shell. These strips are more difficult to obtain in scrap and are a little more expensive. This stove is appropriate for workers of modest skill and having access to the wider strips of scrap.

The **four-door model** resembles the one-door stove except it has four holes in its outer shell and needs a sleeve to fit properly around them. The sleeve is what makes this stove more difficult to construct. Even for experienced El Duga producers, the sleeve causes some problems at first. Thus, this stove requires a little more skill or practice.

With its outside sleeve, this stove needs more metal. But the sleeve can be made of a thin-gauge, inexpensive metal because it is not exposed to any flame or pressure.

This stove's advantage over the one-door model is that it performs better by starting more quickly and by having better heat control via its four doors.

The **open-draft model** has both advantages and disadvantages over the one- and four- door model El Duga stoves. Although this stove uses the same gauge metal as the other models, it takes a thinner strip for its outer shell. But due to its three outside rings that must be attached to to internal support legs, this stove is more difficult to make.

Although this stove may not always perform as well and is more difficult to make than the two other El Duga models, it has great appeal to producers. It is easier for them to find the thinner strips of metal to produce the stove and it is often easier for them to sell it because it looks more modern.

If skills, materials and price constitute problems in getting metalworkers to produce the El Duga stoves, small modifications in the stoves can enhance appeal to producers. But these modified El Duga stoves may not be as durable and may not be as physically appealing to the consumer. The stoves should carry a cheaper price to help compensate for those drawbacks.

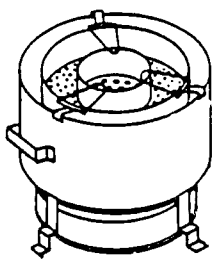

Open-draft El Duga

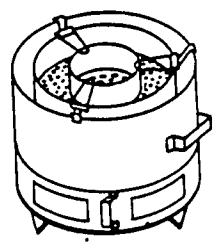

Four-door El Duga Stove

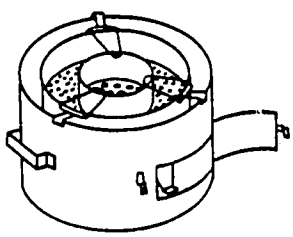

Open-draft El Duga

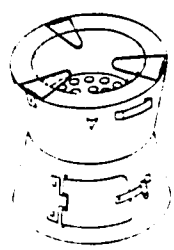

El Jiko

Modified El Duga Models

New support

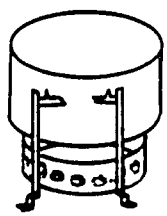

1. Grate has no hooks; it rests on a ledge from support legs. Enables shell to be be made from light metal.
2. No pot rests.
3. Instead of two lower rings, it has one with air holes punched in it.

One-door

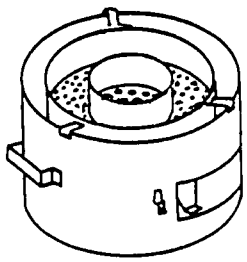

1. No pot rests.
2. No door.
3. No legs.

Four-door Stove

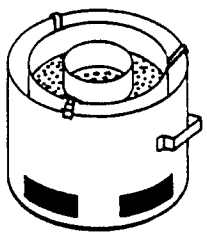

1. No pot rest-
2. No sliding door.
3. No legs.

The El Jiko Stove

The El Jiko stove has different production characteristics from the El Duga stoves. This stove involves two different types of artisans - potters for the ceramic grate and metalworkers for the outer cladding - which complicates manufacture. Not only do twice as many artisans need to be trained, but the two groups need to be somehow brought together.

But in many respects this stove shows promise. Because it requires less metal than the El Duga stoves and utilizes inexpensive ceramic instead of metal for the grate, the stove costs less. And where the El Duga demands larger pieces of metal, the El Jiko requires smaller, thinner pieces. In that Sudanese stoves are very price sensitive and because finding scrap metal can be difficult, these characteristics are extremely significant.

The El Jiko's templates are curved, not rectangular as the El Duga templates are. Thus the El Jiko makes best use of metal that is circular, such as from barrel lids; but even if its pieces are cut from rectangular sheets of metal, the stove consumes less metal than the El Duga stoves.

One-Door El Duga Templates

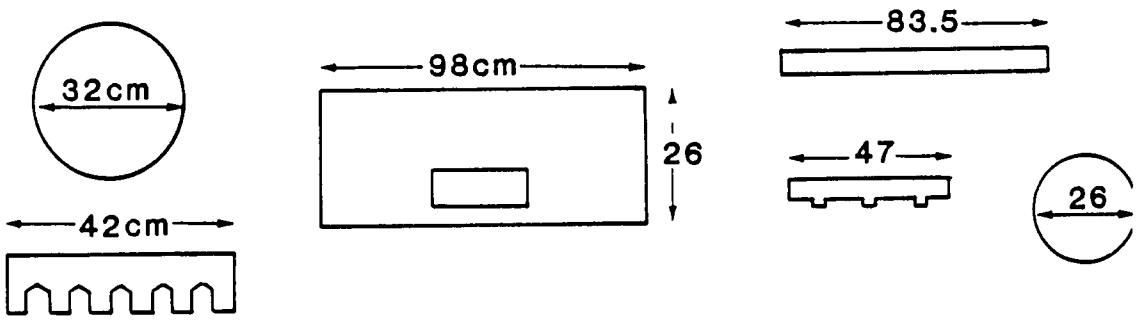

El Jiko Templates

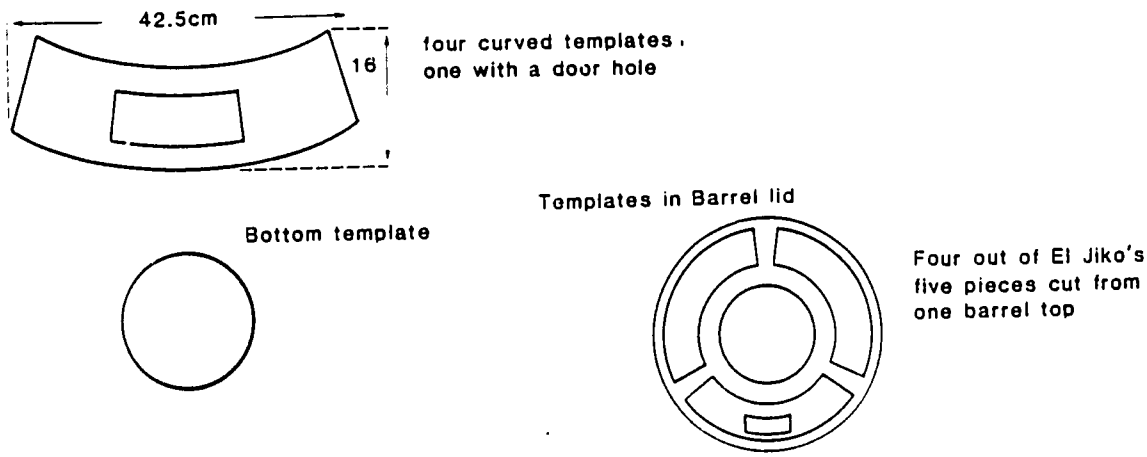

Although the stove requires about the same level of skill as the El Duga, the El Jiko takes less time to make if potters and metalworkers are producing at the same time. In terms of tools to construct the stoves, the El Jiko needs a little less equipment for it does not require riveting or hole punching.

In terms of producer appeal, most artisans are reluctant to work with another artisan group towards a finished product. This has posed a problem for SREP/RERI in its El Jiko program in Khartoum. But the stove has appeal to the producer in that its high efficiency can help ensure that he will satisfy his buyers.

Comparison of Stoves by Production

Stove	Materials Required (Type, Size, Supply, Cost)	Production Time	Skills Needed
El Jiko	-Medium-gauge scrap metal; lighter metal possible for the stove's bottom; +Needs ceramic for grate -Needs only very narrow strips for outer shell; +Small amount of clay -Large supply of medium-gauge scrap metal; +Not all areas have proper clay -LS 3.50* for metal +LS .50 for ceramic	2 hours for metal part; +15 minutes with 9 days for drying & firing	Experience with hand tools +Experience with clay

*LS 1 = about US$ 0.25

Comparison of Stoves by Production

Stove	Materials Required (Type, Size, Supply, Cost)	Production Time	Skills Needed
Traditional Stove	-Scrap tin from cans -Wide sheets for outer shell -Very large supply of tin available -LS 1.30 for tin	1 & 1/2 hours	Little
Open-Draft El Duga	-Medium- & heavy-gauge metal, preferably scrap; some tin possible for the bottom of the stove -Narrow sheets for outer shell; extra metal for grate -Large supply of this heavier gauge scrap in big cities; if not purchased in quantity, metal sometimes difficult to obtain because some factories sell scrap by truckloads -LS 5.20 for scrap metal	3 hours	Much experience with hand tools
One-Door El Duga	-(Same as above) -Wider outer shell; extra metal also needed for grate -(Same as above, but metal slightly more difficult to obtain for the wider sheets needed for the outer shell) -LS 6.00 for scrap metal	2 & 1/2 hours	Experience with hand tools
Four-Door El Duga	-(Same as above, but sleeve can also be of tin) -(Same as above, but extra metal needed for sleeve) -(Same as above) -LS 6.50 for scrap metal	3 & 1/2 hours	Experience with hand tools

Each improved stove has advantages and disadvantages relative to other models. Thus, it is important first to survey the skills, tools and materials of potential producers and survey for marketing information before deciding which stove is most appropriate. The previous chart might prove helpful during this process.

SREP/RERI Results

Although these figures are promising, production does not yet satisfy the market's demand for stoves. Compared with traditional stoves, the improved ones represent only 4 percent of the market, according to a GTRI consultant's figures.

Although some 100 people have produced improved stoves at one time or another, only about 40 have produced in any one time period.

To date, most improved-stove producers are low-income individuals working independently. Willing to use scrap and sell stoves at a price affordable to many charcoal users, they still have found it profitable to switch to production of these new stoves.

SREP/RERI believes its stove program not only has contributed to the effort to help alleviate Sudan's energy problems, but also has helped low-income workers generate more income for themselves.

Yet, more work promoting the stoves, through the stimulation of more production and through the development of new designs and modifications, needs to continue.

To date, in the Sudan, more than 200 people have been trained with the efforts of SREP/RERI, CARE and SREP grantees. SREP has given grants in the form of monetary and technical assistance to the Sudanese Forestry Department, PLAN-Sudan, CARE, the Adult Education Center of Shendi, Rahad Agricultural Scheme and Euro-Action Accord. The following chart shows a breakdown by city. Most of the trainees were instructed in El Duga production; those trained in the El Jiko are appropriately marked. The producer figures show the number of trainees who have made improved stoves at some time or another. The figures do not indicate how many have produced stoves in any single time period.

Improved-Stove Producers

(1983-1985)

	# Trained	Producers
Khartoum (SREP/RERI)#	15	25
Omdurman (SREP/RERI)+&	41	15
Khartoum North (SREP/RERI)	6	2
Wad Medani (Forestry Depart., SREP/RERI)	15	4
Abu Galfa (PLAN, SREP/RERI)	17	3
Gedarif (CARE, SREP/RERI)	?	4
El Obeid/Kordofan (CARE, SREP/RERI)+	50	22
Shendi (Shendi Adult Ed., SREP/RERI)+	32	3
Southern Region (Shendi Adult Ed.)	15*	2*
Juba (Euro-Action, SREP/RERI)	3	?
Sennar (Forestry Depart., SREP/RERI)	12	3*
Kosti (Forestry Depart., SREP/RERI)	9	?
Rahad Scheme (Rahad, SREP/RERI)	15	4*
Sinkat (Forestry Depart.,UNICEF, SREP/RERI)	15	4*
TOTAL	245	91

Production spread to trainees' neighbors
& Includes potters and metalworkers who produced El Jiko stoves for SREP/RERI's 1,000-Stove Survey
+ Includes El Jiko producers
* Estimates

Important Points: For Stimulating Production

1. Conduct surveys for materials to understand the production potential for each product prototype in different locations.
2. Conduct a survey for potential producers from different sectors of industry to match their skills, tools, incomes, locations and materials with appropriate prototypes.
3. Train potential producers in a format and with a proper prototype suitable for them. A training workshop is a good educational method.
4. Templates and manuals are appropriate tools to teach construction and to disseminate the technology to workers and their peers.
5. Immediately after training, new producers need to see that their new product will sell if they are to begin and continue production. A market demonstration/sale with supporting publicity can serve this purpose.
6. No one will switch to producing a new product unless he thinks he will earn more money with it. For potential producers, determine how much profit they could make if they sold the new product at a price affordable to the majority of consumers. Compare their profits from the new product with what they were making before.
7. Once workers begin to produce, they need continual support through quality checking, publicity, marketing and investigations into better and cheaper sources of metal.

IV. INFORMATION DISSEMINATION

To bridge the gaps between engineers who design improved stoves, metalworkers who build them, retailers who sell them and consumers who use them, SREP/RERI put an information dissemination unit in charge of its stove project.

That unit was directed to:

1. **Educate consumers of the new technology's advantages.**
2. **Promote commercialization of the technology.**
3. **Establish lines of communication with designers, producers, retailers and consumers, as well as with other organizations promoting the same technology.**

Creating A Staff

SREP/RERI determined that a person need not be a journalist or even a university graduate to disseminate information effectively. He just needs to be motivated, given guidance and provided adequate resources. The SREP/RERI dissemination unit in Khartoum is headed by an economist and is staffed by a media specialist, a forester, a college social studies major, a couple of engineers and two Peace Corps volunteers.

The staff has discovered a dissemination team works well with a mix of men and women. Generally, women are quite capable of handling all phases of stove production. On rare occasions, however, a producer balked at suggestions or criticism from a woman. By the same token, men did not conduct SREP/RERI household surveys because their presence might have made the interviewed housewives uncomfortable. Nevertheless, a stove program should try to avoid putting staff members in rigid roles.

Because information dissemination is a new concept in Sudan, organizations may be forced to look outside the country for staff training. Over a 20-month span, SREP/RERI brought in two information/media consultants and one marketing consultant to introduce techniques and provide direction. Two- or three-month periods were preferred over long-term consultancies, to control costs and to avoid the risk of the staff becoming too dependent on outside decision-makers.

How well the sponsoring organization lays the groundwork for a consultancy can determine its success, SREP/RERI learned. At the outset, the organization should ask itself: Why is this consultancy needed? What specifically is expected to emerge from this consultancy? and, very important, When is the appropriate time for a consultancy in terms of the staff's schedule and the the technology's development? In reference to that last point, the unit learned that working with more than one consultant at a time is too demanding of staff resources, vehicles and personnel.

Study trips to other African countries with stove programs also educated and motivated unit staff. For example, several staff members traveled to Kenya to observe its successful El Jiko stove program.

Of course, hiring overseas consultants and sending staff members on study trips take money. Frankly, dissemination of a new technology in the Sudan cannot be done cheaply. For example, transportation is a major cost, and SREP/RERI found having one vehicle for its Khartoum-area stove program was insufficient.

Knowing The Product

When someone joins the dissemination unit staff, SREP/RERI has learned, it is important he first educate himself about the stove so he does not spread erroneous information. He can read in-house documentation or ask others on the staff such questions as: Why is the new stove better than the traditional stove? How was the design developed? Who builds the stove? What are characteristics of a well-made stove? How much does it cost and where is it sold? Who is buying the stove?

Ultimately, the new employee should operate the stove himself. SREP/RERI staff members who used the El Duga stove extensively at home had more confidence discussing its characteristics with consumers.

Knowing The Audience

To disseminate information effectively, there should be a clear understanding of who the audience is for this new technology.

Armed with little data about the traditional-stove user, the SREP/RERI staff originally printed an expensive pamphlet with text and pictures on the use and advantages of the new stove. Later, the staff adopted a pictures-only handout when it learned 46 percent of the housewives in the 1,000-Stove Survey were illiterate.

Organizations wanting social and demographic data first can conduct preliminary neighborhood surveys to find out which economic classes use charcoal stoves daily and where those people live. Next, household surveys in those neighborhoods will disclose who buys the traditional stove, who in the family uses the stove and for what purposes, and what the user likes or dislikes about the stove.

In that same survey, the staff can obtain valuable background information by asking: How many people are in the household? What is the monthly income for the household? What is the stove user's level of education? Does the user read newspapers or magazines, listen to the radio or watch television?

The organization can use these answers to design a marketing approach that will reach the consumer.

Reaching The Consumer

The dissemination staff sent two types of messages to the consumer: educational and promotional. Frequently, the messages were combined in one medium. For example, one SREP/RERI poster advertising the fuel-efficient stoves also illustrated how a well-made El Duga stove looks.

If the technology is complex or if, in the case of the El Duga stove, improper usage hurts the technology's effectiveness, staff will want to incorporate an educational message in nearly all its promotional material.

Methods for disseminating information range from handouts and pamphlets to newspapers and magazines, radio and television, market demonstrations, slide shows and exhibits (such as at the Khartoum International Fair).

Even with its relatively large staff and budget, SREP/RERI discovered it could not employ all these media with equal vigor and resources. The process had to be selective.

Choosing The Right Medium

An example of making choices was when SREP/RERI, preparing for the 1,000-Stove Survey, decided not to host an exhibit at the 1986 **Khartoum International Fair.** It reached that decision after weighing these criteria:

1. What message will be conveyed through this medium?
2. Will this medium reach the appropriate audience?
3. What demands will be placed on the staff's time?
4. What demands will be placed on the budget and vehicle?

An educational and promotional message about improved stoves, the staff believed, would not reach large numbers of daily charcoal-stove users, because fair-goers probably come from middle- and upper-income groups. Also, the fair would have tied up the staff and one vehicle for several weeks. Renting fairground space and covering the cost of the exhibit would have been expensive, too. Clearly, participating in the fair was not feasible for SREP/RERI.

Those same four criteria can be referred to in determining the appropriateness of other dissemination methods.

SREP/RERI **handouts and pamphlets** both explain how to operate improved stoves, but they differ sharply in price. A pamphlet printed in Khartoum can cost LS 1.60 each, while a photocopied one-page handout costs mere piasters. That does not mean necessarily, however, that a pamphlet is an unjustified expense.

SREP/RERI has found a glossy pamphlet helpful when trying to persuade a skeptical audience, such as a potential stove maker or a market retailer, of the new stove's merits and of the staff's commitment to promote it. At crowded affairs such as stove demonstrations, however, it is more practical to dispense handouts.

The dissemination staff devised a new handout minus text when it discovered the relatively high rate of illiteracy among women in Khartoum. It also revised its original stove pamphlet, substituting drawings for photographs of a woman using the stove. SREP/RERI had failed to have the woman in the photos sign a formal release statement, and she later filed a lawsuit.

Handouts and pamphlets are very easy to distribute; a staff member can give them to retailers and producers to pass on to stove buyers, or give them to other programs promoting the same stove in different parts of Sudan. Posters, however, present a distribution challenge.

Posters can be printed in Khartoum, probably costing LS 4 to 5 apiece, and with a minimum order of 1,000 required. Putting up 1,000 posters throughout the Khartoum area places heavy demands on a staff's manpower and vehicle. If another group is contracted to put up the posters it might need supervision which also would require staff time and attention.

When a youth group volunteered to help distribute posters throughout the Khartoum area, the SREP/RERI staff accepted the offer and handed the youths posters and paste. Few posters ever appeared on the streets, however, probably due in part to the dissemination staff's failure to provide close supervision.

It might be easier to distribute posters to households (i.e., give them to households participating in surveys; give them free with the purchase of a new stove at the souk), but they would be much less visible. Posters also could be distributed to central school or business offices for dispersal, but again the posters would not be very visible and might not reach the primary audience.

Newspapers and magazines (particularly "Sudanow" magazine which is published in English) likewise may fail to reach the appropriate audience. The illiteracy among Khartoum-area housewives prevents printed materials from being very effective, especially since SREP/RERI household surveys have revealed those same women are the principal buyers of traditional stoves.

This development is unfortunate because press coverage is free. SREP/RERI staff-written stories have appeared in full in major Khartoum newspapers and in "Sudanow" magazine at no cost.

An organization still could use the press to educate readers of the link between traditional stoves and the worsening fuelwood shortage, but it should be aware of the limited impact of newspapers and magazines and not inflate the merits of print medium based on the fact it is free.

Radio and television reach a large and suitable audience in the Khartoum area. Of the 1,000 housewives in the SREP/RERI survey, more than 80 percent said they watch television.

The dissemination staff suspects that in rural areas, particularly in villages without electricity, television is scarce to nonexistent. Radio reportedly is heard widely, but SREP/RERI has no data to confirm this.

Television Omdurman and Radio Omdurman are the principal stations in Sudan. Other towns do have television and radio stations, but those smaller stations offer only limited local programming, with most coming from Omdurman.

Both Omdurman stations broadcast free public service announcements (e.g., announcements of coming stove demonstrations). In addition, there are news and feature televison shows that have reported on renewable energy technology trends.

There are companies in Khartoum capable of designing and coordinating production of television commercials. Altnough commercials are a comparatively expensive advertising medium, SREP/RERI contacted a firm to design a stove commercial in 1986. The staff anticipates the commercial, being planned in conjunction with a campaign to boost stove production, will have a noticeable impact.

For a stove program with funds but little manpower, television commercials appear to be a suitable approach. The dissemination staff will know more about the cost-effectiveness of commercials after its own commercial has aired.

SREP/RERI does have some information of radio advertising. The staff does see great potential in it. However, the staff has not had time yet to pursue the use of this medium.

Market demonstrations are another means of promoting the stove. At demonstrations, the dissemination staff boils water on improved stoves and a traditional stove, while explaining the advantages of the former. Stationed nearby are producers ready to sell their stoves and prepared to handle all money transactions.

Demonstrations require one week of planning by approximately three staff members and the use of one vehicle periodically throughout the week. On the day of the demonstration, two vehicles usually are needed to transport the staff as well as the producers and their stoves to the market.

The staff also may want to bring such materials as banners, posters, a table for the stoves, an umbrella to shade the demonstration staff, stoves and charcoal, pots with lids, a loudspeaker and a video camera. Obviously, hosting a demonstration can be costly, even though market authorities charge no fee for demonstration permits.

Another matter to consider is the audience. Friday is the major market day in the Sudan, with many men going to the souk. SREP/RERI surveys have found, however, that women, not men, are the traditional purchasers of stoves - and they go to the market during the week. What has not been determined yet is whether the significantly more expensive El Duga stove might require the purchase decision by the male head of the household.

Although SREP/RERI has hosted many market demonstrations in Khartoum-area souks, it still has not found a foolproof method to guarantee success. Sometimes 70 stoves have been sold at a demonstration; other times only seven. Typically, 30 stoves are sold at a Friday market demonstration.

Some tips for a Khartoum-area demonstration are:

1. From 20 to 70 stoves at a demonstration are advised. An overabundance of stoves actually can hurt sales.
2. Do not hold demonstrations late in the month, before monthly paychecks are issued.
3. Demonstrations in very low-income neighborhoods probably will have low sales, which might discourage new producers.

Recently, SREP/RERI has sought to eliminate the need for its dissemination staff to serve as demonstration host; instead, neighborhood women are being encouraged to fill that role. For example, a woman notifies her neighbors of the demonstration to be held in a nearby football field or a school yard. SREP/RERI transports the producers and stoves, but that is the extent of its role. In advance, the demonstration organizer and the producers agree on what the latter will pay the former for staging the event. Usually, the producers pay the woman LS 1 for each stove sold.

Slide shows, like Friday market demonstrations, put the dissemination staff in direct contact with potential consumers. Slide shows both educate the consumer and promote improved stoves, particularly if a producer is brought along to sell stoves. Initially, of course, the dissemination staff must locate an audience.

SREP/RERI found several surveyors in the 1,000-Stove Survey eager to promote improved stoves in their neighborhoods after the survey had ended. One surveyor invited women in her neighborhood to the local community center for a presentation. The dissemination staff ran the slide show, with the host providing narration.

One staff member is sufficient to handle a slide show. The slides illustrate the development of the stove, how to use the stove and where the stove is made. Usually, the neighborhood woman hosting the event is paid an incentive for her organizational work and expenses.

An organization on a very limited budget still should consider the purchase of a camera and slide projector. Slides and photos are a good way of documenting an ongoing project, and slides especially are useful in presentations. SREP/RERI has slides of the El Duga stoves dating back to 1983 and presents at least one slide show a month, most often to other agencies interested in renewable energy technologies.

Even a heavily budgeted program should avoid the temptation of investing in media hardware beyond camera(s), film and slide projector(s), unless it has staff already trained to use the equipment or it can provide training. SREP/RERI has a video camera and a video cassette recorder, but it has used them very little.

Comparing the Impact of Dissemination Methods

It is easy to compare and evaluate these different dissemination approaches in terms of cost and manpower; it is much more difficult to compare their effectiveness. SREP/RERI has tried all these methods, dropping some when the outcome did not seem to merit the investment. Those were not decisions based on formal study, however. A thorough review of how effective these dissemination approaches are in Sudan would be valuable.

The dissemination methods descriped here certainly do not represent the complete range of options. Three possibilities the SREP/RERI staff has not had time to evaluate are: distributing decals or stickers featuring pictures of improved stoves to bus drivers to post on buses; ordering billboards advertising the stoves; and mounting a media campaign with a prominent Sudanese singer or athlete touting the stoves.

DISSEMINATION METHOD	MANPOWER-INTENSIVE	MONEY-INTENSIVE	POSITIVE/ NEGATIVE
Handout (A-4-size paper, photocopied)	—	—	Cheap; can be distributed widely. Not durable; weak promotional tool.
Pamphlet	*	**	Convenient size; has polished look. Printing costly.
Poster	***	***	Can be attactive, catch public's eye. Hard to distribute.
Newspaper/ Magazine Articles	*	—	Coverage free; permits detailed description. Illiteracy high.
Radio	?	?	Limited variety enhances impact. SREP/RERI data on radio insufficient.
Television (Commercial)	**	****	Reaches prime audience; dramatic. Expensive; repeated use not feasible.
Market Demonstration	**	*	Creates attention; motivates producers. Friday events fail to reach housewife.
Slide Show	*	**	Visuals appropriate for housewives. Equipment, electricity needed.
Khartoum International Fair	***	***	Strong promotional medium. Fair-goers not prime audience.

* denotes degree

Establishing Lines of Communication

The SREP/RERI staff considers it vital to establish and maintain communication with producers, retailers and consumers. Toward that goal, staff members pay at least monthly visits to Khartoum-area producers and retailers to keep up-to-date and to demonstrate the staff's continuing interest.

That's the easy part. Establishing regular communication with consumers is more complicated. Before late 1985 when SREP/RERI began a series of household surveys, the dissemination staff had very little feedback from consumers. The staff probably will continue to use surveys as a means of communicating with consumers, in the absence of any other system.

Currently, there are no engineers working on improved-stove designs for SREP/RERI, but future engineering consultants will be given consumer survey findings, as well as staff documentation on producers and retailers, for guidance in developing an appropriate technology.

From experience in transferring a new product from the lab to the producer, retailer and consumer, a stove program will gain valuable insight which could benefit other organizations and should be passed on.

Since 1985, SREP/RERI has been compiling monthly stove reports, with the help of CARE-El Obeid, CARE-Gedarif and PLAN Sudan-Abu Galfa, which voluntarily file updates on: (1) the number of producers in those towns; (2) the number of stoves made and sold and at what price; and (3) the method by which stoves are sold, either directly by the producer or through a middleman. These reports chart trends which often reveal interesting aspects, such as that stove production drops sharply during Ramadan, and charcoal prices rise before the start of charcoal production season late in the year.

Regular reports on stove activities and production sent to other organizations are just one way to create an information flow among groups working with the same technology. The Renewable Energy Information Center, a component of the dissemination staff and housed in the same building as the Energy Research Council and SREP/RERI, also was established for that purpose.

The information center has a computer listing of organizations in the Sudan which have stove programs, where those projects are located and which stoves they promote. Agencies are encouraged to use the center's extensive collection of books, reports and microfiche on stoves.

In addition, the center has information resources on fuelwood/forestry, charcoal production, wind energy, solar energy and other renewable energy technologies.

The SREP/RERI Approach

The SREP/RERI staff initially focused on two dissemination methods to reach the consumer: publications and market demonstrations. Its list of publications include a stove pamphlet, one-page handouts showing how to operate the various stoves, two posters, and articles appearing in newspapers and "Sudanow."

It also has prepared material for producers (an El Duga stove manual and handouts citing stove dimensions), and circulated a report on the history of the El Duga stoves to libraries and agencies.

During this time, the staff developed contacts with artists (occasionally using student artists from Khartoum Polytechnic Institute) and two local printing firms, Afrograph and Sudan Publicity.

The staff learned that producing publications can be costly (pro formas for a printing job are advised because Afrograph and Sudan Publicity sometimes charge quite different prices), and can take time (staff members may have to visit a company as many as eight times during the printing process).

Market demonstrations also were time-consuming for the SREP/RERI staff, which sponsored more than 15 demonstrations.

Recently, the staff decided to experiment with different dissemination approaches, while not abandoning publications and demonstrations. It has commissioned preliminary work on a television commerical and has held slide shows/stove demonstrations in neighborhoods. It believes both of these media will put it in closer contact with the housewife.

Increasingly, the staff has become more attuned to the stove user, particularly following its work with a short-term marketing consultant and the attendance by five staff members at a marketing course at Georgia Tech Research Institute.

The SREP/RERI staff has learned that to carry out its dissemination role, it not only must talk to the consumer, it also must listen.

Important Points: For Information Dissemination

1. Recognize the value of the dissemination component of a program by allocating sufficient personnel and resources.
2. Before printing publications, determine the chief message, the audience intended and the distribution strategy.
3. Evaluate different dissemination methods to determine if they are a practical use of money and staff.
4. Take advantage of free press and media coverage.
5. Consider paid advertising. Do not automatically rule it out because of suspected high costs.
6. Talk with other organizations promoting improved stoves and establish a system for sharing information.

V. MARKET ANALYSIS

The ultimate judge of a new technology is not the engineer, but the consumer. At all steps in technology development - design, production, dissemination - the consumer's wants and needs should be considered.

In the case of charcoal stoves, the user is the housewife. Surveying traditional-stove users in Khartoum in 1985, a marketing consultant for SREP found that even on the infrequent occasions when the male head of the household purchases the stove, his selection usually reflects the request of the housewife.

Methods of soliciting housewives' opinions are limited in Sudan, because telephones are rare and most women do not work outside the home. The SREP/RERI dissemination staff has chosen household surveys as a means of collecting consumer data.

Identifying the Primary User

Conducting household surveys is time-consuming and manpower-intensive, therefore an organization will not want to expend energy interviewing people who will not be the primary users of the new technology.

In the 1985 Khartoum-area study cited above, two types of stove users were discovered: the generally higher-income group that uses butagas or electricity for cooking and relies on charcoal only as a secondary cooking fuel and the generally lower-income group that uses charcoal exclusively.

For improved stoves to reduce national charcoal consumption significantly, they have to be in homes where charcoal usage is frequent, i.e., homes where traditional stoves are used daily. The dissemination staff recognizes that if El Duga stoves are purchased mainly by upper-income groups who rarely use charcoal stoves, the new stoves will not fulfill the purpose for which they were designed.

Government census data or preliminary neighborhood surveys by a dissemination staff can help determine where the appropriate income groups for the new technology live and where household surveys should be conducted.

Types of Household Surveys

The SREP/RERI dissemination staff has conducted four different types of household surveys in the Khartoum area and has found that each has merits and limitations.

The **traditional-stove user survey,** where a staff member randomly selects homes in a lower-income neighborhood and interviews the housewife, yields valuable information about the new stove's "competition." From this survey, the staff can learn what characteristics the housewife likes or dislikes in the traditional stove, and how much she is willing to spend for a stove.

Among other things, SREP/RERI found from its traditional-stove user survey that the average household has two to three charcoal stoves, and it usually purchases two to three stoves per year. Typically, the housewife buys the traditional stove at the souk or at a charcoal depot ("zareba").

Because this type of survey does not entail testing new stoves in households, it is not expensive. On the other hand, it does not give the housewife direct exposure to a new stove.

A **comparative stove survey** was one type of household cooking test conducted by the dissemination staff. In this instance, the staff wanted to learn which of five different improved-stove models a housewife would prefer. The housewives cooked a typical Sudanese meal on a different stove model each day, then they delivered their verdict on which stove was best.

If an organization wants to focus promotion on one or two improved stoves and cannot decide which models, this survey is beneficial, but it does have drawbacks. If the sponsoring organization has to buy the stoves and transport them to the survey homes, the survey can be expensive and logistically difficult when carried out in many households. For very small-scale comparative stove surveys there also is a drawback: placement of a few efficient yet poorly made models can skew the findings.

A **short-term cooking survey** is very similar to the above survey, but a housewife uses just one improved-stove model for about a week. Consequently, she draws comparisons only between the traditional stove and the one new stove.

This survey is easy to conduct, not too costly, and it introduces an improved stove into the household. One week, however, may not be enough time for the housewife to become comfortable with the new stove and to notice an appreciable decline in charcoal usage. The dissemination staff held a short-term cooking survey immediately before the 1,000-Stove Survey to "rehearse" its survey format.

In a **long-term cooking survey,** the housewife uses one improved stove for at least a month. The results from a month-long survey reveal more about the stove's performance than a one-day or week-long test, which usually ascertain only the housewife's initial impression.

Of course, when done in many households, a long-term survey places heavy demands on an organization's staff and budget. SREP/RERI sponsored such a survey (the 1,000-Stove Survey) to amass solid data about consumer reaction to improved stoves.

Developing Questionnaires

Developing a survey questionnaire can be surprisingly difficult. Questionnaires for the 1,000-Stove Survey went through several revisions before they ever reached the surveyors. The dissemination staff analyzed the phrasing of each question so it would elicit the truest and most accurate response.

For instance, the housewife was asked what things she liked and disliked about the stove, with the surveyor not providing a list from which she could choose. In this way, the housewife's response reflected her judgment only.

Any factor especially critical to technology application should be raised repeatedly in a questionnaire, so the housewife's response becomes unmistakably clear. The SREP/RERI marketing consultant advised altering the wording of and spacing the similarly focused questions.

For example, the dissemination staff particularly wanted to know in the 1,000-Stove Survey if women thought they had saved charcoal with the new stove. To verify the accuracy of their response, the final questionnaire contained these questions, asked at different intervals in the questionnaire:

1. What characteristics did you like about the new stove? (This open question gives them the chance to cite "saves charcoal").

2. Did you notice any difference in charcoal consumption with the new stove as compared with the traditional stove?
3. Do you think you saved money in charcoal costs when using the new stove?
   (The answer to this question should correspond to the one for the preceding question).

In a large survey, the questions should be close-ended (i.e., yes or no), to facilitate quick compilation of results. SREP/RERI made even its open questions "closed" by inserting a list of responses the housewife most likely would say, so the surveyor simply could put a check by those points when mentioned.

For record-keeping purposes, certain data should appear on every completed questionnaire: date of survey, name of surveyor, name of housewife and her neighborhood, and stove model used.

Tips to Increase Survey Accuracy

Even surveys conducted by professional pollsters contain a margin of error. The dissemination unit has discovered some points which can help keep the margin of error down:

1. Keep the questionnaire fairly short. The staff's original traditional-stove user questionnaire was quite long, making the housewife anxious to conclude the survey.
2. Train surveyors to conduct the questionnaire uniformly so they do not influence the housewife's answers.

3. Avoid paying people to participate in surveys because that may influence their answers.
4. Record in the survey report if the stoves tested were poorly made. Many El Jiko ceramic grates cracked during the 1,000-Stove Survey not because the technology itself was flawed, but because of poor craftsmanship.

How to Handle Survey Data

Compiling and analyzing survey data can be tedious. The quicker the job is tackled, however, the more likely a findings analysis will emerge in a report form that can be disseminated to other stove projects.

Close-ended questions make this process much easier and they also allow an organization to enter the data into a computer, as SREP/RERI did with the 1,000-Stove Survey.

Survey findings can be useful for stove designers, producers and retailers, and can help an organization in charting its marketing course. The organization also may wish to publicize the survey results in the media.

Early Household Surveys

Although both the El Duga open-draft and the one-door El Duga stoves were tested in the lab, only the former also was tested in households during its developmental phase.

In 1983, the Ahfad University College for Women in Omdurman, working in conjunction with the Energy Research Council, conducted a stove survey in slightly less than 100 households in the Khartoum area. Ahfad had done previous small-scale surveys in which the El Duga open-draft had been found energy-saving and easy to use. The verdict in the 1983 survey was similar: an overwhelming majority of the housewives noted a savings in charcoal.

From 1983 until late 1985, no known household stove surveys were conducted in the Khartoum area. In retrospect, the dissemination staff realized that was a mistake. During the evolutionary stages of a new technology, a constant flow of consumer feedback is essential.

1,000-Stove Survey

So critical became the need for solid and updated market analysis, that the entire SREP/RERI dissemination staff, working with a budget of LS 50,000, devoted itself to organizing and overseeing a survey in 1,000 Khartoum-area households.

The survey had twin objectives:

1. to gather data on the acceptability or nonacceptability of three improved stove models;
2. to increase public awareness of improved stoves throughout the Khartoum area.

The second objective, in effect, involved dissemination of information about new stoves in the very neighborhoods where the primary stove audience lived.

Stoves Placed in the 1,000-Stove Survey

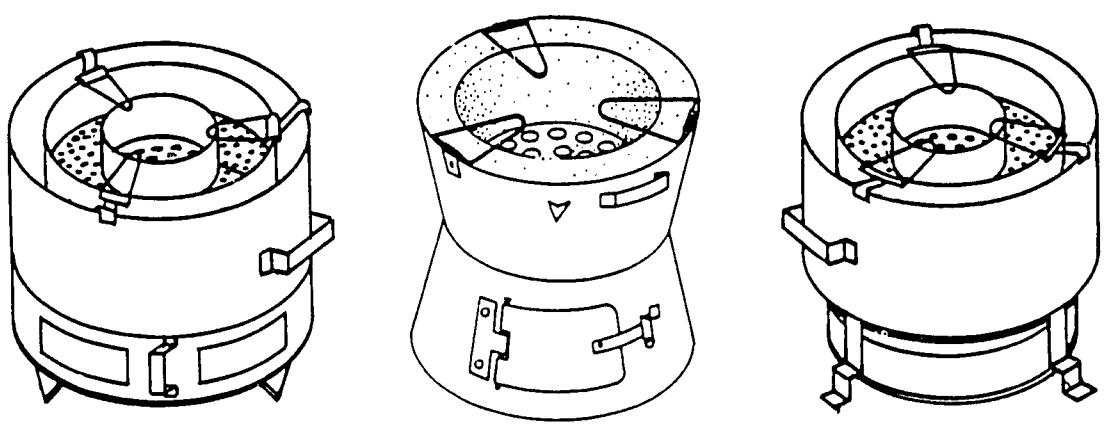

445 Households | 400 Households | 155 Households

The findings from this survey form the most substantial bank of data SREP/RERI has on improved stoves in Khartoum, and will be the basis on which it makes marketing decisions in the near future. Because of this expected impact, the methodology used and the findings reported in that survey are explored here.

How the 1,000-Stove Survey Was Conducted

The dissemination staff organized the survey, which ran from January to March 1986, in less than a month. The staff chose three stove models to test: the El Jiko, the four-door El Duga and the open-draft El Duga. The first two stoves were new designs for Khartoum and were not yet on the market. The open-draft El Duga dominated the improved-stove market in Khartoum, and the staff desired more consumer data on it.

Over 25 producers in the New Industrial Area made the four-door and the open-draft El Duga stoves, receiving LS 15 and LS 13 from SREP per respective stove. About 10 Omdurman metalworkers built the El Jiko shells, for LS 10 each, and an Omdurman potter made unglazed ceramic grates for LS 1.50 apiece, cementing them into the shells for an additional LS 0.50 each.

Five lower-to-middle-income neighborhoods in the Khartoum area were selected on the map. In the survey, 84 percent of the participating households had a monthly income below LS 600.

The plan called for hiring 10 women surveyors from each of these five neighborhoods. Each of the 50 surveyors then would select 20 households near her home to participate. For five weeks, the 1,000 households would use one improved-stove model.

The dissemination staff hired the surveyors through a fair and open hiring system. An advertisement ran in the newspaper, and all applicants were interviewed by a team of dissemination staff members. SREP/RERI considered a surveyor's familiarity with her neighborhood more important than her formal education. Each surveyor attended a two-day training course sponsored by SREP/RERI to learn about improved stoves and her duties during the survey. For the survey, the staff paid each surveyor LS 400.

All phases of the 1,000-Stove Survey were done on a modular scheduling basis to ease the pressure on the producers as well as the staff. Thus, the survey began in one neighborhood the first week in January, in another neighborhood the second week in January, etc. Modular scheduling has a flexibility which permits minor changes and postponements without causing a major disruption.

The surveyors paid weekly visits to the housewives, asking them a different set of questions each week. Also, the surveyors visited the SREP/RERI office weekly, submitting their questionnaires and informing the staff of any problems. To keep from being swamped by the incoming questionnaires (5,000 in all from the survey), the staff tried to tabulate the results as soon as the questionnaires arrived at the office.

At the end of the five weeks, the housewives were told they had the option of buying the stoves. The dissemination staff sold the stoves at half-price; LS 8 for a four-door or open-draft El Duga stove and LS 6 for an El Jiko. These prices still represented more than what the housewife would pay for a medium-size traditional stove (LS 3 to 4). **Given the option, 96.2% of the households bought the improved stove.**

Survey Findings

The 1,000-Stove Survey provided the dissemination staff with its most comprehensive data on consumer reaction to improved stoves. Among the important findings were the housewives' observations on charcoal consumption:

Charcoal use during survey	Four-door	El Jiko	Open-draft
Went down	89%	91%	89%
Stayed same	11%	9%	11%
Increased	0%	0%	0%

The housewives saw a correlation between the use of energy-efficient stoves and the saving of money. At the end of the five weeks, 58 percent of the housewives said they had saved more than LS 4 in charcoal costs, with another 21 percent saying they thought they had saved at least LS 3.

In the survey's final week, the housewives were asked what they liked about the model they used, particularly in comparison to the traditional stove. Because the housewives gave multiple answers to this open question, the total percentage exceeded 100 percent:

Reasons they liked four-door El Duga	%
Saves charcoal	89%
Sturdier, more stable	42%
Cooks food better	42%
Able to control heat	40%
Easy to use	36%
Cooks food faster	23%

Reasons they liked El Jiko	%
Saves charcoal	94%
Easy to use	53%
Cooks food faster	51%
Cooks food better	50%
Able to control heat	43%
Sturdier, more stable	33%

Reasons they liked open-draft El Duga	%
Saves charcoal	92%
Sturdier, more stable	42%
Cooks food better	39%
Easy to use	33%
Cooks food faster	31%
Able to control heat	22%

The main criticism of the El Duga stoves was that they were difficult to light. Most complaints voiced by the El Jiko users were related to the craftsmanship of the stove. Eighty percent, or 319 households, said their stoves (ceramic grates) broke during the survey.

Because the four-door El Duga and the El Jiko stoves represented new technologies in Khartoum, their production was far from refined at the time of the survey. The metal sleeve on the four-door El Duga was hard to slide on some models placed in households. Production quality problems were more serious with the El Jiko.

Both the metalworkers building the shells and the potter making the ceramic grates were new to El Jiko production. This was reflected in many El Jikos placed in the survey. The dissemination staff realized at the outset it was running the risk of alienating consumers by widely placing two new stoves - the four-door El Duga and the El Jiko - in households before wrinkles in production had been carefully ironed out. The staff decided, however, the need for consumer data and the incentive the big order would give to producers offset the risk.

The survey did have a beneficial impact on Khartoum-area stove production. Former El Duga producers returned to the Industrial Area - and to their craft - to take advantage of the demand for stoves.

Because the cost of improved stoves had been considered a barrier to sales in Khartoum, the housewives were asked how much they would be willing to pay for such a stove at the market. They responded:

What housewife will pay for four-door El Duga	%
LS 5 - 7	64%
LS 8 - 10	29%
LS 11 - 13	7%

What housewife will pay for El Jiko	%
LS 5 - 7	71%
LS 8 - 10	22%
LS 11 - 13	7%

What housewife will pay for open-draft	%
LS 5 - 7	54%
LS 8 - 10	30%
LS 11 - 13	16%

Also, the housewives were asked to rank what they considered the most important factor to them in their cooking activities. Interestingly, they said:

Most important factor in cooking activity	%
Time	64%
Fuel conservation	28%
Cost of stove	8%

From all the survey findings, SREP/RERI was able to draw some conclusions and make projections.

Analysis of Survey Findings

The El Jiko may have greater marketing potential in the Khartoum area than the El Duga stoves, the survey findings indicate.

Twenty-nine percent of the housewives testing the El Jiko were willing to pay LS 8 to 10 for the stove. According to SREP/RERI calculations, that would be a fair price for the stove as a Khartoum producer selling an El Jiko for LS 8 to 10 would make a reasonable profit. El Jikos are not yet available in Khartoum-area markets, but when they finally do appear they initially might be priced as high as LS 15. Because that high price does not reflect the relatively low cost of the materials, it is probable consumer reaction to the steep LS 15 will force the price down.

On the other hand, SREP/RERI does not expect the current price (LS 12 to 15) for the all-metal El Duga stoves to change in the near future. That price poses a marketing obstacle as only 7 percent of the housewives testing the four-door El Duga and just 16 percent of the housewives using the open-draft stove said they would be willing to pay as much as LS 11 to 13 for those stoves.

Price is not the only factor in the El Jiko's favor. The survey revealed that housewives are eager to reduce their cooking time, and 51 percent of the housewives cited "cooks food faster" as an attribute of the El Jiko, as opposed to 23 percent saying that about the four-door El Duga and 31 percent remarking the same about the open-draft stove.

The main criticism leveled at the El Jiko was that it was "poorly made," - a problem likely to diminish once producers become more familiar with the stove. For the El Duga stoves, however, the users complained the stoves were hard to

light, which signifies a more intrinsic problem. The open-draft El Duga, for instance, is easier to light indoors (away from a breeze) than outdoors, but that may not coincide with a housewife's preference of where to cook.

Of the El Duga stoves, the survey indicates sales of a LS 12 to 15 open-draft stove would be much greater than sales of a similarly priced four-door stove. It is difficult to ascertain from the survey why that would be the case, but the dissemination staff has observed over the past two years a consumer preference for the appearance of the open-draft El Duga stove.

Stoves and the Marketplace

Surveys and other dissemination methods intended to boost improved-stove usage can have only limited success if the stoves are not available in the marketplace. Such has been the case in the Khartoum area.

Even after two years of stove promotion by SREP/RERI, unless a consumer knows a producer, attends a stove demonstration or visits Souk Assegana, he likely will not be able to find an El Duga stove in Khartoum.

Market-goers in El Obeid, however, can locate stoves more easily because a prominent shop owner in the souk hires producers to build stoves right in his shop.

Promoting the establishment of similar store/workshop combinations in Khartoum is not easy because a stove maker's profit is so affected by how the stove is marketed. For example, an El Duga producer in Khartoum now can earn, per stove:

LS 15 when selling at a stove demonstration,
LS 12 when selling directly to a person on the street,
LS 8 when selling to a retailer.

Obviously, producers appreciate the opportunity to sell their stoves personnally at market demonstrations, but a dissemination unit cannot host such demonstrations indefinitely because of the demands on staff time. In the long run, for a new stove to truly challenge the traditional stove, it must be available at the market as is the older model.

Previous, albeit random, efforts have been made by SREP/RERI to draw market retailers into the circle, such as by inviting them to closing day ceremonies of a stove producer workshop or by hosting a stove demonstration at a shop.

A comprehensive plan is needed, advised SREP/RERI's marketing consultant, recommending a retailer training program be developed and implemented.

The retailer should know:

1. **the advantages of new stoves over a traditional stove;**
2. **techniques for selling improved stoves; and**
3. **how a good-quality stove should look.**

Retailers could serve, in effect, as quality-control managers, refusing to purchase stoves with, for instance, poorly made firegrates.

The dissemination staff also was urged to experiment with the marketing of El Duga stoves at neighborhood corner shops. Currently, stoves are not sold at these corner shops in Khartoum, but in a survey housewives indicated these shops would be the most convenient places to buy stoves.

Market Projections

Analyzing the potential market for a new technology can give an organization a valuable overview and help it set goals.

One SREP consultant drew up stove market projection figures for the Khartoum area using 1983 government census data and previous studies done by the National Energy Administration and the dissemination staff.

The charcoal stove market in Khartoum area, already large, will grow, the study said. If population trends continue, there will be 155,612 households in the Khartoum area in 1987 and 170,040 households by 1990. In that the average household now purchases two to three charcoal stoves per year (or two and a half stoves), it can be projected that stove sales will total 389,030 in 1987 and 425,100 in 1990.

Of the estimated 366,200 charcoal stoves sold in the Khartoum area in 1985, it was calculated, using SREP/RERI's monthly stove sale figures, that **El Duga stove sales totaled approximately 6,600 for a 4.5% share of the Khartoum-area market.**

Increasing the market share is the challenge facing any organization promoting a new technology. Targeting realistic growth and mapping out methods of achieving that growth can help an organization reach its goals.

nportant Points: For Market Analysis

1. Determine the primary audience for the technology. Listen to the user. Find out the user's likes and dislikes about the technology.
2. Conduct comprehensive surveys that will provide a reliable and substantial bank of information from which to draw conclusions.
3. Disseminate survey findings both in-house and among other stove programs.
4. Use those survey findings as a guide when developing a marketing approach.
5. Recognize the ongoing need to conduct surveys during the developmental stages of a new technology.
6. Try to enlist the support and enthusiasm of retailers in marketing the technology.
7. Calculate the new technology's current share of the market and its potential for growth.

VI. CASE STUDIES

To paraphrase an ancient proverb, success has a thousand fathers, but failure is an orphan. It may be unpleasant to acknowledge mistakes, but as much can be learned from mistakes as from successes.

Since 1984, the information dissemination unit has been introducing El Duga stoves to towns throughout Sudan by way of stove-producer training workshops. Sometimes this strategy has worked well; other times it has not. The failure typically has stemmed not from the actual workshop, but from inadequate pre-planning and inconsistent follow-up.

Here is a check list to keep in mind when considering the introduction of a stove to a town:

1. Stove producers. Are there traditional stove producers or other metalworkers in the town? What is their skill level? Are they willing to switch to the production of a more complicated stove design? Are they located near a market? If introducing the metal-ceramic stove, are there skilled potters in the town, or people willing to be trained?

2. Suitability of stove. Do the people principally use wood charcoal, butagas or electricity as their cooking fuel? If they use charcoal, is the price of a sack of charcoal relatively expensive or relatively cheap? Is there a strong preference for an all-metal stove over a metal-ceramic stove? How much do people typically spend for a stove? Would they be able and willing to pay the price likely to be charged for the new stove?

3. Availability of raw materials. Is there a constant supply of suitable scrap metal in town? If introducing a metal-ceramic stove, is there a constant supply of suitable clay for the ceramic liner? How expensive is scrap metal in that town?

Previous Page Blank

4. Organizational support. Is there an organization in the town willing to help sponsor a stove workshop? Will that organization monitor stove production for at least one year after the workshop, paying monthly visits to the producers?

How thoroughly these questions are answered can spell the difference between success, partial success or disappointment.

Khartoum: A Success Story

The largest contingent of full-time El Duga stove producers throughout Sudan can be found in Khartoum's New Industrial Area. During production for the 1,000-Stove Survey, more than 25 men were making stoves along "El Duga row."

Although the number of producers has fluctuated since the first stove workshop was held there in November 1984, there never have been fewer than 10 producers.

Reviewing the check list, it becomes apparent why the stove program has succeeded in the Industrial Area:

1. The producers are fairly skilled metalworkers who have chosen El Duga production because they find it profitable.

2. Khartoum represents a large charcoal stove market. The people use all-metal stoves, and while the El Duga stove is too expensive for some people, many families can afford to pay the initially high price. One disadvantage for the Industrial Area producers, however, is their distance from a market. Thus, the stoves basically are available only one souk, that closest to the Industrial Area but still almost three kilometers away.

3. A fairly constant supply of scrap metal is available mainly because of a concentration of workshops which produce metal doors, windows, etc.

4. SREP/RERI staff members visit the producers at least once a week. Although many dissemination activities have benefited the producers, they remain independent entrepreneurs, appreciating the dissemination unit's help but not relying on the unit.

Over the years the quality of stoves produced in the Industrial Area has improved markedly. Where once the producers adamantly refused to work together, there are now small clusters of producers who make stoves in an efficient assembly-line fashion.

Abu Galfa: Only Partial Success

The information dissemination unit ranks the case of Abu Galfa as falling between success and failure. While the stove program there has not matched the record established in the Khartoum Industrial Area, it has managed to survive despite obstacles.

Some of those obstacles, not fully taken into consideration when the stove workshop was held in the village in February 1985, are:

1. The stove producers formerly made knives, which do not demand the same metalworking skills as stoves. Thus, some trained producers later reverted to producing the more easily made knives. On the plus side, a few village men continue to pursue stove production, working at a common site and cooperating with each other in securing metal.

2. While metal charcoal stoves are used in Abu Galfa, the villagers have very modest incomes and most have found the El Duga stove too expensive. The producers thus are forced to transport their stoves over considerable distances to larger markets (e.g., Wad Medani, Rufaa, Hasahesa).

3. Not surprisingly, there is insufficient scrap metal in the small village of Abu Galfa, so the producers must go to nearby Rufaa or Wad Medani for metal. Not only must they then pay transportation costs, but they also have found metal expensive in those towns. They even have been importing scrap metal from Omdurman. The struggle to locate affordable has been the most difficult hurdle for the producers.

4. PLAN Sudan, the organization which sponsored the workshop with the help of a SREP grant and technical assistance, has an office in Abu Galfa, itself. The plan staff there has helped producers in marketing the stove and in efforts to locate metal suplies. Monthly, the staff documents the program's progress by writing a production report.

Although more than 15 men were trained in the Abu Galfa workshop, currently there are only three producers. Their monthly output figures, however, are consistent.

That production continues in spite of obstacles inherent in an isolated village's program, demonstrates the positive impact a locally based organization can have on a stove program.

Kosti: An Unsuccessful Attempt

Kosti certainly does not stand alone among towns where a producer-training workshop has not led to sustained improved-stove production. The reasons vary with the towns, but often there are two common denominators: poor selection of workshop trainees and failure to provide them sufficient help and encouragement after the workshop.

The Forestry Department in Khartoum, operating with a SREP grant, sponsored the workshop in Kosti in 1985. Kosti was an appropriate choice for a workshop because it is an urban center and housewives there use charcoal stoves. Those factors, however, were not enough to overcome these barriers:

1. **The participants selected for the workshop were not ideal candidates. They were youths working in semi-formal-sector workshops who lacked experience collecting scrap metal and marketing a finished product. Both those factors could have been solved with education, but the established workshop format does not treat these topics extensively.**

2. **The timing was unfortunate. The workshop was held during the peak of agricultural season, when metal-workers find it more profitable to make farm tools. After the workshop, the newly trained stove makers returned to tool production.**

3. **No organization in Kosti was willing or prepared to oversee the development of the El Duga stove program following the workshop.**

When extenuating circumstances (such as trainee inexperience or a conflicting schedule) are discovered late, an organization's flexibility is tested. The staff may have to reverse earlier decisions and revamp the workshop, postpone it or cancel it altogether.

Even a poorly timed workshop can be salvaged, however, if a local staff monitors the new industry through frequent visits to the trained stove makers. The staff can help producers locate metal, introduce them and the new stove to retailers, sponsor market demonstrations, etc.

Of course, a Khartoum-based organization will be unable to conduct an adequate follow-up unless it transfers staff to the workshop town or locates people already living there willing to take this responsibility. SREP/RERI considers the latter approach more practical, especially since the follow-up phase could require years of effort.

Nowhere in Sudan has a newly introduced improved stove achieved "instant success." That is an unrealistic expectation for a new technology. SREP/RERI has learned "success stories" occur only when technology dissemination is undertaken by people who are provided adequate resources and who, more important, have a sustained commitment to succeed.

APPENDIX A

Stove Programs Throughout Sudan

Improved stoves have been introduced to many towns in the Sudan. Although the SREP/RERI dissemination unit is not fully aware of all the country's stove programs, it lists here those towns of which it has specific knowledge.

This information could be valuable to organizations contemplating introducing a stove into a town and wondering if such a step already has been taken. It should be emphasized, however, that simply because a workshop was held in a certain town in 1985 will not ensure that metalworkers there will be producing the stove in 1987.

The following towns are listed in alphabetical order.

Abu Galfa

This village, located near Rufaa in central Sudan, is among the more than 60 villages in the Gazera in which PLAN Sudan-Wad Medani operates.

More than 15 metalworkers were trained in a formal workshop in February 1985 to make both the open-draft and one-door El Duga stoves. Today, the village has three El Duga stove producers working in association. They frequently sell stoves (they make only the open-draft El Duga) in Wad Medani, Rufaa and Hasahesa.

PLAN Sudan, which sponsored the workshop with the help of a SREP grant and staff, is interested in improved-stove production for the environmental impact and for potential job and income generation. PLAN Sudan also has expressed interest in promoting the less costly metal-ceramic stove, but preliminary checks show not all eastern Gazera villages have access to clay. (For more information, see "Abu Galfa: Only Partial Success," in Chapter VI.).

Ed Duem

The Adventists Development and Relief Agency (ADRA), anxious to introduce efficient stoves into the White Nile town of Ed Duem, conducted a survey there in 1986 to determine which stove would be most appropriate.

After analyzing metal availability, the use of charcoal and the cooking habits of the housewives, ADRA decided there was potential for the El Duga stove in Ed Duem.

SREP/RERI facilitated the training of one ADRA representative in how to organize a stove-producer workshop. A workshop in Ed Duem is planned for mid-1986.

ADRA's central office in Sudan is in Khartoum, but it also has an office in Ed Duem, a factor which improves the chances that this stove program will succeed.

El Obeid

El Obeid in the Kordofan has one of the most developed stove programs in Sudan. The El Jiko, the one-door El Duga and an all-ceramic stove are visible on the market.

CARE Sudan administrates the stove program there, which was aided by a SREP grant and the full-time assignment of Kevin McNally, a Peace Corps volunteer with the dissemination unit.

El Obeid stove producers have been able to offer stoves at lower prices than producers in other parts of Sudan, mainly because their source of metal is the large supply of barrels available in the Kordofan. For instance, an El Jiko which might cost LS 10 to 12 in Khartoum would cost LS 6 to 8 in El Obeid. The El Duga stove (only the one-door model is available) also sells for less in El Obeid than in other places.

CARE promotes stoves through producer workshops, souk demonstrations, radio announcements and a stove poster. This current production/dissemination approach reflects a decision by CARE to move away from an earlier direct role in stove manufacturing.

Gedarif

CARE has a stove program in Gedarif, in eastern Sudan, which is trying to duplicate the success enjoyed in El Obeid.

Both the El Jiko and the one-door El Duga stove are produced in Gedarif, but on a limited basis. Metalworkers have been trained, but the number of stove makers there remains low.

Towns in Sudan Where Improved Stoves Have Been Introduced.

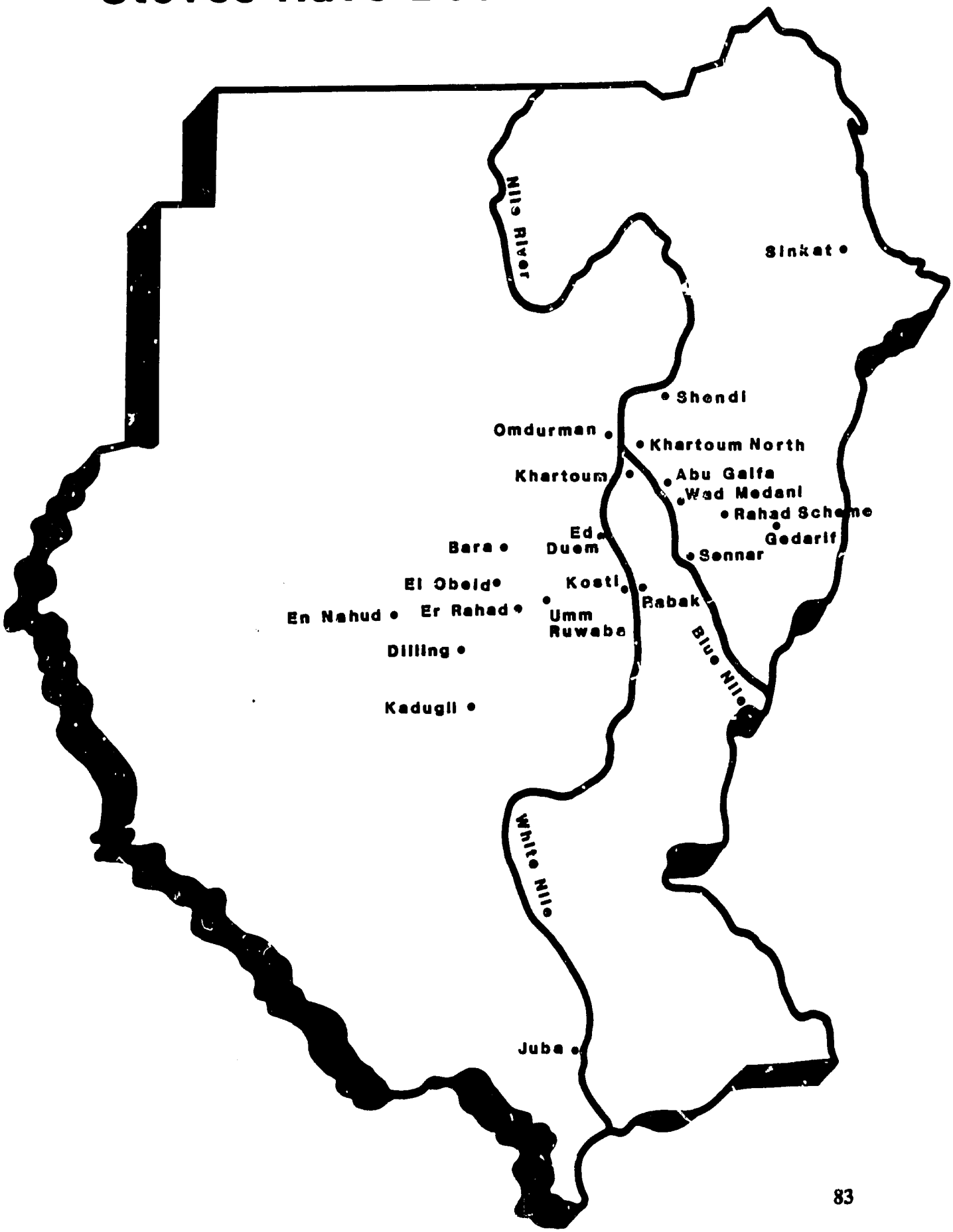

CARE in Gedarif distributes stove publications (e.g., handouts, posters) and monthly writes a report documenting the program's progress.

Juba

The open-draft and the one-door El Duga stoves were introduced to this southern Sudanese city through a workshop held in Khartoum in March 1985. A SREP grant to Euro-Action Accord, which has a stove program in Juba, enabled one stove producer and two workshop organizers from Juba to attend the training session in Khartoum.

The director of the SREP/RERI dissemination unit visited Juba in 1985, but the unit does not have up-to-date reports on the status of the stove program there.

Earlier, a more elaborate and more expensive metal charcoal stove, promoted by a United Nations agency, was introduced in Juba. Production and sales figures for that stove, which was partially subsidized, are not known.

Khartoum

If El Obeid is the home of the El Jiko in Sudan, Khartoum is the home of the El Duga stove. Two formal stove workshops, one in November 1984 and another in March 1985, have been sponsored by SREP/RERI in Khartoum.

Gamal Sharbaak, winner of the El Duga stove design contest in 1984, has a metal workshop in Souk Ashabi, but he now makes air coolers instead of stoves. However, Gamal, a highly skilled metalworker, still produces prototypes of stove designs upon request.

Current El Duga stove producers are located on either side of the railroad track in the New Industrial Area, working out of homemade shelters. A couple of Industrial Area producers have served effectively as trainers in stove workshops held outside Khartoum.

Typically, about 325 El Duga stoves are produced each month in the Industrial Area; the El Jiko is not currently made in Khartoum.

The El Duga stoves can be found at several shops in Souk Assegana and sometimes at the Friday market in downtown Khartoum. Demand exceeds supply in Khartoum, so producers are able to sell all their stoves. The El Duga stoves'

price has remained steady, at LS 12 to 15. (For more information, see "Khartoum: A Success Story," in Chapter VI.).

Khartoum North

Traditional stove makers working in open areas near the Coca-Cola and Union Carbide plants in Khartoum North were trained in a formal workshop sponsored by SREP/RERI in March 1985.

The stove makers near Coca-Cola soon reverted to producing the traditional stove or moved to another location. The producers near Union Carbide continued to make the stove, albeit very sporadically.

In both instances, the distance from the souk and their unfamiliarity with marketing the stove were obstacles for the newly trained producers.

Although SREP/RERI-sponsored market demonstrations in Khartoum North have been successful, neither the El Duga nor the El Jiko stove (which is not made in Khartoum North), are available at markets in this town.

Kordofan

Improved stoves have been introduced into a number of Kordofan towns by CARE. Metalworkers in Dilling, Bara, Kadugli, En Nahud, Er Rahad and Um Ruwaba have been trained to make the El Duga stove.

The El Duga stoves produced in the Kordofan are principally the one-door model.

Kosti

The Forestry Department in Khartoum was awarded a SREP grant to sponsor a producer-training workshop in this White Nile town in 1985. Fifteen trainees were selected to participate.

Although the trainees made both the open-draft and one-door models of the El Duga, it is doubtful El Duga stoves still are being made in Kosti. (For more information, see "Kosti: An Unsuccessful Attempt," in Chapter VI.).

Omdurman

Omdurman has been the site of both a formal workshop (November 1984) and an informal workshop (September 1985). Despite this, there are no known, consistent producers of El Duga stoves in Omdurman.

Participants in the first workshop were mostly semiformal-sector metalworkers located near Souk Ashabi. Not long after training, they resumed making metal doors.

For the informal workshop, traditional-stove makers who worked in a cemetery were trained. Unfortunately, within several months after the workshop they no longer were producing improved stoves, reverting to the more easily made traditional stove constructed out of more readily available cheap scrap material.

El Duga stoves have been available upon occasion at Souk Ashabi and Souk Omdurman. Also, stove demonstrations have been held in both those markets, so Omdurman consumers are somewhat familiar with the stoves.

The El Jikos produced for the 1,000-Stove Survey were made in Omdurman. However, a network between potters and metalworkers there has not been firmly established yet, and the El Jiko is not available in Omdurman souks.

Rabak

A community group from Rabak, a small White Nile town near Kosti, came to Khartoum in 1985 to request that a stove-producer workshop be held there. Although Rabak was not on the original list of workshop towns stipulated in the SREP grant to the Forestry Department in Khartoum, it was agreed the Forestry Department would host a workshop there.

Rabak producers were trained to make both the one-door and the open-draft El Duga stoves. The present stove production status in Rabak is not known.

Rahad Scheme

SREP supplied both a grant and personnel to help launch a stove program in Village No. 10 in the Rahad Agricultural Scheme in east-central Sudan. Market and household surveys were conducted to determine which stove was most suitable for the area.

Then in May 1986, the dissemination unit, working with villagers, helped host a stove workshop at which 15 men were trained to make the El Duga stoves.

There is optimism the stove program will develop in Rahad, in part because preliminary surveys revealed that more than 90 percent of the people use charcoal (most buying it in sacks and thus having duga), and that people purchase stoves locally instead of importing them from nearby Wad Medani.

Furthermore, SREP/RERI has developed a counterpart system in Rahad, which is expected to continue monitoring the stove program's progress.

Sennar

Twelve metalworkers were trained to build El Duga stoves at a workshop in the Blue Nile town of Sennar in August 1985. The Forestry Department in Khartoum conducted the workshop with the aid of a SREP grant.

One feature of the Sennar workshop was the notably high quality of stoves produced.

Because it has received no follow-up information from Sennar, the SREP/RERI dissemination unit does not know the current status of the stove program there.

Shendi

Two, week-long stove-producer workshops occurred in Shendi, a northern town on the Nile River, in April 1985. The Adult Education Center in Shendi sponsored the workshops with the help of a SREP grant and personnel.

During those two weeks, the SREP/RERI dissemination unit staged 18 stove demonstrations before community groups and in the market.

Before leaving Shendi, the dissemination unit, together with the Adult Education Center, arranged for three additional training workshops, including one later held in the local prison.

The framework for the establishment of a stove producers union in Shendi was developed in April 1985, but the union was short-lived, probably due in part to inadequate outside organizational support.

Initial efforts also were made then to introduce the El Jiko. Potters and metalworkers in Shendi experimented with the stove, but as far as the dissemination unit knows, the El Jiko is not produced in Shendi.

There has been a lack of regular reporting from Shendi, so SREP/RERI does not know the status of the stove program.

Sinkat

UNICEF financed a week-long formal workshop in May 1986 in Sinkat, a town near Port Sudan which is a transportation hub for buses. The regional forestry office in the Red Sea Province conducted surveys to assess the feasibility of stove production there, and SREP/RERI provided technical assistance during the workshop.

Thirteen metalworkers and 10 students from a trade institute were instructed how to make the open-draft El Duga and the four-door El Duga. The four-door El Duga stoves made at the workshop were without the sliding metal sleeve, because: this is an easier design for beginners; it reduces the cost of the stove which may prove helpful when introducing it into a community; and evidence from the 1,000-Stove Survey showed the typical housewife did not utilize the sliding sleeve.

Wad Medani

The Forestry Department in Khartoum, equipped with a SREP grant, held a formal stove workshop in the central Sudanese town of Wad Medani in 1985. Fifteen participants were trained to make both the open-draft and the one-door El Duga stoves.

Four of the trained stove makers continued to make stoves, but on an orders-only basis.

Although the El Duga stove typically is not available in the Wad Medani market, the public is somewhat familiar with the stove because it has been shown on the local television news several times.

Consumers wanting to purchase stoves have been placing orders at the forestry office in Wad Medani. The orders are relayed to the stove makers, so the forestry office has become, in effect, a go-between for consumers and producers.

Specific stove production figures for Wad Medani are not known.

APPENDIX B

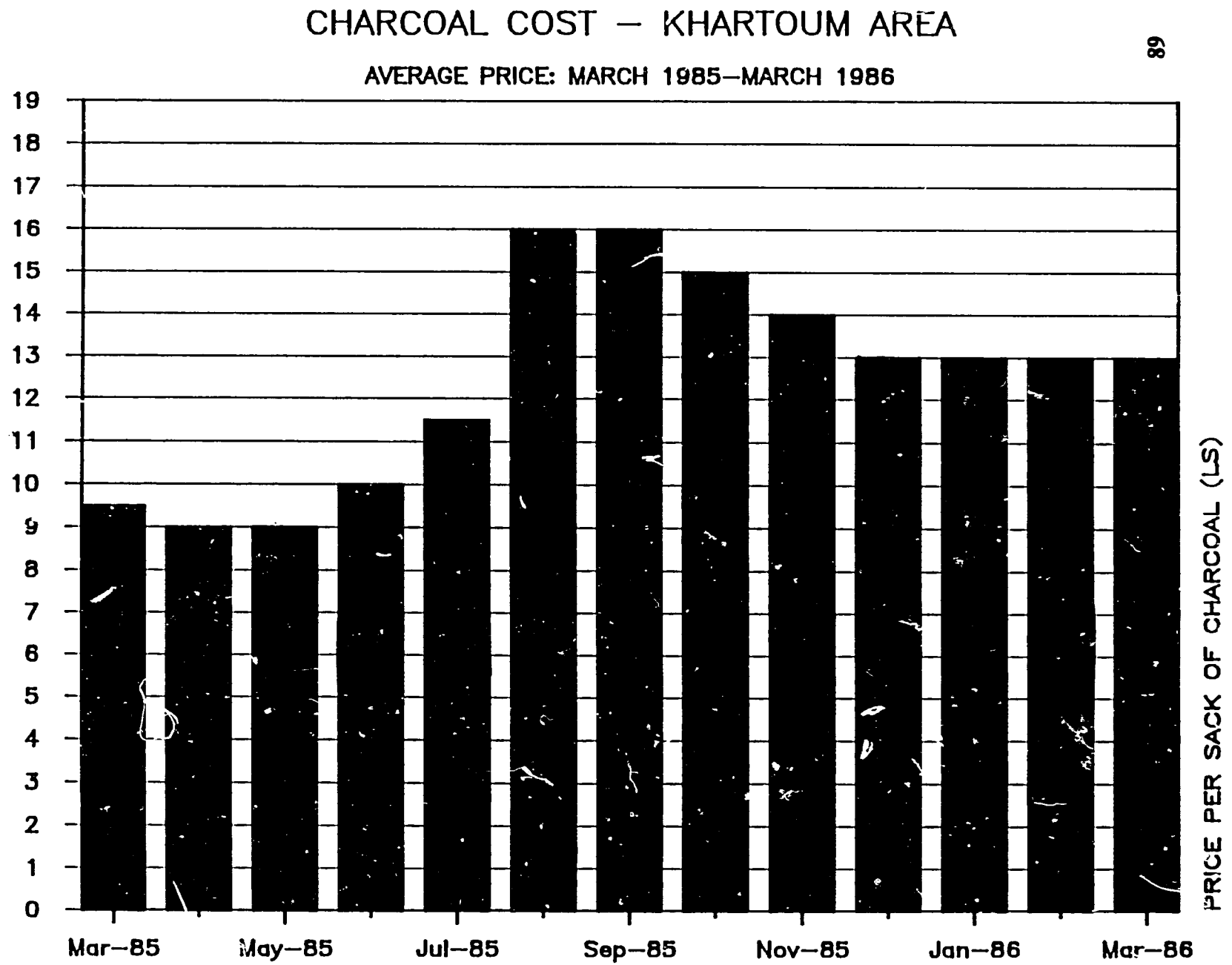
CHARCOAL COST – KHARTOUM AREA
AVERAGE PRICE: MARCH 1985–MARCH 1986
PRICE PER SACK OF CHARCOAL (LS)
0
1
2
3
4
5
6
7
8
9
10
11
12
13
14
15
16
17
18
19
Mar–85
May–85
Jul–85
Sep–85
Nov–85
Jan–86
Mar–86

APPENDIX C

Cost Analysis of El Duga Production in the Informal and Semiformal/Formal Sector

In 1985, with the assistance of a Georgia Tech Research Institute consultant, SREP/RERI conducted semiformal surveys to determine the feasibility of stove production in the informal and semiformal/formal sectors of industry. The dissemination unit visited a small, select number of producers in each sector. For both sectors, the dissemination unit did a cost analysis of the stove to see at what price the stove might be produced.

The informal producers, many of whom make traditional stoves, usually work alone or in pairs. These producers do not object to using scrap and have no workshop overhead or machinery costs, thus they can produce the new stoves at costs cheaper than the semiformal/formal sectors. And because they do work with scrap, they have more flexibility in using thinner, cheaper metal for parts of the stove that need less strength.

Most workshops do not have this flexibility because they employ new sheet metal where the thinnest gauges cost more, not less. Workshops produce stoves at a higher price not only because of high material expenses, but because they have overhead costs.

One-man El Duga Manufacturer (Informal Sector)

		% of Selling Price
Material (scrap) (1/2 of the metal used is thin, 1/2 of the metal thick)	LS 5.20	49%
Labor		
2 hours at LS .75/Hour	1.50	14%
2 hours metal search	1.50	14%
Overhead	0.00	
Manufacturing Cost	LS 8.20	
Profit at 30%	2.46	23%
Probable Selling Price	*LS 10.66	100%
Cost with LS 2 to middleman	*LS 12.66	

Previous Page Blank

The two-hour production figure was determined by the GTRI consultant when he timed a very skilled Khartoum producer. A two-hour metal search was included in the cost analysis because these producers have no workshops nor means of transportation, so they must spend much of their time looking for scrap.

Usually, large-scale production in the more formal sectors can be done at a cheaper cost because larger material purchases bring the price of the product down. But in Sudan, the practice of lowering the price with larger orders is not as common. Consequently, if the semiformal and formal sectors bought sheet metal for the production of about 450 stoves per month there would be, at most, an estimated 6.25 percent reduction in metal costs if purchased locally. Purchasing metal from abroad may significantly reduce material costs, but this prospect may prove unworkable for the endeavor would require high capital risks and a stable government import policy.

El Duga Workshop Manufacturer

		% of Selling Price
Material (new sheet metal)	LS 11.25	63%
Labor		
2 hours at LS .75/hour	1.50	8%
Overhead	1.00	5%
Manufacturing Cost	LS 13.75	
Profit at 30%	4.13	24%
Probable Selling Price	*LS 17.88	100%
With LS 3 to middleman	*LS 20.88	

Material costs were determined from November 1985 prices for a sheet of 120-by-240-centimeter medium-gauge metal. One sheet usually cost LS 48 but with the production of 45 stoves per month from 113 sheets of metal, one sheet was estimated to cost LS 45. One sheet produces about four stoves. The figure of 450 stoves per month was chosen as an average of the semiformal and formal sectors. For current El Duga models with parts (the seams) that require work done by hand, that is a reasonable estimate considering the time involved. SREP/RERI bases its estimates from having worked with a Khartoum workshop that has made stoves for a few small orders.

From the above charts for the El Duga stoves, workshop production is shown to be more expensive than with the one-man production scheme. The workshop stove is so expensive that it is not competitive with the LS 4 traditional stove. SREP/RERI's 1,000-Stove Survey indicates that less than 20 percent would purchase even a LS 12 open-draft El Duga stove, let alone a LS 17.88 stove.

APPENDIX D

Cost Analysis of Traditional-Stove Production in Khartoum

The outer shell of an average-size traditional stove is made from about four to six medium-size milk cans, or 8 to 12 small milk cans. The traditional stove producers can usually find these small cans, and sometimes the medium-size ones, at no cost. If not, they can buy these tins at special tin depots (Souk Omdurman, for example), in regular metal depots or sometimes in an ordinary souk (Souk Assegana). The small tins cost about 5 piasters and the medium ones cost between 10 and 25. Other types of tins, such as oil and paint containers, are also available at prices from LS 3.50 - 5.00.

For the grate, producers either use bands of metal used to transport cotton and bedding or they cut tins into thin strips. The strips, if cut from tins, cost nearly nothing but the grate can cost about 10 piasters if the bands are purchased.

Usually, each producer has his own mix of free and purchased tins, thus his profit can vary greatly. Those who purchase all of their tins will pay LS 1.30 for materials and will make about 1.20 to 2.70 in profit if they sell the traditional stove between LS 2.50 and LS 4. That assumes they buy six tins at 20 piasters each and 10 piasters worth of band for the grate. Using different types of tins, the stove producer makes the following profits:

Traditional Stove Costs By Tins Used

Tins:	small milk	medium milk	used oil
Cost:	free or 5pt	10 to 25 pt	LS 3.50
Tins/stove:	12	7	1
Selling cost:	LS 3.00	LS 3.00	LS 4.00
Profit/stove:	LS 2.70 avg	LS 1.65 avg	LS 0.50
Stoves/day:	4	6	14
Profit/day:	LS 10.80	LS 9.90	LS 7.00

The important point of this chart is to illustrate the ease of production and high daily profits from producing the traditional stove. Averaging the daily profits and assuming the producer will spend two days a week procuring tins indicates that he could make about LS 200 a month by building these stoves, and an additional

LS 150 as he becomes more skilled. The work requires little skill and few tools and returns a good profit, so in terms of production, **the traditional stove proves to be a tough competitor.**

APPENDIX E

Metal Supply and Use in Stove Production

Before an organization introduces a stove it first must consider the local availability of metal. Different types and gauges of metal should influence which stove should be supported. In general, the El Duga open-draft is best for large supplies of narrow, 15-centimeter, pieces of metal for its outer shell. The one-door El Duga stoves need supplies of wider, 24-centimeter, pieces. The El Jiko favors circular, or "doughnut," pieces of metal, as from barrels, because its templates are curved.

One purpose of metal analysis before starting production is to find the cheapest metal for the cheapest stove possible. In general, when materials are available, the El Jiko is the least expensive, followed by the open-draft El Duga, the one-door El Duga, and the four-door El Duga. But often, materials may not be available for the cheaper models, or the producers and the consumers may not like it as much as a more expensive model.

To keep the price of the stove down, producers should use scrap because it is less expensive. A GTRI consultant found that, on average, thin scrap costs LS .00048 per square centimeter and thicker scrap costs LS .00097. New medium-gauge metal is more expensive at LS .000167. These figures come from surveying scrap yards and souks that sell metal. SREP/RERI also found that workshops generally do not use thinner sheets, sometimes called "waraga," because they are rare. And when in supply, they cost more. This is unfortunate because workshops using sheet metal would be forced to make the entire stove from the more expensive medium-gauge metal. It is possible for a large stove manufacturer (factory) to order sheets directly from abroad, but such an enterprise would require more capital than most entrepreneurs are willing to invest.

In cities, producers may find scrap metal at factories, barrel and tin-can depots, and at automobile junkyards. But most often they find fairly clean scrap from local workshops that make doors, gates and window grills.

In towns, producers also go to door workshops in their area or neighboring ones. Or they might have access to soap or farm chemical barrels. In the Gazera village of Abu Galfa, for example, villagers go to nearby Rufaa workshops to get their scrap. Occasionally, they also buy a lorry-full of scrap from Omdurman. In Shendi and its local villages, producers can sometimes obtain barrels from the local soap factory.

Organizations that support stove makers should encourage them to use diverse scrap sources enabling the producers to piece stoves together for a cheaper price. But, this may prove difficult where producers do not have transportation to carry metal long distances.

But, in Khartoum, for example, where stove producers could be helped to overcome transportation problems, they could put the stove together for as cheap as LS 6 or LS 7. This is how they might assemble an open-draft El Duga stove:

Scenario For Cheap El Duga Assembly

Part	(1985 Prices) Metal Used	Location	Cost
Shell, Grate, Fire start	Barrel (86X179cm sheet, & 57diam. top & bot., @ LS 20.00/ 4 stoves)	Bittar Co.	LS 5
Bottom	Big Paint Can Tops (32 cm diam. @ 10 pt.)	Cemetery Rd Khartoum	LS .10
Pot rests	Scrap bar	Kh.Ind. Are	LS .40
Rivets	New rivet nails	Any souk	LS .10
TOTAL:			LS 5.6

(LS 1 = US$ .25)

Producers could assemble the stove more cheaply if they purchased inexpensive metal from factories that sell their scrap by the ton or truckload. If organizations help producers find ways to purchase and store metal, producers could make stoves for as little as LS 3 or 4.

Khartoum Scrap Supply

Because SREP/RERI has worked directly in Khartoum, it has gathered information on the types of scrap available at different locations. This information may be helpful in comparing costs in other cities as well as indicating what kinds of metal can be found. The thinner metals are listed for two reasons: (1) for use in stove bottoms, and (2) for use in stoves that have been crimped. Crimping is basically the corregating of metal to give it more strengnth.

There are several **large factories** that have constant supplies of scrap. Available are different gauges, from very flimsy to thick, in varying sizes of pieces. But this metal is always sold by ton or truckload, not in small amounts to individuals. If individuals want to buy this metal, they must do so through middlemen who buy the scrap and sell it in metal souks and scrap yards near the Omdurman Souk Ashabi and near the scrap yard near El Thowra, Omdurman.

There are approximately four **scrap yards** in greater Khartoum, at least one in each of the three towns (Khartoum, Khartoum North, and Omdurman). Khartoum has one in its southwest corner Omdurman has two, one near its Souk Ashabi and one near El Thowra. Khartoum North has scrap areas north of its Industrial Area.

Throughout the industrial areas of Khartoum and Omdurman, there are **door and gate workshops** that have small supplies of scrap. To a lesser extent, there are workshops in the smaller, local souks in all of Khartoum's three towns.

Some Sudanese make a living collecting and selling **oil and milk tins.** In Khartoum's Souk Assegana and Omdurman's main downtown souk, in particular, there are several shops that sell these tins exclusively. The medium-size milk cans yielding a 22.5-by-49-centimeter sheet cost about 20 piasters. The one-gallon oil cans that give a 53-by-24-centimeter sheet cost about 40 piasters. The five-gallon oil cans that have a 8-by-35-centimeter sheet cost LS 3.50 used and LS 5 new.

Greater Khartoum has several **barrel depots.** Most are concentrated in the southern end of Khartoum and on the road to Jebel Aulia. But these barrels (oil drums) are also sold in the downtown Omdurman souk and to a lesser extent in other areas of Omdurman and Khartoum North.

Sometimes found in these depots are other kinds of scrap metal, in particular, large paint cans and soda barrels. The paint cans have lids that make ideal El Duga and El Jiko bottoms and cost as little as 10 piasters. The entire container costs about LS 5.20, and when flattened makes a 37-by-97-centimeter sheet. The soda barrels are a little thicker and yield 165-by-73-centimeter sheets at LS 16.

Barrel (oil drum) lids and bottoms are also usually for sale. These 57-centimeter-diameter pieces cost between 70 piasters and LS 2 and are ideal for El Jiko production.

In sum, there exist many different sources for, and kinds of, metal. An organization should first investigate the availability of metal before it decides what stove would be most appropriate for an area. And where metalworkers already make improved stoves, an organization should give those producers support in finding new metal sources and cheaper ways of assembling them.

APPENDIX F

Proper Metal for El Duga Parts

With scrap, thinner metal costs less, so each El Duga part should use the thinnest metal possible, yet remain strong enough for its function. For all of the El Duga stoves, the **outer shell** requires a medium-gauge metal (1/16 inch). Producers often get this metal as scrap from the shops that make doors and gates. Some occasionally use sheets from junk cars or lighter-gauge barrels. For the modified open-draft stove, the design was altered slightly to allow the easily available and cheap aluminum to be used for the outer shell. SREP has built this stove but it has not formally tested it for longevity.

The **charcoal grate** and its **two inner rings** need a heavier gauge (1/8 inch), such as metal from old car bodies. This same heavy metal is needed for the **legs** if producers decide to use them.The **grate hooks** can be made from a thin metal (but not aluminum) as long as it is strong enough to support the weight of a filled pot. The **stove handles** need to be stronger so that they may support the weight of the pot and the stove itself. The **stove bottoms,** fortunately, only need a thin metal. Tops or bottoms of the 37-centimeter-high paint cans are the perfect size for this and are usually very cheap -- 10 piasters for a lid. The **three pot rests** on the charcoal grate only require fairly thin (3/16 inch) bar.

The side-support legs of the **open-draft stove** need to be a thick-gauge (1/8 inch) metal for they compose this model's frame. The two lower rings, on the other hand, can be made from a much thinner metal, although aluminum is unsuitable here for it is too thin for the lowest ring, which must hold a strong seam with the stove bottom.

For the **one-door stove,** doors should be formed from a medium-gauge, somewhat pliable metal, and its hinge from either 3/16- or 1/4-inch bar.

The **4-door stove** only needs a thin metal for its outer sliding door. Aluminum may be possble, although SREP/RERI has not yet determined how long such a thin door would endure.

APPENDIX G

Training Workshop Check List

During a stove workshop, the dissemination unit uses a trainer, a manual, tools, metal and other supplies to teach the trainees. Here is a more comprehensive **list of supplies** employed to run and document the workshop:

1. Templates
2. Tools
3. Sheet metal
4. Scrap metal
5. Metal rods
6. Rivets
7. Paint
8. Brushes
9. Model stoves
10. Water cannister
11. Name tags
12. Safety pins (for name tags)
13. Registration forms
14. Manuals
15. Questionnaires
16. Cameras
17. Film
18. Slide projector
19. Slides
20. Extension cords
21. Certificates of achievement
22. Refreshments for concluding ceremony.
23. Banners and string

One set of **tools** is provided for every trainee. Each set contains:

- 1-pound hammer for riveting and forming
- 1/2-pound hammer for detailed forming
- wooden mallet for pounding seams and flattening metal
- cold chisel for cutting rod or heavy metal
- pencil or scriber for tracing
- bolt for riveting
- punch for putting holes in grates
- pliers for repairing seams
- rail piece or anvil for curving metal
- "shinkar" for a scratching seam marks

Previous Page Blank

Shinkar

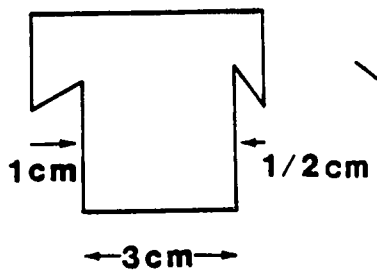

Shinkar

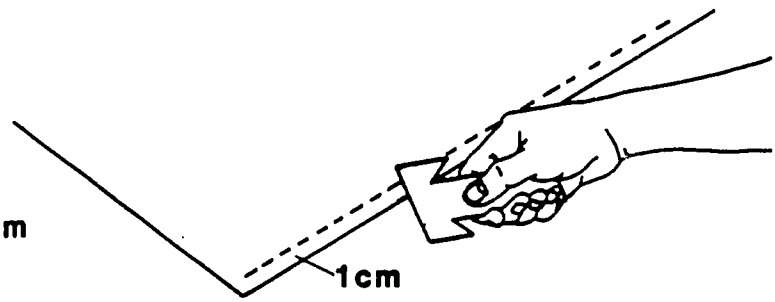

Scratching a line for a seam

APPENDIX H

Questionnaires

Questions for Improved-Stove Producers

1. Which models of stoves do you produce?
2. How did you first learn about these stoves?
3. When did you start producing these stoves?
4. How many stoves do you produce each day?
5. What percentage of your total output is represented by these stoves?
6. Have you ever participated in SREP/RERI marketplace demonstrations? Was it a useful experience?
7. Where do you sell your stoves?
8. How many stoves do you sell each time, and how often?
9. To whom do you sell these stoves?
10. What is the cost for each stove in labor? In materials?
11. What materials (new sheet, scrap) do you use for production?
12. What is your selling price to retailers? To consumers?
13. What problems do you face in producing the stove?

Questionnaire for Workshop Trainee

1. How many years have you been working in metal?
2. Have you used templates before? Will you use them now? Why or why not?
3. Were there tools and methods used in the workshop that were new to you? Which one(s)?
4. Which will you use now, and why?
5. Was the manual helpful? Was it easy to understand and follow?
6. Any suggestions for improvements to the manual?
7. Was the trainer helpful?
8. How could he do a better job?
9. What did you like best about the workshop? What did you like least?
10. If you were teaching stove construction, how would you do it differently?

Questionnaire for Stove Retailers

1. Do you sell an improved stove? Which models?
2. What price do you charge for each model?
3. How many of each model do you sell per week?
4. When did you start selling each model?
5. How many were you selling per week then? How many now?
6. Do you provide brochures with the stoves you sell?
7. Who brings you these stoves?
8. What model of the improved stoves do the producers prefer to make?
9. How many traditional stoves per week do you sell? At what price?
10. Do you know how we can contact the producers of these stoves?
11. What do consumers look for in a stove?
12. Compared to the traditional stove, what comments have you received about charcoal consumption, money savings, durability, ease of use, cooking time? Other comments?
13. What improvements to the new stoves would increase sales?

APPENDIX I

Open-Draft El Duga Stove

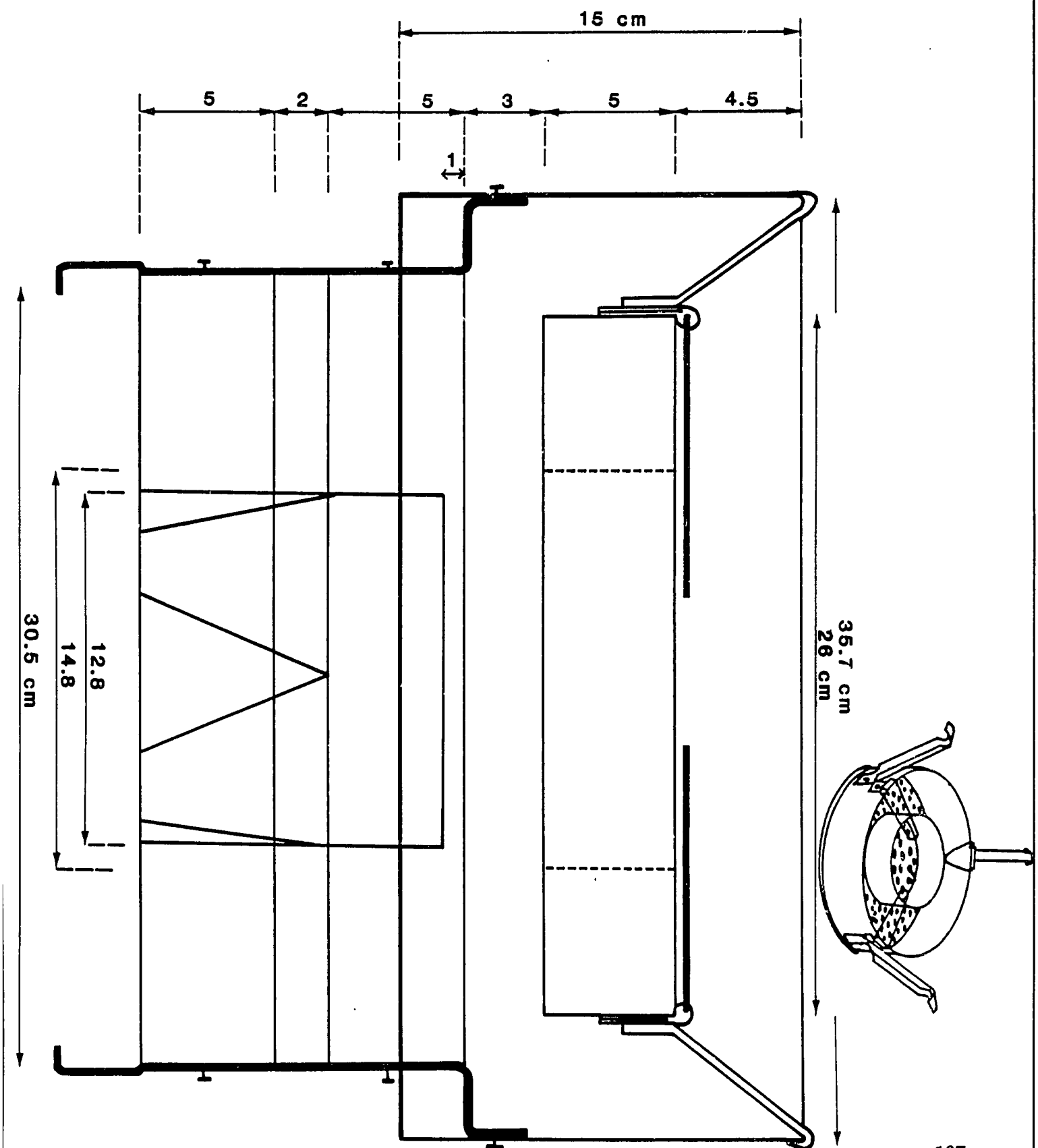

The Charcoal Grate for El Duga Stoves

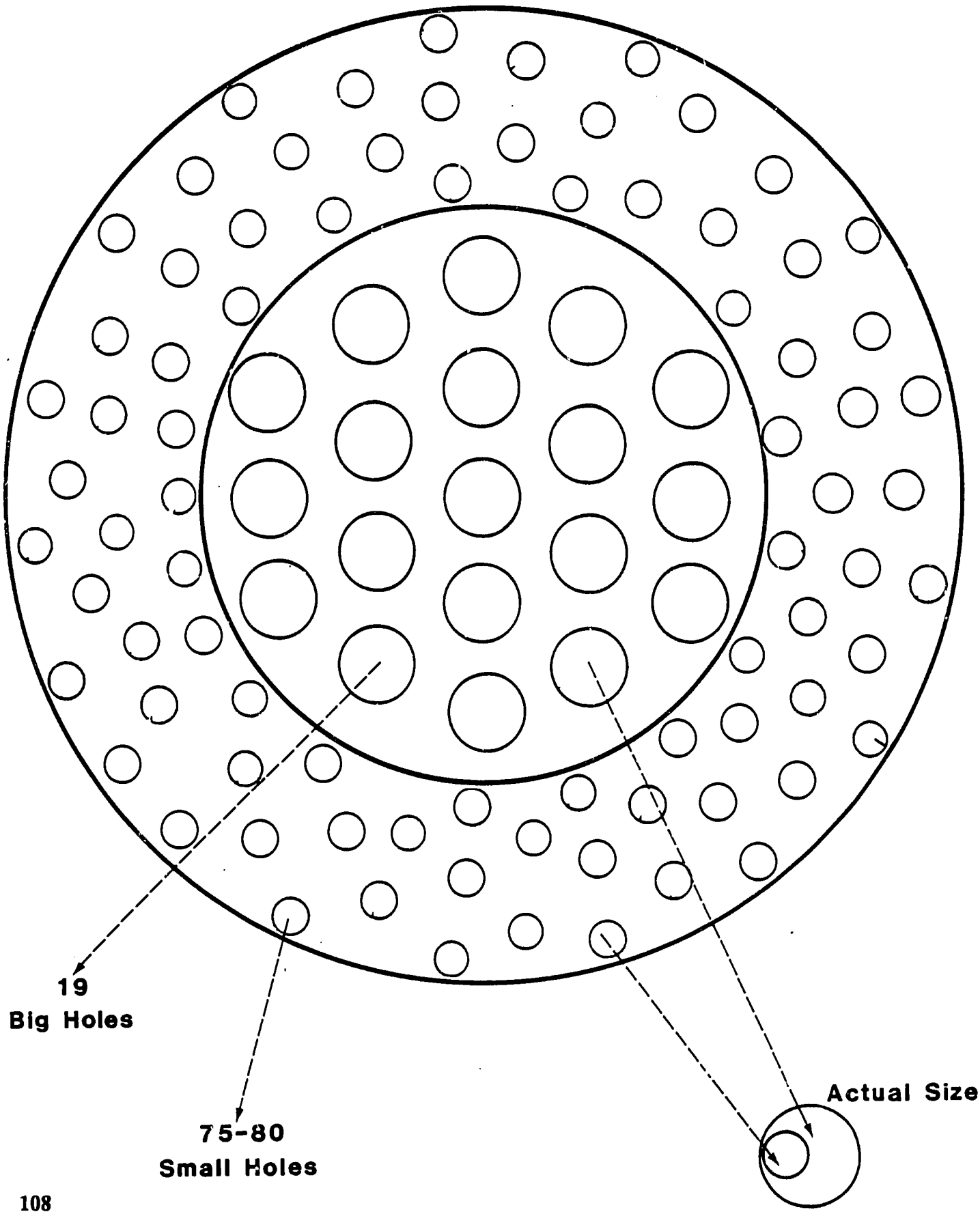

One-Door El Duga

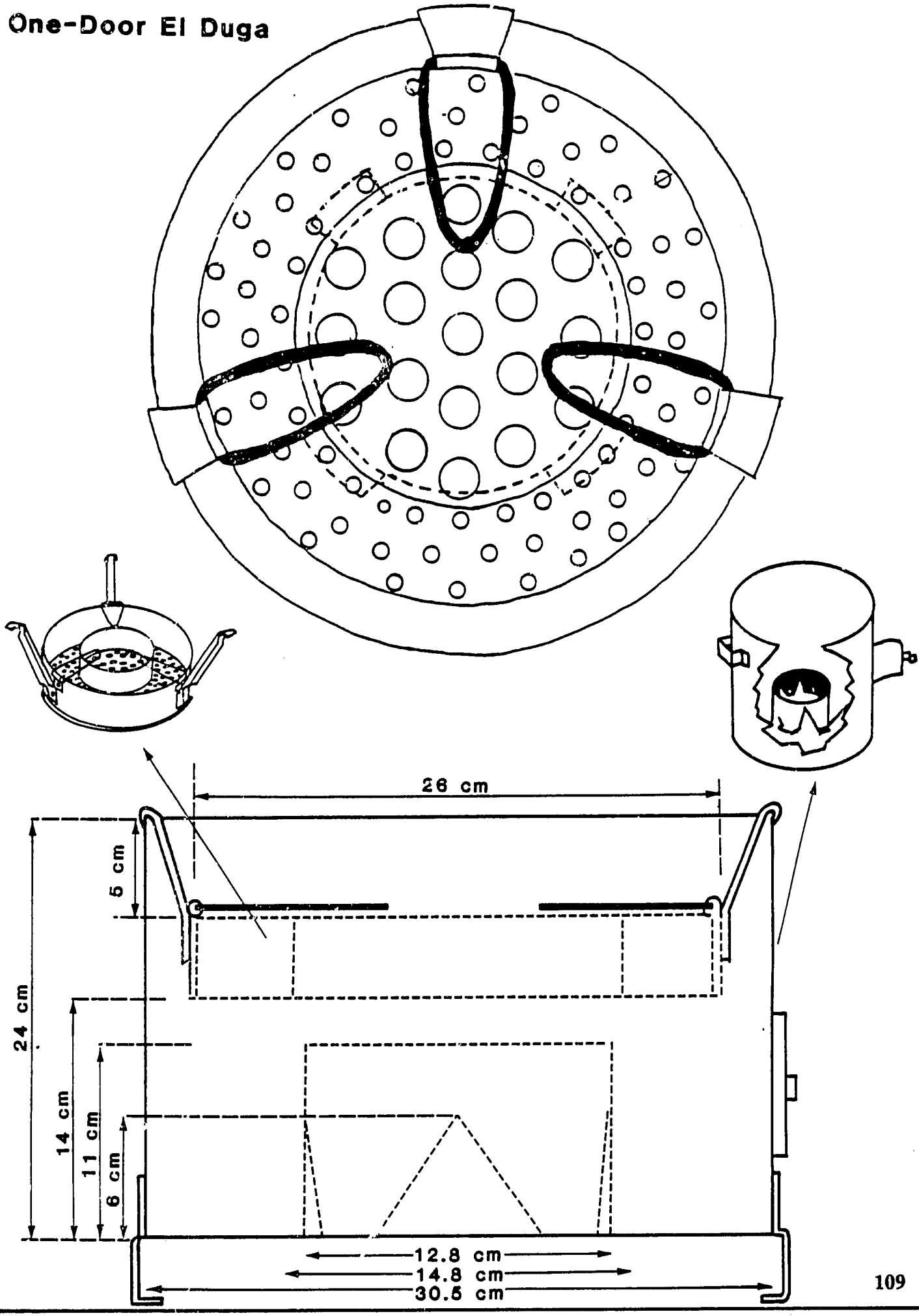

APPENDIX J

One-Door El Duga

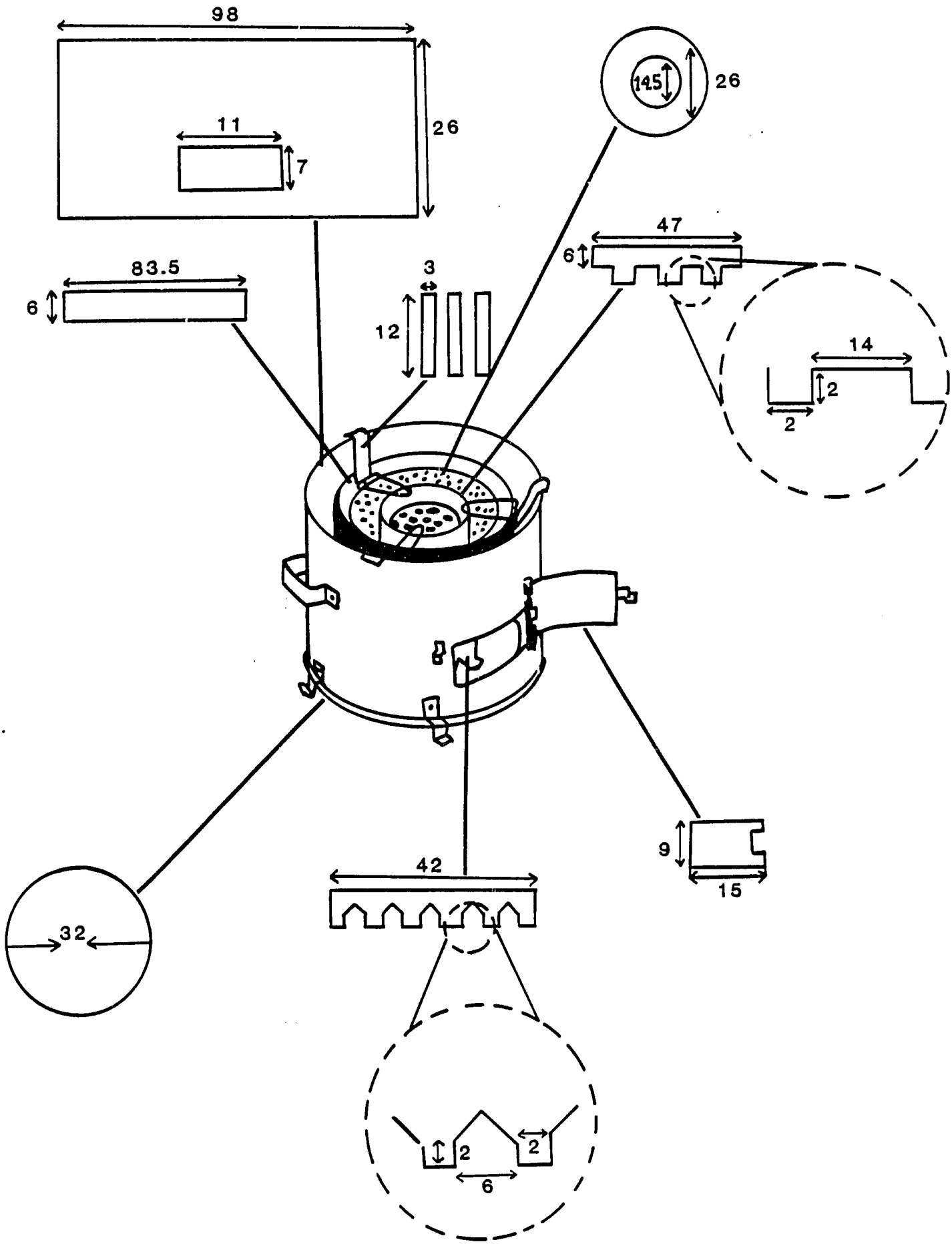

Preceding Page Blank

Open-draft El Duga

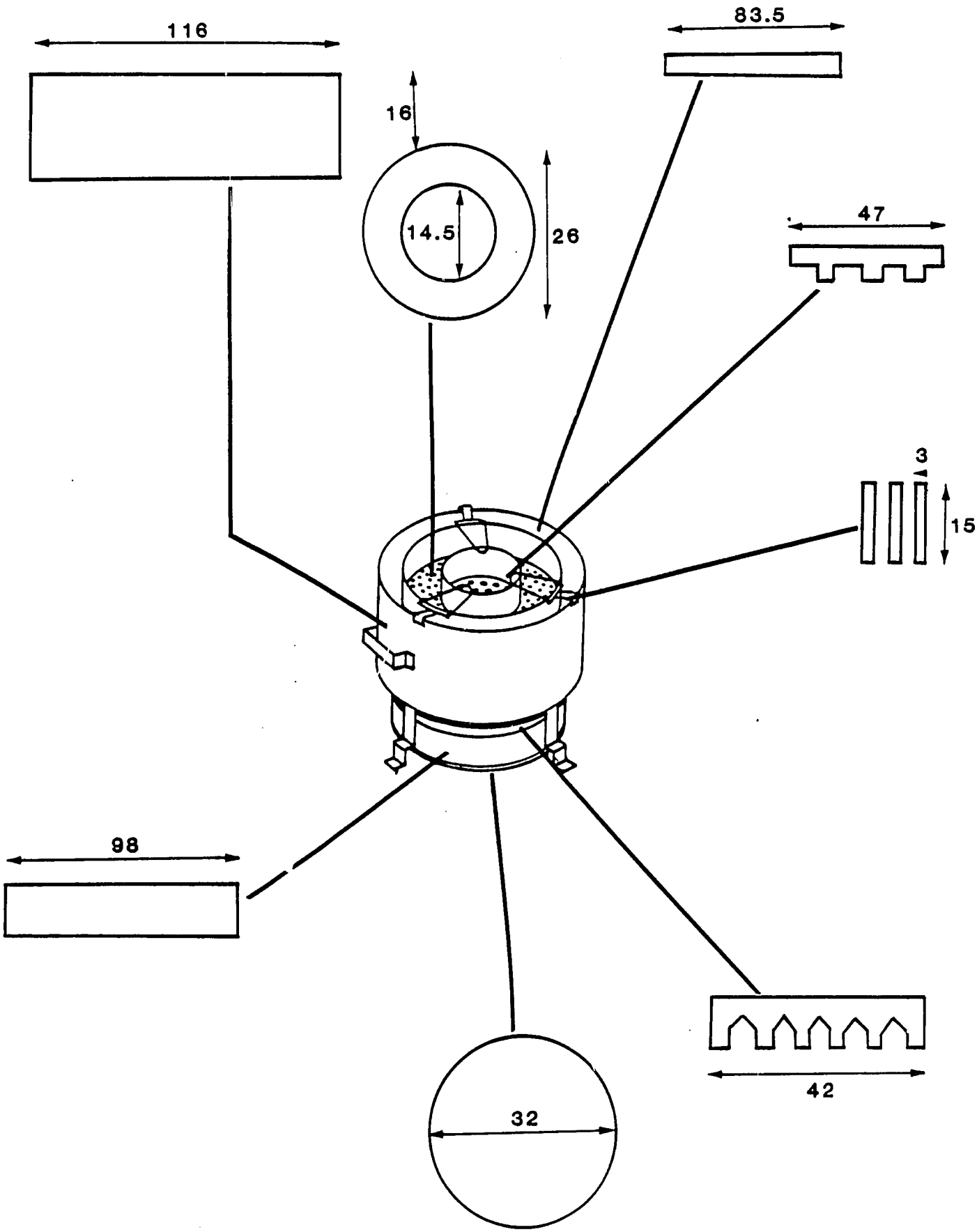

El Jiko Stove

Templates

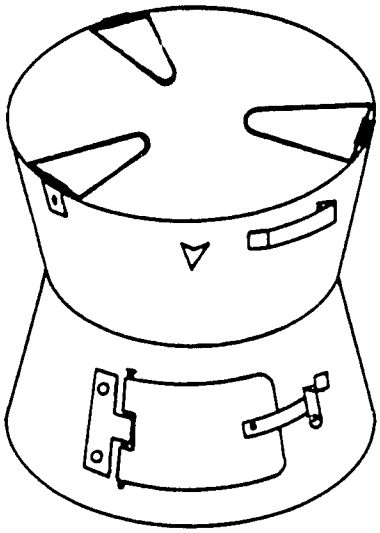

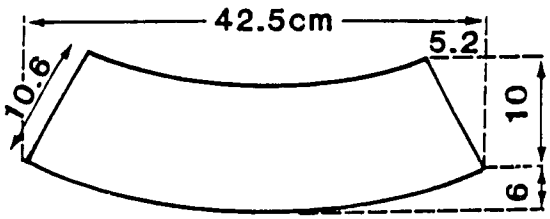

Four pieces of basic template.
One has a hole for the door.

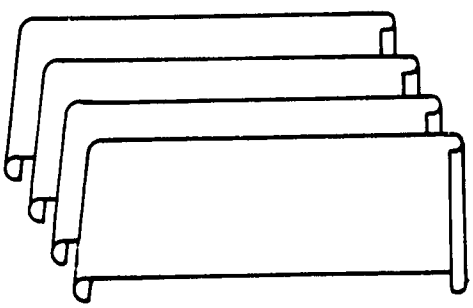

Pieces prepared for
making seams

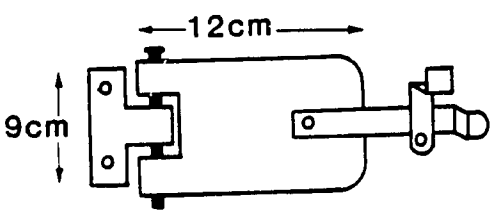

Door

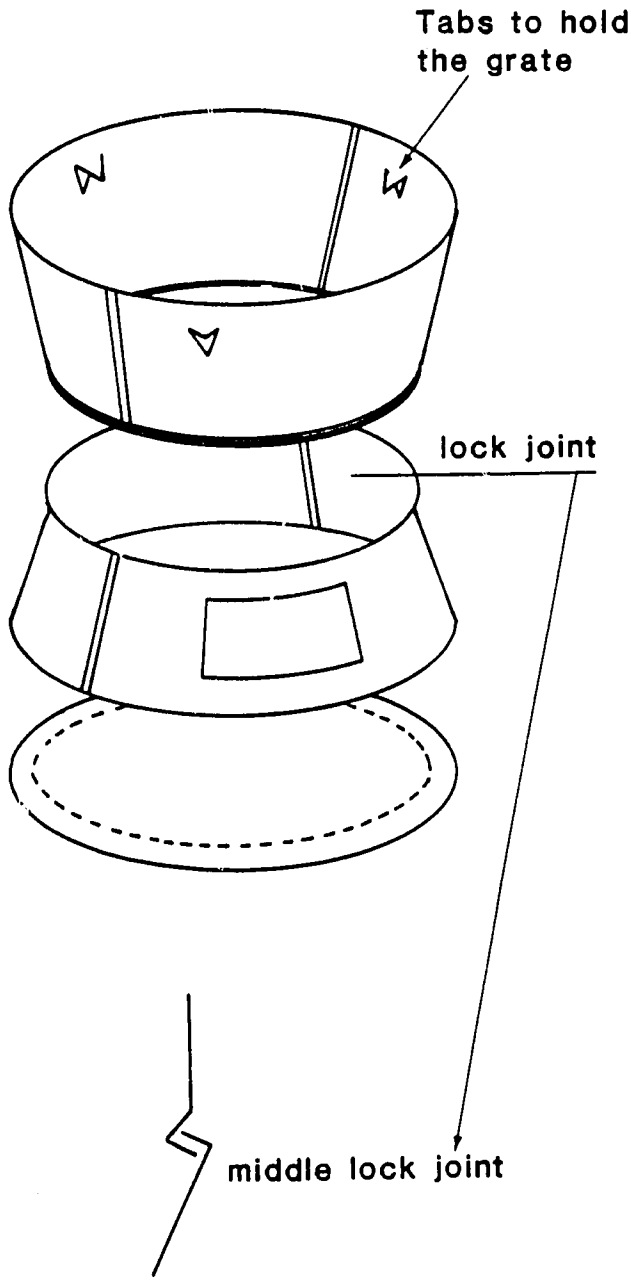

Four-Door El Duga Templates

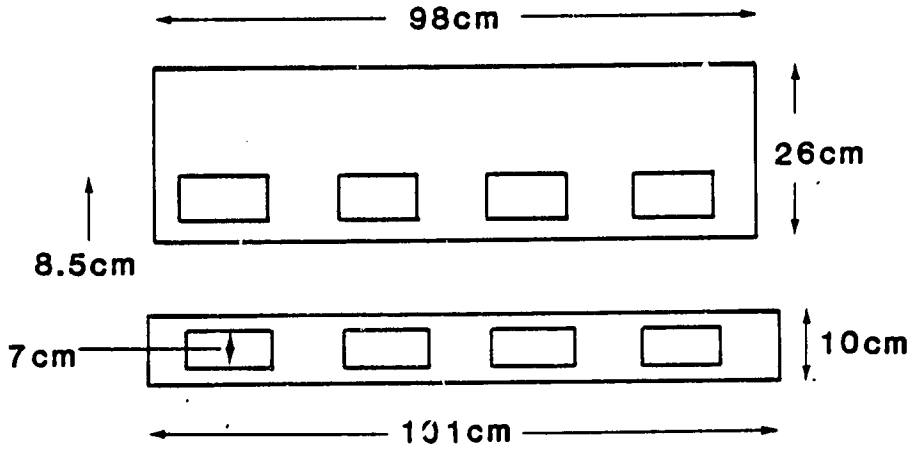

INDEX

Abu Galfa 81,45,78,77,99
Adult Education of Shendi 87,44,45
Adventists Development and
  Relief agency 81
Afrograph 57
Ahfad University College
  for Women 63
Artists 57

Bara 85
Billboards 54
Buses 54

CARE-El Obcid 82,18,29,45,56
CARE-Gedarif 82,18,56
CARE Sudan 11,17,18,44,45
Ceramic grate 17,18,21,28,40
Charcoal 1,2,13,56,59
Consultants 47,48,11,20,26,59,97

Decals 54
Demonstrations 52,32,46,50,55,57,70
Desertification 1
Dilling 85

Ed Duem 81
Efficiency, stove 13,19,9,10,12,15,16,17
El Obeid 82,22
Energy Research Council 7,56,63
En Nahud 85
Er Rahad 85
Euro-Action Accord 84,11,44,45

Forestry Department -
  Khartoum 5,11,18,44,45,79,85,86
Forestry Department -
  Red Sea Province 88,44,45
Forestry Department -
  Wad Medani 88,44,45
Farouk's stove workshop 28

Gamal Sharbaak 84
Gedarif 82
Georgia Tech Research
  Institute 16,20,44,57,91,97
Grants"32,25,26,44

Handouts 50,48,55,57
Hasahesa 78,81

Industrial Area, Khartoum 84,65,68,76,77

Juba 84,11,45

Kadugli 85
Kenya Renewable Energy
  Project 13
Khartoum International
  Fair 55
Khartoum North 85,45
Khartoum Polytechnic
  Institute 57
Kinyanjui,Maxwell 13
Kordofan 85,45
Kosti 85,45,79

Magazines 51,55,57
McNally, Kevin 82
Mohamed Majzoub 18
Monthly stove reports 36,56,76,7

National Energy
  Administration 26,33,71

Pamphlets 48,50,55,57
Peace Corps 47,82
PLAN-Abu Galfa 81,45,56
PLAN Sudan 44,45,78,81
PLAN-Wad Medani 45
Posters 49,51,55,57
Potters 18,29,68,86
Producers,
  List of stove 45

Questionnaires 105,61,31

Rabak 86
Radio 51,49,55
Rahad Agricultural Scheme 86,44,45
Renewable Energy
Information Center 56
Retailers 71,73,107
Rufaa 78,81,97

Scrap metal 97,23,27,28,38,41,43,75,93,95
Seams, metal 6,8,92
Sector, Informal 26,91,6,8,9,21,27,28,29,34,84
Sector, Semiformal/formal 26,92,8,9,27,28,35,91
Sectors of Industry 26,5,46
Sennar 87,45
Shendi 87,45
Sinkat 45
Slides 53,55
Souk Ashabi, Khartoum 84
Souk Ashabi, Omdurman 86,95,99
Souk Assegana 70,97,101
Souk Khartoum North 85
Souk Omdurman 86,99
"Sudanow" 51
Sudan Publicity 57
Surveyors 65,53,62

Television 51,35,49,55,57
Templates 41,32,35,46
Templates, El Duga 41,97
Templates, El Jiko 41,97
Thai bucket stove 17
Traditional-stove
makers 95,7,21,25,26,30,37,38,59

Um Ruwaba 85
UNICEF 88,45
United Nations stove 11
University of
Khartoum 7,13

Workshop, flying 30

Workshop, production 35
Workshop, training 30,31,45,33,103,107

Yahia Hassan Hamid 7