PN-ABG-476
ISN 68948

Report 90-5

A Report of the

Office of Energy
Bureau for Science and Technology
United States Agency for International Development

ANALYSIS OF SWAZILAND SUGAR INDUSTRY COGENERATION POWER OPTIONS

Prepared by

Adolfo Menendez
Wilhelm Leibig
K & M Engineering and Consulting Corporation

Christopher Hurst
RCG/Hagler, Bailly, Inc.

Peter G. Bailey
Agzim, Ltd.

Henry D. Steingass
Katrina M. Rojas
Winrock International

BIOMASS ENERGY SYSTEMS AND TECHNOLOGY PROJECT
DHR-5737-A-00-9058-00
April 1990

TABLE OF CONTENTS

		Page
Map of Swaziland		
1.0	**Executive Summary**	1
2.0	**Objectives and Background**	3
2.1	Study Objectives	3
2.2	Background	3
3.0	**Energy Audits**	7
3.1	Existing Conditions	7
3.2	Objective of Energy Audits	9
3.3	Proposed Changes	9
3.4	Electricity Generation	9
4.0	**SEB Power System**	12
4.1	Overview	12
4.2	Present Facilities--Summary	12
4.3	Future Load Growth and Expansion Plan	12
4.4	Tariff Structure	13
5.0	**Cost Estimates and Financing**	15
5.1	Capital Costs	15
5.2	Operating Costs	15
5.3	Potential Sources of Financing	15
6.0	**Instututional Consideration/Issues**	18
7.0	**Economic and Financial Analysis**	19
7.1	Alternative to Cogeneration	19
7.1.1	Import electricity from South Africa	19
7.1.2	Hydro-electricity	20
7.1.3	Coal-fired electricity	21
7.1.4	Comparison of alternatives to cogeneration	21
7.2	Economic Analysis of Cogeneration	23
7.2.1	Assumptions	23
7.2.2	Results	24
7.3	Financial Analysis of Cogeneration	25
7.3.1	Assumptions	25
7.3.2	Results	26
7.3.3	Conclusions	27
8.0	**Conclusions**	36

TABLE OF CONTENTS (CONTINUED)

	Page
APPENDIX: ENERGY AUDITS	37
1.0 **SUMMARY**	39
2.0 **UBOMBO RANCHES, LTD.**	40
3.0 **SIMUNYE SUGAR ESTATE**	57
4.0 **MHLUME SUGAR CO.**	72

LIST OF FIGURES AND TABLES

Figure 2-1	SEB Electricity Supply	6
Figure 2-2	SEB Final Electricity Cost	6
Figure 7-1	Comparison of New Electricity Supply Options	22
Table A	Summary of Additional Generation...	2
Table B	Approximate Electricity Cost...	2
Table 3-1	Proposed Changes By Site	10
Table 3-2	Summary of Additional Generation...	11
Table 3-3	Coal Required to Reach	11
Table 5-1	Summary of Capital Costs	16
Table 5-2	Assumed Financial Plan	17
Table 7-1	Economics of Cogeneration at Ubombo...	29
Table 7-2	Economics of Cogeneration at Simunye...	30
Table 7-3	Economics of Cogeneration at Mhlume....	31
Table 7-4	Approximate electricity price at..	32
Table 7-5	Financial Analysis at Ubombo...	33
Table 7-6	Financial Analysis at Ubombo...	33
Table 7-7	Financial Analysis at Simunye...	34
Table 7-8	Financial Analysis at Simunye...	34
Table 7-9	Financial Analysis at Mhlume....	35
Table 7-10	Financial Analysis at Mulume...	35

ACKNOWLEDGEMENTS

The team would like to express its gratitude to all those who provided information and their time in the process of conducting this study. In particular, the team wishes to acknowledge the contributions made by the Swaziland Government, especially the Ministry of Natural Resources and Energy, and officials of the Ubombo, Simunye, and Mhlume Sugar companies, without those assistance the study would not have been possible. Lastly, the team wishes to thank the USAID Mission in Mbabane, who provided crucial guidance and logistical support in the conduct of the team's work.

GLOSSARY OF ACRONYMS

A.I.D.	U.S. Agency for International Development
CIF	Customs Insurance and Freight
E	Emalangenis, Swaziland curency, at parity with South Africa Rand
ESCOM	Electricity Supply Commission (South Africa)
GWL	Gigawatt hours or kWh x 10^6
KVA	Kilovolt - Ampreres, a measure of electricity demand, used for demand charts
kWl	Kilowatt hours
mWh	megowatt hour
RSA	Republic of South Africa
SEB	Swaziland Electricity Board
t	tonnes
tcd	tonnes of cane per day

SWAZILAND

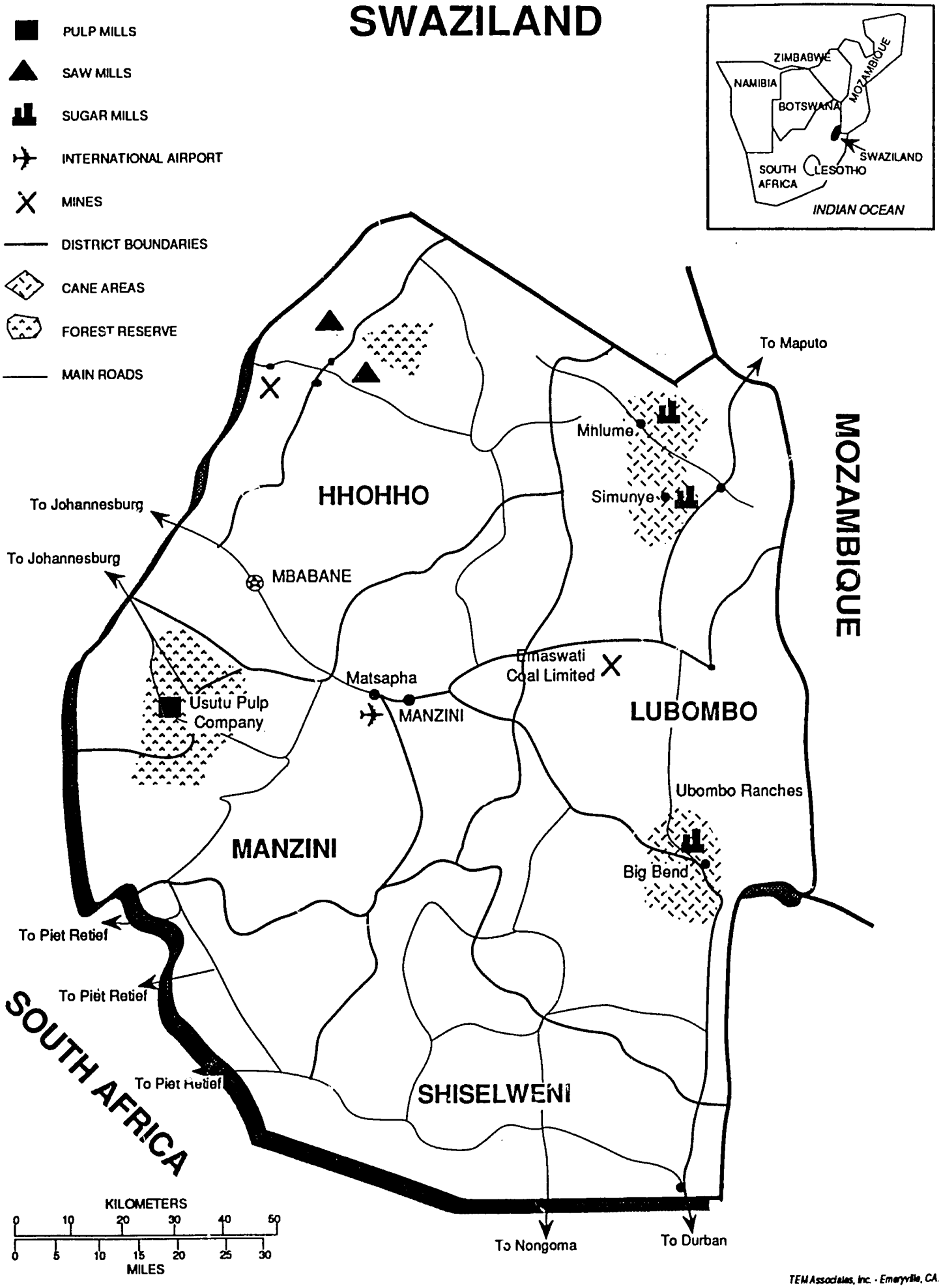

TEM Associates, Inc. · Emeryville, CA.

1.0 EXECUTIVE SUMMARY

This report presents the results of a study conducted by a team of specialists on the sugar industry in Swaziland. The team's objective was to identify changes that would increase the factories' energy efficiency and electricity generation, and to evaluate the economic and financial benefits from these changes.

Swaziland depends upon imports to meet 40% of its total final energy requirements, including 55% of its electricity needs, all of which is purchased from the Electricity Supply Commission of South Africa (ESCOM). While the price for electricity purchased from ESCOM is significantly lower than for the electricity produced in the country by the state power utility, the Swaziland Electricity Board (SEB), political and economic uncertainties of this dependence, as well as the sharp electricity price escalation of recent years, may make indigenous power development both a higher Swazi development priority and economically justifiable. However, it is also clear from the study's review that the SEB may be near the limit of its financial capacity for new investment.

The sugar industry is made up of three estates and factories, each producing approximately 140,000 to 160,000 tonnes of sugar per annum; the three companies are Mhlume Sugar Company, Simunye Sugar Estate, and Ubombo Ranches. The changes identified at each location consist primarily of equipment modernization which will enhance energy efficiency and take advantage of the additional available energy to generate electricity. The ultimate goal of the increased generation potential is to eliminate, or reduce, the sugar factories' purchases of electricity from the SEB to meet their internal process and irrigation power needs; these are substantial power needs, amounting to one-quarter of the present national total.

The study proposes reforms in the factories' operating philosophies which could increase energy efficiency and generation potential. For each factory, the team recommends a reduction in the present imbibition rates for sucrose extraction. Other changes recommended include a reduction in the steam supplied to the evaporator systems, and replacing existing power generation equipment (boilers, turbo-generators) with more efficient equipment. In the study, two alternative scenarios, comprising equipment modifications and reduced imbibition rates, were analyzed for each of the three sites.

By implementing the team's recommendations, one of the factories, Ubombo Ranches, could achieve total electricity self-sufficiency--including its irrigation power needs--and be able to export power through the use of bagasse fuel only. The other two factories, Simunye and Mhlume, would require the burning of supplemental fuels, such as coal, in order to achieve electricity self-sufficiency. This is shown in Table A.

The team evaluated the economic and financial benefits of their recommendations for the nation as a whole and for each of the three enterprises. This required an assessment of both the overall economic returns for the country and the financial rates of return to the individual factories under a range of electricity price

Table A: Summary of Additional Generation Using Bagasse Only [from Table 3-2]

Location	Current Deficit (MWh)	Additional Generation (MWh) Alternative 1	Alternative 2
Ubombo	38,909	43,834	63,441
Simunye	40,757	17,318	20,909
Mhlume	43,402	24,638	32,990

scenarios. Cogeneration by the sugar industry is compared to the principal power alternatives, namely coal-fired electricity, hydro-electricity, and import from ESCOM using currently available information about these options in Swaziland. The results indicate that the proposed modifications are both economically and financially attractive at Ubombo. At Simunye, the changes are financially attractive at current electricity prices, but are marginally beneficial in economic terms. They will, however, become economically feasible in the near future if the recent trend in rising electricity prices continues. At Mhlume, the proposed changes do not appear economically or financially feasible under current electricity prices and are unlikely to be considered in the near future. The economic results are summarized in Table B below.

Table B: Approximate electricity price at which cogeneration projects give at least a 10% return (economic) on capital [from Tables 7-1 to 7-4]

Mill	Alternative	Price increase above current level (%)	Estimated IRRI (%)
Ubombo	1	0	14
Ubombo	2	0	21
Simunye	1	40	11
Simunye	2	30	10.5
Mhlume	1	more than 100	10
Mhlume	2	80	10

2.0 OBJECTIVES AND BACKGROUND

2.1 Study Objectives

The primary objective of this study is to identify and evaluate improvements in the Swazi sugar industry that could increase its energy efficiency and electricity generation potential. The study evaluates the proposed changes from two perspectives:

- From the point of view of the individual companies. In this context, the principal objective is to assess the financial and economic benefits resulting from the factories' capital investments in cogeneration.

- From the point of view of the Government of Swaziland. The main concern is to identify the cost of the electricity that could be generated by the sugar industry, compare it against the electricity costs from alternative sources available to the government, and assess the economic benefits for the nation as a whole.

In addition, the study identifies key issues which could influence the development of additional generation capacity in the Swazi sugar industry. These issues include:

- the government's bagasse pricing policy;
- the SEB's problems in financing a third link with the Electricity Supply Commission (ESCOM);
- the rising cost of ESCOM electricity; and
- the government's desire to achieve greater energy self-sufficiency and reduce its dependence on the Republic of South Africa.

It is hoped that this evaluation and comparison of economic and financial costs, as well as the identification of key policy concerns, will provide the government of Swaziland with sufficient data and understanding to begin to formulate its policy on alternative energy options in the power sector and sugar industry.

2.2 Background

The Kingdom of Swaziland lies in southeastern Africa, bordered by the Republic of South Africa (RSA) and Mozambique. The country has an area of 17,364 square kilometers and an estimated population of 800,000 in 1988.

For its size, Swaziland has a considerable sugar production industry. The industry is made up of three sugar estates, each producing approximately 140,000 to 160,000 tonnes of sugar per annum.[1] All three estates are located in the thinly

[1] In this report, tonnes (t) refers to metric tons.

populated Lowveldt region. This region, with an average altitude of 200 meters, includes about 37% of the country's land area. Swaziland's marginal coal deposits are also located in the Lowveldt. The region receives little rainfall and, as a result, all three estates require substantial irrigation. Together, the three sugar companies employ over 10,000 people.

Information on the crushing capacities and ownership of each of the three companies is presented below.

Factory Name	Capacity (tCD)*	Ownership Split	
Ubombo Ranches, Ltd.	7,200	Private	60%
		GOS	40%
Simunye Sugar Estate	6,500	Parastatal	34.4%
		GOS	32.5%
		Private	23.1%
		Govt of Nigeria	10%
Mhlume Sugar Company	7,200	GOS	50%
		Private	50%

*tCD= tonnes of cane per day

All three factories emphasize a very high efficiency in sucrose extraction and processing. However, they also purchase a substantial amount of electricity from the government-owned electricity company (SEB). The factories use the electricity purchases primarily to meet their relatively large irrigation pumping demand.

Swaziland depends upon imports to meet 40% of its total final energy requirements, including 55% of its electricity needs. The imported electricity is purchased from the Electricity Supply Commission of South Africa (ESCOM) (see Figure 2-1). The price for electricity purchased from ESCOM is significantly lower than for the electricity produced in the country. Therefore, from a purely economic point of view, it is unjustified to increase electricity generation from indigenous resources.

In view of the region's political and economic uncertainties, however, reducing dependence on purchases from ESCOM may become a higher Swazi development priority. Furthermore, the price of ESCOM's electricity has escalated sharply in recent years. The SEB's final electricity cost has reflected ESCOM's rising prices (see Figure 2-2). If this trend continues, economic justification for electrical generation with indigenous resources may soon be possible. For the three sugar estates, the rising prices of electricity provide a compelling incentive to investigate

FIGURE 2-1

SEB Electricity Supply

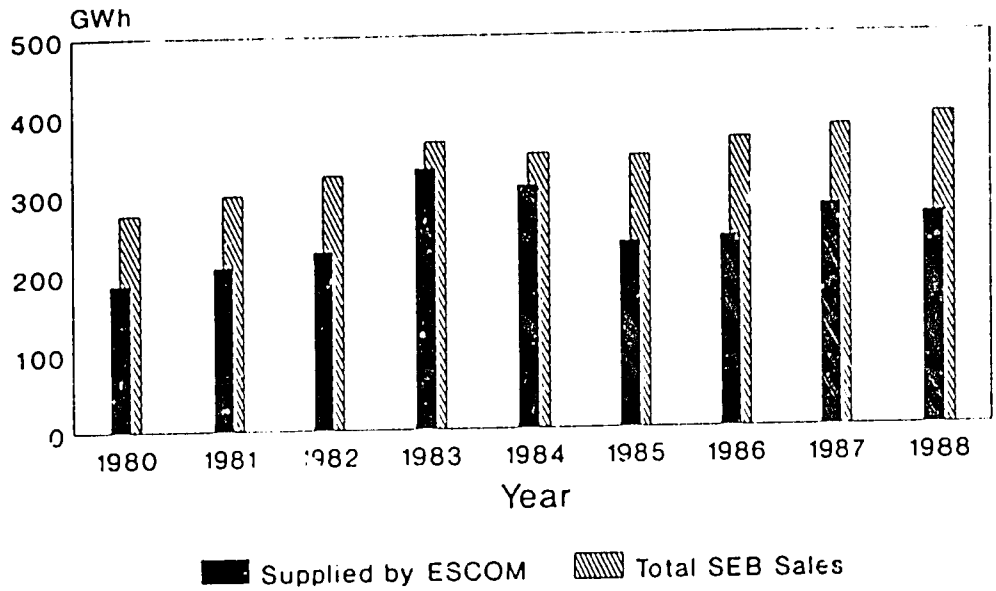

FIGURE 2-2

SEB Final Electricity Cost

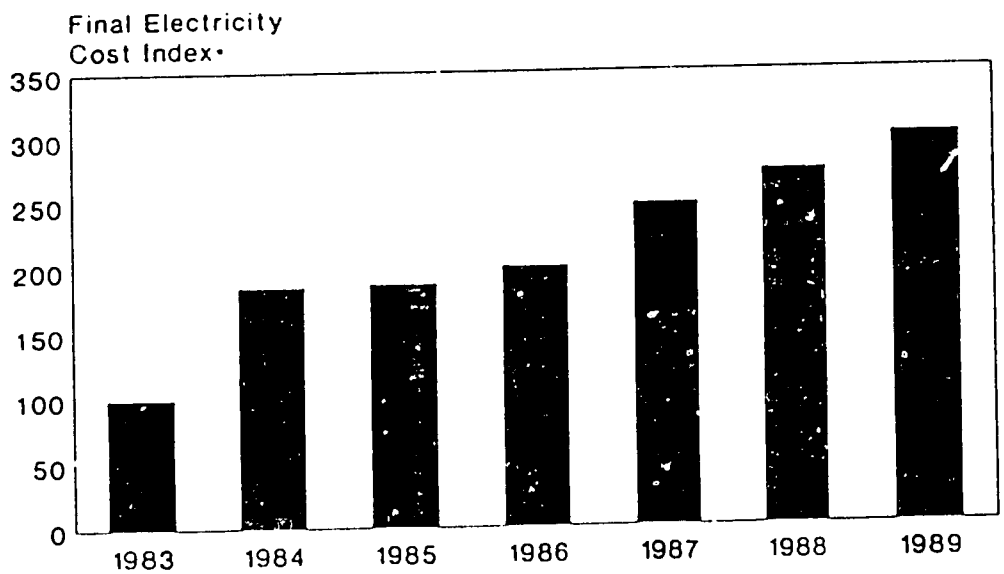

*Note: Final electricity cost comprised of capacity charge plus kWh energy charge combined into an index (see section 9.1)

alternative means of increasing their own production of electricity, thus eliminating or reducing the amount of electricity they must purchase from the SEB.

In 1986, a World Bank and UNDP mission conducted an evaluation of the energy sector in Swaziland.[2] The mission identified electricity generation from bagasse as a worthwhile alternative for further study and consideration. In particular, the World Bank recommended studies at each of the mills to determine production bottlenecks, cogeneration potential, and the specific investments required to achieve electricity self-sufficiency primarily through the use of indigenous fuels.

In early 1988, a team sponsored jointly by the U.S. Trade and Development Program (TDP) and the U.S. Agency for International Development (AID) visited Swaziland. As a result of that visit, the team recommended a follow-up study on increasing electric generation in the sugar industry and the prospects for private power sales to the SEB. They envisioned a study would include individual energy audits as well as the necessary factory upgrades.

A team of three specialists visited Swaziland in October, 1988, to conduct the study recommended by the joint TDP/AID mission. The results of that effort are presented in this report.

[2] UNDP/World Bank, "Swaziland: Issues and Options in the Energy Sector," Energy Sector Assessment Program, February, 1987, Washington, D.C.

3.0 ENERGY AUDITS

3.1 Existing Conditions

Sugar is produced in three factories in Swaziland. The Ubombo and Mhlume mills began to operate in 1960 and the Simunye factory started milling in 1980/81. In the latter mill, no major capacity changes have taken place. However, both the Ubombo and Mhlume mills have made substantial investments over the years to increase crushing capacity and production rates and improve overall performance. They have installed state-of-the-art diffusion sucrose extraction systems ("diffusers") and are operating them in parallel with the original mill trains.

All three plants produce excellent results due to a combination of strong, efficient, management and the use of reliable and well-maintained equipment. The overall time efficiency (fully operating time vs. available time) is between 88 and 90 percent and the average sucrose recovery is in the 90 to 91 percent range.[3]

High sucrose extraction in mill trains and diffusers is achieved with uncommonly high imbibition rates running 300 to 400 percent on fiber.[4]

The evaporation stations are operating in the conventional quadruple or quintuple effect schemes. Sugar boiling is done exclusively with first vapor. Juice heaters and the diffusers are provided with exhaust steam that meets the required pressure and temperature levels. With the exception of the Ubombo factory, approximately 25 percent of the sugar production is refined using the carbonation process. Three strikes are almost always boiled; in local terms, they are referred to as the "A," "B," and "C" strikes. Footings for the "C" sugars are boiled from syrup, seeded with powdered sugar, and cut as required. The "C" sugars, in turn, are used as the footing for the "A" and "B" strikes and "B" magmas as footing for boiling the "A" strikes.

Batch type centrifugals are used to produce the "A" sugars. The "B" and "C" low grade masses are handled nearly exclusively with continuous machines.

Bagasse is the main source of primary energy in all the sugar factories, but the quantities available fluctuate considerably. A rather significant change in the fiber content of the sugar cane takes place during the crushing season. In May, at the

---

[3] The three Swazi sugar factories are world leaders in efficiency of sucrose extraction and processing.

[4] The average imbibition rate in most sugar industries is approximately 200 percent on fiber. This means that water equal to twice, or in the Swazi case three to four times, the weight of fiber in cane is added to the cane to aid the sucrose extraction process.

beginning of the season, fiber content is at 12 to 13 percent. By December it is in the 16 to 17 percent range. This phenomenon causes a major fuel shortage during the first half of the season which is aggravated by the poor thermal efficiency of the plants in general. As a result, coal must be used to augment bagasse supplies and most boiler equipment is capable of operation on both coal and bagasse.

During the latter part of the crushing season, there is a large build-up of surplus bagasse which is stored primarily in the open. Some bagasse, however, is stored in covered buildings which are equipped with an efficient automatic backfeeding system to the boiler units. This facilitates the use of bagasse for cogeneration by generally avoiding material degradation and spontaneous combustion problems.

Although the consumption of heat for the sugar process itself is approximately the same in all three factories, the performance of the thermal power plants and associated cogeneration systems varies widely. In this area, each of the three mills could make considerable improvements in order to achieve self-sufficiency and make more efficient use of cane bagasse for the production of power in a cogeneration and/or autonomous generation mode.

The live steam requirement in the factories was found to be in the range of 50 to 60 percent on cane.[5] Such high requirements are basically the result of the extremely high imbibition rates used in all operations (between 300 and 400 percent on fiber). Any reduction in these rates would result in considerable savings of process steam. Reduced steam requirements, coupled with more efficient boilers, turbo-generators and prime movers, would allow sugar factories to increase power production greatly. Such equipment is not present in the plants surveyed during the mission

Substantial improvements in energy efficiency could be achieved with the following changes:

o the lowering of imbibition water rates being used for sucrose extraction.

o a reduction in the steam demands to the evaporator systems.

o replacing existing power generation equipment (boilers, turbo-generators) with more efficient equipment.

Lastly, it should be noted that all three sugar companies operate large-scale estate irrigation systems which have power demands ranging from several megawatts to

[5] 50-60% on cane weight, considerably higher than average (30-40%).

12 megawatts, depending on the season and moisture conditions. Most of this power demand is met by purchases of electricity from the SEB, and is a major economic target of opportunity with cogeneration.

3.2 Objective of Energy Audits

The detailed results of the energy audits conducted at the three sites are discussed in Appendix A of this report. The objective of these audits was twofold:

- To identify those changes in the existing equipment and/or operating philosophy which could be reasonably implemented in order to increase each mill's energy efficiency.

- To identify additional generation equipment that would be required to take advantage of the increase in available energy for the production of electricity.

3.3 Proposed Changes

The three factories were visited by a team of specialists during October and November 1988. At each site, the team identified a number of changes that would meet the audit objectives. These modifications include equipment changes and reductions in the imbibition rates used at each location. Because the proposed alteration of imbibition rates represents a major shift in the factories' operating philosophies, its effect on increasing energy efficiency will be evaluated separately in the economic and financial analyses. Reducing imbibition rates slightly reduces sugar yield per tonne of cane processed; thus losses in sugar revenues must be compared with decreased operating costs.

Table 3-1 summarizes the proposed changes at each of the sites. Specific details for the proposed changes are discussed in Appendix A to this report.

3.4 Electricity Generation

The team calculated the additional electricity that would be generated after implementation of the proposed changes at each of the sites. Table 3-2 presents their results (assuming that bagasse is used as the only source of fuel). As shown in the table, self sufficiency is feasible only at the Ubombo site. In fact, at Ubombo, surplus power--for sale to the SEB grid--can actually be produced under both alternatives (i.e., equipment changes alone or combined with a reduction in imbibition rates).

Simunye and Mhlume, on the other hand, can achieve self- sufficiency only by burning supplemental fuels. Since coal is readily available at relatively low prices,

it was assumed coal would be used for generation of the additional electricity required to reach self-sufficiency. Both of these two factories already use coal to generate process steam and electricity for their sugar production and irrigation needs. Table 3-3 summarizes coal requirements for self-sufficiency at Simunye and Mhlume.

TABLE 3-1

PROPOSED CHANGES BY SITE

Location	Alternative 1	Alternative 2
Ubombo	Addition of a new 8MW passout/condensing turbo-generator	Same as Alternative 1
	Addition of falling film evaporators	Reduction in imbibition rate to 300 percent on fiber
Simunye	Addition of a new 135 t/h steam boiler	Same as Alternative 1
		Reduction in imbibition rate to 300 percent on fiber
Mhlume	Addition of a new 100 t/h steam boiler	Same as Alternative I
	Addition of a 5.3 MW topping turbine	Reduction in imbibition rate to 300 percent on fiber
	Addition of a 6.0 MW passout/condensing turbo-generator	

TABLE 3-2

SUMMARY OF ADDITIONAL GENERATION
UTILIZING BAGASSE ONLY

Location	Current Deficit (MWh)	Additional Generation (MWh) Alternative 1	Alternative 2
UBOMBO	38,909	43,834	63,441
SIMUNYE	40,757	17,318	20,909
MHLUME	43,402	24,638	32,990

TABLE 3-3

COAL REQUIRED TO REACH SELF-SUFFICIENCY*

Location	Required Coal (t/annum) Alternative 1	Alternative 2
SIMUNYE	13,519	11,601
MHLUME	18,536	10,285

*Coal calculations based on approximate heat value of coal of 10,000 Btu/lb and approximated heat rates of 12,800 Btu/kWh at Simunye and 21,500 Btu/kWh at Mhlume.

4.0 SEB POWER SYSTEM

4.1 Overview

The Swaziland Electricity Board (SEB) is a government-owned entity which was established by the 1963 Electricity Act. The SEB is the only body authorized to generate, transmit, and distribute electricity under Swazi law. The law, however, also gives SEB the authority to grant licenses to other entities to generate electricity for their own use. SEB may also license the sale of electricity to end users, provided that the corresponding tariffs are equivalent to SEB charges.

The provisions of the 1963 Act allow SEB to set its own tariffs. SEB is managed by a board of directors appointed by the Minister of Natural Resources, Land Utilization, and Energy (NRLUE). The board consists of a Chairman and three to five additional members.

4.2 Present Facilities--Summary

SEB's current supply capacity is approximately 110 megawatts consisting of 40.5 megawatts of hydropower (9 units), 9.5 megawatts of diesel (3 units), and 60 megawatts supplied by the transmission link with ESCOM. Half of the hydro capacity is over 20 years old and is reported to be in need of extensive rehabilitation.

The SEB transmission and distribution network is comprised of approximately 87 kilometers of 132 kV lines, 825 kilometers of 66 kV lines, and 1,645 kilometers of 11 kV lines.

4.3 Future Load Growth and Expansion Plan

SEB's current peak load is approximately 85 megawatts and total annual generation figures are approximately 382 gigawatt-hours. This represents a rough capacity factor of approximately 55 percent for the system as a whole. However, it has been the practice of the SEB to maximize generation from its hydro facilities to the extent possible, increasing these capacity factors and decreasing capacity factors from other facilities.

During the team's visit, solacer demand growth rates were forecast at 3 percent for 1989 and 4 percent per annum for subsequent years. These projected growth rates are only slightly lower than the predictions made by the World Bank energy assessment mission in 1986. Demand growth is somewhat more difficult to predict given that it is highly dependent on the installation of a chrome smelter in 1995 which could add approximately 52 megawatts to overall demand. Without the smelter, load growth was estimated by the World Bank to be approximately 4.6 percent to 4.8 percent per year after 1989.

Since the construction of the smelter remains uncertain, SEB is considering several options or combinations of options to meet its future system growth needs:

- o A third transmission line link with ESCOM which will satisfy an additional peak demand of 30 to 60 megawatts.
- o A new coal-fired power station of at least 30 megawatts (with a maximum capacity of 90 megawatts).
- o A new hydro station at Komati with a capacity of 10 megawatts.

At the time of the visit (October 1988), the SEB was not seriously considering the potential use of additional capacity and generation from the three sugar mills. However, the directors indicated their willingness to consider those alternatives if the Swazi government took steps to encourage production based on indigenous fuel resources, as opposed to electricity purchases from South Africa's ESCOM.

4.4 Tariff Structure

SEB currently purchases over 55 percent of its electricity from ESCOM. This electricity is purchased at the bulk supply rates available to ESCOM's largest customers. ESCOM's rates have been low by international standards, reflecting the large economies of scale inherent to the ESCOM system and the low cost of fuels in the Republic of South Africa. In recent years, ESCOM's charges have risen in response to its large investment program. As a result, the SEB has steadily increased its own tariffs to reflect the higher cost of electricity from ESCOM. High domestic inflation and heavy financing obligations associated with the Luphohlo Ezulwini Hydropower Project, commissioned in 1985, continue to add upward pressure on the domestic rates for electricity.

The tariff charged by SEB to large commercial and industrial users is made up of two components:

- o A demand charge measured in kilovolt-Amperes (KVA)
- o An energy charge measured in kilowatt-hours (kWh)

In 1988, the values for the SEB charges were:

Demand = 16.63 E/KVA (US$ 6.79/KVA)
Energy = 6.13 C/kWh (US$ 0.025/kWh)

Where E: Emalangeni (E 2.45 = US $ 1.00)
C: Swazi cents (100 C:1 E)

In the future, ESCOM's charges are expected to increase at the RSA inflation rate, which is likely to be between 14 to 18 percent per year over the next 5 years. For comparison purposes, the January 1988 ESCOM charges were:

Demand = 16.36 E/KVA (US$ 6.67/KVA)
Energy = 3.37 C/kWh (US$ 0.014/kWh)

The SEB tariff is expected to increase proportionally to the increase in ESCOM charges.

For the purpose of this report, the tariff charged by SEB to its large commercial and industrial users will be used as the basis for establishing the economic feasibility of autonomous generation for self-sufficiency.

5.0 COST ESTIMATES AND FINANCING

Improvements in energy efficiency of sugar cane processing as well as increased capacity for electricity production will entail costs at the three Swazi sugar companies. These have been estimated by the team, and categorized as capital costs and operating costs.

5.1 Capital Costs

Table 5-1 shows the estimated capital costs of the modifications identified in the energy audits. These estimated costs have been broken down into equipment/material costs (shown as "Estimated CIF Cost") and installation costs. All costs are shown in U.S. dollars.

5.2 Operating Costs

For the purpose of this study, the only incremental operating costs assumed in the financial and economic analyses are those associated with the use of supplemental fuels such as coal. Additional operating costs, such as those for operation and maintenance, have been ignored as they are expected to have little or no impact on the results presented in this study.

5.3 Potential Sources of Financing

Funds for new cogeneration projects in the sugar industry could be raised from a number of sources, including:

- Straight equity investments
- International Finance Corporation (equity)
- Multi-lateral Development Banks (MDBs), such as the World Bank, African Development Bank, etc. (debt)
- Export credits (debt)
- Commercial bank loans (debt)

The above debt sources of financing are available at various repayment terms and conditions. The availability of these sources depends on the amount of the investment in the form of equity which sugar estates may be willing to make, and on the guarantees, or other "backstopping" mechanisms, which the government may install to mitigate potential financial and commercial risks. For the purposes of this study (Section 7: Economic and Financial Analyses), a relatively simple financial plan has been assumed as the basis for financial projections. This plan provides a mix of straight equity, export credits, and commercial bank loans. The

assumed amounts and terms are shown in Table 5-2. The plan is relatively conservative, and somewhat better financial terms may be obtained in the financing that eventually may be put in place.

TABLE 5-1

SUMMARY OF CAPITAL COSTS
(In Millions of US Dollars)

Location	Item	Estimated CIF Cost	Estimated Installation	Totals
Ubombo	8 MW Turbine Generator w/Condenser	4.5	.5	5.0
	Falling Film Evaporator	1.25	.25	1.5
	Misc. Mechanical	0.2	.2	.4
	Misc. Electrical	0.1	(Inc. Above)	.1
	Civil Works	---	.2	.2
				7.2
Simunye	135 t/h Steam Boiler	6.0	1.2	7.2
	Civil Works	---	.1	.1
				7.3
Mhlume	100 t/h Steam Boiler	4.5	.9	5.4
	5.3 MW Turbine Generator (Non Condensers)	2.7	.3	3.0
	6.0 MW Turbine Generator w/condenser	3.4	.4	3.8
	Misc. Mechanical	.3	.3	.6
	Misc. Electrical	.15	(Inc. Above)	.15
	Civil Work	---	.4	.4
				13.35

TABLE 5-2

ASSUMED FINANCIAL PLAN

Source	Percentage of Financing (%)	Assumed Interest Rate	Repayment Terms
Straight Equity	20	--	--
Export Credits	68	11	2 years grace
repayment			10 years
Commercial Bank Loans	12	14	2 years grace
repayment			4 years

6.0 INSTITUTIONAL CONSIDERATIONS/ISSUES

A brief review of the institutional issues which could affect the development of cogeneration at the three sites did not reveal any major barriers or obstacles. Apparently, there are no legal barriers which could preclude an increase in self generation by the sugar industry or the eventual sale of surplus generation to SEB. The factories' potential financial rewards may make an increase in generation financially attractive, particularly in the case of Ubombo.

Still, there are a number of economic policies which could be considered by the Swazi government to induce private investment in this area, particularly with the goal of encouraging generation for sales to the SEB:

- Providing guarantees for electricity purchases by SEB;
- Establishing a more rational pricing policy for the bagasse which is used for electricity generation;
- Providing guarantees for the availability of foreign exchange for foreign debt payments and the repatriation of profits on any foreign investments;
- Providing financing guarantees and/or other similar incentives.

The relative importance of these options varies with each sugar industry and national economic setting. In Swaziland, as in Mauritius and a number of other locations, bagasse pricing which allocates a significant share of bagasse energy revenues (or savings in electricity purchases) to cane growers fails to provide the proper incentive to mills to invest in improved power generation systems. A formula which provides a much increased share to the cogeneration enterprise, most likely the sugar company but possibly a new entity incorporating factory and growers, will be necessary in order to stimulate the large investments needed.

In addition, guarantees for electricity purchases by the SEB will be crucial for the case where sugar companies seek to invest in capacity to produce more power than their own process and irrigation needs. The SEB would legitimately seek, in turn, to guarantee that such power, whether firm capacity or intermittent, meets conditions of reliability and quality. The importance of these guarantees should not be underestimated, as they have proven essential in countries where cogeneration by industries has become a major source of electric power.

7.0 ECONOMIC AND FINANCIAL ANALYSIS

7.1 Alternatives to Cogeneration

Clearly, the cost of alternative energy sources determines the value of cogenerated electricity. For the Swaziland Electricity Board, there are three conventional options for increasing the supply of electricity:

(a) import electricity from the Republic of South Africa;

(b) develop new hydro-electric generating capacity; and,

(c) develop new coal-fired generating capacity.

The estimated costs of these options are briefly discussed below.

7.1.1 Import electricity from South Africa

Swaziland has an unusual electricity system. Out of the SEB's total electricity sales of 382 gigawatt-hours (GWh) in 1987, some 282 gigawatt-hours were purchased from ESCOM of South Africa via the two existing transmission links.

Although ESCOM's electricity has traditionally been very inexpensive, the price increased steadily through the 1980s. In January 1983, electricity costs were E 5.75/kVA for the capacity charge, and E 0.0109/kWh for the energy charge. By January 1989 these had increased to E 16.36/kVA and E 0.0337/kWh respectively. Using 1983 as the base year, and combing the capacity and energy charges into a single electricity price, the following index illustrates the rising costs of electricity (calculated at a load factor of 0.5).

Jan	1983	100
Jan	1984	186
Jan	1985	188
Jan	1986	201
Jan	1987	248
Jan	1988	273
Jan	1989	300

This is equivalent to an average annual increase of about 20 percent during this seven year period. At the same time, annual inflation was approximately 10 percent. Thus, Swazi electricity prices had a real increase of about 10 percent per year, equivalent to the South African (and Swazi) inflation rate. Note that the

Swazi and South African currencies are tied at parity by the Swazi Government, so differential inflation rates will not occur.

Since the capacity charge for electricity bought from ESCOM is high, the average cost of electricity is sensitive to the load factor. Based on 1989 prices the cost of electricity ranged from $0.046/kWh for a 0.3 load factor to $0.027/kWh when the load factor increases to 0.7 (with an exchange rate of E 2.45 to $1.00).

In the late 1970s SEB calculated that a third link to ESCOM was the least-cost option for capacity expansion. The ESCOM portion of the link is already in place, but the SEB portion has been delayed partly due to the utility's financial difficulties. SEB's capital expense in the completion of the third 30 MW transmission line into Swaziland should be in the order of $5 million. At a discount rate of 10 percent, over 30 years this expenditure adds approximately $0.005/kWh to the cost of imported electricity.

7.1.2 Hydro-electricity

Hydro-electricity provides 40.5 megawatts of Swaziland's total generating capacity of 50 megawatts. Current hydro generation is less than half of the country's estimated hydro-power potential. Several unexploited sites have been recently identified.

The cost of new hydro capacity can be estimated from the costs of the recently completed Luphohlo-Ezulwini hydro scheme. This project had a final cost of approximately $3,200/kW over the 1980 to 1984 construction period (in nominal prices). Taking these costs to be $4,000/kW in 1988 dollars, and discounting over a 30 year life with a 10 percent interest rate gives a cost of electricity of $0.097/kWh when the load factor is 50 percent. The calculation is simple, but the results suggest that the cost of new major hydro dams is substantially greater than the cost of imported electricity. (As noted, the SEB seeks to achieve higher load factors for its hydro facilities.)

It is possible that less expensive electricity could be generated by adding a hydro electric component to dams planned for river basin management schemes. One example is the proposed dam on the Komati river. This dam would be one of two to be built on the river--one in South Africa and the other in Swaziland.

Control of the Komati dam's water discharges would be strongly influenced by irrigation demands in the basin (and international agreement), thus limiting the extent to which the dam could contribute electricity at times of peak demand. (It is also possible that peaks may coincide with irrigation water release, because of the sugar industry's large role in both.) Preliminary estimates by SEB, however, indicate that a hydro-power component with a 10 megawatt capacity could be added to the proposed dam at a cost of $7 million (in 1986 prices). For a current cost of $1000/kW (i.e. $10 million), the economic cost of power from the additional

component would be Only $0.024/kWh (discounting over 30 years with a 10 percent interest rate; assuming a 50 percent load factor).

7.1.3 Coal-fired electricity

Another method of increasing electric generation is to install coal-fired power plants. Because of the small demand for electricity in Swaziland, the cost of electricity is relatively high. Under the following assumptions:

Capital cost, $1400/kW
Efficiency, 30 percent;
Coal price, $25 per tonne (Swazi coal); and,
Operation and maintenance, 5 percent of capital;

the cost of electricity is $0.085/kWh when the load factor is 0.5. The World Bank made a similar estimate in the 1987 UNDP/World Bank energy sector assessment. Consequently, a small coal-fired generator could not compete with the 10 megawatt Komati hydro scheme mentioned above, but may be cheaper than a dedicated hydro dam.

7.1.4 Comparison of alternatives to cogeneration

Other than the future possibility of some small hydro schemes, importing electricity is the cheapest option for increasing Swaziland's electricity supply at today's prices. (See Figure 7-1 for comparison of new electricity supply options.) But two questions remain: first, to what extent will ESCOM tariffs increase, and, second, what premium should be given to the increase in energy security derived from diversification into indigenous generation?

If the price for South African electricity remains constant in real terms, ESCOM's electricity is certainly cheap: only $0.033/kWh at a 0.5 load factor ($.038/kWh including SEB cost of third link). However, disruptions in service could occur in the future. In this context, it is worth noting that the Swazi economy is integrated with the economy of South Africa; as a result, the usual conflicts between neighboring nations are unlikely to occur. SEB may also be somewhat protected against ESCOM's potential abuses of monopoly power--the electricity prices charged to SEB are tied to ESCOM's rate to other bulk customers--but this only means that no price discrimination should occur. Furthermore, the third line into Swaziland will follow a different route than the existing lines, thus providing SEB's electricity supply with some protection from natural disaster and greater system stability and reliability.

SEB also has incurred a high level of debt from previous hydro projects. Consequently, it is limited in its ability to raise further capital for capacity expansion. The third transmission line from ESCOM has the advantage of

FIGURE 7-1
Comparison of Conventional Electricity Supply Options

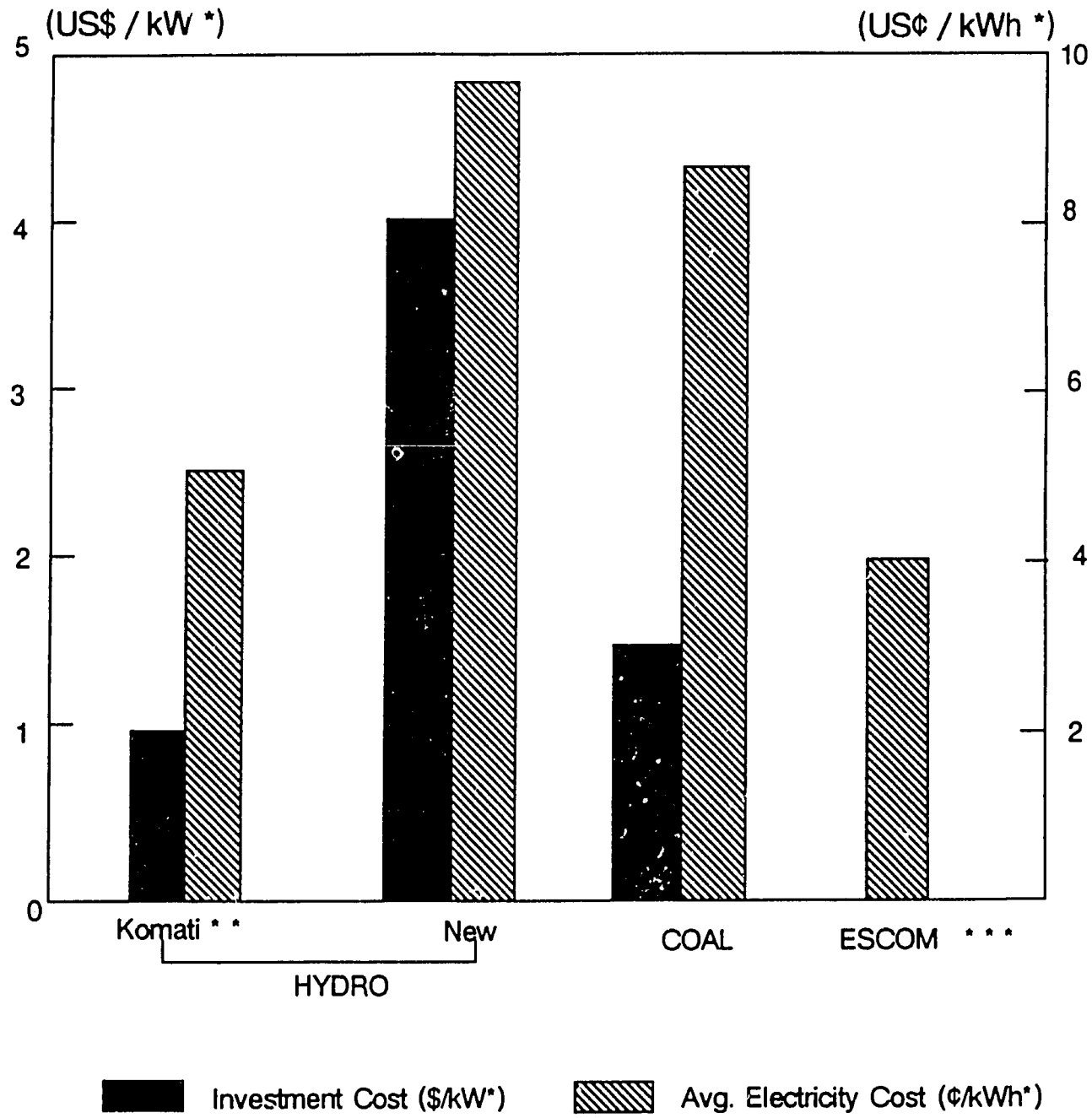

* estimated at 50 % load factor
* * based on preliminary SEB estimates
* * * ESCOM average cost of electricity based on load factor range of 0.3 to 0.7

minimizing the utility's capital requirements. Cogeneration at the sugar mills would also require minimal capital investments from the SEB.

7.2 Economic Analysis of Cogeneration

7.2.1 Assumptions

The economics of electricity generation at the three sugar mills were reviewed in order to compare the cost of electricity generation with the cost of electricity purchases from ESCOM.

These calculations were based on several assumptions. Load curves for electricity purchases were available only for the Ubombo mill. The same load profile was assumed for all mills, implying an average annual load factor of approximately 0.5.

The demand charge for ESCOM electricity is based on monthly peak kilovolt Ampere (kVA) consumption. Therefore, the impact of cogeneration on SEB's annual ESCOM bill depends upon the monthly incremental change in the SEB load factor for imports. This figure, however, was not available. Instead, the value of electricity was calculated using the load factor for the factories. The calculations assume a power factor of one.

The following economic calculations do not include the costs of electricity distribution; no information was available on the impact of cogeneration on transmission and distribution systems. Therefore, the team assumed that the opportunity cost of electricity generation was equal to the cost of SEB's electricity purchases from ESCOM. (Additional costs for the completion of the third transmission line were excluded to be conservative.) The analysis considers numerous scenarios with different electricity prices converted at an exchange rate of E 2.45/$1.

The calculations incorporate the following range of electricity prices (at .5 load factor):

current price for ESCOM purchases, or $0.033/kWh
a 20 percent increase, or $0.039/kWh;
a 40 percent increase, or $0.045/kWh;
a 60 percent increase, or $0.052/kWh;
an 80 percent increase, or $0.058/kWh;
a 100 percent increase, or $0.066/kWh;

The team assumed that the bagasse used to generate electricity had no alternative use, and that as a result it had no value. The cost of the coal used in two of the mills was set equivalent to the cost of imported South African coal (82.5 E/tonne or $33.67/tonne).

7.2.2 Results

Ubombo Ranches

Alternative 1. Self-sufficiency with existing practices.

Under this scenario an additional 43,884 megawatt-hours per year would be generated for a capital investment of $7.2 million. The economic results for cogeneration at different electricity prices are shown in Table 7-1. This is an attractive investment which has a rate of return of 14 percent, even at current prices for electricity. The benefit-cost ratio when capital is discounted with a 10% social discount rate is also shown in Table 7-1.

Alternative 2. Electricity generation with reduced imbibition rates.

The same electricity generation technology combined with a reduction in the water used for sugar extraction would permit the generation of a total additional 63,441 megawatt-hours per year from the same quantity of bagasse. Assuming the surplus electricity maintains the same load profile (i.e. a load factor of approximately 0.5), the investment in cogeneration gives a rate of return of 21 percent at current electricity import prices (see Table 7-1).

Simunye

Alternative 1. Self-sufficiency with existing practices.

An investment of $7.3 million will generate 40,757 megawatt-hours per year. However, since the mill's bagasse supply is inadequate, 13,519 tonnes of coal per year must be purchased to help generate this electricity. Table 7-2 shows the rate of return on capital for the investment in cogeneration. At current electricity prices, the rate of return is only 4 percent. The rate of return will increase above 10 percent with electricity tariffs that are at least 40 percent higher than present costs.

Alternative 2. Self-sufficiency with reduced imbibition rates.

For this scenario the mill generates the same quantity of electricity (i.e. the 40,757 megawatt-hours needed for self-sufficiency), but requires slightly less coal (i.e. only 11,601 tonnes per year). At current electricity prices, this alternative marginally increases the rate of return on capital to 5 percent (see Table 7-2).

Mhlume

Alternative 1. Self-sufficiency with existing practices.

As with Simunye, some coal must be burned to reach electricity self-sufficiency. A total of 43,402 megawatt-hours per year is generated with the use of 18,536 tonnes of coal. The capital investment is $13.35 million. For Mhlume, this is an unattractive investment at today's electricity prices (see Table 7-3). Indeed, a barely positive rate of return on capital is only obtained with electricity prices that are at least 40 percent above current levels.

Alternative 2. Self-sufficiency with reduced imbibition rates.

For this scenario Mhlume's electricity demand of 43,402 megawatt-hours per year is generated with 10,285 tonnes of coal. Although this alternative increases the rate of return to capital (see Table 7-3), the rate is only one percent for current prices.

7.3 Financial Analysis of Cogeneration

7.3.1 Assumptions

The economics of the cogeneration options have been estimated from a national perspective. This section examines the financial returns of cogeneration investments for each of the factories.

There are several different factors in these calculations. First, the mills currently purchase electricity from SEB at a tariff of $0.048/kWh--a price that is linked to the cost of ESCOM electricity imports. Second, the factories must give sugar cane farmers an additional payment for the bagasse that is used to generate electricity. The total payment for bagasse each year (E/year) is:

Electricity exported x Price of coal x 0.1724[6]
(MWh/yr) (E/tonne)

[6] The bagasse pricing formula is derived from the principle that some portion of revenues deriving from use of the bagasse go to the cane grower and has been endorsed by Mr. A. B. Ravno, Director of the Sugar Milling Research Institute in Big Bend, Swaziland. It is uncertain if this factor incorporates adjustments for bagasse fuel value relative to coal, or for bagasse combustion efficiency relative to coal. At current prices for coal, this formula produces approximately US $0.006 per kWh to growers. To the team's knowledge, scant electricity has been sold into the SEB grid.

Our analysis assumes that the pricing formula applies to all co-generated electricity using bagasse, and that the price of the coal used in the formula is equivalent to the cost of imported South African coal.

Finally, as in the economic analysis, the financial calculations assume an exchange rate of E 2.45/$1 and a price for coal of E 82.5/tonne. The calculations include the following SEB electricity price scenarios (at a .5 load factor):

Current price for SEB electricity, or 0.048/kWh;
a 20% increase, or $0.057/kWh;
a 40% increase, or 0.066/kWh;
a 60% increase, or 0.078/kWh;
an 80% increase, or 0.085/kWh;
a 100% increase, or 0.095/kWh.

Three different prices for bagasse were also considered.

For each mill, the team assumed that cogeneration investments would be financed by a combination of export credits (68 percent of total cost), commercial bank loans (12 percent of total cost), and equity (the local cost, or 20 percent of total cost) (see Table 5-2). Based on these assumptions, the team calculated the rate of return on equity. Taxes were not factored into the calculations. The financial returns to each mill's investments are given below.

7.3.2 Results

Ubombo

Tables 7-5 and 7-6 show returns to equity at Ubombo for Alternatives 1 and 2.

For this mill, cogeneration is a very attractive investment. Even with present SEB electricity prices, bagasse prices, and no changes in factory operating practices (i.e. Alternative 1), the investment at Ubombo yields a 91 percent rate of return. If the mill implemented the changes under Alternative 2, the rate of return on equity would be 141% with current bagasse and electricity prices.

Simunye

Tables 7-7 and 7-8 show the results for Simunye.

Under the same base scenario outlined above, the rate of return on equity is 40 percent. If the price of electricity were to increase by 20 percent, the rate of return would go up to 70 percent. The investment also becomes slightly more attractive with a reduction in the cost of bagasse. Alternative 2, on the other

hand, would yield a higher rate of return for each bagasse and electricity price combination.

Mhlume

Tables 7-9 and 7-10 show the results for Mhlume.

Under Alternative 1, investment in cogeneration is unattractive without a 40 percent increase in SEB prices. Even with free bagasse, cogeneration investments are unlikely while SEB's relatively low electricity tariffs remain in effect.

With Alternative 2, a 20 percent increase in the price of electricity is needed to yield a 26 percent return on equity. Free bagasse, with no increase in SEB electricity prices, would yield a rate of return of 21 percent.

7.4 Economic and Financial Analysis Conclusions

Given the team's set of assumptions, electricity generation is financially attractive at Ubombo. Without changing sugar production practices or selling electricity to the grid, high rates of return on capital are possible. Alternative 2 is even more attractive; under this scenario, exporting cogenerated electricity to the SEB merits serious consideration. At the Simunye mill, electricity self-sufficiency is also financially realistic. Cogeneration, however, is much less appealing at Mhlume. In this case, it is unlikely that the factory management would wish to invest in cogeneration.

In economic terms, current electricity costs, electricity cogeneration is clearly attractive only at the Ubombo mill. Indeed, if imbibition rates are reduced, the investment in cogeneration would yield a respectable 21 percent return on capital.

The situation is less favorable at the other two mills. For a 10 percent rate of return on capital, cogeneration at Simunye would require an increase of 30 to 40 percent (depending on the alternative) above the base ESCOM tariffs for electricity (see Table 7-4). Note that the increase is equivalent to the range of $0.042/kWh to $0.045/kWh. The increased price is still less than the price for coal-fired power (approximately $0.085/kWh) or a major hydro project (approximately $0.097/kWh).

Cogeneration at Simunye could still be an inexpensive way to increase Swazi generation capacity. If there are no changes in electricity transmission and distribution costs, the state would have to pay an energy security premium of 30 to 40 percent to justify a cogeneration investment at this site. However, it is possible that cogeneration would save some of the utility's transmission and

distribution expenditures. The SEB charges its consumers about $0.015/kWh more than the price it pays for ESCOM electricity. This tariff covers the cost of generation within Swaziland and the distribution of electricity imports. Assuming cogeneration saves perhaps $0.01/kWh (the $0.005/kWh to be added by the new ESCOM transmission link plus the $0.005/kWh saved on distribution), the price difference between ESCOM's electricity and Simunye's electricity would be negligible.

For Mhlume much higher value electricity is needed to make investment in cogeneration worthwhile (see Table 7-4). If alternative 2 is implemented, the cost of electricity with a 10 percent return on capital would be $0.06/kWh. This is still competitive with other methods of generating electricity, but is much more expensive than imported ESCOM power. It is unlikely that such an energy security premium could be justified in Swaziland for this third site.

TABLE 7-1

Economics of Cogeneration at Ubombo under Alternative 1

Cost of ESCOM Electricity	Internal rate of return on capital (per cent)	Benefit-Cost ratio with a 10% social discount rate
Current price	14	1.26
20% increase	17	1.51
40% increase	20	1.76
60% increase	23	2.02
80% increase	26	2.26
100% increase	29	2.52

Economics of Cogeneration at Ubombo under Alternative 2

Cost of ESCOM Electricity	Internal rate of return on capital (per cent)	Benefit-Cost ratio with a 10% social discount rate
Current price	21	1.82
20% increase	25	2.18
40% increase	30	2.55
60% increase	34	2.91
80% increase	38	3.28
100% increase	43	3.64

TABLE 7-2

Economics of Cogeneration at Simunye under Alternative 1

Cost of ESCOM Electricity	Internal rate of return on capital (per cent)	Benefit-Cost ratio with a 10% social discount rate
Current price	4	0.63
20% increase	8	0.86
40% increase	11	1.09
60% increase	14	1.32
80% increase	18	1.55
100% increase	20	1.78

Economics of Cogeneration at Simunye under Alternative 2

Cost of ESCOM Electricity	Internal rate of return on capital (per cent)	Benefit-Cost ratio with a 10% social discount rate
Current price	5	0.71
20% increase	9	0.94
40% increase	12	1.17
60% increase	16	1.40
80% increase	19	1.63
100% increase	21	1.69

TABLE 7-3

Economics of Cogeneration at Mhlume under Alternative 1

Cost of ESCOM Electricity	Internal rate of return on capital (per cent)	Benefit-Cost ratio with a 10% social discount rate
Current price	-	0.27
20% increase	-	0.41
40% increase	2	0.54
60% increase	5	O.67
80% increase	7	0.81
100% increase	9	0.94

Economics of Cogeneration at Mhlume under Alternative 2

Cost of ESCOM Electricity	Internal rate of return on capital (per cent)	Benefit-Cost ratio with a 10% social discount rate
Current price	1	0.45
20% increase	3	0.58
40% increase	6	0.72
60% increase	8	0.85
80% increase	10	0.99
100% increase	12	1.12

TABLE 7-4

Approximate electricity price at
which cogeneration projects give at least a 10% return on capital

Mill	Alternative	Price increase above current level (%)
Ubombo	1	0
Ubombo	2	0
Simunye	1	40
Simunye	2	30
Mhlume	1	more than 100
Mhlume	2	80

TABLE 7-5

FINANCIAL ANALYSIS AT UBOMBO
ALTERNATIVE I

Price of Bagasse	Cost of Electricity Purchased from SEB	Internal Rate of Return (percent)
Current prices	Current prices	91
Current prices	20 percent increase	118
One half of current prices	Current prices	101
Free	Current prices	111

TABLE 7-6

FINANCIAL ANALYSIS AT UBOMBO
ALTERNATIVE 2

Price of Bagasse	Cost of Electricity Purchased from SEB	Internal Rate of Return (percent)
Current prices	Current prices	141
Current prices	20 percent increase	177
One half	Current prices	154
Free	Current prices	168

TABLE 7-7

FINANCIAL ANALYSIS AT SIMUNYE
ALTERNATIVE 1

Price of Bagasse	Cost of Electricity Purchased from SEB	Internal Rate of Return (per cent)
Current prices	Current prices	40
Current prices	20 percent increase	70
One half	Current prices	52
Free	Current prices	62

TABLE 7-8

FINANCIAL ANALYSIS AT SIMUNYE
ALTERNATIVE 2

Price of Bagasse	Cost of Electricity Purchased from SEB	Internal Rate of Return (per cent)
Current prices	Current prices	46
Current prices	20 percent increase	76
Current prices	40 percent increase	101
Current prices	Current prices	58
Current prices	Current prices	69

TABLE 7-9

FINANCIAL ANALYSIS AT MHLUME
ALTERNATIVE 1

Price of Bagasse	Cost of Electricity Purchased from SEB	Internal Rate of Return (percent)
Current prices	Current price	nil
Current prices	20 percent increase	11
Current prices	40 percent increase	29
Current prices	60 percent increase	49
One half	Current prices	3
Free	Current prices	8

TABLE 7-10

FINANCIAL ANALYSIS AT MHLUME
ALTERNATIVE 2

Price of Bagasse	Cost of Electricity Purchased from SEB	Internal Rate of Return (percent)
Current prices	Current prices	9
Current prices	20 percent increase	26
Current prices	40 percent increase	46
Current prices	60 percent increase	63
One half	Current prices	14
Free	Current prices	21

8.0 CONCLUSIONS

Under the study's set of assumptions, electricity generation is both economically and financially attractive at Ubombo. Even without sales of surplus electricity to the grid or changes in sugar production practices, high rates of return on capital are possible. If Alternative 2 is implemented, the Ubombo factory should seriously consider export of electricity to the SEB.

At Simunye, electricity self-sufficiency is financially attractive. The economic return on these investments, however, depends upon the marginal change in transmission and distribution costs. With present costs, the investment in cogeneration would require an energy security premium of some 30 to 40 percent. It is also quite possible that the cogeneration investment at Simunye would save $0.01/kWh (due to reduced transmission and distribution costs) and yield a 10 percent return on capital. After Ubombo, low-cost hydro and the third ESCOM link, cogeneration at Simunye is the least cost method of establishing new Swazi generating capacity.

Cogeneration is less attractive at Mhlume. Given the poor returns on capital, it is unlikely that the factory management would wish to invest in cogeneration. Furthermore, there are no economic incentives for the government to subsidize the operation. If domestic electricity generation is a high government priority, a separate coal-fired power station would be a more suitable investment than cogeneration options at Mhlume.

The team's proposals create an additional capacity of 13 megawatts at Ubombo and 10 megawatts at Simunye. Together, this accounts for more than half of the SEB's current installed capacity and 70 percent of the third link to ESCOM. Cogeneration at these two mills can, therefore, make a major contribution to the Swazi power sector.

It should be kept in mind, however, that although this study's general conclusions regarding the economic and financial aspects are very sound, exact figures such as the specific economic and financial rates of return, and capital costs, etc., are approximate and, therefore, more precise numbers should be established after exhaustive analyses.

This study has focused on the issue of self generation to meet the power needs of the three sugar estates. There is also significant potential for electricity generation on a year-around basis for sale to the SEB. This could be achieved at a lower marginal cost than other alternatives for new generating capacity. In order to encourage the sugar mills to sell excess generation potential to the SEB, the Swazi government should first take on a more proactive role in promoting power generation from indigenous sources. In particular, several policies could be implemented to provide the mills with investment incentives. These policies would include financial and commercial guarantees, rational fuel pricing (particularly in the case of bagasse), and purchase prices for the electricity sold to SEB which provide adequate profit margins and returns to capital.

APPENDIX

ENERGY AUDITS

TABLE OF CONTENTS

1.0 **SUMMARY**

2.0 **UBOMBO RANCHES, LTD.**

2.1.1 Existing Energy System Specifications
2.1.2 Steam and Power Generation
2.1.3 Bagasse Availability
2.1.4 Present Energy Requirements for Irrigation
2.2 Modifications for Higher Energy Potential
2.2.1 Imbibition Rate Reduction
2.2.2 Improvement of Boiler Efficiency
2.2.3 Evaporator System Modification
2.2.4 Turbo-generators and Prime Movers
2.3 Surplus Energy Generation
2.3.1 Alternative 1
2.3.2 Alternative 2
2.4 Generation Profile
2.5 Steam Generation Potential

3.0 **SIMUNYE SUGAR ESTATE**

3.1.1 Existing Energy System Specifications
3.1.2 Steam and Power Generation
3.1.3 Energy Requirements for Irrigation
3.2 Modifications for Higher Generation Potential
3.2.1 Imbibition Rate Reduction
3.2.2 Improvements of Boiler Efficiency
3.2.3 Evaporator Modifications
3.2.4 Turbo-Generators and Prime Movers
3.3 Surplus Energy Generation
3.3.1 Alternative 1
3.3.2 Alternative 2
3.4 Steam Generation Potential
3.5 Generation Profile

4.0 MHLUME SUGAR CO.

4.1.1 Existing Energy System Specifications
4.1.2 Steam and Power Generation
4.1.3 Energy Requirements for Irrigation
4.2 Modifications for Higher Generation Potential
4.2.1 Imbibition Rate Reduction
4.2.2 Improvements of Boiler Efficiency
4.2.3 Evaporator Modifications
4.2.4 Turbo-generators
4.3 Surplus Energy Generation
4.3.1 Alternative 1
4.3.2 Alternative 2
4.4 Steam Generation Potential
4.5 Generation Profile

1.0 SUMMARY

A team of specialists, under contract by the Office of Energy of USAID, conducted energy audits of the three sugar factories in Swaziland. The purpose of the audits was to identify modifications in each factory which could maximize the use of available thermal energy derived from bagasse. The ultimate goal was to increase electricity generation to the point where the factories could eliminate purchases of power for cane field irrigation and factory usage. The three factories surveyed were:

- Ubombo Ranches, Ltd.
- Simunye Sugar Estate
- Mhlume Sugar Co.

The team's reviews suggest that substantial increases in energy efficiency could be obtained by reducing the current imbibition rates (between 300 percent and 400 percent on fiber) to the more commonly used rates in the 200 percent to 300 percent range. Since this reduction would represent a major departure from current operating philosophy, its effect has been evaluated separately at each factory.

The results of the audits also indicate that energy self-sufficiency, using bagasse as the only source of fuel, could be achieved at Ubombo Ranches, Ltd. In fact, with a reduction in imbibition rates, that site could produce a surplus of energy for export to the national grid. The other sites--even with reductions in their imbibition rates--can achieve energy self-sufficiency only through supplemental burning of coal.

2.0 UBOMBO RANCHES, LTD.

2.1.1 Existing Energy System Specifications

Boilers

Steam conditions 31 bar, 385°C

2	22 t/h boiler with dumping grate	B & W
1	27 t/h boiler with dumping grate	B & W
1	22 t/h boiler with chain grate stoker	B & W
1	27 t/h boiler with chain grate stoker	B & W
	Equipped with air heaters and economizer arranged for bagasse and coal firing; Efficiency 75% with bagasse (NCV).	
1	70 t/h with dumping grade - J. Thompson (for bagasse only; efficiency 77%)	

Total MCR - 190 t/h

Turbines

Turbo - Alternators			Water rates (kg/kWh)
1 MW	-	Metro Vickers back pressure	12.9
1.5/ 2.0 MW	-	Metro Vickers combined passout - condensing	11.7/6.4
4 MW	-	Allen back pressure	8.4
3.5 MW	-	Allen back pressure	9.7
3.0 MW	-	combined passout - condensing	11.3/5.1

Total installed capacity - 13.0 MW

Prime Movers

	Water rates (kg/kWh)
Shredder 1 x 1.56 MW Elliot	17.0
Mills 1 x .56 MW Brotherhood 5 x .45 MW Brotherhood	 15.0 15.0
Diffusion dewatering Mill 1 x .56 MW Elliot	15.0
Feedwater pumps 1 x .25 MW	N/A

Total Installed Capacity - 5.16 KW

2.1.2 Steam and Power Generation

Bagasse Gross Energy Potential

Bagasse on cane - 29.6%; NCV 3,900 BTU/lb; 1,873 kcal/kg. (See Flow Diagram 2-1 and Sankey Diagram 2-2). The gross bagasse energy potential - based upon 280 TCH.

Average value	155 x 10^6 kcal/h
Steam conditions 31 bar; 385°C. Feedwater temperature 110°C; result in a steam rate of	63.7% on cane 178.3 t/h
The plant is using an average	59.6% on cane 167.0 t/h
The sugar process requires	53.5% on cane 150.0 t/h

Power generation including .8 MW export is 10.7 MW

Power for plant without export	1.48 kW/TCD
Bypass steam is approximately	8.9% on cane 25.0 t/h

DIAGRAM 2-1
Ubombo Ranches, Ltd.
Flow Diagram

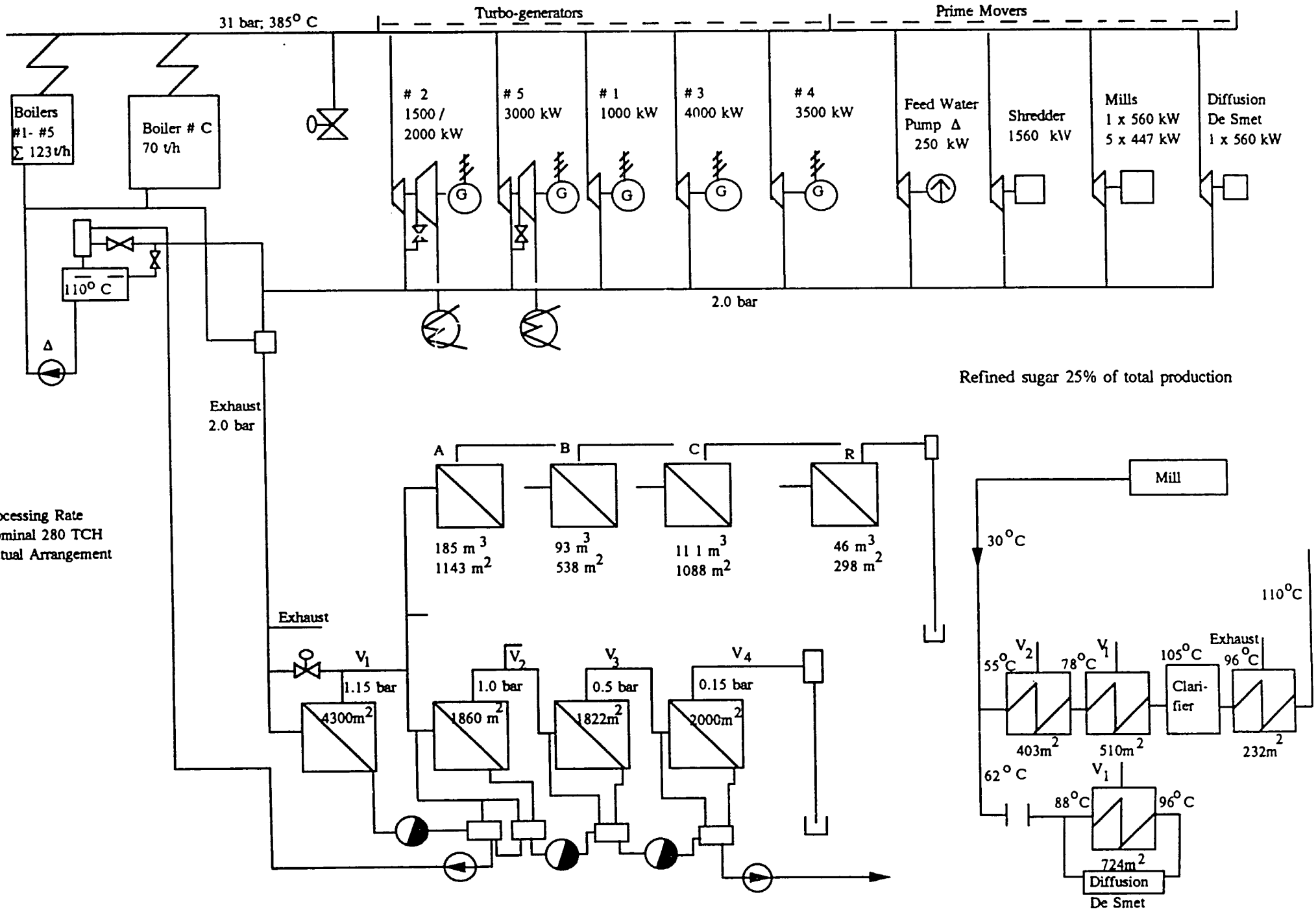

DIAGRAM 2-2
Ubombo Ranches, Ltd.
Sankey Diagram

Energy Flow; Mill Capacity 280 TCH; Bagasse 29.6 % on Cane; NCV 1873 kcal / kg

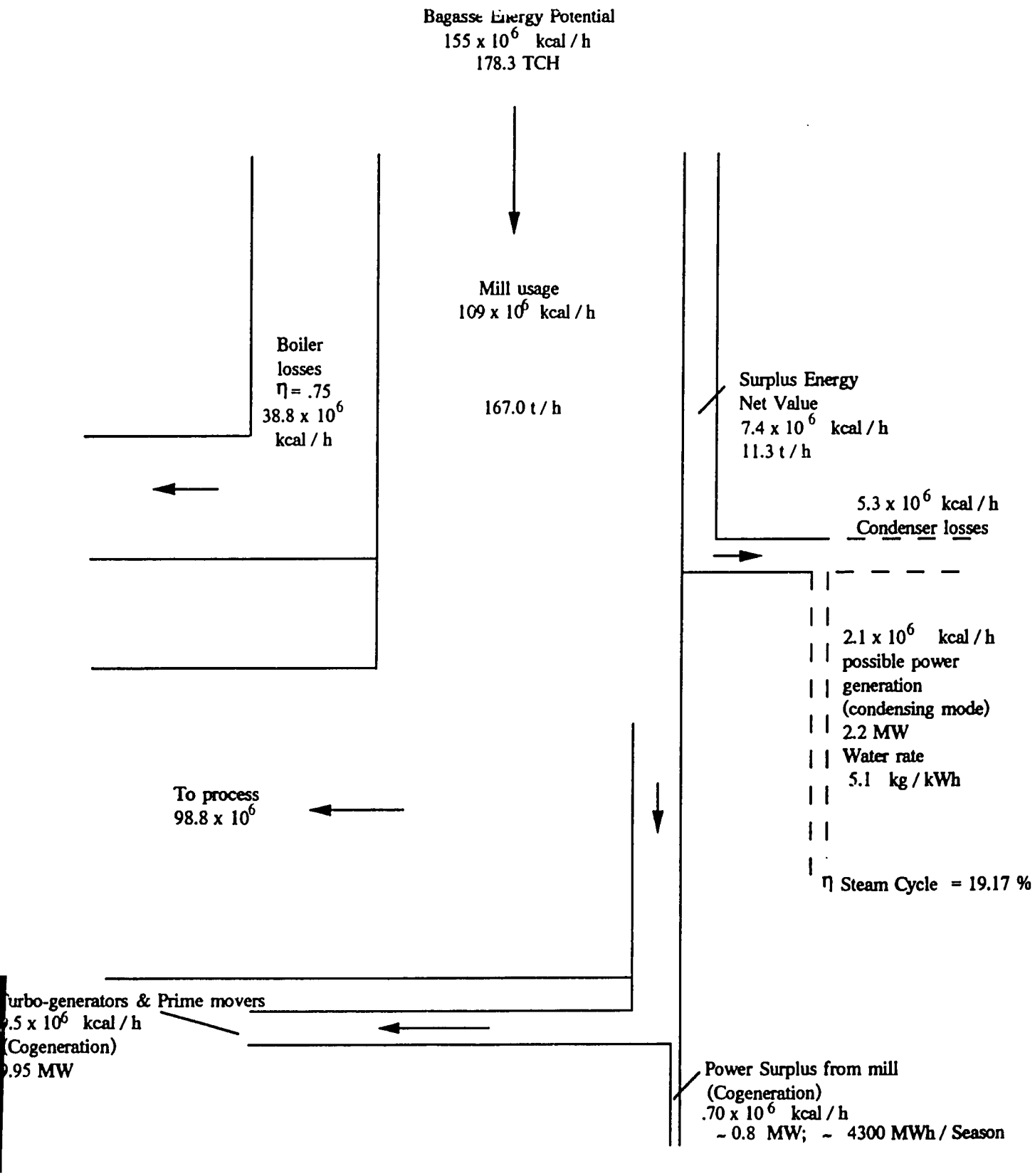

TABLE 2-3

Ubombo Fiber Rates
(averages 1984 - 1988)

Month	Fiber % Cane	Fiber Milled[1] t/h	Bagasse % on Cane	Bagasse t/h	Energy Potential NET x 10^6
May	13.18	37.45	27.24	76.27	107
June	13.13	37.31	27.14	75.99	106
July	13.80	39.21	28.52	79.36	112
August	14.05	39.92	29.04	81.31	114
September	15.09	42.88	31.19	87.33	122
October	15.59	44.30	32.22	90.22	126
November	15.97	45.38	33.01	92.43	129
December	16.36	46.49	33.82	94.70	133

[1]Fiber in bagasse 48.38% (1986 - 87); 280 tonnes of cane per hour; 1,234,000 tonnes of cane per year.

2.1.3 Bagasse Availability

The net value of surplus bagasse (seasonal average/boiler efficiency .75) is 7.4 x 10^6 kcal/h or 2.2 MW in condensing mode (Water rate 5.1 kg/kWh) representing a bagasse surplus of 1.9% on cane or 5.3 t/h.

This figure is based upon:
14.3% fiber on cane and 29.6% bagasse on cane

The changes in fiber rates over the crushing season are shown in Table 2-3 and the extreme scenarios are shown as follows:

Scenario 1:

Bagasse Fiber	13.18% on cane
Bagasse	27.24% on cane; NCV 1,873 kcal/kg

Gross Bagasse Energy Potential:
$280 \times 10^3 \times .2724 \times 1{,}873 = 143 \times 10^6$ kcal/h

Net Energy Values (boiler efficiency .75):	107 x 10^6 kcal/h
Energy Usage of mill:	109 x 10^6 kcal/h
Deficit:	2 x 10^6 kcal/h

Bagasse deficit - .51% on Cane
or 1.42 t/h (boiler efficiency .75)

Scenario 2:

Bagasse Fiber	16.36% on cane
Bagasse	33.82% on cane; NCV 1,873 kcal/kg

Gross Bagasse Energy Potential:
$280 \times 10^3 \times .3382 \times 1{,}873 = 177 \times 10^6$ kcal/h

Net Energy Values (eff. boiler .75):	133 x 10^6 kcal/h
Energy Usage of Mill	109 x 10^6 kcal/h
Surplus:	24 x 10^6 kcal/h

Bagasse Surplus - 6.1% on Cane
or 17.1 t/h (boiler efficiency .75)

2.1.4 Present Energy Requirements for Irrigation

Information is taken from the Ubombo records but was only available for Ubombo Ranches (5,861 ha).

The energy used (1987-88) was:	23,570 MWh/year
Respective data for Farm 1 - 19 (7,743 ha) has been established to be:	17,782 MWh/year
Total Demand for Irrigation	41,352 MWh/year
As described under 2.1.2, the mill produced .8 MW during the working season resulting in:	4,300 MWh/year
Power required for mill during off season	1,857 MWh
The SEB purchases (approximately):	38,909 MWh/year

Weather conditions influence widely the power demand for irrigation. Occurrence of peak loads up to 8.8 MW must be expected particularly toward the end of the crushing season, but also during the off season.

Coal is used to supplement bagasse. The irrigation during the off season is exclusively maintained with power from the SEB.

2.2 Modifications For Higher Generation Potential

The following modifications can be made in singular or combined fashion. However, their relative implications must be observed.

2.2.1 Imbibition Rate Reduction

As the foregoing evaluation shows, the demand of process steam is about 25 t/h (8.9% on cane) higher than the exhaust steam from the turbo-generators and prime movers. Therefore, emphasis should be given first to the reduction of the heating steam flow to the evaporator system.

Accordingly, calculations have been made with changes in the imbibition rates to 200 and 300 percent of fiber contents. The results of these calculations, along with the corresponding potential increases in energy availability, are summarized in Table 2-4.

The respective savings are remarkable and could bring the agro-industrial complex close to self-sufficiency. To be able to make full use of such measure, particularly to take over the peak loads for irrigation described in 2.1.4, additional generating capacity will be required as described in 2.2.4; the addition of capacity for the turbo-generators is indicated.

2.2.2 Improvement of Boiler Efficiency

The small B&W Boilers have an average efficiency with bagasse of 75% (NCV). The No. 3 Boiler with dumping grates can be provided with a more suitable combustion chamber for bagasse burning, by providing a more effective heat deflector to obtain a higher temperature in the combustion chamber. With this measure it may be possible to raise the boiler efficiency by 3 - 4 percent.

The boiler with chain grate stokers should not be altered and should remain as dual fuel units.

2.2.3 Evaporator System Modification

Because the mill's existing policy seems to be to maximize sucrose extraction from cane, it may be assumed that there will be only limited incentive to implement a substantial reduction of the imbibition rates.

Therefore, further improvements could be achieved only with the implementation of some changes to the existing evaporator system shown in Diagram 2-5.

Following the common practices in the beet sugar industry, the conversion to a pressure/vacuum evaporator scheme is possible at Ubombo.

As shown in Diagram 2-6, a group of Falling Film evaporators with a total heating surface of approximately 3,200 m^2 could be located in front of the existing Kestner units. The latter will then become the second step of the evaporator system. All vapor bleeding should remain in place since they will be shifted one step downstream with their respective evaporator cells.

Table 2-7 shows the energy saving potential for this alternative without taking into consideration the options described under 2.2.1 and 2.2.2.

The advantage of the Falling Film Evaporator system is the substantially higher heat/transmission rate which can be used and the possibility to operate with extremely low temperature differences. The boiling point in this system refers to the average concentration in the heating tubes, while in a conventional evaporator it must refer to the final concentration in the respective cell. The retention time is only 30% of a conventional evaporator and therefore, color build-up or sugar destruction can be reduced.

2.2.4 Turbo-generators and Prime Movers

The thermodynamic performance of most of the existing power units is rather poor with the exception of the 4.0 MW Allen back pressure turbine, which has a water rate of approximately 8.4 kg/kWh.

The cogeneration system, turbo-generators, and prime movers combined, are providing approximately 10.7 MW (1.6 kW/TCD) with an average water rate of 11.7 kg/kWh.

Under these conditions, and after the deduction of 3 t/h steam going to the condensers of turbo-generator No. 2 and No. 5, an exhaust steam flow of 123 t/h is produced. The latter can be readily absorbed by the following thermo physical process and approximately 25 t/h live steam must be furthermore bypassed directly to the evaporators.

All prime movers are without automatic nozzle group regulation. This has quite a negative influence upon the respective water rates, since the load factors of all units are only 60% to 90%, thus severely jeopardizing their thermodynamic efficiencies. It should be noted that with an improvement of the average water rate to 10 kg/kWh the cogeneration potential can be increased by 2.0 MW or 11,000 MWh/season.

In order to take advantage of the potential energy surplus, which could be used to meet the variable load demand required for irrigation, it is recommended that an 8.0 MW passout/condensing turbo-generator be added. The maximum capacity of this unit should be reached in 100% condensing mode, the latter to satisfy the conditions during the off season.

TABLE 2-4
Ubombo Ranches, Ltd.
Imbibition Rates and Energy Surplus Potential

Imbibition % on fiber	Steam to Evaporators % on cane (t/h)	Live Steam % on cane (t/h)	Bagasse Surplus % on cane t/h	Energy Surplus Net kcal x 10^6/h	Condensing Service (W.R. 4.25) i" 763; i"110	MWh/ Season (231 days)
410	53.5	59.6	--	--	--	--
	150	167	--	--	--	--
300	48.0	54.3	2.49	9.79	3.52	19,577
	134	152	6.97			
200	44.7	51.1	3.98	15.66	5.64	31,283
	125	143	11.15			

280 TCH; bagasse 29.6% on cane; 82.9 t/h; boiler efficiency .75, 1,873 kcal/kg

DIAGRAM 2-5
Ubombo Ranches, Ltd.
Existing Evaporator System

Δ Cell II (Kestner) Surface too small for present arrangement

Factory Capacity 280 TCH

Imbibition 410% on fiber

Mixed Juice 12.09 Bx; 127.84% on cane
Clarifying Juice 12.22 Bx; 126.48% on cane
Syrup 68.80 Bx; 22.45% on cane
Evaporation 126.48 - 22.45 = 104.03% on cane

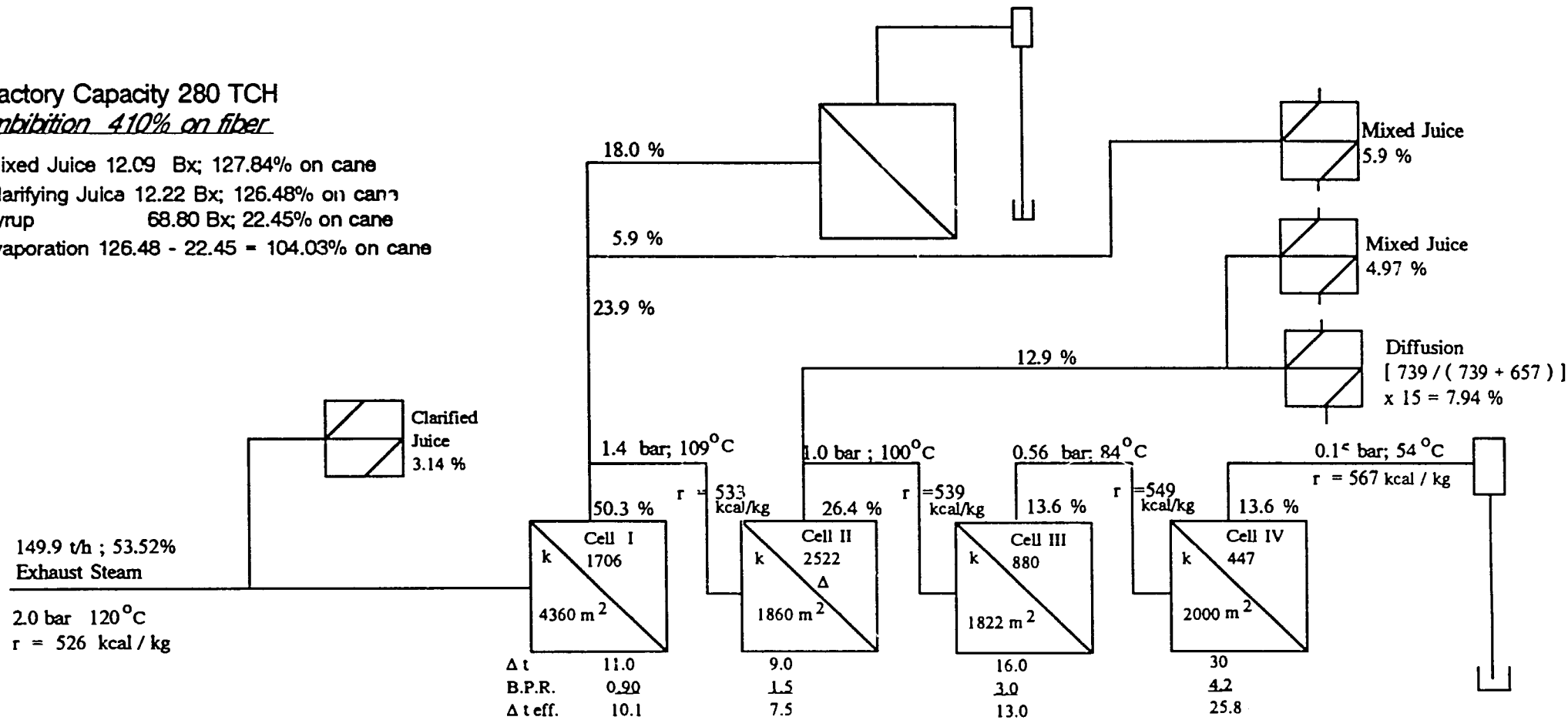

4 x Q + 49.7= 104.03%
Q =13.58

Cell I	Kestner	Q + 23.9 + 12.9
Cell II	Roberts	Q + 12.9
Cell III	Roberts	Q
Cell IV	Roberts	Q

104.03

Steam to Cell I

13.58 + 23.9 + 12.9 =	50.38
Clarifiying Juice Heat	3.14
Total % on cane	53.52
t / h	149.9 t / h

Ubombo Ranches, Ltd.
Modified Evaporator System

Δ Shift of Cell 702 m^2 from actual Cell group III to actual Cell II to obtain 2562m^2 heat surface
* Use of last CellsV for capacity (Bx) control

Factory Capacity 280 TCH

Mixed Juice 12.09 Bx; 127.84% on cane
Clarifying Juice 12.22 Bx; 126.48% on cane
Syrup 68.80 Bx; 22.45% on cane
Evaporation 126.48 - 22.45 = 104.03% on cane

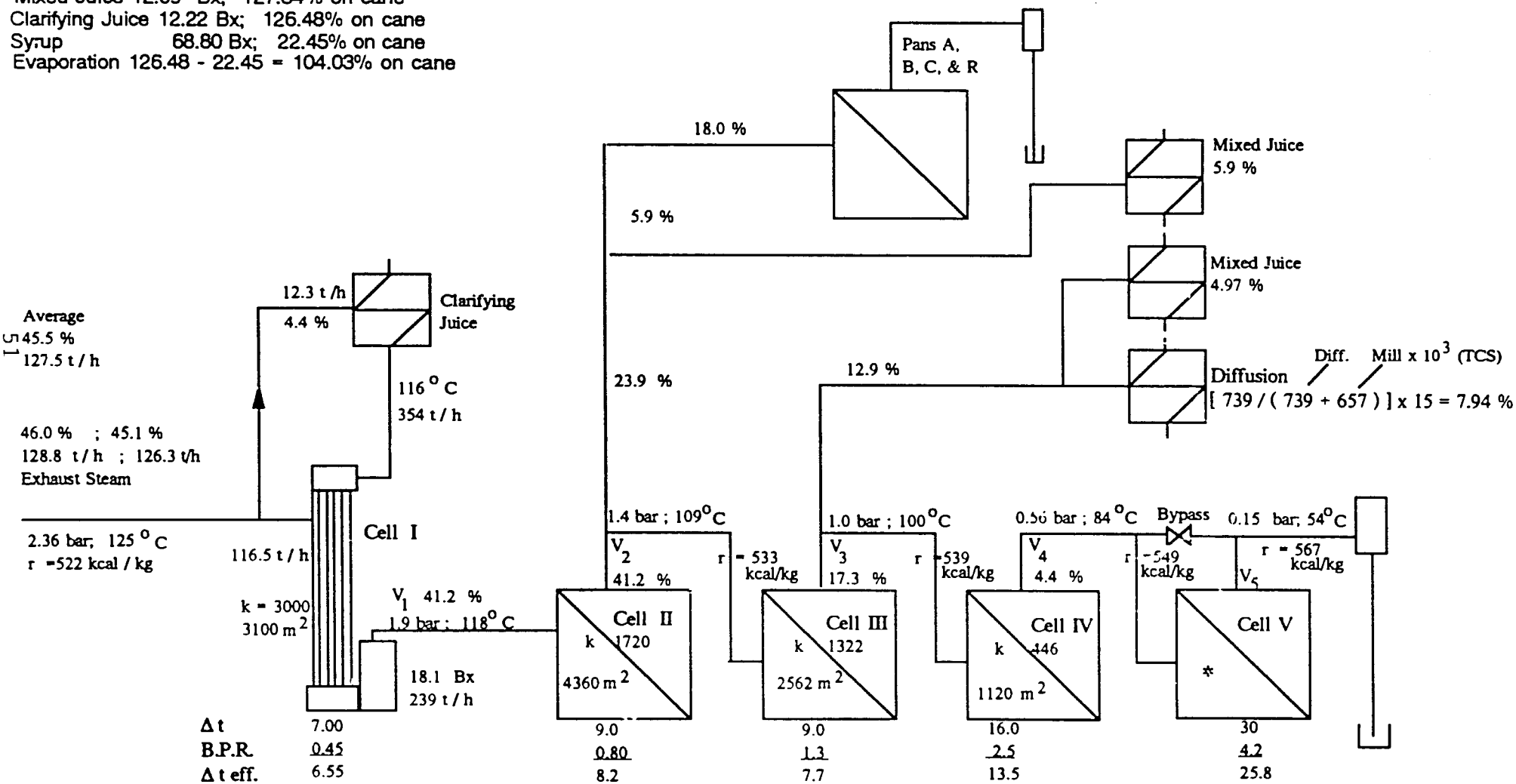

Calculations and Explanatory Notes for DIAGRAM 2-6

- Evaporator Cell I (Falling Film type)
  Evap. Rate % on cane:
  41.18 % 115.3 t/h

  Heating surface required : $\frac{116.5 \times 10^3 \times 522}{6.55 \times 3000} = 3100\ m^2$
  2 Units ≈ 1600 m^2 Heat Surface
  6' - 7'ø ; 10m tubes

Cell I	Falling Film	Q + 23.9 + 12.9	104.03 %
Cell II	kestner	Q + 23.9 + 12.9	291 t/h
Cell III	Roberts	Q + 12.9	
Cell IV	Roberts	Q	
Cell V	Roberts	(Q) * --	

  * Cell V used for Bx-Control Syrup

- 4 x Q + 86.5 = 104.03
  Q_4 = 4.38 ; incl. $(Q)_5$ (3.51)
  Steam to Evaporator System

4.38 + 23.9 + 12.9 =	41.2	(40.3)
Clarifying Juice Heater	4.4	4.4
Clarif. Juice Heat Cell I	0.4	0.4
Σ % on cane	46.0	(45.1)
t/h	128.8	(126.3)
Average	45.55	(127.5)

TABLE 2-7

Ubombo Ranches, Ltd.
Evaporator System Modification
Implementation of Falling Film Evaporator Cell #1

	Steam to Evaporator % on cane/ (t/h)	Live Steam % on cane/ (t/h)	Bagasse Surplus % on cane/ (t/h)	Net Heat Surplus kcal x 10^6	MW in Condensing Service (W.R. 4.25)	MWh per Season (231 days)
Actual Condition	53.5 / 149.8	59.6 / 166.9	-- / --	-- --	--	
Conditions After Modification	45.5 / 127.4	52.1 / 145.9	3.49 / 9.76	13.71	4.94	27,388

TCH 280; bagasse 29.6% on cane, 82.88 t/h, 1,873 kcal/kg NCV; boiler efficiency .75
Surplus based upon actual steam consumption 59.6%; 166.9 t/h

2.3 Surplus Energy Generation

2.3.1 Alternative 1

Taking the following measures:

	MWh/Season
Use of actual bagasse surplus (231 days) 1.9% on Cane condensing mode	12,196
Evaporator Modification:	
Falling Film Cell	
Live steam saving 7.5% on Cane	
Bagasse saving 3.5% on Cane	
Power generation - condensing mode; (4.25 kg/kWh)	27,338
Surplus energy actually produced in cogeneration	4,300
Total surplus energy available during the full year cycle	43,834
Average power surplus (365 days) -	5.0 MW
Power required for irrigation	41,352 MWh
For Plant off season (.6 x 24 x 30 x 4.3)	1,857 MWh
TOTAL	43,209 MWh

2.3.2 Alternative 2

Taking the following measures:

	MWh/Season
Use of actual Bagasse surplus 1.9% on Cane condensing mode	12,196
Reduction of imbibition to 300% on fiber Bagasse surplus 2.49% on Cane Condensing mode	19,557
Evaporator Modification:	
Falling Film Cell #1	
Bagasse saving 3.5% on Cane	
Power generation - condensing mode; (4.25 kg/kWh)	27,388
Surplus energy actually produced in cogeneration	4,300
Total surplus energy available during the full year cycle	63,441
Average power surplus (365 days) - 7.2 MW	

2.4 Generation Profile

The average and maximum load conditions are shown in the Diagram 2-8. The power usage for the mill is fairly constant. Since the fiber load changes during the season, there is also a certain change in the power requirement for the mill. The change is, however, not considered in this profile.

The load factor for the proposed 8.0 MW turbo-generator would be approximately 50%, assuming that this unit would be primarily used instead of the existing turbines, in particular the smaller and inefficient ones.

2.5 Steam Generation Potential

Based upon alternative 1, the live steam requirement during the crushing season can be reduced by 7.5% to 52.1% on cane or 146 t/h. The boiler capacity (MCR) is 190 t/h. The difference of 44 t/h live steam would allow the generation of (New 8.0 MW turbogenerator) 44/4.25 = 10.3 exceeding the maximum power demand for irrigation by 17%.

During the off season power can be generated in condensing mode only. However, passout steam must be used for condensate and feed water heating to improve the Carnot cycle.

The live steam requirement would be:
For maximum power demand:

$$9.4 \times 4.25 = \underline{40 \text{ t/h}}$$

For average power demand:

$$5.3 \times 4.25 = \underline{22.5 \text{ t/h}}$$

The bagasse demand would be:
For average load:

$$22.5/2.15 = \underline{10.5 \text{ t/h}}$$

DIAGRAM 2-8
Ubombo Ranches, Ltd.
Generation Profile

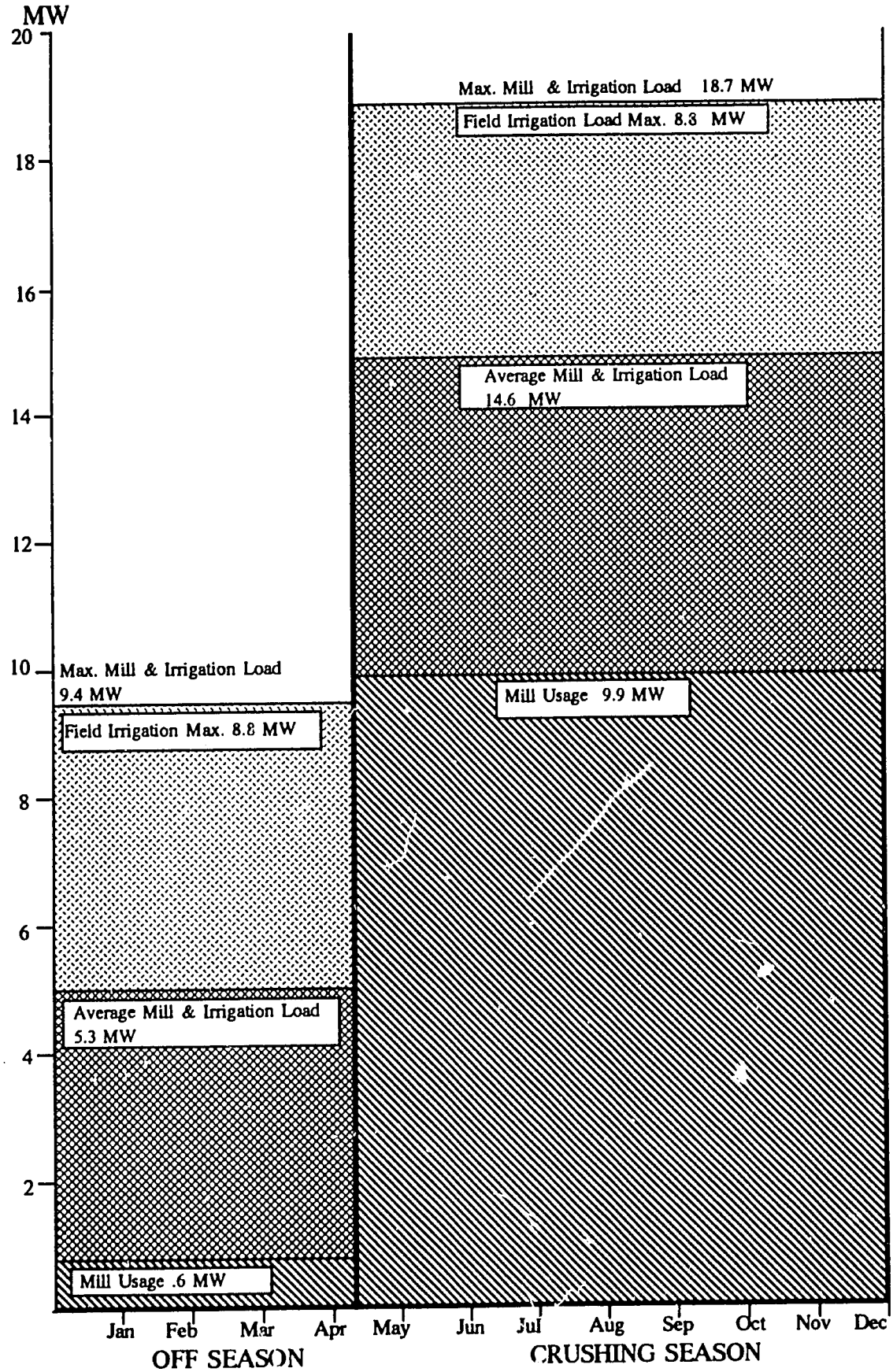

3.0 SIMUNYE SUGAR ESTATE

3.1.1 Existing Energy System Specifications

Steam Boilers
Steam condition 31 bar; 400°C

3 John Thompson boilers - 55 t/h each
with chain grate stoker

Power Station
2 Parson Peebles back pressure
turbo-generator 3.5 MW each (W.R. 9.0 kg/kWh)

1 passout/condensing
turbo-generators 10.0 MW (W.R. 9.0kg/kWh)

Total installed capacity: 17.0 MW

Prime Movers
Shredder
1 Turbine 1.5 MW

Mills
6 Turbines .9 MW each

Feedwater pump
1 Turbine .28 MW
Total installed: 7.18 MW

3.1.2 Steam and Power Generation

Bagasse Gross Energy Potential (Flow Diagram 3-1)

Bagasse % on Cane 25.26; Cane 290 t/h; 220 days.
Humidity 49.85%; NCV 1,870 kcal/kg
290,000 x .2526 x 1,870 137 x 10^6 kcal/h

Steam conditions - 31 bar; 410°C; Boiler efficiency 63.5%;
Feedwater temperature 104°C.

Steam rate obtainable from bagasse:
137 x 10^6 x .635/(775 - 104) x 1,000 129.6 t/h

DIAGRAM 3-1
Simunye Sugar Estate
Flow Diagram

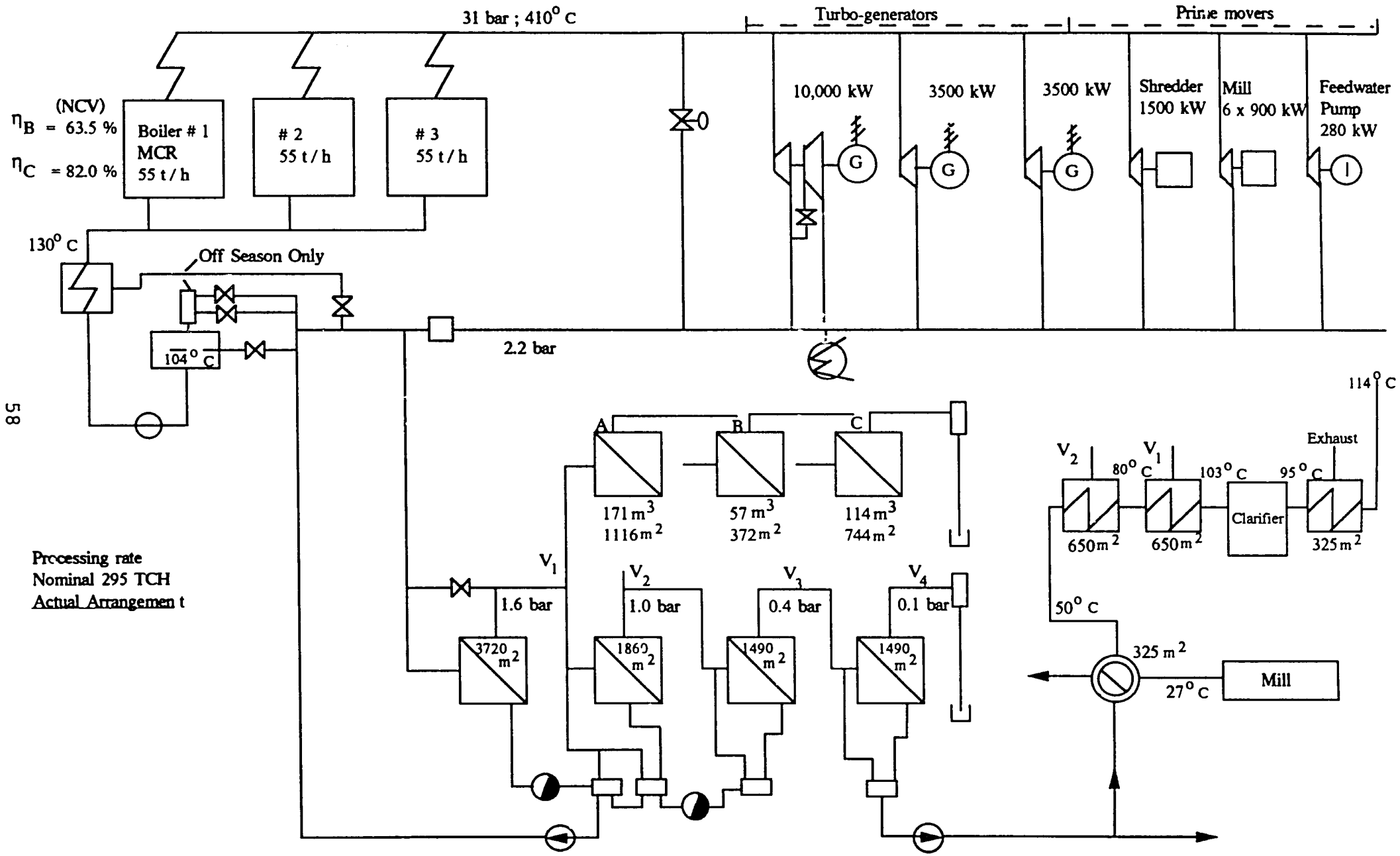

Steam required for plant: 49.66% on Cane 144 t/h

Deficit 14.4 t/h

Coal used to make up deficit:

Swaziland Coal NCV 6,937 kcal/kg.
Boilers efficiency 82%

$$\frac{14.4 \times (775 - 104)}{.82 \times 6937} = 1.7 \text{ t/h}; \; 1.7 \times 1{,}000/290 = 5.86 \text{ t/1,000tC}$$

Power generation for Plant:

Turbo-generators	6,000 kW
Prime movers	4,600 kW
Total	10,600 kW

Bypass live steam < 2 t/h

3.1.3 Energy Requirement for Irrigation

The requirements have been estimated based upon information from Ubombo data on cane crushed per year.

1,314,098 x 41,352/1,396,954 = 38,900 MWh/year

This energy is supplied nearly exclusively by SEB. The average power demand over the full year is 4.44 MW and peak loads up to 8 MW during the winter (crushing season) and 11 MW in summer (off season) will occur.

At present, the energy self-sufficiency of the industrial complex is not assured and requires the use of coal, particularly during the first half of the crushing season.

A bagasse surplus will occur at the end of the season (Table 3-2). This bagasse surplus, supplemented with coal, provides the off season energy requirement for the mill and village (estimated to be .6 MW or 1,857 MWh over a time period of 129 days).

The actual SEB purchases are approximately 40,757 MWh/year which includes power for irrigation as well as supplementary power for the operation of the factory.

Table 3-2

SIMUNYE Sugar Estate
(Fiber rates, averages 1982 - 1985)

Month	Fiber % Cane	Fiber Milled[2] t/h	Fiber Milled[2] % on Cane	Bagasse t/h
May	11.6	33.71	24.44	71.04
June	11.75	34.15	24.76	71.97
July	11.9	34.58	25.07	72.87
August	12.28	35.69	25.87	75.21
September	12.72	37.17	26.95	78.33
October	13.60	39.52	28.65	83.28
November	14.80	43.01	31.18	90.64
December	16.32	47.43	34.39	99.96

[2]Fiber in bagasse 47.45%; Cane 290.65 t/h.

3.2 Modifications For Higher Generation Potential

The most viable improvements for Simunye can be made in the area of the steam boilers and the prime movers.The recent installation of a 10 MW passout/condensing turbo-generator provides the basis for a substantial increase in energy output.

3.2.1 Imbibition Rate Reduction

The cogeneration system is balanced out. Therefore, there is no bypass of live steam to the evaporator system. In fact, there is often surplus exhaust steam which can be properly used only in the new condensing turbine.

The imbibition rate used is 360% on fiber. Therefore, the steam requirement of the evaporator system is substantially lower than in the other units. Nevertheless, a reduction to 300% would yield a steam saving of 1.1 % on cane or .50% bagasse on cane. (See comparison in Diagrams 3-3 and 3-4 and Flow Diagram 3-5.)

The compound imbibition system of the mill train is highly overloaded, resulting in a constant flooding of the top rollers and an undesirable bypass flow of juices to the mills proper.

The use of perforated pressure feed rolls is recommended to overcome this problem and to make better use of the imbibition juices throughout the train.

3.2.2 Improvement of Boiler Efficiency

The three Thompson boilers are performing well when fueled with coal. However, the capability to burn bagasse is severely impaired (boiler efficiency, 63.5%). The design of the combustion area is not adequate for bagasse and substantial changes would be required to overcome this problem, only to jeopardize the operation with coal.

For this reason, the installation of a new boiler unit with the following specifications is recommended:

Capacity (MCR):	120 t/h
Normal:	100 t/h
Fuel, bagasse 100%:	No coal

Steam conditions 32 bar: 415°C

Feedwater temperature: 130°C

Automatic travel or step grate

Boiler efficiency: 80%

Fuel saving by using a highly efficient boiler unit:

Existing boiler units basis 100 t/h.

Bagasse consumption:

$$\frac{100 \times (775 - 130)}{.635 \times 1{,}870} = 54.3 \text{ t/h}$$

New boiler unit - 100 t/h:

$$\frac{100 \times (775 - 130)}{.80 \times 1870} = 43.11 \text{ t/h}$$

Bagasse surplus: 11.19 t/h
or 3.88% on cane

The implementation of a new bagasse boiler is the most important step to improve the existing energy system. This, in combination with the coal fired boilers in place, can be considered a viable solution to achieve energy self-sufficiency.

Simunye Sugar Estate
Existing Evaporator System
Heat Balance; Imbibition Rate 360% on fiber

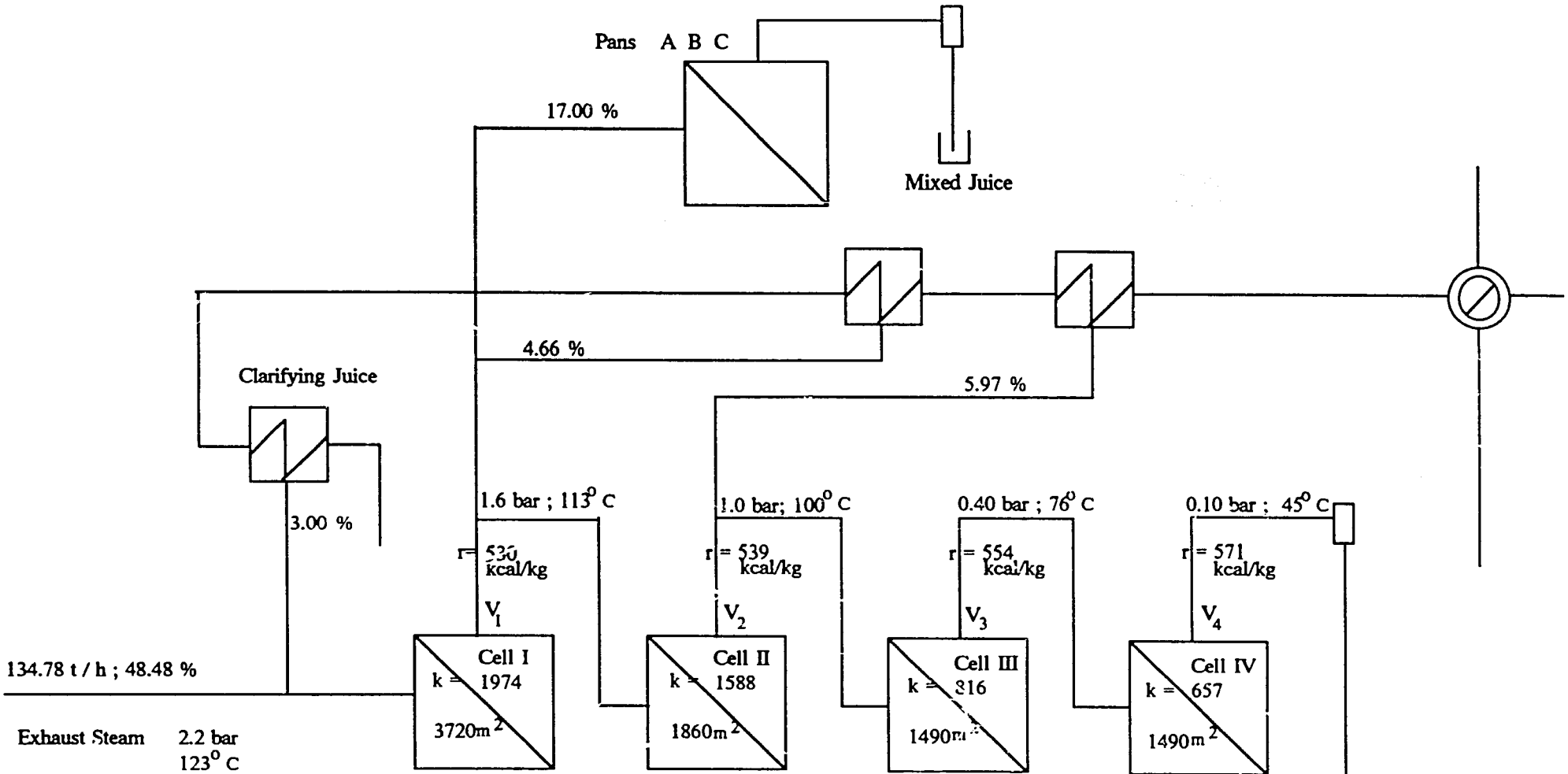

Δ t	°C	10.0	13.0	24.0	31.0
B.P.R.	"	0.9	1.5	3.0	4.2
Δ t effect.	"	9.1	11.5	21.0	26.8

Cell I Roberts Q + 4.66 + 17.0 + 5.97
Cell II " Q + 5.97
Cell III " Q
Cell IV " Q
} 96.98

4 x Q + 33.6 = 96.98
Q = 63.38 / 4
Q = 15.85

Steam to Cell I 15.85 + 4.66 + 17.0 + 5.97 = 43.48
Clarified Juice Heater 3.00
Total % on cane 46.48
t / h 134.78

DIAGRAM 3-4
Simunye Sugar Estate
Existing Evaporator System
Heat Balance; Imbibition Rate 300% on fiber

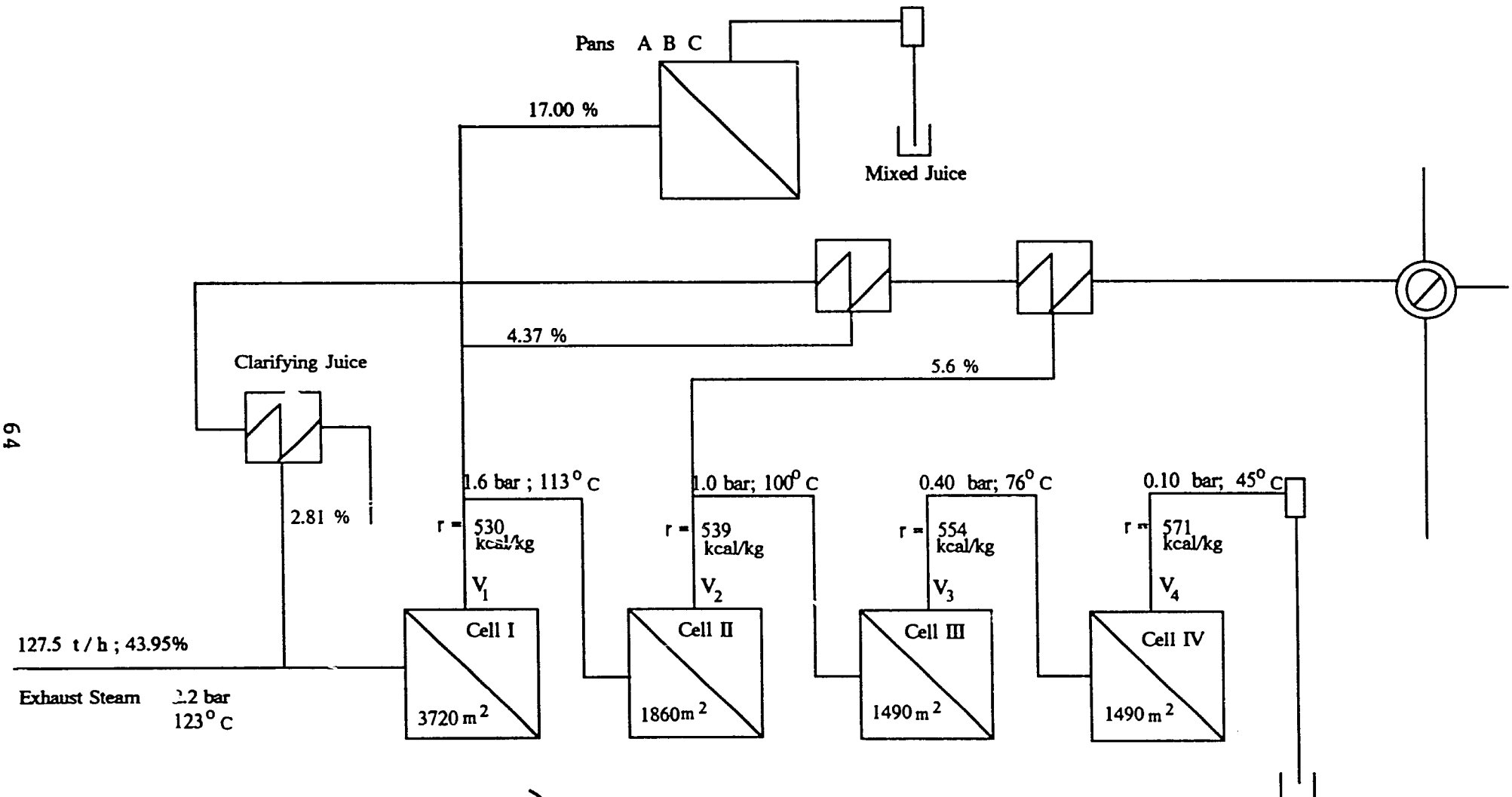

Cell I Roberts Q + 4.37 + 17.0 + 5.6
Cell II " Q + 5.6
Cell III " Q
Cell IV " Q
} 89.27

4 x Q + 32.6 = 89.27
Q = 14.17
Steam to Cell I 14.17 + 4.37 + 17.0 + 5.6= 41.14
Clarified Juice Heater 2.81
Total % on cane 43.95
t / h 127.5

Simunye Sugar Estate
Flow Diagram

Imbibition Rate 300 % on fiber

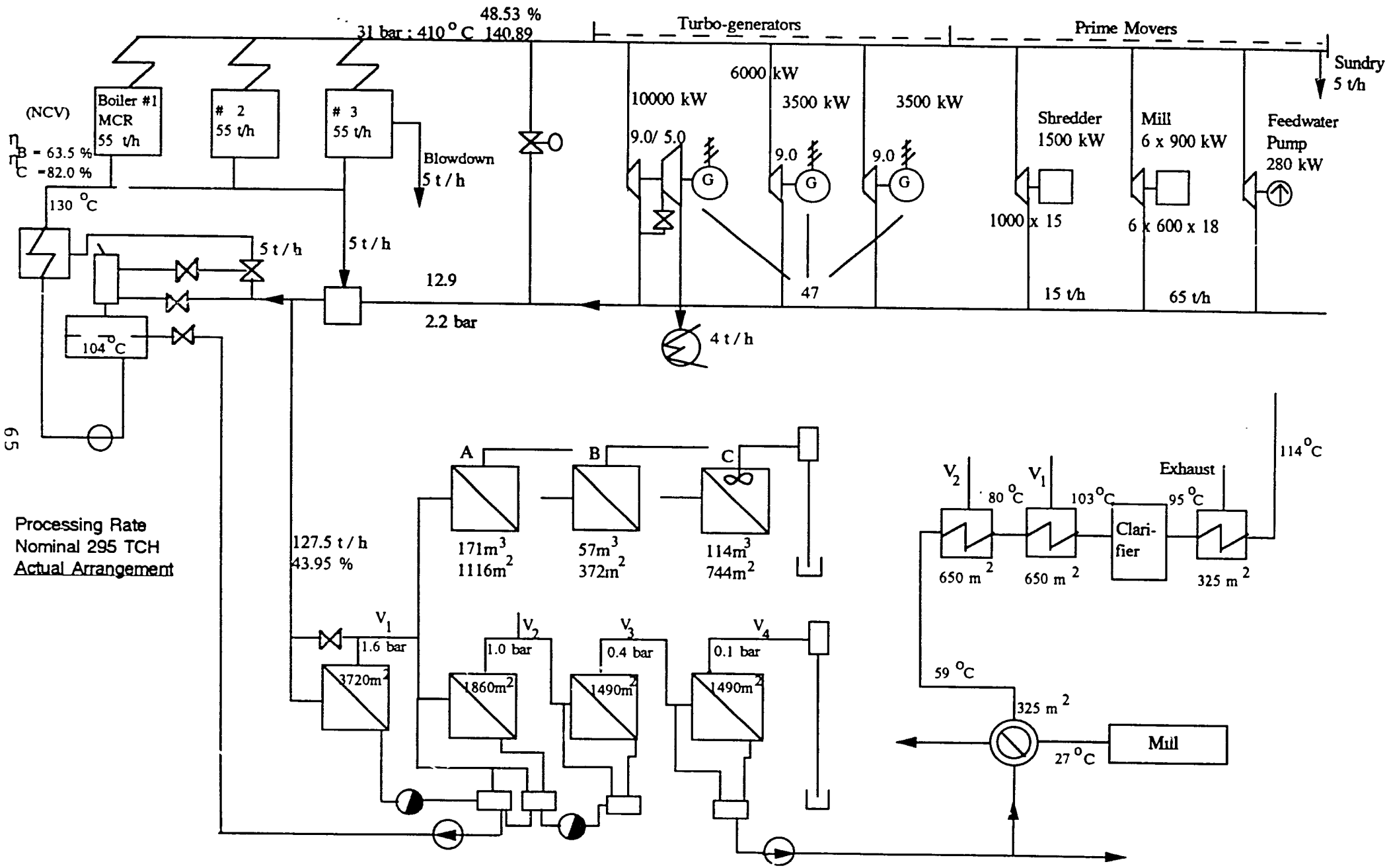

Processing Rate
Nominal 295 TCH
Actual Arrangement

3.2.3 Evaporator Modification

The layout of the related components is well designed. The heating surfaces are dimensioned adequately. There are, however, not enough heating surfaces in the vacuum pans to allow a reduction of the heating steam pressure. Therefore, no significant changes for vapor bleedings can be recommended.

3.2.4 Turbo-generators and Prime Movers

The implementation of a 10 MW passout/condensing turbo-generator is already providing the basis for the most substantial improvement of the power system. However, this unit alone cannot generate the maximum peak load of 11 MW, which may occur in the off season. Nevertheless, fluctuations in the irrigation load can be reduced or eliminated completely.

The prime movers are without automatic nozzle group regulations and have high water rates.

This is particularly notable for the mill drives (W.R. 18.0 kg/kWh) where the turbine speeds are too low for good performance. A change of the respective gear ratio to the mills is recommended.

Any live steam saving made in the prime movers can be routed to the turbo-generator to produce additional energy due to their lower water rates. This will provide a better balance of the cogeneration system and a major energy potential in condensing mode.

3.3 Surplus Energy Generation

3.3.1 Alternative 1

- Use of a new efficient boiler to burn bagasse
- Use of coal to reach self-sufficiency

a) Bagasse boiler assumptions:

100 t/h continuous load
boiler efficiency of 80%

b) Bagasse surplus assumptions:

3.88% on cane
11.19 t/h

c) Energy potential (condensing service):

$$\frac{11.19 \times 1{,}870 \times .80 \times 24 \times 220}{(775 - 130) \times 5.0} = 27{,}155 \text{ MWh}$$

d) Current deficit

$$\frac{1.1 \times 6{,}937 \times .82 \times 24 \times 220}{(775 - 130) \times 5.0} = <10{,}244 \text{ MWh}>$$

e) Net Energy surplus = 16,911 MWh
c - d

f) Energy required for irrigation = 38,900 MWh

g) Off season energy requirement for plant = 1,857 MWh

h) Total energy to be supplied by coal (e-f-g) = 23,846 MWh

i) Amount of coal used

$$\frac{23{,}846 \times 5.0 \times (775 - 130)}{.82 \times 6{,}937} = 13{,}519 \text{ t/year}$$

3.3.2 Alternative 2

- Use of new efficient boiler to burn bagasse
- Reduction of imbibition rate from 360% to 300% on fiber
- Use of coal to reach self-sufficiency

a) Energy potential from new boiler = 27,155 MWh

b) Energy potential from imbibition rate change (condensing service)

Bagasse surplus .5% on cane - 1.45 t/h

Generation

$$\frac{1.45 \times 1870 \times .80 \times 24 \times 220}{(775 - 130) \times 5.0} = 3{,}551 \text{ MWh}$$

c) Current deficit

$$\frac{1.1 \times 6937 \times .82 \times 24 \times 220}{(775 - 130) \times 5.0} = <10{,}244 \text{ MWh}>$$

d) Net Energy surplus: = 15,816 MWh
a + b - c

e) Energy required for irrigation = 38,900 MWh

f) Off season energy requirement for plant = 1,857 MWh

g) Total energy to be supplied by coal (e + f - d) = 20,462 MWh

h) Amount of coal used

$$\frac{20{,}462 \times 5.0 \times (775 - 130)}{.82 \times 6937} = 11{,}601 \text{ t/year}$$

3.4 Steam Generation Potential

3.4.1 Alternative 1

Average boiler efficiency = 75.5 %

Steam generation by using all bagasse:

$$\frac{137 \times 10^6 \times .755}{(775 - 130) \times 1{,}000} = 160.4 \text{ t/h}$$

Steam required for Plant = 144.0 t/h

Use of Steam for surplus power:

Condensing service; W.R. 5.0 kg/kWh = 16.4 t/h

Power obtainable:

16.4 / 5.0 = 3.28 MW

or generation of:

3.28 x 24 x 220 = 17,318 MWh

The lowest fiber rates recorded are 11.6% on cane resulting in 24.44% bagasse on cane. The gross heat value available would be 132 x 10^6 kcal/h which can be converted in 155.5 t/h live steam.

Self-sufficiency in the factory and independence from coal can be maintained during crushing season.

3.4.2 Alternative 2

Use of coal:

Steam generation based upon average load (365 days):

$$\frac{11{,}601 \times 6{,}937 \times .82}{24 \times 365 \times (775 - 130)} = 11.68 \text{ t/h}$$

Use of all bagasse, new and existing boilers
(average boiler efficiency 76%)

$$\frac{137 \times 10^6 \times .76}{(775 - 130) \times 1{,}000} = 161.4 \text{ t/h}$$

Steam required for plant: 140.90 t/h

Reduction of imbibition rate from 360% to 300%

Use of Steam for Surplus power: 20.5 t/h

Surplus energy obtainable from mill:
20.1 x 24 x 220/5.0 21,648 MWh

Surplus energy obtained with coal:
11.68 x 24 x 365/5.0 20,463 MWh
42,111 MWh

3.5 Generation Profile

The average and maximum load conditions are shown in Diagram 3-6.

The power usage for the mill is rather constant at 10.6 MW. The maximum installed capacity turbo-generator and prime movers combined provide 24.2 MW. The real generation potential is

obtained by deducting the capacity of the prime movers (7.2 MW) and, hence, obtaining a usable generating potential of 17.0 MW. This is 1.6 MW short of the maximum irrigation load and mill power combined. The average irrigation and mill load is 15.0 MW, or 88% of the usable generating capacity. During the off season the peak load can reach 11.5 MW. The passout/condensing turbine is limited to 10 MW. The average load is 5.0 MW or 50 percent.

The peak load, however, could be covered with one of the Backpressure turbines using its exhaust steam, at least in part, for Feedwater heating. This would introduce the possibility for improving the steam cycle. There is also a condenser in place to absorb exhaust steam when necessary.

DIAGRAM 3-6
Simunye Sugar Estate
Generation Profile

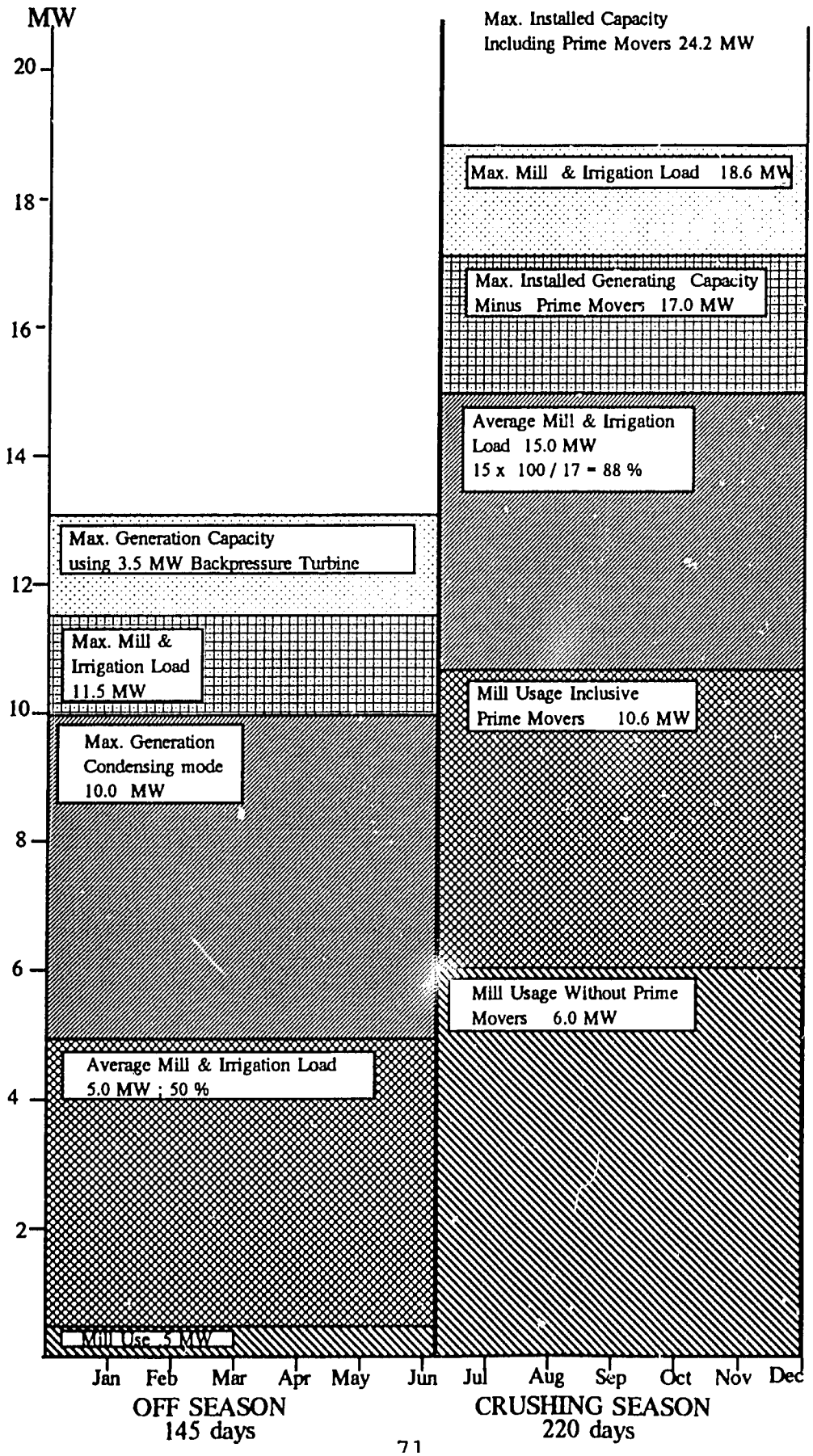

4.0 MHLUME SUGAR CO.

4.1.1 Existing Energy System Specification

Steam Boilers:

5 C.E. boilers
22 t/h each
Bagasse/Coal with stoker 32.7 bar; 350°C
(design conditions)
Operating at 24 bar; 275°C

1 John Thompson, bagasse/coal
68 t/h
moving grate stoker 32.7 bar;
(design conditions)
operating at 24 bar;

Average steam conditions: 24 bar; 340°C

Power Station:

1 Metro Vickers back pressure turbo-generator	1.5 MW (W.R. 13.0 kg/kWh)
1 Allen passout/condensing turbo-generator	2.0 MW (W.R. 12.94/6.5 kg/kWh)
1 Allen/Parsons Peebles back pressure turbo-generator	3.0 MW (W.R. 13.0 kg/kWh)
1 Diesel (standby unit)	.6 MW

Prime Movers:

Back pressure turbines mill:

Knife I	.49 MW
Knife II	.75 MW
Shredder	.75 MW
Mills	6 x .49 MW
	4.93

Back pressure turbines diffusion:

Knife I	.45 MW
Knife II	.75 MW
Shredder	.75 MW
Mills	2 x .45 MW
	2.85

Feedwater pumps:	.38 MW
	.15 MW
	.53

Average water rates 15kg/kWh 8.31

4.1.2 Steam and Power Generation

Bagasse gross energy potential (Flow Diagram 4-1):
Bagasse % on Cane 28.43; 303 t/h; 174 days
Humidity 49.36; NCV 1,910 kcal/kg
303,000 x .2843 x 1910 164 x 10^6 kcal/h

Steam conditions 24 bar; 340°C; Boiler efficiency 65%
Feedwater temperature 108°C; i" 741 kcal/kg

Steam rate obtainable from bagasse:
164 x 10°C x .65 (741 - 108) x 1,000 / 168.9 t/h
55.76% on Cane

Steam required for plant: 173.0 t/h
57.1 % on Cane

Deficit 4.1 t/h

Coal used to make up deficit:
Swaziland coal NCV 6,937 kcal/kg

Steam/coal ratio: $\frac{6{,}937 \times .60}{(741 - 108)}$ = 6.58t/t

Coal burned per hour: 4.1/6.58 = .62 t
or 2.05 t/1,000 tC

Power generation for plant:

Turbo-generators	4,200 kW
Prime movers	5,300 kW
Total	9,500 kW; 1.31 kW/tCD

Bypass live steam: ≥ 26 t/h

4.1.3 Energy Requirement For Irrigation

Mhlume's energy requirements have been estimated based upon total usage and total cane crushed per year.
1,373,337 x 41,352/1,396,954 = 40,652 MWh/year

This energy is supplied exclusively by SEB. The average power demand over the full year is 4.64 MW. The peak loads are assumed to be 8 MW during the winter (crushing season) and 11 MW in the summer (off season).

At present, the energy self-sufficiency of the industrial complex is not assured; the industry requires the use of coal as supplemental fuel, particularly during the first half of the crushing season.

A bagasse surplus will occur toward the end of the crushing season which is used to offset, in part, the bagasse deficit which accrued during the final half of the season. (Table 4-2)

4.2 Modifications for Higher Generation Potential

The high imbibition rate (438%) alone carries a process steam demand of 53.8%. The reduction of this amount is a basic requirement for a substantial gain in surplus energy.

The live steam bypass of 29 t/h to the turbo-generators and prime movers has a cogeneration potential of 29/13 = 2.2 MW. This power source, however, is not reliable and therefore its practical use is very limited.

The boiler efficiency is poor (65%) when using bagasse.

4.2.1 Imbibition Rate Reduction

By reducing the imbibition rate to 300% on fiber, 4.5% live steam on cane can be saved. The ratio of bagasse to live steam is presently:

$$1{,}910 \times .65 / (741 - 108) = 1.96$$

The respective saving of bagasse would be then 2.3% on cane.

The live steam demand for the plant would be 160 t/h. The maximum live steam obtainable from bagasse is 169 t/h. The plant, with this measure alone, can operate in the self-sufficient range without using coal (Diagram 4-3). Bypass live steam is reduced to 12 t/h.

4.2.2 Improvements of Boiler Efficiency

The existing boiler units have poor efficiencies using bagasse or coal as fuel.

The C.E. boilers, being small units, are expensive to operate and to maintain.

The steam pressure of 24 bar is too low for surplus power generation. The implementation of a steam boiler with the following specification is recommended:

Capacity (MCR) 100 t/h
Normal 90 t/h
Fuel bagasse 100%; No coal
Steam conditions 62 bar; 480°C
Feedwater temperature 110°C

Automatic grate and ash removal system
Boiler efficiency 80% (based upon NCV of bagasse)

The arrangement is shown in Diagram 4-4.

The final savings by using the more efficient boiler are as follows:

Existing boiler units.
Bagasse consumption: $\frac{90 \times (741 - 108)}{.65 \times 1{,}910} = 45.9$ t/h

New boiler unit.
Bagasse consumption: $\frac{90 \times (805 - 110)}{.80 \times 1{,}910} = 40.9$ t/h

Bagasse saving: 5.0 t/h
or 1.65% on Cane.

The high enthalpy value of the live steam produced with this boiler unit is the basis for an improved energy system.

DIAGRAM 4-1
Mhlume Sugar Co., Ltd.
Flow Diagram

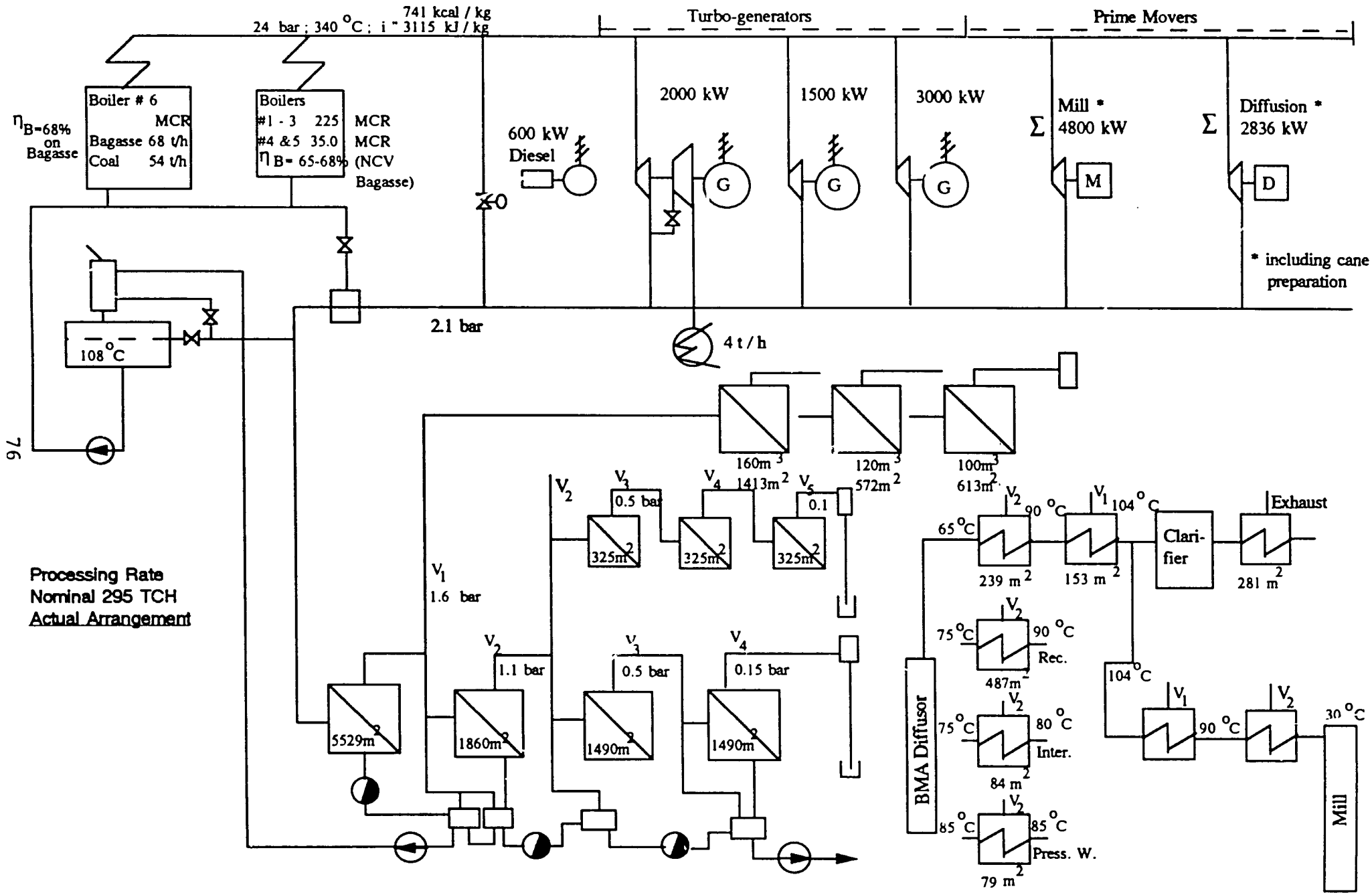

TABLE 4.2

MHLUME Fiber Rates
(averages 1984 -1988)

Month	Fiber % on Cane	Fiber Milled[3] t/h	Bagasse % on Cane	Bagasse t/h
May	13.61	40.35	28.15	83.47
June	14.14	41.93	29.25	86.74
July	13.85	41.07	28.65	84.96
August	14.33	42.49	29.64	87.90
September	14.35	42.57	29.70	88.06
October	14.80	43.90	30.63	90.81
November	15.55	46.11	32.17	95.38
December	14.71	43.61	30.42	90.21

Fiber in bagasse 48.34%; cane 296.48 t/h

[3]Fiber in bagasse 48.34% ; Cane 296.48 t/h

DIAGRAM 4-3
Mhlume Sugar Estate
Existing Evaporator System
Heat Balance; Imbibition Rate 438 % on fiber

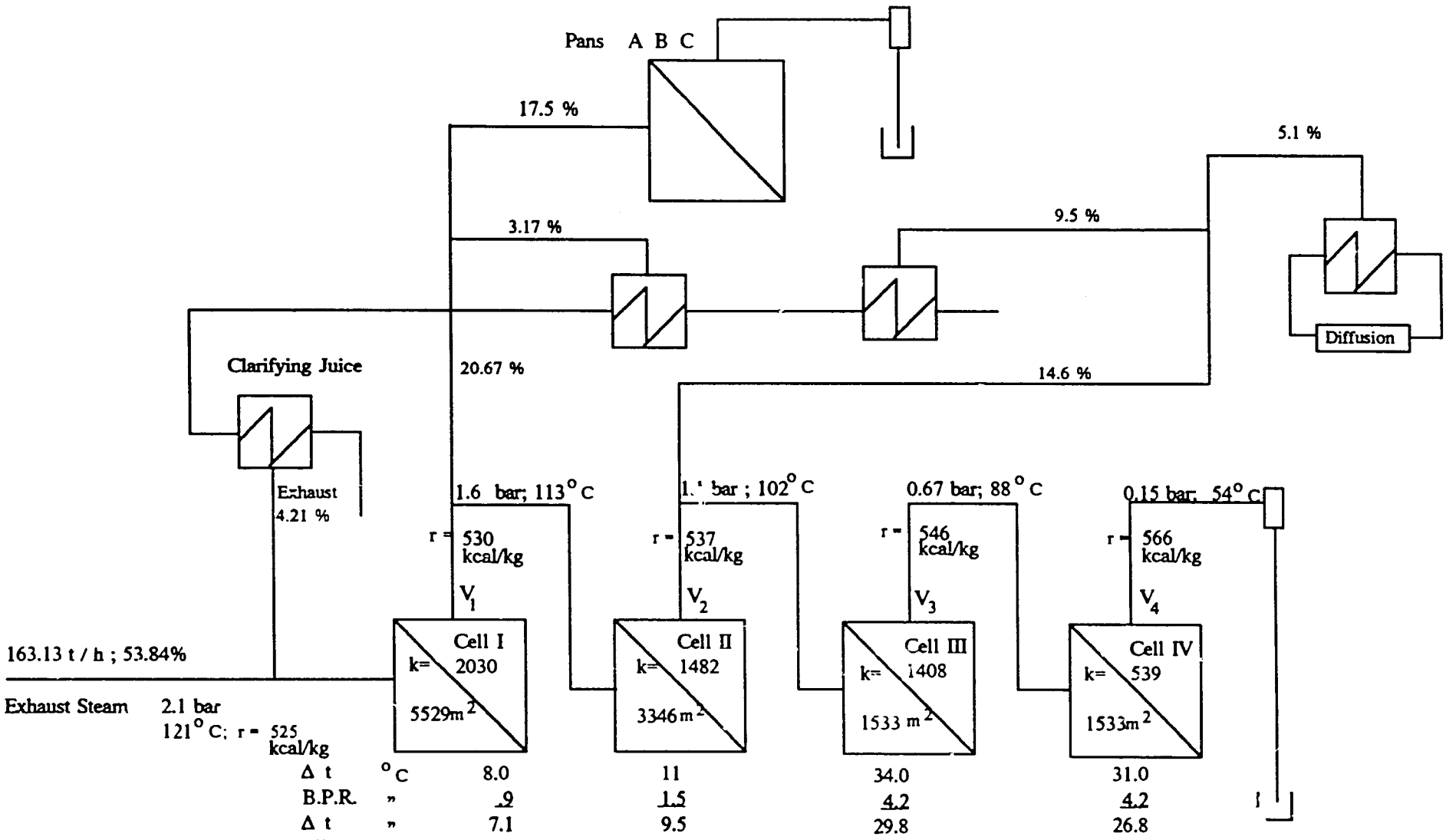

DIAGRAM 4.4

Mhlume Sugar Co., Ltd.

Implementation of HP-Boiler and Turbo-generators

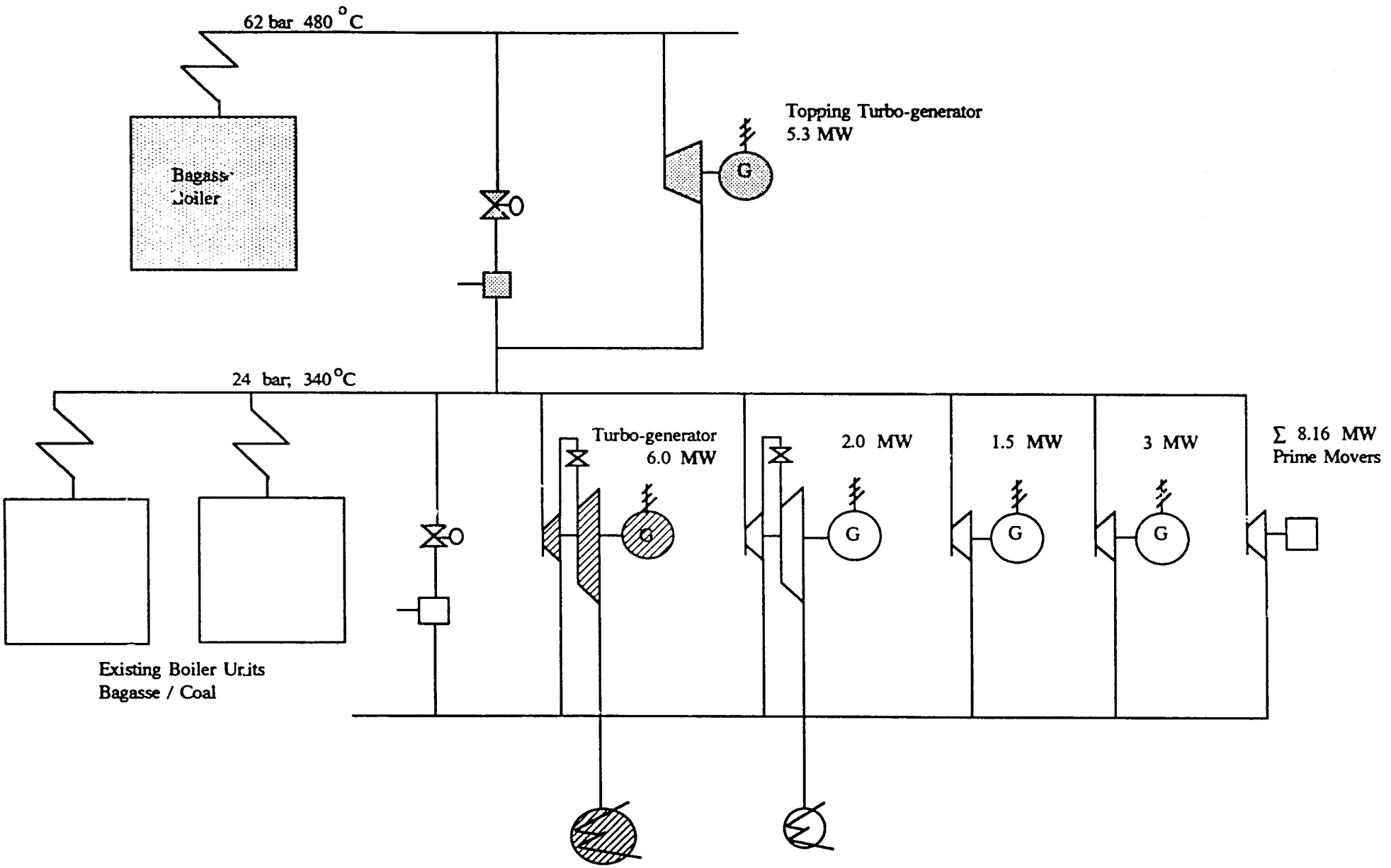

4.2.3 Evaporator Modifications

The technical specifications of the existing prime movers and turbo-generators and the layout of the evaporators system will not allow great changes without major capital investment.

4.2.4 Turbo-generators

The units in place are adequate for present conditions. The capacity of the 2.0 MW passout/condensing turbine is too small to produce a substantial amount of surplus power. The implementation of a combination of turbo-generators is recommended. The thermodynamic situation is shown in Diagram 4-5.

The topping turbine is operating with an isentropic heat drop of 275 kcal/kg, thus producing a power surplus of 4.8 MW with a steam flow of 90 t/h.

The exhaust is flowing into the existing 24 bar live steam system.

A steam pressure reducing station and cooling device must also be located in between the 62 bar and 24 bar system.

The following equipment should be implemented:

- Topping turbo-generator:
  - Steam condition 62 bar; 480°C; Exhaust 25 bar
  - Max Steam flow 100 t/h
  - Water rate or 18.6 with 100% load
  - Generator 5.3 MW; 6.2 MVA; power factor 0.85

Steam Reducing station and steam cooling device

passout/condensing turbo-generator
- Steam conditions 25/32 bar; 340/380°C;

Exhaust 1.5 - 2.5 bar

Capacity Condensing	6.0 MW
Capacity Passout only	3.5 MW
Generator capacity	7.0 MVA; power factor 0.85

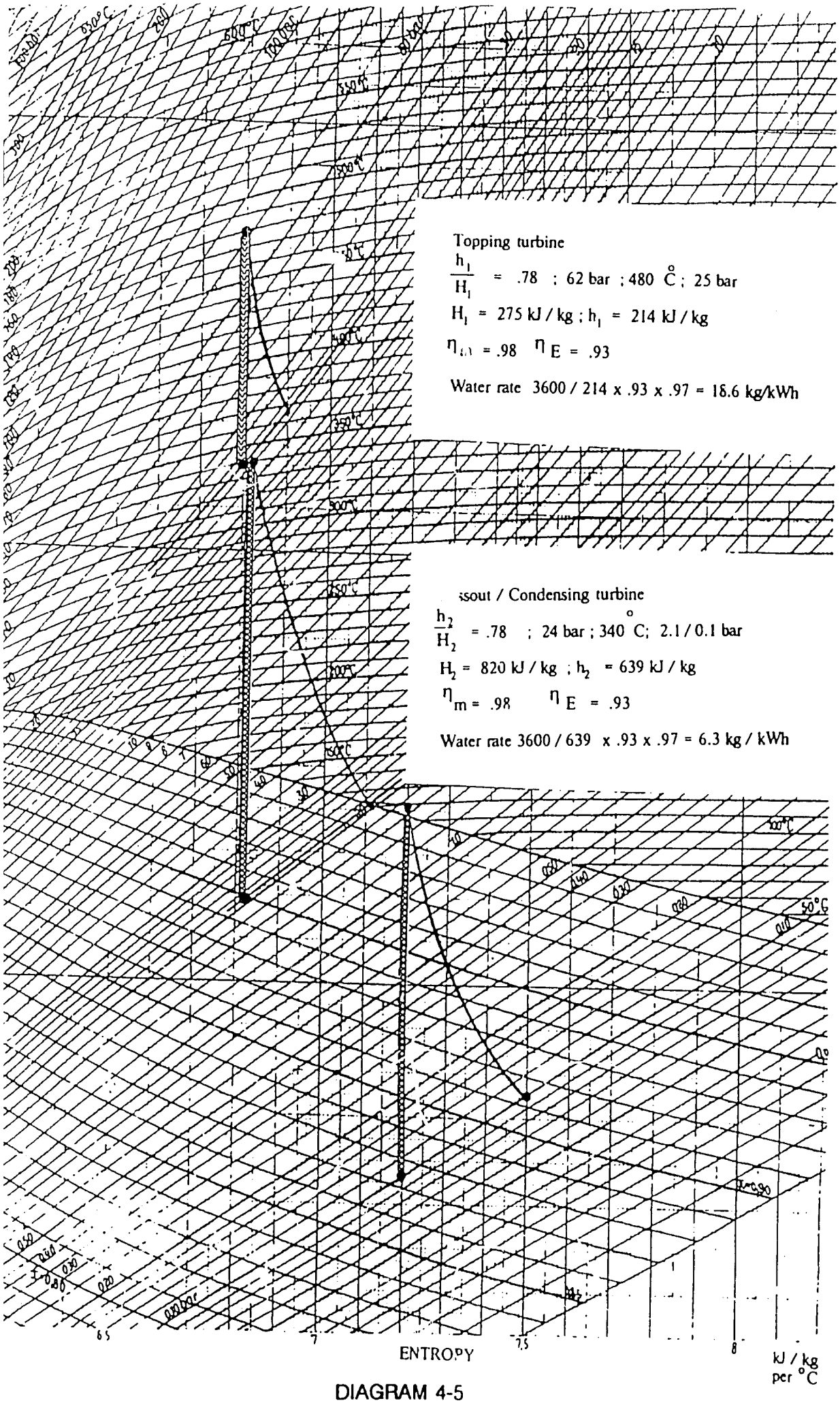

DIAGRAM 4-5
Mhlume Sugar Co., Ltd.
Steam Table

4.3 Surplus Energy Generation

4.3.1 Alternative 1

Use of efficient high pressure steam boiler, a topping turbo-generator and a passout condensing turbine generator.

New boiler 90 t/h, boiler efficiency 80%
Bagasse surplus 1.65% on cane; 5 t/h
Steam generation increase 11.0 t/h
Actual steam generation with bagasse 169 t/h

Future steam generation 180 t/h

Steam consumption of the plant 173 t/h

Surplus of live steam for Surplus-power generation condensing mode 7 t/h

Surplus energy potential
New passout/condensing turbo-generators
24 bar to condenser 20/6.5 1.1 MW

New topping turbo-generator
62 bar to 28 bar 4.8 MW

Total Surplus 5.9 MW*

The maximum energy potential for the crushing season can be computed to: 5.9 x 24 x 174 = 24,638 MWh

Energy required for irrigation 40,652
Off season requirement for plant
(.6 MW); .6 x 24 x 191 2,750
43,402 MWh/year

Energy to be supplied by coal
18,764 MWh/year
Amount of coal required (condensing mode)
water rate = 6.5 kg/kWh

$$18{,}764 \times \frac{6.5}{6.58} = 18{,}536 \text{ t/year}$$

*Not including cogeneration potential of 12 t/h; bypass live steam 12/13 = .9 MW

4.3.2 Alternative 2

Same as alternative 1 plus a change in imbibition rate to 300% on fiber from 360% on fiber.

Future steam generation	=	180 t/h
Steam consumption at 300% imbibition rate	=	160 t/h
Surplus steam	=	20 t/h
Surplus energy potential 20 / 6.5	=	3.1 MW
New topping turbo-generator	=	4.8 MW
Total surplus	=	7.9 MW
Maximum potential during crushing season 7.9 x 24 x 174	=	32,990 MWh
Irrigation and off season power requirements	=	43,402 MWh
Energy to be supplied by coal	=	10,412 MWh
Amount of coal required $10{,}412 \times \frac{6.5}{6.58}$	=	10,285 t/year

4.4 Steam Generation Potential

With the proposed equipment in place, up to 13.3 MW of surplus power can be generated during the crushing season, Diagram 4-6. This, however, is only possible for a limited time period (depending upon the availability of bagasse) but is also only needed to cover peak loads.

Generation is possible with the following equipment:

Topping turbine (new)	5.3 MW
passout/condensing turbine (new)	6.0 MW
passout/condensing turbine (existing)	2.0 MW
Total	13.3 MW

With this, and burning coal (18,536 t/year with Alternative 1 or 10,285 t/year with Alternative 2), self-sufficiency in the agro-industrial complex can be reached.

DIAGRAM 4-6
Mhlume Sugar Co., Ltd.
Surplus Power During Crushing Season

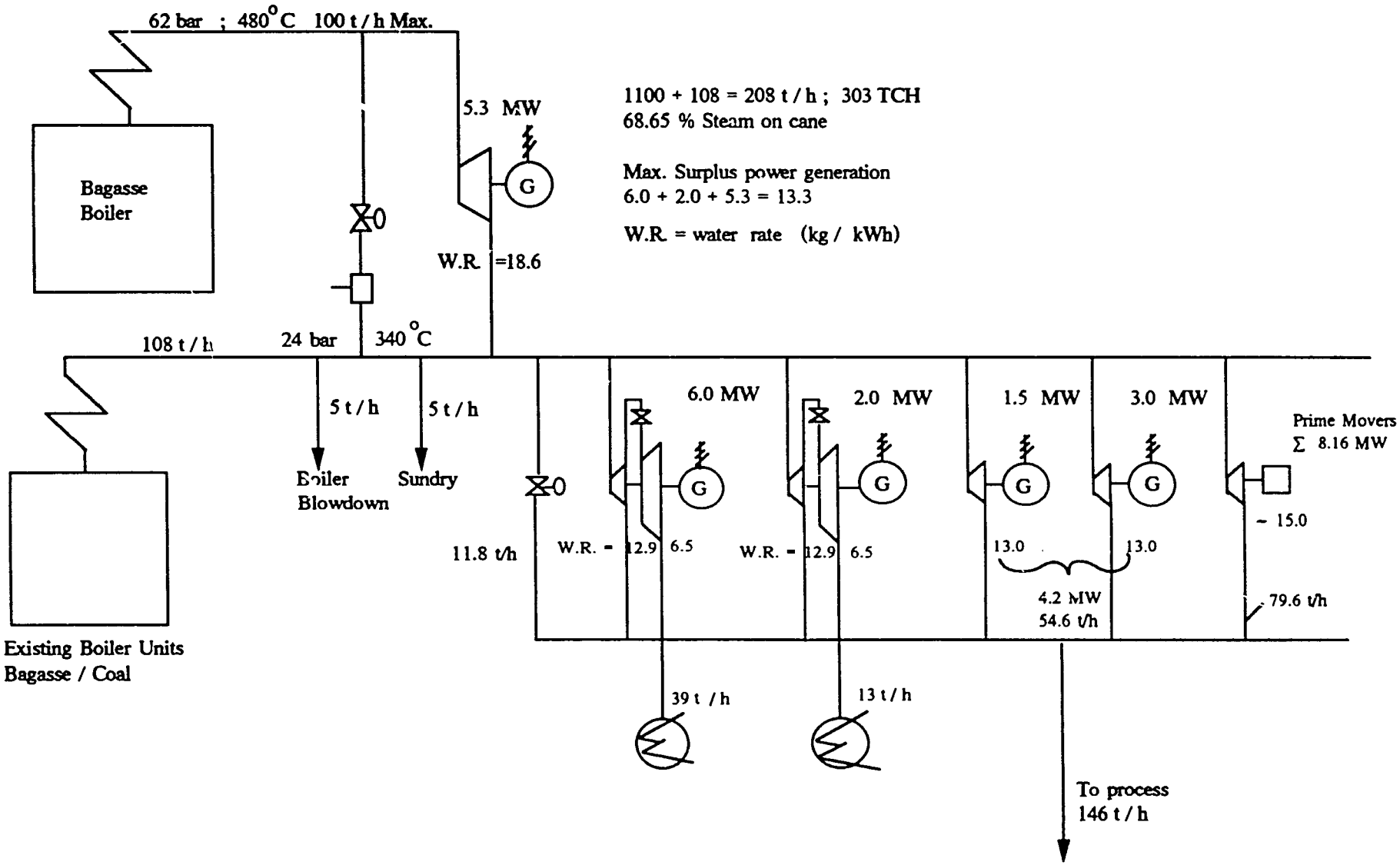

The maximum combined live steam flow during the crushing season, to produce the 13.3 MW surplus power, would be 208 t/h.

During the off season the capacity of the 62 bar boiler and toppingturbo-generator is limited by the live steam taken by the two passout/condensing units as shown in Diagram 4-7.

The maximum power output would be 10.9 MW when the bypass from live steam 62 bar to 24 bar is closed. The required live steam produced by the 62 bar boiler is thereby 52 t/h. This is only 52% of the MCR and will jeopardize the efficiency of the boiler and topping turbine. There may also be some problems for the power system when the pressure in the 24 bar line can not be properly stabilized.

Therefore, during the off season, it is advisable to operate the existing boilers only with surplus bagasse or coal. This would allow a maximum power output of 8 MW by running the existing (2 MW) and proposed (6 MW) passout/condensing turbo-generators. The 24 bar live steam required is 52 t/h.

Some peak loads exceeding 8 MW can be eventually taken by the back pressure turbines (see Diagram 4-7). In this case the fuel cost/kWh will increase by 100% (based on water rates 6.5 condensing and 13.0 back pressure mode).

4.5 Generation Profile

The average and maximum load conditions are shown in the Diagram 4-8.

The power usage for the plant is rather constant. Coal, when used in combination with the proposed equipment changes and operational modes, can generate the required 43,402 MWh/year for irrigation and off season plant operation. The average load would then be 14.1 MW which is 80% of the maximum installed and/or usable capacity during the grinding season and 65% of the same during the off season.

In order to reduce bagasse handling and to burn bagasse in the 62 bar boiler with higher efficiency, most of the bagasse surplus should be used during the grinding season.

Since bagasse cannot be used during the off season, coal should be given preference for fueling the existing 24 bar boiler units.

DIAGRAM 4-7
Mhlume Sugar Co., Ltd.
Surplus Power Generation During Down Season

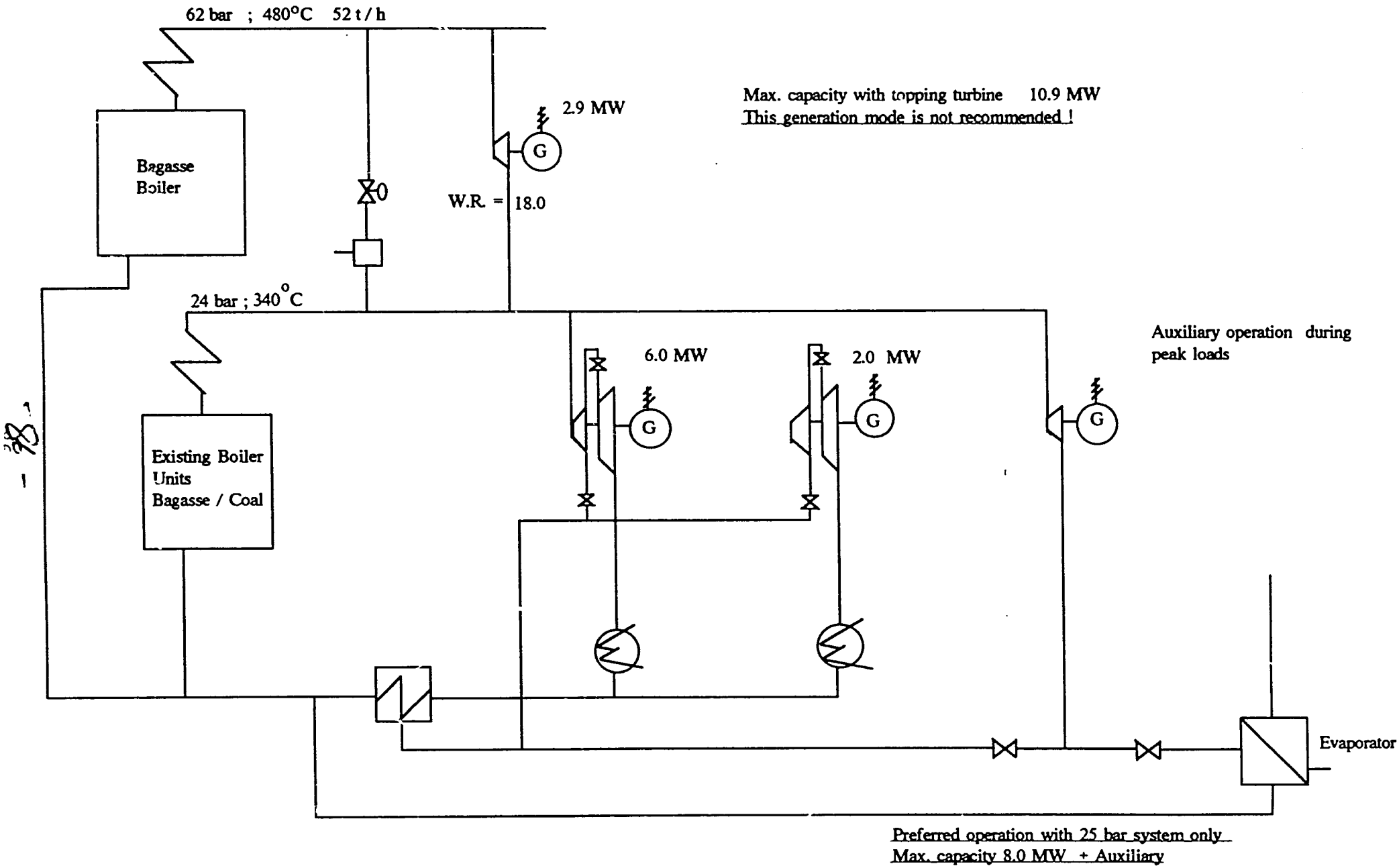

DIAGRAM 4-8
Mhlume Sugar Co.
Generation Profile

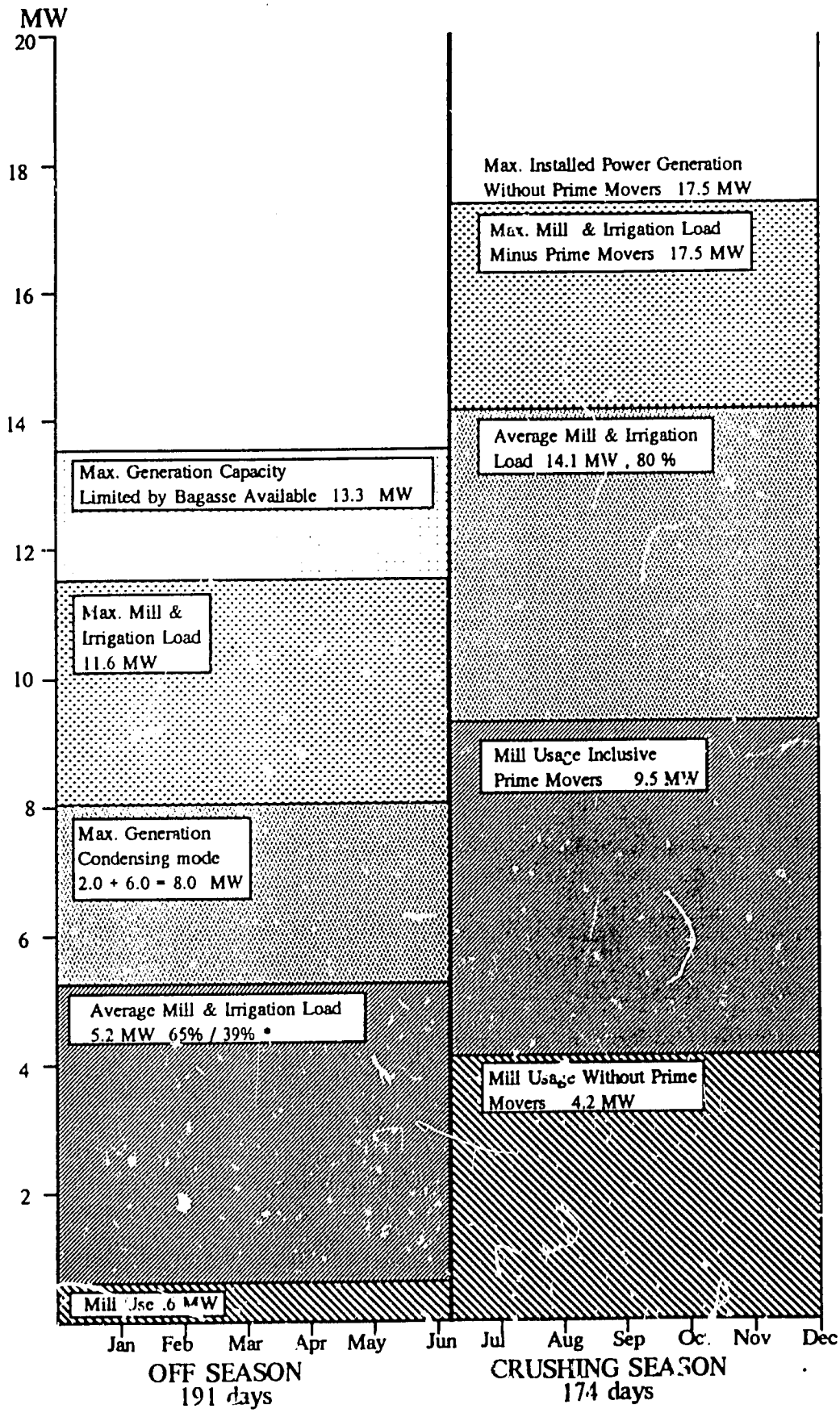

The Office of Energy

The Agency for International Development's Office of Energy plays an increasingly important role in providing innovative approaches to solving the continuing energy crisis in developing countries. Three problems drive the Office's assistance programs: high rates of energy and economic growth accompanied by a lack of energy, especially power in rural areas; severe financial problems, including a lack of investment capital, especially in the electricity sector; and growing energy-related environmental threats, including global climate change, acid rain, and urban air pollution.

To address these problems, the Office of Energy leverages financial resources of multilateral development banks such as The World Bank and the InterAmerican Development Bank, the private sector, and bilateral donors to increase energy efficiency and expand energy supplies, enhance the role of private power, and implement novel approaches through research, adaptation, and innovation. These approaches include improving power sector investment planning ("lease-cost" planning) and encouraging the application of cleaner technologies that use both conventional fossil fuels and renewable energy sources. Promotion of greater private sector participation in the power sector and a wide-ranging training program also help to build the institutional infrastructure necessary to sustain cost-effective, reliable, and environmentally-sound energy systems integral to broad-based economic growth.

Much of the Office's strategic focus has anticipated and supports recently-enacted congressional legislation directing the Office and A.I.D. to undertake a "Global Warming Initiative" to mitigate the increasing contribution of key developing countries to greenhouse gas emissions. This strategy includes expanding least-cost planning activities to incorporate additional countries and environmental concerns, increasing support for feasibility studies in renewable and cleaner fossil energy technologies that focus on site-specific commercial applications, launching a multilateral global energy efficiency initiative, and improving the training of host country nationals and overseas A.I.D. staff in areas of energy that can help to reduce expected global warming and other environmental problems.

To pursue these activities, the Office of Energy implements the following seven projects: (1) The Energy Policy Development and Conservation Project (EPDAC); (2) The Biomass Energy Systems and Technology Project (BEST); (3) The Renewable Energy Applications and Training (REAT); (4) The Private Sector Energy Development Project (PSED); (5) The Energy Training Project (ETP); (6) The Conventional Energy Technical Assistance Project (CETA); and (7) its follow-on Energy Technology Innovation Project (ETIP).

The Office of Energy helps set energy policy direction for the Agency, making its projects available to meet generic needs (such as training), and responding to short-term needs to A.I.D.'s field offices in assisted countries.

Further information regarding the Office of Energy's projects and activities is available in our Program Plan, which can be requested by contacting:

Office of Energy
Bureau for Science and Technology
U.S. Agency for International Development
Room 508, SA-18
Washington, D.C. 20523-1810
Tel: (703) 875-4052