PNABG-270

Report to

U. S. Agency for International Development

ELECTRIC POWER ASSESSMENT

for

THE REPUBLIC OF PANAMA

Job 972F

IQC OTR-1406-I-00-5043-00
Delivery Order No. 6

June 26, 1987

TABLE OF CONTENTS

		Page No.
--	Letter of Transmittal	--
--	Table of Contents	i
--	Executive Summary	1
Section		
I.	GENERAL	
	A. Introduction and Purpose of Assessment	I-1
	B. Authorization and Detailed Statement of Work	I-1
	C. Visit to Panama - Report	I-3
II.	EXISTING REPORTS	
	A. Reports Reviewed	II-1
	B. Approach Used in Summarizing Reports Reviewed	II-3
	C. Technical Information from Prior Reports	
	1. Introduction	II-3
	2. Generating System	II-5
	3. Transmission and Distribution System	II-6
	4. The Central American Interconnected System	II-6
	5. Projection of Future Power Requirements	II-7
	6. IRHE Expansion Program	II-8
	7. Energy Losses	II-9
	8. Load Coverage	II-9
	9. Maintenance	II-9
	D. Financial Information from Prior Reports	
	1. Approved Loans	II-10
	2. Performance of Contract Clauses	II-11

TABLE OF CONTENTS
(Continued)

Section		Page No.
III.	DATA GATHERING IN PANAMA	
	A. Discussions with USAID Mission	III-1
	B. Discussions with IRHE	III-1
	C. Visits to IRHE Generating Stations	III-1
	D. Visit to Costa Rica	III-2
IV.	ASSESSMENT OF SITUATION	
	A. Update of Electricity Supply and Demand	IV-1
	B. Factors Leading Up To The Current Crisis	IV-2
	C. IRHE and Its Organization	IV-2
	D. Power Demand and Supply Balance	
	1. Capacity of Existing Hydroelectric Stations	IV-3
	2. Capacity of Existing Thermal Power Stations	IV-4
	3. Capacity of Imported Power	IV-4
	4. Total Capacity of Existing System	IV-4
	5. Nearterm Power Demand and Supply Forecast	IV-5
	6. Reserve Margin	IV-6
	E. Energy Demand and Supply Balance	
	1. Energy Available from Existing Hydroelectric Stations	IV-8
	2. Energy Available from Existing Thermal Stations	IV-9
	3. Existing Imported Energy Sources	IV-10
	4. Total Energy Available from Existing System	IV-10
	5. Total System Energy Requirements	IV-10
	6. Nearterm Energy Demand and Supply Forecast	IV-11

TABLE OF CONTENTS
(Continued)

Section		Page No.
IV.	ASSESSMENT OF SITUATION (continued)	
F.	Thermal Stations Visited	
	1. Las Minas Generating Station	IV-13
	2. San Francisco Generating Station	IV-13
	3. Panama Gas Turbine Station	IV-14
	4. Capira Diesel Generating Station	IV-14
G.	Hydroelectric Stations Visited	
	1. Bayano Hydroelectric Station	IV-15
	2. Fortuna Hydroelectric Station	IV-15
	3. Los Valles and La Estrella Station	IV-16
H.	IRHE Transmission System	
	1. Background	IV-16
	2. Shortcomings of Existing System	IV-16
	3. Future Development	IV-17
I.	Central American Interconnection	IV-17
J.	System Load Profile & Potential For Peak Shaving	
	1. Panamanian System	IV-17
	2. Costa Rican System	IV-18
	3. Capacity Conservation	IV-18
	4. Peak Shaving	IV-19
K.	Budget Restraints	IV-19
L.	IRHE Expansion Program	IV-20
M.	The Second Stage Fortuna Project	IV-20
N.	New 60 MW Gas Turbine Plant	IV-21
O.	Proposed Future Coal Fired Stations	IV-21
P.	Proposed Future Hydroelectric Stations	IV-22
Q.	Fuel Price Projection	IV-22
R.	Tariff Projection	IV-24
S.	Nearterm Assessment	IV-24
T.	Longterm Assessment	IV-25

TABLE OF CONTENTS
(Continued)

Section		Page No.
U.	RECOMMENDATIONS AND CONCLUSIONS	
1.	Energy Conservation	IV-25
2.	Immediate Funding	IV-25
3.	Fortuna Stage II	IV-26
4.	Gas Turbine Project	IV-26
5.	Transmission System-Short Term	IV-26
6.	Load Shedding	IV-26
7.	Peak Shaving	IV-27
8.	Allocation of Thermal and Hydro Resources	IV-27
9.	Intermediate and Longterm Development-Generation	IV-27
10.	Intermediate and Longterm Development-Transmission	IV-27
11.	Operations	IV-28
12.	Financial	IV-28

EXECUTIVE SUMMARY

A. INTRODUCTION

The investigation and subsequent report was commissioned by USAID to determine the root causes of a shortfall in generating capacity within the IRHE system and IRHE's need during the dry season of 1987 to systematically shed load. The investigation also addressed the probability of a reoccurrence of this shortfall in the future and estimated the possible effectiveness of IRHE future planning and projected increase in generating capacity to alleviate these shortfall problems and further develop the system to meet future demands.

In preparation for arriving at LDP's determination on the imminent shortfall and addressing IRHE's long term planning, LDP was asked to review previous reports on the system, and to dispatch a team to Panama to make a first hand evaluation. A two man LDP team was dispatched to Panama and completed its evaluation June 11, 1987.

B. BACKGROUND

IRHE's available power generation consists of 56% hydroelectric and 32% thermal, the remainder being made up of imported power from Honduras via Costa Rica and from the Canal Zone.

Following a previous investigation into the development of the IRHE generating system over the last ten years, it was concluded that IRHE should adopt a policy of development of hydro resources in an attempt to become less dependent on costly thermal generation. This policy was duly implemented. It does relieve the country from its heavy dependence on imported oil. However, in addition to long lead time, hydroelectric projects require very large investments which must be financed from abroad. Unfortunately in adopting this policy existing thermal generation has been neglected with respect to funding for repair and essential maintenance, and has been considered a low priority item. Furthermore, in developing the hydro resources, the IRHE generating capacity has become dependent on a firm supply of water. In the event of a drought, as occurred in 1986 through May 1987, the firm water supply is diminished. And operating procedures (economic dispatch) for the overall system have heretofor rightly focused on fuel saving rather than using thermal stations to buildup storage of hydro energy during off peak periods for use during periods of peak demand.

B. BACKGROUND (Continued)

In the development of hydroelectric generation, IRHE has experienced construction delays, particularly at their Fortuna Stage I plant. The Fortuna Hydroelectric Station was scheduled to be brought on line during 1982, at which time a number of thermal units were scheduled for overhaul. Due to construction delays the Fortuna project did not come on line until 1984 which meant that a greater reliance was placed on the thermal units and the overhaul and essential maintenance for these units was deferred.

After completion of Fortuna Stage I, it was found necessary to further rely on the now overworked and unreliable thermal units during the dry season, during which time the Fortuna output is limited to approximately 100 MW. The net result of these events is that the thermal units have either failed or are operating at reduced capacity hence causing a reduction in available capacity of 52% of the total installed thermal capacity. This reduction in available thermal capacity and the limitations in the output of Fortuna has led to the present shortfall between peak demand and available generation capacity.

In determining the probability of a reoccurrence in the future of the shortfall, the IRHE projected generation construction program was analyzed in conjunction with an estimated projected increase in electricity demand of 5.9% per annum. If IRHE continues their economic dispatch policy and assuming similar climatic conditions for the future as was experienced during the dry season of 1987, an even greater shortfall will occur during the dry season of 1988. Thereafter, providing that additional thermal generation and Fortuna Stage II are brought on line as now planned the peak demand will be covered until 1994.

C. RECOMMENDATIONS AND CONCLUSIONS

In an effort to alleviate the immediate shortfall of electrical power and to develop at least a 15% reserve margin of generating capacity over the next seven (7) years, the following areas should be examined and where applicable implemented.

1. Energy Conservation. IRHE should actively pursue a policy to encourage its customers to conserve energy by:

   a. Applying a penalty to customers who exceed an upper limit of energy consumption during the dry season, (i.e., an incentive to reduce air conditioning use).

C. RECOMMENDATIONS AND CONCLUSIONS (Continued)

b. Widely advertising the need for energy conservation to encourage consumers to cut back on demand during the daily periods of 12 noon through 4 PM.

c. Modifying the working day in such a way that the 12 noon to 4 PM peak load is reduced.

2. Immediate Funding. Immediate funding should be made available for repair work and the purchase of spare parts, to insure that Las Minas Unit No. 1 and San Francisco's Pielstick Unit No. 1 are brought back on line by January 1988. This may prove to be a difficult schedule if funding is delayed and/or implementation is not undertaken with all possible speed.

Further funding should be made available for repair and purchase of spare parts during 1987-88 to ensure that the Las Minas No. 2 and Pielstick No. 2 are brought back on line by January 1989.

3. Fortuna Stage II. Expedite the construction of the second stage Fortuna Project and have the upgraded plant operational by 1990. If this work is not completed on schedule, demand will very likely outstrip available capacity during 1990 and a crisis similar to that recently experienced will again occur.

4. Gas Turbine Project. IRHE proposes to install two 30 megawatt gas turbine generators for commercial operation during mid-1988. The addition of these units will increase the available capacity of the IRHE system for the 1989 dry season and provide additional flexibility to allow greater hydroelectric storage during off peak periods. If financing can be arranged, this project should proceed with all possible speed.

5. Transmission System - Short Term. Upgrade the interconnected system with Costa Rica by increasing the transformer capacity at La Caja substation in Costa Rica.

This upgrade would increase the imported capacity from Costa Rica from 50 MW to approximately 90 MW (The source of this imported capacity is mainly Honduran hydro generation. The interconnection links the countries of Honduras, Nicaragua, Costa Rica and Panama). The increase in transformer capacity would also benefit the Costa Ricans, since it would reinforce their existing 138 kV system which is presently fully loaded and contains very little reserve transformer capacity. Because

C. RECOMMENDATIONS AND CONCLUSIONS (Continued)

both parties would benefit from the additional transformer capacity, it could and should be jointly funded by IRHE and ICE Costa Rica.

It is recommended that a crash program be initiated to implement the transformer upgrade in Costa Rica and that immediate financing be arranged with USAID or other international lending agency to support the program. Both Panama and Costa Rica should participate in the loan.

6. Load Shedding. Develop a plan and operational procedure for an orderly backup load shedding program. This plan should be developed by IRHE with representatives of government, industry and commerce. The plan should incorporate a procedure to sequence area brownouts (or blackouts) in an equitable manner.

7. Peak Shaving. Develop in conjunction with ICE a procedure for peak shaving of both the IRHE and the ICE systems. This could be accomplished by more fully utilizing the existing interconnection between the two systems and taking advantage of the different characteristics of the load profiles of both systems.

8. Allocation of Thermal and Hydro Resources. Maximize the use of thermal generation during the off peak periods of the dry season to build up water storage for use during peak periods. This will increase fuel costs but would be a constructive plan to avoid (or postpone) load shedding.

9. Intermediate and Longterm Development - Generation.

In considering future intermediate and longterm development of the IRHE generating systems, the following observations are made. At least one new coal fired generating station should be considered for the system, although the major portion of new capacity should be medium size hydroelectric plants (i.e. 100-300 MW) since only 22 percent of the country total feasible potentials in hydro power has been developed so far. The proposed coal plant would be used to meet shortage of hydro capacity during the dry seasons, allow better regulation and energy conservation of the hydroelectric plants and provide the needed reserve margin for the power system at a lesser fuel cost than currently used residual oil. For the two 75 MW coal units tentatively scheduled for operation in 1995, the main source of coal supply presently anticipated will be the Cerrejon coal mine in Columbia. An investigation on this subject concluded that the tentatively scheduled startup for this plant should be brought forward to the last quarter of 1992 or first quarter of 1993 to ensure that the growth demand of the system is satisfied for at least a 3 to 4 year period.

C. RECOMMENDATIONS AND CONCLUSIONS (Continued)

10. Intermediate and Longterm Development - Transmission. The IRHE transmission backbone runs from the west of the country in Chiriqui province to Panama City and from Panama City to Bayano in the east. The transmission line consists of a double circuit operating at a nominal voltage of 230 kV. This backbone is used to transmit power from the hydroelectric generating centers in Chiriqui province and from Bayano to the main load center at Panama City. The backbone is also utilized for the importing and exporting of energy to Costa Rica via the Substations of Progreso in Panama and Rio Clara in Costa Rica.

A weak link exists within this transmission backbone between Mata de Nance in the west and Panama City. This weakness limits the power transmission capability of the existing lines to approximately 300 MW. With the Fortuna Hydroelectric Station operating at 300 MW, no power can be imported from Costa Rica.

The transmission line between Mata de Nance and Panama City should be reinforced or overlaid with a new 500 kV backbone of sufficient capacity to serve the needs of the IRHE system well into the twenty first century, and to be capable of being integrated into a future proposed Central American Transmission Grid.

Concurrently with the feasibility studies for this program, it is suggested that studies should be carried out for the 138 kV La Caja - Rio Macho intertie and any other parts of the Costa Rican bulk power system which may impede substantial power flows among the Honduran, Costa Rican and Panamanian systems. Reviewing the bottlenecks from the combined Costa Rica-Panama bulk transmission brochure would be a giant step forward in achieving true coordination of the Central American Interconnected System.

11. Operations. The LDP investigation considered the technical competence and method of operation of the IRHE system. It was concluded that in the main the level of competence is equal to that of most comparably sized U. S. utilities and that IRHE is being operated in a professional manner with good engineering practices being followed.

12. Financial. Financial projections presented by IRHE indicate that, in addition to meeting its financial obligations, IRHE would be able to generate internally a substantial amount of funds needed for its maintenance and construction programs. However, since IRHE's annual operating and investment budgets

C. RECOMMENDATIONS AND CONCLUSIONS (Continued)

must be approved by the central government, the required budgets have in the past been either reduced arbitrarily or have taken a considerable time to be approved. These reductions and delays have resulted in lack of capital funds when required, and lack of spare parts for proper plant maintenance, which has led to the present inadequate generating capacity. To allow IRHE to deal with its maintenance problems, the Panamanian Government should establish some autonomy for IHRE to allocate adequate foreign currency required for plant renovation and maintenance. This policy would cut down the long lead time, usually one year, to obtain the approval of needed funds.

The above financial comments are initial observations. They will be updated following an in depth investigation of the IRHE financial status presently being conducted on behalf of USAID by Stone & Webster Management Consultants Inc.

* * *

I. GENERAL

A. INTRODUCTION AND PURPOSE OF ASSESSMENT

A number of reports have been completed over the last two years addressing the Republic of Panama's forecast power requirements, and the generation and transmission available to meet these requirements. The financial condition of the Institute de Recursos Hidraulicos y Electrificacion (IRHE), the Republic's generation and transmission agency, was examined in these reports and recommendations for increasing generation capacity presented for consideration by international lending institutions. Although many of the recommendations have been accepted and others are in various stages of implementation, the Republic faces a critical short term power supply deficiency in the near term future.

The tasks and purpose of this assessment as authorized by USAID include:

- Review of previous reports in view of the current power supply situation.
- Dispatching a two man team to Panama: to obtain first hand, updated information by consultation with IRHE and USAID Mission personnel; to review operation and maintenance records; and to inspect pertinent physical plant of the IRHE system.
- Providing practical and economic recommendations for avoiding or minimizing the imminent shortfall in generation and transmission capacity.
- Providing an opinion as to the viability and economics of the medium and longer term IRHE system expansion plan now in force taking into account the changing situation relative to fuel costs, availability of finance for capital intensive projects, and management practices.

B. AUTHORIZATION AND DETAILED STATEMENT OF WORK

Laramore, Douglass and Popham (LDP) was authorized to perform this assessment by the United States Agency for International Development (USAID) by Work Order No. 6 (dated 5/13/86) under Indefinite Quantity Contract OTR-1406-I-00-5043-00.

B. AUTHORIZATION AND DETAILED STATEMENT OF WORK (Continued)

The Statement of Work by USAID for Work Order No. 6 is quoted as follows:

1. Review existing studies including IBRD, IDB, Los Alamos and NRECA project papers, energy profiles, etc. (Most of these should be available in Washington).

2. Consult with IRHE (at both technical and managerial level) and with CONADE, IBRD, IDB, PCC Engineers, private sector businessmen and engineers and others knowledgable on Panamanian electrical situation.

   Make explicit recommendation as to strategy, management, and hardware needs.

3. Visit the following generator sites:

   - HYDROELECTRIC: Fortuna, Bayano, Estrella. La Yeguada, Dolega, Macho de Monte.

   - THERMOELECTRIC: 9 de enero No. 1, 9 de enero No. 2, 9 de enero No. 3, 9 de enero No. 4, San Francisco, Pielstick (SF), Turbina Panama, Monte Esperanza, Turbina Gas S.F., Capria, Chitre and Chiriqui.

   Such other sites as USAID/Panama may believe appropriate based on initial findings and consultations. This could include:

   - A transformer station at La Caja, Costa Rica.

   - A gas turbine plant in Guatemala.

4. Provide in-depth exit briefing to U.S. Mission officials on findings.

5. Produce a written report which analyzes the current situation and available options. More specifically, the report should:

   - Summarize the totality of available information, including the IDB, IBRD, and such other studies as may be available;

B. AUTHORIZATION AND DETAILED STATEMENT OF WORK (Continued)

- Examine management practices and needs (including preventive maintenance practices and budget allocation).

- Assess the medium and long term energy outlook and the adequacy of GOP plans, programs, and projects to deal with it.

- Comment on the cost of electric power in Panama, and whether there are measures which could substantially reduce it.

6. Produce an Executive Summary of Findings suitable for presentation to senior political officials in the GOP.

C. VISIT TO PANAMA - REPORT

Two LDP senior engineers were dispatched to Panama to perform the tasks authorized by Work Order No. 6 -- Gareth T. Rees and George T. Kan. Mr. Kan arrived in Panama May 17 and departed June 5, 1987. Mr. Rees arrived May 27 and departed June 12, 1987, after presenting an Executive Summary and briefing the USAID staffs.

Final assessment report was completed in LDP's New York Office and reviewed by R. R. Popham, Principal-in-Charge, prior to release.

9'

II. EXISTING REPORTS

A. REPORTS REVIEWED

The following reports were made available to and were reviewed by LDP:

1. "Loan Proposal for a Project for Operational and Institutional Strengthening of the Instituto de Recursos Hidraulicos y Electrificacion (IRHE)".

   by : Inter-American Development Bank (IDB), 2 December 1986.

   loan : U.S. $34.36 million equivalent plus U. S. $22.91 million equivalent in counterpart funds by IRHE (total U.S. $57.27 million).

   purpose :
   - Complete rehabilitation of Unit 2 and rehabilitate Units 3 & 4 at Bahia Las Minas Thermal Station
   - Expand La Chorrera and Llano Sanchez Substations
   - Add transformers and improve San Fransisco and Maranon Substations.
   - Procure O & M equipment for IRHE's system.
   - Execution of studies for: forecast methodology, Teribe & Changuinola River Basin, Dispatch Center diagnois, system losses investigation, preventive maintenance, and human resources efficiency.

2. "Project Report, Panama, Project for Operational and Institutional Strengthening of the IRHE". (Same projects as in subparagraph IIA1 above.)

   by : The Inter-American Development Bank (IDB), 2 December 1986.

   loan : Proposed loan of U.S. $34.36 million plus U.S. $22.91 million equivalent counterpart funds by IRHE.

   purpose: See description under subparagraph IIA1 above.

10

A. REPORTS REVIEWED (Continued)

3. "Report and Recommendation of the President of the IBRD to the Executive Directors on a Proposed Loan ... for a Seventh Power Project".

by : International Bank for Reconstruction and Development (IBRD), 19 February 1985.

loan : U.S. $51.00 million plus U.S. $28.1 million equivalent in local currency.

purpose: Second stage of Fortuna Hydroelectric Project to raise dam height and increase generating capacity by 247 GWh annually. Also includes field investigation of 10 medium size hydro projects and feasibility studies for selected two projects; and an asset revaluation study.

4. "Staff Appraisal Report, Panama, Seventh Power Project." (Same project as in subparagraph IIA3 above.)

by : The World Bank, 19 February 1985

loan : Proposed IBRD loan of U.S. $51.00 million plus U. S. $28.1 million equivalent in local currency.

purpose: Second stage of Fortuna Hydroelectric Project (see description under subparagraph IIA3 above).

5. "Suministro De Energia Periodo 1987-1990, Analisis Y Soluciones" (Summary of Energy, Period 1987-1990, Analysis and Solutions).

by : IRHE April 1987

purpose: Analyze and put forward solutions to the shortfall in available electrical generation within the IRHE system.

6. "Plan Maestro De Expansion, Sistema Nacional Intergrado, Republica De Panama" (Master Plan for the Expansion of the Integrated National System, Republic of Panama).

by : IRHE April 1986

purpose: Formulation of a master plan for the development of the power system in Panama based on projected demands.

A. REPORTS REVIEWED (Continued)

7. "Direccion Ejecutiva de Desarrollo, Requerimientos de Generacion Para El Periodo 1987-1990" (Executive Directive on Development, Generation Requirements for the Period 1987-1990).

by : IRHE May 1986

purpose: Recommendations for meeting the national integrated energy need taking into consideration the energy requirements of the countries in Central America.

8. "Coal-fired Power Plant Project Feasibility Report".

by : Japan International Corporation Agency

purpose: Examine feasibility of installing a coal fired generating station.

B. APPROACH USED IN SUMMARIZING REPORTS REVIEWED

LDP has summarized information from the above reports as a background for its Panama electric power assessment task. For convenience this summary is presented in paragraphs C and D below. When convenient and pertinent, actual text and tables from earlier reports have been used in the summary, either in whole or in part, or paraphrased. The intent of the summary is to present the report information and conclusions without any change other than abbreviation or in method of presentation.

C. TECHNICAL INFORMATION FROM PRIOR REPORTS

1. Introduction (Ref. IIA3, pgs. 7, 8 & 9; and IIA1, pg. 7)

Panama depends on imported petroleum for about 90 percent of its total commercial energy supply. In the late 1970's the Government initiated a national campaign for conservation which was coupled to a policy for substituting hydro for thermal electric power generation. This has helped reduce the share of thermal generation from 94 percent in 1975 to 31 percent in 1984, while total sales increased from 1,026 GWh to 1,815 GWh. Approximately (as of date of report) 29 percent of electricity consumption is residential, while 32 percent is commercial, reflecting the importance of the services sector in the economy. Industry accounts for about 12 percent and the Government and street lighting for about 20 percent. Other consumers represent 7 percent. The average rate of increase of

C. TECHNICAL INFORMATION FROM PRIOR REPORTS (Continued)

electricity consumption between 1977 and 1984 was reduced from about 8 percent to 6.4 percent due to conservation, generation restrictions and a sluggish economy. Per capita electricity consumption in 1984 was about 940 kWh, among the highest in Latin America.

The Instituto de Recursos Hidraulicos y Electrificacion (IRHE) is the principal organization engaged in generating, transmitting and selling electric in Panama. It renders its services through the National Integrated System (SIN) and small separate systems. The SIN is composed of the Metropolitan, Panama-Occidente, Central and Chiriqu province subsystems.

IRHE is responsible for supplying electricity service to the entire country of Panama with the exception of the Canal Zone. Its responsibility extends, therefore, to 87% of the potential electricity market.

With the completion of the Fortuna Hydroelectric Project at the end of 1984, IRHE's installed capacity reached 824 MW of which about 69 percent was hydroelectric capacity. The Panama Canal Commission has an additional 210 MW and other agencies have another 61 MW capacity (a total of 271 MW) in areas not yet served by IRHE.

The present expansion program (as of date of report) is based on a Master Plan for 1979-2003, prepared by IRHE in 1976. Currently the Plan covers the period 1984-2003, and consists of the second stage of the Fortuna Project and the installation of a third 75 MW generating unit at the Bayano Hydroelectric Station in 1990. Due to current financial constraints, the construction of the 300 MW Changuinola Hydroelectric Project, originally scheduled for operation in 1992, has been postponed and is being replaced by smaller power plants. The development program also includes the necessary transmission and distribution systems to extend the service, and the interconnection of the national grid with the Costa Rican grid. IRHE is presently carrying out the first stage of a five year rural electrification program.

The main constraints to the development of the hydroelectric power program are the high investment cost and the relatively high electricity losses (15.3 percent in 1983, and 17.7 percent in 1984) resulting from the remoteness of the hydro sites from the main areas of use.

C. TECHNICAL INFORMATION FROM PRIOR REPORTS (Continued)

To fill the gaps resulting from the lack of long term financing for its construction program in 1980-82, IRHE resorted to excessive short and medium term borrowing, which threatened its financial position. To avoid a recurrence, IRHE agreed with the IBRD not to incur any short term debt which would cause its total short term debt to exceed 20 percent of its cash operating, maintenance and administrative expenses during the preceeding 12 months. IRHE also agreed not to incur without IBRD approval, any long term debt if its net revenues do not cover its maximum future debt service requirements more than 1.4 times.

Financial projections (as of date of report) indicate that IRHE would be able to generate internally approximately 66 percent of the financing needs for its construction program for 1984-89, with overall moderate increases in tis tariffs. In view of savings in fuel costs due to conversion to hydropower, projected tariff increases would be in line with projected inflation rates over the coming few years.

2. Generating System (Ref. IIA1, pgs. 8 & 9, and IIA2, pg. 9).

IRHE's installed generating capacity increased twofold in the period 1975-1985, from 422 MW to 852 MW. Thermal electric generating capacity had increased only 43 MW over that in 1975 (256 MW). Meantime, hydroelectric generating capacity increased from 166 MW to 551 MW.

Up until the year 1975 electric generating capacity was mainly thermal and most of it came from the Bahia Las Minas (thermal) Power Station. The thermal electric power stations are near demand centers, and the distances and distribution losses are therefore small. The Bahia Las Minas Power Station is located at Colon, 60 km in a straight line from Panama City.

Owing to the high cost of petroleum, Panama decided to make intensive use of its hydroelectric resources and in the year 1975 it set in operation the Bayano Power Station with a capacity of 150 MW. The station is located 75 km east of Panama City. At the same time, the IRHE began two more hydroelectric projects known as La Estrella and Los Valles, with a combined generating capacity of 90 Mw. Both stations became operational in 1978. The location of these two stations is near David, 450 km to the West of Panama City.

14

C. TECHNICAL INFORMATION FROM PRIOR REPORTS (Continued)

Later, the IRHE proceeded to build the La Fortuna Hydroelectric Power Station which became operational in 1984, adding 300 MW to the national system. This station is also located near David. The center of gravity of the electric generating system of Panama has been moving westward, and as it moved the system became longer and transmission system losses increased.

Investigation continues on geothermal, bio-mass and wind energy possibilities, and small deposits of coal have been identified. But these resources will not contribute appreciably to the electric power sector, at least in the forseeable future.

In spite of the major effort by IRHE to develop Panama's major renewable energy resource, hydroelectric power is insufficient to supply national demand. Therefore it has been necessary to resort to thermal electric generating plants, with a consequent increase in the demand for imported fuel. On the basis of the expansion program now in force, it appears that IRHE will face difficulty during the rest of the 20th century in meeting its energy demand with its own renewable resources. Therefore, the Republic of Panama will be forced to continue to spend financial assests to purchase electric energy from the rest of Central America or continue to import fuel.

3. Transmission and Distribution System (Ref. IIA1, pg. 9 & IIA4, pg. 8).

At the end of 1985, IRHE had 827 km of transmission lines, of which 555 km had a voltage rating of 230 kV, and 260 km had a rating of 115 kV, whereas the remaining 12 km were rated at 44 kV. See Exhibits A and B.

By the end of 1984, distribution systems totalled 5,200 km of lines 34.5 kV and lower. The IDB has provided financing of U. S. $16.8 million for an estimated U. S. $26 million for a first stage rural electrification program which includes 1,400 km of 34.5 kV lines to serve 13,500 new rural customers. This program was scheduled for completion in 1987.

4. The Central American Interconnected System (Ref. IIA1, pg. 9).

The Central American Interconnected System is composed of two groups. The first one includes the Guatemala and El Salavador systems; the second one, the Honduras, Nicaragua, Costa Rica and Panama systems. There are no plans for interconnecting the two groups. Panama joined the last group in 1986 and since then has exchanged small amounts of energy with Costa Rica.

C. TECHNICAL INFORMATION FROM PRIOR REPORTS (Continued)

Almost all the lines of the second group are rated at 230 kV. In Panama these lines extend from the Mata de Nance Substation near Costa Rica to the capital city and 75 km east therefrom to Bayano Hydro Station. However, along the Costa Rica-Panama City section, the line is restricted, since 70 percent of Panama's hydroelectric generating capacity is located near the boundary with Costa Rica. The two conductor line from Mata de Nance to Panama City therefore can transmit energy from Costa Rica only at such times as the Panamanian power stations are not operating at full capacity.

IRHE is making arrangements (as of date of report) to purchase energy from Honduras; but before it can conclude the negotiations, it will be necessary for the four countries of the interconnected group to agree on the rates for transporting energy over the transmission systems of Nicaragua and Costa Rica. Predicted purchase is on the order of 25 MW which will reduce fuel expenditure. It will have no effect on the IRHE expansion program, since sales from the Central American System are not assured, and reliability of the transmission system is not high.

5. Projection of Future Power Requirements (Ref. IIA1, pgs. 7, 9 & 10).

Projections of sales and energy requirements for the period 1986-2002, computed by the IRHE (as of date of report) are summarized as follows:

	1986	1990	1995	2000	2005
Total sales (GWh)	2,003	2,707	3,597	4,837	6,550
Losses (GWh)	447	452	610	726	983
Requirements (GWh)	2,460	3,159	4,208	5,563	7,533

Note: Also see Exhibit C reproduced from Annex 3.1 of Ref. IIA4.

In the period 1986-1990 the average growth of sales is projected at 7.4% falling to 5.9% in the period 1990-1995 and picking up to 6.2% in the period 1995-2005. These projected growths compare with actual average sales growths of 8.5% between 1970-74, 8% for 1975-80 and 5.4% for 1981-85, the fall off in the latter period being attrituable to the significantly lower level of economic activity during this time (plus conservation measures and generation restrictions; see Introduction above).

C. TECHNICAL INFORMATION FROM PRIOR REPORTS (Continued)

6. IRHE Expansion Program (Ref. IIA1, pgs. 10, 11 & 14).

The IRHE expansion program (as of date of report) calls for the installation of two gas turbines rated at 30 MW each in 1989; for raising the height of Fortuna Dam also in 1989; for installation in 1990 of a combined cycle power station (using the two gas turbines mentioned earlier), installation of a coal fired power station rated at 150 MW in 1992, setting in operation of the 83 MW Esti-Barrigon Hydroelectric Station in 1994, the 300 MW Changuinola I Hydroelectric Station in 1998, and the 306 MW Changuinola II Hydroelectric Station in the year 2002.

This program has not (as of date of report) been revised to take into account the decline in oil prices during 1986. Since the program was drawn up when oil prices were higher, there could be a deferral of such power stations in the program as would replace the use of oil (coal fired plant and Esti-Barrigon).

In the years 1987-1990 Panama will face a critical period in the supply of electric energy. During that period of time two events are expected to occur that would affect the generating capacity: raising of the height of the Fortuna Hydroelectric Station (dam) and reconditioning of Bahia Las Minas (thermal) Power Station.

Raising the height of the Fortuna Dam by 40m is intended to enhance the capability of the power station and increase its energy output by 247 GWh per annum (using the existing generating equipment); but during the construction period, on grounds of safety, the levels of the existing reservoir must be lowered with consequent reduction in delivery of energy to the system.

Reconditioning of the Bahia Las Minas Station is intended to restore its units to their original levels of capability and efficiency. Rehabilitation was scheduled to be completed before commencing any work on the Fortuna facility.

Accordingly, it is quite likely that over a period of 18 months, starting in July 1988 up until at least the end of 1989, the IRHE will be unable to generate the necessary energy to supply demand. So, in addition to having to increase purchase from the Central American Interconnected System, it must seriously consider installing additional generating capacity by purchasing gas turbines.

C. TECHNICAL INFORMATION FROM PRIOR REPORTS (Continued)

7. Energy Losses (Ref. IIA1, pg. 15).

A review completed by the IDB supports the conclusion that the IRHE does have deficiencies with respect to the maintenance of its facilities, reflected in the increased level of losses in its distribution grid and in diminished efficiency of its thermal electric stations.

IRHE records show the following electric system losses:

	1980	1981	1982	1983	1984	1985
Losses (%)	17.1	16.6	17.6	17.9	18.4	19.5

The IRHE prepared a study of the losses and arrived at certain very general conclusions. It is necessary to carry on with the studies in depth and clearly define the origin and nature of the losses, including losses unaccounted for.

8. Load Coverage (Ref. IIA4, Annexes 3.2 & 3.3, and IIA4, pg. 8).

Exhibits D and E indicate the 1982-84 actual energy and capacity balances for the IRHE system, and the projected balances for 1985 through 1990. These Exhibits are reproductions of Annexes included with the IBRD Staff Appraisal Report of early 1985 (Ref. IIA4). They include the Second Stage of Fortuna Hydroelectric Station but not the reconditioning of Bahia Las Minas Thermal Station. Imports of power from Costa Rica and Canal Zone are also excluded.

Exhibit F is a breakdown of installed generation capacity in Panama as of 1984.

9. Maintenance (Ref. IIA1, pg. 15).

Maintenance of the IRHE's facilities has presented problems in the past, as witness the poor conditions under which Bahia Las Minas Station is operating. These conditions have made it available only 80% of the time and caused its efficiency in fuel use to decline 20%. Reconditioning of this station is vital.

Another cause for concern is (as of date of report) the age and obsolesence of IRHE's load dispatching center. Its state is such as to question the prompt restoration of service once unscheduled outages take place. In addition, loads from the power stations in the system are not being dispatched at economic optimum.

D. FINANCIAL INFORMATION FROM PRIOR REPORTS

1. Approved Loans (Ref. IIA1, pg. 3; IIA2, pg. 3; & IIA4, pg. 5).

As of December 1986, the IDB has approved seven loans for a total of U. S. $207.8 million equivalent to finance energy projects in the Republic of Panama. The first five add up to U. S. $188 million equivalent and were intended to partly finance the Fortuna Hydroelectric Project; the last two add up to U. S. $19.8 million equivalent and were designed to partly finance a rural electrification project.

Loans for the Fortuna Phase 1 Project are now disbursed in full. Loans for the rural electrification program are in the disbursement process.

The table which follows sets forth the basic information on these IDB loans:

Loan	Date of Approval	Date of Subscription	Date of Final Disbursement	U.S. $ Equiv. (000) Loan	Counterpart
7/IC-PN	8/18/77	12/21/83	12/21/83	40,000	161,900
8/IC-PN	8/18/77	12/21/83	12/21/83	28,000	161,900
17/VF-PN	8/18/77	12/21/83	12/21/83	30,000	161,900
7A/IC-PN	5/17/83	5/24/83	1/24/85	30,000	319,000
122/IC-PN	5/17/83	5/24/83	9/24/85	60,000	319,000
399/OC-PN	3/26/81	4/28/81	4/28/87	3,200	13,200
649/SF-PN	3/26/81	4/28/81	4/28/87	16,600	13,200
			Total	207,800	1,150,100

As of 1984, the IBRD had made six loans to the IRHE totalling U. S. $204.4 million as follows:

Loan & Year	Purpose	U. S. $ (000)
322-PAN, 1962 (First Power Project)	Rural electrification	4,000
661-PAN, 1970 (Second Power Project)	Bayano 150MW hydro & Las Minas 40MW thermal expansion, etc.	42,000
948-PAN, 1973 (Third Power Project)	San Francisco 25MW diesel project, transmission, etc.	30,000

D. FINANCIAL INFORMATION FROM PRIOR REPORTS (Continued)

Loan & Year	Purpose	U. S. $ (000)
1470-PAN, 1977 (Fourth Power Project)	Fortuna 300MW hydro, transmission, etc. (1st & 2nd Tranches)	73,300
1778-PAN, 1980 (Fifth Power Project)	Distribution rehab and expansion	23,000
2313-PAN, 1980 (Sixth Power Project)	Complete distribution rehab and expansion	32,100
	Total	204,400

The projects covered by the first three IBRD loans were successfully completed with some delays and cost overruns. Fortuna, the Fourth Power Project, encountered poor geological conditions which resulted in a 16 month delay and a 93 percent overrun which both IBRD and IDB helped to finance through supplemental loans. The Fifth Power Project was completed as scheduled with a 50 percent overrun, and the Sixth Power Project had advanced satisfactorily (in 1984-85).

2. Performance of Contract Clauses (Ref. IIA1, pgs. 4, 5 & 6).

In the framework of the approval loans, the IRHE acquired different financial obligations which were performed in due course; however, it did have difficulty in fully performing two clauses.

a. Tariffs. Tariffs were to be set to provide revenue to cover all operating expenses of the system including depreciation. Rate of return objectives on fixed investment were set at 7% in 1977, 8% in 1978 and 8.75% thereafter. IRHE essentially achieved these objectives through 1981 but the rate dropped thereafter to 7.20% in 1982, 5.23% in 1983, 7.21% in 1984, and 6.10% in 1985. 1982 and 1983 performance are attributed mainly to a severe drought which caused substantial increases in fuel purchases. In 1984, Fortuna came on line and the rate base increased with consequent reduction in rate of return.

In addition, implementation of the ambitious IRHE investment program has left institutional and operational vacuums that must be filled promptly. The program for Operational and Institutional Strengthening (Ref. IIA2) is regarded as having special importance for correcting these problems.

D. FINANCIAL INFORMATION FROM PRIOR REPORTS (Continued)

b. Past Due Debts. According to clause 6.07(b) of the contract for IDB loan 7A/IC-PN, the Government of Panama was required to bring up to date by June 30, 1984 all IRHE accounts receivable from the Central Government and independent public institutions, and to keep these accounts up to date for the life of the loan contract. Similarly municipal accounts receivable were required to be brought up to date.

All arrangements presented by the Government for updating accounts receivable have been performed as proposed except those with the Water Supply and Sewerage Institute and the Bureau of Civil Aeronautics. Instead these accounts have continued to increase. Measures have been proposed to ensure payments of these debts.

III. DATA GATHERING IN PANAMA

A. DISCUSSIONS WITH USAID MISSION

Upon arrival at the USAID office in Panama City, the LDP engineers were briefed by Mr. Tom Miller, AID Program Operation Officer, and Mr. Jose Sanchez, AID Engineer. The LDP engineers were informed that the purpose of this mission is to help the Panamanian Government sort out the alternatives available to them related to the existing power shortage situation. The Panamanian Government will need to decide what alternative it wishes to take. The purpose of the third party investigation is to provide objective and unbiased opinions and recommendations.

Beside providing office facilities and typing services, the AID officers also accompanied the LDP engineers in many visits to the IRHE's offices and generating sites.

B. DICSUSSIONS WITH IRHE

Many visits were made to the IRHE's offices and generating sites, including the load dispatching center. Discussions were held with the following IRHE officials, separately and together, on many different occasions.

Ing. Miguel A. Mann H., Sub-Director, Planning
Ing. Carlos E. Rodriguez B., Technical Director
Ing. Jose Luis Saiz U., Operation Director
Ing. Juan Barnes Garay, Sub-Director General
Ing. Manuel H. Barrelier C., Director General

The first draft of the study report by LDP was submitted and reviewed by Ing. Saiz and Ing. Rodriguez for its content and accuracy.

C. VISITS TO IRHE GENERATING STATIONS

The following sites were visited by the LDP engineers, escorted by Ing. Rodriguez of IRHE:

Las Minas Generating Station
San Francisco Generating Station
Bayano Hydroelectric Station
Panama Gas Turbine Station

C. VISITS TO IRHE GENERATING STATIONS (Continued)

Fortuna Hydroelectric Station
Los Valles Hydroelectric Station
La Estrella Hydroelectric Station
Capira Diesel Generating Station
IRHE Load Dispatching Center
IRHE Substations at Panama.

D. VISIT TO COSTA RICA

An LDP engineer visited Instituto Costarricense de Electricidad, (ICE), Costa Rica, on June 3, 1987. Discussions were held with the following ICE officials to determine what problems exist with the power system interconnection from Honduras through Costa Rica to Panama:

Ing. Ricardo Chinchilla G., Chief, Department of Control & Energy
Ing. Guillermo Emilio Alvarado U., Chief, Department of Transmission of Energy
Ing. Edwin G. Bogantes Villegas, Chief Officer, Maintenance of Substations
Ing. Jorge Villalobos Astorga, Officer, Maintenance of Substations
Ing. Luis A. Barguero, Officer of Operations, Department of Control of Energy.

IV. ASSESSMENT OF SITUATION

A. UPDATE OF ELECTRICITY SUPPLY AND DEMAND

At the beginning of 1987, IRHE's installed capacity was 817 MW, of which about 67 percent was hydroelectric capacity. The Panama Canal Commission has 210 MW (94.5 MW hydro and 115.5 MW thermal power plants). Other agencies have another 61 MW capacity in areas not yet served by IRHE. Because of a dry year, inadequate water storage and thermal unit outages, available capacity of IRHE's existing generating stations was only 390 MW, with an additional 55 MW of imported capacity being available (about 445 MW total). This compares with the projected peak load for the year, estimated at 463 MW. The present supply capacity is not adequate to meet the demand even if no reserve capacity is required. A program is presently underway to add 60 MW of gas turbine power by the middle of 1988, and to complete the second stage Fortuna Project by 1990. If the Fortuna Project were to be completed on schedule, a surplus of capacity including a 15% reserve would be available until 1994 when a shortage would reappear absent additional capacity. However, it is expected that Fortuna II will be delayed.

During March 1987, IRHE demand peaked at 450 MW causing action to be taken by IRHE in the form of "Load Shedding". This situation will be worse in 1988 when the peak is expected to increase to 499 MW.

Figure IV-1 shows the usage of power in the Republic of Panama. As can be seen, the government uses 14 percent of the available power of which 74 percent is for air conditioning. This was equivalent to 47 MW during peak loads in March 1987. By requesting the shutting off of air conditioning in all public buildings and the use of load shedding, IRHE managed to reduce the peak generation load to 383 MW, just under the maximum operating capacity of 390 MW, and thus avoided further brownouts.

Assuming that the demand for electricity increases as it has in the last few years, brownouts during 1988 are a real possibility, particularly if a dry year is experienced.

24

B. FACTORS LEADING UP TO THE CURRENT CRISIS

The first stage Fortuna Hydroelectric Project was scheduled for completion in 1982. It was actually completed in 1984, with cost overrun of 93 percent. The thermal units at Las Minas were scheduled for maintenance in 1983-1984 but instead had to remain on-line to make up for the unavailability of power from Fortuna. The scheduled maintenance at Las Minas was never performed and, as a result, Units 1 & 2 are down and operating efficiencies of Units 3 & 4 suffer. The first stage of the Fortuna Project has also suffered from design problems. The current dam forms a reservoir which has only a four day supply of water for the turbines at rated capacity. (However, the turbines rarely generate at full output.) The second stage project will increase the capacity of the reservoir to a 40 day supply of water and increase power availability by 75 MW. This stage is scheduled to be completed in 1990 but is already behind schedule.

Difficulty has been experienced in obtaining the necessary funds for maintenance of the Pielstick diesel generating units at San Francisco in a timely manner. In an attempt to ensure at least partial output from the plant, two of the units have been cannibalized to supply parts for the two remaining operational units. This example illustrated the problem associated with funding of maintenance and repair of existing thermal units and is an indication of the low priority given to the maintainance of thermal generating plants.

C. IRHE AND ITS ORGANIZATION

The Institute de Recursos Hidraulicos y Electrificacion (IRHE) is the only integrated body engaged in generating, transmitting and selling electric energy in Panama. IRHE was created by Law No. 31 of 1961. Until 1972, it provided power to the Central Provinces with the exception of Santiago. From 1972-1978, it gradually acquired the various power companies throughout Panama, and in 1979 interconnected the varicus power grids to form one large system. In the process of integrating the various power companies, IRHE has inherited labor unions with substantial power.

IRHE is directed by a seven member Board of Directors and a Director General. The Chairman is the Minister of Planning and Economic Policy. Other members are the Ministers of Agriculture and of Commerce and Industry, and the representatives of the Association of Industrialists, of the Banking Association, of the Society of Engineers and Architects, and of IRHE's Labor Union. IRHE's annual operating and investment budget must be approved by the Government's Economic Cabinet.

C. IRHE AND ITS ORGANIZATION (Continued)

The LDP investigation briefly reviewed the technical competence and method of operation of the IRHE system. It was concluded that in the main the level of competence is equal to that of most comparably sized U. S. utilities and that the utility is being operated in a professional manner with good engineering practices being followed.

D. POWER DEMAND AND SUPPLY BALANCE

The following power demand and supply balance has been developed from information obtained from IRHE, assuming that the IRHE "Master Plan for Expansion" dated April 1986 is implemented on schedule. It has been further assumed that the IRHE projected peak load demands include all associated transmission, distribution and unaccounted for losses.

1. Capacity of Existing Hydroelectric Stations

As of April 1987, the total installed and available capacity of IRHE's hydroelectric stations are as shown below:

Plant	Installed Capacity (MW)	Number of Units	Year of Commission	Available Capacity (MW)
Bayano	150	2	1976	116.0
La Estrella	43	2	1978	11.0
Los Valles	47	2	1979	13.0
Yeguada	7	1	1967	3.0
Dolega	3	1	1937	0.4
Fortuna	300	3	1984	106.0
TOTAL	550			249.4

As seen from the above, the total installed capacity of the hydro stations is 550 MW while the available capacity is only 249.4 MW. The main reason for the low available capacity was the lack of rain during the first quarter of 1987 and the limited water storage capacity, particularly at Fortuna. The available capacity for the dry season in 1990 is expected to rise to 325 MW, when the second stage Fortuna Project is scheduled for completion.

26

D. POWER DEMAND AND SUPPLY BALANCE (Continued)

2. Capacity of Existing Thermal Power Stations

As of April 1987, the total installed and available capacity of IRHE's thermal power stations are as shown below.

Plant	Installed Capacity (MW)	Number of Units	Year of Commission	Available Capacity (MW)
Las Minas 1	22	1	1964	0
Las Minas 2	40	1	1969	0
Las Minas 3, 4	80	2	1972-74	66
San Francisco 3	11	1	1960	7
Chitre	14	6	1972	6
Capira	5	6	1972	3
Pto. Armuelles	5	2	1972	2
Pielstick	20	4	1976	8
San Francisco 4	12	1	1964	0
Panama	40	2	1982	34
Mount Hope	18	1	1970	15
TOTAL	267			141

The total installed capacity of the thermal stations is 267 MW while the actual available capacity is only 141 MW. The loss of capacity was due to the lack of funds for repair and maintenance. Also, Pielstick 1 and 2 have been cannibalized to supply parts for Pielstick 3 and 4.

3. Capacity of Imported Power

As of April 1987, the total available capacity of imported power was 55 MW. The 55 MW figure is made up of 50 MW from interconnections with Central America plus 5 MW of available capacity from the Canal Zone. This imported figure is considered firm power during peak load conditions, although in practice it will be imported for use during off peak periods in exchange for reduced hydro generation and thus provide water storage for use during peak periods.

4. Total Capacity of Existing System

As of April 1987, the total installed and available capacity of the IRHE's system from all sources are as shown below.

D. POWER DEMAND AND SUPPLY BALANCE (Continued)

Source	Installed Capacity (MW)	Available Capacity (MW)
Hydro Power	550	249.4
Thermal Power	267	141.0
Imported Power	55	55.0
TOTAL	872	445.4

The above available capacities are generation capacities. No deduction has been taken for transmission, distribution of unaccounted for losses.

5. Nearterm Power Demand and Supply Forecast

Table IV-1 shows the projected available capacities and demands developed from IRHE forecasts for the years 1987 through 1994. The projections of demands are based on gorwth of sales in recent years, and the proposed new bulk sales expected during the period to Petroterminales Trans-Isthmus Pipeline and Chiriqui Land Company, presently large customers of IRHE who decided to purchase the balance of their electricity needs from IRHE's system rather than to generate their own power.

The available capacities are based on IRHE Master Plan for Expansion dated April 1986 as shown below:

a. Return Las Minas Unit No. 1 to service by January of 1988.

b. Return Pielstick No. 1 at San Francisco to service by January of 1988.

c. Purchase, install and place on line a 60 MW (2 x 30 MW) gas turbine plant by May 1988 at Las Minas.

d. Return Las Minas No. 2 to service by January 1989.

e. Return Pielstick No. 2 at San Francisco to service, by January 1989.

f. Second stage Fortuna Project completed by January 1990.

g. Combined cycle for the gas turbines at Las Minas completed by January 1990.

FIGURE IV-1

REPUBLIC OF PANAMA POWER EXPENDITURE

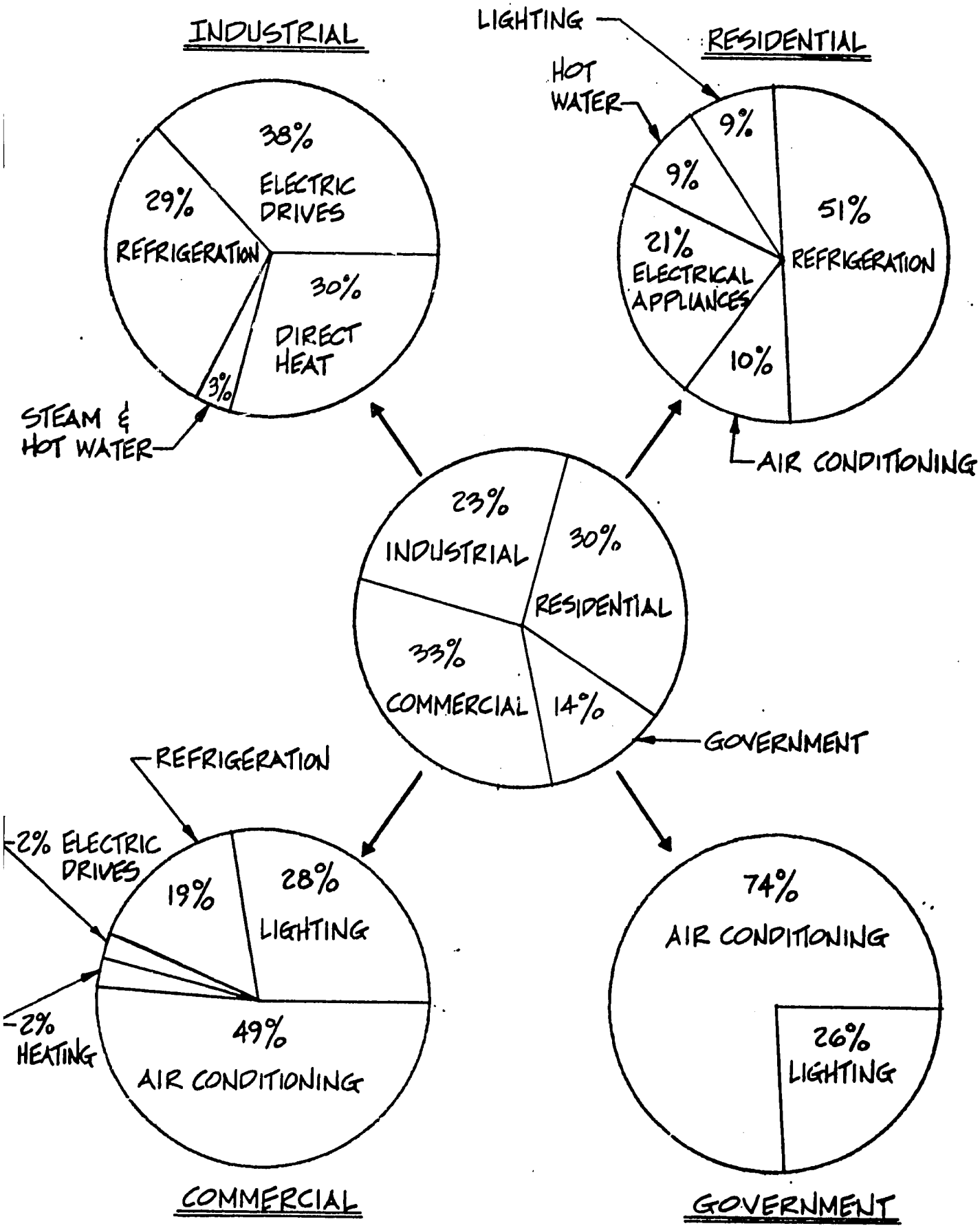

D. POWER DEMAND AND SUPPLY BALANCE (Continued)

h. Las Minas 3 and 4 restored to their nameplate ratings by January 1990.

i. Addition of Esti-Barrigon hydroelectric power plant or a similarly sized hydro plant by January 1992.

During the period of 1988-1990, two events are expected to occur that would affect the generating capacity: rehabilitation of Las Minas 3 and 4 and raising the height of the Fortuna dam. Both of these events require reduction in the delivery of energy to the system. The reduction in capacities of these plants have not been reflected in Table IV-1.

6. Reserve Margin

The reserve margin of a power system must be sufficient to cope with shutdown of power plants for scheduled maintenance and forced outage. The reliability criterion for loss-of-load probability (LOLP) adopted by IRHE is that it should not be more than 2 days per year. A 15 percent reserve capacity, as computed by IRHE and reported in "Plan Maestro de Expansion", dated April 1986, is required to secure an LOLP of 2 days per year.

From the power demand and supply forecast, Table IV-1, it can be seen that this reserve capacity margin for the assumed projections will be achieved for the years 1990 through 1993, and will be less than the IRHE criteria of 15% for the years 1989 and 1994. For the years 1987 and 1988 the reserve margin will be negative, i.e., demand not being met by installed capacity. The negative margin will occur earlier if Fortuna II and rehabilitation at Las Minas and San Francisco are delayed.

Table IV-1

YEAR		1987	1988	1989	1990	1991	1992	1993	1994
Available Capacity									
Hydro	(MW)	249.4	249.4	249.4	324.4(1)	324.4	412.4(7)	412.4	412.4
Thermal	(MW)	141	168(2)	273(3)	307(6)	307	307	307	307
Imported (5)	(MW)	55	55	55	55	55	55	55	55
Total (A)	(MW)	445.4	472.4	577.4	686.4	686.4	774.4	774.4	774.4
Peak Load (4) (B)	(MW)	463	499	525	552	572	605	640	678
Shortfall (-) or Surplus (+) (A) - (B)	(MW)	-17.6	-26.6	52.4	134.4	114.4	169.4	134.4	96.4
Reserve Capacity %		- 4.0	- 5.6	9.0	19.6	16.7	21.9	17.4	12.5

(1) Assume second stage Fortuna Project completed on schedule (additional 75 MW available capacity).
(2) Assume rehabilitation of Las Minas Unit 1 and Pielstick No. 1 at San Francisco (additional 27 MW of available capacity).
(3) Assume rehabilitation of Las Minas Unit 2 and Pielstick No. 2 at San Francisco, and installation of 60 MW gas turbine plant at Las Minas (additional 105 MW available capacity).
(4) Demand Forecast by IRHE (Feb 17, 1987), and it is assumed that this estimated figure includes all losses from generation to consumption.
(5) Purchase of 55 MW from Honduras, Costa Rica and Canal Zone.
(6) Addition of combined cycle to Las Minas gas turbines; Las Minas 3 and 4 restored to nameplate rating (additional 34 MW of available capacity).
(7) Addition of Esti-Barrigon Hydroelectric Power Station (additional 88 MW of available capacity).

E. ENERGY DEMAND AND SUPPLY BALANCE

The following energy demand and supply balance has been developed from information obtained from IRHE, assuming that the IRHE "Master Plan for Expansion" dated April 1986 is implemented on schedule.

1. Energy Available from Existing Hydroelectric Stations

For the year 1987, the available energy from IRHE's hydro stations is as shown below:

Plant	Installed Capacity (MW)	Number of Units	Energy Available GWH (1)
Bayano	150	2	485
La Estrella	43	2)	432
Los Valles	47	2)	
Yeguada	7	1	35 (2)
Fortuna	300	3	1197
TOTAL	547		2149

(1) Energy available figures with the exception of Yeguada were taken from Direccion Ejecutiva de Desarrollo (Executive Plan for Development), Requirements for Generation for the Period 1987-1990, issued May 1986. The figures are the worst condition figures (i.e. a dry year has been assumed).

(2) Energy available figure for Yeguada was taken from the IRHE Master Plan for Expansion, dated April 1986 (Appendix D).

Note: Dolega's contribution has been assumed to be negligible and hence not considered.

E. ENERGY DEMAND AND SUPPLY BALANCE (Continued)

2. Energy Available from Existing Thermal Stations

For the year 1987, the available energy from IRHE's thermal stations is as shown below:

Plant	Installed Capacity (MW)	Number of Units	Energy Available GWH (1)
Las Minas 1	22	1	0
Las Minas 2	40	1	0
Las Minas 3, 4	80	2	601 (2)
San Francisco 3	11	1	68
Chitre	14	6	32
Capira	5	6	17
Pto. Armuelles	5	2	8
Pielstick (SF)	20	4	50 (3)
San Francisco 4	12	1	0
Panama	40	2	94
Mount Hope	18	1	0
TOTAL	267		870

(1) The energy available figures with the exception of Las Minas 3 and 4 and Pielstick units (SF) were taken from the IRHE Master Plan for Expansion, dated April 1986 (Appendix B, page 2).

(2) The energy available figure for Las Minas 3 and 4 was developed from Direccion Ejecutiva de Desarrollo (Executive Plan for Development), Requirements for Generation for the Period 1987-1990, issued May 1986. The figure was developed by taking the energy generated during the month of April and assuming that rate is maintained throughout the year.

(3) The energy available figure for the Pielstick units (SF) was taken from IRHE Master Plan for Expansion dated April 1986 (Appendix B, page 2), modified to take into account only two of the four units being operational and the two operational units being derated due to cooling problems.

E. ENERGY DEMAND AND SUPPLY BALANCE (Continued)

3. Existing Imported Energy Sources.

For the year 1987, available imported energy for the IRHE System is as shown below. The energy imported from Honduras and Costa Rica was based on actual IRHE data for the first four months of 1987.

Source	Imported Capacity (MW)	Energy Available (GWH)
E.N.E.E. Honduras)		
	50	132
ICE Costa Rica)		
Canal Zone	5	6
TOTAL	55	138

4. Total Energy Available from Existing System

For the year 1987, the total available energy from all sources is as shown below:

Source	Installed Capacity (MW)	Energy Available GWH
Hydro Power	547	2149
Thermal Power	267	870
Imported Power	55	138
TOTAL	869	3157

The actual energy available at points of distribution is 3000 GWH. This figure takes into account a 5% transmission loss.

5. Total System Energy Requirements

For the year 1987 the total energy required for the IRHE's system is as shown below.

E. ENERGY DEMAND AND SUPPLY BALANCE (Continued)

Consumer	Maximum Demand (MW) (3)		Energy Required GWH (3)
Government	93	(8.00-18.00) (2)	374
Commercial	151	(8.00-18.00)	909
Industrial	84	(8.00-15.00)	611
Residential	140	(20.00-21.00)	823
TOTAL (1)	428	(13.00-15.00)	2717

(1) System maximum demand.

(2) Hours of the day maximum demand takes place.

(3) Maximum demand and energy consumption figures extracted from IRHE "Suministro de Energia" (Supply of Energy), Period 1987-1990, Analysis and Solutions, dated April 1987. (Appendix I, page 5).

6. Nearterm Energy Demand and Supply Forecast.

Table IV-2 shows the projected available energy and demands developed from IRHE forecasts for the year 1987 through 1994. In addition to the assumptions made in paragraph IV D5 above, two additional assumptions used are given below.

a. The load profiles presented in IRHE "Suministro de Energia" (Supply of Energy, Period 1987-1990, Analysis and Solutions, Appendix I, page 5) remain constant throughout the year.

b. Energy demand in all sectors will grow at an average rate of 5.9% per year.

Table IV-2

YEAR	1987	1988	1989	1990	1991	1992	1993	1994
Energy Available								
Hydro (GWH)	2,149	2,149	2,149	2,441(3)	2,441	2,873(5)	2,873	2,873
Thermal (GWH)	870	1,130(1)	1,494(2)	1,653(4)	1,653	1,653	1,653	1,653
Imported (GWH)	138	138	138	138	138	138	138	138
Losses 18% (GWH)	(568)	(615)	(681)	(762)	(762)	(840)	(840)	(840)
Total (A)	2,589	2,802	3,100	3,470	3,470	3,824	3,824	3,824
Energy Requirements								
Government (GWH)	374	396	419	444	470	498	528	559
Commercial (GWH)	909	963	1,019	1,080	1,143	1,211	1,282	1,358
Industrial (GWH)	611	647	685	726	769	814	862	913
Residential (GWH)	823	872	923	977	1,035	1,096	1,161	1,229
Total (B)	2,717	2,878	3,046	3,227	3,417	3,619	3,833	4,059
Shortfall (-) or Surplus (+)								
(A) - (B) (GWH)	-128	-76	54	243	53	205	-9	-235

(1) Assume both Las Minas No. 1 (180 GWH), and Pielstick No. 1 (25 GWH) rehabilitated and operational by January 1988, and two new 30 MW gas turbines installed and operational by May 1988 (55 GWH).

(2) Assume the two 30 MW gas turbines installed in May 1988 are operational throughout 1989 (94 GW), Las Minas No. 2 (300 GWH) and Pielstick No. 2 (25 GWH) rehabilitated and operational by January 1989.

(3) Assume second stage Fortuna Project completed by January of 1990 (292 GWH).

(4) Assume combined cycle added at Las Minas (31 GWH), Las Minas No. 3 and No. 4 restored to nameplate rating (128 GWH), by January 1990.

(5) Assume addition of Esti-Barrigon or a similarly sized hydroelectric power station (432 GWH) by January 1992.

F. THERMAL STATIONS VISITED

From visits to some of the thermal stations, it appears that maintenance program is not a high priority. Presently, IRHE's annual maintenance budget must be approved by the Government's Economic Cabinet, even though the available fund is generated within IRHE. In the past, requested maintenance budgets for the different stations have often been drastically cut down so that the necessary spare parts could not all be purchased, and consequently the required maintenance work could not be carried out. In fact the inventory of spare parts in many stations has been depleted steadily.

1. Las Minas Generating Station

This station has four steam electric generating units. These units burn Bunker C heavy fuel oil piped in from the Texaco refinery at Las Minas. At present, Units 1 and 2 are down. Units 3 and 4 are operating at reduced capacity. Some of the problems are as follows:

a. Oil tank roofs need to be repaired. (Contract to repair and paint the tanks recently awarded).

b. No forced draft fan for Unit 1 (the fan destroyed itself four months ago). Order will be placed soon for a new fan. Bids are being evaluated at this moment.

c. The six burners for Unit 2 are missing. The Italian company which manufactured the burners has gone out of business. The condenser and the circulating water pipes are rusting. Circulating water valves are missing. Cable trench is submerged in water. Pneumatic instrumentations are needed and not yet acquired. Long delay in purchasing has been experienced. Not enough funds are available.

d. No scheduled maintenance of generating units since 1983. Units 3 & 4 have a high probability of being shut down due to forced outage.

2. San Francisco Generating Station

This station has three steam electric generating units, one G. E. gas turbine generator, and four Pielstick diesel generators. The steam units and the diesels burn Bunker C heavy fuel oil. The gas turbine burns No. 2 fuel oil. Some of the problems are as follows:

F. THERMAL STATIONS VISITED (Continued)

a. Steam Units 1 and 2 are inoperative. There is no plan to restore them.

b. Steam Unit 3 is operating at reduced capacity.

c. Unit 4, G. E. gas turbine, has been down since 1982. To bring it back into service would require at least 1.5 million dollars. Presently fund available is short by $300,000.

d. Pielstick diesel Units 1 and 2 are down. They need many spare parts which are not available. Presently parts have been taken from Pielstick diesel Units 1 and 2 for use on Pielstick diesel Units 3 and 4.

e. Pielstick diesel Units 3 and 4 have been operating at reduced capacity due to exhaust valve overheating at high load.

3. Panama Gas Turbine Station

This station has two Hitachi gas turbine generators of General Electric Company design. These units are used for peaking and burn No. 2 fuel oil. Because of high ambient temperature, the units could not deliver the rated capacity.

4. Capira Diesel Generating Station

This station has six diesel generators of which four were built by General Motors and two by a Japanese manufacturer. Of the six units, only two are operational. Again, the problems are the lack of spare parts and funds.

If funds are made available, it is possible to bring the Las Minas and the San Francisco units back into service on schedule, but a special effort would be required. Drastic short cuts would be necessary in the funding and procurement procedures, since at present it takes up to a year to get funds approved and procurement up to another year. Such short cuts may not be achievable.

G. HYDROELECTRIC STATIONS VISITED

In general, the hydroelectric generating stations visited are in much better conditions compared to those of the thermal stations. Scheduled maintenance has been kept up. Detailed maintenance procedures and responsibilities are clearly stated in writing and charts, and are apparently well implemented.

G. HYDROELECTRIC STATIONS VISITED (Continued)

1. Bayano Hydroelectric Station

Bayano hydroelectric station was built in 1976. The impounded water has an energy storage capacity of 500 GWH if high water level can be achieved before the dry season. The power house was designed to house four 75 MW turbine generators. However, only two were installed, with a total capacity of 150 MW. The generators are air cooled, with twelve water-to-air cooling coils provided per generator. Presently, ten of the total twenty four cooling coils are defective, and there is no spare available. To prevent overheating of the generator windings, the capacity of each generator is derated to 68 MW, but the generators are still running hot. Discussion with local personnel revealed that with the present procurement procedures, it will take one and a half years to purchase the required cooling coils. Also, because of decaying vegetation, the reservoir water contains sulfur which causes corrosion of the turbine blades and casings. The plant management plans to take these units down for maintenance as soon as the wet season provides sufficient water for increase in generation in other hydro units. The time required for scheduled maintenance is estimated to be about five weeks per unit.

2. Fortuna Hydroelectric Station

Technical and economic studies made for the Fortuna Project by IRHE recommended that the rock fill dam be built in two stages. Stage I, completed in 1984, consists of a 60 meter high dam with an operating water level 1,010 meters above sea level, which impounds a useful storage capacity of 8.4 million cubic meters. Planned Stage II consists of raising the dam by 40 meters to an operating water level of 1,050 meters, enlarging the storage capacity to 170.5 million cubic meters.

Fortuna Station has three turbine generators, with a total rated capacity of 300 MW. The small reservoir behind the dam presently holds only 4 days storage for 300 MW of generation. Due to low flow in the river upstream, the average generation is maintained below 150 MW to assure sustained operation. This station has a modern control center located on a hill outside the power house. The control center has the latest type of energy control and display equipment.

G. HYDROELECTRIC STATIONS VISITED (Continued)

3. Los Valles and La Estrella Stations

Both Los Valles and La Estrella are run of river type stations with practically no storage capacity. They can generate electric power only when there is sufficient flow in the river. Each plant has two turbine generators. During the visit, only one generator was operating in each plant because of the lack of water flow.

H. IRHE TRANSMISSION SYSTEM

1. Background

The Panama transmission system consists of four voltage levels, 230 kV, 115 kV, 44 kV and 34 kV.

The 230 kV system includes a double circuit line running from Bayano Hydroelectric Station to Panama Substation. This line was constructed in 1976 and has sufficient excess capacity for future development at Bayano. A second 230 kV double circuit line was constructed in 1979, extending from Mata de Nance Substation to Panama Substation via Llano Sanchez Substation, to transmit energy generated by the hydro stations at Los Valles and La Estrella. In 1984, the line from Mata de Nance was further extended to Fortuna to complete an integrated national 230 kV grid. (See Figure IV-2.)

In 1984 a 230 kV interconnection was completed between the Progreso Substation in Panama and Rio Claro Substation in Costa Rica which provides a power transfer link between the two countries.

The 115 kV transmission system consists of a four circuit line from Las Minas Thermal Station to Panama Substation and to secondary substations for final distribution at a voltage level of 13.8 kV.

The system also contains a small amount of 44 kV and 34 kV transmission lines for rural distribution. These lines are located in Mata de Nance, Llano Sanchez & Chorrera. In the main, these lines were inherited from local supply companies taken over by IRHE.

2. Shortcomings of Existing System

Expansion of hydroelectric power has occurred in Chiriqui Province while the main load center remained in Panama City. Presently the 230 kV double circuit line between Mata de Nance

CENTRAL AMERICA ELECTRICAL SYSTEM INTERCONNECTION

H. IRHE TRANSMISSION SYSTEM (Continued)

and Panama City is fully loaded and, at peak periods, restricts the transmission of imported energy from Costa Rica. All other parts of the transmission network appear to be adequately sized for today's system and for the proposed near term system expansion.

3. Future Development

In view of the present and the proposed hydroelectric generating capacity in Chiriqui Province and Bocas Del Toro Province, and the continued development of the interconnection with Central America, consideration should be given to a future 500 kV transmission system to provide adequate transmission capacity well into the 21st century.

I. CENTRAL AMERICAN INTERCONNECTION

In March 1986, Panama joined the Central American Interconnected System of Honduras, Nicaragua, and Costa Rica. Since that time it has been exchanging small quantities of electricity with Costa Rica. An agreement has been reached with Costa Rica to allow storage of excess electricity from Panama in the form of water in the Costa Rican hydro system, to be returned when needed in energy and capacity.

The voltage of the interconnected system is 230 kV, except for the lines interconnecting La Caja to Rio Macho in Costa Rica, which are 138 kV (Figure IV-3). The lower voltage restricts transmission to Panama to only 50 MW. This restriction should be eliminated as soon as possible since Honduras has substantial surplus energy from its El Cajon Hydroelectric Station at a production cost of only 2.5 cents per kWH. (The delivered cost to Panama is estimated to be about 6 cents per kWh). It is projected that this surplus will continue to exist until 1990. A market for the surplus would be valuable to Honduras as well as to Panama to alleviate the anticipated deficiency during this period. For the near term, the La Caja-Rio Macho bottleneck can be partially solved by adding 100 MVA of transformer capability at La Caja at a cost estimated by ICE of about $2 million. For the long term, the 138 kV LaCaja-Rio Macho intertie should be upgraded or a 230 kV overlay should be added.

J. SYSTEM LOAD PROFILE & POTENTIAL FOR PEAK SHAVING

1. Panamanian System

A 24 hour load profile was developed from information given in IRHE "Suministiro De Energia" (Supply of Energy), Appendix 1, page 6 (Figure IV-4).

FIGURE IV-3

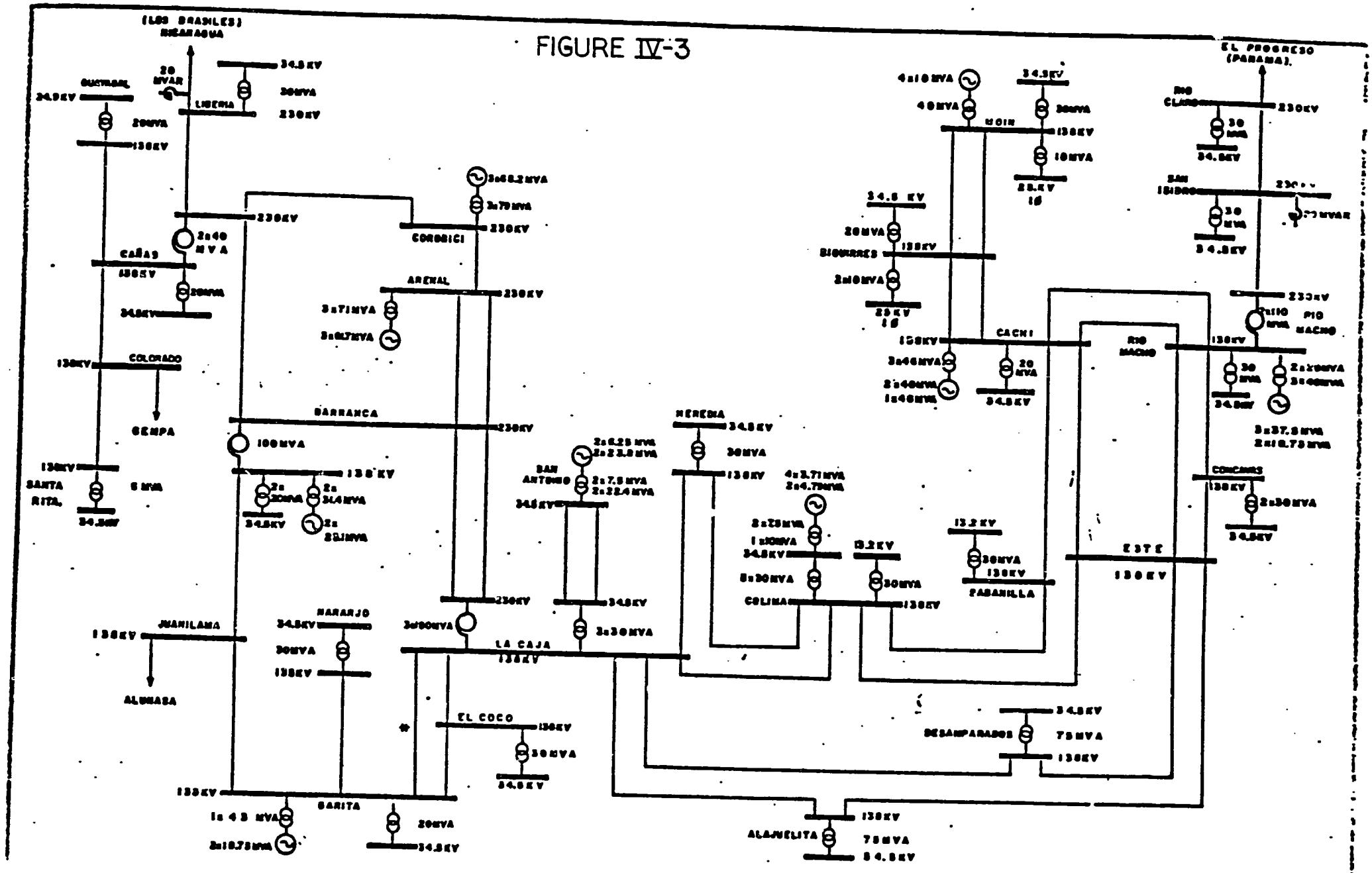

138 & 230KV TRANSMISSION LINES
PLANTS & SUBSTATIONS OF I.C.E.

* OBRA O SUBESTACION PROXIMA A ENTRAR EN SERVICIO.

JULIO. .66

FIGURE IV-4

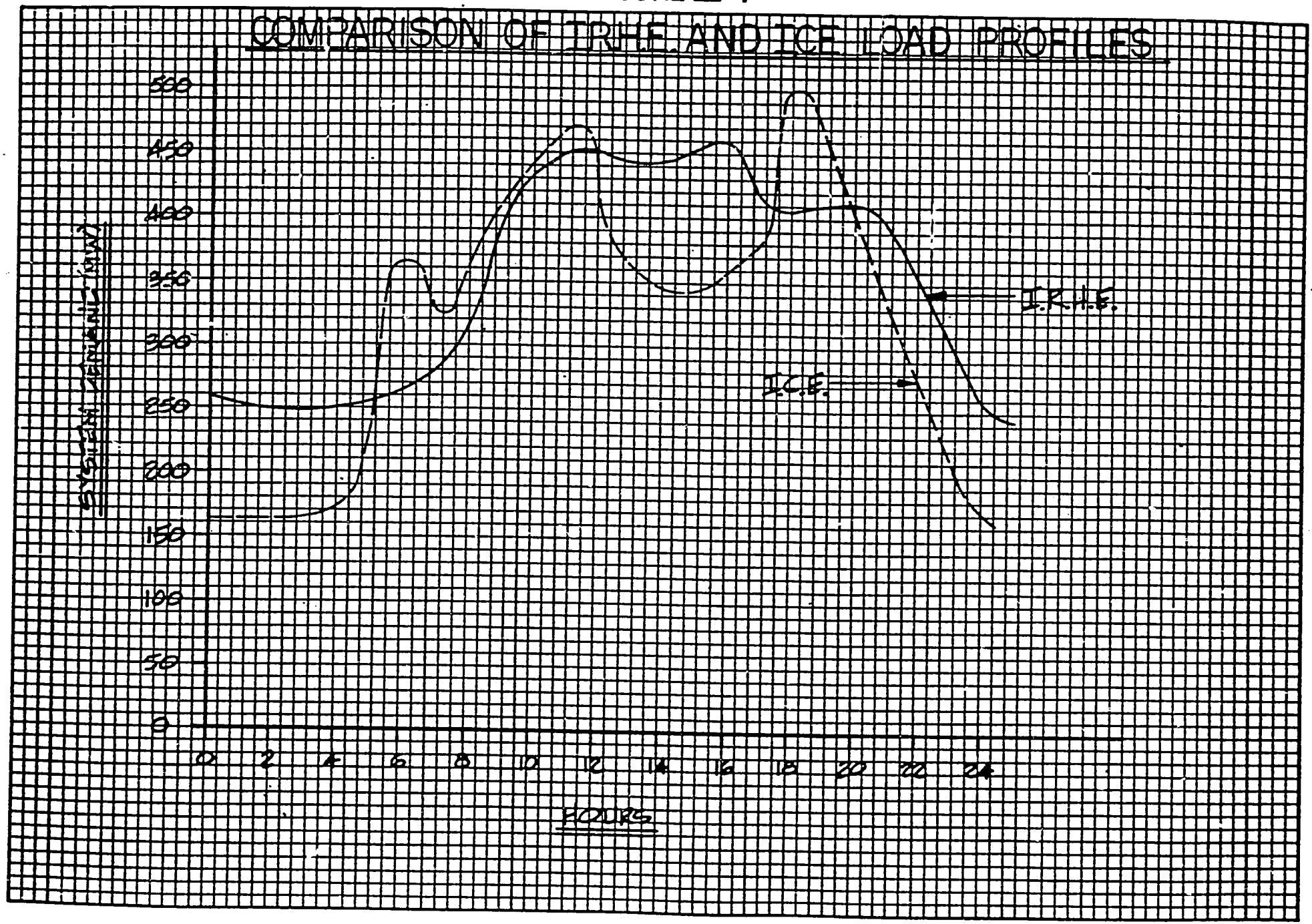
COMPARISON OF TRHE AND ICE LOAD PROFILES
SYSTEM DEMAND (MW)
500
450
400
350
300
250
200
150
100
50
0
0
2
4
6
8
10
12
14
16
18
20
22
24
HOURS
I.R.H.E.
I.C.E.

J. SYSTEM LOAD PROFILE & POTENTIAL FOR PEAK SHAVING (Continued)

The developed load profile can be considered almost constant throughout the year. The largest contribution to the system load is air conditioning and this is relatively constant since outdoor temperature in Panama remains fairly stable year 'round.

Both in the dry and the wet seasons, the daily peak load occurs between 1:00 PM and 4:00 PM due primarily to air conditioning. The peak load drops off fairly rapidly from 6:00 PM through midnight, and remains relatively constant from midnight to 6:00 AM.

Peak load:	463 MW (3:00 PM)
Minimum load:	200 MW (Midnight-4:00 AM)
Load Factor:	67%

2. Costa Rican System

The Costa Rican load profile (also shown in Figure IV-4) was developed from information obtained from ICE. Although the acquired information is based on hydro generation and cannot be used to obtain absolute values of load conditions, it is believed that the profile is valid with respect to the timing and duration of maximum and minimum demands.

Unlike the Panamanian load demands which are based on air conditioning loads, the Costa Rican load demands are based on cooking loads, with the peaks occuring at main meal times: breakfast (6:00 AM), lunch (11:00 AM-12:00 noon), and dinner (6:00 PM-7:00 PM). A trough in the daily demand occurs between 12:00 noon and 5:00 PM when the load reduces to approximately 70% of the maximum daily demand.

3. Capacity Conservation

From the 24 hour load profile developed for the Panamanian system, it can be seen that a form of conservation could be achieved during the dry season by reducing hydro generation during the night, storing the water, and hence creating additional available hydro capacity for the peak period. This approach could be taken one step further by utilizing the ICE water storage agreement and exporting power from IRHE at night to be returned to the IRHE system during the peak period. This strategy, although beneficial in closing the gap between demand and available capacity, is accomplished at the expense of additional oil consumption using thermal generation during the night.

J. SYSTEM LOAD PROFILE & POTENTIAL FOR PEAK SHAVING (Continued)

4. Peak Shaving

Comparing the 24 hour load profiles of the IRHE and ICE systems, it can be seen that the peak demands of the systems are not coincidental, leading to a potential scenario for peak-shaving with improvement of the load factor for both the IRHE and ICE systems. Based on the information thus far obtained, the present IRHE dry season shortfall condition could be minimized. Before any firm conclusions can be arrived at, a full study of both system load conditions would be necessary. The operation of a peak shaving exercise would require the full cooperation and participation of both countries.

K. BUDGET RESTRAINTS

For the 15 years from 1970 to 1984 Panama's balance of payments has shown a deficit every year except for 1976, 1978 and 1980. This situation, combined with huge amount of the outstanding national debt, had led the Government to postpone development of large scale hydroelectric projects.

Within the framework of the agreements with the IMF and the World Bank, the Government of Panama undertook to reduce the budget deficit to 1.2 percent of the GNP for the year 1986. To finance the deficit, the government has been using the Budget Act to impose specific liabilities, or profit sharing, on government owned companies that are in a better financial position to provide for the national budget. In the case of IRHE, the required contributions to the central government amounted to $6.2 million in 1984 and $6.5 million in 1985, accounting for 9.4 percent and 17.4 percent, respectively, of the IRHE net income in those two years. For the same purpose, the 1986 budget called for $10.4 million, and for 1987 the proposed amount is $12.0 million. In addition to profit sharing, IRHE is presently paying 35 percent tax on all the equipment it purchases.

At the end of December 1984, overdue payments to IRHE from municipalities and autonomous agencies for electricity consumption reached $20.7 million. During January 1985 these agencies settled approximately $8 million of their arrears. Payment for the balance would be made according to an agreed schedule. Arrears of autonomous agencies would be paid over two years and those of municipalities, over five years.

46

K. BUDGET RESTRAINTS (Continued)

Estimates of IRHE's future accounts receivable are quite high ranging from $62 million in 1987 to $67.8 million in 1990. In 1986, the Government of Panama owed IRHE $40 million, IDAAN $12 million and the International Airport $4 million. If these accounts are paid up, IRHE's liquidity problems and its need for outside financing would be greatly reduced.

L. IRHE EXPANSION PROGRAM

The IRHE expansion program now in force calls for the installation of two gas turbine generators rated at 30 MW each by the middle of 1988, for raising the height of the Fortuna Dam in 1990, for installation in 1990 of a combined cycle power station (using the two gas turbines mentioned earlier), for installation of a coal fired power station rated at 150 MW in 1995, and for placing in operation of the 88 MW Esti-Barrigon Hydroelectric Station in 1992, the 300 MW Changuinola I Hydroelectric Station in 1998, and the 306 MW Changuinola II Hydroelectric Station in 2002.

If IRHE is to implement all of its programs on schedule, it will require an estimated funding of $75.5 million in 1987, $101.6 million in 1988, $110.9 million in 1989 and $129.5 million in 1990.

M. THE SECOND STAGE FORTUNA PROJECT

Construction of the second stage Fortuna Project as early as possible represents a low cost solution for assistance in meeting IRHE's power demand growth up to 1990. Moreover, safety of the lower dam under maximum flood conditions demands raising the height as soon as possible. The reservoir spillway for Stage I has been designed for a flood of only 2,325 cubic meters per second (probability of occurrence 1 in 55 years). This probability represents a relatively high risk which will disappear when the spillway for Stage II is constructed, providing that the design incorporates a spillway capacity for the maximum probable flood of 5,300 cubic meter per second which is considered a safe design in accordance with international engineering practice.

The generation attributed to the Fortuna Project, calculated for combined operation with the storage provided by IRHE's Bayano Station, is as follows:

	Total Generation in GWh per Year	
	Fortuna I	Fortuna I and II
Firm Energy (dry year condition)	846	1,390
Average Energy (average hydrology)	1,242	1,489

M. THE SECOND STAGE FORTUNA PROJECT (Continued)

Presently, a loan from the World Bank for the second stage project has been approved. Bids for the construction work are in hand. Due to some problems with the low bidder taking exceptions and the added construction cost of approximately $7 million, the award of the contract has been held up. Based on discussions with the IRHE personnel, the work may have to be rebid. If rebid is required, there will be at least one year delay for the project. In any event, it is unlikely that the 1990 completion date can be met.

N. NEW 60 MW GAS TURBINE PLANT

The cost of the proposed new gas turbine plant, to be located at Las Minas, was estimated to be about $350 per kW, not including the supporting systems such as foundations, No. 2 oil storage, pipeline, pumping equipment, etc. The units most likely to be installed are two G. E. Frame 6 gas turbine generators rated at 30 MW each. The approximate cost for the whole plant was estimated to be about 25 million dollars. According to IRHE personnel, GE promised that the plant could be put in operation within one year. IRHE also said that the manufacturer is willing to provide financing. However, whether the incurring of new debt through vendor financing of the gas turbines is acceptable to the World Bank is not known at this time.

O. PROPOSED FUTURE COAL FIRED STATION

The proposed coal fired station includes two 75 MW units to be built on Telfers Island, at Cristobal Port near Colon. A feasibility study of this station has been completed by Japan International Cooperation Agency (JICA). According to JICA, the proposed project is the most economical and profitable among various alternatives. JICA proposed that the two units be placed in commercial operation in October 1992 and January 1993 respectively.

It was proposed that coal be brought in from the Carrejon Mine in Colombia, which has proven coal reserves of 2.6 billion tons. The port of shipment in Colombia is Puerto Bolivar. The Carrejon Mine has a plan to increase annual production from 9.0 million tons in 1987 to 15.0 million tons in 1989 onward. The estimated coal consumption of the Telfers Island station is 300 thousand tons per year, which can be secured through a long term contract with Carrejon Coal Mine. The coal has a calorific value of 6,600 Kcal/kg, 5.2% surface moisture, and 1% sulfur. The proximate analysis is as follows:

O. PROPOSED FUTURE COAL FIRED STATIONS (Continued)

Inherent moisture	4%
Ash	13%
Volatile	35%
Fixed Carbon	48%

The constructed cost of the station was estimated to be $222 million. The cost of the transmission line and switchyard was estimated to be $23 million. The unit generation cost was estimated to be 5.2 cents per kWh.

When completed, this station will be based loaded, with an estimated annual generation of 900 Gwh gross, and 836 Gwh net.

P. PROPOSED FUTURE HYDROELECTRIC STATIONS

The main source of indigenous energy identified in Panama is hydroelectric energy. Investigations conducted by IRHE have identified some 30 potential hydroelectric sites with a total estimated capacity of 7,200 MW and an annual energy output of some 40,400 GWH. The identified hydroelectric sites are located in four provinces; Bocas del Toro (Rio Teribe and Rio Changuinola), Chiriqui, Veraguas and Darien. Of these 30 sites, ten are considered feasible for development, with a total potential generating capacity of 2,500 MW and an annual generating capability of some 10,000 GWH.

As of the beginning of 1987, IRHE's total hydroelectric installed capacity was only 550 MW, or approximately 22% of the total feasible hydroelectric resource. However, due to the extremely large capital investment necessary for hydroelectric development, IRHE considers that future large scale hydroelectric projects should be postponed until the late 1990's, with the exception of Esti Barrigon (or similar size project) now scheduled for completion in 1992.

Q. FUEL PRICE PROJECTION

Panama imports crude oil which is processed in the Texaco Refinery located in Las Minas, near the City of Colon. The refinery has an installed capacity of 100,000 barrels per day, principally for producing derivatives for export and using the rest to meet the needs of Panama. The efficiency and economy of the refinery have been affected by the production of other larger refineries in the

Q. FUEL PRICE PROJECTION (Continued)

Caribbean area, which benefit from economies of scale. Because of competition, the refinery has had to cut its production to about 40,000 barrels per day, about half of which is intended to meet the needs of Panama and the rest for export. As a result, unit costs have risen.

Currently, the prices of fuels paid by IRHE at the Las Minas Texaco Refinery are as follows:

Type of Fuel	Type of Plant	Price, $/bbl.
Bunker C	Oil fired steam plant	15.4 + 3.15 tax
Bunker C	Pielstick diesels	15.4 + 3.15 tax
Marine diesel	Small diesel engines	31. + --- tax
No. 2 oil	Gas turbine & diesel starting	42. + 0.84 tax

The master plan "Plan Maestro de Expansion, Abril 1986" was based on the assumption that these prices will not escalate for the next eight years. For the proposed new coal fired plant near Colon, the projected coal price for the years 1992-1995 will be around $53. a ton, based on a high heating value of 6,600 Kcal/kg.

The above prices for fuel are much higher than those taken from the World Bank Commodity Price Projection of August 8, 1986.(1)

Year	Bunker C $/bbl.	Diesel Oil $/bbl.	Coal $/ton
1989	13	18	39
1990	13	18	40
1995	15	21	42

The difference in current prices paid by IRHE is a form of subsidy to the Government of Panama.

(1) Petroleum, average OPEC price.

Coal, (12,000 Btu/lb., 1 percent sulfur, 12 percent ash), F.O.B. Piers, Hampton Road, Norfolk, Virginia.

R. TARIFF PROJECTION

Based on data from IRHE dated January 2, 1987, the projected GWH sales, the corresponding revenues, and the calculated average prices of electricity for the next eight years are as follows.

Year	GWH	10^6 $	c/KWhr
1988	2,396.	285	11.9
1989	2,520.	303.	12.0
1990	2,651	292.	11.0
1991	2,804	312.	11.1
1992	2,966	336.	11.3
1993	3,140	364.	11.6
1994	3,326	374.	11.2
1995	3,526	402.	11.4

The revenues shown above include the fuel oil surcharge and were based on the assumption that the fuel price will not escalate for the next eight years. Other assumptions made were that the Fortuna and the gas turbine projects will be completed on time, and that the Las Minas units will be restored on schedule. With more thermal capacity to be placed on stream, the fuel oil surcharge will tend to go up. Even without an oil price increase by OPEC, there is no measure in sight that could bring down the price of electricity.

S. NEARTERM ASSESMENT

For the next three to five years there will be a serious power shortage for the IRHE system because of the financing problems, and the difficult time schedules available for restoration of existing units and installing of the proposed new 60 MW gas turbine plant and Fortuna Stage II. Additional power from the Central American Interconnected System would alleviate the situation, but again the mechanics of working out financing and the time required to implement a program seems to pose substantial problems for the nearterm. Brownouts can be expected during the next dry season, and may become a regular annual occurrence until adequate new capacity can be financed and constructed.

During the coming year, every effort should be made to increase electricity purchase from Honduras and Costa Rica to conserve water storage at Bayano and thus permit additional generation during the next dry season. A crash study should be initiated to optimize removal of bottlenecks in the Costa Rican system, and agreement should be obtained (if possible) from an international financing agency to make funds available jointly to Costa Rica and Panama (and perhaps Honduras) for this purpose.

51

T. LONGTERM ASSESSMENT

Development of hydroelectric projects relieves the country from heavy dependence on imported oil. However, hydro projects require a very large investment to be financed locally and from abroad. Also long lead time for planning, engineering, and construction is needed.

During the dry seasons, the available capacity of the hydroelectric stations is greatly reduced due to the low water flow and diminished water storage. Thus a certain percentage of the electric generating capacity must still be supplied from thermal generating stations. The thermal stations not only provide backup power during the dry seasons, but also allow regulation and conservation of the hydroelectric capacity. Depending on the availability of financing, it appears that medium capacity hydro projects (100-300 MW), together with some coal fired units, are better suited to meet the IRHE long term load growth given the scarcity of fossil fuel resources in Panama.

U. RECOMMENDATIONS AND CONCLUSIONS

In an effort to alleviate the immediate shortfall of electrical power and to develop at least a 15% reserve margin of generating capacity over the next seven (7) years, the following areas should be examined and where applicable implemented.

1. Energy Conservation. IRHE should actively pursue a policy to encourage its customers to conserve energy by:

   a. Applying a penalty to customers who exceed an upper limit of energy consumption during the dry season, (i.e., an incentive to reduce air conditioning use).

   b. Widely advertising the need for energy conservation to encourage consumers to cut back on demand during the daily periods of 12 noon through 4 PM.

   c. Modifying the working day in such a way that the 12 noon to 4 PM peak load is reduced.

2. Immediate Funding. Immediate funding should be made available for repair work and the purchase of spare parts, to insure that Las Minas Unit No. 1 and San Francisco's Pielstick Unit No. 1 are brought back on line by January 1988. This may prove to be a difficult schedule if funding is delayed and/or implementation is not undertaken with all possible speed.

61

U. RECOMMENDATIONS AND CONCLUSIONS (Continued)

Further funding should be made available for repair and purchase of spare parts during 1987-88 to ensure that the Las Minas No. 2 and Pielstick No. 2 are brought back on line by January 1989.

3. Fortuna Stage II. Expedite the construction of the second stage Fortuna Project and have the upgraded plant operational by 1990. If this work is not completed on schedule, demand will very likely outstrip available capacity during 1990 and a crisis similar to that recently experienced will again occur.

4. Gas Turbine Project. IRHE proposes to install two 30 megawatt gas turbine generators for commercial operation during mid-1988. The addition of these units will increase the available capacity of the IRHE system for the 1989 dry season and provide additional flexibility to allow greater hydroelectric storage during off peak periods. If financing can be arranged, this project should proceed with all possible speed.

5. Transmission System-Short Term. Upgrade the interconnected system with Costa Rica by increasing the transformer capacity at La Caja Substation in Costa Rica.

This upgrade would increase the imported capacity from Costa Rica from 50 MW to approximately 90 MW (The source of this imported capacity is mainly Honduran hydro generation. The interconnection links the countries of Honduras, Nicaragua, Costa Rica and Panama). The increase in transformer capacity would also benefit the Costa Ricans, since it would reinforce their existing 138 kV system which is presently fully loaded and contains very little reserve transformer capacity. Because both parties would benefit from the additional transformer capacity, it could and should be jointly funded by IRHE and ICE Costa Rica.

It is recommended that a crash program be initiated to implement the transformer upgrade program in Costa Rica and that immediate financing be arranged with USAID or other international lending agency to support the program. Both Panama and Costa Rica should participate in the loan.

6. Load Shedding. Develop a plan and operational procedure for an orderly backup load shedding program. This plan should be developed by IRHE with representatives of government, industry and commerce. The plan should incorporate a procedure to sequence area brownouts (or blackouts) in an equitable manner.

U. RECOMMENDATIONS AND CONCLUSION (Continued)

7. Peak Shaving. Develop in conjunction with ICE a procedure for peak shaving of both the IRHE and the ICE systems. This could be accomplished by more fully utilizing the existing interconnection between the two systems and taking advantage of the different characteristics of the load profiles of both systems.

8. Allocation of Thermal and Hydro Resources. Maximize the use of thermal generation during the off peak periods of the dry season to build up water storage for use during peak periods. This will increase fuel costs but would be a constructive plan to avoid (or postpone) load shedding.

9. Intermediate and Longterm Development-Generation. In considering future intermediate and longterm development of the IRHE generating systems, the following observations are made. At least one new coal fired generating station should be considered for the system, although the major portion of new capacity should be medium size hydroelectric plants (i.e. 100-300 MW) since only 22 percent of the country total feasible potentials in hydro power has been developed so far. The proposed coal plant would be used to meet shortage of hydro capacity during the dry seasons, allow better regulation and energy conservation of the hydroelectric plants and provide the needed reserve margin for the power system at a lesser fuel cost than currently used residual oil. For the two 75 MW coal units tentatively scheduled for operation in 1995, the main source of coal supply presently anticipated will be the Cerrejon coal mine in Columbia. An investigation on this subject concluded that the tentatively scheduled startup for this plant should be brought forward to the last quarter of 1992 or first quarter of 1993 to ensure that the growth demand of the system is satisfied for at least a 3 to 4 year period.

10. Intermediate and Longterm Development-Transmission. The IRHE transmission backbone runs from the west of the country in Chiriqui province to Panama City and from Panama City to Bayano in the east. The transmission line consists of a double circuit operating at a nominal voltage of 230 kV. This backbone is used to transmit power from the hydroelectric generating centers in Chiriqui province and from Bayano to the main load center at Panama City. The backbone is also utilized for the importing and exporting of energy to Costa Rica via the Substations of Progreso in Panama and Rio Clara in Costa Rica.

U. RECOMMENDATIONS AND CONCLUSIONS (Continued)

A weak link exists within this transmission backbone between Mata de Nance in the west and Panama City. This weakness limits the power transmission capability of the existing lines to approximately 300 MW. With the Fortuna hydro plant operating at 300 MW no power can be imported from Costa Rica.

The transmission line between Mata de Nance and Panama City should be reinforced or overlaid with a new 500 kV backbone of sufficient capacity to serve the needs of the IRHE system well into the twenty first century, and to be capable of being integrated into a future proposed Central American Transmission Grid.

Concurrently with the feasibility studies for this program, it is suggested that detailed studies should be carried out for the 138 kV Lc Caja-Rio Macho intertie and any other parts of the Costa Rican bulk power system which may impede substantial power flows among the Honduras, Costa Rican and Panamanian systems. Removing the bottlenecks from the combined Costa Rica-Panama bulk transmission backbone would be a giant step forward in achieving true coordination of the Central Amwrican Interconnected System.

11. Operations. The LDP investigation considered the technical competence and method of operation of the IRHE system. It was concluded that in the main the level of competence is equal to that of most comparably sized U. S. utilities and that the utility is being operated in a professional manner with good engineering practices being followed.

12. Financial. Financial projections presented by IRHE indicate that, in addition to meeting its day-to-day financial obligations, IRHE would be able to generate internally a substantial amount of funds needed for its maintenance and construction programs. However, since IRHE's annual operating and investment budgets must be approved by the central government, the required budgets have in the past been either reduced arbitrarily or have taken a considerable time to be approved. These reductions and delays have resulted in lack of capital funds when required, and lack of spare parts for proper plant maintenance, which has led to the present inadequate generating capacity. To allow IRHE to deal with its maintenance problems, the Panamanian Government should establish some autonomy for IHRE to allocate adequate foreign currency required for plant renovation and maintenance. This policy would cut down the long lead time, usually one year, to obtain the approval of needed funds.

U. RECOMMENDATIONS AND CONCLUSIONS (Continued)

The above financial comments are initial observations. They will be updated by an in depth investigation of the IRHE financial status presently being conducted on behalf of USAID by Stone & Webster Management Consultants Inc.

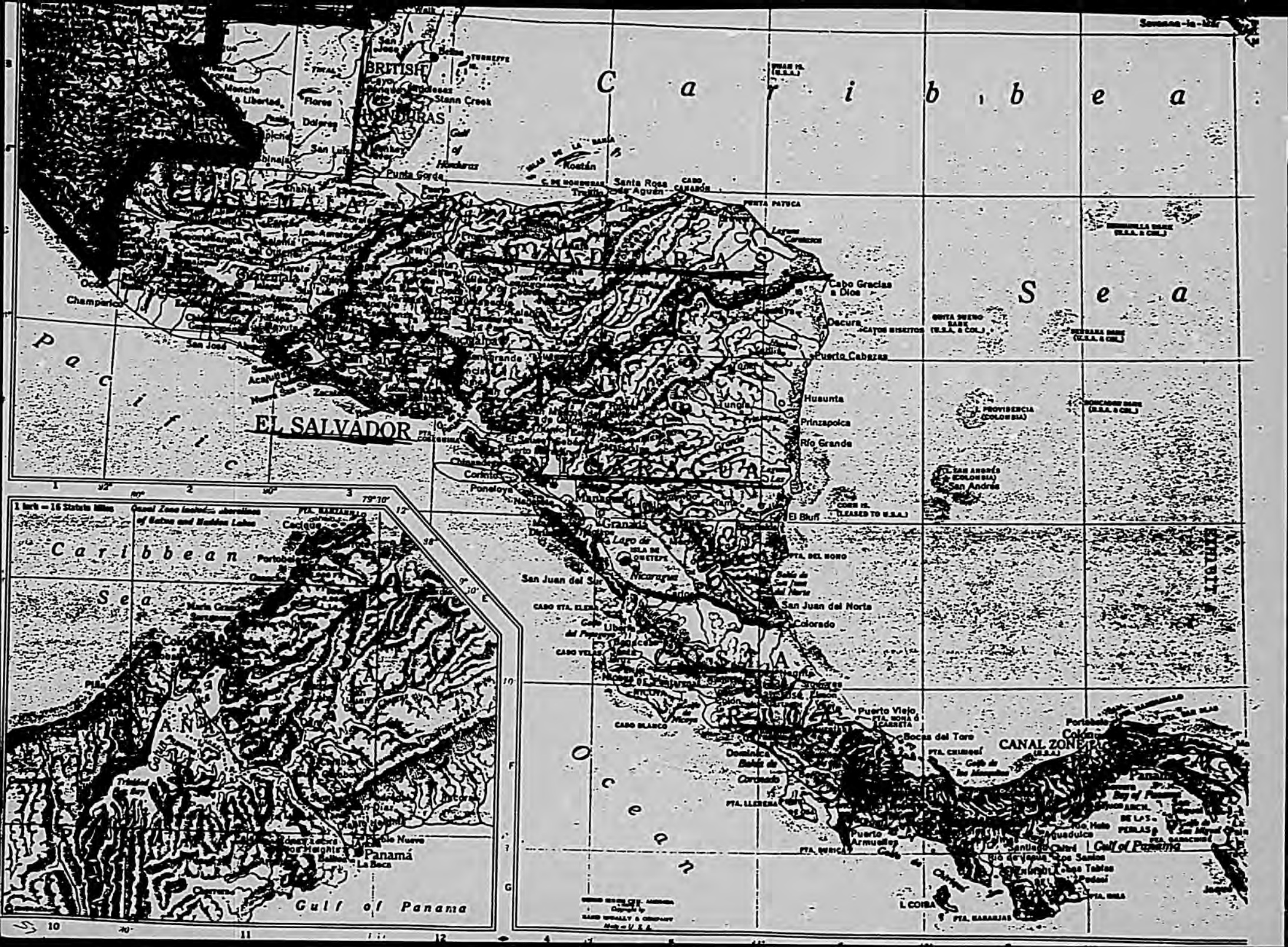
Caribbean Sea
Pacific Ocean
BRITISH HONDURAS
GUATEMALA
EL SALVADOR
NICARAGUA
COSTA RICA
CANAL ZONE
Gulf of Honduras
Roatán
Santa Rosa de Aguán
Trujillo
Cabo Gracias a Dios
Puerto Cabezas
Bluefields
Corinto
Managua
Granada
Lago de Nicaragua
San Juan del Sur
San Juan del Norte
Colorado
Puerto Viejo
Bocas del Toro
Puerto Armuelles
Gulf of Panama
Panamá
Colón
Portobelo
Cacique
Chiriquí
Bay of Panama
Gulf of Panama
1 Inch = 16 Statute Miles
Canal Zone includes adjacent waters of Gatun and Madden Lakes

EXHIBIT B
(Taken from Ref. IIA4)

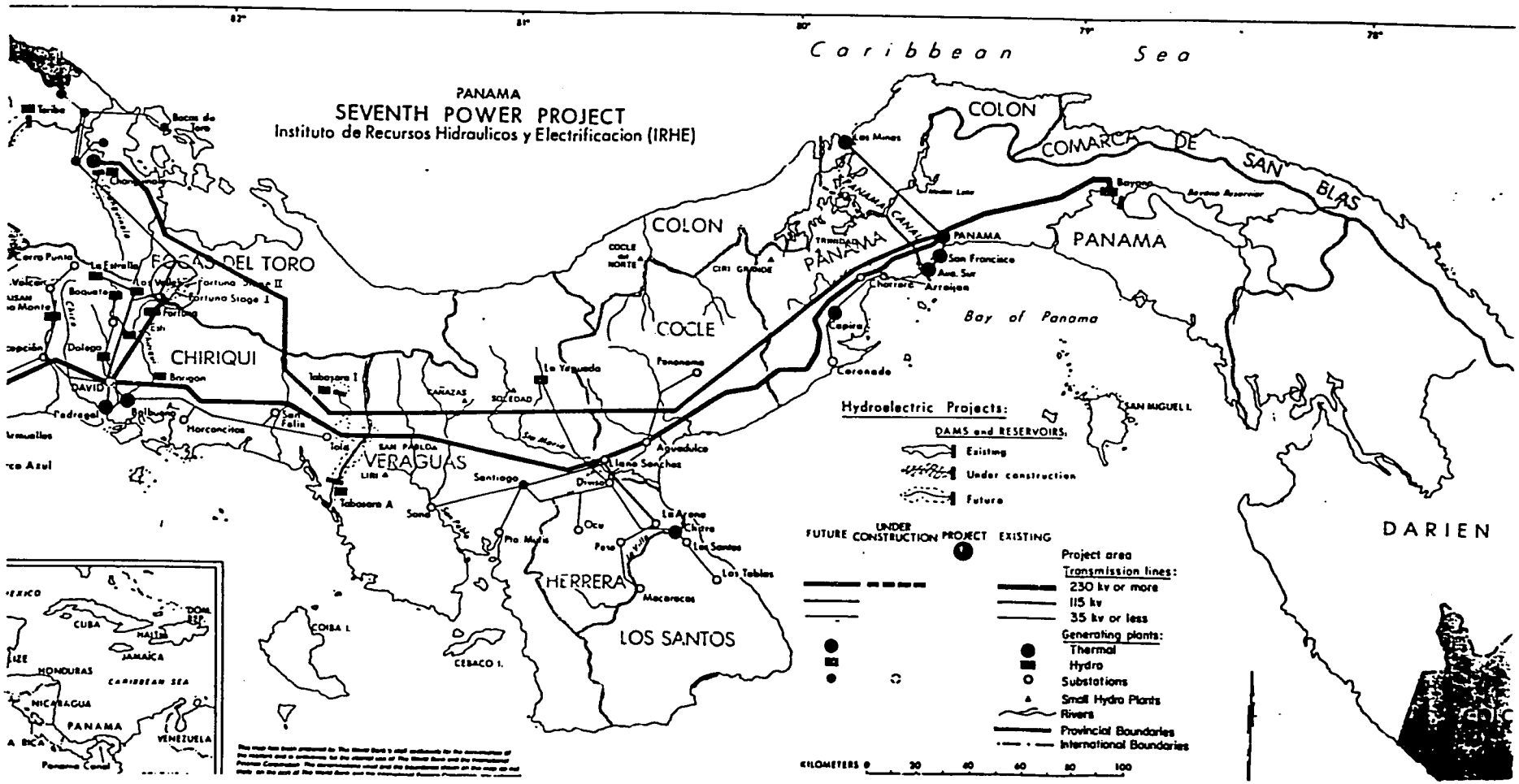

EXHIBIT C
ANNEX 3.1

PANAMA

(Taken from Ref. IIA4)

INSTITUTO DE RECURSOS HIDRAULICOS Y ELECTRIFICACION (IRHE)

SEVENTH POWER PROJECT

Actual and Forecast Sales and Gross Generation - GWh f/

	1982 a/	1983 a/	1984 a/	1985	1986	1987	1988	1989	1990
1. Sales to Customers									
Residential	499.0	527.9	522.2	539.5	566.6	594.9	624.6	655.8	688.0
Commercial	532.0	567.9	572.7	600.8	639.7	681.0	724.8	771.5	820.8
Industrial	218.8	218.0	227.4	244.6	265.0	287.2	311.1	337.0	365.0
Government b/	311.3	337.2	327.5	375.8	408.1	443.0	480.8	521.9	566.1
Street Lighting	34.7	36.8	37.1	40.1	43.0	46.1	49.4	52.8	56.6
Sub-total	1,595.0	1,688.6	1,686.9	1,800.8	1,922.4	2,052.2	2,190.7	2,339.0	2,496.5
2. Block Sales									
ICE (Costa Rica)	3.1	3.1	1.9	3.1	3.1	3.1	3.1	3.1	3.1
Chiriqui Land Company	16.1	16.5	17.0	21.6	34.9	47.2	65.4	65.4	65.4
Impregilo c/	25.9	26.1	8.7	-	-	-	-	-	-
Petroterminales d/	18.6	103.5	86.6	91.3	91.3	195.0	195.0	195.0	195.0
Canal Commission	3.8	0.1	1.5	12.0	12.0	12.0	12.0	12.0	12.0
Sub-total	67.5	149.3	115.7	128.0	141.3	257.3	275.5	275.5	275.5
3. IRHE's Use e/	10.3	13.8	12.4	13.5	14.2	18.8	20.3	22.6	24.8
4. Total Sales	1,672.8	1 852.7	1,815.0	1,942.3	2,077.9	2,328.3	2,486.5	2,637.1	2,796.8
5. Plant Use	57.5	45.2	48 8	26.0	31.5	27.5	34.3	41.5	41 0
6. System Losses	355.7	342.5	400.2	374.9	352.0	386.7	413.8	439.7	465.8
Required Gross Generation	2,088.0	2,238.3	2,264.0	2,343.2	2,461.4	2,742.5	2,934.6	3,118.3	3,303.6
In Percentage of Gross Generation (%)	17.0	15.3	17.7	16.0	14.3	14.1	14.1	14.1	14.1

a/ Actual data.
b/ Includes municipalities and public companies and services such as Port Authority, International Airport Water Treatment Plants, etc.
c/ Sales to the contractor Impregilo for use in the construction activities of the Fortuna project
d/ Includes sales to Petroterminales for the Caldera oil pumping station, in operation since 1983, and for the Charco Azul station planned for operation in 1987.
e/ For accounting purposes, IRHE's energy use is shown as sales. Does not include plant use.
f/ Includes isolated systems.

February 8, 1985

EXHIBIT D

ANNEX 3.1

(Taken from Ref. IIA4)

PANAMA

INSTITUTO DE RECURSOS HIDRAULICOS Y ELECTRIFICACION (IRHE)

SEVENTH POWER PROJECT

Energy Balance for IRHE's System - GWh 1/

A. Energy Balance	1982 a/	1983 a/	1984 a/	1985	1986	1987	1988	1989	1990	1991	1992	1993
1. Required Gross Generation	2,060	2,230	2,264	2,335	2,433	2,735	2,927	3,109	3,294	3,490	3,698	3,918
2. Available Generation												
2.1 Thermal												
Bahia Las Minas c/	901	863	943	934	924	915	906	897	888	879	870	861
San Francisco	73	146	246	246	246	178 b/	178	146 b/	146	146	146	146
Avenida Sur	0	0	28	- b/	-	-	-	-	-	-	-	-
Diesel Central Provinces	8	73	71	71	71	71	71	71	71	71	71	71
Diesel West Panama	6	20	34	34	34	34	34	34	34	34	34	34
Diesel Chiriqui	16	67	95	95	95	95	95	95	95	95	95	95
Gas Turbines	2	195 i/	95	95	95	95	95	95	95	95	95	95
Other Future Thermal j/	—	—	—	—	—	—	—	—	—	—	—	1,031
Sub-Total Thermal	1,006	1,364	1,512	1,475	1,465	1,388	1,379	1,338	1,329	1,320	1,311	2,353
2.2 Hydro (Average Hydrology) f/												
Teguada	33	24	35	35	35	35	35	35	35	35	35	35
Chiriqui Hydro	13	16	21	21	21	21	21	21	21	21	21	21
Bayano	393	422	606	606	606	606	606	606	606 d/	606	606	606
Estrella Los Valles	435	404	509	509	509	509	509	509	509	509	509	509
Fortuna I and II	-	-	690	1,242	1,242	1,242	1,242	1,489 e/	1,489	1,489	1,489	1,489
Other Future Hydro h/	-	-	-	-	-	-	-	-	209 h/	617	617	617
Sub-Total Hydrology (Average)	-	-	1,861	2,413	2,413	2,413	2,413	2,660	2,869	3,277	3,277	3,277
Sub-Total Hydrology (Firm) g/	1,074	866	1,741	1,741	1,741	1,741	1,741	2,306	2,515	2,776	2,776	2,776
2.3 Total Available Generation												
Average	-	-	3,373	3,888	3,878	3,801	3,792	3,998	4,198	4,397	4,588	5,630
Firm	2,080	2,230	3,253	3,216	3,206	3,129	3,120	3,644	3,844	4,096	4,087	5,129
3. Firm Reserve												
Reserve in GWh	-	-	-	881	753	394	193	535	550	606	389	1,211
Reserve in % of Gross Generation	-	-	-	38	31	14	7	17	17	17	11	31
B. Generation Dispatch k/												
Thermal Generation	1,006	1,364	712	72	195	322	514	449	425	313	421	641
Hydro-Generation	1,074	866	1,552	2,263	2,238	2,413	2,413	2,660	2,869	3,277	3,277	3,277
Total Dispatch	2,080	2,230	2,264	2,335	2,433	2,735	2,927	3,109	3,294	3,490	3,698	3,918

a/ Actual data
b/ Retirement of old equipment
c/ Output decreases yearly due to aging of equipment (1% per year)
d/ Installation of a new 75 MW unit at Bayano for peaking purposes only. No additional generation is involved.
e/ Raise of the Fortuna dam
f/ Hydro energy for average hydrological year (about 9 out of 10 years)
g/ Hydro energy determined for the combined operation of all hydro plants in a dry year (about 1 out of 10 years)
h/ Possibl the Esti-Barrigon hydroelectric project (feasibility studies completed)
i/ Colon coal fired steam plant rated 150 MW.
j/ Does not include isolated systems
k/ Calculated by IRHE using a mathematical load dispatch model, on a month by month basis; the model takes into consideration the probabilities of occurrence of dry, average and wet hydrological conditions.
l/ In 1983 the gas turbines were used as base load plants to compensate for the low hydro-generation. From 1984 onwards they will operate as emergency or peaking units.

February 7, 1983

60

EXHIBIT E

ANNEX 3.3

PANAMA

INSTITUTO DE RECURSOS HIDRAULICOS Y ELECTRIFICACION (IRHE)

(Taken from Ref. IIA4)

SEVENTH POWER PROJECT

Capacity Balance for IRHE's System - MW a/

	1982 f/	1983 f/	1984 f/	1985	1986	1987	1988	1989	1990	1991	1992	1993
1. System Requirements												
Required Gross Generation (Gwh)	2,080	2,230	2,264	2,335	2,453	2,735	2,927	3,109	3,294	3,490	3,696	3,918
Required Net Generation (Gwh) c/	2,022	2,183	2,214	2,309	2,411	2,707	2,893	3,067	3,253	3,440	2,648	3,868
Load Factor %	68.7	67.4	65.8	65.8	65.8	65.8	65.8	65.8	65.8	66	66	66
Maximum Demand (MW) (Net)	336	370	384	401	420	470	502	532	564	595	631	669
2. Available Capacity												
2.1 Thermal												
Bahia Las Minas	135	135	135	135	135	135	135	135	135	135	135	135
San Francisco	47	47	47	47	47	36 b/	36	24 b/	24	24	24	24
Avenida Sur	5	5	5	-	-	-	-	-	-	-	-	-
Diesel Central Province	12	12	12	12	12	12	12	12	12	12	12	12
Diesel West Panama	6	6	6	6	6	6	6	6	6	6	6	6
Diesel Chiriqui	17	17	17	17	17	17	17	17	17	17	17	17
Gas Turbines	-	36	36	36	36	36	36	36	36	36	36	36
Other Future Thermal d/	-	-	-	-	-	-	-	-	-	-	-	150
Sub-total Thermal	221	258	258	253	253	242	242	230	230	230	230	380
2.2 Hydro												
Tagunda	7	7	7	7	7	7	7	7	7	7	7	7
Chiriqui Hydro	4	4	4	4	4	4	4	4	4	4	4	4
Bayano	150	150	150	150	150	150	150	150	225	225	225	225
Estrella-Los Valles	90	90	90	90	90	90	90	90	90	90	90	90
Fortuna I and II	-	-	255	235	255	255	235	300	300	300	300	300
Other Future Hydro e/	-	-	-	-	-	-	-	-	80	120	120	120
Sub-total Hydro (average)	251	251	506	506	506	506	506	551	706	746	746	746
Sub-total Hydro (firm) g/	177	177	254	254	254	254	254	498	590	643	643	632
2.3 Total Available Capacity												
Average	473	509	764	759	759	748	748	781	936	976	976	1,126
Firm	399	435	512	507	507	496	496	728	820	875	875	1,012
Maximum Demand	336	370	384	401	420	470	502	532	564	595	631	669
3. Firm Reserve												
Reserve in MW	63	65	128	106	87	26	(6) h/	196	256	280	244	343
Reserve in % of Maximum Demand	19	17	33	26	21	6	(1)	37	45	47	39	51

a/ Does not include isolated systems.
b/ Retirement of old equipment.
c/ Gross generation less plant use.
d/ Possibly a coal fired plant.
e/ Possibly the Boti-Barrigon hydroelectric project.
f/ Actual data.
g/ Determined for the combined operation of all hydro-plants connected to IRHE's system in a dry year (one out of every ten years).
h/ If 1988 would be a dry year, IRHE would not be able to meet the maximum demand with power generated from its own system; however, the balance could be covered by importing power from neighboring systems (Costa Rica and the Canal Zone).

February 11, 1983

61

EXHIBIT F

(Taken from Ref. IIA4, pg. 8)

INSTALLED CAPACITY AND 1984 GENERATION IN PANAMA

INSTALLED CAPACITY (12/31/84)

			IRHE	Panama Canal	Self Producers	Country Total
Thermal		MW:	272 (1)	116	61	449
Hydro		MW:	552 (2)	94	0	646
	Total	MW:	824	210	61	1,095
Thermal		%:	33	55	100	41
Hydro		%:	67	45	0	59
	Total	%:	100	100	100	100

GENERATION 1984)

Thermal		GWH:	712	428	160	1,300
Hydro		GWH:	1,552	116	0	1,668
	Total	GWH:	2,264	544	160	2,968
Thermal		%:	31	79	100	44
Hydro		%:	69	21	0	56
	Total	%:	100	100	100	100

NOTES: (1) vs. 258MW in Exhibit E.

(2) vs. 506MW in Exhibit E