PN-ABG-256

GOVERNMENT OF PAKISTAN
UNITED STATES AGENCY FOR INTERNATIONAL DEVELOPMENT
IRRIGATION SYSTEMS MANAGEMENT PROJECT

DRAFT

VOLUME 2

General Operation and Maintenance Procedures For Operation and Water Measurement

PRC Engineering / CHECCHI

GOVERNMENT OF PAKISTAN
UNITED STATES AGENCY FOR INTERNATIONAL DEVELOPMENT
IRRIGATION SYSTEM MANAGEMENT PROJECT

VOLUME 2
GENERAL OPERATION AND MAINTENANCE PROCEDURES FOR OPERATION AND WATER MEASUREMENT

PRC ENGINEERING/CHECCHI
APRIL 1987

CHAPTER I : INTRODUCTION

Section 1 : Purpose of This Manual I-1

Section 2 : Overview I-3

Section 3 : Operational Problems I-6

Section 4 : Water Measurement I-7

CHAPTER II : OPERATIONS

Section 1 : Overview II-1

A. Purpose of the Canal System II-1
B. Authorization II-1
C. Allocation of Indus Basin Water II-2

1. General II-2
2. Federal Control, Indus River Flows II-3
3. PID Control II-4
4. Tarbela Reservoir II-4
5. Mangla Reservoir II-5

Section 2 : Introduction to Systems Operation II-6

A. Characteristics of a Well Managed Canal System II-6
B. Original Concept of Canal System Operation II-6
C. Organizational/Operational Limitations II-9
D. Sociopolitical Realities II-10
E. Changing Water Management Concepts II-11
F. Definition of Operation Procedures II-12

Section 3 : Scheduling II-14

A. Introduction II-14
B. Role of Scheduling II-16
C. Preparing an Operating Schedule II-17

Section 4 : Delivery II-20

A. General II-20
B. Operating Modes II-21

1. Continuous Flow II-22

a. Advantages II-23
b. Disadvantages II-24

2. Proportional Flow II-24

a. Advantages II-25
b. Disadvantages II-25

3. Rotation Distribution II-25

a. Number of Turns II-26
b. Duration of Turns II-27
c. Variable Areas II-27
d. Variable Discharge (demand) II-28
e. Advantages and Disadvantages of the Rotation Method II-29

4. Demand Irrigation II-31

C. System Operation II-32

1. General II-32
2. Infrastructure Controls II-33

a. Physical Controls II-33
b. Flexibility II-35
d. Mixed Conditions II-38

C. Travel Times II-38

3. System Controls II-39

a. Flow Regulation II-40
b. Systems Operation II-41

Section 5 : Monitoring II-43

A. General II-43
B. Observations II-43
C. Inspection II-44
D. Short Term Monitoring Program II-44
E. Long Term Monitoring Program II-46

Section 6 : Evaluation II-46

Section 7 : Adjustments II-49

Section 8 : Accountability II-51

Section 9 : Operation of Water Control Structures II-52

A. Introduction II-52
B. Operator Attendance II-53
C. Communications II-53
D. Operating Log II-54
E. Operating Standards II-54

1. Performance Standards II-54
2. Consequence of Inattention to Details II-55
3. Flow Limits II-55
4. Canal Filling and Drawdown (dewatering) II-55

F. Operation of Gates II-56
G. Operation of Control Structure Using Stoplogs II-58

CHAPTER III : CALIBRATION AND MONITORING

Section 1 : Introduction III-1

A. General III-1
B. Level/Degree of Calibration Required III-2
C. Calibration Constituents III-3

Section 2 : Calibration Procedures for Discharge III-5

A. General . . . . . III=5
B. Data Collection III-6
C. Staff and Equipment Requirements III-6
D. Field Procedures III-7

1. Field Measurement Accuracy III-8
2. Location of Flow Measurements III-9
3. Measuring Station Controls III-10
4. Velocity-Depth Measurements III-12
5. Water Level Measurements III-14
6. Water Control Structures III-15
6. Outlets III-16

E. Seepage Losses III-18

1. Inflow-Outlet Method III-18
2. Ponding Method III-19
3. Wetted Perimeter III-20
4. Seepage Loss Rate III-22
5. Evaluation of Losses III-22

Section 3: Monitoring Programs III-23

A. General III-23
B. Monitoring Flows III-25

1. General III-25
2. Discharge or Inflow III-27
3. Calibration of Water Surface Levels III-28
4. Control Point Discharge III-28
5. Outlet Discharges III-29
6. System Losses III-30
7. Records III-31

C. Monitoring for Sediment Management III-32

1. Background III-32
2. Control of Sediment Transport in a Canal III-33
3. Function and Types of Sediment Traps III-35

a. Dual Chamber III-35
b. Long Narrow Basin III-36
c. Short Wide Basin III-36

4. Effects of Sediment Trap Location III-37
5. Effects of varying concentration III-38
6. Monitoring Sediment Balance III-38

CHAPTER IV : STAGE MEASUREMENT

Section 1 : Introduction IV-1

Section 2: Datum of Gauge IV-2

Section 3: Vertical Staff Gauge IV-2

A. Staff Gauge Material and Dimensions IV-3
B. Gauge Zero Setting IV-3

Section 4: Placement of Staff Gauge IV-4

D. Reading Staff Gauge IV-6
E. Recording Stage Readings IV-7
F. Calibration Check IV-7

Section 5: Inclined Staff Gauges IV-8

CHAPTER V : CURRENT-METER MEASUREMENT

Section 1: Introduction V-1

Section 2: General Description V-1

Section 3: Classification of Current Meter Measurements V-4

Section 4: Procedures for Current Meter Measurements V-4

A. General Procedure V-4
B. Measurement of Velocity V-7
C. Measurement by Wading V-9
D. Measurement from a Boat V-11
E. Computation of Mean Gauge Height V-12

Section 5: Current Meters and Related Equipment V-14

A. Introduction V-14
B. Price-Type Meter V-14
C. Pygmy Meters V-15
D. Wading Rods V-16
E. Care of Current Meters V-16
F. General Field Procedures and Precautions V-17

CHAPTER VI :ORIFICE HYDRAULICS

Section 1: Introduction VI-1

Section 2: Circular Orifices VI-2

A. Introduction VI-2
B. Determination of Discharge VI-2

Section 3: Rectangular Orifices VI-4

Section 4 : Applications of Orifice Flow VI-6

Section 5: Flow Under a Slide Gate VI-7

A. General VI-7
B. Gate Controlled Flow VI-8
C. Flow Without Gate Control VI-12
D. Calibration VI-13

1. Sill Conditions VI-13
2. Measurements VI-14
3. Multiple Gate Conditions VI-14

CHAPTER VII : WEIR HYDRAULICS

Section 1 : Introduction VII-1

B. Staff Gauge Setting VII-2
C. Recording Flows VII-3
D. Calibration Check VII-3

Section 2 : Thin-plate Weirs VII-3

A. Rectangular Thin-plate Weir VII-4
B. Trapezoidal Thin-plate Weir VII-5
C. Triangular or V-notch Thin-plate Weir VII-5
D. Submerged Flow Conditions VII-6

Section 3 : Short Crested Weir VII-7

A. General VII-7
B. Weir Sill With Rectangular Control VII-7
C. Cylindrical Crested Weir VII-8

Section 4 : Broad Crested Weirs VII-9

A. General VII-9
B. Head Discharge Equation VII-10

Section 5 : Submerged Flow VII-12

A. Introduction VII-12
B. Methods of Analysis VII-13

1. Two Dimensional Analysis VII-13
2. Three Dimensional Analysis VII-14

Section 6: Field Calibration VII-16

CHAPTER VIII : FLUMES HYDRAULICS

Section 1 : Introduction VIII-1

Section 2 : Flumes VIII-1

A. Flow Characteristics VIII-1

1. Parshall Flume VIII-3
2. Long-Throated Flume VIII-3
3. Cutthroat Flume VIII-4

D. Submerged Flow VIII-4

E. Non Regular Control Applications VIII-4

Section 3 : Controlled Section Measuring Stations VIII-4

A. Introduction VIII-4
B. Establishment of Regular Control Sections VIII-5

1. Location VIII-5
2. Construction VIII-6

C. Establishment of Irregular Channel Control Sections . . VIII-6

CHAPTER IX : WATERCOURSE OUTLET HYDRAULICS

Section 1 : Introduction IX-1

Section 2 : Need for Watercourse Discharge Measurements IX-1

Section 3 : Description of Outlets IX-3

A. General IX-2
B. Open Flume Outlet IX-3
C. Adjustable Orifice Semi Module IX-4
D. Pipe Outlets IX-6
E. Submerged Flow Conditions IX-7

CHAPTER X : DATA PROCESSING

Section 1 : Introduction X-1

Section 2 : Data Collection X-2

Section 3 : Discharge Ratings X-3

A. General X-3

B. Plotting of Rating Curves X-4

Section 4 : Water Monitoring Records X-9

CHAPTER XI : METRICATION

A. Introduction XI-1
B. SI Units and Symbols XI-1
C. Order of Magnitude XI-2
D. Special Unit Used with SI XI-3
E. Usage and Writing Style with SI Units XI-5
F. Conversion to SI Units XI-6
G. Use of Hydraulic Equations XI-6

APPENDIX

A Reference

LIST OF TABLES

II-1 Almani Branch Canal Irrigation Demands
II-2 Register of Sanctioned & Regulated Flows
II-3 Performance Standards for Canal Operation
II-4 General Guidelines for the Operation of Cross Regulators
II-5 Exercising and Testing Gates

III-1 Example Evaluation Measured & Sanctioned Discharge
III-2 Example Calibration of APM Outlets Along a Canal Reach
III-3 Definition of Terms Used in Sediment Transport
III-4 Equipment Requirement for Canal Calibration

IV-1 Sample Rating Table
IV-2 Submerged Weir Correction Factor

VI-1 Coefficients for Free Flow Below a Sluice Gate

VIII-1 Values of the Ratio

IX-1 Example Calibration of Pipe Outlets in a Canal Reach

XI-1 Derived SI Units
XI-2 Prefixes and Symbols for Prefixes Used to Form Names and Symbols of Decimal Multiples & Submultiples of SI Units
XI-3 Units From Different Systems Used With SI & Units Accepted for Limited Use
XI-4 Conversion to SI Units for Physical Quantities Frequently Used in Water Resources Practice
XI-5 Values for Physical Properties

LIST OF EXHIBITS

II-1 Variable Area System of Rotation
II-2 Example of Rotation Irrigation Scheduling
II-3 Affect of a Change in Inflow at a Water Control Structure

II-4 Affect of a Change in Inflow at a Water Control Structure
II-5 Affect of a Change in Inflow at a Water Control Structure
II-6 Operating Log

III-1 Example Seepage Loss Determination
III-2 Flow Monitoring Control Points
III-3 Long Term Flow Monitoring Record
III-4 Embankment and Sediment Monitoring

IV-1 Weekly Operations of Gauge Height
IV-2 Record of Daily Discharges
IV-3 Observation of Discharge

V-1 Discharge Measurement Notes
V-2 Discharge Measurement Notes

IX-1 Statement Showing Working of Outlets

X-1 Discharge Measurement Summary Sheet
X-2 Record of Daily Rainfall
X-3 Record of Daily Discharges
X-4 Water Report

LIST OF FIGURES

I-1 Cropping Calender

II-1 Illustration of Travel Time for Discharge Changes
II-2 Schematic of Conveyance System Water Measurement Facility Requirements
II-3 Example of Daily Water Distribution Chart

III-1 Terminology in Sediment Transport
III-2 Measuring Water Surface Level at Control Point
III-3 Generalized Phase of Sediment Trap Behavior
III-4 Survey Requirements Canal Monitoring Program
III-5 Survey Requirements Outlets Monitoring Program

IV-1 Typical Installation Diagram Broad Crested Weir
IV-2 Setting of a Staff Gauge on Lined Canal Side Slope
IV-3 Reading of Staff Gauge
IV-4 Direct Flow Reading Staff Gauges

V-1 Definition Sketch of Mid-section Method of Computing Cross-sections Area for Discharge Measurements
V-2 Typical Vertical-Velocity Curve
V-3 Locating Boat in Measuring Cross-section
V-4 Typical Current Meter Table Rating
V-5 Price-Type Current Meter
V-6 Current Meter Wading Rod
V-7 Pygmy Meter

VI-1 Definition Sketch Orifice Flow
VI-2 Orifice Box Dimensions

VI-3 Definition Sketch Flow Below a Vertical Gate
VI-4 Approach Velocity Coefficients for Various Control Sections
VI-5 Discharge Coefficients for Vertical Lift Gate
VI-6 Effect of a Tailwater Level on Modular Flow Below a Sluice Gate
VI-7 Definition of Terms Reference Free Flow to Center of Gate Opening
VI-8 Typical Gate Sill Installations
VI-9 Typical Discharge Curves Large Vertical Lift Gate

VII-1 Illustration of Terms Thin Plate Weir
VII-2 Discharge Coefficients Rectangular Thin Plate Weir
VII-3 Contraction Adjustment Factor K_c Thin Plate Weir
VII-4 Discharge Coefficients Thin Plate V-notch Weirs
VII-5 Sketch of Weir Sill Rectangular Control Section
VII-6 Discharge Coefficient C_d Weir Sill with Rectangular Control Section
VII-7 Illustration of Terms Cylindrical Crested Weir
VII-8 Discharge and Reduction Coefficients Cylindrical Crested Weir
VII-9 Conversion and Correction Factors Cylindrical Crested Weir
VII-10 Discharge Coefficients Broad Crested Weir
VII-11 Submergence Ratio Effects for Two Types of Weirs

VIII-1 Discharge Coefficients C_d Trapezoidal Flume

IX-1 Open Flume Outlet
IX-2 Rectangular Open Flume
IX-3 AOSM Outlet

X-1 Transporting Logarithmic Scales
X-2 Adjusting for Gauge Zero

FOREWORD

Section 1: Purpose

The purpose of this manual is to provide a comprehensive description of the state-of-the-art standardized flow measurement procedures applicable to Pakistan canals. The manual is intended for use as a guide and reference text primarily for hydraulic engineers and irrigation system staff personnel to improve equitable water distribution to the watercourses.

No manual can cover solutions to all the potential combinations of problems that could some day occur from operating a system. The guidelines presented herein cover the normal conditions involved in canal water measurements and operations.

This manual was prepared with the intent of introducing modern technology into the operation and maintenance of an irrigation system under the current organization of the Irrigation Circle and Provincial Irrigation Department including their policies and guidelines. Particular emphasis was placed on water measurement procedures and requirements. This breaks with some of the traditional procedures currently in effect.

Section 2: Authorization

This manual has been prepared to partially meet the requirements of Task V.d of the PRC Engineering/Checchi Work Plan, 1986-87. Task V.d requires "Editing and Publishing of a New General O&M Manual".

CHAPTER I

INTRODUCTION

CHAPTER I
INTRODUCTION

Section 1 : Purpose of This Manual

The purpose of this manual is to provide the basic background information required by Executive Engineers, Subdivision Officers and Sub-engineers to measure canal discharges and operate the irrigation systems. The manual is not system specific but, instead, covers a series of subjects that are applicable for use in all irrigation systems. It provides the details of conducting water measurements and guidelines for making decisions on allocating water during both the high and low flow periods.

The operational objective of an irrigation system is to provide the equitable distribution of the available water resource to all watercourses served by the system. This is accomplished by scheduling which, in theory, is a relatively simple method of planning the delivery of water. In practice, the delivery of the water is complicated 90 percent of the time by people problems and 10 percent by technical problems. One of the people related problems is the inability to be able to tell a farmer exactly how much water the watercourse is receiving and how the water is being allocated within the system. Due to the overall shortage of water, conflict resolution will remain a major problem. The major technical problem is the inability of a structure or part of the system to perform as required. As a result, the daily operation of an irrigation system requires the canal officers to solve a never ending series of problems based on an insufficient supply of water, the farmers' real or felt need for more water, and the ability of the system to perform as required.

There is no one set of answers that can be placed between the covers of this manual that would cover the complete array of all the potential combinations of problems that can and someday will arise from operating a system. The Executive Engineer, as well as his supervisors, must become trained to solve problems. A user oriented manual such as this one can only go so far in providing the guidelines for solving problems.

This manual is to be used by designers, operations personnel and administrators for:

- Generalized operational procedures for canal systems.
- General reference for planning the installation, management and maintenance of a canal system water measurement program.
- Possible modification of existing structures to serve as calibrated measuring stations.
- Specification of required measuring equipment and training of operational personnel.

The manual does not attempt to discuss in detail all types of water measuring devices. Rather, it concentrates on those devices and methods that are thought to be suitable for conditions found in the main, branch and distributary canals in Pakistan. There are many detailed reference works which can be used to supplement this manual. A partial list of such works is given in Appendix A.

This manual was prepared with the intent of introducing some modern technology into operation of an irrigation system under the current organization of the Irrigation Circle and Provincial Irrigation Department policies and guidelines. Particular emphasis was placed on water measurement procedures and requirements. It breaks with some of the traditional procedures currently in effect. The new procedures have been presented in such a manner that it will be possible to upgrade them without changing the basic concept and procedures as the staff reaches the level of competence to handle the increasing complexity of modern technology. Technology generally requires improved communications and occasionally a new piece of equipment.

The manual supports the delegation of responsibility of day-to-day decision-making to the Sub-division Officers (SDO). There should be emphasis in the Executive Engineers Office being involved in all the day-to-day process. The communication system is such that the SDO does not have the time to refer problems up the chain-of-command for a decision. He should be able to use

this manual as a standard operating procedure long with standing orders to guide his decision-making processes. The Executive Engineer does not have enough time to devote to solving all the day-to-day problems over the entire system. He already has the administrative problems associated with the many employees under his control. The Executive Engineer must inspect the project periodically to observe the procedures and to offer advice as part of his supervisory responsibility.

Section 2 : Overview

The canal systems in the Indus Basin are the life line of Pakistan's agricultural. Without the water supplied by the irrigation system, most crops would not be grown in sufficient quantities to support the country's basic requirements. Water is a scarce item during most of the year. There is not enough water in the rivers and storage reservoirs to meet the crop water demands of the total cultivatable command area (CCA) of the country. In fact, there is not sufficient surface water available to meet 50 percent of the demand. The availability depends on the source of water, location of each irrigation system and provincial and national allocation of available supplies.

There are currently more than 36,500 miles of canal in Pakistan serving a cultivatable command area of 34.5 million acres. The major concentration of irrigated land is in the Provinces of Sind and Punjab but there are also significant areas in Baluchistan and the Northwest Frontier. The division of water between provinces and between the 43 individual systems (canal commands) within the Indus basin is based on annual and seasonal allocations and substantiated by water measurement. There are three dams/reserviors situated in the basin to store wet season flows for use in the dry season. There are 19 barrages located on the Indus River and its main tributaries that control the majority of the individual canal systems. Travel time of water destined for the extremes of the basin can take weeks from the time it is released from Tarbela or Mangle Dams until it finally reaches the individual farmer; thus, complicating the problem of meeting crop demands.

The rainy season extends primarily from mid April to mid-October. Excess runoff is stored in the Warsak, Tarbela and Mangla Dams until they are filled. Therefore, flows in the Indus River and its tributaries generally do not exceed the normal irrigation demands except in a 3-months period, July to October. In other words, no water passes the Kotri Barrage to flow into the ocean except in those three months.

A general cropping calendar for Pakistan is presented on Figure I-1. The Kharif or hot season cropping pattern is primarily rice, cotton, sugarcane, fodder crops including maize, and specialty crops of fruits and a variety of vegetables. The rabbi or cool season cropping pattern consists of wheat, sugarcane, fodder crops, and the specialty crops. Timing varies locally with respect to the crop calendar as does the cropping pattern itself. Cotton and wheat are planted in rotation. Delays in the cotton harvest and subsequent wheat planting have been shown to reduce the wheat yields significantly. Irrigation system managers in the future, will require a more detailed knowledge of individual crop irrigation requirements as well as other agronomic input functions of crop production.

The operation of an irrigation system normally requires a detailed knowledge of crop water requirements because water is usually delivered to meet peak irrigation demands. In Pakistan this is not generally the case; the canals are required deliver a fixed supply of water each distributary and minor canal. The design of each system was based on an equitable supply to be delivered to each watercourse; this meant a uniform cropping intensity with a fixed water duty rate. The intensity between systems varries considerably but all were well below 100 percent. Over a period of time, lax discipline has allowed the intensities to shift (increase) towards the headend of the canals. In some cases, the average inflow to a system has also been increased over the period of time since the project was first implemented, Many changes have been made since the first projects were constructed about 140 years ago. Few if any of these are documented which leads to many operational and legal difficulties.

There has been a continuous increase in the reported irrigated area over the years. In recent years, the size of the canal system has been stabilized because the available river flow has been used; nothing flows into the ocean during 8 or 9 months of the year. Canals are operated with minimum freeboard so it is difficult to increase capacities during the kharif season. Expansion of the irrigated area has been accomplished primarily through increased utilization of ground water. For example, approximately 40,000 private wells being added in the 8 year period from 1975 to 1983 in the Punjab alone. Without the addition of new storage facilities, the construction of new canals will require the removal of water currently being used in the existing systems.

Pakistan has a 365 day growing season. For some crops there appear to be a potential yield limitation due to extreme temperature, but this is not a major factor yet. Poor agronomic practices, are a much larger constraint to high production levels, particularly fertility. The lack of sufficient water to irrigate all of the area that can be commanded by a gravity system limits the number of acres cropped, resulting in (1) large areas under fallow conditions and (2) potentially large areas producing crops under various levels of moisture stress. Since the decision on where and how much water is supplied to a given area rests with the farmer, there is a multitude of variations between the two extremes. Lack of equitable water deliveries compounds the problem in that excessive amounts are obtained at the headends of canals and/or water courses (often causing water logging and other drainage related problems) which aggravates the situation at the tailends. Private wells are generally used to increase the cropping intensity (augment the supply) within an irrigation system command area rather than to bring in what would be considered new land.

In most canal or conveyance systems, stage-discharge relation has been established at one time or another at the water control structure. This is the basis for the distribution of water throughout the system. They are seldom, if ever, checked to determine if the relation is still valid. In most cases where structures are used, the stage-discharge relation was based on an engineer's assumed discharge coefficient and it has never been calibrated.

Errors can be rather large in some instances. In addition, sedimentation downstream can cause backwater effects that change the stage-discharge relation which goes undetected if the site is not periodically checked.

Section 3 : Operational Problems

The primary problem in alluvial canal systems in Pakistan is that the sanctioned flow does not reach the outlets located near the tails of distributaries and minors. There are many reasons why water does not reach the tailend watercourses, including:

- Tampered outlets upstream
- Inaccurate seepage loss estimates
- Inaccurate inflow estimates
- Sedimentation and resulting change in water surface levels
- Improperly set outlets
- System never calibrated and adjusted to what was constructed
- Limited desilting
- Un-coordinated re-establishment of equitable distribution
- Sociopolitical pressures.

In an attempt to overcome this problem, PID operating personnel have increased the discharge to the channel by increasing the water level in the parent channel. Although the increase in discharge results in higher initial water levels, it also causes upstream outlets to receive disproportionately higher discharges, transfers even greater sediment loads into the tail channels and is, on the whole, self defeating. In some instances water will still not reach the tail cluster.

When recognized during redesign, these operational problems can be overcome by resetting the outlets for sanctioned discharges, adding sediment traps and control structures (falls) to maintain water surface levels for design discharge.

must maintain. The establishment of accountability rests on the calibration and monitoring.

Section 4 : Water Measurement

Accurate and reliable water measurement has been important for many years. It was the backbone of system operation prior to partition. Today it is even more important due to the greater population density, the need to improve system efficiency to conserve a critically short national resource and the greater need for irrigation water to grow food and fib .r. Pakistan's economy, in particular, owes its state of development to the systematic improvement and distribution of its water resources.

In the management of Pakistan's vast facilities, fair and equitable consideration must be given to the users, and reliable measurements must be obtained of the water deliveries made to the distributaries and minors.

Although the general relaxation or permisive enforcement of authority has resulted in headenders directly appropreating additional water through tampering of the outlets or excessive outside intervention so that equitable distribution is no longer possible as a day-to-day happening. In many cases, the canal officers really do not know how much water is coming in to their jursidiction and how much is going where although they may, in all honesty, think they do. Sufficient information is at hand, from recent sample calibrations, to confirm that outlet discharges, seepage losses and canal flows are nowhere near what the canal officer(s) indicated they were to the best of their knowledge. The lack of accurate water measurement data is immediately apparent.

Even though water measurements have been suspended in some instances, a concientious canal officer should know where the water is going, even if he cannot maintain or control equitability. For those who are dedicated, the methods present in this Volume will assist the canal officer in the performance of his duties. This manual emphasizes the use of current meters

and the need to accurately make all measurements. Float gauges and related methods are not sufficiently accurate for today's needs.

Calibration, shakedown and monitoring, which depend on accurate water measurement form the basis of establishing and maintaining equitable distribution of water. Once established, accountability can be maintained only by enforcing discipline. This can be made easier if the canal officer can continuously show where the water is going. Periodic recalibration would let the farmers know why the system is not performing according to standards.

The canal officers must be realistic about the Indus Basin Canal System's capability. The limitations have been briefly pointed out and are covered more completely in the following Chapter. It does not say the performance of the present system in delivering allocations can not be improved substantially. They can but the system will always have limited reliability and some uncertainty. The problem facing the canal officers are both how to improve canal system performance and how to match the most likely water supply to the farmers needs and cropping technology. The prevalent idea that the system can meet full crop requirements on the entire command area if it were just manageed better no basis in fact.

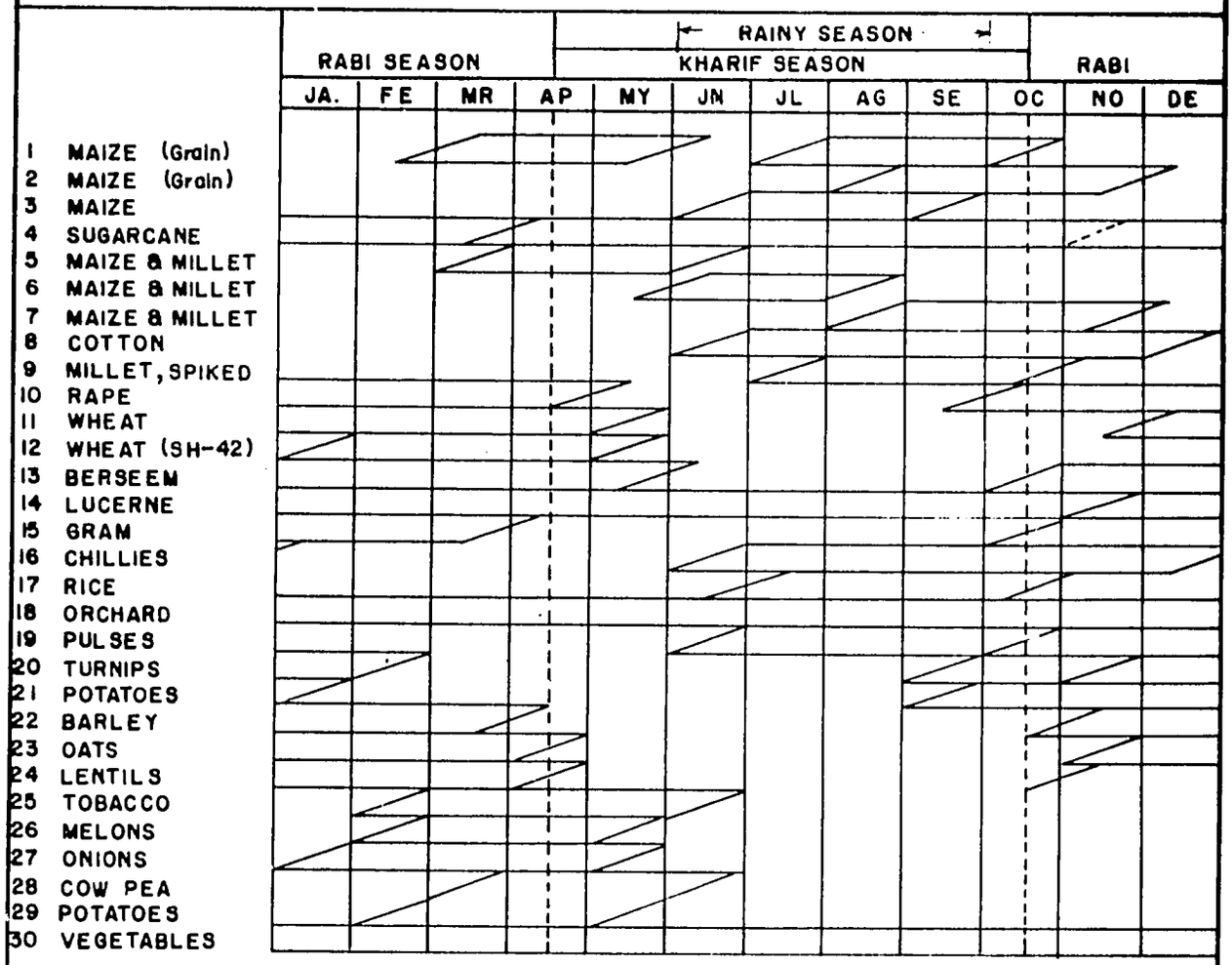

NOTE: MOST CROPS HAVE A TWO MONTH PLANTING SEASON

CROPPING CALENDAR

CHAPTER II

OPERATIONS

CHAPTER II
OPERATIONS

Section 1 : Overview

A. Purpose of the Canal System

The purpose of an irrigation system is to deliver water of appropriate quality in the specified quantity and at the specified time and place for optimizing agricultural production in a given area; therefore, considerable emphasis must be placed on measurement and control of the water in transit through the system. Adequate control and accurate measurement of water from storage or diversion to delivery are necessary for successful irrigation management to meet legal obligations concerning water delivery, to conserve water, to ensure equitable distribution of water to those served, and to establish and maintain a cordial relationship between the Irrigation Department's staff and the water users.

The day-to-day management of water requires that daily water use be known and compared against flow reserves and demands. This can only be accomplished by knowing with reasonable accuracy the amount of water being diverted and delivered. It is essential to realize its ultimate beneficial use. Good water measurement creates confidence in the development and can go a long way toward eliminating waste and harmful irrigation practices that may lead to a variety of drainage related problems such as salinization of soil, restricted root zone, excessive leaching of nutrients, and eventually complete waterlogging.

B. Authorization

The Federal Government has responsibility and authority to administer delivery of irrigation supplies to the individual canal systems. The Federal Government has delegated this responsibility and authority to Provincial Governments and in part to the Water and Power Development Authority (WAPDA). The latter concerns the operation of the Tarbela and Mangla Reservoirs for power and involvement in the SCARP Projects and other new construction, particularly drainage.

23

The Provincial Governments have set up Irrigation and Power Departments (PID) which have the responsibility to operate and maintain the Irrigation canal system within their provincial boundaries. The PID's operate under a series of legal acts and regulations including:

* Punjab Irrigation Act
* Sind Irrigation Act
* Manual of Irrigation Practice, 1943, Reprinted 1963
* Revenue Manual
* Irrigation Manual of Orders, 3rd Edition 1940, Reprinted 1964
* Departmental Financial Rules

In addition to all the Governmental Institutions of Pakistan, the Indus River Commission is the International Agency which arbitrates the control of Indus River water between the two countries. The commission has its roots in the Indus Conservancy and Registration Department organized in 1861. The commission meets several times a year to discuss important technical matters.

C. Allocation of Indus Basin Water

1. General

The allocation of Indus Basin water to the 43 canal systems (water shares) provides the basic water rights in the basin. The principle of allocation is based on historic rights with the oldest having the highest priority. The water right is equivalent to the design discharge of the canal which is considered a sanctioned quantity.

The majority of the irrigation canal systems were constructed prior to partition and were operated on a run-of-river basis. Inundation canals are defined as canals which were able to receive water only during the high flow periods which is essentially the kharif season. These canals continue to have only a kharif season allocation and are dry during the rabi season. They are usually given a higher priority during the beginning of the kharif season so that cultivation can start on time.

The 12 Link canals are used only to convey/transport water to 8 of the 9 barrages in the Punjab and do not have an allocation as such. The Marala Barrage on the Chenab River does not receive any replacement water via a link canal.

2. Federal Control, Indus River Flows

Tarbela storage is controlled by the Government of Pakistan (GOP) at the Prime Minister and Parliament levels. A Federal Committee has been formed and given the responsibility to oversee the division of Tarbela water. The Federal Committee meets twice a year to set the basic division of water between Provinces. A sub-committee of the Federal Committee meets monthly to review conditions in the Tarbela Reservoir. The sub-committee includes the Provincial Directors of Regulation, WAPDA officials and others.

Tarbela and Mangla Dams and their Reservoirs are operated by WAPDA because the power stations are a major supplier of energy to Pakistan. Tarbela is operated primarily for firm power and Mangla for peaking. Reregulating reservoirs downstream provide the constant discharge needed to supply the irrigation canals.

Tarbela Reservoir and power plant are operated on 10-day basis except for the two periods 11-20 October and 11-20 April which are divided into 5 day periods due to start and end of rabi season and changes in idents on 16 October and 16th April. Reservoir storage is stated on the first of the month and 10-day forecasts are made for inflow, power and irrigation idents based on historic data and the reservoir rule curve. Since Tarbela is operated primarily for firm power forecasting withdrawal is easier. Chashma, located downstream of Tarbela has a live storage capacity of 0.7 MAF which allows the power indent to differ somewhat from irrigation.

When inflows are less than forecast and the reservoir is drawn down to the operating rule curve, releases are curtailed during the next 10-day period. Similarly, when inflows are greater than forecast, more water is available for power generation.

25

3. PID Control

The PID's Director of Regulation, is incharge of preparing the day-to-day distribution of water to each of the barrages. The Tarbela water can be sub-allocated to the canal by the Province. These generally follow the historical precedent.

Allocation within a canal system to the branch, distributary and minor canals is based on the design discharge of each canal plus a seepage loss in the branch canal. When water is scarce, the inflow to the system is reduced by the Director of Irrigation and the Chief Engineer incharge of the appropriate barrage. This reduction is allocated throughout the system. Because the outlets usually are not gated the distribution of water remains proportion at each outlet as the canal water level decreases.

A surplus of water is handled the same way but extreme care must be observed because freeboard is seldom available that would allow a substantial increase above the design discharge

4. Tarbela Reservoir

The water stored at Tarbela Reservoir is allocated between Punjab, Sind and Baluchistan Provinces. The stored water in Tarbela has not been dedicated. Guidelines for its allocation are controlled and issued by the GOP at the Prime Minister and Parliament level. Currently, the allocation is as follows:

Punjab	-%
Sind	-%
Baluchistan	-%
North West Frontier	-%

The Committee meets at least twice a year to decide the allocation of water in Tarbela and as often as required when the available storage capacity deviates from its normal pattern. The additional meetings are held to make any necessary changes in the releases as hydrologic conditions warrant.

The allocated Indus River flows to the Sind and Baluchistan are met at the Taunsa Barrage. Officers from both the Sind and Punjab Irrigation Departments are stationed at the barrage to supervise the release and measurement of water downstream.

Baluchistan receives water via the Pat Feeder Canal at the Guddu Barrage and the Kirtha Branch Canal via the Northwest Canal at the Sukkur Barrage.

The releases from Tarbela are made through the power station to meet the electrical demand. The total release over a period of about a week is controlled by irrigation requirements. The hourly release pattern fits the electrical load. The allocated Indus River flows to the Northwest Frontier are made at the Chashma Barrage to the Paharpur Canal. An additional release will be made into the Chashma Right Bank Canal when it becomes operational. The Paharpur Canal has been closed and will receive water via the Chashma Right Bank Canal.

5. Mangla Reservoir

The water stored in Margla Reservoir was dedicated to replacing the water in the Ravi and Beas Rivers diverted by India following partition. Therefore, this water is used entirely within the Punjab to satisfy the demands for systems that lie downstream of the U J Link, Q B Link and B S Link Canals on the Jhelum, Chenab, Ravi and Sutlej Rivers. Water from Mangla Reservoir can be delivered to the following barrages:

Barrage	River
Rasul	Jhelum
Khanki	Chenab
Qadirabad	Chenab
Trimmu	Chenab
Balloki	Ravi
Sidhnai	Ravi
Suleimanki	Sutlej
Islam	Sutlej
Penjnad	Sutlej

21

The release from Mangla Reservoir is used to meet power requirements of the electrical net work under the jurisdiction of WAPDA as well as the irrigation indent. The afterbay recently completed that incorporates the Rasul Barrage allows the power station to be operated to meet the power loads. The releases from the Rasul Barrage are made at a constant rate to satisfy the irrigation demands as authorized by the Director of Regulation.

Section 2 : Introduction to Systems Operation

A. Characteristics of a Well Managed Canal System

The main characteristics of a well operated canal system can be enumerated in their order of importance:

* Reliability (arrival of water according to schedule)
* Timely supply (meets irrigation demands)
* Equitable distribution
* Efficient supply (minimization of canal losses)
* Maintain canal standards (adequate budget and professional staff)
* Accountability, discipline and enforcement
* Minimum involvement of system administration combined with maximum coordination with Water User Associations (WUA).

A well operated irrigation system should aim at the achievement of most, if not all, of these characteristics within the constraints imposed on the system by Government policies, topography and the physical facilities provided during initial construction.

B. Original Concept of Canal System Operation

The oldest concept of operation goes back to the original inundation canals constructed in the time of the Mughals, 1630 and even earlier. Canals were headed on the major rivers with an open headworks that would allow water to enter as the river rose during the annual flood season. Water was conveyed to the farmers via a series of canals and watercourses. As time passed, the control structures were improved and checks and drops were introduced to assist in the control of water distribution and bank erosion.

Temporary shingle bunds were constructed across the rivers to help with low flow diversion. Sediment deposition has always been a major problem when canals were constructed with slopes too flat to carry the sediment load as history records the silting up of many early canals.

Modern irrigation development in the Indus Basin started in 1850 with the Upper Bari Doab Canal. By 1872 engineers developed sufficient skills and techniques to construct permanent barrages (weirs) across major rivers. This changed the operating criteria because the permanent checking up of the water level and introduction of gated headworks allowed year round irrigation deliveries. Run-of-river operations are such that water is diverted if available. The concept being; use it or loose it. Sluice gates were introduced in front of canal intakes in an attempt to reduce the incoming sediment load.

The silting up of canals continued to be an major maintenance problem. By 1893 Kennedy tried to increase the sediment withdrawal by placing the watercourse outlet near the canal bed. The first efforts at designing canals to carry the sediment load were started. Lacey developed and published his criteria in the 1930's but by this time the majority of the irrigation canals were either constructed or under design. Construction of nearly all the main systems was completed by about 1942. This excludes the construction of the Link Canals which was forced by partition in 1948.

During the period of maximum development effort the science of irrigation as related to crop water requirements and irrigation demands was in its infancy and poorly understood by civil engineers. Consequently, canals were sized for capacity by using rules of thumb based on experience. In the case of the Indus Basin a water duty concept was developed and used wherein canals were sited using a water duty rate of 1.0 cfs per 100 acres. Although the origin of the water duty rate is not well documented, it probably extends from early measurements of deliveries made in the inundation canals for irrigation during the kharif or wet season. Therefore, irrigation was used to supplement rainfall and did not have to meet the full crop water requirement. It should be noted that the 1.0 cfs/100 acres is for the entire CCA and not the net

irrigated area. The water duty rate is supplied at the outlet to the watercourse so that it includes all ditch and field application losses as well. It appears that the water duty rate was introduced somewhere around 1850 to 1870 although it could have been as late as 1890. Like many other factors in irrigation design in Pakistan, it has never been changed to meet modern day concepts and technology.

The engineers who designed and built the irrigation systems in Pakistan were providing facilities to undeveloped lands. They recognized that only part of the CCA would be fully irrigated and that there would be waste areas. They wanted to serve as large an area as possible in order to settle a large population. Finally, they recognized the limitations of the water supply available in the rivers, both in the kharif and rabi seasons. Those three concepts had a major effect on the design of irrigation canal systems, particularly canal capacity.

The water duty rate used to determine canal capacity also required the canals to be operated at a continuous flow rate throughout the irrigation season. Continuous flow requires the smallest canal capacity to provide a fixed volume of water during a given period of time, say a month. Therefore, continuous irrigation provides the lowest initial capital cost. Continuous irrigation also satisfies one of the farmers basic needs; to see the water entering his farm or available in the canal and watercourse. Continuous flow systems provide managers with the simplest form of canal water management. All the canal officer has to do is be sure that water reaches the tail cluster in the required amount. With proportionality designed into the outlets and control structures, the system will essentially operate itself. What the canal officer quickly learns, is that the system is not self operating when rigid rule enforcement and punishment is relaxed because the people problems rapidly multiply and equitable distribution quickly ceases. The system still operates with a minimum of effort, but the sociopolitical pressures are immense. Poor maintenance further reduces the canal officer's potential options since freeboards are gone and inflows must be carefully controlled. Water utilization and cropping intensity rapidly accumulate at the headends.

The engineers also introduced the grouping of several distributary and minor headworks at a single cross regulator. This reduced the cost of canal structures but more importantly it reduced the number of gate tenders and telegraphers/signalers required to operate the system. Each system might require just 6 to 8 control points. The longer lead required on some canals to reach the command area was a small cost when spread over many years. Communication was an important consideration because many systems were constructed without escapes or wasteways.

In order to accomplish the design objectives with a limited water supply, the kharif intensity was kept low by using a low kharif full supply factor which sized the watercourse outlet in terms of a flow rate. For example; according to the "Manual of Irrigation" a kharif full supply factor of 55% and kharif intensity of 30% would provide the following allowance:

$$\frac{1000}{FSF} \times \frac{KI}{100} = \frac{1000}{55} \times \frac{30}{100} = 5.45 \text{ or } 5.5 \text{ cfs/1000 acres}$$

A CCA of 467 acres would have an authorized discharge capacity of 2.57 cfs. The rabi season intensity was assumed to be twice that of the kharif season. Originally this meant that one-half as much water was required in the rabi season to irrigate the same area. With the advent of storage reservoirs, the rabi season allowance is about 80% of the kharif season which irrigates the same or more area. The allowance varies for each of the 43-canal irrigation systems.

C. Organizational/Operational Limitations

The responsibility of the Provincial Irrigation Department concerns only the conveyance system and ends with the delivery of water to each watercourse. Therefore, what happens to the water after it enters the watercourse is theoretically of no concern to the irrigation system's management. In reality, management must be aware of the farmer's needs so as to provide as good a service as possible and to look for ways within the system's constraints to improve conditions, particularly equitability and reliability.

Water measurements are not made at the watercourse level. The inflow to each watercourse is controlled only by the outlet structures setting and the elevation/level of water in the canal with respect to its sill level. The canals are alluvial which means they carry bed load material (sediments). There are two major outside factors which can affect flow into a watercourse; (1) sedimentation in the canal and (2) outlet tampering.

The control of sediment in the canal is a function of system management. In the past, removal has been limited and canals have been allowed to rise; in some cases 4 and 5 feet. Desilting tends to raise the canal embankment and latter the water levels are allowed to rise. As the upstream water levels increase, the flow to the tailend decreases. Eventually, the outlet must be reset (raised) or flow to the tailend ceases. The resetting of outlets becomes a social problem.

D. Sociopolitical Realities

All irrigation system officers are fully aware of the sociopolitical or people problems associated with operating and maintaining a system. The political pressures usually manifest themselves in the inability of irrigation officers to enforce rules and regulations equitably. Social pressures manifest themselves in outlet tampering, outright theft of water and the refusal to accept outlet resetting as a matter of course. This increases the conflict between headenders and tailenders. As the canal water surface rises, the headenders receive more water which means either higher yields (less water stress) or a larger irrigated area. Naturally, farmers are reluctant to accept a reduction. The tailenders seldom have sufficient influence to help their cause. There has been a tendency to increase the flows into the canal systems in an attempt to help the tailenders. Without resetting, this policy only aggrevates the situation.

In general, this manual is limited to the technical facets of system operations. The sociopolitical problems lie in the field of discipline and enforcement which are the purview of Government. The basic means and infrastructure are in place.

E. Changing Water Management Concepts

Under the guise of improved water management a host of recommendations have included the concept of "delivering water in response to crop water requirements". The concept is a basic tenant of irrigated agriculture under appropriate field conditions. The constraints of a critically short water supply and a complete lack of canal capacity to meet the objective are often not considered. The water management concept which should be implemented is to match the crop water requirements to the available surface water supply, improving the reliability and equitability of the supply, effective reduction of losses, improve crop water stress management techniques and conjunctive use of ground water using small private wells. There are a host of other water saving techniques that fit into the above concept.

Except for flood flows that occur during three months of the year, the Indus Basin river water is fully committed. This means that supplying additional water to one canal requires that it be taken from another. As pointed out elsewhere only enough water was supplied for 27 to 50% of total cultivatable command area, CCA at the barrage controlling the canal system.

The total cultivatable command area is given as 34.5 million acres but includes 5.0 million acres of waste land, leaving 29.5 million acres potential. The net irrigated kharif season area in Pakistan is unknown but will range from about 9.0 to 16.0 million acres. The term net irrigated area refers to the exact amount of land that receives irrigation.

It is currently estimated that at least 50% of the water diverted at the barrage is never used to satisfy the crop water requirement. The silty-sandy soils that make up the majority of Pakistan soils have high infiltration rates and low moisture retention levels. These soils are not conducive to high irrigation efficiencies using poor techniques.

Assuming 0.5 cfs is available to the crop in the field i.e., 43,200 ft^3 or one acre foot 43,560 ft^3, which is equivalent to 0.12 inch per acre slightly less than 1/8 inch/acre. The peak period evaporation rate in May and June is 0.4 inch per day in central Punjab increasing to 0.5 inch in Southern Sind.

Fortunately, the peak irrigation demand crop wise does not occur in the May-June period although the peak land preparation irrigation requirement does. The peak crop irrigation requirement would be in September-October and would average about 0.24 inch/day. The above would indicate a net irrigated area on the order of 50% of CCA. Punjab statistics show the net irrigated percentages as follows:

Kharif	44.5%
Rabi	51.0%
Annual	95.5%

The above also includes the effects of ground water in meeting irrigation demands. The Sind figures would be somewhat less due to higher concentration of sugercane and rice which would reduce the net area due to high demands.

The comments is often made that with the 365-day growing season that 3 crops could be grown per year. This is true and the practice is used to some extent although 2 crops per year is far more common. The problem with the statement is that there is little water available to grow the third crop. Currently in the Punjab about 7.8 million acres is double cropped with another 2.4 million acres in permanent crops leaving a maximum of 6.75 million acres that is single cropped. There is no information available on what percentage of the double cropped area is rotated to fallow or single cropping each year.

F. Definition of Operation Procedures

There have been many definitions of the operation of an irrigation system. The one presented herein has been adapted to conditions in Pakistan and fits the overall management system presented in Volume 1 of this series and carried out and supported in the other three volumes. Operations refers only to the movement of water through the conveyance system from the time it enters the headworks until it is delivered to the watercourses. The original method installed is still in use today with only minor changes and a few more constraints. The system was designed to be operated with a minimum of

water control, little need for communication and transportation, ease of operation and a low construction cost. Hence the continuous flow system with uncontrolled outlets to provide equitable (proportional) delivery.

The operating procedures required were minimal and the major emphasis was on "delivery". Operations consists of six basic procedures namely:

* Scheduling
* Delivery
* Monitoring
* Evaluation
* Adjustment
* Accountability

Scheduling is primarily planning for the delivery of water that is the determination of demand for each day or week of the year. Delivery is the actual delivery of water to each watercourse and making all necessary adjustment/compromises in equitably distributing the available supply to meet the demand. Delivery includes the rapid changes or adjustments required to meet heavy rainfall or wet field conditions. Monitoring reflects the continuous checking and recording of conditions within the conveyance system. Evaluation is the comparison or analyses of conditions with respect to meeting the operating standards and goals of the system. Adjustments refers to making changes and improvements in the operation of the system to reduce cost and better meet its standards and goals. Finally, accountability refers to providing the water users information on how well the system is performing.

The above procedures fit the original statement of orders originally published although most of the terminology is new. Scheduling was easy. The demand was the design discharge delivered during the kharif season, 15 April to 15 October. The demand in the rabi season was either fixed at some percentage of the kharif demand or left to Allah.

Since there were no storage dams of consequence, all barrages operated on a run-of-river basis and according to the distribution percentage assigned. Run-of-river operation was and still is under the ancient actage; use it or lose it. Today the two major reservoirs Tarbela and Mangla have greatly altered the conditions. Even now there are times it can still be applied although reservoir releases are controlled; hence the flow in the Indus and Jhelum Rivers are controlled for roughly 9 months each year. Therefore, inflows to each canal are more regulated and more uniform or constant with time.

Delivery adjusted the available flows in the past on a relatively equitable basis. Today the flows can still be adjusted on a reasonably equitable basis at most water control structures. Outside pressures are exerted more today but still have only a limited influence on the division of water at control structures. The final test of any irrigation system is at the tail cluster. If the watercourses located at the tailends of a system canals received their allocated (sanctioned) flow the system is obviously well operated.

Section 3 : Scheduling

A. Introduction

There are many facets to irrigation conveyance system operation. They are interrelated but all deal with the primary object; to deliver an equitable supply of water to each and every watercourse outlet. System operation can be defined in the following context:

* Scheduling
* Delivery
* Monitoring
* Evaluation
* Adjustment
* Accountability

Each of the above components of operation can be further defined and subdivided.

Scheduling - is a synonym for planning. It involves the determination of how much, when and where water should be delivered. As such, it involves the determination of crop water requirements and then irrigation demands, schedules the irrigation demands on a weekly basis, forecasts water availability, prepares alternative options and re-examines and adjusts the schedule periodically.

Delivery - involves the physical distribution of water to each watercourse in the system. It is the hour-to-hour and day-to-day movement of water throughout the conveyance system. The scheduled demand must be balanced against the actual flow available. The available water is then allocated according to predetermined criteria. This process is repeated downstream at all cross regulators or divisions of flow. Various delivery strategies are used to move the allocated water through the system.

Monitoring - is essentially record keeping an the processing of collected information or data into a form that the canal officers can use to evaluate the operation of the system. Discharge and water surface elevations are the two main measurements recorded. Discharge records are used to determine and show accountability hence equity. Water surface elevations are also used to determine equitability as well as changes in system operation, primarily sedimentation.

Evaluation - is the comparison of records over the long range to detect changing conditions. The actual records are compared to the demands to determine equity and provide accountability. The results of system performance are compared with the goals. Changes and improvements are defined and recommended.

Adjustment - is making the recommended changes in the operating procedures as well as adding improvement to the system. Converting stoplog control to gate control or resetting outlets are

31

forms of improvements. Desilting would be the most common change. Small changes in allocations to meet measured seepage losses is one change that would concern delivery based on evaluation of records. Systems can not remain static. Improvements or changes must be made to meet the ever changing needs of the farmers.

Accountability - is providing the people with the knowledge of how the water is being distributed and who is getting what. The posting of delivery records, calibration records, informing people of what is happening and why are all forms of accountability. Accountability is vital to safeguard people's rights.

B. Role of Scheduling

Scheduling is method of planning the delivery of irrigation supplies long before they are required by the farmer. In Pakistan there is very little flexibility available to schedule water. All the canals have a fixed capacity and the available water has been allocated according to a priority system based on prior rights and canal capacity. Supplies can be decreased but there is little room to increase them the above stated canal capacity.

The available water supply in the Indus Basin has already been over appropriated/committed to meet the present design intensity. Satisfying peak crop demands of the entire CCA is physically impossible due to the capacity constraints already imposed on the system. Even if one assumes that the actual irrigated area is based on the kharif irrigation factor, say for example 55%, that 5.5 cfs will meet the peak crop requirements on 550 acres of irrigated land when delivered to the watercourse outlet. Crops can and would be grown on the full 550 acres but chances are good that the yields will be reduced due to water stress occurring at one or more periods during the crop growth cycle. At a very minimum, 40% of the 5.50 cfs delivered to the outlet will be lost to the crop due to seepage, deep percolation and other losses. This leaves 3.30 cfs or 0.14 inch (9/64-inch) of water spread over the entire 550 acres each day. This is less than half the peak water requirements of most crops grown in the kharif season. Fortunately, rainfall will supply part

of the demand and the peak requirement seldom lasts more than a few weeks. This is where stress management at the watercourse level will become more important as time goes on and farmers try to increase their real cropping intensities.

Today there is more scheduling done by the Provincial Director of Regulation and his counterpart at WAPDA than at any other level. These two people continuously monitor reservoir conditions (remaining volume and surface elevation) against the power and irrigation demands being placed on the reservoirs. Irrigation demands are made and adjusted to fit all other sources of water in the system and the releases are made as accordingly. Each barrage then adjust the headworks to each canal as instructed. All this has little or no effect at the lower end of the system except for the adjustments made to continually prorate the distribution equitably.

Scheduling in mostly limited to periods of low demand when the local farmers do not require nor want water delivered. some of this reduction can be handled in the watercourse and if enough farmers want a reduction it can be handled and adjusted for at the canal level. Since this condition would tend to occur at about the same time each year, the canal officers can predict and schedule for the reduction. If during the same period of time, other canals wanted additional supplies this could be accommodated provided freeboard existed to carry the extra water. The minimum freeboard criteria can not be violated.

C. Preparing an Operating Schedule

Each canal system and sub-system needs detailed scale maps showing the general topography; all irrigation and drainage channels; roads, trails and other physical structures; along with all cropped lands served by these channels. Even more important but extremely difficult to produce would be to delineate the actual irrigated areas as well as CCAs. This is important because only 25 to 50 percent of the CCA receives water in any given year. Information on the permanency or the rotation of the area actually receiving the water should be known. Too much attention has been focused in the past on the CCA and nothing on the net irrigated area.

Data located on the maps can be transferred to schematic diagrams of the system or sub-system. It is important that all structures in or along each canal be located and shown on the schematic. It is important to identify the location of each structure by its RD. All bridges must be shown as they can be used as control points. Schematics are very useful for operations. Maintenance requires maps because they show scale and layout. The design discharge or canal capacity for each reach and each structure must be defined and placed on this or a separate schematic diagram.

The maps and/or schematics provide the basic tool for developing an operation plan. Water delivery schedules can be calculated for all points within the system. Determining the flows at each water control structure enables the canal officer to determine the split or division of water between canals. The water control structures serve a limited use if they are not rated so that water can be actually measured into each offtaking canal. Many water control structures have a stage-discharge curve that was prepared sometime in the past. Usually by the design engineer. Because of many factors, explained in detail in following chapters, these discharge curves or tables may not be very accurate. All water control structures must be calibrated for the full range of flow conditions that exist at each structure.

A simple operations plan can be prepared on paper with a methodology for establishing irrigation requirements for each outlet/watercourse served by the conveyance system. By knowing the canal losses in the canal between water control structures and control points along each canal, the discharge requirements can be calculated from the tail cluster to the canal and then the system headworks. The remaining data that is needed is the time it takes from the time the change in discharge is made at the headworks until it reaches each control structure within the system. The travel time can be estimated by the equation:

$$TT = L/3600\ KV_a \qquad (2.1)$$

40

where

TT = travel time is the length of time it takes a change in flow rate to go from point a to a point b in hours,

K = velocity adjustment factor,

V_a = average velocity in reach between point a and point b, in ft/sec, and

L = length of reach, in feet.

The value of K will vary between 1.0 and 1.6 depending on local conditions. Consideration must be given to the canal filling and dewatering criteria when scheduling; particularly for rotation irrigation when a canal goes from empty to full or full to empty. Normal changes in canal discharge to meet irrigation demands are seldom large enough to cause the drawdown criteria to be considered. Drawdown can not exceed one foot per day and should be incremented for a change this large.

Implementation of an operation plan requires the use of fully calibrated canals including a stage-discharge relation at all structures, measured canal seepage loss rates and measured travel times between water control structures, particularly cross regulators. Calibrations have not been made in irrigation systems in Pakistan.

The irrigation systems in Pakistan have the simplest operation schedule available as they use continuous flow. There are two irrigation seasons, kharif and rabi which correspond to the wet and dry climatic seasons. All canal system are operated at design capacity during the entire kharif season if supplies are available. Reductions may or may not be made at the end of the season for harvest. In the rabi season perennial canals will be operated at some percentage of the design capacity depending on the individual system's priority and historic right as well as the available and/or allocated water supply. Non perennial canals are not operated during the rabi season except for three, 7-day issues of water made for sowing, growing and grain filling if the water is available.

At the present time, a modified outlet register is used to determine the sanctioned outlet capacity and canal capacity between outlets and/or water control structures. The outlet capacity is determined as described in Chapter II.2.B. The term modified above refers to the direct calculation of losses and canal capacity on a register listing, an example is shown in Table II-1. The loss rate used is also described in Chapter III.2.E.3.

Any canal system wherein the tail cluster(s) receive their sanctioned supply are extremely fortunate. A major fallacy in the PIDs is that the canal officers believe an untampered outlet will discharge into a watercourse the amount specified in the outlet register. Also, tampering is believed to change the discharge by only 10 to 20 percent and seepage losses are equal to 10 percent of the flow.

There are many canals wherein the tail cluster does not receive its sanctioned flow, receives water only intermittently or never receives water. Obviously, when the tail cluster does not receive its sanctioned flow, the canal is not being operated equitably. Calibration of two test reaches, one in Punjab and one in NWFP are shown in Tables III-1 and III-2. The deviation between the design discharge and measured discharge can vary up to 300 percent or more. The data in Tables III-1 and III-2 do not reflect tailend conditions.

Section 4 : Delivery

A. General

Operation deals with the delivery of water to all the farmers. There are many operating strategies that are used in irrigation systems. These include:

* Continuous flow
* Proportional flow
* Rotational deliveries
* Demand deliveries

All of these strategies can be used at one time or another in the seasonal operation of an irrigation system or sub-system. No one strategy works all

the time and they all require continual changes or adjustments. The operation of a run-of-river system wherein the river flows are in a continuous state of change, increasing or decreasing, is a difficult and challenging undertaking. The time that a river will maintain a constant flow is always short.

The operating modes or strategies are defined in terms of the canal systems in Pakistan as follows:

Continuous Flow - A continuous measured flow into a canal and its downstream branches. The flow rate may be adjusted according to seasonal demand or other local conditions, usually based on availability. Individual canals may have a flow rate based on its own needs.

Proportional Flow - The division of the available flow (usually continuous) equally between all canals and/or outlets according to service area of sanctioned allotments. The available flow is always subdivided by the same percentage.

Rotational Delivery - A method where the available flow is delivered to one or more distributary canals for a period of time then shifted to other canals, depending on service area and/or demand. Used primarily during periods of low flow or availability.

Demand Deliveries - Refers to the SDO's or WUA's right to request additional amounts of water or to ask for reduction in delivery to a distributary canal. The request for additional water would be honored provided there is water available and canal capacity to carry it.

B. Operating Modes

Conveyance systems in Pakistan were designed to be operated at design capacity over long periods of time. The discharge is varied due to the availability of flow at the barrages or during the rainy season to prevent

ponding or drainage problems and during harvest periods at the end of the kharif and rabi seasons. Since the deferred maintenance policy of Pakistan has eliminated freeboards to a point where small increases inflows may cause breaching of embankments freeboards cannot be encroached on. Even the simple act of a few farmers closing watercourse outlets can cause downstream breaches.

1. Continuous Flow

Continuous flow is the distribution of water at a continuous rates over relatively long periods of time. In Pakistan the flow at design FSL may extend over several months with no change but is dependent on availability. The period would not exceed six months. The kharif season generally requires a flow equal to the design capacity whereas the rabi season generally will receive flows on the order of 50 to 80% of design depending on the system. The nonperennial canals seldom receive rabi season flows except of the designated times allowed in the Punjab.

In some cases, it would be to the farmers advantage to reduce watercourse flows during the two major harvest seasons. When the demand for water will be low. The size of the reduction would depend on the cropping pattern(s) developed in each system or sub-system. Regulation could be made at the distributary level with appropriate planning and coordination with the watercourse.

The need for increased flows during the peak crop water requirement periods, which can not be supplied by the canal system without reducing the cropping intensity, is being met primarily by private sector tubewells. Although there are areas where the Government's SCARP tubewell program provide all the water for irrigation, the majority provide supplemental water to the base flow provided by the canals. The private tubewells provide supplemental water during the peak crop water requirement periods thus allowing farmers to increase their cropping intensities to nearly 300% in a few areas.

The main problem associated with continuous irrigation deliveries is during periods of heavy rainfall. It is during these periods when farmers are having

problems of drainage or direct runoff or even more likely standing water in their fields that they will try to close off the watercourse outlets. There are no wasteways and very few escapes in the conveyance systems. Escapes are gate controlled and often located near the head end of a system. A gate controlled escape requires someone to travel to it and physically open the gates. Even assuming this occurs shortly after the problem is recognized, it could take a day or longer before the effects reach the tailend of the system. Intermediate escapes would shorten the response time.

A major problem with the above policy could be increased bank caving. The rapid dewatering of canals should be avoided to prevent bank instability and potential bank caving which is a form of slip-circle failure. In other instances, the reduced water levels allow wave wash damage on exposed sandy layers in the berms or canal banks.

Wasteways are low lined sections built in canal banks that allow rises in the canal water surface level to spill and be carried off to natural drains. These facilities are not used in Pakistan. Unfortunately, the lack of adequate freeboard makes for considerable mileage of unintentional wasteways since canals are not lined, a rise of a couple of inches will cause water to flow out of the canal. If the velocity of the overflow is sufficient to move soil particles, a breach will occur given sufficient time to develop. Because soil compaction during construction and repairs is not performed, the soil particles are easily moved by flowing water. Water buffalo trails/cuts are major causes of loss of freeboard.

Alluvial canals should not be operated at discharge less than about 50% of design. There is some leeway in this depending on individual canal systems. Low flows cause excessive siltation. When the demand or available flows are reduced to 50 - 60% range of design capacity rotation distribution should be initiated.

a. <u>Advantages</u>

(1) Minimum size canal, therefore cheaper to build.

(2) Minimum operational problems.

(3) Farmers satisfaction, water is there to see and use.

(4) Can serve a large number of farmers with minimal administrative problems.

(5) Minimum communication network required.

(6) Easy to operate where travel times within the system are long.

b. Disadvantages

(1) Flexibility is limited by capacity constraints.

(2) Irrigation schedule in watercourses fixed to rigid periods.

(3) Places administration of water deliveries on users; small amounts to everyone or rotational deliveries.

(4) High seepage losses.

(5) Constant attention by farmers if deliveries are continuous.

(6) Difficult to adjust during periods of heavy rainfall.

2. Proportional Flow

Proportional flow is the division of water based on some form of proportionality. Normally this would be based on area (CCA) but other criteria can be included. Rice or banana areas can be allowed additional water. The method is often incorporated into a continuous flow system.

Proportional flow systems are usually designed and constructed in such a way that the proportionality is permanently fixed and can not be varied seasonally. Seasonal variability between two canals is usually a demand consideration. The design and setting of water courses is a form of proportional flow. Minor canals heading on a distributary should be served by a division structure that divides the flow proportionally between the minor and the distributary if there are a series of outlets offtaking the distributary upstream of the division point. A gated control structure would allow all the upstream watercourses to receive a continuous supply while those below the structure would receive rotational.

Where proportional flow structures are used in a system, rotational irrigation can only be accomplished at upstream gated control facilities.

a. Advantages

The advantages of the proportional flow systems are:

(1) Simple structures with no moving parts.
(2) Minimal operating staff.
(3) Equitable distribution of all supplies.
(4) Divides water equitably without upstream ponding.
(5) Cost effective, low construction - low maintenance.

b. Disadvantages

(1) Can not be used in alluvial systems where flows will drop below 50% of design except at tailends due to sedimentation problems (operational not structural causes).
(2) Inflexible, difficult to vary proportions between seasons.

3. Rotation Distribution

Rotation irrigation, as practiced in Pakistan, is the distribution of a limited supply of water between branch canals and/or distributaries on a rotation basis. The conveyance system is divided into two or more units or sub-divisions that can be controlled by cross regulators and gated head regulators. Each unit or sub-division must be isolated so that all the branches within it receive water at the same time. Each unit or sub-division receives water on certain days during each rotation period. Those days in which the reach receives water are called the on-periods or the working period. The remaining days in the cycle are called the off-period.

There are several variations of rotation that can be utilized to fit local conditions. These are:

(1) Rotation based on the number of turns; i.e., 2-turn or 3-turn rotation. In 2-turn rotation, the area served by the main canal and its branches, is divided into 2 equal parts, to be irrigated one after the other, whereas in 3-turn rotation the area served is divided into 3 equal parts.

47

(2) Rotation based on the duration of rotation period, the number of days on and the number of days off.

(3) Rotations based on the season of the year and the crops grown.

(4) Rotations based in the ability to measure and control water within the system.

(5) Rotation based on equitable deliveries.

The type of rotation depends mostly on the ability of a system to measure and distribute water to all parts of the system. The less sophisticated the system the simpler the method of rotation must be in order to achieve a reasonably equitable distribution. Equitable distribution being defined as everyone receiving exactly the same number of inches of water per acre at his head gate.

A severe limitation to rotation irrigation in Pakistan is the fact that there is only limited water control below the distributary level because all outlets to watercourses are uncontrolled; i.e., they have no gates. This makes it difficult to deliver partial capacity flows to the tailend of the distributary or rotate water between minors because upstream outlets will always be supplied. The same holds true for branch canals except they usually have fewer direct outlets.

The rotation system is not well adapted to canal systems using stoplogs and free offtakes because of the inability to control deliveries. Where the stoplogs can be pulled so that the water level in the canal drops below the offtaking canal sills, rotation can be instituted so long as the leakage through the stoplogs and structure does not reduce the sanctioned flows being delivered to the offtakes. All offtakes controlled by the cross regulator would have to receive water at the same time.

a. <u>Number of Turns</u>

The number of turns method usually is limited to two or three turns depending on the individual canal system and/or sub-system to be subdivided

into equal parts. The layout and location of water control structures must be studied in detail in order to arrive at a fair system of distribution.

b. Duration of Turns

The duration of turn must be limited to periods short enough to limit moisture stress in the crop. Soil moisture holding capacities crops and seasonal climatic factors should enter into determining the duration of a turn. An example of this is as follows:

* 2-turn rotation (7 on days and 7 off days) for cotton areas
* 2-turn rotation (4 on days and 4 off days for rice areas
* 3-turn rotation (4 on days and 8 off days) for most crops in the summer (kharif) season or
* 5 on days and 10 off days in the winter (rabi) season.

The combination of the above is used extensively in Pakistan where water measurement is not a fully established and utilized practice. Water surface elevations have more meaning in terms of system operation than actual discharges. In a 3-turn system, rotation is often initiated when flows reach 2/3 of the full supply so that two out of three service areas receive a full supply while the third remains dry. Similarly, a 2-turn system may wait until the 55% of full supply level is reached. Rotation could be initiated earlier, with the residual from the fully supplied area being released to the dry or remaining area. Small residual releases can not be effectively used so that much of it lost.

A similar pattern may be used during start up periods when the scheduled rotation unit, receives all flows up to full capacity with the remaining water going to the next rotation unit in the schedule. This is a very simple rotation to administer and does not require water measurement; requiring only minimal scheduling and a fixed rotation period.

c. Variable Areas

The variable area method will accommodate irrigation systems with each distributary serving a different size service areas (CCAs). It requires that

rotation periods be of different lengths of time in order for each distributary to receive its equitable share. The method is based on variation of the equation:

$$\text{Duration } D = \left[\frac{a + b + c}{a + b + c + d}\right] \frac{t}{n} \qquad (2.2)$$

Where

D	=	duration of a rotation period - hours
a....d	=	service area of each distributary - acres
t	=	duration or irrigation cycle - hours
n	=	number units areas irrigated at one time.

The irrigation cycle is normally set to 7 or 14 days although other time periods can be used so that t = 336 hours for a 14-day cycle.

Exhibit II-1 provides an operational scheme using the variable area method of rotation irrigation. The limits that initiate rotation and change types of rotation should be set according to conditions in each canal system.

Variation in flow patterns expected as well as variation in the service area of individual distributaries may require adjustments in the limits defining modes of operation.

d. <u>Variable Discharge (demand)</u>

The variables discharge method is based on the crop irrigation requirements in each rotation unit area. It is well adapted for use at the watercourse level because their could be considerable variation in demand between watercourses. It is not well adopted to Pakistan for several reasons. The sandy-silty soils require frequent irrigations, watercourse outlets are uncontrolled and unmeasured, and the canal system has only a few control points located within it. Also, distribution equity is based mostly on CCA. The biggest constraint is lack of canal capacity. With freeboards of the order of inches, there is no room to increase flows into a canal.

Rehabilitated canals with the freeboard replaced would have the capability of handling discharges of up to 120% of design capacity for periods up to two weeks provided sediment deposition had not reduced canal capacity. Therefore, when extra flow was available it could be rotated or sent to those distributaries with the greatest need. The potential for abusing the equitable distribution of water in rehabilitated canals is considerable.

The poor data base for estimating demands design constraints, lack of water control facilities and the potential for abusing equitable distribution will tend to make the distribution of water based on any form of crop needs even more unequitable than is the current practice in the canal systems. At the watercourse level, discipline, training and cooperation may be good enough to modify the traditional waribundi rotation system now in effect. In this case, the duration time of each turn could be adjust somewhat to fit the critical stress period of crops being grown under a given nukka. For example, this week a little extra might go to area A because the major crop is corn (maize) and it is just starting to silk. Next cycle the flow to area A is reduced and increased to area B for some other crop. Watercourses, like the canal system, lack sufficient controls to do much more the change the nukkas from open to shut.

The discharge to each watercourse is sanctioned which in turn set the design discharge for each distributary. The most equitable method of rotating flows would be to account for all losses within the system down to the distributary and then proportion out the remaining water to each distributary in the rotation unit. Flows would also be divided equitably between rotation units. Exhibit II-2 is an example of this method based on a representative Pakistani Irrigation System.

e. <u>Advantages and Disadvantages of the Rotation Method</u>

<u>Advantages</u>

(1) A minimum communication network is all that is required to operate it because it can be operated on a scheduled/forecast basis.

(2) The off period reduces the water level in the canals to near zero and thus, its contribution to the water table will be reduced.

(3) The on period where the canal operate at full capacity allows the outlets to the watercourse to receive their designed allowance.

(4) The rotation basis for delivery is believed by some to reduce the overall water requirement and thus reduce the required cross-section of the main conveyance canals.

(5) The frequent off periods help to reduce weed growth in the canals and thus the cost of maintenance.

(6) Farmers are freed from irrigation chores during the off periods.

(7) Additional time is available during the off periods to perform maintenance functions instead of leaving them all to the annual or normal maintenance closure period.

(8) Reduction in sedimentation problems by supplying design capacities during low flow periods inflows less than 55% of design discharges.

Disadvantages

(1) For handling design discharge the canals require large cross-sections because they must have the capacity to carry two or three times as much water as they would on a continuous flow basis because they must deliver the same volume of water.

(2) The constant starting and stopping of flows may cause excessive bank damages. Particularly where sandy layers exist in the banks or the soils have very little cohesive strength.

(3) Some crops may need irrigation more frequently than the frequency of rotation or less in other cases.

62

(4) The planting irrigation may have to be delayed several days until the next rotation. Similarly, water may be delivered when it is not wanted, particularly during harvest periods.

(5) Farmers tend to apply more water than the soil can hold hoping it will last through to the next on period.

(6) Leaves pools of stagnate water in canals to breed insects and other disease carrying creatures.

4. Demand Irrigation

The demand system described here in is a controlled system based on average crop requirements. All deliveries to farmers or watercourses are controlled by the canal officers. It is not a free demand system where the farmer can do what he wants whenever he wants.

A demand irrigation system normally has sufficient capacities to meet the peak irrigation demands of the service area. The demands are based on a presumed or estimated cropping pattern, crop calender, and crop water requirements. The peak demands will generally occur in a single month or possibly it will be stretched over a two-month period. The larger the service area the longer the peak period may be. The canal is then designed to meet this demand. The resulting capacity requires a large expensive canal that operates at full capacity for 8 to 15 percent of the year. A method sometimes used to increase the usable capacity of the canal and thus reduce the design capacity and cost is to allow part of the peak demand to be carried on the freeboard.

The above system may still have internal constraints on sub-system or individual canals as the real peaks may still exceed capacity including freeboard encroachments. This depends mostly on the cropping pattern served by individual canals. The constraint in capacity may also serve to alter a farmer's cropping pattern to one where water will not be in short supply during the critical period in the crop growth cycle.

The demand system must have all water control structures gated. Gated cross regulators allows the system to be operated with water levels being maintained within close tolerances. Water can be delivered in any amount to any canal so long as the travel time is accounted for and the water is available.

The above system works well in non-alluvial canals where sediment is a minor problem. In alluvial canals, the full depth and backwater curve would reduce velocities considerably in the upstream reaches causing considerable sediment deposition. In Pakistan canals are never allowed to operate at flows less than about 55% of the design discharge. The long periods of time during the year that the canal will flow at less than design capacity would require that the canal be designed to carry the sediment load at lower discharges. This would require steeper slopes and would reduce the service area. The peak period flows would be capable of carrying more than the sediment load and would tend to scour the system.

C. System Operation

1. General

The delivery of water hence the operation of a canal system depends on four general areas:

(1) Allocation of water
(2) Mode of operation
(3) Infrastructure controls
(4) Systems control

The allocation of water has been covered in previous sections. The outlet register is the basis of the water rights and allocation of water. The sanction discharge accorded by the outlet register are a theoretical right with little basis in fact. Tampering, construction errors, operating water levels have all contributed to the condition that an outlet seldom delivers its sanctioned discharge. Table III-1 was an example of this fact. Therefore, the systems are not really operating according to the regulations. The various modes of operation have also been discussed in the previous section.

The need for calibration and monitoring of the system has been mentioned and is more fully covered in Chapter III. Calibration is required in order to establish a comprehensive systems control. The systems control is established in conjunction with infrastructure or physical features of the canal system. Water control can only be effected where gated or stoplogs are used to control the water surface levels. Flow can be proportioned at non-adjustable structures but the ratio is fixed unless the structure is remodelled or tampered with. Water control to be effective requires water measurement so that precise amounts of water can be delivered to each distributary. Under current design, including rehabilitation/remodelling, water control will be practical down to and including the distributary headworks. Downstream of this point either proportional flow or gate control division would be maintained including watercourse outlets and minor and sub-minor canals.

There are very few outlets which head directly on the branch and main canals. This means that these large canals can be operated to fit the situation within the system, by providing excessive amounts of water to only a few lucky individuals. It may be desireable to provide these outlets with gate control and water measurement in the future.

2. <u>Infrastructure Controls</u>

a. <u>Physical Controls</u>

The water control center is the heart of an irrigation system's operations. The next important link is communications to the various control points within the conveyance system. Radio and telephone provide very short time periods between the control center and the field. Telegraph is somewhat longer because it has to be transcribed. The present telegraph system required a signaler on duty to monitor calls. Automation reduces this to almost an instantaneous response time. Where communication are limited to messenger, the response time is considerably longer, often measured in hours. The location of the water control center is much more critical where communications are poor and unreliable. This is not necessarily a major catastrophe because water does not move all that fast in the conveyance system. Velocities of flow generally range from 2 to 3 feet per second. Variations in discharge can travel somewhat faster than this so water

movement can be considered as moving from 1.5 to 3.1 miles per hour. This is easily within the rate of a person walking and a bicycle would be much faster.

The physical controls are the cross regulators and the headworks for the branch and distributary canals. Most systems have only a few regulation control regulators. The rest are considered minor with regard to the system in operation. A series of individual headworks for small distributaries heading on a main or branch canal are an example of what are considered to be minor control points. The cross regulator that interrupts the flow is important to system operation, not only because it will control the outflow to several distributaries at one point but because it interrupts the flow in the main channel. Improper operation at this point can have major consequences at both upstream and downstream locations.

There are few safety factors in Pakistan's conveyance system that can protect the system from mismanagement of water. Escapes are the major safety value but these have one major drawback, they are manually operated which means a person has to be dispatched to a particular location in order to open the gate(s). Even if a person was to be stationed at the escape, it is doubtful that he would be awake and present at the time of need without some sort of communication system. Freeboards, are also a safety factor that are, for the most part missing. The lack of freeboards is one reason for overtopping and breaching failures in distributaries, because even minor increases in flow can not be absorbed in the tailend of these canals.

The physical control are laid out in schematic form. All canals, headworks cross regulators are located. The major regulation control points are obvious. In Exhibit II-2 there are three regulation control points downstream of the head regulator. The rest of the control points regulators are essentially proportional dividers in that they control only the water surface elevation and the offtaking canal responds proportionally to increases or decreases in the water level. This type of control is staffed only by a single gauge reader.

Since nearly all offtaking headworks have cross regulators that control the water level, so that the flow into the canals can be regulated. This is important during periods when the incoming flow is less than FSL because it not only allows equitable distribution but also provides the potential for unequal distribution. A slight lowering of the control water surface level will allow a little more flow downstream. The same potential exists with gate adjustments where several distributaries head on a single cross regulator.

Because of the over appropriation of water throughout the canal system rotation deliveries to small minors or distributaries may be the only way to get water to some parts of the system. Unfortunately at the distributary level, forcing extra water into the headend of a canal may not provide much additional flow to the tail cluster. The ability to get water to the tail would depend on the flexibility of all the outlets starting at the headend. APMs or AOSMs with their sills set at 9/10ths design water depth are subproportional so that a little bit extra would flow on down to the next outlet. Whether water would reach the tailend depends on how may APM's and how many open flume type outlets are in the system. The OF type are hyper-proportional.

b. <u>Flexibility</u>

Because of changes inflow conditions at the original source of water at the controlling barrage and subsequent adjustments and changes at intervening water control structures the incoming flow Q at a canal bifurcation may increase by a small amount Q' to Q + Q'. Because of this increase in the incoming flow, the water level upstream of the cross regulator will rise slightly. Depending on the sensitivity S of the structures controlling the flow continuing downstream and that diverted in to the offtaking canal, the small change in flow Q' will be divided into 2 parts;

(1) Q'_s, flow continuing down the supply canal; and
(2) Q'_o, flow entering the offtaking canal.

$$Q' = Q'_o + Q'_s$$

57

Therefore, the term flexibility, F, is used to describe the relative change flows and is deferred as:

$$F = \frac{Q'_o}{Q'_s} \times \frac{Q_s}{Q_o}$$

Where Q_o and Q_s are the original flows in the offtaking canal and supply canal respectively when the incoming flow was equal to Q.

The division of water at a canal bifurcation can be classified according to flexibility as follows:

$F = 1.0$
$F < 1.0$
$F > 1.0$

a. **F = 1.0**

When F = 1.0, Q' will be divided into Q'_o and Q'_s in proportion to the flow rates Q_s and Q_o. Exhibit II-3 illustrates two cases. Case A indicates what would happen to the original flow rate if a gateman closes offtake No. 1 and sets Offtake No. 3 to the wanted $Q_{o,3}$ = 100 l/s while offtake No. 2 is not adjusted. Because the incoming flow at No.2 increases, $Q_{o,2}$ and $Q_{o,3}$ will increase proportionally. As a result the offtaking canal at No. 2 will increase with $Q'_{o,2}$ = 11 l/s. It is clear that unless the gate controlling offtake No. 2 is not adjusted the water supply in the various canals changes appreciably.

If a canal bifurcation must have a flexibility of F = 1.0 for various incoming flows and related heads, the structures on the continuing supply canal and on the offtake canal must have controls of the same shape and their sills must be set at the same level.

b. **F < 1.0**

When F < 1.0, Q' will be divided into Q'_o and Q'_s wherein Q'_o is proportionally small with respect to Q_o. Thus most of Q' will remain in the continuing supply channel as illustrated in Exhibit II-4, Case A, for a

flexibility of 0.1. Case A has the same conditions as described above except now $Q'_{0,2}$ = 1 l/s which is only a 1% change and barely within the accuracy with which discharges can be measured. Where existing structures at bifurcations have low flexibilities. There are some operating advantages and an inherent problem. The advantages are that flows diverted into offtake canals are little changed with relatively large variations of flow in the supply canal and would not require a gateman's attendance. A second advantage is that tailenders would tend to receive additional water. This increased supply arriving at the tailend could be sufficiently large so as to cause overtopping.

Flexibilities of the order of F = 01 will occur where flashboards (curries or needles) or a weir is the water control structure in the continuing supply canal and the offtake is a free intake or with gate control.

c. <u>F > 1.0</u>

When F > 1.0, Q' will be divided into a Q'_0 and Q'_s of which Q'_0 is relatively large with respect to Q_0. Thus a relatively small part of Q'_0 will remain in the continuing supply channel as illustrated in Exhibit II-5, Case A for a flexibility F = 10.0. Case A has the same conditions as previously stated except now $Q'_{0,2}$ = 56 l/s and flow continuing pass bifurcation No. 3 is much less than required. Obviously, irrigation canal bifurcation with large flexibility do not facilitate the uniform supply of water to the various water users and can not be recommended unless gatemen are available to make the needed gate adjustments or the offtake is used as an escape to protect the main channel from overtopping. In this case, the offtake would have to terminate at a drain.

Flexibilities of F = 10 or higher will occur if the offtake is a weir operating under a low head h_u and if the continuing supply canal is equipped with a sluice gate. Flexibilities between F = 1.0 and 10.0 may occur with gated cross regulators and the offtake sills are set up on the canal bank to reduce sediment intake and to minimize the possibility of diverting more than the design flow into the offtake.

d. **Mixed Conditions**

In irrigation canal systems in Pakistan the use of cross regulators was minimized by locating a cluster of headworks at many control points. Under these conditions branch canal, two distributaries and one or two minors could all offtake upstream of the control structure or anyone of several other combinations. The control may or may not be provided by lift gates. Needles or curries are often used to control the water surface levels on ungated open flume distributary canal headworks.

Under these conditions the one offtake canal may have a flexibility of F = 1.0 while others may be greater or less than 1.0. The flexibility numbers are seldom computed. Operators soon learn whether the offtaking canals are unaffected by conditions in the supply canal or have relatively large change in Q'_0. The same is true with the continuing supply canal. Where changes are liable to cause problems, gatemen must be on duty to adjust the discharges according to conditions and orders received.

C. **Travel Times**

The adjustment of discharges at cross or head regulators introduces a condition of gradually varied unsteady flow into the canal. The change in discharge will move down the canal in the form of a monoclinal rising wave. The monoclinal wave is a translatory wave of stable form, i.e., a uniformly progressive wave, that travels down the canal at constant velocity, V_W, from an upstream region of uniform flow having Y, V, and Q, to a downstream region of uniform flow having Y_2, V_2 and Q_2. The depth of the wave front is gradually varied from the upstream section to the downstream section. The slope of the wave front is flat. The profile of the wave front extends over some distance.

The continuity and dynamic equations for gradually varied unsteady flow or the Saint-Venant equation as they are often referred to, can be solved by computer. The average wave velocity, V_W, can be approximately by the equation:

$$V_W = \frac{Q_1 - Q_2}{A_1 - A_2} \qquad (2.3)$$

In this operation of the canal system, calibration can confirm and refine the value of V_W for each reach. The travel time between structures must be known in order to be able to know when to operate the control gates or stoplogs as the case may be. Obviously, the problem is more acute with an increase in discharge due to the potential problem of breaching if adjustments are not made at the appropriate times.

Equation 2.3 indicates that the velocity of a monoclinal rising wave is a function of the water area and the discharge relationship for the canal. This relationship can be represented by a curve as shown in Figure II-1. Since the velocity increases as the area increases, the curve in concave upward.

A similar relationship should be established for a falling canal when the flow is decreased.

Unless the canal in question is allowed to operate at discharges less than 50% of the design discharge, $0.5Q_d$, the lower end of the Q_d curve is not required.

3. System Controls

System control refers to flow regulation but it carries it one step further because it is based on complete calibration and water measurement down to the distributary and minor canal level where the minors head on a branch canal and partial calibration downstream of the distributary headworks. The canal system is operated according to a set of rules. The system can be modelled. The model can be operated using hand calculators or it can be programmed for use on a mini computer. Programable calculators would be more than adequate for individual canal systems in Pakistan. Exhibits II-2 is an example taken from a non perennial system in the Punjab. Although there were more than 800 outlets in the system, to model the system at the distributary level leaves only 7 outflow nodes and 3 control nodes in the model. In addition, the amount of data required for such a model would not

61

be overwhelming. Such a model could slowly be expanded to include minors and subminors as time allowed and the need was apparent.

a. Flow Regulation

Flow regulation must be based on some kind of logic. This logic would provide the means for determining the best of several alternatives for any particular situation. The logic must fit the physical system's constraints/ limitations. Currently systems rely heavily on the judgement of an experienced individual to control branch and distributary canal discharges. This is not necessarily a major problem due to the current system's operating criteria of passing a continuous, nearly constant flow during most of the irrigation season. The continued reliance on human judgement alone, no matter how highly skilled and experienced, is bound to result in suboptimal solutions or abuses. There are methodologies available that can improve on this decision making process.

There are two distinct logic concepts which can be employed to control a conveyance system; deterministic or probabilistic. For the deterministic case which is the basic method used in Pakistan, the demand for water is known in advance. The water is routed through the canal system to assure that enough flow is provided at every control point in the system. The important consideration is to assure that no distributary ever receives more than its discharge capacity to prevent overtopping of the embankment. Such a system requires minimum control of water and manual gate operation is used due to long time period of regulation. Rainfall adds a problem to this method. Hydraulic modelling could be used to determine the best regulation procedure based on the evaluation of several control options and value judgments on how best to control or reduce flow into the rain affected areas.

Probabilistic logic is required when the demand and/or the availability for water is uncertain or not known in advance, the system must quickly react to changes in demand. The flow rates and canal storage levels must be more precisely controlled to assure an adequate supply to the users and to control the excess to prevent overtopping when the demand suddenly drops. Such a system would require systems modelling techniques to make decisions based on

demand probabilities and validity judgments of the system's chief operating personnel. These judgments are generally affected by the risk proneness or adverseness of the decision maker. Value judgments could be developed to eliminate some of this type of problem.

b. Systems Operation

The Register of Sanctioned and Regulated Flows, Table II-2, is proposed as the system control for operating only the design parameters are used in the operation because the systems are not calibrated. Figure II-2 contains an example of register for one distributary.

The required flow rates in each canal are determined by a water balance equation. The form of the equation depends on the physical layout of each canal and its sub-system. The general format for this is shown in Figure II-2. From Figure II-2, the water balance equation the minor can be written:

$$Q_m = \sum_b^a q_{wc} + q_{lm2} \sum_d^c + q_{wc} + q_{lsm} \sum_f^e + q_{lm1}$$

Where

Q_m = total flow required for minor canal

q_{wc} = total demand (summation) for all the watercourses in a given reach from point a to point b in reach 2

q_{lm2} = seepage loss in reach 2 of minor canal

q_{lsm} = seepage loss in subminor

q_{lm1} = seepage loss in reach 1 of minor canal

The initial demand for each watercourse is obtained from the outlet register. Field calibration of the canal will provide information on the measured flow from each outlet. Similarly, field calibration will determine the seepage loss in each reach. These values are entered into the "Register of Sanctioned and Regulated Flows". The total of the measured outlet requirements plus the seepage losses are the total flow requirement for the reach of canal in question. Extreme care must be taken to equate all outlet requirements to a

single constant flow rate in the canal as calibration will normally be done at several discharges. The seepage losses must be similarly adjusted prior to completion of the Register of Sanctioned and Regulated Flows.

The water balancing process is determined for each distributary canal so that in the end the entire system has been calibrated. The result of this effort should provide the canal officer with the information on exactly where the water is going. The operation of the system can then prorate the water accordingly.

A major problem that may face the canal officer is that the register will definitely indicate that the outlets are not receiving water according to the outlet register nor are the seepage losses uniform from reach to reach. The measured seepage losses will not approximate the standard loss rate assumed in Pakistan of 8 cfs per million square feet of wetted perimeter. The question arises as what to do about the inequity of distribution. There are three general choices:

(1) leave things alone and treat the measured flows as the sanctioned discharge,
(2) reset all the outlets to deliver the sanctioned flow which must include the real seepage loss rate, and
(3) use a combination of (1) and (2).

The action to be taken would depend on several factors including availability of a sufficient water supply to handle the total measured outlet demand plus the real seepage losses, the availability of canal capacity to carry the increased flow, the degree of shortage at the tail cluster, and the sociopolitical situation including law and order.

The authority to accomplish any of the above already rests with the PIDs. Whether or not they will exercise their responsibility or not rests with the Government's policy and ability to carry out the existing laws.

An important part of the calibration and even a shakedown period is to determine and evaluate how the system responds to change. Travel time and flexibility are two aspects of change but there is also the sensitivity of the seepage loss rate (SLR) to changes to system inflows. The assumption of a constant SLR per unit of wetted area requires validation for the range of flow that the canal normally operates in, to determine the rate of change as the flow rate increases or decreases. The same holds true for the outlets. Does a linear approximation of proportionality provide reasonable estimates for flows reaching the tail clusters?

Once the system is calibrated and the S&RF Register is completed, the daily water distribution chart can be prepared. The XEN and SDO's should all have current charts installed at their offices to keep tract of the distribution of water. If a large version was made up with a sheet of clear plastic laid over the chart, a grease pencil could be used to post the daily 0800 hours flow distribution. If communications are available, the chart could be updated several times a day, if the flow situation warranted.

Section 5 : Monitoring

A. General

Monitoring in the constant observation of what is occurring or happening in the system. This is carried out in several ways, daily observations by canal officers and operating personnel, inspections conducted by various levels of command personnel and at various levels of intensity (degree of thoroughness) and by keeping detailed records of discharges, water surface elevations and other facets of operation including inspections.

B. Observations

During the course of their duties, all canal personnel come in contact with one phase or another of operating and/or maintaining the canal system. The staff should be vigilant and observant so that when conditions are observed that are not in accordance with the standard of operation or maintenance or violations of the standing orders of conduct by both staff personnel, farmers or other citizens these deviations are reported. It is the responsibility of

supervisor staff and canal officers to follow up on these reports and initiate corrective action as required.

C. Inspection

The majority of inspections are carried out to monitor the condition of the canal prism and structures. They are conducted to augment and reinforce the maintenance program. The sub-engineers and mates are required to inspect their zones of responsibility at least weekly and would be in a position to observe operating conditions. Also, they are in direct contact with the beldars who are out on the canal banks daily and can receive any information from them and take action as required.

D. Short Term Monitoring Program

In order to monitor, there has to be something to monitor. In irrigation, this starts with the discharges into the various canals. Without establishing a stage-discharge relation, the flow can not be determined. Open flume offtakes to minors can be controlled by needles and a staff gauge, but a record of stage height without a calibration for discharge does not provide significant information and little to monitor. Therefore, the first step or priority of any monitoring program is to define what it is that is to be monitored. The next step is to calibrate the system to be monitored so that it will provide the information required. The third step is to operate the system for a short period in what is called a shakedown period or phase.

The shakedown period is a time during which adjustments, corrections and changes are made to improve the operation of the system. A shakedown period is required following rehabilitation of canal or canal system in order to calibrate the system but also to work out any problems that were corrected during rehabilitation. The major problem following rehabilitation of a canal in Pakistan with respect to operations will lie with the outlets and their non conformance to the outlet register's sanctioned discharge. The problem is minor so long as the correct amount of water reaches all tail clusters in a canal system at the same time. In other words, some distributaries or minors are not by passed in order to get water to other tailend clusters.

During the shakedown period, the canal officers would be required to reset any and all outlets not conforming to standards in such a manner as to have the design flow reach the tail cluster. In this process, which will probably requires calibration of each outlet structure, the seepage loss in each reach of canal will also be determined. The summation of the design or sanctioned outlet discharges plus the actual measured seepage losses will very often exceed the design flow for the canal. Two things can be done; (1) increase the design flow to total required flow to meet both the outlet and seepage requirements and (2) subtract the total seepage loss from the design discharge and prorate the remaining discharge to each outlet in proportion to the original requirements. The individual reduction would be small.

Once the system is operating correctly, in accordance to design and other criteria, the water surface elevations at each outlet are determined and the actual water surface profile can be drawn on the as-built drawings. This profile automatically reflect changes in the systems operation.

To compliment the operating water surface profile, the Table of Register of Sanctioned and Regulated Flows is prepared. This table is similar to the outlet register now in general use but it goes much further because it is to be based on the calibrated flows, losses, and physical details that exist at the completion of the shakedown period. Table II-2 presents the proposed format for the Register of Sanctioned and Regulated Flows. Once prepared, this table is the operating standard. Deviation would not be allowed except for small seasonal changes due to sediment deposition. Since it is proposed that sediment traps be located at those points where the canal system can no longer carry the complete incoming bed load material, the water surface profile should be quite stable.

The proposed Register of Sanctioned and Regulated Flows should be posted where the farmers can observe it. Periodic recalibration of the system including all outlets would be required as a check and monitoring process. Tampered outlets would be reset at the watercourses expense. The posting of the register would help establish accountability in the canal system. Posting

of daily or weekly discharge measurements would show the people that they are receiving their share. Figure II-3 is one way of presenting the data.

E. Long Term Monitoring Program

A long term monitoring program is just what it says it is. It is the collection, processing, compilation and recording of the data required for monitoring the irrigation system. The essential elements are measured, discharges or flows at all water control facilities, water measured and delivered to individual outlets, seepage loss estimates, travel time between control points, water surface elevations at control points, volume of sediment removed from the canal system including when and where and other similar data required by the canal officers.

Both the short term or seasonal records as well as the long term records will allow the canal officers to evaluate the systems performance. The evaluation will allow the canal officers to make adjustment in the system operating strategies as well as to the physical infrastructure to obtain the improvements in operation that will better serve the former and increase his productivity.

The calibration, shakedown and monitoring of an canal system are covered in more detail in Chapter III.

Section 6 : Evaluation

Evaluation is a management process that is periodically used to provide the canal officers with information on how well the system is performing and meeting it stated goals. Evaluation are made with respect to:

* adequacy of operating procedures
* comparisons of various operating criteria/features with predetermined standards
* realization of objectives
* development and updating operation improvement plan
* updating systems goals to meet both the systems and farmers needs.

The purpose of the evaluation is to try to find ways of improving operations so that the farmers have equitable distribution. Other improvement goals would be on the accountability of water through improved water measurement and record keeping, reduction in seepage losses, and efforts to match the available supply to the crop demands.

The monitoring program which develops various records on canal deliveries, water surface elevations, sediment deposition and removal, seepage losses, net irrigated areas, and water deliveries to water courses provides the basic data base for evaluation. Evaluations should be made at two levels; seasonal and long term. Each evaluation provides different information to the canal officers.

Seasonal Evaluation

The seasonal evaluation should be made as soon after 16th October and April as possible. It is a detailed review of what has taken during the preceding six months with the intent of documenting the problems and searching for solutions. The evaluation might include but not be limited to the following:

(1) Review of flow records to each distributary and minor canal to determine how well the scheduled demands were met. Indicate ways to improve equitable distribution between channels.

(2) Review water surface elevation data to ascertain what if any changes have occurred since the beginning of the season. Determine what if and desilting is required. Determine what improvements could be made to the monitoring program to improve the data base. Prepare special instructions, where required, to SDO's, SBE's and beldars to increase vigilence in areas that are approaching the operating and maintenance standards.

(3) Review compliance with operating standards.

(4) Review water use in each watercourse assuming outlets are calibrated to determine reasonable water utilization. Evaluation should include

rainfall, ground water and surface water deliveries on a weekly basis. The evaluation should be made on both a CCA and net irrigated area basis. No attempt needs to be made to evaluate the internal distribution of water received by each watercourse. Reasonable estimates in terms of inches of water delivered, received from rainfall and pumped from the ground. The information should help the canal officers discuss water deliveries with the farmers.

(5) Review operation of all structures. What changes could be make to follow travel times, switch water during heavy rainfall periods, and get water to the tail clusters.

(6) Review need for recalibration of stage-discharge relations and calibrations of outlets.

(7) Prepare recommendations to revise operation plan or water delivery schedules.

(8) Prepare recommendations for annual maintenance plan and improvements for the preventive maintenance plan.

(9) Prioritize system infrastructure improvements.

Annual Long Term Evaluation

The long term evaluation concentrates on an in depth review of the records at the end of the rabi season. The objective is to look at the long term overall performance of the canal system to observe the system's compliance with meeting equitable distribution of water, accountability and sediment control.

The long term evaluation should review the following:

(1) Need for additional water measurements or improvements in the flow monitoring program.

(2) Need for changes in the surface water monitoring program with respect to flow or sediment deposition.

(3) Predict desilting requirements for next years closure period maintenance work plan.

(4) Ways of providing improved distribution of water in order to more closely match the crops' needs.

(5) Improving the conjunctive use of water to more closely optimize the total supply of available water. This would require working with the pump owners/operators.

The results of the evaluation process should be the continual review/revision and updating of the

* water delivery schedules
* operation plans and standards
* irrigation system improvement plan
* preventive maintenance plan
* objective and goals of the system.

The evaluation process provides the canal officer with the technical feed back that signifies how well the canal system is operating. For a well operated system with good accountability, the evaluation process will add the little refinements that are required to make it ever better.

Section 7 : Adjustments

The evaluation of system performance provides the canal officer with the feed back of information that would allow him to make adjustments in system operation. It would also provide information on where improvements could be made in the physical works or even in the organization and staffing. In other words, the evaluation may provide information that will require changes or it may indicate that the canals system is meeting its objectives so that

71

little or no change is necessary. The canal officer should be very wary when two successive evaluations indicate that changes or improvements are not required.

Remember, all irrigation systems can be improved.

The feedback from the post season evaluation should clearly indicate the sediment deposition situation and predict desilting requirements for the next closure period or if a special program may have to be implemented. The evaluation based on the cross-section surveys would provide detailed data on the location and estimated quantities to be removed whereas the water surface level evaluation would indicate when problems are starting to appear and where inspections during the next closure period will have to concentrate.

There are two types of adjustments that would be made; (1) fine tuning the operations and (2) structural or physical changes to the infrastructure. Over a period of time the recommended adjustments would be more detailed in nature and occur less often.

Adjustment in Operations

The primary objective of providing equitable distribution of water to all outlets can be achieved through constant monitoring of the flow records at each headworks and cross regulator along with the water surface elevation records at the control points. These measurements should be supported by periodic recalibration of each outlet to ascertain their compliance with the outlet register. The long range goal would be to establish complete calibration and water measurement at each outlet.

Farmer Participation

The evaluation of the seasonal and long term objectives and goals will provide the canal officer with information that would be useful to him in working with the local farmers and more importantly with water user associations rather than individuals. As indicated in the introduction to this chapter, the farmer is the ultimate user of the water and his needs or requirements must

be kept in mind; not so much on an individual basis but as groups related to the watercourse and eventually at the distributary level.

By being able to provide accountability of the water and its distribution to individual watercourses may reduce the people related problems that the officer must deal with. It may provide an incentive for farmers to organize into water user associations, WUAs, who would better be able to police and maintain their individual watercourses. It may also provide the incentive for WUAs located along a distributary to form an organization composed of all the WUAs that would represent the WUA's interest in dealing with the canal officers but also could be responsible for policing the distribution of water and even assisting in making improvements to the distributary. This is not at all impossible in Pakistan because it has happened, regrettably not very often, but then when has the canal officer really tried to work for or with the farmers.

Section 8 : Accountability

Responsibility is the obligation of a person or organization to preform the tasks or functions that have been assigned in a satisfactory manner. One of the functions of the PID is to provide for the equitable distribution of water to all watercourses in a timely manner and in the quantity to be provided. The outlet register and associated allotments being the basic legal allocation.

Accountability is the public reporting to the farmers or public in general on how well the PID has met this responsibility. There many ways to provide the water users with information indicating how well the system is preforming. A basic method would be to show what the sanctioned flow requirements are and then indicate on a day by day or week by week basis the exact amount of water delivered. Farmers can learn to read staff gauges in order to distinguish whether water is flowing as required. Another way to gain respectability is to keep the water users informed in what is going on, and in the case of shortages why the supply has been reduced.

With adequate training, high standards of performance and accountability for its actions, a responsible canal officer can gain considerable confidence from the water users. With a high level of confidence, a good manager should be able to get the cooperation of the water users through formal organizations or even informally to help police the equitable distribution of water.

By providing accountability, the canal officer may be able to gain local community support to help with the discipline problems.

No canal system can operate effectively if there is no discipline among the staff as well as the water users. Policing and rapid enforcement of all rules violations equitably is what discipline is all about. As soon as discipline breaks down, for whatever reason; and one water user is allowed special consideration (extra water as an example) everyone else will know and enforcement will become difficult if not impossible.

The Register of Sanctioned and Regulated Flows is one record that could be used by the canal officer to provide the water users with information on accountability and if the calibration is checked annually to maintain compliance it should help assure the people they are getting their fair share. By posting the daily flow record, Figure II-3, at the SDOs office or at the regulators, farmers would be able to check on conditions.

As indicated herein, there are many ways the canal officer can build up the confidence of the water users in his job performance and exercising his responsibilities that should decrease the conflicts between the PID staff and the farmers. The people want and expect a fair share.

Section 9 : Operation of Water Control Structures

A. Introduction

The Executive Engineer has the responsibility for the operation of the control structure and head regulator gates. He exercises this responsibility by instructing the gage reader/operator as to the amount of water to be released into each canal under the control of each given structure.

B. Operator Attendance

Full time attendance is required at regulation control points where two or more distributaries offtake. The regulation staff, with a gauge reader and two beldars, are responsible for the operation of the gates or whatever controls are available to control flows into the offtaking canals. There must be someone in attendance at the structure at all times; day or night. If there is a signalling station located at the regulator, the singaler is on duty during the day because this is when most communications occur. The telegraph is the only communication line; the signaler is the only person trained for its use and other staff personnel can not use it. This can be a major constraint if the signaler is not quartered nearby.

Those control points that operate only to maintain a controlled water surface for one or two offtakes do not have a regulation staff. The gauge reader only makes adjustments during the day as required. The offtaking canal operates more or less in proportion to the changes in the water surface elevation. Communication with the gauge reader at a ungated cross regulator would be by messenger.

C. Communications

Communication between the various control points is important because operating staff must be able to inform the downstream control points on the changes that are occurring in the system. The continuous flow mode of operation requires only a minimum of communication between the command levels and the control points except for emergencies. With the long travel distances hence the lengthy travel times, operation at the control points requires the periodic adjustment of headworks and cross regulators to meet or allocate the incoming flow as scheduled. In most instances the allocation is simply made by prorating proportionally to each headworks based on percentage of the design discharge, Q_d.

The original design that limited the number of control points also simplifies the communication requirements. Figure II-3 which represents a system that has a CCA of about 94,000 acres has only 10 control points of which only

three would be considered major in that they control flows to two or more distributaries.

It is important that the staff at the head regulator to continue to inform the downstream regulator control points with regard to changes in discharge. The regulation control points must relay information on downstream concerning what to expect.

D. Operating Log

The gauge reader must maintain the operating log that is kept at each regulation control structure. The operating log is used record all changes made in the operation of the gates at each control point. All instructions sent by the SDO are logged in on this form. Written orders received are attached. It is important that the time received is noted in the log. All official persons inspecting the canal and the control structure should sign in on the log including date, time etc.

All flow measurements made at the regulation control point should be entered on the log sheet as well as on the respective measurement records. Problems with the gate hoist or other equipment are noted.

The operating log will be forwarded to the SDO's office after the first of the month. A new log will be started on the first day of the month. Exhibit II-6 is the recommended format.

E. Operating Standards

1. Performance Standards

Performance standards are established to provide the field staff with the standards to which a canal must be operated. The performance standard for operation of rehabilitated canals is shown in Table II-3. The standards relate to allocation of water to watercourses, equitable delivery, maximum and minimum allowable flows and other operating functions.

16

2. Consequence of Inattention to Details

The consequence of not paying attention to details and poor communication will be overtopping and breaching of the canal. The lack of freeboard and wasteways leaves little room for misoperation of the control structures. The few escapes in the canal system are intended to handle water only during emergencies such as breaches or during sudden period of heavy areal rainfall. They are not available as safeguards to poor operating procedure or inattention. Failure to operate gates correctly so that water backs up in the canal causing a breach is just one example of poor judgement.

3. Flow Limits

There are three operating limits that must be observed at all times. First, the maximum inflow should not exceed 1.2 times the design discharge. Second, discharges greater than the design flow can not be run for more than two weeks and must be followed by a period of two weeks at normal flow. Third, under no circumstances will be design freeboard be encroached on more than 50% of its depth. Therefore, except for the tail reaches the maximum rise in the water level will be 9 inches. Canals where the depth of flow is less than 2.5 ft are limited to only 6 inches.

Operating under surcharge condition when flows are greater than design flows requires that the beldars be alerted. During surcharge operating conditions the beldars should intensify their patrolling to ensure that the freeboard is not encroached on more than the allowed 6 or 9 inches specified above.

4. Canal Filling and Drawdown (dewatering)

Except in emergency situations, the discharge in a canal should never be changed rapidly. A rapid rise or fall in the water level of a canal is a major cause of bank caving. A general rule is that a canal should not be raised or lowered more than one foot in a 24-hour period.

The major reason for a large change in canal discharge would be when the system must change the mode of operation from continuous flow to rotation flow. This means one canal must be increased to design discharge and the other decreased to near zero. An increase in flow from about 55 to 60% of

design to 100% in a distributary will cause a rise in water level of about 1-foot. The decrease in other canal will be on the order to two feet. The rapid drawdown condition is more serious than rapid filling. Drawdown would start with the first foot or so of the canal bank already unsaturated. Flows should be adjusted every six-hours with the change limited to 20% of the total change in flow to be made. This will allow the complete change to be made at the head regulator in 24 hours. The alternative is to change at a rate of 10% of the total increased discharge every three hours. A second alternative exists wherein the change would be based on the percentage of depth that must be covered in a 24-hour period. This alternative would require a different change in discharge each time the change in gate opening is made. This method is better suited to large canals than small.

F. Operation of Gates

At the design discharge the gates in the cross regulator or canal headworks must be operated to maintain a constant water level upstream if watercourse outlets are located in the backwater curve in order to maintain the sanctioned flow into the watercourse. Under these conditions where multiple gates are located, all gates controlling flow into each canal should be opened the same distance in order to have the stilling basin area operate as efficiently as possible. It also means that the discharge measurements would tend to be more accurate.

When the incoming water supply is greater than the design capacity, the mode o. operation of the gates may change. If the XEN indicates that all of the excess is to be passed on downstream in either the main channel or offtaking canals, the gate openings are increased and the water level upstream and the flows into these were not to be increased.

Where the XEN orders the flows to either canals or outlet works be increased then the gate operator must allow the upstream water level to rise to the level that will enable those headworks without gate control to receive their required inflow. Where all headworks are gate controlled, it is appropriate to increase gate openings and hold the upstream water level as low as possible

in order to minimize seepage losses and prevent infringement on the freeboard.

The operation of gates when the incoming water supply is less than the design flows requires a much greater degree of control. The position of the upstream water level is critical, particularly where uncontrolled headworks or outlets are located. Water levels have to be reduced to the level that will provide these structures their proportional share or that which is ordered by the XEN. Upstream water levels maintained above the level that controls the outflow will result in the tailenders being shorted.

The gate openings of controlled headworks are easily adjusted to the desired discharge by adjusting the gate opening.

Care must be observed in that no canal receive less than 50 percent of the design capacity as excessive siltation could occur in the canals.

Where there are multiple gates in the control structure it is recommended that no all of them be operated with small openings due to possibility of excessive wear. It is better to operate with one gate when the opening is less than 6 inches rather than two though there will be unbalanced flow and more eddy action (turbulence) in the stilling area. Where there is an odd number of gates, it becomes practical to operate the center gates and leave the outside gates closed as this will maintain a more uniform inflow pattern. Also, it is somewhat easier to get an accurate flow measurement and control with a gate that is not throttled down to close to the sill level.

Generalized operating instructions are given in Table II-4 and II-5. These will cover most situations. In some cases, older equipment may have different characteristics that acquire the SDO or XEN to modify the instructions for a given site. Similarly, no instructions have been prepared for the use of curries and needles because their use is site specific to rise a water level to a specific height to achieve a given discharge to a distributary or minor canal.

Where the offtaking canal is aligned at an angle of diversion less than 90° the procedure for opening gates may be modified slightly. Where more than one gate is available, the upstream gate should be opened more than the downstream gate. This should be considered where a sand bar forms downstream in the diversion channel. Opening the upstream gate more will cause more turbulence along the adjacent area in the diversion channel and thus reduce the potential for the bar but also it may reduce the amount of incoming sediment slightly. The downstream gates will tend to draw more sediment, because there is more time for the slower moving water at the canal bed to enter the diversion canal.

G. Operation of Control Structure Using Stoplogs

Stoplogs are used on many canal systems to control the water surface elevation in the canal at cross regulators. In most of these installations, the headworks to distributary or minor canals are free offtakes. Free offtakes have no gates and the discharge is controlled by the upstream sill-reference head on the structure. Two types of stoplogs are used in Pakistan; curries and needles.

(1) Curries - are horizontal wooden planks that are inserted into slots located in the headwall of a structure and piers where the control width is too wide for a single curry. Curries are limited to about 10 ft in length.

(2) Needles - are vertical wooden planks set side-by-side across the width of the control structure. The crest of the control structure is raised so that the end of the needle has place to be rested against so that the force of the water holds them in place.

The function of a cross regulator is to control the water surface elevation upstream of the structure. The controlled water surface allows the associated headworks to control the discharge and issue the required amount. The water surface elevation is particularly critical when free offtakes are used. In Pakistan, several offtakes are usually controlled by one cross regulator. The practice was based on reducing the cost of canal structures even through it

80

might increase the length of the canals. Reducing the number of structures also reduced the number of gate tenders and simplified communications by reducing the points to be connected.

One disadvantage of control structures using curries could be upstream sedimentation caused by lowering the velocity. Sluice gates cause less of a problem in this respect because bottom currents will develop that will carry the bed load material on through the structure. The offtaking canals may or may not carry a proportional amount of sediment depending on their angle of incidence with the canal and elevation of the outlet sill above the canal bed level.

Stoplogs are used to control the upstream water level in a cross regulator. A staff gauge is located on the upstream headwall to indicate the water surface elevation. Where a arbitrary level has been referenced to the sill a conversion table must be prepared to indicate the true elevation of the water surface. On large structures a stilling well would provide a better reading of the water surface level.

Curries are usually set with the same number of curries in each bay of a larger structure. When small change in the upstream water level are required a curry in the center bay should be pulled. This allows the higher velocity to remain in the center of the canal so that the eddy currents formed in the tailwater pool are kept away from the bank as much as possible. Similarly, if the surface must be raised a little the curries would be placed in the abutment bays. Flow condition should be kept as uniform across the structure as possible. Most cross regulators are operated with modular flow conditions.

Curries are difficult to move where the over flow depth becomes large. This is particularly true if a cross walk has not been provided for access to each bay. A piece of reinforcing rod with a sharpened hook on one end and a handle formed on the other can be used to lift the curries up out if the slots by working each end up a little at a time.

Needles are used in combination with bridges and falls. The bridge deck provides an easy work surface to work from. Needles are seldom placed close enough together to prevent flow from occurring between them. This tends to allow sediment movement. Needles should be placed in the canal starting at both banks and working towards the center. This keeps the flow pattern more uniform in the tailwater area. This should not be overdone as the concentrated flow in the center may cause velocities too high to be able to place additional needles in the canal. Some judgement is required.

A problem associated with needles is that they collect floating trash in the bays. This will have to be cleaned out daily. Figure V-1, Volume 3 presents a cleaning fork that could be used. In some canals, the open bay has been left next to one abutment so that trash might flow through. A floating trash boom facilitates the surface velocities to move the trash towards the opening. Unless the downstream embankments are well protected, the high velocity in the tailwater will be a greater embankment scour (erosion) problem than the center discharge condition.

The use of stoplogs, either curries or needles, provides a relatively easy method of controlling water surface elevations. Construction costs are low and as long as gate tender must be present the operation costs are the same. Calibration of these structures to provide a stage-discharge relation is another thing. Flow conditions over the curries are similar to an overflow weir. The crest shape is not considered to be sharp. Leakage between curries depends on their true shape and ability to be nestled together with a minimum of open space between them.

TABLE II-1

ALMANI BRANCH CANAL IRRIGATION DEMANDS

W/C		AREAS					AUTHORISED DISCHARGES					
Nr	RD	CCA	Dry Crop	Ave Areas Crop	Inty	Gdn	Dry Crop	Gdn	Total	Accum	Loss	Accum +loss
SOOMERKI DISTY												
13L	50.6	720	720	128	18		1.33		1.33	1.33		1.33
12L	50.6	798	798	205	26	2.0	2.14	0.02	2.16	3.49		3.49
11R	50.0	680	680	178	26		1.85		1.85	5.35	0.02	5.37
11L	49.3	420	420	76	18	2.0	0.79	0.02	0.81	6.16	0.03	6.22
10L	47.5	726	726	135	19		1.41		1.41	7.56	0.10	7.72
10R	45.3	745	745	221	30		2.30		2.30	9.87	0.13	10.15
9L	40.1	979	979	241	25		2.51		2.51	12.38	0.35	13.02
9R	39.8	850	850	112	13		1.17		1.17	13.55	0.02	14.21
8L	38.9	726	716	144	20		1.50		1.50	15.05	0.07	15.78
7L	35.6	779	779	161	21		1.68		1.68	16.72	0.28	17.46
6L	33.4	803	803	298	37		3.11		3.11	19.83	0.20	20.76
8R	32.4	657	657	215	33		2.24		2.24	22.07	0.10	23.10
5AL	31.7	440	440	161	37		1.68		1.68	23.75	0.07	24.85
7R	26.8	678	678	153	23		1.59		1.59	25.34	0.52	26.96
PKRA	25.7								8.34	33.68	0.12	35.43
6R	25.5	707	707	194	27	1.0	2.02	0.01	2.03	35.71	0.03	37.48
5L	25.4	1163	1163	357	31		3.72		3.72	39.43	0.01	41.22
5AR	24.1	1317	1317	515	39		5.37		5.37	44.80	0.18	46.76
5R	22.5	641	641	280	44		2.92		2.92	47.72	0.23	49.91
4AR	21.5	794	794	264	33		2.75		2.75	50.47	0.15	52.81
4R	20.2	457	457	292	64		3.04		3.04	53.51	0.20	56.06
3R	19.3	647	647	188	29	6.0	1.96	0.06	2.02	55.53	0.14	58.22
2AR	18.0	822	822	280	34		2.92		2.92	58.45	0.21	61.35
4L	16.9	429	429	319	74		3.32		3.32	61.77	0.18	64.86
4AL	16.4	136	136	39	29	35.0	0.41	0.36	0.77	62.54	0.09	65.72
2R	14.9	420	420	341	81		3.55		3.55	66.10	0.26	69.53
3AL	14.8	387	387	221	57		2.30		2.30	68.40	0.02	71.85
3L	13.5	564	564	274	49		2.86		2.86	71.26	0.24	74.94
3BL	12.2	490	490	329	67		3.43		3.43	74.68	0.24	78.61
2BR	11.7	367	367	170	46		1.77		1.77	76.46	0.09	80.48
2L	9.2	743	743	458	63		4.88		4.88	81.33	0.48	85.83
1R	9.0	1010	1010	532	53		5.54		5.54	86.88	0.04	91.41
1CR	5.5	514	514	225	44		2.34		2.34	89.22	0.71	94.47
1L	3.5	547	547	332	61		3.46		3.46	92.68	0.42	98.35
1BR	0.3	266	266	176	66		1.83		1.83	94.51	0.68	100.86
1AR	0.1	728	728	333	46		3.47		3.47	97.98	0.04	104.37
											0.02	104.40

TABLE II-2

REGISTER OF SANCTIONED AND REGULATED FLOWS

Water Course			Design Discharge			Calibrated Discharge			Type of Outlet	Sill elev.	F.S.L. W.S. Elev.	Dimensions of Elevations		
NR	RD	CCA	Sanc. Flow	Loss	Accum. +loss	Measured Flow	Loss	Accum. +loss				Width	Dist. to Crest	TBM Elev.

TABLE II-2

EXAMPLE REGISTER OF SANCTIONED & REGULATED FLOWS

(Transfer of Outlet Register)

Water Course			Design Discharge			Calibrated Discharge			Type of Outlet	Sill elev.	F.S.L. W.S. Elev.	Dimensions of Elevations		
NR	RD	CCA	Sanc. Flow	Loss	Accum. +loss	Measured Flow	Loss	Accum. +loss				Width	Dist. to Crest	TBM Elev.
SOOMERKI DISTY														
Head Work	0.0			0.02	104.35									
1AR	0.1	728	2.68	0.04	104.33									
1BR	0.3	266	0.98	0.68	101.61									
1L	3.5	547	2.02	0.42	99.94									
1CR	5.5	514	1.89	0.73	97.51									
1R	9.0	1010	3.72	0.04	94.88									
2L	9.2	743	2.74	0.50	91.12									
2BR	11.7	367	1.35	0.10	87.89									
3BL	12.2	490	1.81	0.26	86.43									
3L	13.5	564	2.08	0.25	84.37									
3AL	14.8	387	1.43	0.02	82.05									
2R	14.9	420	1.55	0.28	80.60									
4AL	16.4	136	0.93	0.09	78.77									
4L	16.9	429	1.58	0.20	77.74									
2AR	18.0	822	3.03	0.24	75.96									
3R	19.3	647	2.46	0.16	72.69									
4R	20.2	457	1.68	0.23	70.08									
4AR	21.5	794	2.92	0.17	68.16									
5R	22.5	641	2.36		65.07									
5AR	22.5	1317	4.85	0.47	62.71									
5L	25.4	1163	4.28	0.02	57.39									
6R	25.5	707	2.62	0.03	53.09									
PKRA	25.7		11.04	0.15	50.44									
7R	26.8	678	2.50	0.63	39.25									
5AL	31.7	440	1.62	0.09	36.12									
8R	32.4	657	2.42	0.12	34.42									
6L	33.4	803	2.96	0.25	31.88									
7L	35.6	779	2.87	0.36	28.67									
8L	38.9	726	2.67	0.09	25.44									
9R	39.8	850	3.13	0.03	22.67									

TABLE II-3

PERFORMANCE STANDARDS FOR CANAL OPERATION

1. Allocation of Water

The latest Outlet Register used for rehabilitation provides the sanctioned allocation of water to each watercourse. This defines equity.

2. Equitable Distribution of Water

The full supply level, FSL, defines the condition for which the equitable distribution of water was designed to be made to each watercourse. Therefore, at the design discharge the water level in the canal must reflect the FSL at all times; i.e., a deviation indicates a non-equitable condition.

3. Equitable Distribution of Sediment

The design of the turnout includes the consideration of sediment draw. The design of a rehabilitated canal assume the equitable withdrawal of sediment by each watercourse turnout. Therefore, the sill level of an outlet cannot be raised.

4. Uninterrupted Delivery

The uninterrupted delivery provides equitable distribution of water in a continuous flow system. Rotation of flows between canals is required when canal flows are reduced to 55% of the design discharge. Flows can be reduced to watercourse(s) serving an area due to occurrence of heavy rainfall or a low crop water demand. All changes in distribution must be recorded on operations log.

5. Maximum-Minimum Flows

The maximum allowable flow in a canal under certain conditions is limited to 1.2 times the design flow (1.2 Qd). The duration of a discharge greater than the design discharge cannot exceed two weeks under any circumstances. The canals should not be operated at flows less than 55% of design.

TABLE II-3

PERFORMANCE STANDARDS FOR CANAL OPERATION
(Continued)

6. **Maximum Water Level**

The maximum water level can never be allowed to exceed one half of the design freeboard (1/2 fb) under any circumstances.

7. **Inspections and Reports**

Inspections and accompanying reports must meet the following minimum:

(1) Sub-engineer must make a weekly inspection and report.

(2) Sub-division Officer is required to make a fortnightly inspection and report.

TABLE II-4

GENERAL GUIDELINES FOR THE OPERATION OF CROSS REGULATORS

The control and delivery of irrigation water arriving at the cross regulators is the responsibility of the Executive Engineer. He is authorized to make all necessary adjustments to the flow to provide equal distribution of water to all distributaries and minor canals. Additional guidelines are as follows:

1. Every regulator gate should be provided with a locking device.

2. At the start of irrigation season, release only a small regulated flow, upto 20% of full capacity from the regulator(s) for canal priming purposes. This should be done a day or two immediately before the start of regular water deliveries. The flow can be gradually increased as the water wets the system. Be sure the flow can be passed through the system. The distributary headworks should all have the gates fully open to allow flow to pass through without raising water surface.

3. As soon as the priming water has reached the end of the main conveyance canal the check (cross) regulators should be partially closed to allow the water surface to slowly rise.

4. Release of water should be done slowly until the water level reaches the controlled water level at all the downstream regulators.

5. Water should be released into the branch and distributary canals as soon as the water level in the main canal will allow it.

6. Constant observation is necessary to be sure the water level does not rise too fast and the gates control the flow.

TABLE II-4

GENERAL GUIDELINES FOR THE OPERATION OF CROSS REGULATORS
(Continued)

7. When the conveyance system becomes fully primed the release (diversion) into the main canal should be increased to the required issue.

8. When the full release arrives at the regulators, the gates will be re-regulated and the appropriate discharges will be set for each distributary and water measurements made.

9. During low flow periods the Executive Engineer will check the available flows to determine when rotation irrigation should be initiated. Normally sufficient notification will be received so that he can notify the SDOs and some form of warning can be given to the farmers. The SDO has the same responsibility to check on when rotation should be started. The XEN should then inspect the system to be sure that the necessary adjustments have been made. He will also make sure that the standard operating procedures for rotation irrigation or other low flow scheduling strategies are understood and accordingly being carried out.

10. Except in an emergency, closing of the regulator should be regulated such that the water level in the canal does not change abruptly nor decrease more than one foot per day, thus minimizing slumping of the inside canal berms. The gate sill must be kept clean to avoid leakages when the gate is finally closed.

11. In closing a regulator or headworks gate, care should be exercised not to over manipulate the wheel in order to avoid bending the gate stem. Once the locking device is about 1/2-inch away from the horizontal braces of the gate, the wheel or crank should be turned very slowly until the gate rests on the sill. Stop turning the wheel at this point. Bending of the stem usually occurs when the gate keeper continues to on turn the closing mechanism not knowing the gate has already reached the gate sill. The gate is then locked.

TABLE II-4

GENERAL GUIDELINES FOR THE OPERATION OF CROSS REGULATORS
(Continued)

12. The travel time of flow to each regulator or between regulators varies and must be established if not known.

13. The losses in each canal reach should be estimated from preforming simple water balance studies at various discharges.

14. Under no circumstances should water be allowed to spill or flow over the top of gates.

15. Optimum stilling of water downstream of regulators and gated structures is produced when waterflow is distributed uniformly across the basin as it enters. A hydraulic control structure having more than one control gate produces flow distributed uniformly into the stilling basin when all gates are opened equally. Where all gates cannot be opened equally, the most desirable flow patterns usually are produced by equally opening gates symmetrically about the structure centerline. Gates must be operated in the above fashion at all times.

TABLE II-5

EXERCISING AND TESTING GATES

1. Safety of the structure, the canal system and good operation and maintenance practices require that each gate be tested to confirm that it will operate as designed.

2. All gates not subject to normal operations (periodic raising and lowering) must be tested once a year. This applies primarily to escapes.

3. Exercising and testing should be done by using normal power sources (nominally by assignment operator) to ensure the operation of each.

4. All exercising and testing results should be recorded and dated in the "operating log" or with the Sub-engineer. Copies should be forwarded to SDO.

5. A differential head test should be performed while subjected to the maximum normal head expected for the reason. Testing confirms the gates will open and close satisfactory. Testing should be conducted in the following sequence:

   (a) Barely open (crack) the gate so that it will produce additional leakage; then close.

   (b) Open the gate 1 inch; then close.

   (c) Open the gate 3 inch; then close.

   (d) Open gate 10 percent; then close.

Note: Percentage of gate open refers to percentage of normal full range of height gate would be operated in.

TABLE II-5

EXERCISING AND TESTING GATES
(Continued)

6. Caution: If, during any test, the gate will not close from any position or otherwise malfunctions, stop the test and determine the cause of the malfunction and correct it. If malfunction cannot be immediately corrected, contact SDO for assistance. Testing will not be resumed until malfunction is corrected.

7. An operational test shall be performed on emergency gates (escapes) once every six years. The gate(s) should be raised to the fully open position and closed. Gates can be opened sequentially unless known problem would occur. Operation of emergency facilities during the 6 year period may be substituted for this requirement.

8. All required lubrication and maintenance to the hoist equipment should be done prior to operational testing and exercising.

9. For safety reasons, two persons must be in attendance when exercising and testing of gates is performed.

VARIABLE AREA SYSTEM OF ROTATION

I. Difinition of Method of Irrigation

Name	Limits of Operation
Continuous Irrigation	Qa > 75% Qdz.
Type I Rotation	Qa > 50% and < 75% Qdz.
Type II Rotation	Qa > 25% and < 50% Qdz.
Type III Rotation	Qa > 25% Qdz.

Where:

Qa = available flow in canal
Qdz = design capacity of canal

II. Type I Rotation

Type I rotation is initiated when Qa < 0.75 Qdz. Each 14 day (336 hour) period should be divided into 4 periods based on the areas of the distributaries as follows:

$$\text{Duration } D = \frac{a+b+c}{a+b+c+d} \times \frac{t}{n} \text{ hours}$$

Period 1 : Areas a, b, and c are irrigated but d is not;

$$\text{Duration, } D_1 = \frac{a+b+c}{a+b+c+d} \times \frac{336}{3} \text{ hours}$$

Period 2 : Areas b, c, and d are irrigated but a is not;

$$\text{Duration, } D_2 = \frac{b+c+d}{a+b+c+d} \times \frac{336}{3} \text{ hours}$$

Period 3 : Areas A, c, and d are irrigated but b is not;

$$\text{Duration, } D_3 = \frac{a+c+d}{a+b+c+d} \times \frac{336}{3} \text{ hours}$$

Period 4 : Areas a, b, and d are irrigated but c is not:

$$\text{Duration, } D_4 = \frac{a+b+d}{a+b+c+d} \times \frac{336}{3} \text{ hours}$$

III. Type II Rotation

Type II rotation is initiated when Qa < 0.5 Qdz. Each 7-day (168 hours) period should be divided into 2 periods based on the areas of each distributary as follow:

Period 1 : Areas a and c are irrigated but b and d are not:

$$\text{Duration, } D_1 = \frac{a+c}{a+b+c+d} \times 168 \text{ hours}$$

Period 2 : Areas b and d are irrigated but a and c are not:

$$\text{Duration, } D_2 = \frac{b+d}{a+b+c+d} \times 168 \text{ hours}$$

IV. Type III Rotation

Type III rotation is initiated when Qa < 0.25 Qdz. Each 7-day (168 hour) period should be divided into 4 periods based on the areas of each distributary as follows:

Period 1 : Area a is irrigated but d, c, and d are not;

$$\text{Duration, } D_1 = \frac{a}{a+b+c+d} \times 168 \text{ hours}$$

Period 2 : Area b is irrigated but a, c, and d are not;

$$\text{Duration, } D_2 = \frac{b}{a+b+c+d} \times 168 \text{ hours}$$

Period 3 : Area c is irrigated but a, b, and d are not;

$$\text{Duration, } D_3 = \frac{c}{a+b+c+d} \times 168 \text{ hours}$$

Period 4 : Area d is irrigated but a, b, and c are not;

$$\text{Duration, } D_4 = \frac{d}{a+b+c+d} \times 168 \text{ hours}$$

EXAMPLE OF ROTATION IRRIGATION SCHEDULING

Purpose: Prepare rotation irrigation schedule(s) for Kharif Irrigation System.

Given: Kharif Irrigation System schematic diagram with appropriate data: sanctioned discharges, length of individual reaches. The given discharges at the headworks for various distributaries includes all internal distributary losses. The design discharge was 2283 cfs.

Assumptions:

1. Rotation irrigation will be initiated when inflow discharge (Q_i) drops to 60% of design discharge.
2. Canal losses (Q_l) are in accordance with the equation:

$$Q_l = 2.75\sqrt{Q_i}\ (8\times10^{-6}\ \text{cfs/ft}^2)\ L$$

   Where L = length of reach (ft) with Q_i.
3. Equitable distribution to all distributaries.

Step 1: Determine Rotation Units:

Total sanctioned discharges = 2113 cfs.
Assume three Rotation Units
Average area per unit 2113/3 = 704 cfs.

Based on location of water control structures
Rotation Unit C would be at end of reach L5
RUC = 165 + 146 + 21 + 232 + 129 + 25 = 718 cfs.

Rabi Branch Canal serves too large an area to be operated as a single unit with three rotation units. Therefore, it will be divided into two units.

The two distributaries with 434 and 183 cfs. should be added to the two distributaries on the main canal with 43 and 82 cfs. respectively.
RUB = 434 + 183 + 82 + 43 = 742 cfs.
These areas are reasonably contiguous in terms of operation.
Therefore,
RUA = 324 + 179 + 34 + 6 + 12 + 15 + 69 + 14 = 653 cfs.
These units are also reasonably contiguous.

Note that there are 6 direct outlets on the Rabi Branch Canal which will operate if there is water in the canal. The control structure for the two small distributaries with 12 and 15 cfs. respectively are controlled with needle type flash boards.

Sketch 1.
Design Discharges

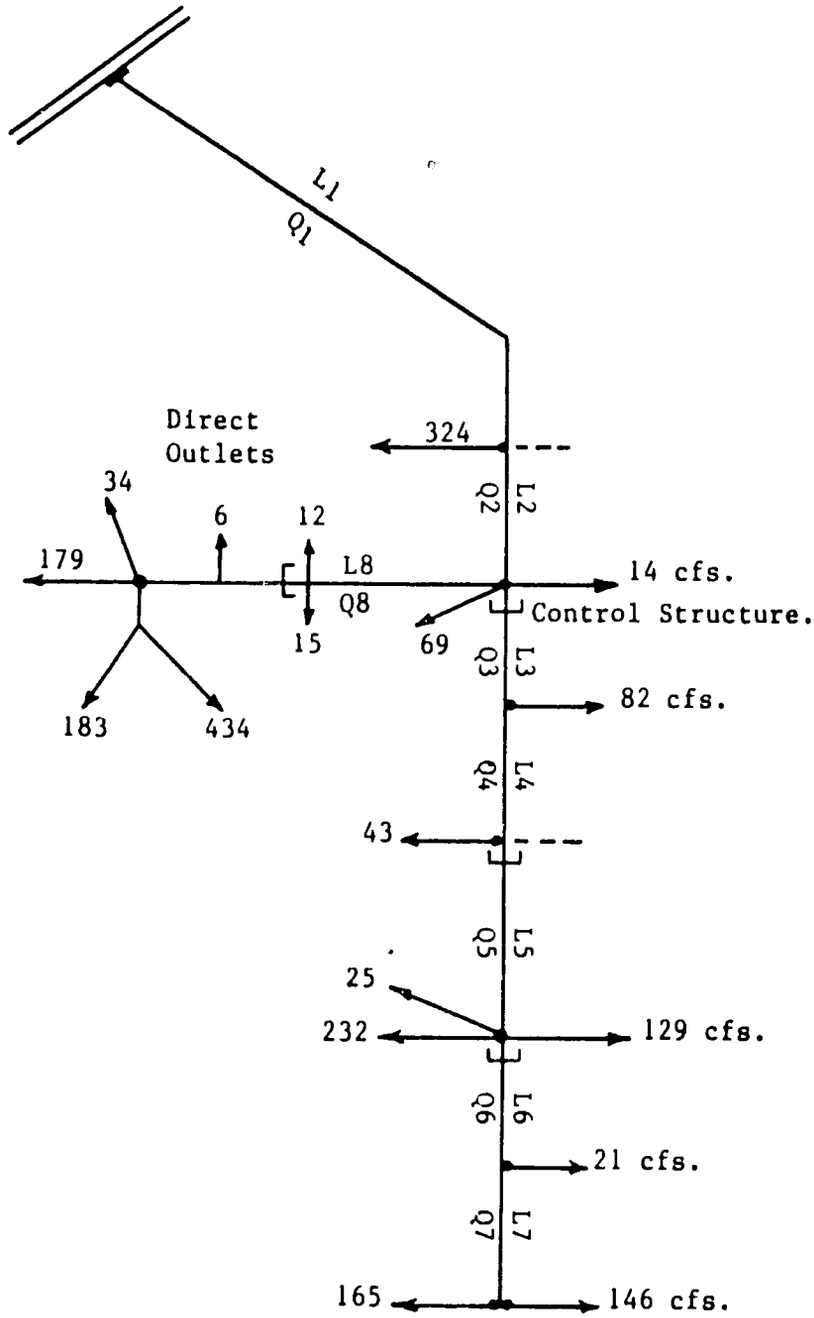

Reach	Qe (cfs)	L- (ft)	Q1 (cfs)	Qi (cfs)
L7	311	34513	14	325
L6	346	16464	7	353
L5	739	65890	40	779
L4	822	5000	3	825
L3	907	29900	20	927
L8	863	42900	28	891
L2	1901	11000	11	1902
L1	2236	45600	47	2283
			170	

Check Operations:

System has been operating at 0.615 Q or 1400 cfs. as shown on sketch 2.
The inflow has been further decreased to 1350 cfs. which is less than 0.60 Q or 1370 cfs. which require rotation irrigation. Assume RUB and RUC are the two units whose turn is next.

The tail end requires a flow of 927 cfs. (843 + 84) (sketch 1).
Flow into Rabi Branch would require

$Q = 434 + 183 + 6 = 623$ cfs.

$Q_1 = 2.75\sqrt{623}\,(8\times10^{-6})\,(42900) = 23.6$ cfs.

$Q + Q_1 = 646.6$

Total Demand = 927 + 646.6 = 1573.6 cfs.

Loss from headworks to division point

$Q_1 = 2.75\sqrt{1350}\,(8\times10^{-6})\,(56{,}600) = 45.7$ cfs.

and 1350 - 45.7 = 1304.3 cfs.

Prorated at 1304.3/1573.6 = 0.82886

and RUB = 646.6 (0.8289) = 535.9 cfs

RUC = 927.0 (0.8289) = 768.4 cfs

RUB Q_1 = 21.8 cfs.

and Q_e = 535.9 - 21.8 = 514.1 cfs < 0.8289 (623) ∴ short

RUC	Q_i	-	Q_e	-	Q_o		
	768.4		18.2		0.83(82)	=	682.2
	682.2		2.9		0.83(43)	=	643.7
	643.7		36.8		0.83(386)	=	287.0
	287.0		6.1		0.83(21)	=	263.5
	263.5		12.3			=	251.2
			76.3				<0.83(311)
							=257.8

Total loss = 76.3 + 21.8 = 98.1 cfs.

and 1304.3 - 98.1 = 1206.2 cfs.

Note that (623+843)0.83 = 1215.1 cfs. > 1206.2 cfs.
Therefore, must reduce flows diverted into distributaries

ratio = $\frac{1206.2}{1215.1}$ = 0.99268

Sketch 2.
Continuous Operating Mode, Q = 1400 cfs.

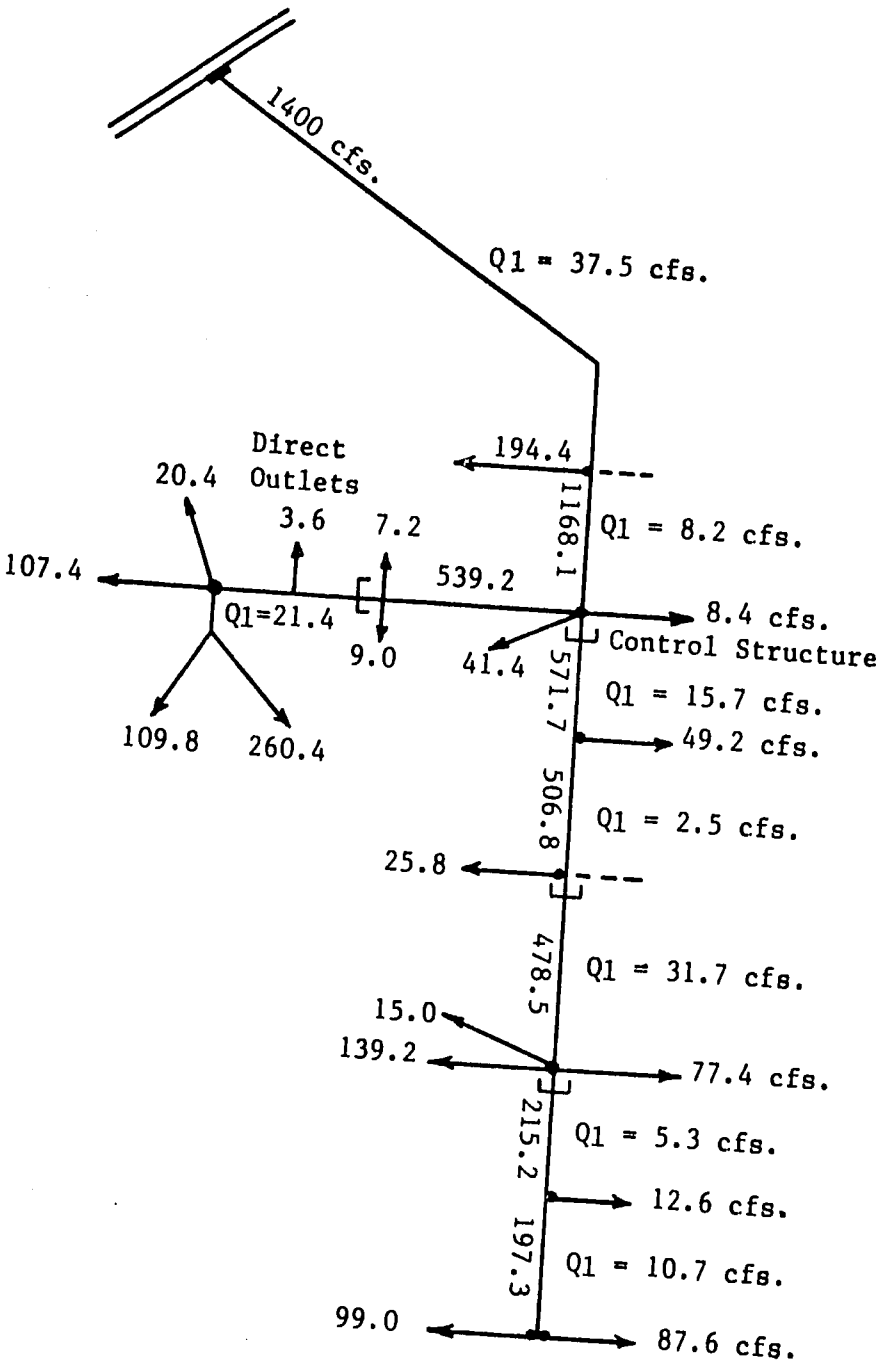

RUB	= 623 (0.8289) (0.99268)	= 512.6 + 21.8	= 534.4 cfs.	
RUC	= 843 (0.8289) (0.99268)	= 693.6 + 76.3	= 769.9 cfs.	
	Sub Total	1206.2	1304.3	
Incoming losses			= 45.7	
Total inflow to kharif system:			1350.0	

Sketch No.3 presents the final distribution for RUB and RUC with a Q_i = 1350 cfs.

The problem would be slightly more complicated in a real field situation because the canal losses would be at different rates in each reach and could change by season also.

Alternative Operation (non-equitable):

The alternative mode of operation would be to deliver the full 646.6 cfs. to RUB and the remaining 657.7 cfs. into RUC. There are three alternatives available on how to proportion the 657.7 cfs. to RUC:

1. Issue full supply to each distributary starting at head and until it runs out. The result would be the last two distributaries would get little or no flow.

2. The same as alternative (1) except start at tail and so that upper distributaries would be without water.

3. Equitable distribution as shown above.

Sketch No. 3.

Rotation Irrigation, Equitable Distribution.

Exhibit-II-2

Sheet 6 of 6

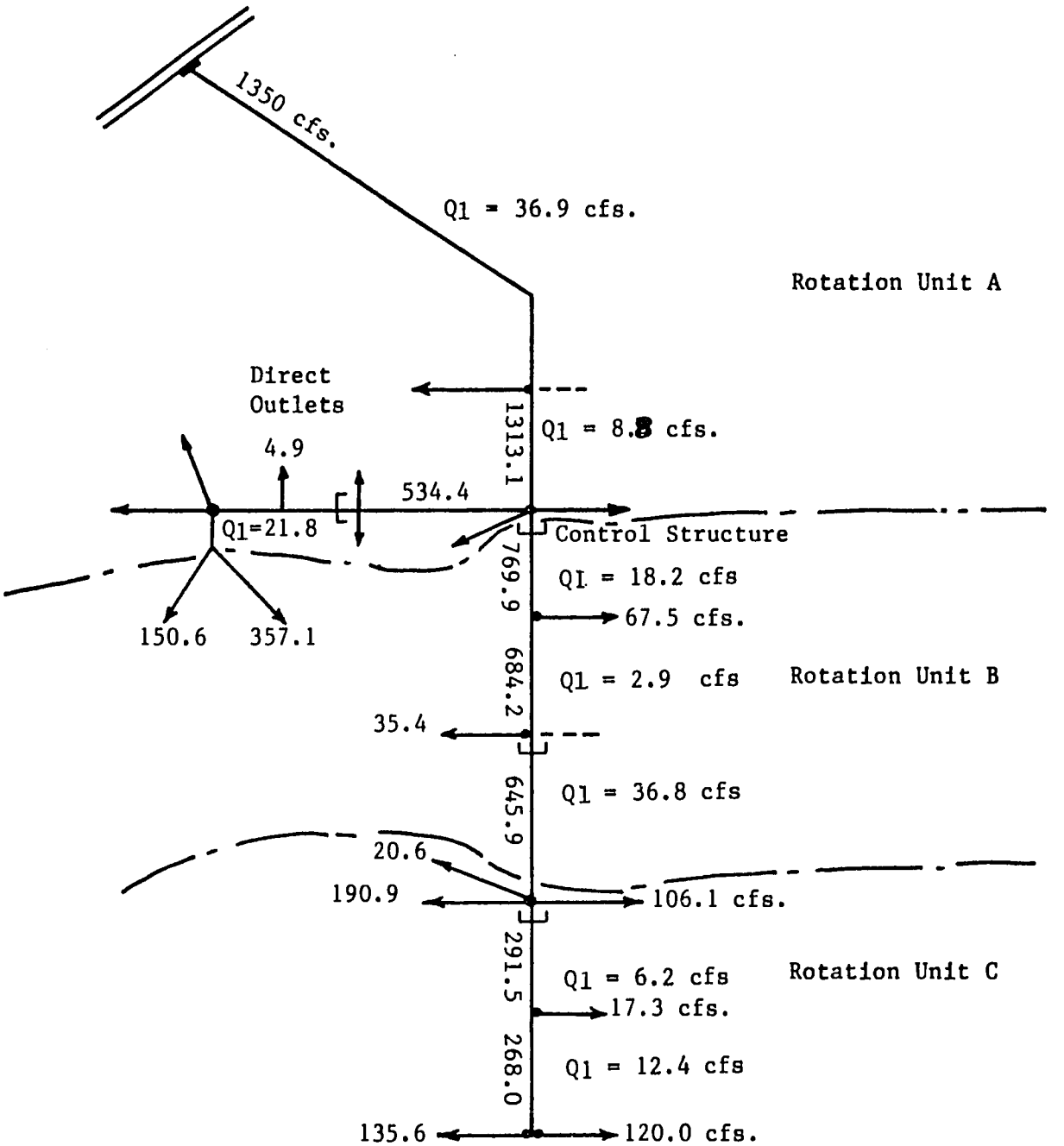

Reach	Qi (cfs)	L (ft)	Q1 (cfs)	Qe (cfs)
L1	1350.0	45600	36.9	1313.1
L2	1313.1	11000	8.8	1304.3
L8	534.4	42900	21.8	
L3	769.9	29900	18.2	751.7
L4	684.2	5000	2.9	681.3
L5	645.9	65890	36.8	609.1
L6	291.5	16464	6.2	285.3
L7	268.0	34513	12.4	255.6

EXHIBIT II-3

AFFECT OF A CHANGE IN INFLOW AT A WATER CONTROL STRUCTURE

WHEN FLEXIBILITY, F = 1.0

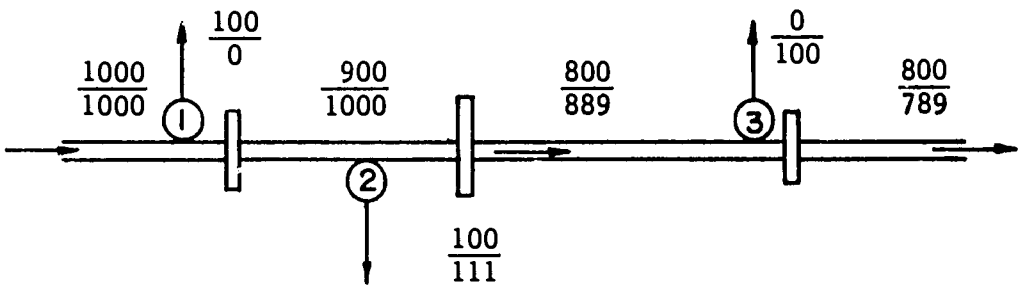

CASE A: HEADWORKS AT (1) CLOSED AND (3) OPENED
(Headworks at (2) Untouched)

$F = \frac{\Delta Q_o}{Q_o} \times \frac{Q_s}{\Delta Q_s}$ Eg. ( ) and $\Delta Q = \Delta Q_s + \Delta Q_o$ Eg ( )

For offtake No.2

$1.0 = \frac{\Delta Q_{o,2}}{\Delta Q_{s,2}} \times \frac{800}{100}$ $\qquad 100 = \Delta Q_{s,2} + \Delta Q_{o,2}$

and $Q_{o,2} = \frac{Q_{s,2}}{8}$ $\qquad$ or $\Delta Q_{o,2} = 100 - \Delta Q_{s,2}$

by Substitution $\qquad 100 - \Delta Q_{s,2} = \frac{\Delta Q_{s,2}}{8}$

and $800 = 9\ \Delta Q_{s,2}$ so that $\Delta Q_{s,2} = 88.8$ or 89 1/s

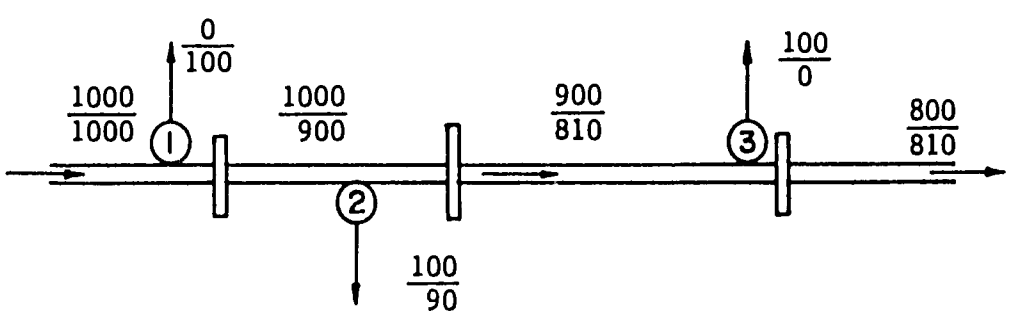

CASE B: HEADWORKS AT (1) OPENED AND (3) CLOSED
(Headworks at (2) Untouched)

Note: $\frac{1000}{900} = \frac{\text{Original Flow}}{\text{Adjusted Flow}}$ in 1/s

AFFECT OF A CHANGE IN INFLOW AT A WATER CONTROL STRUCTURE

WHEN FLEXIBILITY, F = 0.1

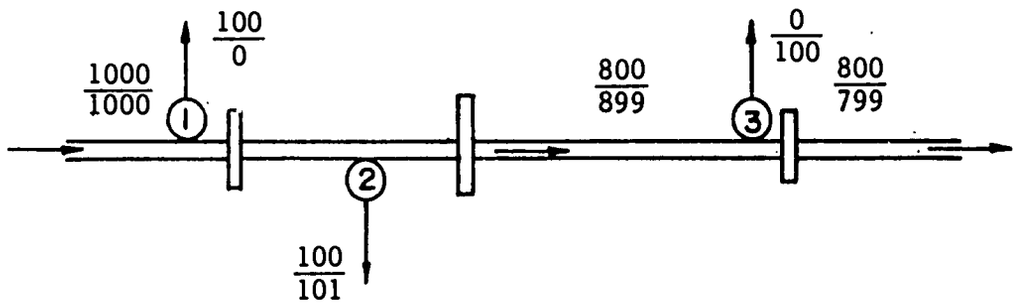

CASE A: HEADWORKS AT (1) CLOSED AND (3) OPENED
(Cross Regulator and Headworks (2) Untouched)

$F = \frac{\Delta Q_o}{\Delta Q_s} \times \frac{Q_s}{Q_s}$; Eg ( ) $\Delta Q = \Delta Q_s + \Delta Q_o$; Eg ( )

For Offtake No. 2

$0.1 = \frac{\Delta Q_{o,2}}{\Delta Q_{s,2}} \times \frac{800}{100}$ $100 = \Delta Q_{s,2} + \Delta Q_{o,2}$

and $\Delta Q_{o,2} = \frac{0.1 \Delta Q_{s,2}}{8}$ $\Delta Q_{o,2} = 100 - \Delta Q_{s,2}$

by Substitution $100 - \Delta Q_{s,2} = \frac{0.1 \Delta Q_{s,2}}{8}$

$\Delta Q_{s,2} = 99$ 1/s

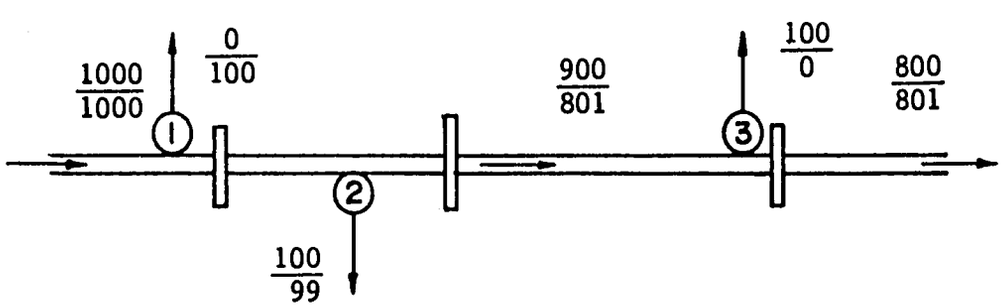

CASE B: HEADWORKS AT (1) OPENED AND (3) CLOSED
(Cross Regulator and Headworks (2) Untouched)

AFFECT OF A CHANGE IN INFLOW AT A WATER CONTROL STRUCTURE

WHEN FLEXIBILITY F = 10.0

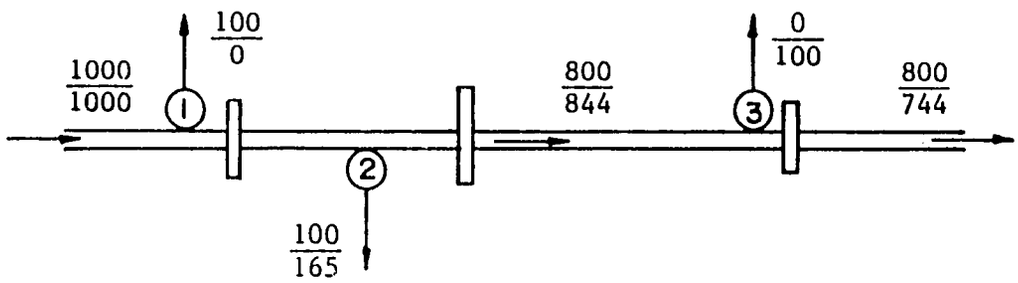

CASE A: HEADWORKS AT (1) CLOSED AND (3) OPENED
(Cross Regulator and Headworks (2) Untouched)

$F = \frac{\Delta Q_o}{\Delta Q_s} \times \frac{Q_s}{Q_o}$; Eg ( ) $\Delta Q = \Delta Q_s + \Delta Q_o$; Eg ( )

For Offtake No.2

$10 = \frac{\Delta Q_{o,2}}{\Delta Q_{s,2}} \times \frac{800}{100}$ $100 = \Delta Q_{s,2} + \Delta Q_{o,2}$

and $\Delta Q_{o,2} = \frac{10\ \Delta Q_{s,2}}{8}$ $\Delta Q_{o,2} = 100 - \Delta Q_{s,2}$

by substitution $\frac{10\ \Delta Q_{s,2}}{9} = 100 - \Delta Q_{s,2}$

$\Delta Q_{s,2} = 44.4$ Say 44 l/s

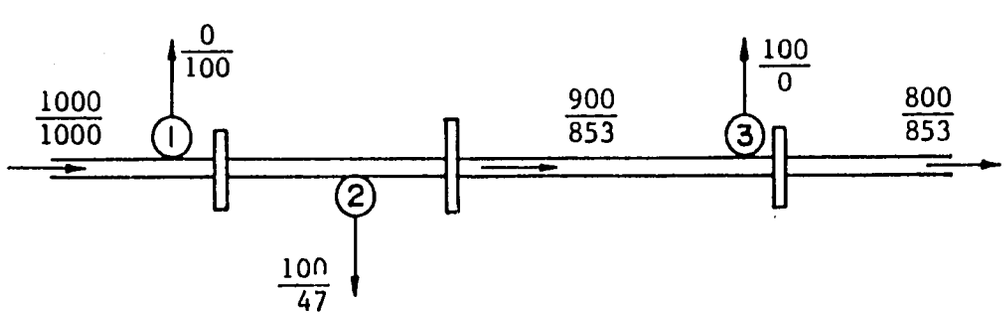

CASE B: HEADWORKS AT (1) OPENED AND (3) CLOSED
(Cross Regulator and Headworks (2) Untouched)

EXHIBIT II-6

OPERATING LOG

Position	Operators

Structure _____

Canal _____

Month Year Date	Time	Base head or Opening	Measured Discharge Cfs	Hours run	Entries
1					
2					
3					
4					
5					
6					
7					
8					
9					
10					
11					
12					
13					
14					
15					
16					
17					

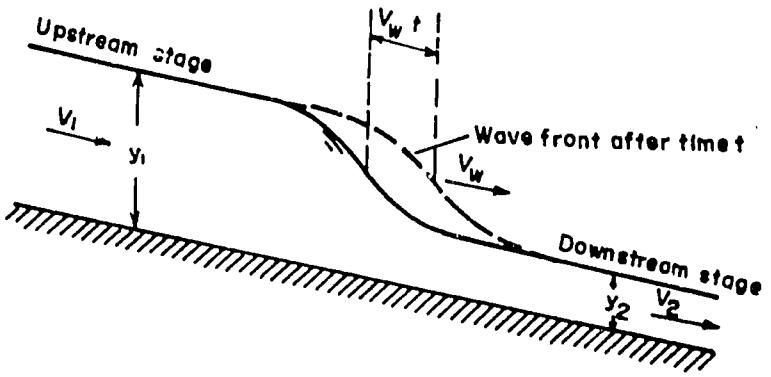

(A) Monoclinal rising wave.

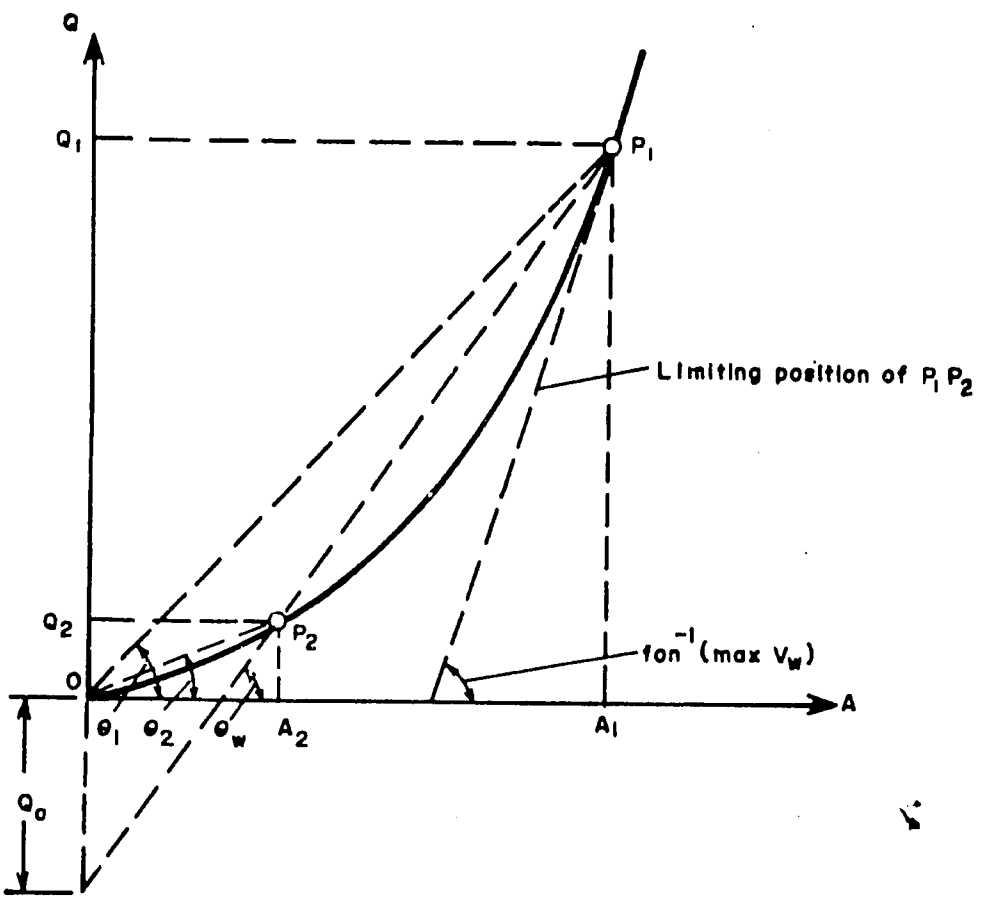

(B) Graphical interpretation of water area, discharge, and velocity relations in monoclinal rising wave

ILLUSTRATION OF TRAVEL TIME FOR DISCHARGE CHANGES

WATER BALANCE EQUATIONS

$$Q_L = Q_{mc1} + Q_{mc2} + q_{lL}$$

$$Q_{mc1} = Q_{bc} + Q_{dr} + \sum_{1}^{k} q_{wc} + q_{lmc1}$$

$$Q_{bc} = Q_{ds} + Q_{dt} + \sum_{1}^{j} q_{wc} + q_{lbc}$$

$$Q_{ds} = Q_m + Q_{ds2} + \sum_{h}^{g} q_{wc} + q_{lds}$$

$$Q_m = Q_{sm} + Q_{m2} + \sum_{f}^{e} q_{wc} + q_{lm1}$$

$$Q_{sm} = \sum_{d}^{c} q_{wc} + q_{lsm}$$

$$Q_{m2} = \sum_{b}^{a} q_{wc} + q_{lm2}$$

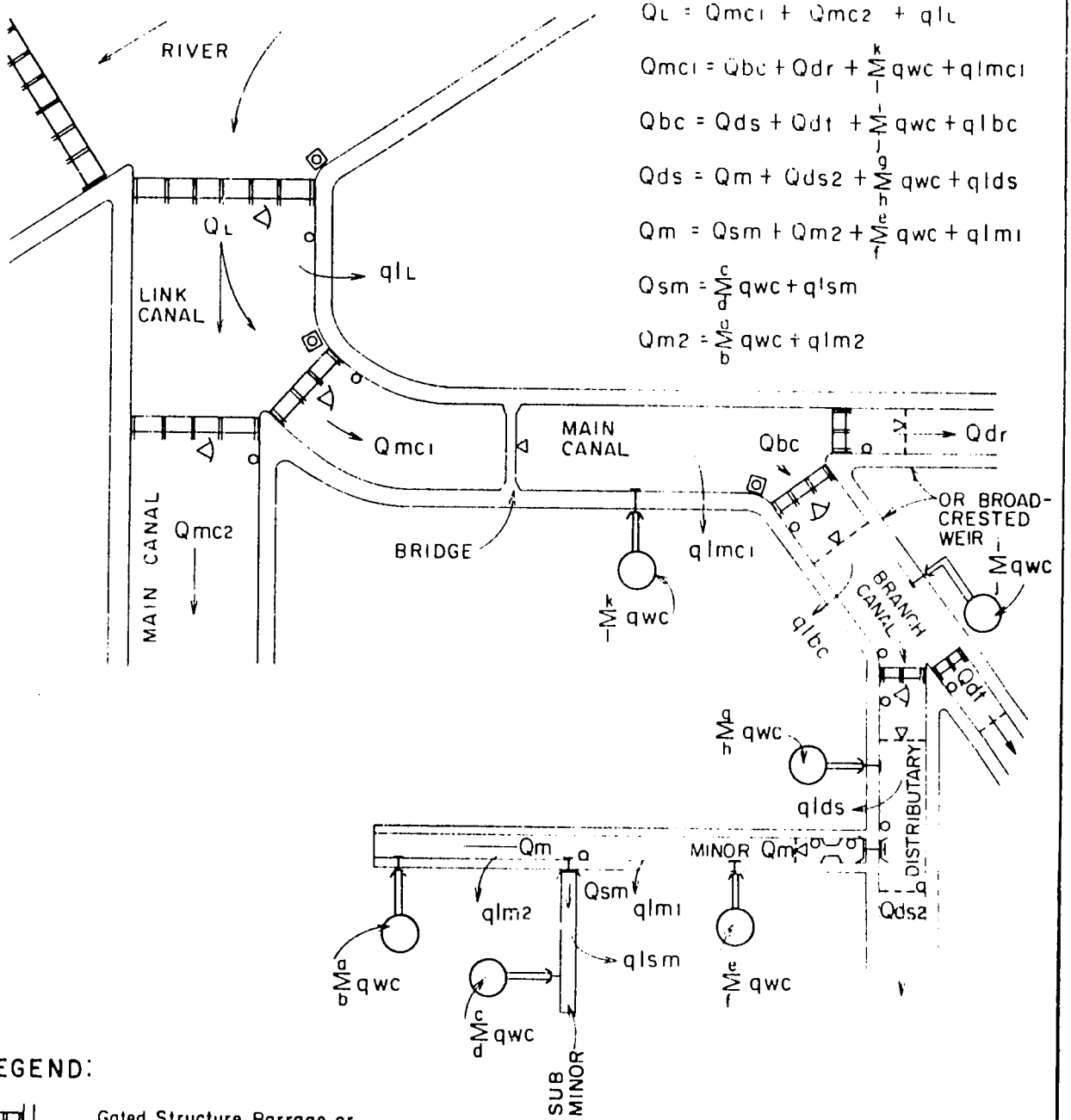

LEGEND:

- Gated Structure, Barrage or Head Regulator
- Gated Structure, Outlet
- Ungated Outlet
- (a) Watercourse (with sanctioned discharge and commanded area)
- Automatic Water Level Recorder
- Staff Gauge
- Measuring Flume or Weir
- Current Meter Measuring Section
- Gate Opening Measurement

q_{wc} = Water course discharge - cfs

q_{lx} = Canal seepage loss for reach X - cfs

$\sum_{n} q_{wc}$ = Total water course discharge for given canal reach

Q = Canal flow - cfs

SCHEMATIC OF CONVEYANCE SYSTEM WATER MEASUREMENT FACILITY REQUIREMENTS

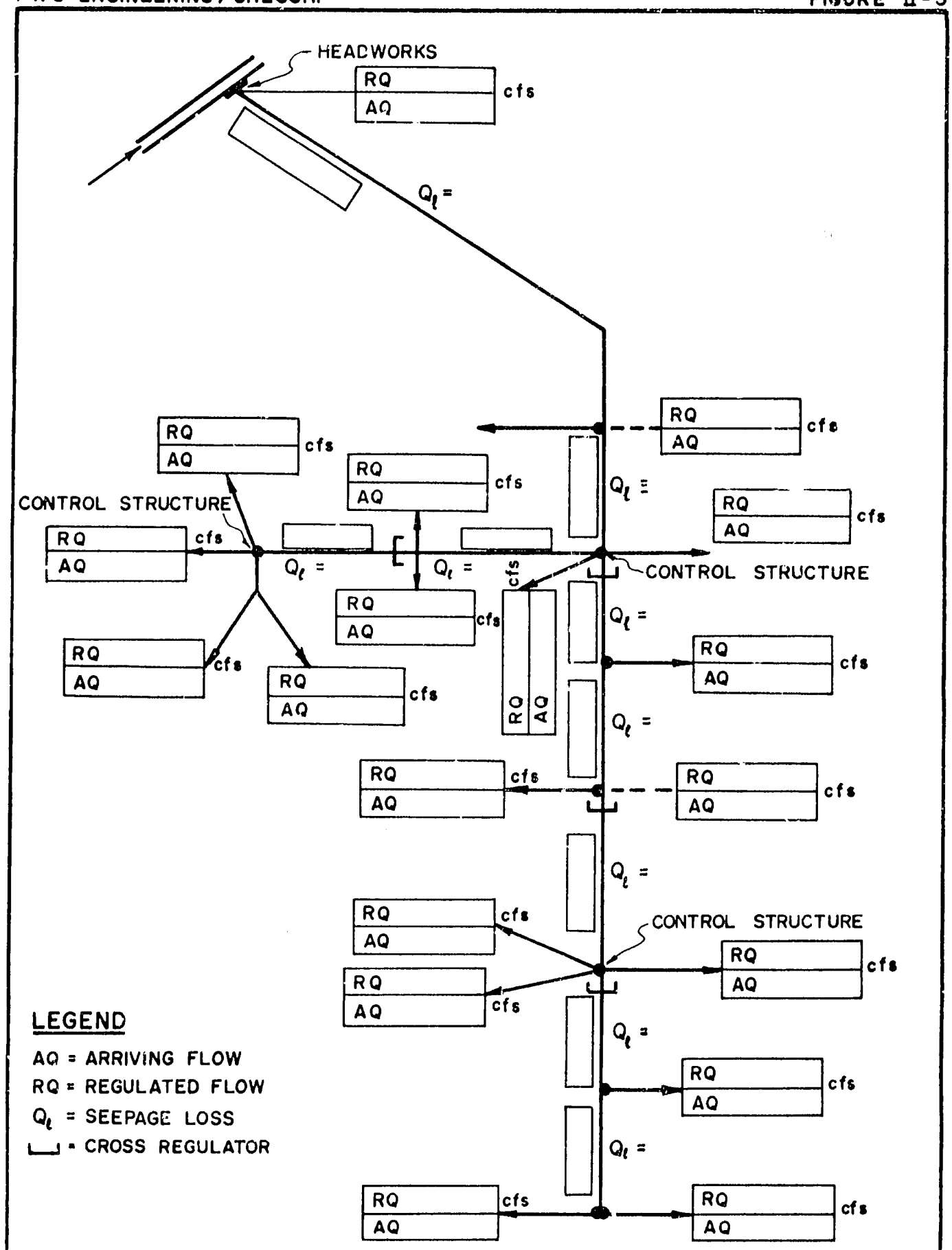

EXAMPLE OF DAILY WATER DISTRIBUTION CHART

CHAPTER III

CALIBRATION AND MONITORING

CHAPTER III
CALIBRATION AND MONITORING

Section 1 : Introduction

A. General

As indicated in the introduction to this manual there is a real lack of understanding of where the water entering a canal system really goes. There are no discharge measurements made to the outlets to determine the real outflow. If the outlet was set according to the original design, untampered and has modular flow, the canal officers assume it must be discharging the amount of water decreed in the outlet register. The H Register which has been used in the past to monitor the working head on the outlet does not reflect discharge at all, only the working head and whether flow is modular. The outlets have not been calibrated and the increase in flow due to tampering is assumed to be of the order of 10-20 percent.

Stage-discharge curves/tables are available and used at cross regulators. The stage-discharge relations are based on the design engineers' calculations and assumptions and not on field calibration. In any event, there is no program to periodically verify the stage-discharge relation. Operational changes such as increased flows, sedimentation, structural changes may all affect the rating. The biggest effect on a stage-discharge relation is the degree of submergence on the control section. Submerged flow or non-modular flow conditions significantly decrease the flow from that indicated by a stage (water surface elevation) for free flow or modular flow as it is often referred to. This is well known by both the farmers and canal officers but the percentage change and when submergence actually starts is not as well known.

Conditions at all tail clusters in a system or sub-system indicates the real need for calibration and to what degree or level it needs to be made. Obviously, if water does not reach the tailends of canals something is wrong. It is just as obvious, in this case, that the headenders are taking/receiving more water than their allocated share due to condoned or uncondoned changes

in the outlets, changes in the canal prism; and to changes in operation strategies, particularly during periods when incoming flows are less than the design flow, Qd. Less obvious is the seepage loss. Seepage losses are assumed to be 10 percent of the flow and not of major consequence. If water does not reach the tailend of each and every canal, equitable distribution does not exist.

The restoration equitable distribution of water to all outlets along a canal can be a very difficult problem. It involves many sociopolitical and/or law and order problems. The PIDs theoretically have the authority and responsibility to maintain equitable distribution of water and the right to reset any or all outlets as required. This responsibility has been abrogated to varying degrees depending on the location and local situation. The problems of discipline and enforcement lie with Government policy and are not a subject that can be solved in a technical manual. The problem exists and is wide spread. It is acknowledged as a major constraint to the equitable distribution of water.

No irrigation system or canal should be operated without knowing where all the water is going. Even if the question of equity is not to be addressed, the canal officer must know what is really happening in the canals under his jurisdiction. Improvements or changes cannot be made without this knowledge. Random tests and spot calibrations have indicated that outlets seldom ever deliver the amount decreed in an outlet register and can be off by as much as one order of magnitude (10 times). Most discrepancies are on the order of a factor of 1.5 to 3.0. Canal officers will be very surprised to learn where the water goes if they will complete the calibration of just one canal. Tables III-1, and III-2 are indicative of conditions existing in the field.

B. Level/Degree of Calibration Required

A complete detailed calibration of all structures is always the most desireable. Where conditions are such that water arrives at the tail cluster, an adequate program may only require the calibration of all water control structures or structures that provide a control section in the conveyance system and a spot check on outlets that appear to be out of compliance. In addition, four of

110

five control points should be established to monitor conditions along a distributary canal. These control points should correspond to existing water control structures or structures with a control section that can be rated such as syphons, falls, and bridges. Due to the extremely, flat gradients used in Pakistan canals, some control points may have to be established in conjunction with an outlet and using a uncontrolled canal section.
Based on the above, two levels of calibration are defined:

(1) Detailed or complete calibration of a system.
(2) Partial calibration.

Because of the complexity and time involved it may be necessary to phase the calibration of a conveyance system or sub-system over a period of time. A phased calibration program may be structured in either of two ways:

(1) An initial program that would rate all structures in a sub-system or system to be followed by the annual rating (calibration) of a group of outlets.

(2) Detailed calibration of a branch canal and then individual distributary canals spread over a period of a few years.

Rehabilitated canals should have a detailed calibration made on them as soon as they are returned to operation. This is particularly true with remodelling where the outlets have been reset to obtain equitable delivery of water as it will verify the equitability. In any case, rehabilitation provides the impetus and conditions in the field to allow the calibration to be made following the completion of construction work. This should apply even where only freeboard restoration and bank strengthening were accomplished.

C. Calibration Constituents

There are several constituents in the irrigation supply carried by the conveyance system to the watercourses including:

* water
* trash ,weeds and other floating debris
* bed material load (sediment transport process)
* wash-load (vary sediment particles)
* dissolved solids
* micro-organisms

Water is what the farmer considers the irrigation supply to be all about and it must be measured to achieve complete calibration. Sediment is an unwanted commodity that causes extra work for the farmer when he has to remove it from the watercourse. The canal officer has two unwanted constituents of irrigation supplies, debris and sediment. A considerable amount of debris is generally removed by the conveyance system's operating staff so that only the finer material carried in suspension would move through the outlets into the watercourses. In any case, the quantity is not measured.

Sediment becomes a problem when it no longer can be transported through the canal system. The deposited material causes an increase in the water-surface elevation which disrupts equitable distribution of water. Sediment deposits are made up of a portion of the bed material load. The bed material load consists of sediments usually greater in size than 0.050 mm or 50 microns; where the particle's specific weight is large enough, to be affected by gravity when suspended in water, to have a measurable fall velocity. The bed material load consists of suspended load and bed load as defined in Table III-3 and Figure III-1.

Depending on the sediment transport conditions in each canal part of the bed material load is deposited in the conveyance system and the remainder is delivered to the watercourse. The bed material load is very difficult to measure with any degrees of accuracy for a variety of reasons. The PIDs do not measure sediment concentrations except at certain barrages.

The last three constituents remain in the water delivered to the farmers fields and are not measured. These three constituents must be considered

when water is used for domestic, municipal and industrial use. Where ground water is used conjunctively with surface water for irrigation, the dissolved solids or minerals, particularly salts, become a very important constituent of water. Return flows, particularly subsurface water may also contain sufficient concentrations of salts to cause water quality problems at the watercourse or farm level. Again, this is not a subject of this manual and it only referred to so that the canal officer is aware of the potential problem.

Since sediment measurements are not made, sediment concentrations are not directly of real interest to the canal officer. He is only interested in the sediment that cannot be transported through the canals and must be removed at some time or other. The amount that has to be removed and when is of great concern because it not only affects the operation of the canal but its removal costs a great deal of money.

Based on the above, a rigid sediment calibration program similar to water measurement is not practical and calibration must be geared to a program that monitors how much, where and when sediment must be removed. A sediment monitoring program would be carried out in conjunction with a flow monitoring program and canal maintenance program.

Section 2 : Calibration Procedures for Discharge

A. General

The calibration process is like any other program in that it follows a generalized format.

* Planning
* Data collection
* Procure equipment and staff
* Establish field procedures and work program
* Preform work program
* Analyze, evaluate and document results
* Prepare recommendations

The calibration of an irrigation system is not a undertaking that requires a major effort. It does require a well trained field crew, survey and water measurement equipment and transportation. Even the data collection step can be minimized as it is used more for planning and evaluation than for conducting the actual field work.

Planning is a continual process that proceeds as the program proceeds. Initially it involves the decision of what is to be done, how to do it, what and who to do it with, obtaining necessary personnel and equipment including transportation and communication, providing any training or instruction required to make the team more efficient and preparing the work program and making adjustments as required.

B. Data Collection

Since calibration is the first step of developing a flow monitoring program it is necessary to start at the beginning. Therefore, the first step is to obtain a copy of the following data:

* System map
* Schematic diagram locating all structures
* As-built drawings or latest long-sections
* List of all outlets and RD's (location)
* Location and datum for all bench marks located near canal.
* Stage-discharge tables or curves

C. Staff and Equipment Requirements

The calibration requires two specialists; a surveyor and a hydrographer. This constitute the bare minimum and they should really have an assistant to help with all of the work. As it is, the surveyor and hydrographer would have to assist each other as much of the work requires two people.

The size of the crew depends on the speed at which the team should work. A team foreman, a 5-man survey crew, a 2-man hydrographer team, a 12-man flume measurement team, driver and a couple of casual laborers could cover one or two circles a year. Reductions would obviously decrease the work

rate. A 6 to 7-man crew should be adequate at the division level; say; a foreman (assistant SBE), surveyor, hydrographer and 3 to 4 assistants. The number of assistants depends somewhat on the number of portable flumes to be used. A 3-man crew appears to be the minimum requirement.

Transportation and communication are required for two reasons; 1) to move the team and its equipment along the canal and 2) to continuously know what the discharge in the canal is in order to establish water surface elevations at known canal discharges. Calibration should be made through out the normal range of flows.

The basic calibration equipment requirements are shown in Table III-4. A pickup truck would be the most practical transportation unit that could be used. It has the capacity of carrying all the equipment including the portable flumes or pull a boat trailer. Other vehicles including vans could be used but the field requirements must be considered carefully.

D. Field Procedures

A primary objective of this manual is to make maximum use of existing facilities for water measurement. This will require calibration and rating of various hydraulic structures. The primary problem will be submerged flow conditions. Unfortunately, in many cases, submergence may exceed 95 percent, making measurements less reliable. It is expected that gated and ungated headworks for distributaries as well other water control structures will form the basic of measurement discharge stations.

Under the best of conditions hydraulic structures built for the purpose of measuring the rate of low consist of a converging transition, where subcritical flowing water is accelerated and guided to the throat without flow separation; a throat where it accelerates to supercritical flow so that the discharge is controlled; and a diverging transition where the flow velocity is gradually reduced to an acceptable subcritical velocity and potential energy is recovered.

Under most field conditions, many hydraulic structures used for the control of flows eliminate or ignore one or more of these parts. The two most common deviations are; first, tailwater conditions that submerge the flow through the throat and eliminate modular flow and second, most canal headworks are set 90° to the streamlines in the senior canal. The latter often cause non-uniform flow patterns which affect both the water and sediment discharge patterns.

It is assumed that most of the existing stage-discharge relations are based on the engineer's theoretical discharge coefficient and design conditions. Geometry, construction errors, three-dimensional flow conditions, and sometimes a poorly selected discharge coefficient all contribute to differences between the actual flow rate and the theoretical flow rate. This is the reason that all structures should be field calibrated. In addition, changes in channel control due to sedimentation or other reasons requires a periodic check on the calibration and the stage-discharge relations.

1. Field Measurement Accuracy

The need for all calibration team members to work in a professional manner cannot be over emphasized. We are referring to the requirement that all work be accomplished in a meticulous manner includes neat and detailed notes, accurate measurements, attention to details, checking and rechecking of measurements, completion of all measurement, data collection and entries on the appropriate forms.

Discharge measurements can be consistently be made in the field with errors on the order of 2% or less if all measurements are carefully made. It is important to know which measurements are the most critical. For instance, an error of 0.010 feet (1/8th inch) in the water surface elevation (the sill-reference height) on an outlet results in an error of more than 2% in the measurement of discharge. Fortunately, errors in measurements are not all additive, some compensate each other.

Scale is an important concept to remember. This refers size of the difference with respect to the total. For instance, 2 cfs in 200 cfs versus 2 cfs in 20

cfs or 0.01 inch in 12 inches and 1 inch in 50 feet. The most important dimension is the water surface elevation. The water surface elevation, W.S.Elev., should be read to the closest 1/16th or 1/8th inch depending on canal and water surface movement or bounce. Water surface elevation is the estimate of the average of the highs and lows of the bounce.

Although dimensions or measurements may be made using inches and fractions of inches, they must be converted to feet and decimals of feet to be used in hydraulic computations. The following guides are given for the accuracy of field measurements made for calibrations:

(1) Distances along the canal for location to nearest foot.

(2) Canal width where

Canal Top Width (t)	Accuracy Closest
< 7.5 ft	0.10 ft
7.5 - 25 ft	0.25 ft
> 25 ft	0.5 ft

(3) Canal depth where

< 2.5 ft	0.05 ft
> 2.5 ft	0.10 ft

(4) Water surface elevation $\leq$ 0.01 ft (1/8 inch)

(5) Outlet dimensions to nearest 0.006 ft (1/6 inch)

(6) Gates and control structures dimensions to nearest 0.01 ft

(7) Staff gauge readings to nearest 0.01 ft

(8) Temporary bench marks at outlets to nearest 0.01 ft.

(9) Bench marks nearest 0.001 ft

2. Location of Flow Measurements

In general, flows are measured at any point where the conveyance system flows are divided between two or more channels. As an everyday procedure, flows are not directly measured into watercourses. Flows should normally be measured into all canals, although there are cases where it is not practical to measure flows in main or branch canals each time a small distributary canal offtakes. In this case, only the flow into the distributary is measured. The

117

flow in the main canal would be measured at the next downstream control structure.

Flow measurements are made in order to account for all water coming into a system as well as its distribution throughout the system. Although flows are not measured in watercourses as a routine, they should be measured when calibrating a distributary.

3. Measuring Station Controls

The conversion of a record of stage to a record of discharge is made by the use of a stage-discharge relation provided in either graphical or tabular form. The physical element or combination of elements in the canal that controls the relation is known as a control. The three major classifications of controls differentiate between various conditions are:

(1) Natural and artificial controls
(2) Section and channel controls
(3) Complete, partial and compound controls

Artificial controls are structures built for the specific purpose of controlling the stage-discharge relation. A highway bridge is not considered an artificial control even though it may become a section control. Artificial controls refer to weirs, orifices, and flumes. These structures are designed to operate with head losses; as a result they can be calibrated. Cross regulators and head regulators provide controls and can be calibrated in most cases.

Section control exists when the geometry of a single cross-section a short distance downstream from the gauge constricts the channel, or when a break in bed slope occurs at the cross-section. The constriction may result from a water control structure; or it may result from a local constriction in width which is caused by a manmade channel encroachment such as a bridge whose waterway opening is considerably narrower than the width of the canal.

Channel control exists when the geometry and roughness of a long reach of canal downstream from the gauging station are the elements that control the

relation between stage and discharge. This is the normal condition in irrigation conveyance systems because the length of canal that is effective as a control increases with the discharge. Also, the flatter the canal gradient (slope), the longer the reach of channel control.

A complete control is one that governs the stage-discharge relation throughout the entire range of flow. Complete control would exist where the section control is a water control structure with sufficient drop (fall) that it does not become submerged at high discharges. A canal may be a complete control if a control section is absent, it is concrete lined or unlined with stable banks so long as sedimentation does not occur.

Generally speaking, no single control is effective for the entire range of discharge (stage) so that the result is a compound control. A common example of a compound control is flow through a gate where as low flows, free orifice flow governs, whereas at high flows the gate is submerged due to channel control. Submergence of weir flow is also very common.

A partial control is a control that acts in concert with another control in governing the stage-discharge relation. That situation exists over a limited range in stage whenever a compound control exists. It would occur at an intermediate stage when there is a transition from one control to the other, during which time submergence is "drowning out" the section control. During the transition period the two controls act in concert, each being the partial control.

The two attributes of a satisfactory control are permanence (stability) and sensitivity. If the control is stable, the stage-discharge relation will be stable. Where the control is subject to change, frequent discharge measurements are required for the continual recalibration of the stage-discharge relation. Alluvial canals always present a problem due to the potential for sedimentation to occur in a channel. Because of this potential it is necessary to periodically check the stage-discharge relation and recalibrate when necessary. Vegetal growth can also cause the water surface

elevation to change (increase), causing a change in the stage-discharge relation.

- conventional current meter
- hydraulic structures
- tracer dilution
- floats
- sonic or electro magnetic impulses
- moving boat
- pitot tube

4. Velocity-Depth Measurements

There is no direct method of measuring discharges for calibration proposes. There are two practical indirect methods: (1) conventional current meter and (2) a portable calibrated flume. The conventional current meter method allows a direct measurement of velocities in a cross-section of flow in any canal. Dividing the cross-section into a number of subsections allows the discharge to be estimated by summing the average velocity in each subsection times the subsection area. The current meter is a portable instrument that can measure the velocity of water at any depth in a canal. Velocity is not uniform with depth of flow as it has a curvilinear profile. Since the current meter can be located at different depths, the shape of the velocity profile can be determined. Once the shape is defined, the average velocity can be determined. Current meters can not be used accurately in very small channels but the actual limitation depends on which meter is being used. The pygmy meter can be used in small channels with 2 to 3 cfs.

The portable flume is calibrated to read discharge directly. Its use is limited to small channels or watercourses because of its size. It compliments the current meter.

Conventional current meters are of two general types; 1) a propeller type with horizontal axis and 2) a cup type with vertical axis. The Price meter, a cup-type instrument with a vertical axis, was developed by the U.S. Geological Survey and was adopted by Pakistan for irrigation water measurements. The

meter is either suspended by cable or attached to a wading rod. Where necessary, weights are used to keep the meter vertical when it is suspended on a cable. Using older equipment, the operator counts the number of revolutions for a given time period using a stopwatch and a battery-powered headphone and reads the velocity from a calibration table. Modern equipment gives a direct digital readout with a built-in stop watch. A more detailed discussion of the types, uses and care of current meters is given in Chapter V.

A summary of the general steps necessary to make a current meter measurement in a channel with an irregular shaped cross-section is as follows:

(1) Select a measuring line that is at right angle to the velocity direction (shelved bridges should be avoided if possible).

(2) Divide the cross-section into a number of equally spaced vertical sections such that each vertical will contain not more than 10 percent of the total discharge.

(3) Proceeding sequentially from bank to bank, measure the depth of flow (water surface to bed) at the midpoint of each vertical section and follow this measurement with current meter measurements at 0.2 and 0.8 depth from the water surface.

(4) Calculate the average velocity in each vertical section $(V_{0.2} + V_{0.8})/2$ and the cross-sectional area of each vertical section (width times depth) and sum the products over the total width.

(5) Apply standard correction factors for vertical sections that are triangular or trapezoidal rather than rectangular and for measurement made adjacent to structures.

121

The preceding 5-step method will, in most irrigation channels, give discharges that are within 3 percent of the true discharge. Practical limits are:

(1) Depth less than 2 ft (1 ft for Pygmy Meter).
(2) Velocities less than 0.3 ft/sec and greater than 3.0 ft/sec (not meter limitations).
(3) Channel widths less than about 2 ft.

Velocity-depth measurements in regular shaped alluvial channels (circular, parabolic rectangular, triangular or trapezoidal) must be carried out in the same 5-step procedure. Although these channels may have predictable width-depth relationships, they do not have predictable velocity-depth relationships. For irregular shaped non-alluvial channels, stable velocity-depth relationships can be defined with the 5-step method while usable velocity-depth relationships for regular shaped non-alluvial channels can be calculated from theoretical hydraulics and calibrated empirical coefficients.

5. Water Level Measurements

Water levels are usually observed from permanent staff gauges. Staff gauges are graduated vertical gauges permanently fixed in or near calibrated structures for visual observation of water levels. Water level measurements can also be made by remote devices using stilling wells and float actuated electrical or mechanical recorders. A continuous record of water level observations can become a record of discharge fluctuations if a stage-discharge relation has been established by careful current meter measurements or hydraulic calculations at a site having a stable cross-section. A bench mark elevation must be established at each water control structure so that the water level elevation is known and calibrated to the staff gauge reading. The water surface level must be known throughout the length of the canal in order to be able to monitor future conditions. Temporary bench marks should be set at each outlet structure which will allow the measurement of the water surface level in the field at any time without a new survey.

The need to very accurately measure the water surface elevations is again pointed out. Small errors in the sill-reference head on outlets may result in rather large errors is estimating outflows. Measurements should be made to the closest 0.01 ft (1/8th inch).

Water levels should be recorded as elevations because they will allow the water surface to be monitored over long periods of time. Increases in the water surface level for a given discharge spells trouble. The use of elevations will make the monitoring of canal bed levels more sensible.

6. Water Control Structures

All irrigation control structures for which a stable or reliable discharge rating function can be developed can serve as a discharge measuring station. These include gated control structures (falls, regulators and headworks), ungated diversion dams, weirs, flumes and submerged orifices. Structures with a submerged flow condition (i.e., where a downstream control creates a significant backwater effect on the structure to reduce the flow rate) have more complex discharge rating functions compared to those with free flow conditions and require both upstream and downstream stage measurements.

Structures having free flowing downstream conditions will usually have a stage-discharge relation of the following general form:

$$Q = C_f A (h_u)^a \tag{3.1}$$

where Q = discharge

h_u = upstream sill-reference head

C_f = constant related to physical dimensions and turbulence

a = constant varying from 0.5 to 1.5

A = wetted area of flow of canal section

The coefficient, C_f, can vary over a wide range in non-standard installations, but it is well defined in a standard installation.

Structures having submerged conditions will usually have a stage-discharge relation of the following general form:

$$Q = C_s A (h_u - h_d)^b \quad (3.2)$$

where Q = discharge

C_s = construction related physical dimensions and turbulence

A = wetted area of flow at control section

h_u = upstream sill-reference head

h_d = downstream sill-reference head

b = constant varying from 0.5 to 1.5

The coefficient, C_s, can vary over a wide range in non-standard installations but is well defined in a standard installation.

Every water measuring device has limitations of one kind or another, and it is impossible to choose one device that can be used in all locations under all possible conditions. A major limitation to many devices is lack of available head and the need to pass sediment, weeds or other floating material. When flow conditions have changed because of modified operations existing structures and measuring devices must be recalibrated. A standard water measurement structure/device is one that has been fully described, accurately calibrated, correctly installed and sufficiently maintained to fulfill the original requirements.

All measuring devices should be field calibrated using a current meter. Adequate discharge measurements can also be obtained from non-standard structures such as gates in a cross regulator, by calibration using current meters. Calibration tests should be made over the full operating range and curves or tables prepared from the data. Theoretical design coefficients are generally not accurate enough for field use. Once calibrated, a structure can be used to assist the calibration of the system downstream.

6. Outlets

There are three general types of outlets that predominate on all canals;

* Adjustable orifice semi-modular, AOSM or APM
* Open flume, O.F.
* Pipe, P.

The term APM is still used in the Punjab to refer to an AOSM type although strictly speaking APM refers only to Crumps original adjustable proportional module with the sill levels set up 6/10ths depth. The original APM did not have sufficient silt draw and caused the canals to silt up. The AOSM is normally set near the canal bottom.

AOSM/APM's are normally located at the headend of canals because they can be set at any depth. Open flume types are usually located in the tailends because there is a limit on the throat depth, they operate as safety valves because weir flow governs and the sill-reference head relation is to the 1.5 power.

Outlets are calibrated by measuring the upstream and downstream sill-reference heads on the structure being rated, measuring the control section area and measuring the discharge at a point downstream of the structure using a portable flume or by current meter measurements in the very large ones. The measured data is then used with the appropriate equation to determine the discharge coefficient.

Care must be taken when the portable flume is used in the watercourse. The flume will cause the water surface upstream of the throat to rise. In many cases this will cause submergence on the outlet which will reduce its outflow. Increasing the submergence on an outlet already affected will further reduce the outflow. Therefore, sill-reference head measurements should be made both before and after the flume is inserted into the watercourse. The discharge coefficient is computed using the sill-reference heads(s) made after the flume is in place and the watercourse flow has stabilized. Once the discharge coefficient has been determined, the original flow is estimated using the sill-reference head(s) made prior to inserting the flume.

Several measurements should be made at each outlet at different water surface elevations. This can be done over a period of time or it can be done over a short period of a few days. The average discharge coefficient for each condition should then be used. The calibration over a range of water surface elevations will also determine if the discharge coefficient will remain

125

constant. It is also needed in submerged flow conditions to evaluate the effects of submergence on the discharge coefficient.

Orifice flow conditions may not be applicable once the head on the outlet is less than height of the opening above the top of the opening. Additional details on outlets is contained in Chapter IX.

E. Seepage Losses

Seepage losses as generally determined by field measurement not only include the actual seepage losses but usually include all other losses or outflows that are not measured at the outlets. The three most common would be the evapotranspiration loss from the water surface and the plant material growing on the bank, hidden theft and domestic use. For operational purposes, it is more than adequate to use a single value because the canal officer only needs to know what the total abstractions are; releases to outlets and losses within a reach to estimate the water that will enter the next reach or need to be divided at a cross regulator.

In any case, a canal officer needs to know where all the water is going if he is to have water reach the tail cluster.

There are a number of methods for measuring the seepage loss or seepage loss rate. These methods can be classified as field methods and laboratory methods. Each method has particular characteristics which make it more appropriate for certain given conditions. There are only two methods of measuring seepage losses in a canal system that can be used in field investigations:

* Inflow-outlet method
* Ponding method

1. Inflow-Outlet Method

The inflow-outlet method utilize flow measurements made at the upstream and downstream ends of the reach of canal being studied. The quantities measured into and out of the reach are carefully measured and the difference

is all attributed to seepage as indicated above. In a sense the method is just simple accounting. The measurements can be made rather easily and do not interfere with the operation of the canal.

The inflow-outflow method is best adapted to measuring the loss in a long-section of canal in which there are few diversions and in which the loss rate is high. Still it can be used in short reaches wherein the loss rate is high. The results are no better than the accuracy of the measurements and it is difficult to attain a degree of accuracy that will reflect the true losses in the canal. As has been pointed out many times in this manual much depends on the relative magnitude of what is being measured with regard to the over all accuracy of the method of measurement. The lower limit on measurement accuracy is in the order of 2 percent. Therefore, differences of less than two percent are masked or multiplied out of context. Long term monitoring will tend to average out the variations and provide values that can be used to predict the losses and thereby making it easier to serve the tail clusters.

2. Ponding Method

The ponding method requires the measurement of the rate of drop in the water surface of a pond formed in the section of canal being tested. This requires that operations be suspended in order to dam up the canal in a series of individual ponds. By knowing the geometric properties of the pond, it is possible to compute the seepage loss and loss rate.

A detailed survey of each pond is made by taking a series of cross-sections. From these sections the surface area for each increment of elevation can be determined. Volume is determined by average end area method for a given difference in elevation (drop in water level). The volume of seepage loss is equal to

$$S_1 = \frac{(A_1 + A_2)}{2}(E_1 - E_2)$$

Where the subscripts refer to corresponding elevations and area at the beginning and end of the test period. The daily volume loss is determined by

127

ratioing the test period time, T, to 24 hours and converting it to a flow rate by dividing by 86,400 sec/day so that:

$$S_1 = \frac{(A_1 + A_2)}{2} \frac{(E_1 - E_2)}{T} \frac{24}{86,400} \quad \text{cfs} \tag{3.3}$$

A modification of the ponding method involves the addition of water to the pond to maintain a constant water surface elevation. The volume of added water is carefully measured and is considered to be equal to the seepage loss. The rate of loss is established by the elapsed time.

Although an objection is often raised that still water may seep at a different rate than flowing water, the difference is probably small in comparison to errors associated with other flow measurement errors.

The ponding method produces the best results, and measurements obtained with it are generally used as the standard of comparison for seepage measurements obtained otherwise. This method is particularly useful in measuring small seepage losses. However, it has serious disadvantages. Ponding tests can be made only when the canal is not in use. Constructing dikes to form the ponds is expensive. Providing water to fill the ponds sometimes involves difficulties, particular when the ponds must be filled several times before the seepage rate becomes stabilized. Filling the ponds, also, is a problem. If ponds are to be filled by pumping, expensive pumps must be installed. For these reasons, the ponding method is not used unless the importance of the tests warrants fairly large expenditures. Furthermore, although the ponding method gives the average seepage from a pond, it does not show the variation in the rates from different parts of the pond.

3. <u>Wetted Perimeter</u>

The wetted perimeter, WP, for trapezoidal canals is given by the equation

$$WP = b + 2h\,[(z_3)^2 + 1]^{0.5} \quad \text{ft}^2/\text{ft} \tag{3.4}$$

128

where

b	=	bottom width of canal
h	=	average depth of canal
z_3	=	horizontal side slope component where z:1

Field conditions in alluvial canals are such that the trapezoidal side slope is not always well defined. The natural bank slope approaches a value of $z=0.5$. The estimate of z is also a bit arbitrary since the intersection of the bank and the canal bed is not well defined.

The wetted perimeter will change as the discharge changes in the canal; increasing or decreasing in proportion to the corresponding change in discharge. The design custom for canals in Pakistan has been to use Lacey's width predictor as an estimate of wetted perimeter when estimating seepage losses. The Lacey wetted perimeter predictor, P, is:

$$P = 2.67\ (Q)^{0.5} = ft^2/ft \qquad (3.5)$$

The use of Q to determine the wetted perimeter should be continued for purposes of system operation as it will allow the canal officer to make continuous estimates of seepage losses without having to have a calibrated WP relation for each reach of canal. The accuracy of the estimated value of P is well within the seepage loss rate values used, assuming that the loss rate was calibrated using the Lacey estimate of P.

The total wetted perimeter in any reach of canal is the average wetted perimeter times the length, L, of the reach. The general practice is to use the discharge entering the reach to determine the wetted perimeter. This definition is applicable to system operations because the flow going downstream is easily computed at each division point or outlet.

The value 2.67 should be reduced in the Sind to 2.5 because the canals are a bit narrower and have slightly smaller width to depth ratios.

4. Seepage Loss Rate

The seepage loss rate (SLR) refers to the loss of water per unit area of wetted canal. There are two forms of loss rate in use;

* Volume per unit area per day
* Flow rate per unit area

In Pakistan, canal design was based on using a flow rate. The standard SLR is 8 cfs per million square feet of wetted perimeter (8×10^{-6} cfs/ft^2). This can be converted to a daily volume rate by multiplying it by 86,400 sec/day so that the equivalent rate is 0.69 ft^3/ft^2/day.

The seepage loss rate can be determined from the total seepage loss, SL, in a reach of canal from the following expression:

$$SLR = \frac{SL}{PL} \quad \text{(as a flow rate)} \qquad (3.6)$$

where

P = wetted perimeter using Equation 3.4 or 3.5.

L = length of reach

Because the inflow-outflow data will be used to operate and monitor conditions in the canal systems Equation 3.5 is recommended and the units remain in cfs/ft^2.

5. Evaluation of Losses

An example showing the determination of seepage losses is presented in Exhibit III-1. These are the seepage losses determined from the calibration of 29.2 RD of the Warsak Gravity Canal in NWFP. The seepage loss rates based on Lacey's wetted perimeter ranged from 0.9 to 52 cfs/million ft^2 which is essentially two orders of magnitude.

130

The average SLR used in designing canals, 8 cfs/million ft^2, lies between the values listed above. Its use for the full length of 29.2 RD would give a total seepage loss of 8.49 cfs or roughly 50% of the measured rate.

Exhibit III-1 indicates that low seepage rate values can be measured with careful and accurate work. Canal officers usually have some idea of how much additional flow is required in a canal to get water to the tailend. This often is the difference between the theoretical and real seepage loss.

Section 3: Monitoring Programs

A. General

The monitoring of an alluvial irrigation canal involves two components; 1) flow, and 2) sediment distribution. They can be made independent but the usual practice to save time, effort and cost is to combine the two. The equitable distribution of water to each watercourse is the ultimate goal of the irrigation system because this, in part, is what the farmers want. Sediment is an unwanted commodity as neither the farmer nor the system's management want it as both are required to desilt any channel that has an excessive amount.

A monitoring program is essentially a record keeping program on all aspects of system operations. Monitoring programs can be classified according to a time frame as:

* Short term
* Intermediate
* Long term

The short term aspects is the daily checking/supervision of accounting where the water is going. The discharge measurements made at all head and cross regulators allows the SDO and XEN to check on the distribution of water. The weekly monitoring program would generally involve the consolidated flow records, water surface elevation reports and discharges records to watercourses if they have been calibrated. Monthly, semi-annual and annual

131

records are considered intermediate records and two or more years of record constitute long term records.

Monitoring programs can also be classified according to the amount of information collected and the degree or intensity of the monitoring effort

* Minimum
* Intermediate
* Complete or detailed

The minimum program would consist of maintaining discharge and water surface elevations at all water control structures; cross and head regulators, falls, siphons and water measurement structures. Intermediate program would include control points located along each canal with recorded water surface elevations and stage-discharge records at key locations. The complete record or delivered program would include the measurement records of water delivered to all outlets and control point flows.

Monitoring programs can be initiated at any entry level and can then be upgraded over a period of time as expertise and need for more data grows. In Pakistan all canal systems should be returned to the intermediate level as quickly as possible. This being what the "Manual of Irrigation Practice" required and was in place at one time.

The question is still open on how complete a monitoring system can be developed without incurring the expense of installing measuring weirs or flumes in each of the more than 84,000 watercourses in Pakistan. Theoretically, each watercourse (mogha) could be calibrated with a stage-discharge relation. The practicality of achieving this is still open to question for the following reasons:

* discharge coefficients vary considerably from structure to structure
* water surface elevations may be difficult to obtain to the accuracy required.

132

* the proportionality of the discharge coefficient over range of operating levels
* time and cost of rating an outlet is unknown
* sociopolitical repercussions
* value and real need not determined
* tampering and other discipline related problems would change ratings

The following paragraphs indicate the requirements of each level of monitoring and will provide information on measurements, data processing and records.

B. Monitoring Flows

1. General

Flow monitoring is the development of sufficient record keeping to allow the canal officers to determine where the water is going and to monitor any changes in distribution that might be occurring.

There are three components in a flow monitoring program:

* Discharges
* Water surface elevations
* Travel time

The first two are the more important and involve long term programs as well as the day to day records.

The day-to-day and long term goal of the irrigation system is to maintain equity of distribution to all watercourses. Records are required to determine where the water is going and to assist in the process of providing accountability of water. Changes in water surface elevations reflect changes in the flow conditions in the canals and would be one cause of changing the equitable distribution of water between water courses.

In that rare case when the flow of water reaching the tailend is greater than anticipated, no changes would be made unless safety is a problem. Any future sedimentation in upstream reaches of the canal would tend to cause the flows reaching the tailend to decrease. The more normal situation would be the condition where flow reaching the tailend would be considerably less than the required amount.

To increase flow at the tailend requires that the water surface level be lowered in the head reach of the canal or the sills of the outlet structures be raised. The plotted long-section would indicate which reaches showed the surveyed water surface above the design level. This would be the area where the outlet sills should be raised to reduce inflows to the watercourses. Calculations can be quickly made to determine if adjusting these outlets would provide the necessary increase at the tailend. Care must be taken because increasing the discharge towards the tail would also mean that outlets located between the adjusted outlets and the tail structure would gain a slight increase in discharge due to the raising of the water level in the canal.

Control points are established along the canal at various outlets to allow canal water surface levels (WSL) to be monitored without having to continuously check the WSL's at each outlet. Control points should be established to coincide with the design reaches. A canal reach is designed with a constant bed width and depth until the discharge is decreased by 10% due to outlets and seepage. This length of a each is somewhat arbitrary as it will normally coincide with a water control structure or outlet. Therefore, a canal with 40 or 50 outlets may have only 10 or 12 design reaches.

The flow control points would be used to determine which reaches removed more than their share of water. Once the cause of the excessive withdrawal is determined corrective measures would be taken. The most probable cause would be outlets discharging more than the sanctioned allocation. Excessive seepage losses could also be a cause. Where the magnitude of the seepage loss can be determined, it may be possible to increase the total or design inflow make up the difference. The actual seepage losses would be used to determine the sanctioned flow rather than the 8 cfs per million square feet

used in design. Where the design inflow can not be increased, the actual losses must be prorated across all outlets which would, in fact, slightly reduce the sanctioned flow to each outlet. The outlets would then be reset to meet the new flow requirement plus making any other adjustments required to deliver water to the tailend.

During the calibration process, stage-discharge curves are derived for each control point based on current meter measurements. Once this has been accomplished, and the canals are set with respect to all the outlets it is possible to derive a discharge curve for each control point based on flow entering the canal at the headworks and that which arrives at the control point. The total abstraction would be the sum of the intervening outlet discharges plus seepage losses. This curve can be equated to the rating curve for the control point.

This can be rather a costly process to make up for inadequacies in the design process in order to achieve equitability. The magnitude of the problem at the tailend determines the extent to which physical changes are made during the calibration process.

2. Discharge or Inflow

The calibration of flows throughout a canal or conveyance system requires an accurate measurement of discharges and water surface elevations. This includes the initial inflow and any branching flows within the system. Control of water requires a detailed knowledge of what is going where. It is basically a volume control or book-keeping system; i.e., what comes in must go out.

Discharge measurements are best made at a structure that controls the flow. Existing structures can usually be calibrated to provide a stage-discharge relation. Headwords, falls, siphons and bridges can be used. Particular care must be exercised during the calibration process to cover the range of expected flows and to be sure that submerged flow conditions are properly handled.

There are many water measurement structures that can be constructed in canals. The broad crested weir appears to be a good choice because it can provide accurate results with a high degree of submergence and is not as sensitive to construction problems, weeds and sedimentation as some other structures. In any event, some form of water measurement must be established. All water measurement structures must be calibrated by standard current meter measurement techniques.

3. Calibration of Water Surface Levels

The first step in the canal calibration process requires an accurate field survey be made for the canal or system being calibrated. Permanent metal bench marks are established at all water control structures to provide a readily available reference elevation. The next step is to determine the reduced level (temporary bench mark) at the top of each outlet structure that can be used as the reference elevation. This will facilitate the periodic measurement of the water surface elevation at a later time as shown in Figure III-2.

The initial calibration of the water surface is made by operating the canal at design discharge and recording the exact elevation of the water surface at each outlet and other design locations. These will probably deviate somewhat from the designers FSL line. The deviations are due to the variable conditions of width and depth that exist in the field from the uniform prism configuration assumed by the engineer. Also, backwater conditions may affect the water surface elevation slightly. The actual water surface profile should be plotted on the "As-built" drawings shortly after rehabilitation is completed and the canal is returned to service.

4. Control Point Discharge

Control points are established along the canal for the purpose of monitoring the operation of the system. The selection or setting of control points depends on their intended purpose. A flow monitoring program would require control points to be set at the ends of each "design reach" in the canal. This would provide information on cross-sections, discharge and depth of

flow. Locating the control points according to the design reaches, allows a ready access to data used for design to be used to monitor conditions.

Initially a theoretical stage-discharge curve can be prepared for each control point. Current meter measurements made for a range of constant canal inflows at each control point would provide a calibration of the stage-discharge curve. Each control point discharge can then be related to the canal inflow discharge at the headworks. That is, if 300 cfs is entering the canal it means that at point A it will be 283 cfs, point B 251 cfs and on down through the system. Calibration makes it easy to check conditions within the system. If there a given amount of water coming into the system, the water surface will be at a corresponding elevation at each control point and hence at each outlet. Significant deviations (say 0.1 foot or more) would mean problems within the system and the possibility of loosing equitable distribution. A continuous monitoring of the tail cluster would quickly confirm this.

The main reason for calibrating each control point for discharge would be to determine seepage losses in each reach of canal. It is fairly apparent they will not be equivalent to the 8 cfs per million square feet of wetted perimeter used in design.

5. <u>Outlet Discharges</u>

The real need for outlet measurements can be made by observing conditions in the tail clusters. If water surfaces are near where they are suppose to be according to the design very little adjustment is required. If the arriving flow is much less, then it will be necessary to measure and survey each watercourse in order to reset the outlets as this is the only method that will achieve an increase in the amount of water reaching the tail cluster. Channel deepening is only a temporary measure since it flattens the slope.

A detailed calibration would require the measurement of water flows from each outlet at the canals design discharge. The summation of outlet discharges between control points would allow a comparison between

sanctioned and actual diversions. It would also allow an accurate determination of seepage losses.

It is suggested that calibration of outlets be made at three canal inflow discharge rates; 100%, 80% and 65% of design flow. This would allow an evaluation of proportionality of flow as well as providing three points to determine the discharge coefficients(s) from. The flow in each watercourse is measured using a portable measuring structure such as; cutthroat flume, long throat flume or broad crested weir.

The establishment of a rating curve for each outlet would provide the PID accountability of water. The farmers via a water user association would then be able to monitor the water they receive. The combination of water level data, discharge data and seepage loss data would be accurate enough for control purposes. Two other problems would still remain; (1) prediction or reliability of inflows by day or week and (2) affects of sedimentation during the irrigation season. Monitoring and a sediment trap should solve the second.

6. System Losses

Where water reaches the tail cluster so that field conditions are essentially the same as those used in the design (water level, outlet dimensions and sill level), the measured outflow to individual watercourses is not required to monitor the flows in a given reach of canal; it is only the total outflow or inflow to the downstream reach that must be monitored. The exact details of individual upstream extractions are not required so long as conditions closely approximate those used in design and full accountability is not required. Losses in any given reach could be estimated by subtracting the combined design outlet extractions as per the outlet register from the difference between the measured inflow and outflow of the reach. The inflow-outflow method is in reality a simple book keeping type of exercise and computation. The magnitude of the loss is only important in terms of providing information for system water management (distribution) and future design efforts. As long as when the design discharge enters the system, water arrives at each control point at the same elevation year after year and design flow reaches

128

the tail cluster is it a stable regime canal operating equitably. When this is not the case, it will require the additional measurements discussed above in order to provide a complete calibration of the system.

7. Records

As indicated above, as long as conditions remain stable or unchanging everything is operating correctly. But, as soon as they begin to deviate, it means changes are occurring and problems are starting. Except for conditions at the tail cluster, monitoring can not be left to memory and visual observation in alluvial canals because the changes are often subtle and occur gradually over a period of time. Numerical records must be maintained that can be reviewed periodically to ascertain where changes are occurring.

A monitoring program provides the means of keeping track of the water surface profile. It can also be used to verify and record flow data for accounting purposes. It is a very useful tool in isolating problem areas such as sedimentation, erosion and tampering. Observations made at the tail cluster indicate the existence of a problem but does not define it.

Monitoring can also be tied to inspections of the canal to ensure that the control points are visited as required. This could be on a weekly basis. Exhibit III-2 presents a form that can be used for this purpose. The method shown on Figure III-2 can be used to make the measurements as long as reduced levels are established at the measuring points. Exhibit III-3 is a modification of Exhibit III-2 in that records over a period of time are recorded on it. It can be set up to record either weekly or monthly entries. During initial shakedown periods it would be better to record weekly. Once it has been determined that conditions are reasonably stable monthly records should be adequate. Where tampering or theft of water appears to be a problem then daily observations or even more likely night time observations will be required to isolate the theft if other means are not successful. The use of the above to detect thefts has to depend on scale and the ability of the control point to monitor the change. The loss of 1 or 2 cfs from a supply of 200 cfs will not be noticed whereas if it is abstracted from 20 cfs

it should be. This means that flow monitoring is more useful in determining long term changes than instantaneous.

C. Monitoring for Sediment Management

1. Background

The measurement of sediment transport is difficult expensive and time consuming. As indicated in Section III.1.C above, no program for directly measuring sediment transport is recommended.

A basic design tenant or criteria for sediment control is to transport it as far down through the system as possible with the ultimate goal of carrying the entire bed material load to the farmers fields. The latter seldom happens. Canal and watercourse slopes usually tend to flatten rather than steepen due to topography and the process of extending the system as far as possible. Therefore, sediment deposits in the tail reaches of canals and in the head reaches of watercourses.

Sediment removal is a maintenance function. It is also a very costly process. In general, the smaller the canal the cheaper it is to remove. A single, point of removal in a sub-system may be more economical than several points or desilting tail reaches of distributary or minor canals. Sediment traps are used for single point collection and removal.

As indicated many times in this manual, sediment deposition causes the water surface to rise in the canal, due to the conservation of matter. The rise in the water level causes a change in the flow conditions. The resulting back water curve will extend upstream and all outlets affected by the increase in water surface level will have an increase in outflow. The combined result is a shortage of water at the tail cluster. Water shortage is an operation problem that will require maintenance work to solve.

Sediment management has two main objectives:

* maintain water distribution
* minimize desilting cost.

The sediment monitoring program must provide the SDO and XEN with the information that will assist him in meeting the operation and maintenance standards. The basic monitoring program involves:

* monitoring water surface levels
* measuring sediment deposition in the canal prism.

Sediment deposition can be controlled to a large extent by locating a sediment trap just upstream of the problem reach. The exact procedure for managing sediment deposition in a canal or sub-system downstream of a sediment trap are only partially understood. There is no data base available in Pakistan on which to prepare a detailed canal specific management program. Therefore, newly rehabilitated canals with a sediment trap will require a shakedown period to learn how to manage the canal for sediment and develop the minimum monitoring program necessary to provide the canal officers with the information on when, where and how much sediment is to be removed.

2. Control of Sediment Transport in a Canal

Moving water has the ability to carry a certain amount of sediment based on water velocity, grain size and distribution, specific gravity and temperature. Depending on the velocities and water depth in the canal the carrying capacity can change. In general, it can be stated that with higher velocities more sediment can be carried through the canal, a reduction in flow velocity introduces a reduction in carrying capacity. The hydraulic design of a canal is based on a uniform transport capacity along its entire length. This requires the bed slope to progressively steepen towards the tailend of the canal as water and sediment are withdrawn at the outlets; thus, the velocity remains nearly constant. Sediment traps are required when the incoming sediment load is greater than the transport capacity of the canal. For example, if the incoming load is 180 ppm and the transport capacity is only 145 ppm, 35 ppm must be removed by the sediment trap to prevent deposition in the canal.

For the sediment balance to be in equilibrium, the 35 ppm should be removed continuously. A sediment trap will not accomplish this directly. If the basin is empty, most of the bed material will drop out near the entrance so that the water existing the trap will have a very low bed material concentration. Because the moving water has the capacity in this example alluvial canal to carry 145 ppm, the water will immediately start to erode the canal bed downstream of the trap. This erosion process will continue as the water moves downstream until the transport capacity (145 ppm) is satisfied. Ultimately this could result in a flatter slope in the canal downstream of the sand trap.

The canal must be operated in such a manner that the downstream erosion is not allowed to continue for a long period of time because it may disrupt conditions in the watercourses or in the downstream channel(s).

It does not appear appropriate that a system can be allowed to be operated in a manner that will remove the 20% of the total annual incoming load in a single block of time which would allow both erosion and re-deposition of sediment to occur simultaneously during the rest of the year. Theoretically the rate of sediment deposition would be faster than erosion so that in theory it would just catch up on the last day of the year. If the deposition front caught up to the erosion earlier, sedimentation would occur in the tailend of the canal.

Unfortunately, the above may not occur because even before the sediment trap is full, the upstream (beginning reach) would not be able to pass a concentration of 180 ppm and some sedimentation would occur there. This would tend to raise the water surface which in turn steepens the slope and results in a slightly higher velocity and thus a higher carrying capacity downstream of the deposition. This essentially returns the canal to its original condition or mode of behavior prior to installing the trap. Sediments would continue to deposit in the head reach and in the sediment trap or downstream of it while the tailend continues to erode. Figure III-3 depicts what has been discussed here.

Controlling this situation to obtain a sediment balance in a canal appears difficult. It appears that the sediment trap should be cleaned more often than just during the annual closure period.

The construction of a dual chamber sediment trap would allow the opening and closing of each chamber as needed to control sediment entering the canal and cleaning as required.

3. Function and Types of Sediment Traps

As indicated above, sediment traps may be located within the conveyance system, usually towards the tailend. Therefore, there will not be any water available that can be used for flushing because; 1) there are no drains to carry the flushed or excluded water, 2) there is insufficient head available for obtaining flushing velocities, and 3) use of water for sediment flushing or exclusion would reduce the irrigated area. Thus the types of self cleaning sediment traps of excluders used a headworks are not appropriate for use within the conveyance system.

There are three basic types of sediment traps that are appropriate for use within alluvial canal systems:

* Dual chamber
* Short wide basin
* Long narrow basin

These sediment traps can be cleaned by mechanical equipment, donkeys, head basket or any combination of the three. Desilting is normally carried out by local contractors. Therefore, it is important to have good information on the quantity to be removed as this is the primary pay item. Also, desilting costs have to be budgeted so that considerable lead time and an accurate data base are required.

a. Dual Chamber

The dual chamber sediment trap utilizes two short, narrow sediment basins. Flow is controlled by gates located at each end of the basins. Therefore, one

basin can be closed off and desilted while the second remains in operation. The method of desilting is unrestricted as water could be drained from the sediment material. Because the chambers are relatively short, desilting can be accomplished on a more frequent basis and the by-passing of silt can be more easily controlled. This type of structure is more expensive than the other two because of the control gates and related structure. A splitter wall dividing the two chambers would also add to the expense where sufficient land is not available. The dual chambered sediment trap is better suited to the branch canals or large distributaries.

b. Long Narrow Basin

The long narrow sediment trap is constructed using the design canal width but with the bed level depressed 4 to 6 feet. Where the expected sediment is very fine sandy silts, sediment removal by equipment will be difficult under saturated conditions. Therefore, the canal most likely would have to be closed down for cleaning. Canal closure is limited to the annual maintenance closure period or possibly to the low irrigation demand period during harvesting. The sediment basin would be required to hold the entire amount of sediment that is expected to be removed in one year. The portion of the annual sediment load requiring removal could easily exceed 200,000 ft^3 and thus, the length required could approach several RD depending on depth. The advantage of this design is that the cost is almost nothing and the length and depth can be adjusted with little additional cost other than, removing soil. The disadvantage appears to be the control of sediment in the system.

c. Short Wide Basin

A short wide basin can be used where it is desireable to confine the location of the sediment removed from the trap. The limitation with this design is that the width is limited by the equipment available to clean it out. Sediment distribution within a wide basin may not be uniform which may cause some problems in downstream control.

The design of sediment traps is based on slowing down the water as it moves through the trap thus allowing the bed load sediment to deposit on the bed. The slower the water moves the quicker the sediment will drop out thus

decreasing the length of the basin. The fall velocity of the individual sediment particle plus its forward motion determine the length.

4. Effects of Sediment Trap Location

The location of the sediment trap will have an affect on how the sediment trap will behave. The two typical locations are (1) located just downstream of headworks and (2) towards the middle reach of the canal where the slope can no longer be increased. The headend location would mean that the sediment trap would be located in a reach of canal that would be designed to operate with the same transport capacity as the last reach (say 145 ppm citing the above example). Therefore, even before the downstream end of the stilling basin was completely filled up sediment deposits would begin to occur above the design bed level in the front end because the incoming concentration continues to be 180 ppm. Deposition would still occur in the sediment trap and just downstream of it where the water depth causes a velocity reduction. Further downstream the bed would still continue to erode until the 145 ppm capacity was reached. The system is not quite in balance and might require considerable monitoring to make the adjustments that would approximate equilibrium. The amount of desilting, timing and possibly location would have to be determined in the field.

When the sediment trap is located towards the middle of the canal a different condition exists. In this case, the upstream reach of the canal would have the capacity to carry the 180 ppm and it is only the downstream reaches that have the reduced capacity. Therefore, the sediment trap would be located at the end of the initial reach so that once it is filled it would carry the 180 ppm. Therefore, all of the excess bed material would deposit downstream of the stilling basin. In theory, the system would be balanced on a annual basis.

When sediment traps are located at the headend of a canal or system it is usually because there is insufficient slope to design a canal with a higher carrying capacity. A sediment basin could be designed to carry 180 ppm after it is filled but it would reduce the total head available for the design of the canal which reduces its carrying capacity; as an example the reduction might be from 145 ppm to 140 ppm. This in turn means that the amount of

sediment removed each year will increase and the sediment trap would have to be slightly larger. The design must be based on the most cost effective solution.

5. Effects of varying concentration

The day-to-day variation is sediment concentration is not known. Even at constant discharge, there are enough data to indicate that the rate changes with time. The rate of change is unknown. The reason for the daily (rate of change with time) variation is not known although part of it is related to change in the sediment inflow rate at the controlling barrage. Variations would also be due to changes in the upstream and configurations as well as the three dimensional affects of velocity. The design of the canal and monitoring are usually based on a one dimensional approach.

The variability of the incoming bed material sediment load will have an effect on the deposition pattern in the sediment trap, the annual amount of sediment entering the system and the processes and conditions affecting the erosion-sedimentation process downstream of the trap.

6. Monitoring Sediment Balance

The design values are only estimates and what occurs in the field will differ, not only in total volume but also from year to year. Since the system, in the example cited, will transport about 80% of the bed load, the desilting of more material than is necessary is an extra cost. Removal of too much sediment may tend to cause the canal to scour downstream and may be drop out further on towards the tail. Since desilting is costly, operating rules should be devised to minimize this cost. The following describes some of the items that must be considered in setting up the sediment monitoring program and establishing the rules for operating and desilting:

(1) Annual sediment volumes will vary from year to year and sediment rates will vary from month to month depending on upstream conditions.

146

(2) The long term sediment transport capacity of the system must be determined as the designers estimate is an average value based on several assumptions.

(3) Excessive desilting may cause canal erosion to take place downstream if insufficient sediment is not available over the entire year to balance the canals transport capacity.

(4) The canal bed may degrade and/or aggregate periodically as the sediment load varies. The annual change, if any, is what must be controlled.

(5) The flow in the canal cannot be disrupted for desilting other than in the closure period; except possibly for a few days during rabi harvest or during rainy periods when the demand may be less.

(6) There are no experience factors to draw on.

The sediment management program is composed of two parts:

* Operation of the sediment trap.
* Monitoring sediment conditions or balance along the length of the canal.

A sediment monitoring program would be based primarily on observ'ng/ measuring conditions at various points along the profile of the canal. By knowing what is occurring on the canal bed, changes can be made in operation of the sediment trap. The effect of these changes are then observed. This monitoring would be a more or less continuous program.

The sediment monitoring program is implemented in two stages:

* Startup - shakedown program.
* Operational program.

147

The startup or shakedown program would be implemented initially to determine what actually happens on the canal bed and how the system must be operated. It requires a large number of cross-section observations be made initially at short intervals. As the operating rules are developed and conditions in the canal tend to stabilize, both the number of observations and locations may be decreased.

Once the operating rules are established and fully evaluated, the operational monitoring program is implemented. This program would require periodic observations to be made only at those locations which are needed to monitor conditions. All other observation points used in the shakedown period could be eliminated. Both the location and the time between observations would be determined during the final phase of the shakedown period to allow a final evaluation of the proposed operational program.

The startup period would be flexible enough to allow more observation points to be added as well as additional measurements if conditions warrant. The first canal to receive and operate with a sediment trap will probably require a more extensive program than those installed later on. Experience factors should be applicable elsewhere.

The design of a canal for rehabilitation requires a cross-section be prepared every 500 feet or 0.5 RD. Figure III-4 provides the cross-section survey requirements. Figure III-5 indicates the survey requirements for each outlet. The cross-sections are plotted and then the long-sections prepared. All structures are located on the long-sections with appropriate cross-sections. These are made part of the design and construction-contract drawings. Upon completion of the construction work and prior to operating the canal a second set of cross-sections are prepared for the same locations as the original ones made for design. These are the "As-built" sections and should be plotted on a set of construction drawings and marked "As-built". All future references for conditions concerning the canal prism would be made to the "As-built" sections.

A startup monitoring program would require all the original sections to be resurveyed for two consecutive years following the canals return to operation. Exhibit III-4 presents the monitoring form for entering data for analysis and evaluation. A complete evaluation of conditions is made following the second year of operation to redefine the monitoring program. The selected monitoring control points established for flows will be also used for sediment. In addition, those points that appear to have sediment or erosion problems determined during the startup period evaluation will be retained and added to the control points for continued observation. At the end of 5 years, the monitoring program should be re-evaluated and adjusted accordingly.

A monitoring program is used to determine how much sediment will deposit in the canal, where it will deposit and how long it will take before the performance standards will require desilting. The program would then indicate how much would have to be removed. This still holds true when a sediment trap is included in the system. In this situation, the annual analysis and evaluation of the data will indicate how the sediment trap is preforming and what adjustments in operating the canal should be made to improve its performance. The stilling basin, in simple traps, can either be lengthened or shortened to control the total volume removed.

Any desilting that must be done during the irrigation season to improve sediment distribution may require closure of the canal. Removal of saturated sediments by mechanical means is difficult. It would probably require a backhoe with a solid bucket. The water level would have to be reduced considerably and the operator would have to be sure to go deep enough to fill the bucket before lifting it up and out. Dragline buckets will not work. Clam shell buckets would require testing to determine performance. This tends to limit the size of canals that could be desilted during canal operations. The irrigation demands are usually lower during the harvest period so that cleaning could be scheduled by rotating flows or suspending inflows for a week to 10 days. Mechanical cleaning can be accomplished during rainy periods, particularly when the spoil is to be placed on the backslope of the embankment.

TABLE III-1

EXAMPLE EVALUATION MEASURED & SANCTIONED DISCHARGE

Location Outlets	Pipe Dia		Sanc. Dis.	Measured Discharge			Maximum Difference	
RD	Sanc. in	Meas. in	Q cfs	Q1 cfs	Q2 cfs	Q3 cfs	Cfs	%
80755/L	6	6	1.08	1.26	1.45	1.44	0.37	34.26
80850/L	12	12	4.61	4.67	6.69	6.12	2.08	45.12
81470/L	4	4	0.20	0.40	0.19	0.55	0.35	175.00
83020/L	3	3	0.27	0.46	0.52	0.51	0.25	92.59
83600/L	3	3	0.12	0.49	0.31	Closed	0.37	308.33
83800/L	4	6	0.98	1.16	1.38	1.38	0.40	40.82
84650/L	6	6	2.13	1.38	2.06	1.75	-0.07	-3.29
85340/L	6	6	1.30	1.90	3.16	3.16	1.86	143.08
85632/L	7	9	2.52	3.20	3.90	3.66	1.38	54.76
86500/L	6	9	0.92	2.00	3.48	0.54	2.56	278.26
89480/L	5	6	1.47	2.25	2.40	2.41	0.94	63.95
91080/L	4	4	0.47	0.71	0.89	0.85	0.42	89.36
91504/L	4	4	0.18	0.34	0.45	0.41	0.27	150.00
93100/L	5	6	0.96	1.27	1.71	1.62	0.75	78.13
93500/L	9	12	3.41	4.68	4.40	4.41	1.27	37.24
94460/L	9	9	1.71	2.60	2.70	2.65	0.99	57.89
95630/L	12	12	6.02	10.17	10.43	10.62	4.60	76.41
97003/L	4	6	0.53	0.95	1.10	1.17	0.64	120.75
100000/L	4	6	0.74	2.25	2.38	2.46	1.72	232.43
100330/L	4	4	0.41	0.79	0.83	0.86	0.45	109.76
102000/L	4	4	0.85	1.08	1.17	1.19	0.34	40.00

TABLE III-2

EXAMPLE CALIBRATION OF APM OUTLETS ALONG A CANAL REACH

R.D.	Type Outlet	Authorized Discharg			Measured Discharge 2/				Calibration						
		A.Q. Cfs	Bt/D ft	Y ft	ha ft	hb ft	S %	Q cfs	Bt D	Y	Type Flow /3	ha ft	hd ft	Cd ft	Q cfs
311740/L	O.F.	0.87	-	-	1.21	1.20	0.92	1.5	0.29	-	Free	2.37	-	0.32	1.30
313619/L	APM	0.60	0.20	1.32	Current Meter			12.0	0.92	-	Free	3.00	-	2.15	0.89
313976/L	APM	0.61	0.20	0.25	0.44	0.39	0.88	0.55	0.25	0.75	Free	1.22	-	0.44	0.55
313772/R	APM	1.79	0.20	2.17	0.51	0.49	0.96	0.60	0.20	0.83	Free	3.72	-	0.29	0.60
4448/R	APM	0.61	0.20	0.25	0.48	0.36	0.74	0.70	0.22	0.60	Free	1.20	-	0.68	0.70
4456/L	APM	0.42	0.20	0.20	0.29	0.16	0.57	0.31	0.23	0.29	Sub	1.25	0.12	0.54	0.31
7756/L	APM	0.40	0.20	0.20	0.60	0.28	0.46	1.16	0.20	0.80	Free	1.71	-	0.74	1.16
7282/L	APM	1.04	0.20	0.44	0.68	0.32	0.47	1.46	0.20	0.80	Free	2.30	-	0.82	1.46
8274/R	APM	0.46	0.20	0.20	0.42	0.36	0.86	0.50	0.20	0.20	Free	1.55	-	1.20	0.50
11662/L	APM	0.72	0.20	0.32	0.76	0.35	0.47	1.79	0.54	0.91	Free	2.30	-	0.90	1.79
13589/L	APM	0.86	0.20	0.41	0.54	0.39	0.73	0.93	0.28	0.58	Free	1.41	-	0.61	
14314/R	PIPE	0.28	0.21	-	0.27	0.18	0.66	0.26	0.21	-	Sub	1.39	-	0.93	
5545/L	PIPE	0.64	0.50	-	0.85	0.60	0.71	2.05	0.50	-	Free	2.75	-	0.79	
18016/L	APM	3.37	0.32	1.00	1.22	0.99	0.79	4.03	0.32	1.04	Free	3.80	-	0.78	
20464/R	PIPE	0.84	0.20	0.36	0.38	0.22	0.57	0.50	0.20	0.39	Sub		0.87	0.84	0.13
21400/L	PIPE	0.29	0.25	-	0.31	0.22	0.72	0.35	0.29	-	Sub		1.28	0.55	0.29
21725/L	APM	1.04	0.20	0.56	0.42	0.16	0.38	0.60	0.22	0.52	Free			0.63	0.64
23500/R	PIPE	0.07	0.17	-	0.17	0.10	0.12	0.12	0.17	-	Sub		0.88	0.73	0.70
23600	PIPE	0.49	0.33	-	0.22	0.12	0.54	0.18	0.33	-	Sub			0.47	0.18
25030/L	APM	1.34	0.20	0.62	0.39	0.17	0.44	0.52	0.20	-	Sub			0.78	0.53
26342/R	PIPE	0.19	0.29	-	0.18	0.11	0.61	0.13	0.29	-	Free		0.10	0.77	0.16
26352/L	PIPE	0.16	0.21	-	0.20	0.11	0.57	0.15	0.21	-	Sub		0.29	0.78	0.25

Note: 1. Calibration performed on Niaz Beg Distributary Canal, 11 to 16 March, 1987.
2. Water course discharge measured with cutthroat flumes
3. Free = free flow condition and sub = submerged flow

TABLE III - 3

DEFINITION OF TERMS USED IN SEDIMENT TRANSPORT

Sediment Discharge

Besides transporting water, canals will transport sediments. These sediments are usually named after the method or process by which they are transported or the origin of the sediments (see Figure III-1) and are defined as follows:

1. Bed Load

   Bed load consists of sediment particles sliding, rolling, or jumping over or near the canal bed (bottom), generally in the form of moving bed forms such as ripples or dunes.

2. Suspended Load

   Suspended load refers to bed particles in transport where the gravity forces is counter-balanced by upward forces due to the turbulence of the flowing water. This means the particles make smaller or larger jumps but return eventually to the canal bed. By that time, however, other particles from the bed will be in suspension.

3. Bed Material Load

   The strict division between bed load and suspended load is not possible; in fact, the mechanisms by which particles are moved in both are related. Therefore, the bed material load (bed load and suspended load together) is often calculated.

4. Wash Load

   Wash load consists of particles smaller than the bulk of the bed material. These particles are rarely found in the bed and are generally smaller than 0.050 mm (50 microns). The mass of these particles is too small to be a cted by gravitational forces while in motion so that they are carried ti ough the canals and are deposited in the farmers fields. The rate of wash load cannot be calculated; it is mainly determined by climatological characteristics and the erosion features of the whole catchment area. Wash load colors the water. Because there is no

interchange with bed particles in flowing water, wash load is not important for local scour or silting.

TABLE III - 4

EQUIPMENT REQUIREMENTS FOR CANAL CALIBRATION

Surveying Equipment

* Level with carrying case
* Tripod
* 2 level rods
* Chain and pins
* Poles
* Steel carpenters tapes, 6 ft, 25 ft and 100 ft
* Surveyor's notebook(s)
* Umbrella and tripod stand
* Paint and brush

Current Meter Equipment

* Price type current meter with carrying case
* Rating table
* Wading rod with meter support, base plate etc
* Tag line
* Cable, cable suspension, weight(s) hanger etc
* Boat, if necessary
* Field data collection forms
* Thermometer

Miscellaneous Field Equipment

* Portable flumes and weir
* Shovel
* Tamping bar
* Carpenters level, 2 ft
* Chalk
* Y rod
* Meter stick
* Data collection forms

EXAMPLE SEEPAGE LOSS DETERMINATION 1/

Station RD	Description	Canal Discharge Q-cfs	Change ΔQ cfs	Total Outlet Flow (cfs)	Seepage Loss (cfs)	Calculated Wetted Area 2/ (ft^2)	Seepage Loss Rate 2/ $ft^3/ft^2/day$	Seepage Loss Rate 2/ cfs x 10^{-6}	$P = 2.67(Q)^{0.5}$ ft^2/ft	Length ft	Seepage Loss Rate 3/ cfs x 10^{-6}
73300	U/S Conduit	205.68	1.13	000	1.13	93415.00	1.05	12.1	38.29	3200	9.2
77000	D/S Exit of Conduit	204.55	11.55	8.61	2.94	165771.00	1.53	17.7	38.19	6350	12.1
83350	Bench Flume	193.00	11.66	9.95	1.71	60601.00	2.44	28.2	37.09	2350	19.6
85700	Bara River Invested Syphon	181.34	26.91	26.57	0.34	354087.00	0.08	0.9	35.95	10500	0.9
96200	Kohat Road Invested Syphon	154.93	17.43	5.68	11.75	196954.00	5.15	59.6	33.23	6800	52.0
103000	Aquaduct	137.00									
			68.68	50.81	17.87					29200	

Note: 1. Calibration performed on Warsak Gravity Canal, NWFP 21 Feb. - 05 Mar. 1987. Utah State University Training Course.

2. Based on physical dimensions.

3. Based on Lacey's value of wetted perimeter P.

EXHIBIT III-1

EXHIBIT III-2

FLOW MONITORING
CONTROL POINTS

Canal: _____ Div. _____

Discharge: _____ Sub Division _____

_____ Date _____

Downstream W.S. elev. _____ Sub Engr _____

Control Points				Current Situation				
Reach RD No.	Structure Data			Dist. to W.S. (d) (in) (ft)	W.S. Elev	Stage ft	Est. Q cfs	Control Q cfs
	No.	Dir	RL					

W.S. - Water Surface

Q - Discharge

d - Distance from Reduced Level to Canal Water Surface.

LONG TERM FLOW MONITORING RECORD

Canal Name _____

Structure/Control point _____

Design dicharge _____

Calibrated Water Surface Level _____

Location (RD) _____

Reduced level _____

Division _____

Subdivision _____

Date of last Q Calibration _____

Date	Dist. to W.S. (d) (inch) (ft)	W.S. Elev. (ft)	Stage (ft)	Est. Q cfs	Control Q cfs

W.S. = Water Surface

Q = Discharge

d = Distance from Reduced Level to Canal Water Surface.

EMBANKMENT AND SEDIMENT MONITORING

Canal Name: _____ Division: _____

Design Discharge: _____ Sub Division: _____

Location RD _____

Structure/Name: _____

Average Sediment Concentration _____

Year	Ave. Max Q Cfs	Item	Point B (Ft)	Point C (Ft)			Point O (Ft)	Point P (Ft)
		Design Dist						
		Design Elev.						
		As built Dist.						
		As built Elev.						
		Meas. Dist						
		Meas. Elev.						
		Change Dist.						
		Change Elev.						

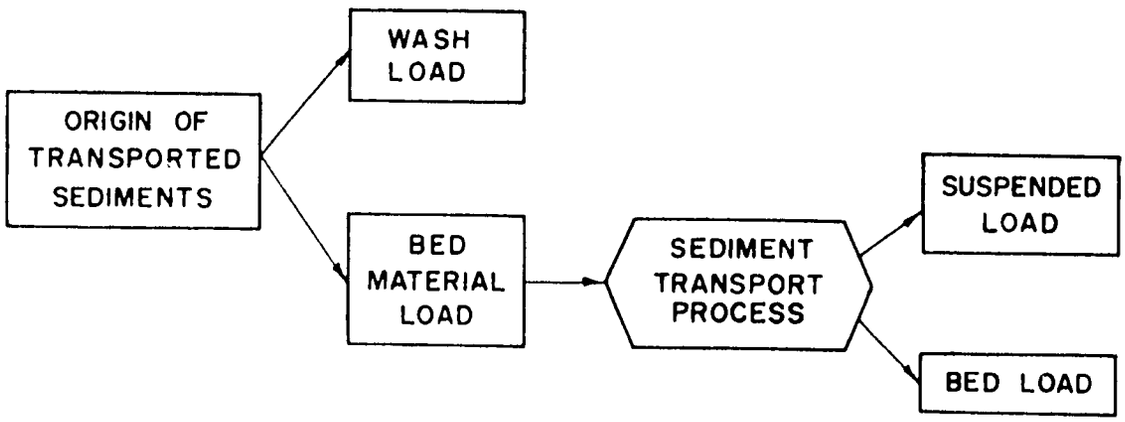

TERMINOLOGY IN SEDIMENT TRANSPORT

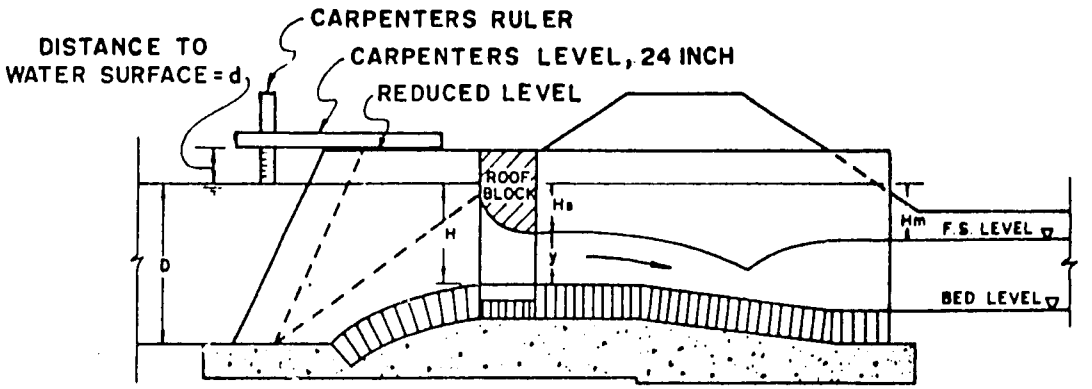

Note:

1. Reduced level set on outlet masonary cap.

2. Can substitute 6-foot steel tape for carpenters Rule.

MEASURING WATER SURFACE LEVEL AT CONTROL POINT

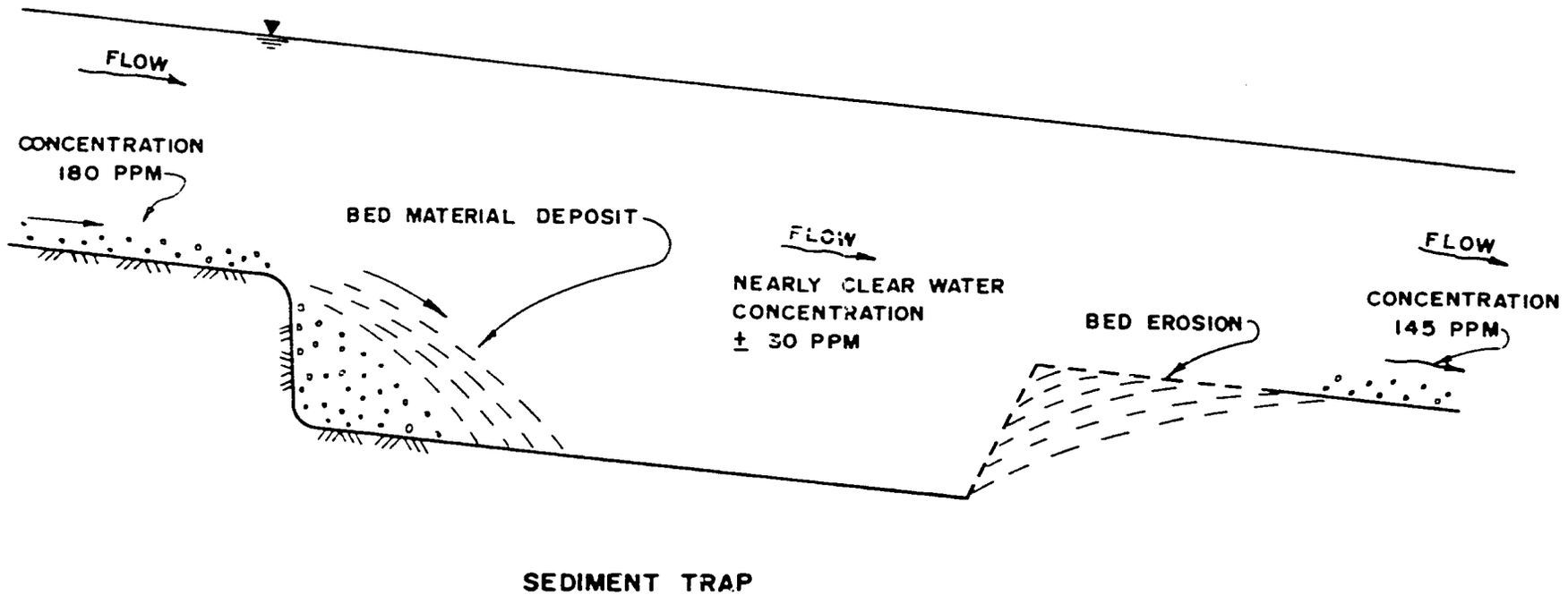

GENERALIZED PHASE OF SEDIMENT TRAP BEHAVIOR

FIGURE III-3

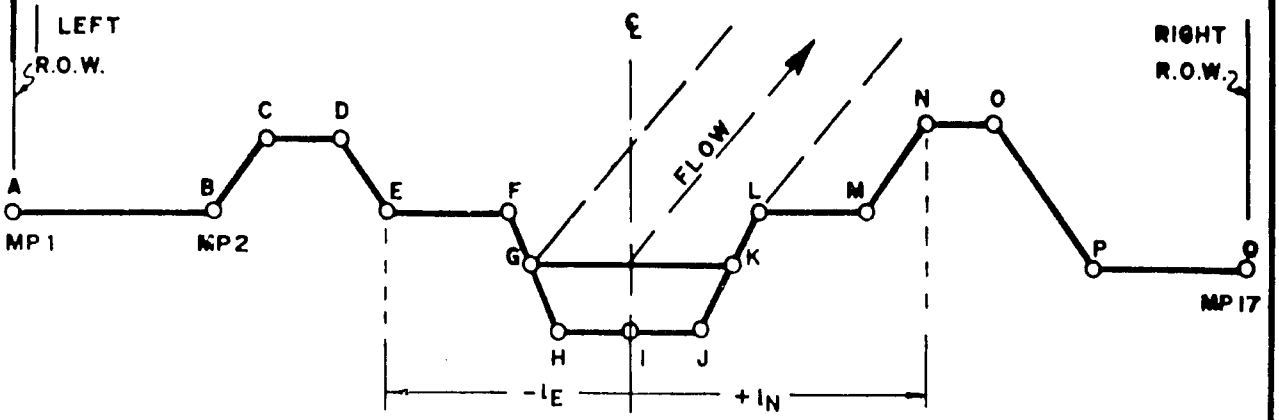

In each point A upto Q one number and two values are measured:

- measuring points in the cross-section, sequentially starting from point A
- level related to GTS
- distance to center line (negative or positive)
  points A - H negative
  points J - Q positive

The points A-Q are the minimum number points which must be measured in the cross-section. Additional points can be located between any two lettered points in order to define actual conditions.

In normal situations cross-sections will be measured every 500 ft, and at all structures.

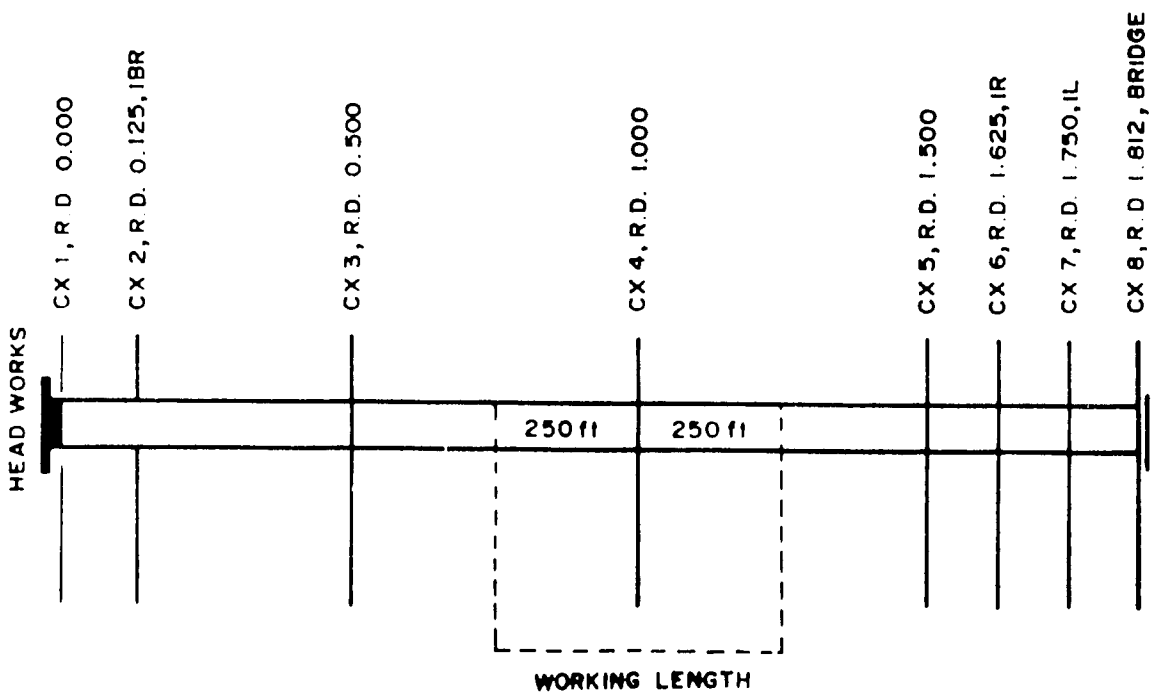

SURVEY REQUIREMENTS
CANAL MONITORING PROGAM

162

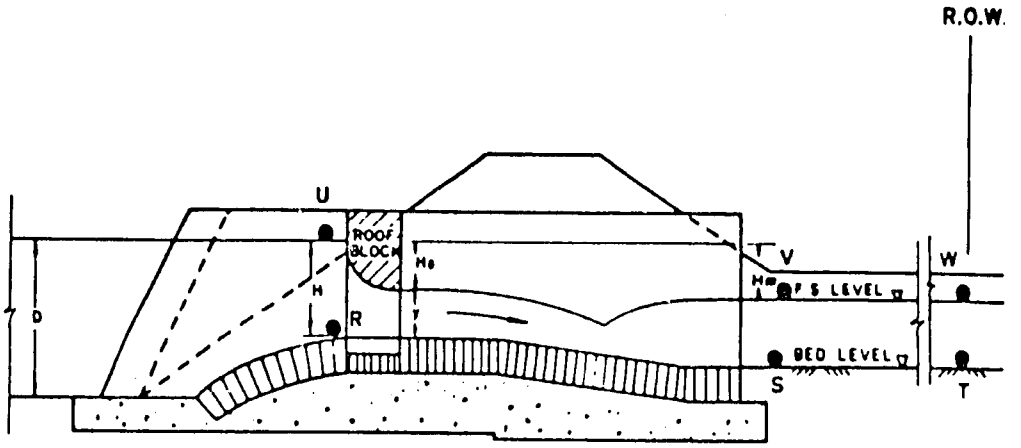

Notes:

1. Estimate water surface level when watercourse is dry; points U, V and W.

2. Define outlet number and delivery side.

3. Define width of outlet.

4. Give canal stationing.

SURVEY REQUIREMENTS
OUTLET MONITORING PROGAM

CHAPTER IV

STAGE MEASUREMENT

CHAPTER-IV
STAGE MEASUREMENT

Section 1 : Introduction

The state of a canal is the height of the water surface above an established plane. The water surface elevation (level) referred to some arbitrary or predetermined gauge datum is called the "gauge height". Gauge height is often used interchangeably with the more general term "stage", although gauge height is more appropriate when used to indicate a reading on a gauge. Gauge height is usually expressed in feet and hundreds of a foot, or in meters and hundredths or thousandths of a meter. Currently the PIDs are still using the English system of measurement, whereas the water course are being rehabilitated using the metric system.

Records of gauge height are used with the stage-discharge relation in computing the canal discharge. The reliability of the discharge record is therefore dependent on the reliability of the gauge height record a well as on the accuracy of the stage-discharge relation.

Water levels can also be use to indicate how the canal is operating without being calibrated to discharge. In this instance, it is the change in water levels at given locations along a canal that is important, assuming the discharge remains constant. This is the method used to control and monitor flows in a distributary canal and the flows into the individual water courses that serve the farmers.

A record of stage (or water levels) may be obtained by systematic observations of a non-recording gauge or by means of an automatic water-stage recorder. Recording gauges are not used within the irrigation canal systems in Pakistan. Their use is limited to recording canal inflows at specified barrages. Non-recording gauges are used because of the low installation cost. The need for an observer is satisfied by the need for a operator/ gauge tender at most gauging sites. The major problem associated

165

with non-recording gauges is the lack of accuracy in reading and/or recording the gauge height and maintaining the gauge in readable condition.

Section 2: Datum of Gauge

Although the datum of the gauge may be a recognized datum such as mean sea level, an arbitrary datum plane is normally chosen for the convenience of using low numbers for gauge heights. To eliminate the possibility of negative values for gauge height, the datum is usually set at the elevation of zero flow where an artificial control is used. For natural control, the elevation of the datum is set below the elevation of zero flow, thus avoiding the potential problem of scour.

As a general rule a permanent datum should be maintained so that only one datum for the gauge height is used for the life of the measuring station. In an irrigation system, there is seldom any reason to change the datum since the station is not relocated. When datum changes are made for whatever reason, the record of the change should be made a part of the written station description and history.

In any event, when a station is established, it should be assumed that a permanent datum will be maintained at the site. To maintain a permanent datum at each gauging station requires at least two reference marks; that is, permanent points of known gauge height elevation. One point should be the permanent bench mark established at each control structure, the second may be a point that would not be destroyed through normal operations.

Section 3: Vertical Staff Gauge

The record of stage is normally obtained in Pakistan by reading vertical staff gauges. In most installations, two gauges are required due to the probability of submerged flow conditions. Direct reading staff gauges are usually inclined so that they can be mounted on the banks of small lined canals or water courses. They could be adopted for use in Pakistan and are discussed further in Section IV.5.

Generally discharges should be read twice a day by a gauge reader (observer). Additional readings are made each time the headworks or cross regulators are adjusted or as directed. The gauge reader must systematically record and report his readings.

On each routine visit to a gauging or water measurement station, the sub-engineer also visits the gauge reader and inspects the record book to check for discrepancies in the observer's readings. The sub-engineer should also observe the staff gauge(s) and make a reading during the visit to assure himself that the latest entries by the observer were correct. The SBE should also check the operating log for correct entries. Such visits are important; if they are not made, the gauge reader tends to feel that no one pays any attention to his work, and he may become less conscientious about his gauge readings.

A. Staff Gauge Material and Dimensions

Vertical staff gauges can be mounted directly on control structure walls or in stilling wells associated with larger structures. Standard permanent staff gauges often consist of porcelain-enameled iron or steel sections. Two such standard sizes are 2.5 inches (0.025 m) wise, 3.0 feet (0.915 m) long and graduated every 0.01 foot (0.0033 m); and 4 inches (0.1 m) wide, 3.4 feet (1.04 m) long, and graduated every 0.02 foot (0.0067 m). The background is white and the numbers are in black. Pakistan does not appear to have a standard manufactured staff gauge as a variety of gauges, materials, and configurations have been observed in the field.

The placement of staff gauges on vertical steel channels, iron or wooden posts should be avoided because they collect weeds and the water levels can not be read.

B. Gauge Zero Setting

The accurate determination of the sill-referenced head, h_1 is the most important factor in obtaining accurate discharge measurements. Stilling wells, which dampen wave action, are recommended to facilitate gauge reading to the nearest hundredths of a foot, particularly on large canals.

167

With smaller weirs, the stilling well is often of a small diameter, 10 to 12 inches, which makes reading of a staff gauge difficult. Dip sticks are often used to measure the distance from the top of the stilling well to the water surface. In this case, a datum is set at the lip of the well with precise reference to the weir crest. The dip stick is calibrated such that when it is fully lowered to match the stilling well lip elevation the bottom would be at weir crest elevation or the gauge zero setting. The dip stick can be calibrated to read the h_1 depth directly. The alternative is to set the rating table to be used directly with the distance from the lip to the water surface. The latter would allow a carpenter's tape to be used in lieu of a calibrated dip stick.

The zero setting for orifices is made equal to the sill level or invert of the opening. Orifices should always be operated with the upstream water surface elevation a minimum of one vertical diameter/distance above the top of the opening.

The zero setting for gates, a special condition for orifice flows is always set at the invert of the opening; i.e, the gate sill. This requirement is that under certain flow conditions the gate structure may be operated as a weir and not as an orifice. The zero setting would be set on the floor of the structure but under this condition the height of the gate sill above the floor must be accounted for.

The zero setting should be checked annually along with crest measurements and orifice and gate sill elevations to be sure that there has been no change in the relationships.

Section 4: Placement of Staff Gauge

For either lined or unlined canals a vertical support for the staff gauge is most suitable. It can be mounted on the upstream transition section side wall where it can be read. Where a stilling well has been installed the staff gauge would be mounted on the wall where it can be easily read. The staff gauge does not have to be set with the zero point of the gate set to the

weir crest or datum, but it is highly recommended because it facilitates the reading and eliminates the possibility of subtraction errors. When the zero point is not set at the weir or datum crest elevation, the actual zero reading must be subtracted from the observed gauge reading before entering the rating table. The subtraction process introduces the potential for error, although the water measurement record sheet can be prepared with gauge zero reading printed on it.

The gauge can be mounted to the wall with lead or plastic anchors or other suitable concrete masonry anchor bolting systems. Wood plugs placed in drilled holes are not usually durable an should be avoided. Slotted holes in the gauge can be used to adjust the gauge to the proper final elevation, or the holes can be carefully sured and field drilled to match the anchor locations, which usually drift slightly from their intended locations. Always check the gauge after it has been fastened to assure that it has not slipped. A second gauge point in addition to the gauge zero should also be checked. This will likely disclose any gross error in arithmetic in placing the gauge. An error in the zero reading of more than 1/8 inch on most flumes would be cause for concern and should be checked carefully.

The following procedure is used to correctly locate and mount the staff gauge on a masonry canal wall:

(1) Determine the location on the gauging section by use of Figure IV-1 or appropriate weir plan and mark this section on the canal wall.

(2) With surveyor's level, take a backsight on the sill crest at the control section (first position) to get the sill-reference level. All rod readings are to ±1 mm (0.003 foot) or even more precise (see Figure IV-2.)

(3) Mark the head wall for the crest elevation which corresponds to the staff gauge zero.

(4) Recheck the crest elevation to determine average crest elevation. Any significant slope to either side, front of back or non-horizontal shape will require current meter calibration to verify discharge coefficients.

(5) Mark the gauge holes or slots and the gauge top and bottom on the appropriate wall. Drill the holes, secure the anchors, and tentatively attach the gauge to the wall.

(6) Check the rod reading at the gauge zero point, adjust gauge to correct location, and fasten securely.

The same procedure can be used for inclined staff gauges. Other methods such as ponding can be used when surveying equipments not available.

Staff gauges will require replacement occasionally due to rust and corrosion. The procedure is the same as described above.

D. Reading Staff Gauge

Figure IV-3 presents the detail for reading a staff gauge. The numbering starts at the zero setting and continues upward in one foot increments. Stilling wells serve the purpose of damping the small changes in water surface elevations as water flows through a weir or other structure. This should allow reading to 0.01 foot. The accuracy will depend on he readers ability to average the "bounce" of the water level, i.e., the average between maximum and minimum observations.

Staff gauges mounted in open channel flow are more difficult to read due to the water's velocity and more bounce on the gauge. Under these circumstances accuracy may be limited to 0.02 foot or even 0.10 foot. At larger structures it should be common practice to use an upstream wall mounted gauge as a check on the one in the stilling well.

170

E. Recording Stage Readings

The staff gauge readings, assuming both an upstream and downstream gauge, must be recorded immediately. Exhibit IV-1 is an example of a form that only staff gauge reading(s) are recorded on. Its use is appropriate at all structures and conditions. Under certain operating criteria, the tailwater elevation (level) would be important in defining what conditions will be at the outlet structures located along the canal. As explained in Chapter-II, the operation, hence the equitable distribution of water, is controlled by observing and measuring the water levels at each outlet.

For system operation the Executive Engineer and the Sub-Division Officer both need to know what the exact flow (discharge) into each main, branch, distributary and minor canal is. With this data available, the Executive Engineer can be assured that each distributary is receiving it allocated amount. Therefore, it is convenient to have the stage-discharge relation available at each measuring (distribution point) so that the gauge reader can convert his stage reading(s) to discharge immediately.

Exhibit IV-2 is an example of a form designed to record both the stage reading(s) and the flow. The recorded data should be retained at the gauge station as part of the station record. The gauge reader can use a small form as shown in Exhibit IV-3 to forward the information to the Sub-Division Officer and/or the Executive Engineers as directed. It is the station record that the Sub-engineer and other inspecting officers should check when visiting the site.

F. Calibration Check

The zero setting and crest elevations should be surveyed and checked each year. This should be done in conjunction with the structural inspection, as part of the annual maintenance program.

All measuring structures should also have a current meter calibration check made annually to ascertain that there has been no change in the stage-discharge relation. Where sedimentation appears to be a problem, current meter checks must be made more often to assure an accurate stage-discharge

relation continues. When sedimentation indicates a change, the structure or site must be re-rated and a new, accurate, discharge table prepared.

Section 5: Inclined Staff Gauges

Inclined staff gauges are used for three general reasons:

- Increase accuracy of measuring small changes in head
- Direct flow readings
- Where vertical walls are not available

An inclined staff is sometimes used on a vertical wall to allow the 0.01 foot reading to be more accurately read. The problem is that the associated stilling well becomes large and costly.

The normal use of inclined staff gauges is on lined concrete channels where a vertical post would cause problems with weed collection and reading. The inclined staff gauge can be used with a broad crested weir constructed in the bottom of the ditch. In most cases two gauges would be required; one upstream and one downstream. Where free flow is always present, the staff gauge can be calibrated to read flow directly. An example of this is shown on Figure IV-4. In alluvial canals or ditches where channel control could change with sedimentation direct reading staff gauges are not recommended. The inclined staff is read using the same techniques as any other staff gauge.

178

TABLE IV-1

SAMPLE RATING TABLE

Gage height, feet	Discharge, second-feet	Difference, second-feet	Gage height, feet	Discharge, second-feet	Difference second-feet
0.0	0.0		2.0	54.5	
		0.2			5.6
.1	.2		2.1	60.1	
		.5			5.9
.2	.7		2.2	56.0	
		.8			6.2
.3	1.5		2.3	72.2	
		1.1			6.5
.4	2.6		2.4	78.7	
		1.4			6.8
.5	4.0		2.5	85.5	
		1.7			7.0
.6	5.7		2.6	92.5	
		1.9			7.2
.7	7.6		2.7	99.7	
		2.1			7.3
.8	9.7		2.8	107	
		2.3			8
.9	12.0		2.9	115	
		2.5			8
1.0	14.5		3.0	123	
		2.7			8
1.1	17.2		3.1	131	
		3.0			8
1.2	20.2		3.2	139	
		3.3			8
1.3	23.5		3.3	148	
		3.5			9
1.4	27.0		3.4	157	
		3.8			9
1.5	30.8		3.5	166	
		4.1			9
1.6	34.9		3.6	178	
		4.4			9
1.7	39.3		3.7	184	
		4.7			9
1.8	44.0		3.8	193	
		5.1			9
1.9	49.1		3.9	202	
		5.4			

TABLE IV- 2

SUBMERGED WEIR CORRECTION FACTOR

Value of "n"

H_d/H_u	0.0	0.1	0.2	0.03	0.04	0.05	0.06	0.07	0.08	0.09
0.0	1.000	1.004	1.006	1.006	1.007	1.007	1.007	1.006	1.006	1.005
.1	1.005	1.003	1.002	1.000	.998	.996	.994	.992	.989	.987
.2	.985	.982	.980	.977	.975	.972	.970	.967	.964	.961
.3	.959	.956	.953	.950	.947	.944	.941	.938	.935	.932
.4	.929	.926	.922	.919	.915	.912	.908	.904	.900	.896
.5	.892	.888	.884	.880	.875	.871	.866	.861	.856	.851
.6	.846	.841	.836	.830	.824	.818	.813	.806	.800	.794
.7	.787	.780	.773	.766	.758	.750	.742	.732	.723	.714
.8	.703	.692	.681	.669	.656	.644	.631	.618	.604	.590
.9	.574	.557	.539	.520	.498	.471	.441	.402	.352	.275

Sourse: USBR Design of Small Canal Structure, 1983 reprint.

EXHIBIT IV-1

WEEKLY OPERATIONS OF GAUGE HEIGHT

Canal: _____

Location: R _____

Structure: _____

Sub-division: _____

Division: _____

Circle: _____

Week From: _____

To: _____

Gauge Reader: _____

Name: _____

Signature _____

Gauge Height for Week Ending Thursday: _____

Day & Date	Time	Gauge Height		Remarks
		Upstream	Downstream	
Fri.	A.M. P.M.			
Sat.	A.M. P.M.			
Sun	A.M. P.M.			
Mon	A.M. P.M.			
Tues	A.M. P.M.			
Wed	A.M. P.M.			
Thurs	A.M. P.M.			

EXHIBIT IV-2

RECORD OF DAILY DISCHARGES

Division: _____ Flow Point No: _____

Sub Division: _____ Location: _____

Date	Reading (as found)				Reading (as left)				Remarks
	H_u(ft)	H_d(ft)	Q-(cfs)	Time	H_u(ft)	H_d(ft)	Q-(cfs)	Time	
1									
2									
3									
4									
5									
6									
7									
8									
9									
10									
11									
12									
13									
14									
15									
16									
17									
18									
19									
20									
21									
22									
23									
24									
25									
26									
27									
28									
29									
30									
31									

Note: 1. Only H_u , Q and Time should be recorded unless tail water registers as value for h_d.

2. Indicate under remarks column, any unauthorized adjustments of gate and illegal checking.

Prepared by: Checked and Submitted by:

_____ _____

Guage Reader Sub-Engineer

EXHIBIT IV-3

OBSERVATION OF DISCHARGE

Canal _____

Structure _____

Sub-division _____

Date _____

Time _____

Gauge Reducer _____

Name offtake	ft	hd	Q-cfs
1.			
2.			
3.			
4.			
5.			
6.			
Remarks			

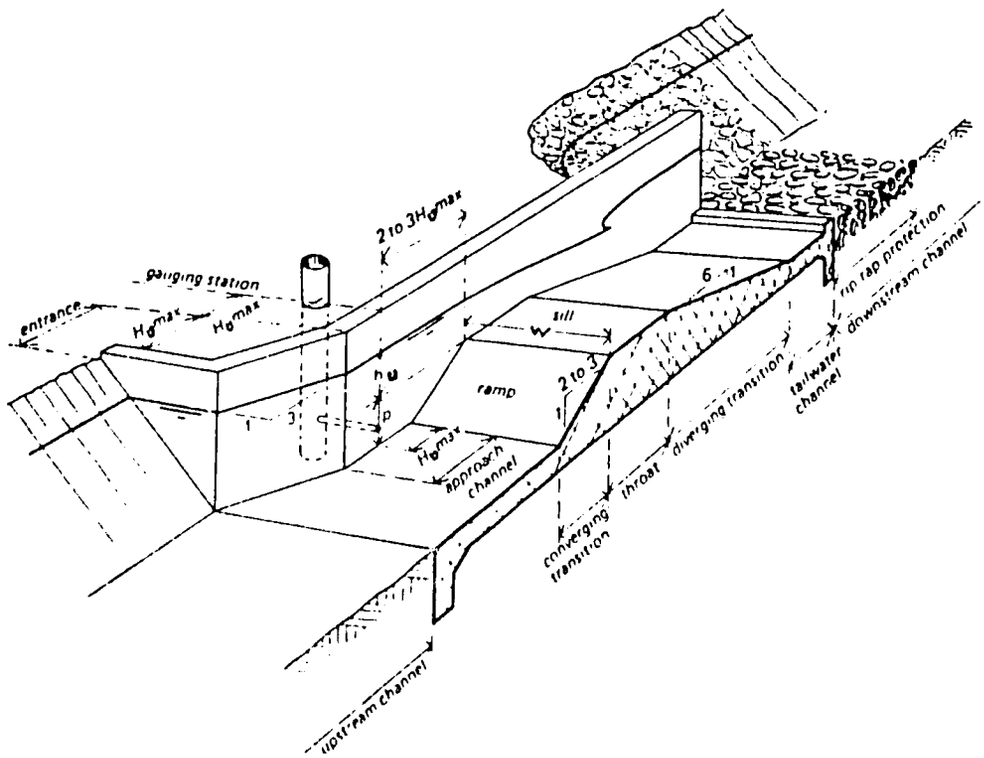

TYPICAL INSTALLATION DIAGRAM

BROADCRESTED WEIR

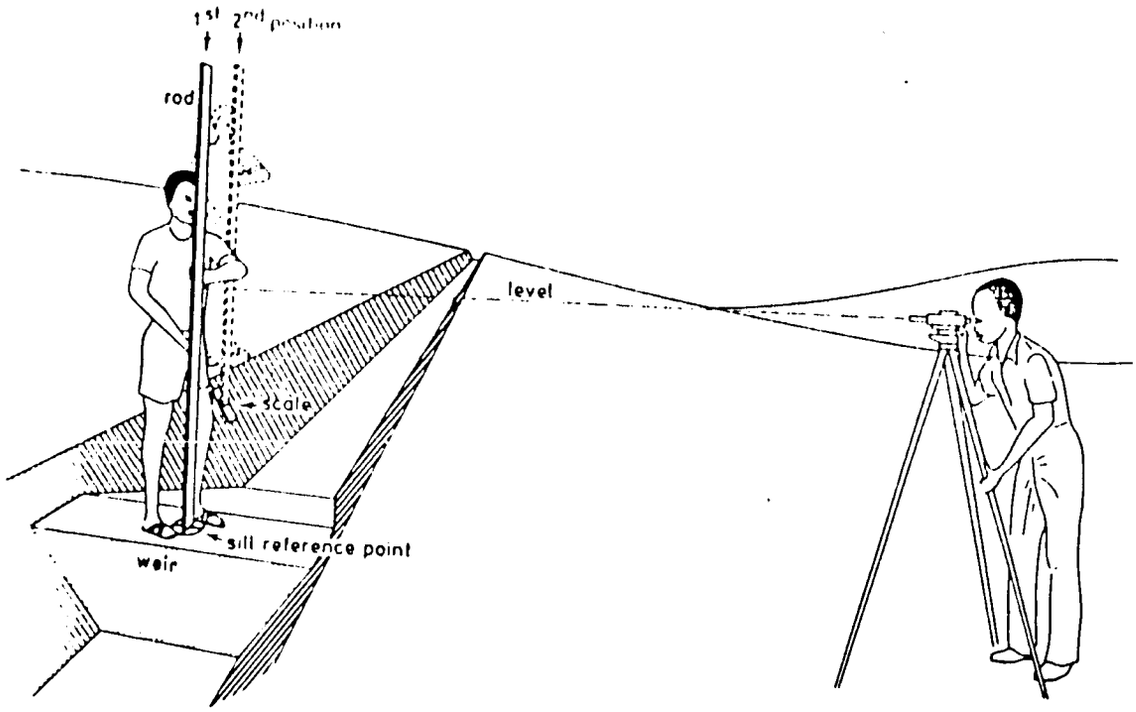

SETTING OF A STAFF GAUGE
ON LINED CANAL SIDE SLOPE

The standard gauge used in Pakistan looks similar to the example at the right. Each horizontal line is 0.10 (one tenth of a foot) from the next.

The numbering starts at a reference point (usually the crest level of that particular weir and continues upward in 1 (one) foot increments. Below are some examples of readings from one of these gauges.

If the water level is at:	it is read as
A	2.00'
B	2.30'
C	2.45'
D	2.90'
E	3.50'

If the water level is "bouncing" take an average between the high bounce and the low bounce. That will be considered a good mean (average) reading. For instance:

If the water is "bouncing"	the mean is
A - B	2.15'
A - D	2.45'
B - D	2.60'
B - E	2.90'

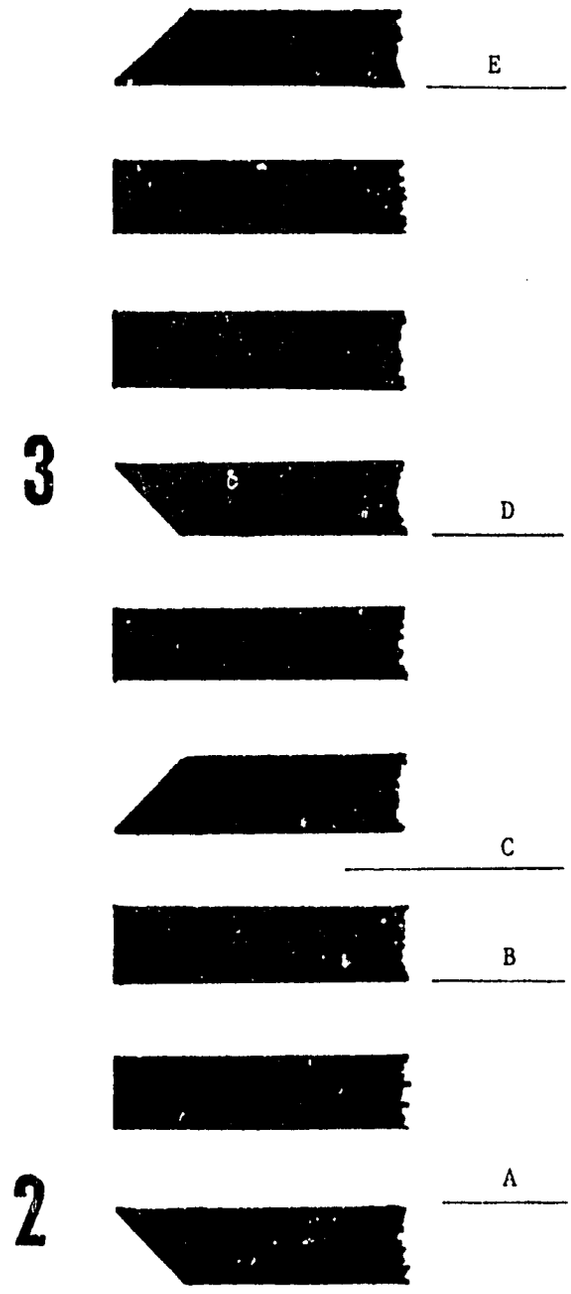

READING A STAFF GAUGE

A typical direct reading gauge used with broad-crested weirs looks similar to the example at the right. The numbers represent the flow in cubic feet per second passing over that particular broad-crested weir.

There are different size gauges for different size weirs, but they all represent units in cubic feet per second.

If the water level is "bouncing" take an average between the high bounce and the low bounce. That is considered a good average (mean) reading. For instance, if the water were bouncing between the numbers 200 and 300, it would be read as 250 cfs.

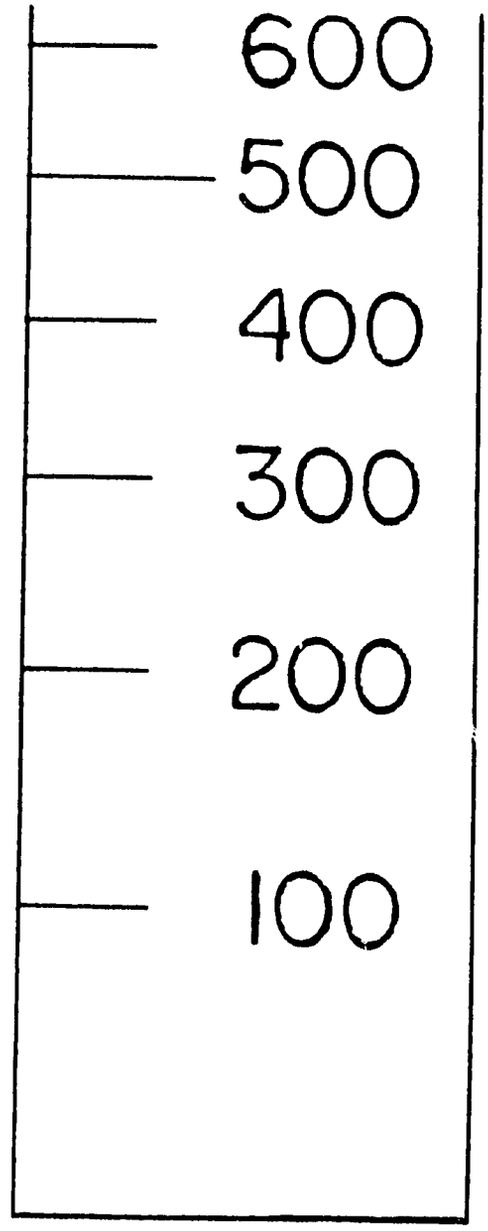

DIRECT FLOW READING
STAFF GAUGE

CHAPTER V

CURRENT-METER MEASUREMENT

CHAPTER V
CURRENT-METER MEASUREMENT

Section 1: Introduction

Canal flow, or discharge, is defined as the volume rate of flow of water, including any substances suspended or dissolved in the water. Discharge is usually expressed in cubic feet per second or cubic meters per second.

Discharge measurements are made at each of 25 to 30 measurement points across the canal to determine the discharge rating for the site. The discharge rating may be a simple relation between stage and discharge or a more complex relation in which discharge is a function of stage, slope, rate of change of stage, or other factors. Initially the discharge measurements are made with the frequency necessary to define the station rating over the full range of stage. Measurements are then made at periodic intervals, usually annually, to verify the rating or to define any changes in the rating caused by changes in channel conditions.

The conventional current-meter method is most commonly used in gauging canals. When using this method, observations of width, depth, and velocity are taken at intervals in a cross-section of the stream, while the hydrographer is wading or supported by a cableway, bridge, or boat. A current meter is used to measure velocity. This chapter describes the conventional current-meter method.

Section 2: General Description

A current-meter measurement is the summation of the products of the subsection areas of the stream cross-section and their respective average velocities. The formula

$$Q = \sum (a\ v) \qquad (5.1)$$

represents he computation, where Q is total discharge, a is an individual subsection area, and v is the corresponding mean velocity of the flow normal to the subsection.

In the midsection method of computing a current-meter measurement, it is assumed that the velocity sample at each vertical represents the mean velocity in a rectangular subsection. The subsection area extends laterally from half the distance from the preceding observation vertical to half the distance to the next, and vertically from the water surface to the sounded depth.

The cross-section is defined by depths at verticals, 1, 2, 3, 4....n. At each vertical the velocities are sampled by current meter to obtain the mean velocity for each subsection. The subsection discharge is then computed for any subsection at vertical x by use of the equation,

$$q_x = v_x \left[\frac{(b_x - b_{(x-1)})}{2} + \frac{(b_{(x+1)} - b_x)}{2} \right] d_x$$

$$= v_z \left[\frac{b_{(x+1)} - b_{(x-1)}}{2} \right] d_x \qquad (5.2)$$

where

q_x = discharge through subsection x,

v_x = mean velocity at vertical x,

b_x = distance from initial point to vertical x,

$b_{(x-1)}$ = distance from initial point to preceding vertical,

$b_{(x+1)}$ = distance from initial point to next vertical, and

d_x = depth of water at vertical x.

Thus, for example, the discharge through subsection 4 (heavily outlined in Figure V-1) is

$$q_4 = v_4 \left[\frac{b_5 - b_3}{2} \right] d_4$$

The procedure is similar when x is at an end section. The "preceding vertical" at the beginning of the cross-section is considered coincident with vertical 1; the "next vertical" at the end of the cross-section is considered coincident with vertical n. Thus,

$$q_1 = v_1 \left[\frac{b_2 - b_1}{2}\right] d_1$$

and

$$q_n = v_n \left[\frac{b_n - b_{(n-1)}}{2}\right] d_n$$

For the example shown in Figure V-1, q_1 is zero because the depth at observation point 1 is zero. However, when the cross-section boundary is a vertical line at the edge of the water as at vertical n, the depth is not zero and velocity at the end vertical may or may not be zero. The formula for q_1 or q_n is used whenever there is water only on one side of an observation vertical such as at piers or abutments. It is necessary to estimate the velocity at an end vertical, usually as some percentage of the adjacent vertical, because it is impossible to measure the velocity accurately with the current meter close to a boundary. There is also the possibility of damage to the equipment if the flow is turbulent. Laboratory data suggest that the mean vertical velocity in the vicinity of a smooth sidewall of a rectangular channel can be related to the mean vertical velocity at a distance from the wall equal to the depth. The tabulation below gives values that define the relation.

Distance from wall, as a ratio of the depth	Mean vertical velocity, as related to V_w
0.00	$0.65V_w$
.25	$.90V_w$
.50	$.95V_w$
1.00	$1.00V_w$

Note - V_w is the mean velocity at a distance from the vertical wall equal to the depth.

The summation of the discharges for all the subsections, usually 25 to 30 in number, is the total discharge of the canal.

Section 3: Classification of Current Meter Measurements

Current meter discharge measurements are usually classified according to the means used to cross the canal during measurement, such as:

* wading measurement
* cableway measurement
* bridge measurement
* boat measurement

The supporting equipment necessary to use one of the above methods obviously varies with the method. In shallow canals, up to about 4 feet in depth, wading is often used because it requires the least amount of equipment and is easily transported. It is the recommended method for distribution and minor canals. For larger canals, the boat is usually used, again because the investment in equipment is less and it is readily portable. Bridges are seldom located where measurements are desired. In addition, flow conditions downstream of a bridge are not always uniform as there is often considerable turbulence which could distort the measurement. In general, cableways are expensive because of the initial investment, but over a long period of time they might be economical.

Section 4: Procedures for Current Meter Measurements

A. General Procedure

The first step is making a conventional current-meter measurement of discharge is to select a measurement cross-section with the following desireable qualities:

* Cross-section lies within a straight reach and stream lines are parallel to each other.
* Velocities are greater than 0.5 ft/s (0.15 m/s) and depths are greater than 0.5 ft (0.15 m).
* Canal bed is relatively uniform and free of obstructions and heavy aquatic growth.

* Flow is relatively uniform and free of eddies, slack water, and excessive turbulence.
* Measurement section is relatively close to the water measurement station/structure to be calibrated.

The hydrographer must exercise judgement in selection of the site and the means of measurement.

After the measurement cross-section has been selected, the width of the canal is determined. A tag line or measuring tape is strung across the cross-section perpendicular to the direction of flow to avoid horizontal angles in the cross-section.

Next the spacing of the observation verticals is determined. Initially, 25 to 30 subsections are selected. The verticals should be so spaced that no subsection has more than 10 percent of the total discharge. The ideal measurement is one in which no subsection has more than 5 percent of the total discharge. It is not recommended that all observation verticals be spaced equally unless the discharge is distributed evenly across the canal. The spacing between verticals should be closer in those parts of the cross-section that have greater depths and velocities. If previous discharge measurements at the site have shown uniformity of both the cross-section and velocity distribution fewer verticals may be used. Also on smaller canals fewer verticals are required to meet the 10% requirement.

After the stationing of the observation verticals has been determined, the appropriate equipment for the current-meter measurement is assembled and the measurement note sheets for recording observations are prepared. The following information will be recorded for each discharge measurement:

1. Name of canal and location to correctly identify the established gauging site.
2. Date, party, type of meter suspension, and meter number.
3. Time measurement was started using military time (24-hour clock system).

4. Bank of stream that was the starting point.
5. Control conditions.
6. Gauge heights and corresponding times.
7. Water temperature
8. Other pertinent information regarding the accuracy of the discharge measurement and conditions which might affect the stage-discharge relation.

The canal bank is identified by the letters LEW or REW (left edge of water or right edge of water, respectively, when facing downstream). The time is recorded periodically in the notes during the course of the measurement. The time observations are important for computing the mean gauge height of the discharge measurement. When the discharge measurement is completed, the time is recorded alongwith the canal bank (LEW or REW) where the measurement ended.

After the note sheet is ready, the meter assembly is checked. The meter should balance on the hanger used and should spin freely; the electric circuit through the meter should operate satisfactorily; and the stopwatch should check satisfactorily in a comparison with the hydrographer's watch. After recording on the note sheet the station (distance from initial point) of the edge of water, the actual measurement is ready to be started.

Depth (if any) at the edge of water is measured and recorded. The depth determines the method of velocity measurement to be used, normally the two-point method or the 0.6-depth method. The setting of the meter for the particular method to be used is then computed, and the meter position is recorded, using a designation such as 0.8 or 0.6 or 0.2, as the case may be. After the meter is placed at the proper depth and pointed into the current, the rotation of the rotor is permitted to become adjusted to the speed of the current before the velocity observation is started. The time required for such adjustment is usually only a few seconds if velocities are greater than 1 f/s (0.3 m/s), but for slower velocities, particularly if the current meter is suspended on a cable, a longer period of adjustment is needed. After the meter has become adjusted to the current, the number of revolutions made by

the rotor is counted for a period of 40 to 70 seconds. The stopwatch is started simultaneously with the first signal or click, which is counted as "zero", and not "one". The count is ended on a convenient number coinciding with one of those given in the column headings of the meter rating table. The stopwatch is stopped on that count and is read to the nearest second or to the nearest even second if the hand of the stopwatch is on a half-second mark. That number of seconds and the number of revolutions are then recorded.

If the velocity is to be observed at more than one point in the vertical, the meter setting for the additional observations is determined, the revolutions are timed, and the data are recorded. The hydrographer moves to each of the observation verticals and repeats the above procedure until the entire cross-section has been traversed. For each vertical, he records distance from initial point, water depth, meter-position depth, revolutions of the meter, and the time interval associated with those revolutions.

Consideration must be given to the direction of flow, because it is the competent of velocity normal to the measurement section that must be determined. The meter on a wading-rod suspension should be pointed into the current. Any meter on a cable suspension will automatically point into the current because of the effect of the meter vanes. When the meter is pointed into an oblique current the measured velocity must be multiplied by the cosine of the angle "alpha" between the current and a perpendicular to the measurement section in order to obtain the desired normal component of the velocity. If the angle "alpha" is very large, a new site should be selected. Exhibit V-1 presents two work sheets that can be used for current meter measurement and discharge determinations.

B. Measurement of Velocity

The current meter measures velocity at a point. The method of making discharge measurements at a cross-section requires determination of the mean velocity in each of the selected verticals. The velocity distribution is not uniform with depth. A typical vertical velocity curve is shown on Figure V-2. The mean velocity in a vertical is obtained from velocity observations at

many points in that vertical, but can be approximated by making a few velocity observations and using a known relation between those velocities and the mean in the vertical. The more commonly used methods of determining mean vertical velocity are:

1. Two point method
2. Six-tenths-depth method
3. Vertical velocity curve
4. Subsurface method
5. Integration method
6. Two-tenths method
7. Three point method
8. One-point continuous method

The two-point method consists of measuring the velocity at 0.2 and then at 0.8 of the depth from the water surface and using the average of the two measurements. The accuracy obtainable with this method is high and its use is recommended. The method should not be used where the depth is less than 2 feet.

The six-tenths-depth method consists of measuring the velocity at 0.6 of the depth from the water surface and is generally used for shallow flows where the two-point method is not applicable. The method gives fairly satisfactory results.

The vertical velocity-curve method consists of measuring the velocities at equal vertical intervals of 0.5 foot or more and calculating their arithmetical mean, or finding the mean value from a curve obtained by plotting the measurements on cross-section paper. The method is very accurate, but is time consuming and costly. Normally, it is used only for initial station calibrations.

The subsurface method involves measuring the velocity near the water surface and then multiplying it by a coefficient ranging from 0.85 to 0.95, depending on the depth of water, the velocity, and the nature of the canal bed. The

difficulty of determining the exact coefficient limits the usefulness and accuracy of this method. It is not recommended for canal work.
The integration method is performed by observing the velocity along a vertical line by slowly and uniformly lowering and raising the meter throughout the range of water depth two or more times. The method is not accurate and should be used only for comparisons or quick rough checks.

The two-tenths, three-point, and one-point continuous methods are special procedures based on a relationship, previously established for the section, between the true discharge and the velocities observed by these methods. These methods are generally reliable for sections which undergo no serious changes because of erosion, sedimentation or other deformation. Of the methods cited in this section, the two-point method and the six-tenth-depth method are the ones recommended for in use in canal work.

C. Measurement by Wading

Current meter measurements are best made by wading, if conditions permit. Wading measurements have a district advantage over measurements made from cableways or bridges in that it is usually possible to select the best of several available cross-sections for the measurement. The type of meter and velocity method to be used for wading measurement at various depths are as follows:

Depth (ft)	Depth (m)	Meter	Velocity method
2.5 or more	0.76 or more	Type AA (or type A)	0.2 and 0.8
1.5-2.5	0.46-0.76	---do---	0.6
.3-1.5	.09- .46	Pygmy 1/	0.6

1/ Used when velocities are less than 2.5 ft/s (0.76 m/s)

Some departure is permissible. For example, if a type AA is being used in a measurement section that has a almost all its depths greater than 1.5 ft (0.46 m), the pygmy meter should not be substituted for the few depths that are

less than 1.5 ft, or vice versa. With regard to the use of the type AA meter in depths less than 1.5 ft, strictly speaking, that meter should not be used in depths less than 1.25 ft (0.38 m). A depth of 1.25 ft will accommodate the 0.6 depth method without causing the meter to be set closer than 0.5 ft from the stream bed; if the meter is set any closer to the stream bed it will under register the velocity. However, if the hydrographer is using the type AA meter in a measurement section that has only few verticals shallower than 1.25 ft, he may use that meter for depths that are even as shallow as 0.5 ft (0.15 m) without changing to a pygmy meter. The under registering the velocity by some unknown percentage in the depths shallower than 1.25 ft, but if that shallow-depth flow represents less than 10 percent of the total discharge, his total measured discharge at the site should not be too greatly in error.

The hydrographer should stand in a position that least affects the velocity of the water passing the current meter. The position is usually obtained by facing the bank so that the water flows against the side of the leg. The wading rod is held at the tag line by the hydrographer who stands about 3 inches (0.07 m) downstream from the tag line and at least 1.5 ft (0.46 m) from the wading rod. He should avoid standing in the water if his feet and legs occupy a significantly large percentage of a narrow cross-section. In small canals where the width permits, the hydrographer stands on an elevated plank or other support, rather than in the water.

The wading rod should be held in a vertical position with the meter parallel to the direction of flow while the velocity is being observed. If the flow is not at right angles to the tag line, the angle coefficient should be carefully measured.

When measuring canals having shifting beds, the soundings or velocities can be affected by the scoured depressions left by the hydrographer's feet. For such canals, the meter should be placed ahead of and upstream from the feet. For such canals, too, the hydrographer's notes should accurately describe the configuration of the canal and water surface.

D. Measurement from a Boat

Discharge measurements are made from boats where no cableways or suitable bridges are available and where canals are too deep to wade. In making a boat measurement the tag line is first strung across the measurement section by unreeling the line as the boat moves across the canal. Some tag-line reels are equipped with brakes to control the line tension during the unreeling. If a tag line whose reel is unequipped with a brake has been strung across a canal, the slack is taken up by means of a block and tackle attached to the reel and to an anchored support on the bank. One method of positioning the boat for measuring depths and velocities is by sliding the boat along the tag line from one observation vertical to another. Where the width of the canal is too great for a tag line to be used, other means are needed to position the boat. One method that dispenses with the tag line involves keeping the boat lined up with flags positioned on each end of the measurement cross-section. Flags on one bank would suffice, but it is better to have them on both banks. The position of the boat in the cross-section can be determined by means of a transit on the shore and a stadia rod held in the boat. Another method of determining the position of the boat is by setting a transit on one bank at a convenient measured distance from, and at right angles to, the cross-section. The position of the boat is computed by measuring the angle to the boat, as shown in Figure V-3. A third method of determining the position of the boat requires a sextant in the boat. The sextant is used to read the angle between a flag at the end of the cross-section and another at a known distance perpendicular to the cross-section. The boat position can be computed from the measured angle and the known distance between the flags on the bank. Unless anchoring is more convenient, the boat must be held stationary by its motor when readings are being taken.

Boat measurements are not recommended where velocities are slower than 1 ft/s (0.3 m/s) when the boat is subject to the action of wind and waves. If the maximum depth in the cross-section is less than 10 ft (3 m) and the velocity is low, a rod is usually used for measuring the depth and supporting the current meter. For greater depths and velocities, a cable suspension with reel, boat boom, and sounding weight is used.

E. Computation of Mean Gauge Height

The mean gauge height of a discharge measurement represents the mean stage of the canal during the measurement period. Because the mean gauge height for a discharge measurement is one of the coordinates used in plotting the measurements to establish the stage-discharge relation, an accurate determination of the mean gauge height is as important as an accurate measurement of the discharge. The computation of the mean gauge height presents no problem when the change in stage is uniform and no greater than about 0.15 ft (0.05 m), for then the mean may be obtained by averaging the stage at the beginning and end of the measurement. However, measurements must often be made during periods when the change of stage is neither uniform nor slight.

As a prerequisite for obtaining an accurate mean gauge height, the clock time at the beginning and end of the measurement should be recorded on the measurement notes, and additional readings of the clock time should be recorded on the notes at intervals of 15 to 20 minutes during the measurement. After the discharge measurement has been completed, the recorder chart should be read, and breaks in the slope of the gauge-height graph that occurred during the measurement should be noted. The breaks in slope are useful in themselves and are also used to determine the gauge height corresponding to the clock times noted during the measurement. At nonrecording stations the only way to obtain intermediate readings is for the stream gauger to stop a few times during the measurement to read the gauge, or to have someone else do this for him. Normally the gauge reader can be assigned to read the staff gauge at 15 to 20 minute intervals.

If the change in stage is greater than 0.15 ft (0.05 m) or if the change in stage has not been uniform, the mean gauge height is obtained by weighing the gauge heights corresponding to the clock time observations. The weighing is done by using either partial discharge or time as the weighing factor. In U.S.A. a recent study indicates that discharge weighing usually tends to overestimate the mean gauge height, whereas time weighing usually tends to underestimate the mean gauge height. On the basis of the present state of the knowledge, it is suggested that the mean gauge height for a

discharge measurement be computed by both methods, after which the two results are averaged. A description of the two methods follows.

$$H = \frac{q_1h_1 + q_2h_2 + q_3h_3 \ldots\ldots\ldots q_nh_n}{Q} \quad (5.3)$$

in which

H = mean gauge height (ft or m)

Q = total discharge (ft^3/s or m^3/s) = $q_1 + q_2 + q_3 \ldots\ldots + q_n$

where

$q_1 + q_2 + q_3 \ldots\ldots + q_n$ = discharge (ft^3/s or m^3/s) measured during time interval 1, 2, 3, ...n and

$h_1 + h_2 + h_3 \ldots\ldots + h_n$ = Average gauge height (ft or m) during the interval 1, 2, 3,....n

In the time weighing process, the arithmetic mean gauge height for time intervals are used with the duration of those time periods. The formula used to compute mean gauge height is

$$H = \frac{t_1h_1 + t_2h_2 + t_3h_3 \ldots\ldots\ldots + t_nh_n}{T} \quad (5.4)$$

in which

H = mean gauge height, in feet or meters

T = total time for the measurement, in minutes = $t_1 + t_2 + t_3 \ldots\ldots t_n$

where

$t_1 + t_2 + t_3 \ldots\ldots t_n$ = duration of time intervals between gauge-height readings, in minutes, and

$h_1 + h_2 + h_3 \ldots\ldots h_n$ = average gauge height, in feet or meters, during time interval 1, 2, 3, ...n

When extremely rapid changes in stage occur during a measurement, the weighted mean gauge height is not truly applicable to the discharge measured. To reduce the range in stage during the measurement, measurements under those conditions should be made more rapidly than those made under constant

or slowly changing stage. It should be realized, however, that shortcuts in the measurement procedure usually reduce the accuracy of the measured discharge. Therefore, measurement procedures during rapidly changing stage must be optimized to produce a minimal combined error in measured discharge and computed mean gauge height.

Section 5: Current Meters and Related Equipment

A. Introduction

The essential features of conventional current meters are a wheel which rotates when immersed in flowing water and a device for determining the number of revolutions of the wheel. The relationship between the velocity of the water and number of revolutions of the wheel per unit of time are determined for each instrument under controlled conditions. In Punjab the Irrigation Department, XEN Discharge Division, operates a rating flume to calibrate and check current meters. In Sind, the Hydraulic Research Station, Hyderabad has similar facilities. The current meters are manufactured and repaired at the Irrigation Department facilities at Hyderabad. Calibration is supplied in the form of an equation from which a rating table is compiled. A sample rating table is shown in Figure V-4 for a meter with the equation $V = 2.14N + 0.03$ for N values less than 1.00 revolution per second, and the equation $V = 2.19\ N - 0.01$ for N values greater than 1.00 revolution per second. In these equations V is the velocity in feet per second and N is the number of wheel revolutions per second. Each meter is calibrated for the types of suspensions with which it may be used. The two principal types of suspensions are wading rod and cables. Since its accuracy is greatly affected by dirt or damage, the instrument should be rated at least once a year.

B. Price-Type Meter

Conventional meters are of two general types; 1) the propeller type with horizontal axis and 2) the cup type with vertical axis. The Price meter, cup-type instrument with a vertical axis was developed by the U.S. Geological Survey and was adopted by Pakistan for irrigation water measurements. This meter has the following general features: vanes to keep the wheel headed into the current, either a cable or a rod for handling the meter, weights for

sinking the meter when it is suspended on a cable, an electric device for signaling the number of revolutions and connections from the current meter to a 1-1/2 volt battery-powered headphone, see Figure V-5.

Two standard Price type meters have been adopted in Pakistan. These are the type AA meter with the Columbus-Type weights or a wading rod and the type BTA meter. (The pygmy meter, discussed in the following subsection, is a modification of the standard Price meter). The BTA meter has the same pivot, hub assembly and shaft as the type AA meter, which obviates maintaining two sets of repair parts. The parts for type AA and BTA meters are interchangeable except for the yoke and the contact chamber. Two sets of revolution-indicating contacts are provided in the type AA and type BTA meters; one is for indicating each revolution of the bucket wheel, and the other for indicating every five revolutions. The electrical cable should be connected to the counter most appropriate for the anticipated bucket wheel speeds is shown in Figure V-6.

C. Pygmy Meters

Pygmy meters are similar to Price meters in that both contain a cup-type bucket wheel mounted on a vertical shaft. The Pygmy bucket wheel is 2 inches in diameter, compared with 5 inches for the conventional Price meters. The contact chamber is an integral part of the yoke, and contains a single-revolution contact only (Figure V-7). There is no tailpiece, and no provision is made for cable suspension. The rotational speed of the Pygmy meter bucket wheel is more than twice that of the Price meters, and consequently use of the Pygmy meter is limited to velocities up to 3 or 4 feet per second.

The Pygmy meter was specially designed for use in small shallow canals. The smaller meter was necessary because a standard Price meter does not perform with sufficient accuracy when it occupies a good share of the available stream depth. The Pygmy meter may also be used near the embankment of large canals where the velocity of flow is low to supplement data taken farther out in the channel with a Price meter.

D. **Wading Rods**

Two types of wading rods are available for supporting the current meters when working in shallow and moderate depth streams. They are the conventional round rod and the more convenient top setting rod. Both use a baseplate that rests on the bottom of the flow channel.

The round rod (Figure V-6) is made of several sections of 1/2-inch diameter nickel-plated round brass tubing 1 foot long. The rod is graduated at intervals of 0.1 foot by circumferential grooves. A single groove is used at the 0.1 foot graduations, double grooves at the 1/2 foot intervals, and triple grooves at one the foot marks. A nickel-plated sliding support machined from a bronze casting moves up or down on the rod and is held at any desired location by a spring-actuated set screw. The current meter and the vanes, if used, attach to this sliding support.

The top-setting wading rod permits all settings to be made in-the-dry, and has a main column of 1/2 inch hexagonal stock and a meter positioning rod of 3/4 inch diameter stock. The main rod attaches to the baseplate and is graduated in 0.1 foot intervals so depths of flow can be measured. Intervals marking are the same as those used on the round rods. The meter is secured to the lower end of the positioning rod and guided by means of a sliding support on the main rod. The position of the meter and sliding support is set by raising or lowering the positioning rod which extends through the handle at the top of the main rod. Once set, the positioning rod, and, hence, the sliding support and meter, is secured by a locking device on the handle. Thus, all adjustments are made at a height convenient for the operator and at a location above water so the operator can keep his hands and the log book dry.

E. **Care of Current Meters**

Current meters must receive the best of care during transportation and use to ensure accurate velocity measurements. Particular care should be taken when working near bridge piers, abutments, around floating drift and when measurements are being taken at irregular or unknown sections and the meter is suspended on a measuring line. If the cups or blades become bent or

damaged, the results obtained from the rating curve for the meter will be unreliable. After completing the measurements at a rating station, the meter should be carefully cleaned, and after each day's use it should be properly lubricated.

Meter damage usually occurs as a result of improper packing and careless handling in transportation. Meters should be transported in wooden or other rigid cases with properly fitted interior supports to prevent movement and damage to the delicate parts. They should be carried on the seat of the transporting vehicle, not in the back of a pick-up or on the floor or trunk of a car.

F. General Field Procedures and Precautions

Accuracy of measurement may be maintained by observing the following precautions for Price meters (including the Pygmy meter).

(1) The condition of the bearing may be checked in the field by a spin test. With the shaft in a vertical position and the cups protected from air currents, the cups should be given a quick turn to start them spinning. If the meter is in proper adjustment and the bearings are free from foreign particles, the cups should come to rest in not less than 3 minutes. If the length of spin is only about 1-1/2 minutes but the bucket wheel comes to rest gradually, all flows except those very low velocities may be measured. If the length of spin is only about 1 minute but the bucket wheel comes to rest gradually, the meter may still be used to measure velocities above 1 foot per second. If the length of spin is less than 1 minute, the meter should be reconditioned. Under laboratory controlled conditions, rotation should continue for about 4 minutes. The manner in which rotation ceases should be observed because it helps indicate the condition of the meter.

(2) The cross-section of the canal should be divided vertically into 20 or more parts. Very small canals are exceptions and a somewhat smaller number of segments of the canal cross-section may be

sufficient if the distance between verticals becomes less than 1 foot. The divisions are generally selected so that there will be not more than 10 percent, and preferably not more than 5 percent of the discharge between any two adjacent verticals.

(3) The stopwatch should be checked frequently and kept in good repair.

(4) For low and irregular velocities the period of observation should be lengthened to obtain a more accurate average count.

(5) The meter should be spin tested again after completing the measurement to ensure that no change has occurred.

DISCHARGE MEASUREMENT NOTES

Measurement Station

Date:

Party:

Width_____ Area _____ Vel._____ G.H._____Disch:_____

Method Coef._____No.Secs._____ G.H.Change_____in_____ hrs_____

Meter No._____Date rated_____ Used rating for _____

Susp_____ ft above bottom of weight; tags checked_____

Temp:Air_____°C at _____hr water_____°C at _____hr_____

Spin before measurement_____ after_____

Meas. & Location: Wading, Cable, Upstr., Downstr, Side, Bridge_____ft, RD,

above below gauge and _____

Measurement rated Excellent (2%), Good (5%) Fair (8%) Poor (Over 8%) based on following conditions: Section:_____

Flow _____ Weather_____

Gauge_____

Other_____

Observer_____

Control_____

Remarks_____

_____

Gauge Height of Zeroflow_____ ft Elev. Ref. pt._____

_____

_____

GAUGE READINGS

Time	Recorder	Stilling Well	Outside

Weighted Mean Gauge Height _____

Gauge Height Correction _____

Correction Mean Gauge Height _____

DISCHARGE MEASUREMENT NOTES

Angle Coef.	Dist. From Initial Point ft	Gauge Height ft	Width ft	Total depth of water ft	Depth meter below W.S.	Rev-olu-tions	Time in Sec.	Velocity At Point ft/s	Velocity Mean in ver-ticals ft/s	Area ft^2	Dis-charge cfs

Notes:

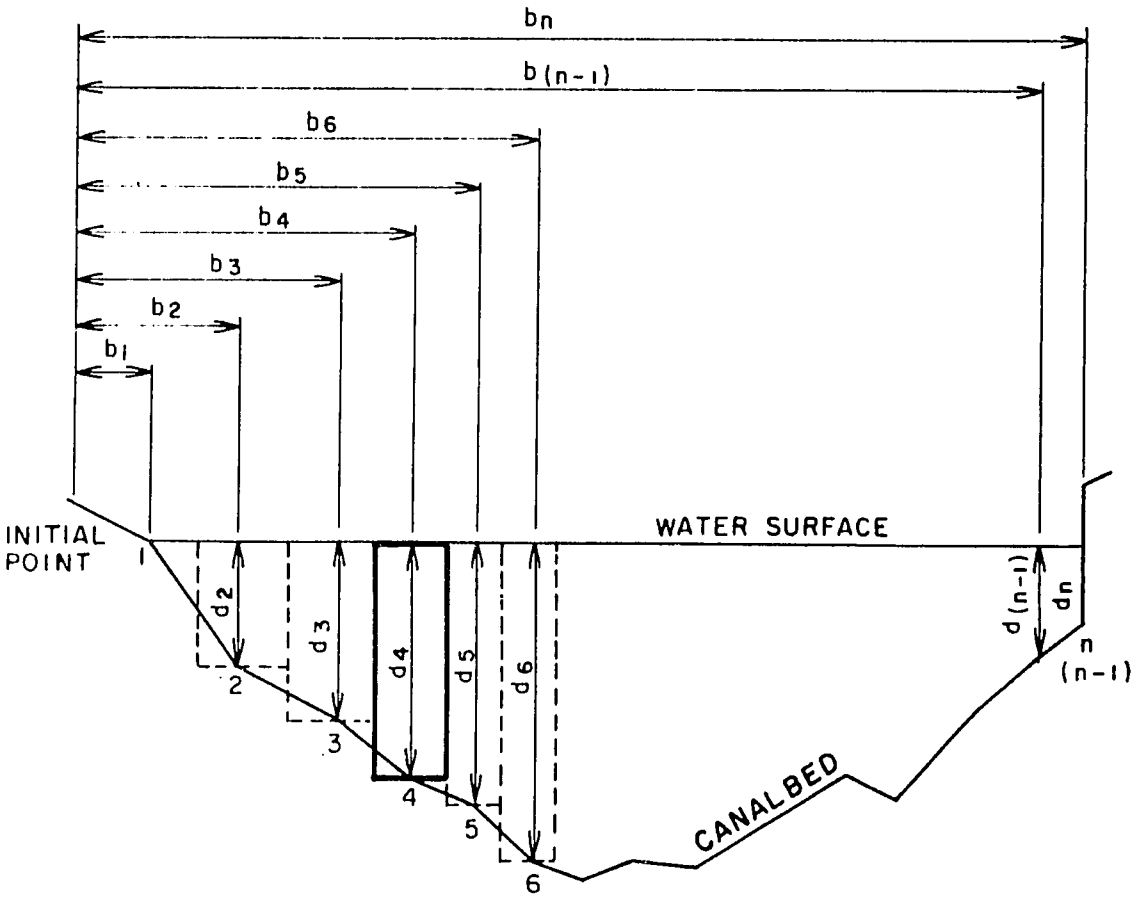

EXPLANATION

1, 2, 3 ..... n	OBSERVATION VERTICALS.
$b_1, b_2, b_3, \ldots b_n$	DISTANCE, IN FEET OR METERS, FROM THE INITIAL POINT TO THE OBSERVATION VERTICAL.
$d_1, d_2, d_3, \ldots d_n$	DEPTH OF WATER, IN FEET OR METERS, AT THE OBSERVATION VERTICAL.
DASHED LINES	BOUNDARIES OF SUBSECTIONS; ONE HEAVILY OUTLINED IS DISCUSSED IN TEXT.

DEFINITION SKETCH OF MIDSECTION METHOD OF COMPUTING CROSS-SECTION AREA FOR DISCHARGE MEASUREMENTS

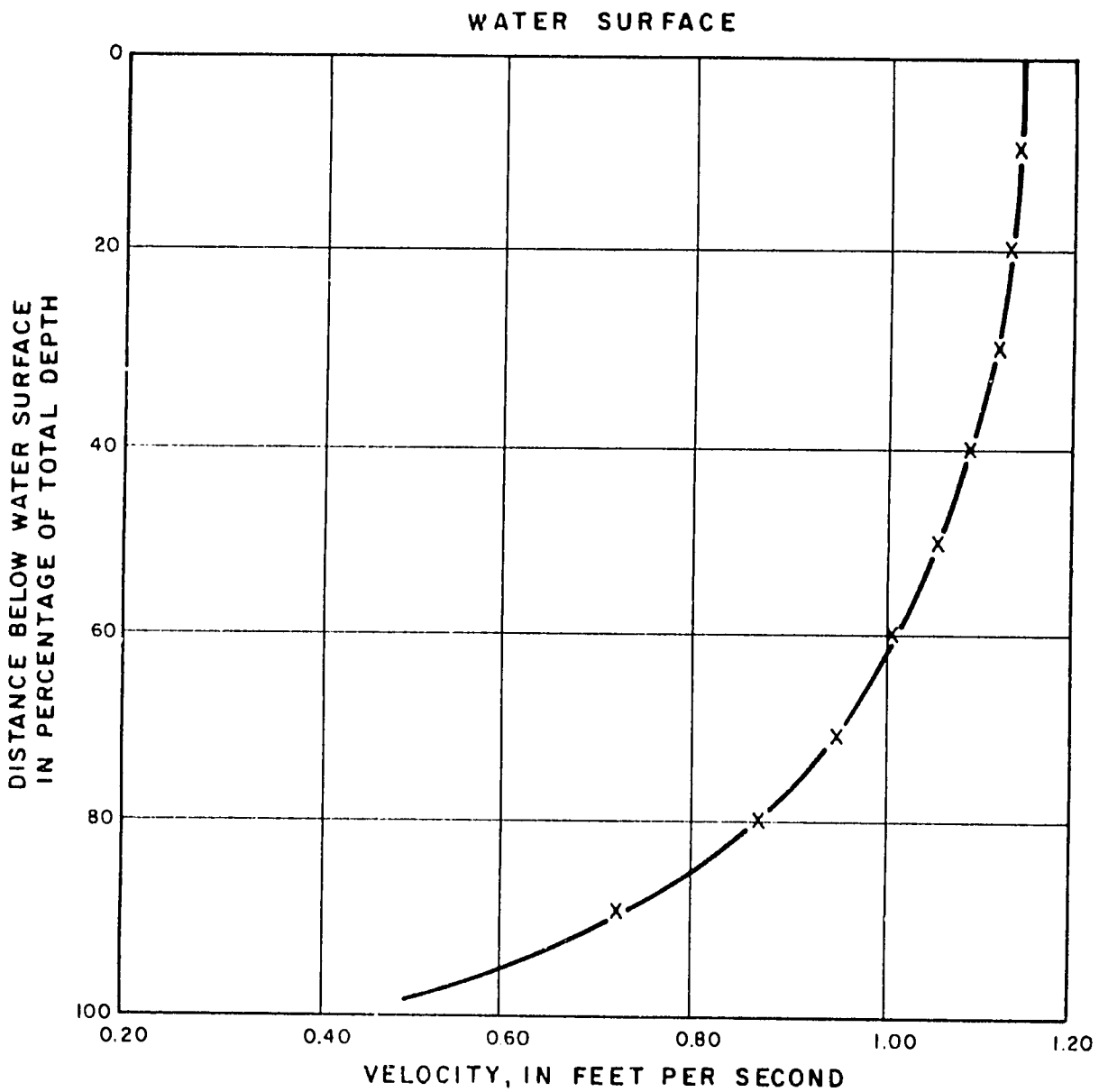

COEFFICIENTS FOR STANDARD VERTICAL-VELOCITY CURVE

RATIO OF OBSERVATION DEPTH TO DEPTH OF WATER	RATIO OF POINT VELOCITY TO MEAN VELOCITY IN THE VERTICAL
0.05	1.160
.1	1.160
.2	1.149
.3	1.130
.4	1.108
.5	1.067
.6	1.020
.7	.953
.8	.871
.9	.746
95	.648

TYPICAL VERTICAL-VELOCITY CURVE

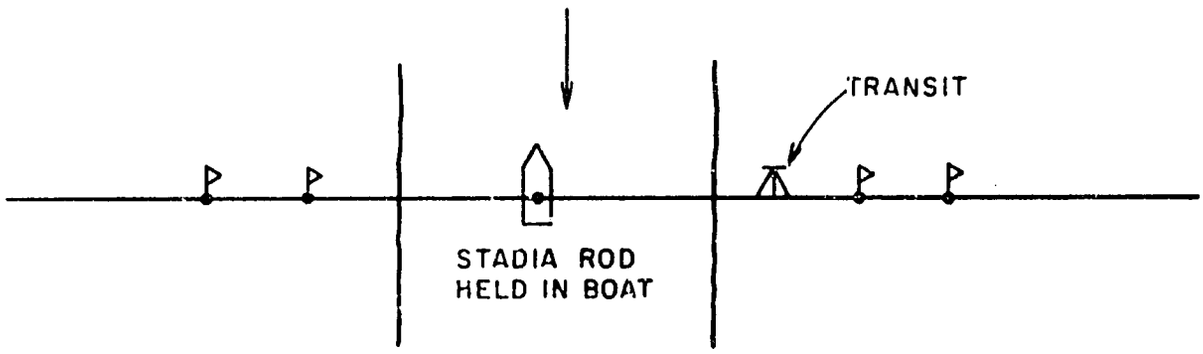

FIG. a - DETERMINING POSITION IN THE CROSS SECTION, STADIA METHOD

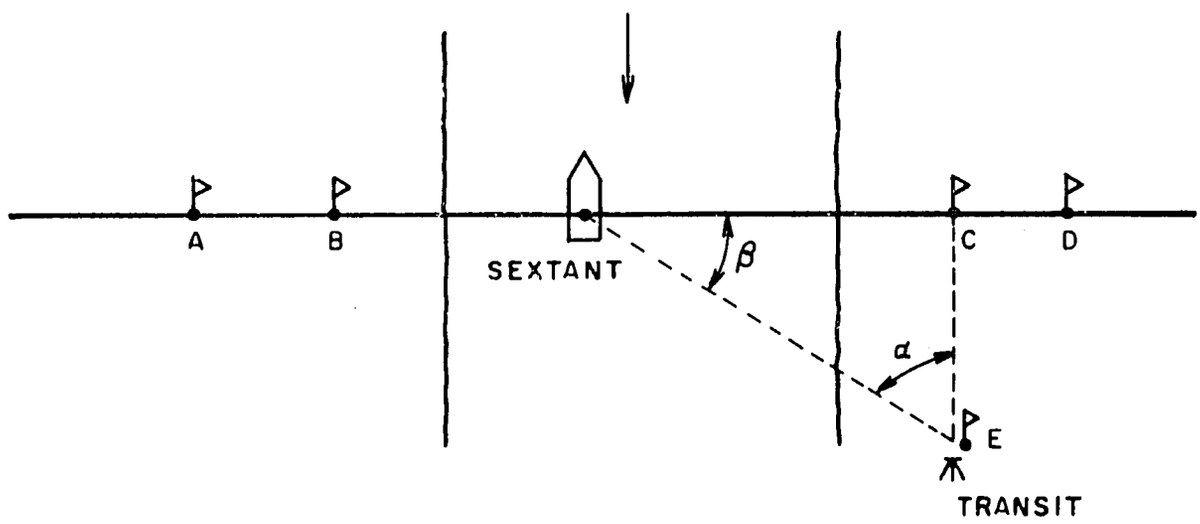

$MC = CE \tan \alpha$ (TRANSIT)

$MC = \frac{CE}{\tan \beta}$ (SEXTANT)

FIG. a - DETERMINING POSITION IN THE CROSS SECTION, ANGULAR METHOD

LOCATING BOAT IN
MEASURING CROSS SECTION

DEPARTMENT OF INTERIOR - BUREAU OF RECLAMATION

RATING TABLE FOR TYPE _____ METER NO _____

SUSPENSION _____ RATED _____

EQUATIONS: $V = 2.14\,N + 0.03$ $N < 1.00$; $V = 2.19\,N - 0.01$ $N > 1.00$ _____ BY _____

*Limits of Actual Rating _____ to _____ ft. per sec. _____

at Bureau of Standards, Washington, D.C.

Condition of Meter

Time Seconds	VELOCITY IN FEET PER SECOND — Revolutions									Time Seconds
	3	5	7	10	15	20	25	30	40	
40	0.190	0.297	0.404	0.565	0.832	1.10	1.37	1.63	2.17	40
41	0.184	0.291	0.398	0.552	0.813	1.07	1.34	1.60	2.12	41
42	0.181	0.284	0.387	0.539	0.793	1.05	1.30	1.56	2.07	42
43	0.179	0.278	0.378	0.528	0.776	1.03	1.27	1.52	2.02	43
44	0.175	0.271	0.370	0.515	0.759	1.00	1.25	1.49	1.98	44
45	0.173	0.267	0.363	0.505	0.742	0.980	1.22	1.46	1.93	45
46	0.169	0.263	0.355	0.494	0.727	0.960	1.18	1.43	1.89	46
47	0.167	0.259	0.348	0.485	0.712	0.941	1.17	1.40	1.85	47
48	0.165	0.252	0.342	0.475	0.697	0.922	1.14	1.37	1.81	48
49	0.162	0.248	0.335	0.466	0.684	0.903	1.12	1.34	1.78	49
50	0.159	0.244	0.329	0.455	0.672	0.888	1.10	1.31	1.74	50
51	0.157	0.239	0.323	0.449	0.659	0.868	1.08	1.29	1.71	51
52	0.154	0.235	0.318	0.440	0.646	0.853	1.06	1.26	1.68	52
53	0.151	0.231	0.312	0.434	0.635	0.836	1.04	1.24	1.65	53
54	0.149	0.224	0.306	0.425	0.624	0.821	1.02	1.22	1.62	54
55	0.147	0.224	0.301	0.419	0.614	0.808	1.00	1.20	1.59	55
56	0.145	0.220	0.297	0.413	0.603	0.793	0.984	1.18	1.56	56
57	0.143	0.218	0.293	0.404	0.592	0.781	0.967	1.16	1.53	57
58	0.141	0.214	0.288	0.398	0.584	0.768	0.952	1.14	1.51	58
59	0.139	0.211	0.284	0.391	0.573	0.755	0.937	1.12	1.48	59
60	0.137	0.207	0.280	0.387	0.565	0.742	0.922	1.10	1.46	60
61	0.134	0.205	0.276	0.380	0.554	0.731	0.907	1.08	1.43	61
62	0.132	0.203	0.271	0.374	0.547	0.721	0.892	1.07	1.41	62
63	0.132	0.199	0.267	0.370	0.539	0.708	0.879	1.05	1.39	63
64	0.130	0.196	0.263	0.363	0.530	0.697	0.866	1.03	1.37	64
65	0.128	0.194	0.261	0.359	0.524	0.689	0.853	1.02	1.35	65
66	0.126	0.192	0.256	0.355	0.515	0.678	0.841	1.00	1.33	66
67	0.124	0.190	0.252	0.348	0.507	0.667	0.828	0.988	1.31	67
68	0.124	0.188	0.250	0.344	0.502	0.659	0.817	0.973	1.29	68
69	0.122	0.184	0.246	0.340	0.494	0.650	0.804	0.960	1.27	69
70	0.120	0.181	0.244	0.335	0.487	0.642	0.793	0.945	1.25	70
	3	5	7	10	15	20	25	30	40	

Time Seconds	VELOCITY IN FEET PER SECOND — Revolutions									Time Seconds
	40	60	80	100	150	200	250	300	350	
40	2.73	3.27	4.37	5.47	8.20	10.94	13.68	16.42	19.15	40
41	2.66	3.19	4.26	5.33	8.00	10.67	13.34	16.01	18.68	41
42	2.60	3.12	4.16	5.20	7.81	10.42	13.02	15.63	18.24	42
43	2.54	3.05	4.06	5.08	7.63	10.18	12.72	15.27	17.82	43
44	2.48	2.98	3.97	4.97	7.46	9.94	12.43	14.92	17.41	44
45	2.42	2.91	3.88	4.86	7.29	9.72	12.15	14.58	17.02	45
46	2.37	2.85	3.80	4.75	7.13	9.51	11.89	14.27	16.65	46
47	2.32	2.79	3.72	4.65	6.98	9.31	11.64	13.96	16.30	47
48	2.27	2.73	3.64	4.55	6.83	9.11	11.40	13.68	15.96	48
49	2.22	2.67	3.57	4.46	6.69	8.93	11.16	13.40	15.63	49
50	2.17	2.62	3.49	4.37	6.56	8.75	10.94	13.12	15.32	50
51	2.13	2.57	3.43	4.28	6.43	8.58	10.73	12.87	15.02	51
52	2.09	2.52	3.36	4.20	6.31	8.41	10.52	12.63	14.73	52
53	2.05	2.47	3.30	4.12	6.19	8.25	10.32	12.39	14.45	53
54	2.01	2.42	3.23	4.05	6.07	8.10	10.13	12.16	14.18	54
55	1.98	2.38	3.18	3.97	5.96	7.95	9.94	11.94	12.53	55
56	1.94	2.34	3.12	3.90	5.86	7.81	9.77	11.72	13.66	56
57	1.91	2.30	3.06	3.83	5.75	7.67	9.60	11.52	13.44	57
58	1.87	2.26	3.01	3.77	5.65	7.54	9.43	11.32	13.20	58
59	1.84	2.22	2.96	3.70	5.56	7.41	9.27	11.13	12.98	59
60	1.81	2.17	2.91	3.64	5.47	7.29	9.12	10.94	12.76	60
61	1.78	2.13	2.86	3.58	5.38	7.17	8.96	10.76	12.55	61
62	1.76	2.10	2.82	3.52	5.29	7.05	8.82	10.59	12.35	62
63	1.73	2.07	2.77	3.47	5.20	6.93	8.68	10.42	12.16	63
64	1.70	2.04	2.73	3.41	5.12	6.83	8.54	10.26	11.97	64
65	1.68	2.01	2.69	3.36	5.04	6.73	8.41	10.10	11.78	65
66	1.65	1.98	2.64	3.31	4.97	6.63	8.29	9.94	11.60	66
67	1.63	1.95	2.60	3.26	4.89	6.53	8.16	9.80	11.43	67
68	1.60	1.92	2.57	3.21	4.82	6.43	8.04	9.65	11.26	68
69	1.58	1.89	2.53	3.16	4.75	6.34	7.92	9.51	11.10	69
70	1.56	1.86	2.47	3.12	4.68	6.25	7.81	9.38	10.94	70
	40	60	80	100	150	200	250	300	350	

TYPICAL CURRENT METER RATING TABLE

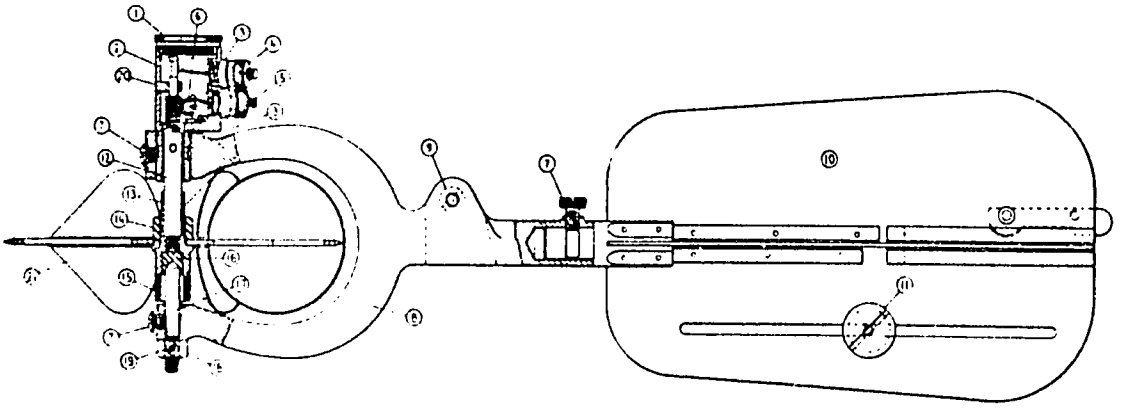

ASSEMBLY

LIST OF PARTS

1 Cap for contact chamber
2 Contact chamber
3 Insulating bushing for contact binding post
4 Single contact binding post
5 Penta contact binding post
6 Penta gear
7 Set screws
8 Yoke
9 Hole for hanger screw
10 Tailpiece
11 Balance weight
12 Shaft
13 Bucket-wheel hub
14 Bucket-wheel hub nut
15 Raising nut
16 Pivot bearing
17 Pivot
18 Pivot adjusting nut
19 Keeper screw for pivot adjusting nut
20 Bearing lug
21 Bucket wheel

NOTE

Suspension distances listed below are measured from horizontal axis of the meter to the bottom of the weight along ℄ of hanger to the nearest tenth of a foot.

Use this hanger hole for suspension of Type AA meter:
- 0.9' above a 15-lb wt
- 0.9' " 30-lb "
- 0.9' " 50-lb " ✻
- 1.0' " 75-, 100-, or 150-lb weight ✻

Use this hanger hole for suspension of Type AA meter:
- 0.5 above a 15-lb wt ✻
- 0.5 " 50-lb "

Use this hanger hole for suspension of Type AA meter - 0.5' above a 30-lb wt ✻

✻ Preferred suspension

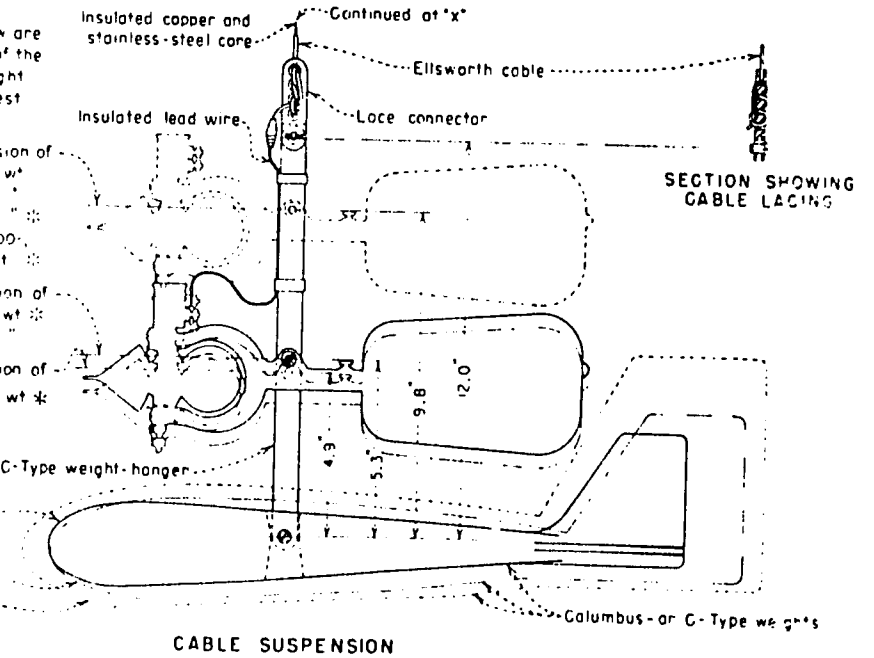

CABLE SUSPENSION

PRICE-TYPE CURRENT METER

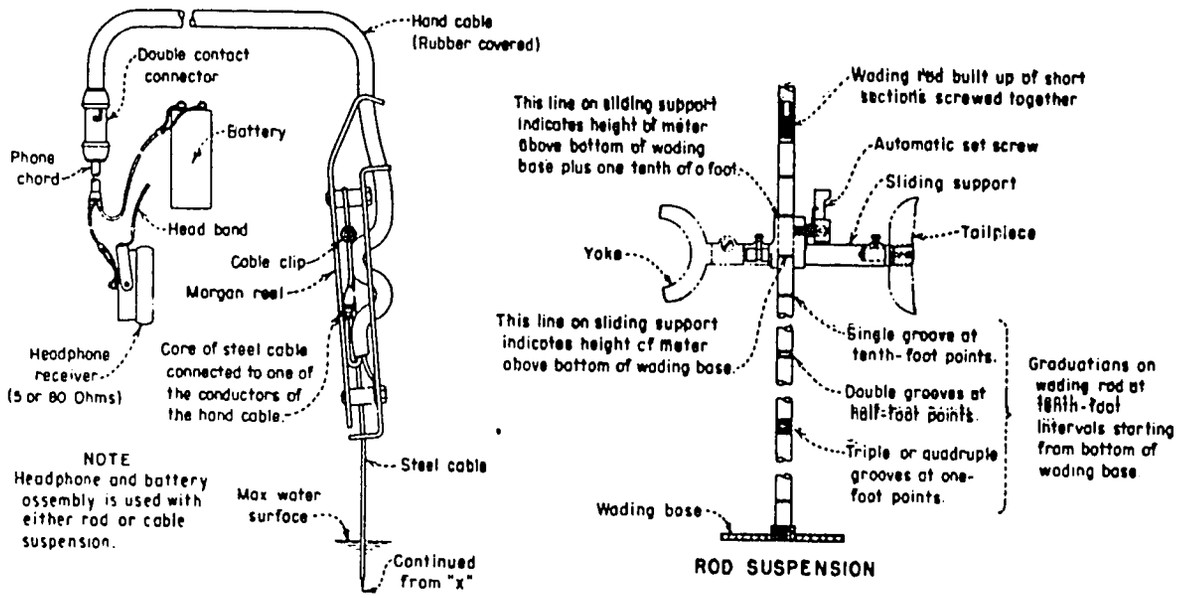

CURRENT METER
WADING ROD

LIST OF PARTS

1 Cap for contact chamber
2 Binding post beaded wire
3 Binding post insulated bushing
4 Binding post body
5 Binding post nut
6 Yoke
7 Yoke set screw
8 Upper bearing
9 Shaft
10 Bucket wheel hub
11 Bucket wheel hub nut
12 Bucket wheel
13 Pivot bearing
14 Pivot
15 Pivot set screw
16 Pivot adjusting nut keeper screw
17 Pivot adjusting nut

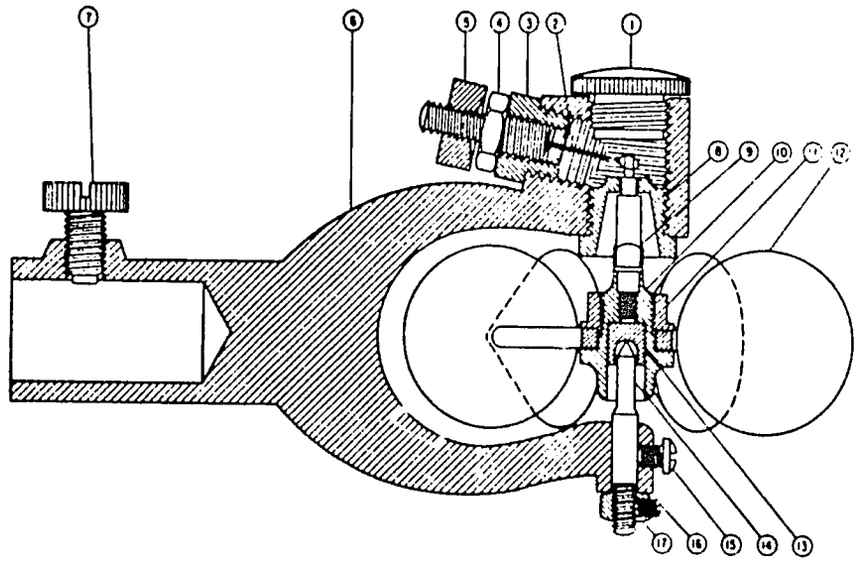

PYGMY METER

CHAPTER VI

ORIFICE HYDRAULICS

CHAPTER VI
ORIFICE HYDRAULICS

Section 1: Introduction

A well defined opening in a plate or bulkhead, the top of which is placed well below the upstream water level, is classified as an orifice. Flow under a vertical lift gate is a special case for a rectangular orifice. Except for the gated structure application, orifices are not recommended for inline use in canals, particularly alluvial canals with sediment. Orifices may be used for canals offtaking from another canal because it will not intercept the flow of the bed material load.

The orifice is one of the older devices for measuring water. Originally it was set up to discharge freely into the air, resulting in a considerable loss of head. To overcome this excessive head loss, the orifice is now designed with the tailwater above the top of the opening. This "submerged orifice" conserves head and can be used where there is insufficient fall for a sharp-crested weir or where the head difference is too small to produce modular flow with a broad-crested weir or flume.

There are several disadvantages of an orifice when applied in irrigation systems:

* Debris and weeds may collect upstream or lodge in the opening.
* Sediment accumulations upstream of the opening will obstruct and affect the discharge. This condition is difficult for operating personnel to determine.
* The opening is easily modified by farmers.
* Water surface must be sufficiently far above the opening to prevent vortex flow with air entertainment.

A major advantage of an orifice measuring device is that it is less sensitive to relative changes in head and shape of the control section than weirs or flumes. This can be important consideration where the canal inflow is subject

to a fair degree of variation over short periods of time; i.e., operating under slowly varied flow conditions which are reflected in changing water surface levels.

Section 2: Circular Orifices

A. Introduction

The circular sharp-edged orifice is often used for a measuring device in irrigation systems for turnouts located along a canal. In this location, sediment and trash problems are minimized. The circular orifice used for this purpose has three advantages:

(1) The canal water surface will normally remain within defined limits, thus precluding air entrainment and vortex flow;

(2) The orifice plate or bulkhead does not require leveling during installation; it only needs to be placed in a vertical positions; and

(3) The opening can be turned and its edges beveled with precision on a lathe.

The main disadvantage to a circular orifice is the same as with all orifices; it is easily damaged or modified by farmers to increase the flow through it.

B. Determination of Discharge

The flow of water through an orifice is illustrated in Figure VI-1. Water approaches the orifice with a relatively low velocity, passes through a zone of accelerated flow, and issues from the orifice as a contracted jet. If the orifice discharges into the air, there is modular flow; if it discharges under water it is known as a submerged orifice. If the orifice is not too close to the bottom, sides or water surface of the approach channel, the water particles approach the orifice along uniformly converging streamlines from all directions. Since these particles cannot abruptly change their direction of flow upon leaving the orifice, they cause the jet to contract. The section

where the contraction is maximum is known as the vena contracta. The vena contracta of a circular orifice is about half the diameter of the orifice itself.

The equation for discharge, Q, of water through a free discharging orifice can be written as:

$$Q = C_e C_v C_c A (2g h_1)^{0.5} \quad (6.1)$$

Where,

C_e = dimensionless coefficient of discharge for energy (head) loss through the orifice based on $H_1=V_1^2/2g$

C_v = approach velocity correction coefficient (dimensionless)

C_c = contraction coefficient or the ratio of the area of the vena contracta to the area of the orifice

A = area of orifice and equals $(\Pi d^2)/4$

g = acceleration of gravity, 32.2 ft/s^2 (9.81 m/s^2)

h_1 = depth of water upstream of the orifice measured from center of orifice (see Figure VI-1.A).

The product of C_e, C_v and C_c is called the effective discharge coefficient, C_d, so that Equation 6.1 can be written as

$$Q = C_d A/(2g h_1)^{0.5} \quad (6.2)$$

For low heads there is a significant difference between the flow velocity at the bottom and top of the orifice. In practice, this variation is corrected for in the values of C_d used. The depth of water above the orifice must be at least equal to the size of the opening d.

The use of an orifice in irrigation systems generally will be for submerged conditions where the orifice discharges under water as shown in Figure VI-1.B. Based on similar assumptions used to determine Equation 6.2 and that the eddy velocities around the jet are relatively low, the total discharge through a submerged orifice can be determined from the following:

$$Q = C_d A[2g(h_1-h_2)]^{0.5} \quad (6.3)$$

The value of C_d for free discharge and submerged discharge are not the same. The following tabulation gives the average effective discharge coefficients for small circular orifices.

AVERAGE DISCHARGE COEFFICIENTS, CIRCULAR ORIFICES
(Negligible Approach Velocity)

Orifice Diameter, d		Discharge Coefficient, C_d	
Meter	Inches	Free Flow	Submerged
0.02	0.79	0.61	0.57
0.025	0.98	0.62	0.58
0.035	1.38	0.64	0.61
0.045	1.77	0.63	0.61
0.050	1.97	0.62	0.61
0.065	2.56	0.61	0.60
0.075	2.95	0.60	0.60

The recommended lower limit of the differential head across the orifice is about 1.25 inches (0.03 m). Of significant influence on the contraction (diameter of the vena contracta) is the roughness of the orifice plate. If the lack of maintenance has allowed algae to grow on the orifice plate, the velocity parallel to the plate will decrease, causing a decreased contraction and an increased contraction coefficient hence an increased discharge.

Section 3: Rectangular Orifices

A rectangular orifice may be used in lieu of a circular orifice. The top and bottom edges must be parallel and horizontal, and the sides vertical. If these conditions are not met; the nominal effective discharge coefficient, C_d defined as 0.61 would not be valid. It is also important that the orifice plate is vertical and smooth.

The distance from the edge of the orifice to the bed and side slopes of the approach and tailwater channel should be greater than twice the least dimension of the orifice if full contraction is required.

The wetted cross-sectional area at the upstream head measurement station should be at least 10 times the area of the orifice so as to make sure the approach velocity is negligible; this is particularly important where full contraction is required.

The upper edge of the orifice should have a minimum upstream submergence of at least the height of the orifice opening, b. The width of the orifice, w is usually two or more times that of the height b. The area, A, is then defined as bw. Rectangular orifices have the same problem as circular with respect to sediment and trash. Equations 6.2 and 6.3 are valid for rectangular orifices for free discharge and submerged discharge respectively. For a fully contracted, submerged, rectangular orifice, the discharge coefficient is assumed to be 0.61. If the contraction is suppressed along part of the orifice perimeter, the following approximate discharge coefficient, C_d, may be used in Equation 6.3, regardless of whether the orifice bottom or both orifice bottom and sides are suppressed.

$$C_d = 0.61\ (1 + 0.15\ r) \qquad (6.4)$$

where, r = ratio of suppressed portion of the orifice perimeter to total perimeter. For example, where b = 0.25 ft and w = 1.0 ft and bottom and sides are suppressed, r = 1.5/2.5 or 0.60.

An orifice can be used as highly accurate flow measuring device in a irrigation system. If the orifice structure has not been previously rated in the laboratory, then it can easily be rated in the field. The hydraulic head term, h_1 or $h_1 - h_2$, can be relied upon to have the exponent 0.5, which means that a single field rating measurement, if accurately made, will provide an accurate determination of the coefficient of discharge, C_d. Generally, orifices have C_d values of about 0.60 to 0.80 depending on the geometry of the orifice structure.

Section 4 : Applications of Orifice Flow

There are many applications of orifice flow in irrigation systems. The most common application is for outlets to watercourses, gated headworks for canals and gated cross regulators (checks). Under certain conditions, flow through culverts or pipe outlets may be orifice flow. Outlets may be gated or ungated. Under certain operating conditions flow may switch from orifice to weir flow.

Orifice flow has been used for gated structures operating with submerged flow conditions where flow measurements are made directly from the measurement of (h_u - h_d). These include the constant head orifice (CHO) were the (h_u-h_d) is held constant and the "meter gate" system where (h_u - h_d) is measured on either side of the gate. The meter gate installation requires that the tailwater level be kept higher than the pipe outlet.

The ungated APM or AOSM outlets are standard in Pakistan and operates either in the free flow (modular flow) or occasionally in the submerged flow regime. These structures have not been calibrated to measure discharge. The outlets used in Pakistan are described in more detail in Chapter IX. A standard ungated structure used in the United States that is calibrated to measure flow is shown in Figure VI-2. The orifice plate used in this structure is easily tampered as are most installations. Orifice plates have been used to some extent but their use is not recommended.

Pipe flow may be orifice flow or it may be weir flow depending in entrance and exit conditions. Pipes flowing full and existing with the water surface above the pipe exit operates as submerged orifices. Where the pipe flow is full and discharge into air it operates as an orifice with free flow. When the pipe as no longer flows full, control shift to the upstream end and it operates as weir flow. Flow through culverts in the main would be the main hydraulic structure where both flow types would occur. Culverts can be calibrated to measure flow rates. Pipe outlets are usually set low enough to act as orifices.

Sluice gates and head regulator gates are the main application of orifice flow in large canals system that can be used to measure flow rates. Gates are either vertical or occasionally radial when used within canal systems. Gates mounted on diversion structures/barrages may have other shapes. Vertical lift gates are the primary form used in Pakistan although many different hoists and configurations are used. The hydraulics of gated flow is presented in detail in Section 5.

Section 5: Flow Under a Slide Gate

A. General

Vertical lift gates are simple rectangular gates of wood or steel spanning between piers or gate structure walls depending on size and number of gates. The gates move vertically in slots in the piers. The larger gates are mounted on rollers to reduce the friction caused by the hydrostatic force on the gate. The medium and small gates are usually seated against a metal frame to minimize leakage. All but the small gates must be hoisted at a uniform rate at both ends which must carry the entire weight of the suspended gate. The medium size gates use a geared screw lift whereas the large gates will use cables or even chains. Piers or gate slots must be extended to a considerable height above the water surface to provide guide slots for the gate in the fully raised position. Small gates are equipped with a single screw lift and hand wheel. Gates may be mounted in slots but often the guide frames are mounted on the face of a head wall.

There are six flow regimes which may occur at a vertical gate control structure depending on the design:

(1) free orifice flow,
(2) submerged orifice flow,
(3) free weir flow,
(4) submerged weir flow,
(5) free flow over closed gate, and
(6) submerged flow over closed gate.

The last two conditions seldom occur and would not be calibrated.

Water control structures located in canals are either built with a flat bottom or incorporate a drop downstream of the gate. The latter case would normally allow free flow conditions to exist throughout the flow range.

When the lower edge of the raised gate is less than 2/3 of the upstream head, orifice flow occurs. The orifice flow is free if the tailwater is below the lower edge of the gate leaf; the orifice flow is submerged if the tailwater is above the lower edge. If the lower edge of the raised gate is greater than 2/3 of the upstream head weir flow will exist.

B. Gate Controlled Flow

Flow below a vertical lift gate (sluice gate) is a special case of orifice flow. Depending on the configuration of the control structure, one or more sides will be suppressed. In some situations, the velocity of approach may not be negligible. In most instances in irrigation systems the flow conditions will submerged with gate control of the upstream water surface elevation (level).

It is important to note that unlike true orifice flow, the depth of water both upstream and downstream of the gate opening is measured from the gate sill as shown on Figure VI-3.

The free discharge below a vertical sluice gate, as shown on Figure VI-3, is a function of the upstream water depth, gate opening and gate width:

$$Q = C_d C_v wb [2g (y_1 - y)]^{0.5} \quad (6.5)$$

where y = depth of flow at the vena contracta. Introducing the ratios $n = y_1/b$ and $C_c = y/b$ where C_d is the contraction coefficient Equation 6.5 may be written:

$$Q = C_d C_v wb^{1.5} [2g (n - n C_c)]^{0.5} \quad (6.6)$$

which may be simplified to

$$Q = Kwb^{1.5} (2g)^{0.5} = Ab^{0.5} K (2g)^{0.5} \quad (6.7)$$

where K is a function of the ratio $n = y_1/b$ as shown in Table VI-1.

The values shown in Table VI-1 are for a discharge per unit width based on model studies. Therefore, entrance effects, roughness etc. are not included.

For design of structures sufficient accuracy may be obtained if the following interpolations are used for the contraction coefficient.

$C_c = 0.63$ for $n = 2$
$C_c = 0.625$ for $n = 3$
$C_c = 0.62$ for $n = 10$

and for the discharge coefficient:

$C_d = 0.60$ for $1.5 < n > 3.5$
$C_d = 0.605$ for $3.5 < n > 5.0$
$C_d = 0.61$ for $n > 5.0$

All field installations must be calibrated as constructed.

The basic head discharge equations for submerged flow under a vertical lift gate is:

$$Q = C_d C_v bw [2g (h_1 - h_2)]^{0.5} \quad (6.8)$$

where h_1 is the upstream water depth and h_2 is the downstream depth measure from the gate sill as shown on Figure VI-3.

The coefficient C_v is used to correct the discharge coefficient C_d for neglecting the velocity head $V_1^2/2g$ in the approach channel. Generally, the approach velocity coefficient is defined as

714

$$C_v = [\frac{H_1}{h_1}]^u \quad (6.9)$$

where u equals the power of h_1 in the head discharge equation, being 0.5 for an orifice. Thus, C_v is greater than unity and is related to the shape of the approach channel section and to the power of h_1.

Values of C_v as a function of the area ratio $C_d A^*/A_1$ are shown in Figure VI-4, where A^* equals the imaginary area for the control section if we assume that the water depth is h_1; A_1 equals the wetted area at the head measurement section and C_d is the discharge coefficient. Since it is common practice to measure h_1 in the field instead of H_1 a positive correction should be made on h_1 to find the true C_d.

In many cases, the value of C_v is assumed to be 1.0 and the calibrated value of C_d includes any affects of the approach velocity.

An alternative method is often used for design purposes that has been determined experimentally which allows a single equation to be used to determine the discharge for both free and submerged conditions. The generalized equation is given as:

$$Q = C_g A (2g y_1)^{0.5} \quad (6.10)$$

Experimental values of the gate discharge coefficient, C_g, were prepared by Henry, 1950 and are given on Figure VI-5. The influence of the approach velocity is included in the value of C_g. The value of C_g is a function of a y_1/b for both free flow and submerged flow below the sluice gate. The C_g values read from Figure VI-5 will result in considerable errors if the difference between y_1/b and y_2/b becomes small (<1.0). This condition will generally occur with small differential heads. For calibration purposes, Equation 6.8 would probably produce better results.

It should be noted that the velocity $(2g\ y_1)^{0.5}$ does not occur any where in the flow system; it simply serves as a convenient reference velocity for use in Equation 6.10.

The values of C_g are a function of the geometry of the gate structure so variations could occur between different structures within the same irrigation system. Also, flows through a sluice gate occurring at right angles to the main channel would have an additional head loss due to curvilinear flow. Therefore, it is important that discharges below sluice gates be calibrated, particularly for submerged flow conditions because field conditions may vary considerably from the model study on which the values shown on Figure VI-5 are based.

Free flow below a sluice gate occurs as long as the roller of the hydraulic jump does not submerged the section of minimum depth of the jet, which is located at a distance of

$$l = b/C_c = h_1/nC_c \qquad (6.11)$$

downstream of the face of the vertical gate. To ensure free flow, the water depth, h_2, downstream of the hydraulic jump should not exceed the alternate depth to $y = bC_c$ or according to the equation:

$$h_2/b < \frac{C_c}{2}\left\{[1+16\ (\frac{H_1}{bC_c} - 1)]^{0.5} - 1\right\} \qquad (6.12)$$

Relative numbers h_2/b worked out with the minimum contraction coefficient $C_c = 0.611$ corresponding to high values of the ratio n, are given in Figure VI-6 as a function of h_1/b.

A second alternative has also been used to evaluate flow under sluice gates. It is similar to the method using the general Equation 6.5 except that the upstream head is referenced to the center of the gate opening instead of the top of the vena contracta. The equation for free flow is modified as follows:

$$Q_f = C_{df}(wb)(2g)^{0.5}(h_u - b/2)^{0.5} \quad (6.13)$$

where

C_{df} = dimensionless coefficient of discharge including any velocity effect.

w = width of gate

b = gate openings

g = acceleration of gravity

h_u = upstream flow depth at point of measurement

The value of C_{df} is not equal to the value of C_d used in Equation 6.5 and must be determined by field calibration. The terms in Equation 6.13 are defined in Figure VI-7.

Equation 6.8 is valid for either method because the only criteria is that the upstream head, h_u, and the downstream head, h_d, are referenced to the same level as it is the difference in head that governs the discharge. Therefore, Equation 6.8 can be rewritten as

$$Q_s = C_{ds}(wb)(2g)^{0.5}(h_u - h_d)^{0.5} \quad (6.14)$$

C. Flow Without Gate Control

There may be times during the year when operations may require that the gate(s) be fully opened. This often occurs when the flow conditions in a canal are low and the available water is being rotated between various distributary canals. In this case the cross regulator gates would be opened to allow the water to pass, assuming the offtaking head regulating structures are closed, in order to minimize the upstream water level and reduce seepage losses as much as possible. Gates might also be fully open when the canal is operating at the design discharge, Q_d or a discharge up to 1.2 Q_d which may occur for short periods of time.

When gate structures are operated without gate control the hydraulics are those of a broad crested weir. In other words the flow shift from orifice flow to weir flow. The general equation for weir flow is:

222

$$Q_f = C_d\ W(h)^{1.5} \tag{6.15}$$

for free flow and

$$Q_s = Q_d\ w(nh)^{1.5} \tag{6.16}$$

or $$Q_s = C_s\ w(h_u - h_d)^a \tag{6.17}$$

for submerged flow conditions.

For design purposes, the values of n are estimated from Table VI-2 for various values of submergence ratio h_s/h_u. The geometry of the site and possibly the number of gates may affect the value of n. It should be expected that both c_d and n would have to be determined for each structure, even then the method does not provide a direct estimate of the submerged flow Q_s.

Since both h_u and h_d must be measured to determine the percentage of submergence for either equation, it is recommended that Equation 6.17 be used. A more detailed discussion on submerged weir flow conditions is presented in Chapter VII, Section 5. The recommended method therein provides an estimate of Q_s directly from $h_u - h_d$ and h_d/h_u.

D. Calibration

1. Sill Conditions

Calibration of gate structures requires a detailed knowledge of the entrance conditions and evaluation of multiple gated operations. The important entrance condition is the gate sill as it affects the determination of the sill-reference elevation and gauge zero. Gates are mounted in various ways depending on size, construction, materials used in the gate leaf as well as in location. General representative sill conditions are shown in Figure VI-8. There are bound to be many other configurations in the field depending on manufacturer.

The sill-reference height or zero datum (reference elevation) is normally set at the top of the sill or the invert of the entrance. With certain sill configuration significant flow (leakage) may occur with some vertical movement of a gate before the bottom of the gate leave is raised to or is at the zero datum. Where a flow is significant it can be compensated for by

introducing a small dimension b' the length of which has to be determined during the field calibration process.

2. Measurements

It is important to remember during calibration proceedings that the gates be operated at various openings for a more or less constant upstream stage as well as at various stages. The variations which can be accommodated at a structure or cross regulator depends on the position of the structure, inline or offtaking, as well as the number of gates.

3. Multiple Gate Conditions

On larger canal control structures, multiple gates are used. The use of several gates has the advantage of making small adjustments easier as well as reducing the overall cost of the gate installation. Structures with multiple gates present special problems when used for water measurement.

Under free flow conditions, the tailwater does not affect the discharge. The width of piers separating the gates as well as the number of gates being operated will have an effect on the discharge according to the degree the flow is suppressed. Under most operating conditions, the variation in discharge due to the influence of piers and suppressed sides on the discharge are less than what can be measured in the canal.

Under submerged operating conditions, the tailwater and the reaction of the eddies caused by energy dissipation may have a somewhat larger effect on the discharge coefficients of the gates. Careful calibration and discharge measurements will define the extent of change required. Continuous operation with the submergence ratio greater than 0.95 may require the use of a stage discharge relationship in the downstream channel rather than relying on gate openings and water levels.

TABLE VI-1

COEFFICIENTS FOR FREE FLOW BELOW A SLUICE GATE

Ratio	Contraction coefficient	Discharge coefficient	Coefficient	$K(2g)^{0.5}$
$n=y_1/b$	C_c	C_d	K	$m^{1/2}s^{-1}$
1.50	0.648	0.600	0.614	2.720
1.60	0.642	0.599	0.641	2.838
1.70	0.637	0.598	0.665	2.946
1.80	0.634	0.597	0.689	3.052
1.90	0.632	0.597	0.713	3.159
2.00	0.630	0.596	0.735	3.255
2.20	0.628	0.596	0.780	3.453
2.40	0.626	0.596	0.823	3.643
2.60	0.626	0.597	0.865	3.832
2.80	0.625	0.598	0.905	4.010
3.00	0.625	0.599	0.944	4.183
3.50	0.625	0.602	1.038	4.597
4.00	0.624	0.604	1.124	4.977
4.50	0.624	0.605	1.204	5.331
5.00	0.624	0.607	1.279	5.664

Adapted from P.G. Franke, 1968

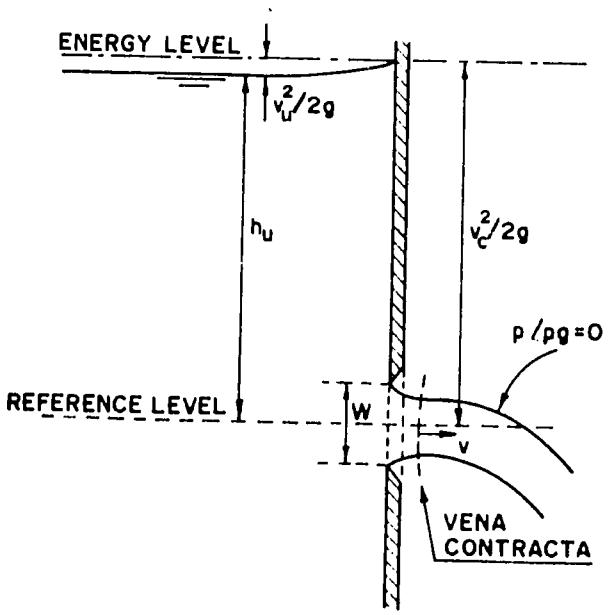

FIG. A. FREE DISCHARGING JET

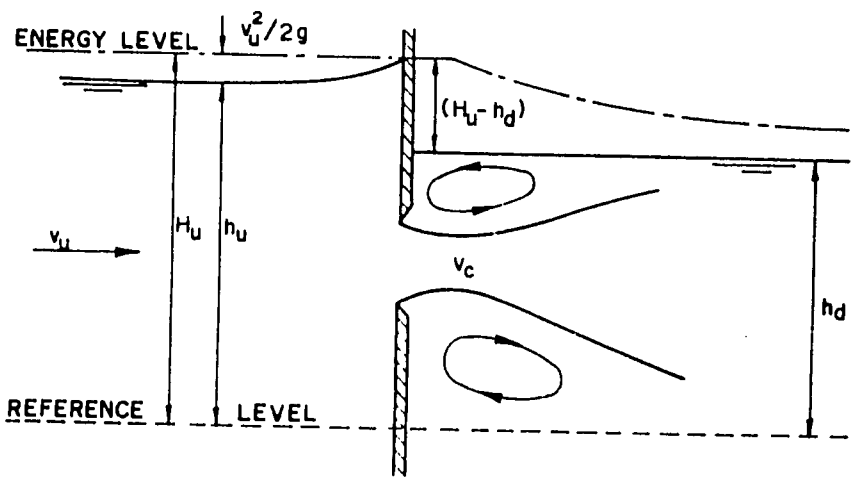

FIG.B. FLOW PATTERN THROUGH A SUBMERGED ORIFICE

DEFINITION SKETCH ORIFICE FLOW

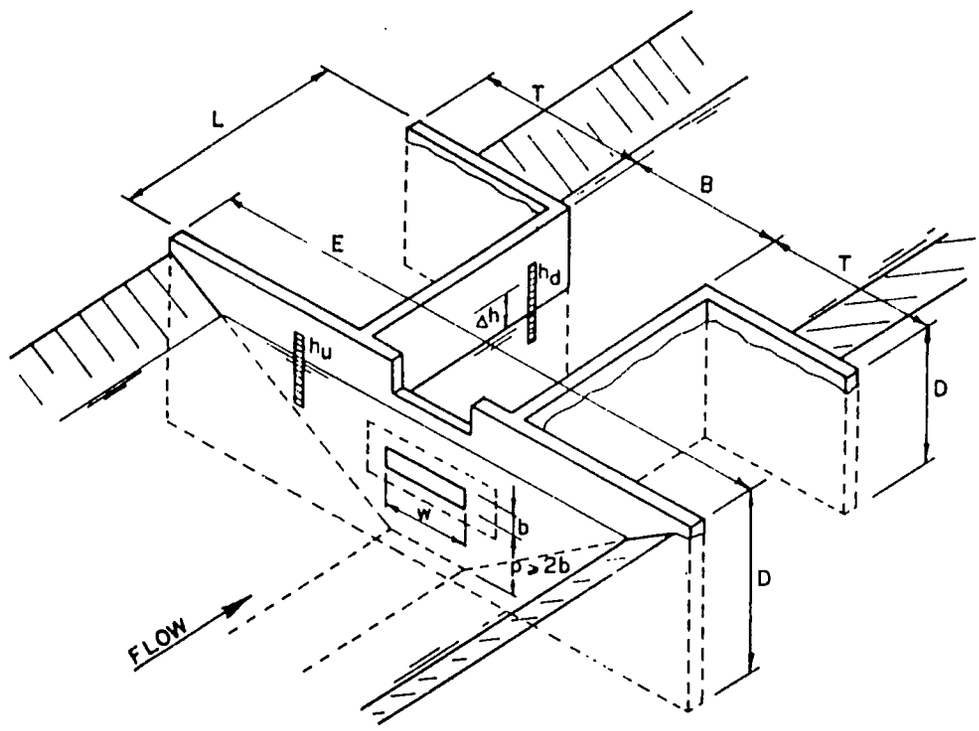

NOTE: ADAPTED FROM U.S. BUREAU OF RECLAMATION

RECOMMENDED DIMENSIONS

Orifice size height	Orifice size breadth	Height of structure	Width of head wall	Length	Width	Length of downstream head wall
b	w	D	E	L	B	T
0.08	0.30	1.20	3.00	0.90	0.75	0.60
0.08	0.60	1.20	3.60	0.90	1.05	0.60
0.15	0.30	1.50	3.60	1.05	0.75	0.90
0.15	0.45	1.50	4.25	1.05	0.90	0.90
0.15	0.60	1.50	4.25	1.05	1.05	0.90
0.23	0.40	1.80	4.25	1.05	0.90	0.90
0.23	0.60	1.80	4.90	1.05	1.05	0.90

ORIFICE BOX DIMENSIONS

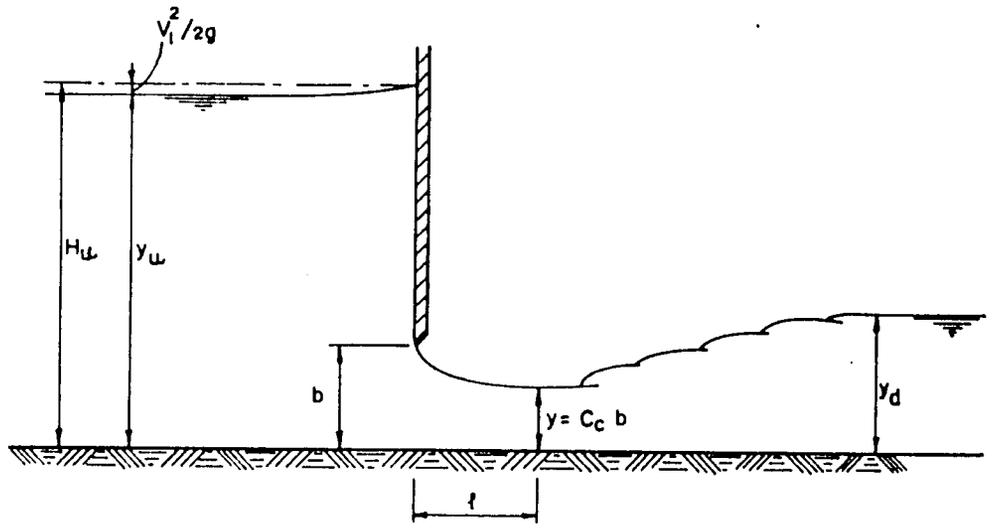

Fig. a FREE FLOW

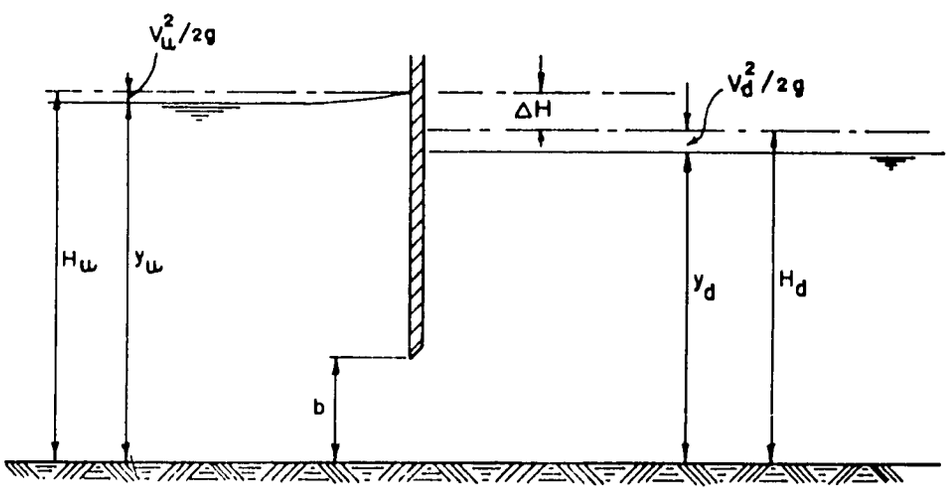

Fig. b SUBMERGED FLOW

DEFINITION SKETCH
FLOW BELOW A VERTICAL GATE

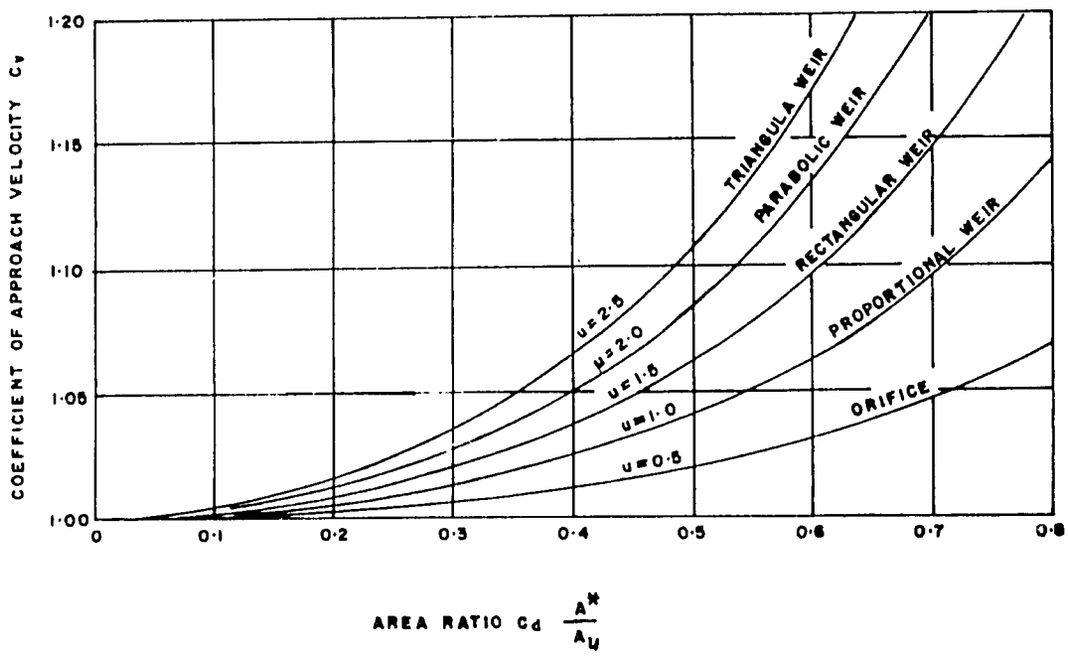

APPROACH VELOCITY COEFFICIENT
FOR
VARIOUS CONTROL SECTIONS

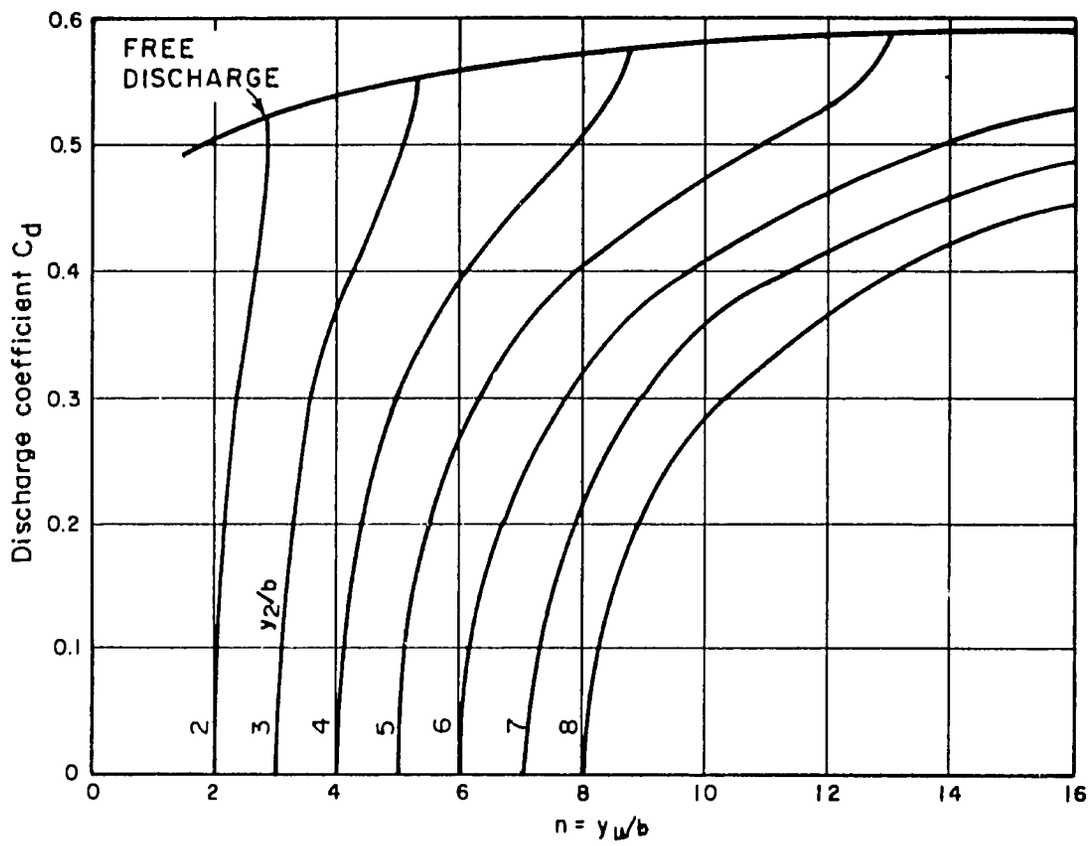

NOTE: AFTER H.R. HENRY

DISCHARGE COEFFICIENT FOR
VERTICAL LIFT GATES

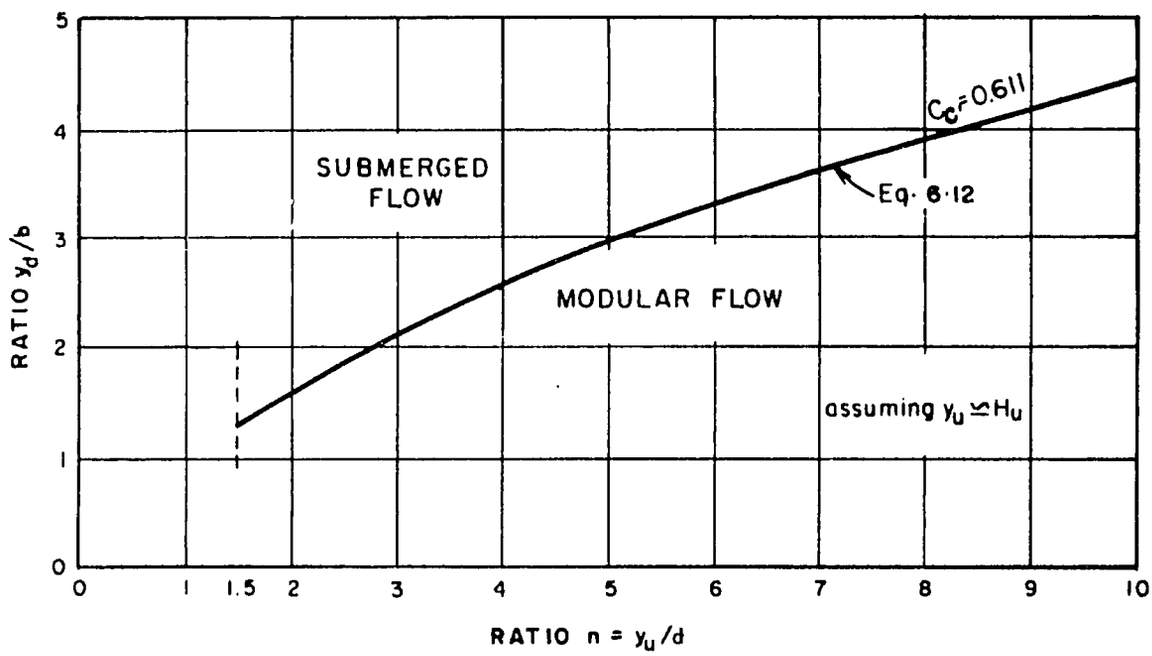

EFFECT OF TAIL-WATER LEVEL
ON MODULAR FLOW
BELOW A SLUICE GATE

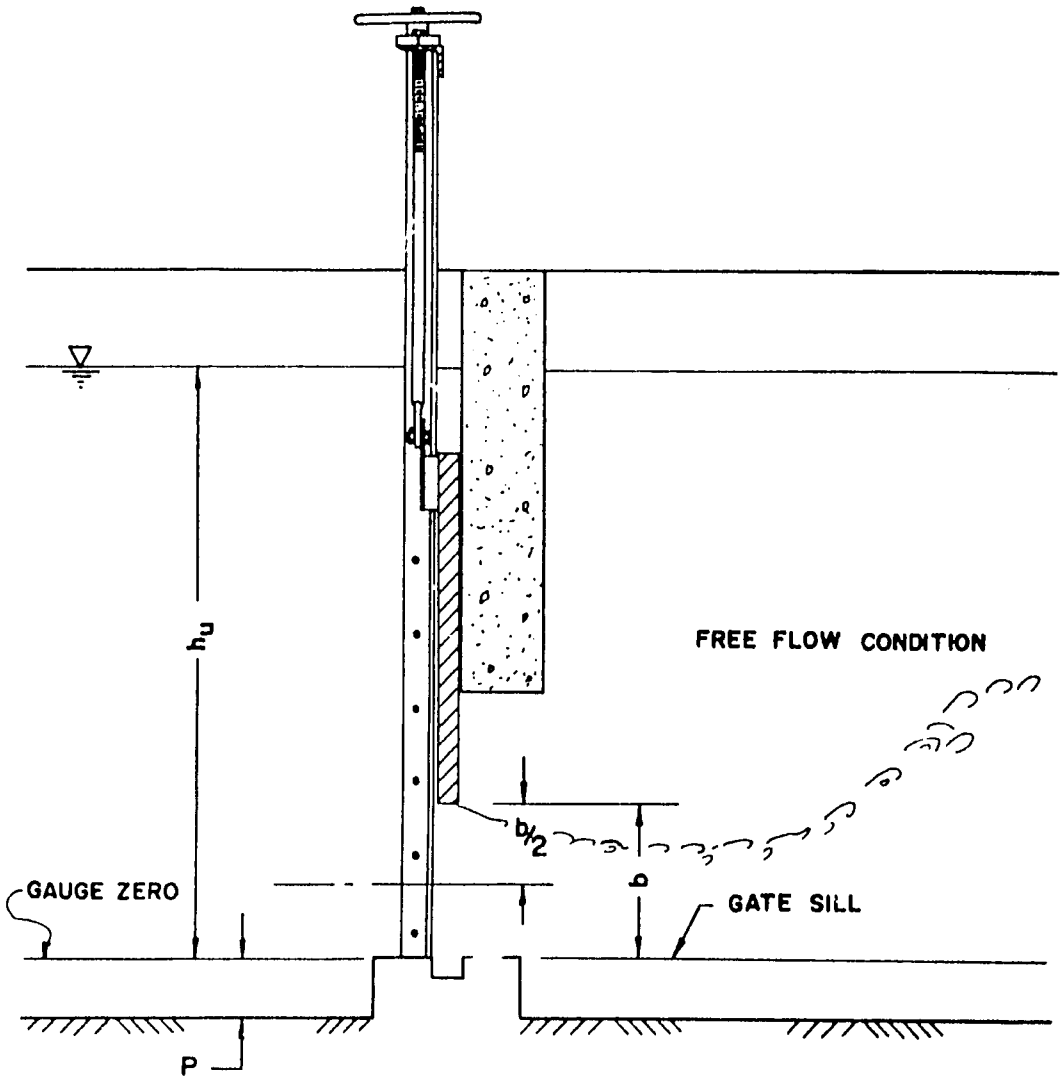

TYPICAL SECTION

DEFINITION OF TERMS
REFERENCING FREE FLOW
TO CENTER OF GATE OPENING

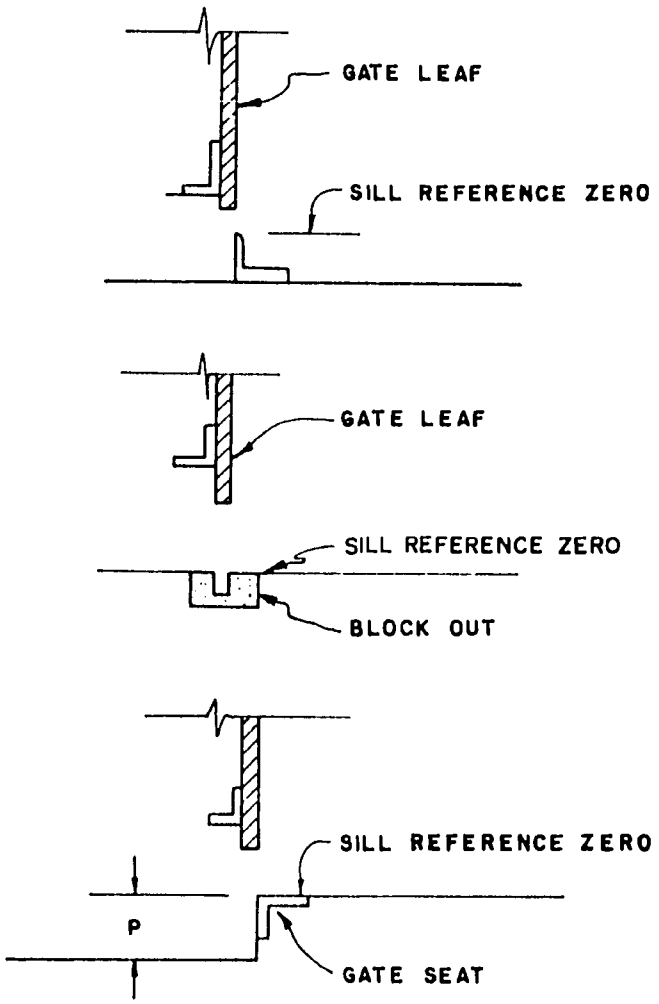

TYPICAL GATE SILL INSTALLATIONS

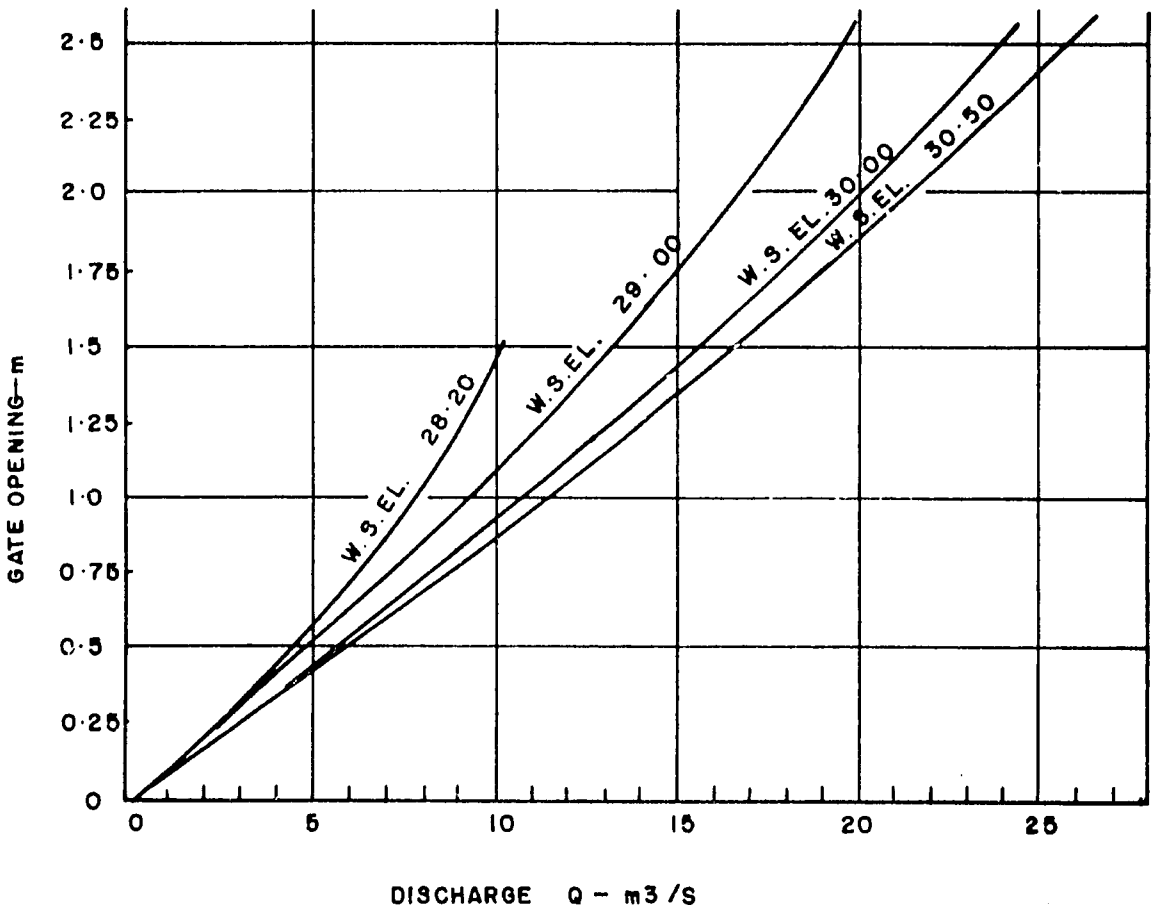

TYPICAL DISCHARGE CURVES
LARGE VERTICAL LIFT GATE

CHAPTER VII

WEIR HYDRAULICS

CHAPTER VII
WEIR HYDRAULICS

Section 1 : Introduction

Weirs are one of the oldest, simplest, and most reliable structures that can be used to measure the flow of water in canals. A weir may be defined as an overflow structure built across an open channel usually to measure the rate of flow of water. Weirs are acceptable measuring devices because for a weir of a specific size and shape with free flow steady-state conditions and a proper weir-to-pool relationship only one depth of water can exist in the upstream pool for a given discharge. The discharge rates are determined by measuring the vertical distance from the crest of the overflow portion of the weir to the water surface in the pool upstream from the crest, and referring to computations or tables which apply to the size and shape of the weir. For standard tables to apply, the weir must have a regular shape definite dimensions, and be set in a bulkhead and pool of adequate size so the system performs in a standard manner. The sill must be level. In the case of the broad crested weir the crest must be level in both directions.

There is a very large number of weir structures that have been developed all over the world to measure the flow of water. Three general classifications are given as:

* Thin-plate (sharp crested) weirs
* Short-crested weirs
* Broad-crested (long) weirs

There are a large number of individual shapes or geometric variations. Irrigation systems have used only a relative few variations of each classification. Thin-plate weirs are limited to rectangular, Cipolletti (trapezoidal) and V-notch. The short-crested are limited to weir sills of either rectangular or trapezoid control sections, stop logs, and various shaped crests for overflow spillways. The variation in broad-crested weirs is usually limited to ramp conditions and the shape of the crest.

236

Although there are relatively few weirs used for water measurements in Pakistan, there are a number of hydraulic structures that can be rated and used for water measurement that would require use of the general weir equations with calibrated discharge coefficients.

The cross-sectional shape of earthen irrigation canals can vary widely. Generally, they are shallower and wider than lined canals. Because of this wide variety of possible shapes for unlined channels and related range of flows to be measured, a rectangular control section is used because the width can readily be fixed. The complete structure should contain the following parts: entrance to approach channel, approach channel, conveying transition, throat, diverging transition, stilling basin, and downstream riprap protection. The purpose of the approach channel, Figure IV-1, is to provide a known flow area and velocity of approach. The rating table for each rectangular weir depends on the relationship of approach section of that of the throat; for example a rectangular approach section of the same width as the throat. With the rectangular approach section the sill-reference head is measured in the approach section as shown in Figure IV-1. When the sill-reference head, h_u, is not measured in a rectangular approach channel but in the wider earthen section, it causes an error in discharge if the rating table is not adjusted. The adjustment in the approach velocity coefficient, C_v, varies with the velocity head $V_u^2/2g$, which is dependent on the width of the approach channel. Therefore, each weir would have to have its own special rating curve.

Where is weir structure has been shortened by deleting the diverging transition the available head loss over the weir must exceed 0.4 H_u so that no velocity head needs to be recovered. If the head loss is less than 0.4 H_u then the weir is operating under a non-modular or submerged condition and the free flow discharge table cannot be used (it would provide the wrong discharge).

B. <u>Staff Gauge Setting</u>

The accurate determination of the sill-referenced head, h_u, is the most important factor in obtaining accurate discharge measurements. As discussed

in Chapter IV, it is absolutely necessary to accurately place the staff gauge so that the gauge zero is level with the weir crest.

The staff gauge is located at a distance of 3 to 4 times the sill-referenced energy head H_u upstream of the thin-plate weir as shown in Figure IV-1. The location of the staff gauge for a broad-crested weir is 2 to 3 times the upstream of the converging transition section as shown in Figure IV-1. The staff gauge is normally mounted on the structural wall or in a stilling well. Chapter IV provides details on locating and mounting staff gauges.

C. Recording Flows

The staff gauge reading must be recorded immediately and then converted to a discharge using the discharge table supplied for the weir.

D. Calibration Check

The zero setting and crest elevation should be surveyed and checked each year. This should be done in conjunction with the structural inspection, as a part of the annual maintenance program.

The weir should also have a current meter calibration check made annually to ascertain that there has been no change in the stage-discharge relationship. Where sedimentation appears to be a problem, current meter checks must be made more often to assure an accurate stage-discharge relation. When sedimentation indicates a change, the weir must be re-rated and a new accurate discharge table prepared.

Section 2 : Thin-plate Weirs

The surface of the weir over which the water flows is the crest of the weir. A thin-plate weir has its crest beveled to a chisel edge and is always installed with the beveled face on the downstream side. The crest shape is defined in Figure VII-1. The crest of a thin-plate weir is highly susceptible to damage by debris or tampering. Thin-plate weirs have several commonly used shapes; rectangular, trapezoidal and triangular or V-notch.

Thin-plate weirs are generally used where high accuracy is desired and adequate maintenance can be provided. Retrofitting a weir will require the canal banks to be raised as the weir will require considerable head loss if modular flow is to be maintained. Thin-plate weirs are not satisfactory for inline use in canals carrying sediment laden water because they trap sediment and thereby cause the gauge pool to fill with sediment. The change in pool depth, p, below the weir crest changes the stage discharge relation.

A. Rectangular Thin-plate Weir

Flow over a rectangular thin-plate weir is shown in Figure VII-1. The discharge equation for this type of weir is:

$$Q = C_d \, w \, (h_u)^{3/2} \qquad (7.1)$$

Where
- Q = discharge
- C_d = discharge coefficient
- w = length of weir crest normal to flow
- h_u = sill-reference head on weir crest.

Laboratory investigations show that the coefficient for free discharge is a function of certain dimensionless ratios which describe the geometry of the channel and the weir as follows:

- h_u/p = velocity of approach factor
- p = distance from weir crest to upstream pool bed levels
- w/W = side contractions
- W = upstream pool width, and
- E = slope of weir face.

The relation between C_d, h_u/p and E for weirs with no side contraction ($w/W = 1.0$) is shown in Figure VII-2. The value of the h_u/p has been given for 0 to 5. The value of this coefficient becomes uncertain at high h_u/p values because it represents a high velocity of approach condition. In a high velocity approach condition the control section will shift upstream causing changes in the discharge relation. It is important to note that C_d has units

239

and is not dimensionless. Therefore, all values of C_d must be multiplied by the factor 0.552 to convert it for use in the metric system of units.

Side contractions reduce the effective length of the weir crest. That effect is accounted for by multiplying the value C_d from Figure VII-3 by a correction factor that is a function of w/W, h_u/p and degree of rounding of the vertical edge of the weir notch abutments. Rounding is a factor only in the situation where the horizontal weir is set between vertical abutments. For a rectangular thin-plate weir with sharp edged entry, the correction factor is K_c; appropriate values of K_c are obtained from the curves in Figure VII-3. For a rectangular thin-plate weir having vertical abutments rounded with radius r, the correction factor, when $r/w \geq 0.12$ is assumed to equal $(1 + K_c)/2$ where again K_c is read from Figure VII-3. For rounded abutments having a lesser value of r/w the correction factor is obtained by interpolating between the appropriate K_c value from Figure VII-3 and the value $(1 + k_c)/2$. In other words, for given values of w/W, h_u/p and r/w between 0 and 0.12 interpolate linearly between the value of K_c (corresponding to r/w = 0) and the value of $(1 + K_c)/2$ (corresponding to r/w = 0.12).

B. **Trapezoidal Thin-plate Weir**

The vertical Cipolletti weir, which is a sharp-crested trapezoidal where the sides have a slope of 0.25 horizontal to 1 vertical is the only trapezoidal weir used in irrigation. The slope of the sides is approximately that required to obtain a discharge through the two triangular parts of the weir opening that equals the decrease in discharge resulting from end contractions. In other words, the Cipolletti weir acts as a rectangular thin-plate weir whose crest length is equal to w and whose contraction coefficient, K_c, is equal to 1.0. The pool dimension W for a Cipolletti weir has little bearing on the discharge. Therefore, Equation 7.1 is used with close approximation of values of C_d are obtained from Figure VII-2. The head, h_u, and the height of notch above the bed level, p, are both measured in the approach section.

C. **Triangular or V-notch Thin-plate Weir**

Triangular thin-plate weirs are installed at sites where low discharges occur; they are highly sensitive to low flows but have less capacity than rectangular

weirs. They are very seldom used in irrigation except in research studies. The approach velocity can usually by neglected but depends on the relative size of the areas occupied by the water in the notch and the water in the approach section.

The general equation for a sharp crested V-notch weir is

$$Q = C_d (h_u)^{2.5} \quad \text{(English units)} \tag{7.2}$$

The value of C_d can be closely approximated by $C_d = 2.5 (\tan \theta/2)$ in English units where the value in central angle θ is measured as shown in Figure VII-4. As with all weirs the entrance geometry will affect the value of C_d. The effects of h_u/p and p/W are shown in Figure VII-4B. A V-notch weirs are most commonly built with a central angle of 90°. Therefore, considerable experimental work has been done with thin-plate 90° V-notches and the discharge equation usually recommended in the USA is:

$$Q = 2.47 (h_u)^{2.5} \quad \text{(English Units)} \tag{7.3}$$

Metric units require the multiplication of C_d by 0.552.

D. <u>Submerged Flow Conditions</u>

Submergence occurs at a weir when the elevation of the downstream water surface (tailwater) exceeds the elevation of the weir crest to the point when it causes a reduction in the velocity over the control section such that it is less than critical. With submerged flow conditions the tailwater elevation must be measured at a point downstream from the turbulence that occurs in the immediate vicinity of the downstream face of the weir. The degree of submergence, S, is expressed by the ratio h_u/h_d where h_d is the downstream depth of water above the sill crest. For any given head h_u, submergence has the effect of reducing the discharge that would occur under the condition of free flow; the greater the submergence ratio, S, the greater the reduction in discharge. The establishment of ratings for submerged flow is covered in detail in Section 5 below.

Section 3 : Short Crested Weir

A. General

In general, short crested weirs are those overflow structures, in which the stream line curvature above the weir crest has a significant influence on the head discharge relation of the structure. There are a large number of this type of structure each with a different crest shape. A representative group are:

(1) Weir sill with rectangular control section
(2) V-notch weir sill
(3) Triangular profile two-dimensional weir
(4) Triangular profile flat V weir
(5) WES - Standard spillway
(6) Cylindrical crested weir
(7) Trenton type control weir
(8) Columbus type control weir

Only two of these structures are discussed herein because of their applicability to irrigation systems. There are many non standard or standard water control structures that have conditions that approximate those found in 1 and 6 above. Therefore, although the discharge coefficients might vary somewhat the general form would be similar to those obtained from field calibration.

B. Weir Sill With Rectangular Control

A common and simple water control structure used in canals as either a check or drop structure is the concrete rectangular control shown in Figure VII-5. The control is placed in either a trapezoidal or rectangular approach channel, the bottom of which has the same elevation as the weir crest ($p = 0$). The upstream head on the weir crest h_u is measured a distance of 6.0 ft (1.8 m) from the downstream weir face. To prevent a significant change in the roughness or configuration of the approach channel boundary from influencing the weir discharge, the approach channel should be lined with concrete or masonry for about 6.5 feet immediately upstream of the weir.

The crest surface and sides of the notch should have plain surface which make sharp 90° intersections with the upstream weir face. These sharp edges may be reinforced by a non-corrodible angle iron. If a moveable gate is required on the (check) structure, the groves should be located at the downstream side of the weir and should not interfere with the flow pattern through the control section.

The basic head discharge equation for short crested weir with rectangular control is

$$Q = C_d \, 2/3 \, (2/3g)^{0.5} \, w(h_u)^{1.5} \qquad (7.4)$$

Where the effective discharge coefficient C_d equals the product C_a C_v value of the discharge coefficient C_a may be obtained from Figure VII-6 as a function of the dimensionless ratios w/h_u and L/h_u for a trapezoidal channel section with a bottom width equal to 1.25 w. Values of the approach velocity coefficient C_v can be read as a function of C_d A^*/A_u in Figure VI-4, where $A^* = w\ h_u$. The recommended lower limit of h_u is 0.3 foot. To maintain modular flow, the submergence ratio h_d/h_u should not exceed 0.20.

There are many variations of the structure shown in Figure VII-5. The installation of a gate or a stoplog would be the most common. Another would be the elimination of the drop which would be a condition found in a gated structure with the gate removed so as to preclude orifice flow. In all non standard situations the value of C_d would vary with the geometry and flow pattern. Calibration would be required to determine the appropriate discharge coefficients over the full range of flow conditions. In that case a composite C_d value equivalent to the expression C_a C_v 2/3 $(2/3g)^{0.5}$ in Equation 7.4 would be determined.

C. Cylindrical Crested Weir

A cylindrical crested weir is any overflow spill way structure with a rather high discharge coefficient. The weir consists of a vertical face, a cylindrical crest and a downstream slope of 1:1 (45° angle) as shown in Figure VII-7. The abutments are vertical and should be shaped in such a manner that

separation of flow does not occur. Equation 7.4 is applicable, but in this case, where the effective discharge coefficient C_d equal the product of C_o (which is a function of H_u/r, of C_1 (which is a function of p/H_u), and C_2 (which is a function of p/H_u and the slope of the upstream weir face) ($C_d = C_o\ C_1\ C_2$).

The value of C_o is obtained from Figure VII-8A. The value of C_o is 1.49 if H_u/r exceeds 5.0 as shown in Figure VII-8A. The C_o valves are valid if the weir crest is sufficiently high above the average bed of the approach channel ($p/H_u \geq 1.5$). If p approaches zero, the weir will perform as a broad crested weir and have a C_o value of about 0.98 which corresponds to a discharge coefficient reduction factor, C_1 of 0.98/1.49 or about 0.66. Values of the reduction factor as a function of p/H_u can be read from Figure VII-8B. The correction factor far a sloping upstream weir face can be read from Figure VII-9B.

There have been a large number of overflow spillway crest designs made over the years. The majority have two main criteria; (1) reduce the negative pressures that can develop on the crest to a maximum of 13 feet (4.0 m) of water and (2) to design a shape that is easily constructed in the field. The negative (sub-atmospheric) pressure will cause an increase in the discharge coefficient. This will occur when the ratio H_u/r becomes large because the position of the overfall nappe becomes depressed.

The procedure for evaluating the discharge coefficients for rating any spillway is the same. Only the design parameters vary somewhat with the geometry.

Section 4 : Broad Crested Weirs

A. General

The term broad crested weir, as used here, refers to a weir with a significant length in the direction of flow. A weir is formed when the control section is essentially formed by raising the channel bottom to obtain critical flow. The control shape most often used in canals is either rectangular of trapezoidal.

244

Other shapes are sometimes used in gauging stations measuring natural stream flows because the range of flows is greater. Rectangular control is usually installed in unlined canals and trapezoidal in lined canals. Trapezoidal control sections have a slightly higher modular limit than rectangular.

When installed in canals, the weir is often built with a gently sloping upstream apron. The apron serves two purposes; (1) there is no abrupt impediment to the flow and sediment is carried over the weir and not deposited in the pool, and (2) results in a higher discharge coefficient. Because the weir will cause the upstream water level to be increased, the weir crest is kept as low as possible. This means it may become submerged at high flows. The latter can become a problem where flows greater than the design flow are allowed into a canal.

The addition of a downstream apron to the weir allows more of the potential energy of the water to be recovered and the modular limit is increased before submergence affects the flow moving over the crest. Submergence will also cause the upstream water surface level to rise over that if free flow was to exist because submergence reduces the velocity over the crest.

All broad crested weirs should be field calibrated by current meter discharge measurements.

Generally with broad crested weirs the stream lines should run parallel to each other, at least over a short distance in the control section. To obtain this condition, the length in the direction of flow of the weir crest, L, is restricted by the total upstream sill-referenced energy head H_u.

B. <u>Head Discharge Equation</u>

The general equation for a broad crested weir that is rectangular and horizontal in both directions with a width w and length L is:

$$Q = C_d \, C_v \, 2/3 \, (2/3g)^{0.5} \, w(h_u)^{1.5} \qquad (7.5)$$

with the terms as defined previously.

245

The value of C_d will include the velocity of approach correction factor unless C_v is specifically computed. This allows the stage or sill-reference head to be used to determine the discharge.

The discharge coefficient C_d will increase with an increase in the upstream water level h_u in the manner shown in Figure VII-10. It also shown the effects of the slopping upstream apron. The value of C_d is also affected by the ratio H_u/L due to the energy lost in crossing the crest. The values of the discharge coefficient C_d are closely related to H_u/L as illustrated in Figure VII-10. The range of application is

$$0.1 \leq H_u/L \leq 1.0$$

The approach velocity correction factor can be determined from Figure VI-4 because the use of A^* in the area ratio, the C_v value is almost the same for all control shapes.

The rating curve for a broad crested weir rectangular when plotted on logarithmic graph paper will be a straight line except for extremely low stages. The equation will be of the form $Q = p\ (G - e)^a$, where the slope of the line a, will have a valve greater than 1.5 because both the weir coefficient C_d and the velocity head increase with stage.

Little quantitative data are available to define the relation of discharge ratio to submergence ratio for the many types of broad crested weir. For horizontal crests the submergence ratio must be appreciable before any significant reduction in discharge occurs. The threshold value of the submergence ratio at which the discharge is first affected, ranges from about 0.65 to 0.85 depending on the cross-sectional shape of the weir.

Section 5 : Submerged Flow

A. Introduction

The two most significant flow regimes under which any open channel construction may operate are free flow and submerged flow. The distinguishing difference between the two flow conditions is the occurrence of critical velocity in the vicinity of the control section. When this critical flow control occurs, the flow is uniquely related to the sill-reference depth or "head" upstream of the control section. Thus, measurement of a flow depth at some specified location upstream, h_u, from the control section is all that is necessary to obtain the free flow discharge.

Therefore, the free flow discharge is a function of h_u:

$$Q_f = f(h_u)^a \tag{7.6}$$

When the flow conditions are such that the downstream flow depth is raised to the extent that the flow velocity at every point through the constriction becomes less than the critical value, then the constriction is operating under submerged flow conditions. With this flow regime, an increase in tailwater flow depth h'_d, will increase the head upstream of the construction by h'_u (h'_u will be less than h'_d). A construction operating under submerged flow conditions requires that both upstream depth, h_u, and downstream depth, h_d, be measured. The definition given to submergence, S, is:

$$S = h_d/h_u \tag{7.7}$$

and may be represented in percent. The submerged flow discharge, Q_s, is a function of h_u and h_d, generally written as a relation between flow rate, head loss ($h_u - h_d$), and submergence:

$$Q_s = f(h_u, h_d) = f(h_h - h_d, S) \tag{7.8}$$

Offtimes hydraulic structures are designed initially to operate under free flow conditions become submerged in response to unusual operating conditions or

247

or the accumulation of moss and vegetation in the canal. Care should always be taken to note the operating condition of the structure in order to determine which rating should be used. The value of submergence marking the change from free flow to submerged flow, or vice versa, is referred to as the transition submergence, S_t. At this condition, the discharge given by the free flow equation is exactly the same as that given by the submerged flow equation. Hence, if discharge equations are known for both the free flow and submerged flow conditions, a definite value of the transition submergence can be obtained by setting the equations equal to one another and solving for S_t. It should be noted that this derived value of S_t is highly sensitive to slight errors in the coefficients or exponents of either equation.

Free flow will exist until $h_d/h_u = S_t$ and the depth h_u is unaffected by h_d. For a structure in the line of flow under submerged flow conditions an increase in the tailwater depth will also cause an increase in flow depth at the upstream station. In an offtaking structure where the upstream head remains constant, the increased in tailwater depth will reduce the incoming flow.

B. Methods of Analysis

There are two generally accepted methods used in submerged flow analysis; two dimensional and three dimensional. The two dimensional approach uses two ratios to determine a curve on rectangular coordinates. The curve defines a correction factor based on the submergence S_t. Therefore, the submerged discharge Q_s is not read directly but must be computed.

The three dimensional approach allows the evaluation of Equation 7.8 so that the submerged flow, Q_s, is determined directly.

1. Two Dimensional Analysis

One of the two dimensional approaches to submerged flow analysis is composed of three flow quantities; discharge, upstream depth and downstream depth that are combined in such a way that only two dimensionless parameters are used. The Q_s/Q_f ratio is plotted as the ordinate and the

submergence $S = h_d/h_u$ is plotted as the abscissa. The term correction factor is sometimes used for the ratio Q_s/Q_f.

There is considerable scatter in the plotted data used to develop the discharge correction curves. The major difficulty is in the correct placement of the curve. As would be expected, the variation in geometry between individual weirs and types of weirs is considerable, see Figure VII-11. Even with the same type of weir the degree of contraction, side wall slope, length of throat, non horizontal crest and possibly crest length all affect the transition submergence. Hence, any change in geometry from design to construction (As-built) will change the placement of the curve in either direction; up or down or left to right. Sedimentation would also cause a shift.

A modification of the above, is to use the discharge ratio Q_s/Q_c where Q_c is the critical flow discharge based on the value of h_u which has been increased above that of free flow by submergence. The value of $Q_s/Q_c = 1.0$ is equivalent to the transition submergence, S_t and free flow would exist for any value of h_d/h_u less than that for $Q_s/Q_c = 1.0$. The plotting points also affect this method to a considerable degree.

2. <u>Three Dimensional Analysis</u>

The three dimensional analysis is a calibration curve consisting of a family of lines of constant submergence. The calibration curves are obtained by plotting three dimensionally on logarithmic paper the discharge, Q_s, as the ordinate, difference between the upstream and downstream sill-referenced depths $(h_u - h_d)$, and submergence, $S = h_d/h_u$, as the varying parameter. Essentially such plots are the graphical representation of the submergence equation:

$$Q_s = \frac{C_s (h_u - h_d)^a}{(\log S + C_2)^b} \qquad (7.9)$$

Where the subscript s denotes submerged flow, so that Q_s is the submerged flow discharge rate, C_s is the submerged flow discharge coefficient and "b" is

the submerged flow exponent. The theoretical variation of "b" is between 1.0 and 1.5 (Skogerboe and Hyatt, 1967). Note that the free flow exponent "a" is used with the term $(h_u - h_d)$. Consequently "a" is determined from the free flow rating while C_s and b must be evaluated using submerged flow data.

The evaluation is made by drawing straight lines through the data points with a slope "a". These lines can be extended to the ordinate $(h_u - h_d) = 1.0$ and the corresponding values of discharge can be read and listed as $Q_{dh} = 1.0$. The value of $Q_{dh = 1.0}$ can be solved analytically because the straight line on logarithmic paper is a power function having the simple form:

$$Q_s = Q_{dh = 1.0} = (h_u - h_d)^a \tag{7.10}$$

or:

$$Q_{dh = 1.0} = \frac{Q_s}{(h_u - h_d)^a} \tag{7.11}$$

where $Q_{dh = 1.0}$ has a different values for each value of the submergence S.

Using the term $Q_{dh = 1.0}$ implies that $(h_u - h_d) = 1.0$ by definition, so that Equation 7.9 reduces to:

$$Q_{dh = 1.0} = \frac{C_s}{-(\log S + C_2)^b} = C_s -(\log S + C_2)^{-b} \tag{7.12}$$

Again this is a power function where $Q_{dh = 1.0}$ can be plotted against $-(\log S + C_2)$ or logarithmic paper to yield a straight line relationship.

The value of C_2 is zero for structures where there is an apron to allow the recovery of kinetic energy and a relatively high value of transition submergence. Sharp crested weirs and spillway crests will have values for C_2. The transition submergence S_t is found by setting Equation 7.9 equal to Equation 7.6 and substituting S_t for S and solving by trial and elimination.

250

Section 6: Field Calibration

All water measuring structures should be field calibrated to determine the effective discharge coefficients that actually govern the flow through the structure. All water control structures in a canal system should be rated in order to provide the canal officers with more information on the distribution of flow throughout the system as discussed in detail in Chapter III.

Field calibration of a hydraulic structure will allow the determination of the effective discharge coefficients for the structure. This calibrated C_d will incorporate all of the geometric and approach velocity effects for that particular structure. The water detailed discussions presented in Section 2 through 5 have been presented to provide the canal officer with the background information on why there is considerable variation in the C_d values for each structure depending on the sill-reference head h_u and between structures. It was also prepared in order to show that the design C_d values prepared or used by the design engineer are only good estimates and what exists in the field will differ to some degree. Since the discharge is a function of h_u raised to a power and the C_d also varies with h_u, small errors in C_d will mean larger errors in measured discharges. Equitable distribution of water requires accurate water measurements.

The canal officer is again cautioned to take care that those performing the field calibration are instructed to be extremely careful in making exact measurements and recording them correctly. Structural dimensions and canal stages must be measured carefully.

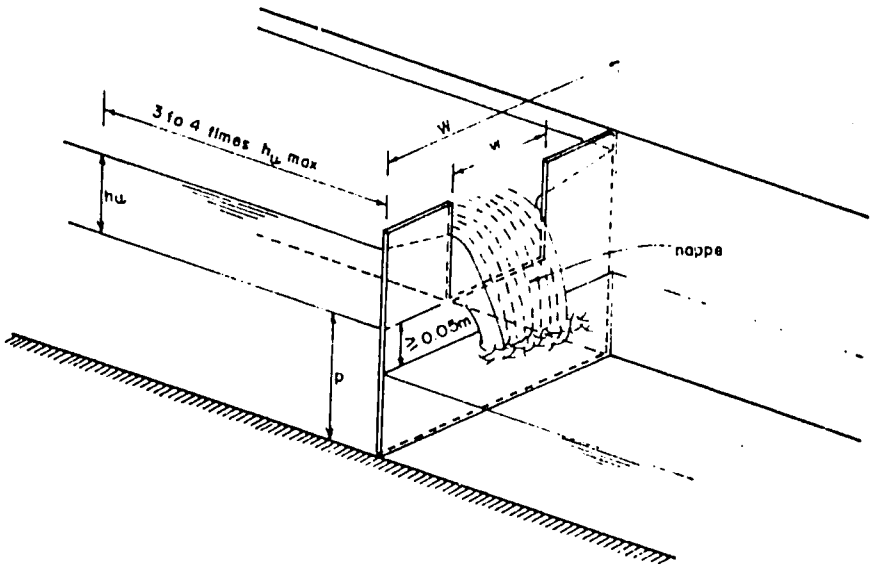

(A) RECTANGULAR SHARP-CRESTED WEIR

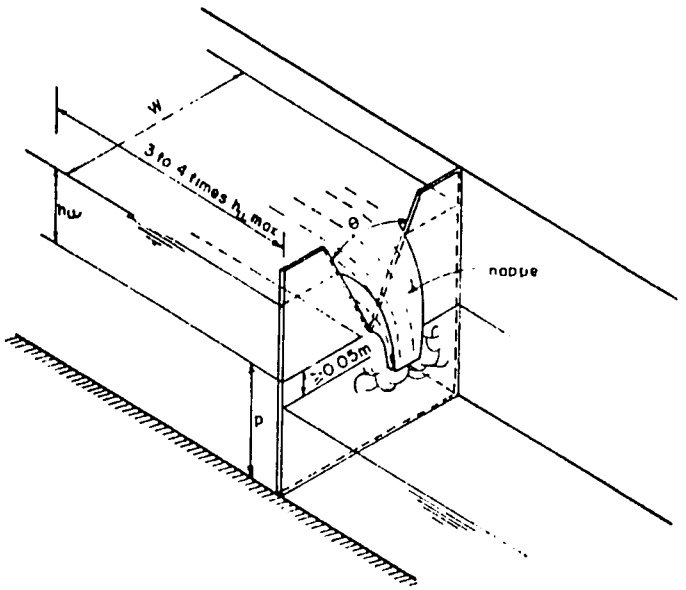

(B) V-NOTCH SHARP-CRESTED WEIR.

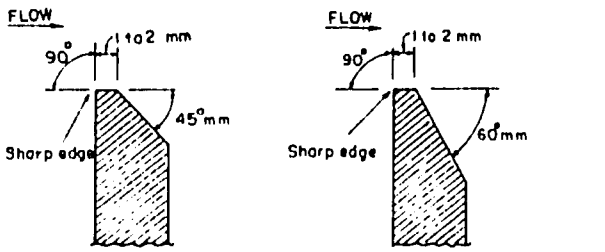

RECTANGULAR NOTCH TRAPEZOIDAL AND CIRCULAR WEIRS

V-NOTCH AND SUTRO WEIRS

(C) STANDERED CREST SHAPES

ILLUSTRATION OF TERMS
THIN-PLATE WEIR

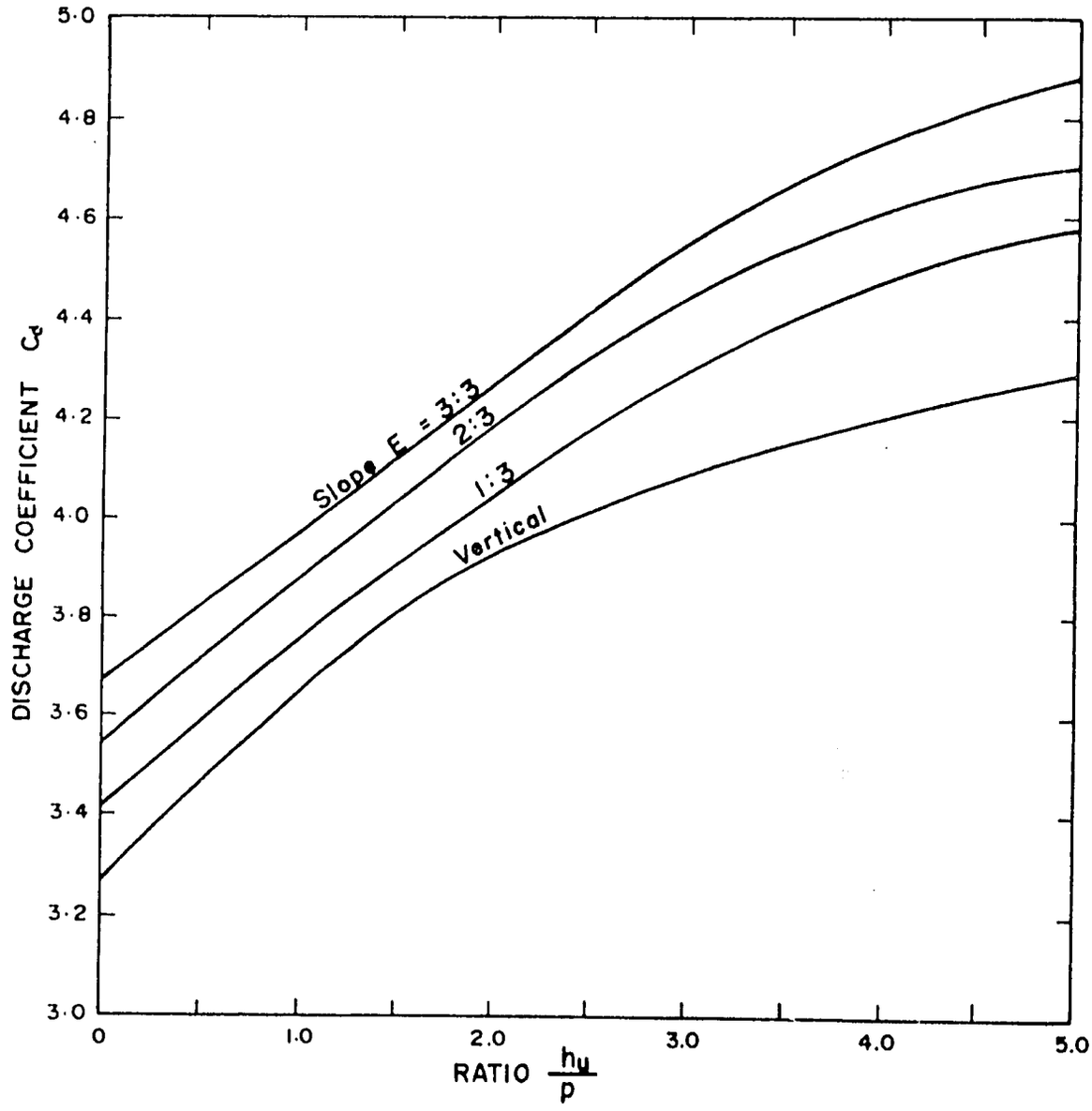

DISCHARGE COEFFICIENTS
RECTANGULAR THIN – PLATE WEIRS

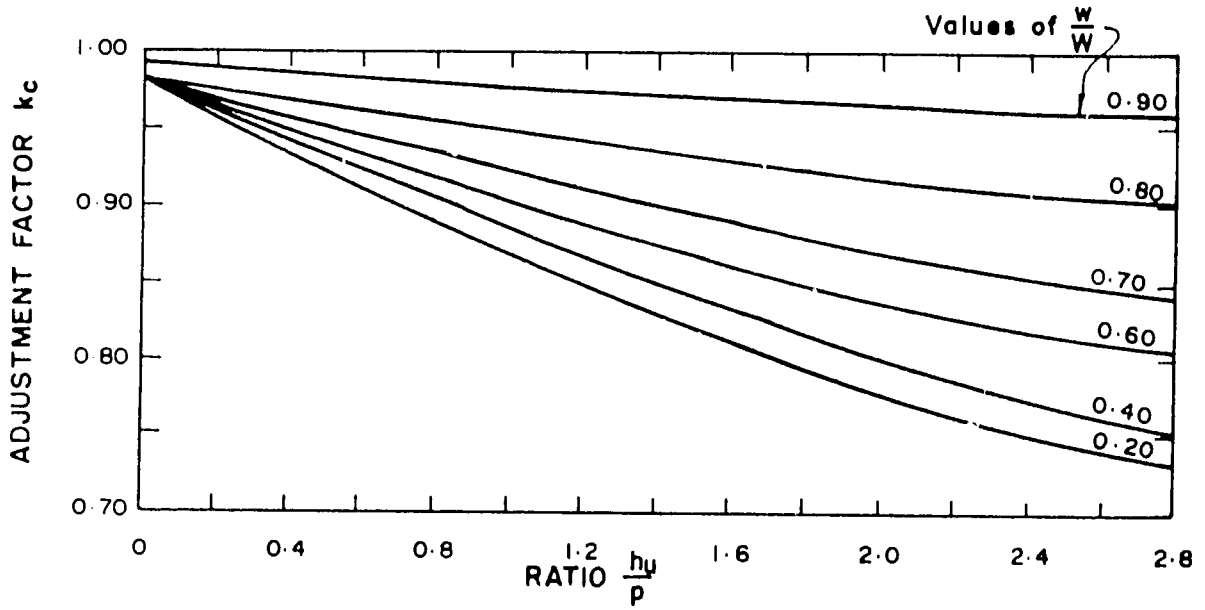

CONTRACTION ADJUSTMENT FACTOR K_c
THIN - PLATE WEIRS

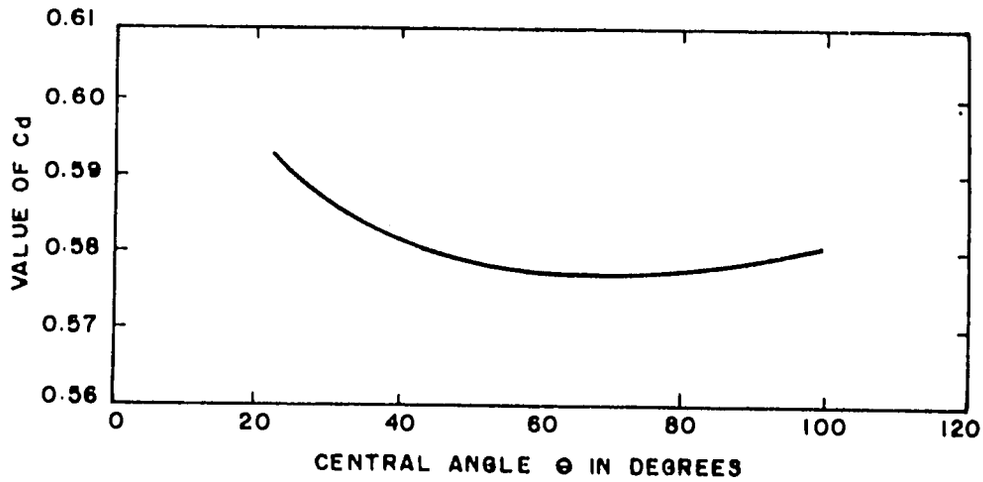

FULLY CONSTRACTED V-NOTCH

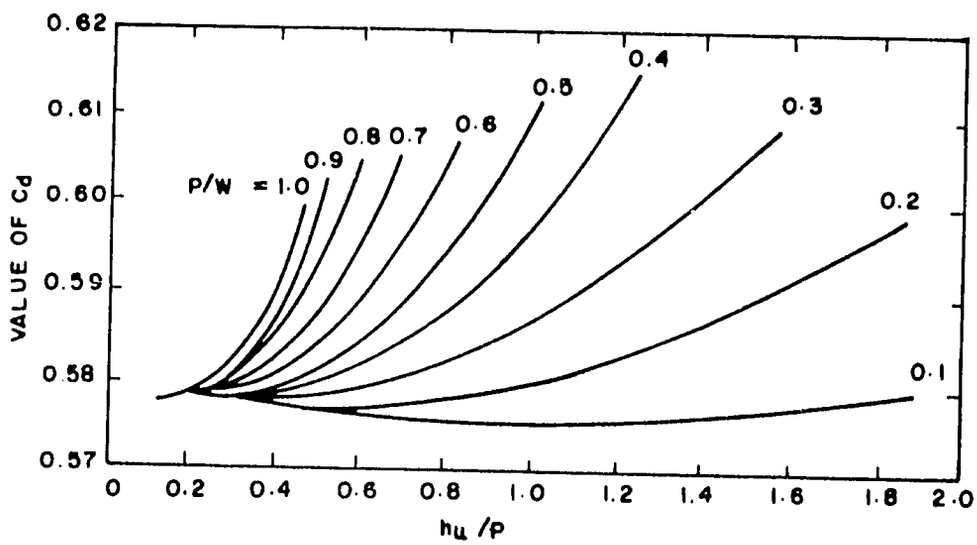

DISCHARGE COEFFICIENTS
THIN-PLATE
V-NOTCH WEIRS

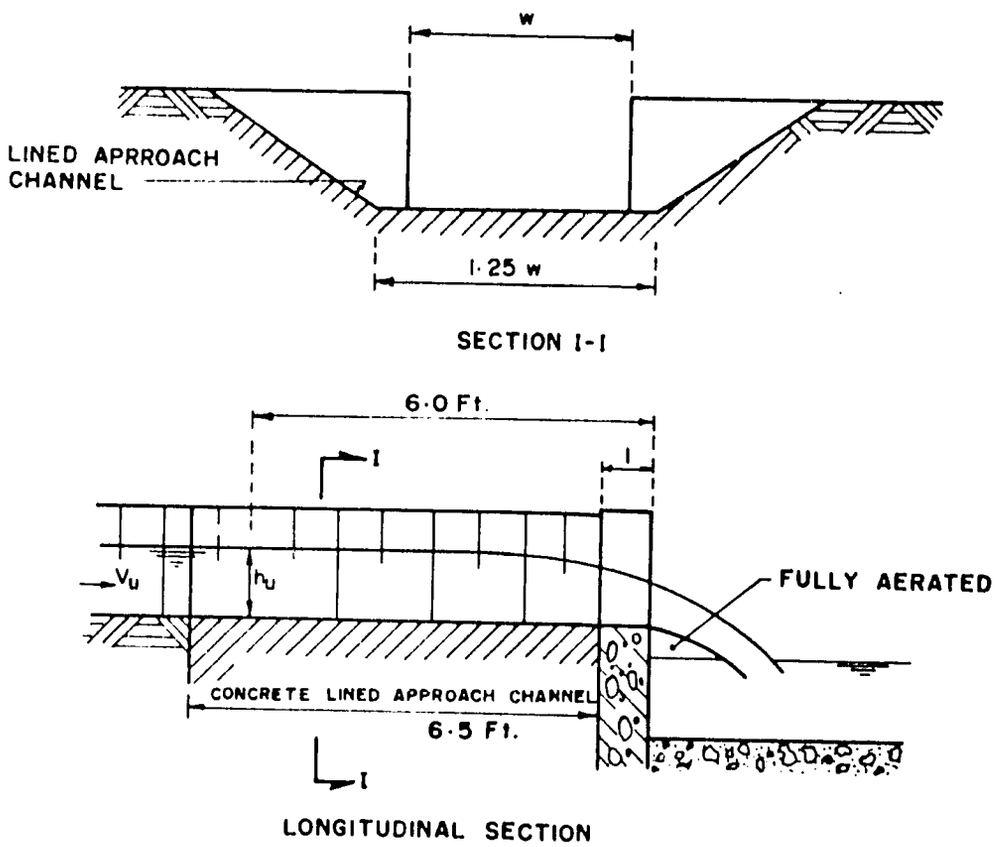

SKETCH OF WEIR SILL
RECTANGULAR CONTROL SECTION

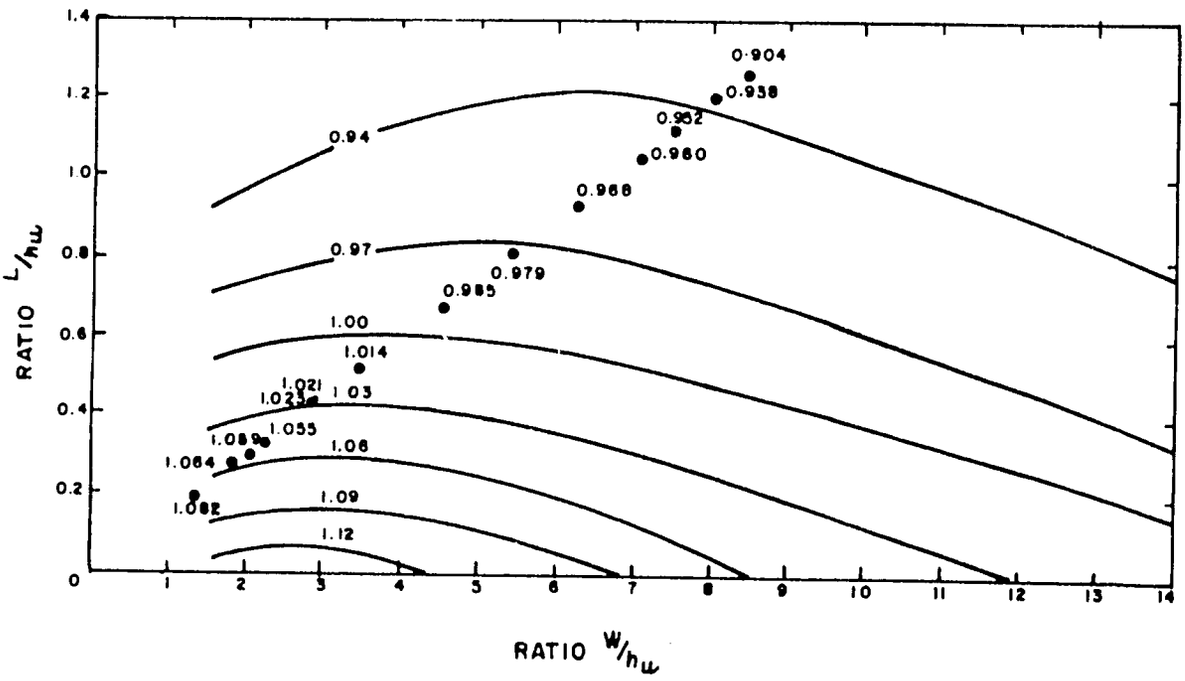

DISCHARGE COEFFICIENT C_d
WEIR SILL WITH
RECTANGULAR CONTROL SECTION

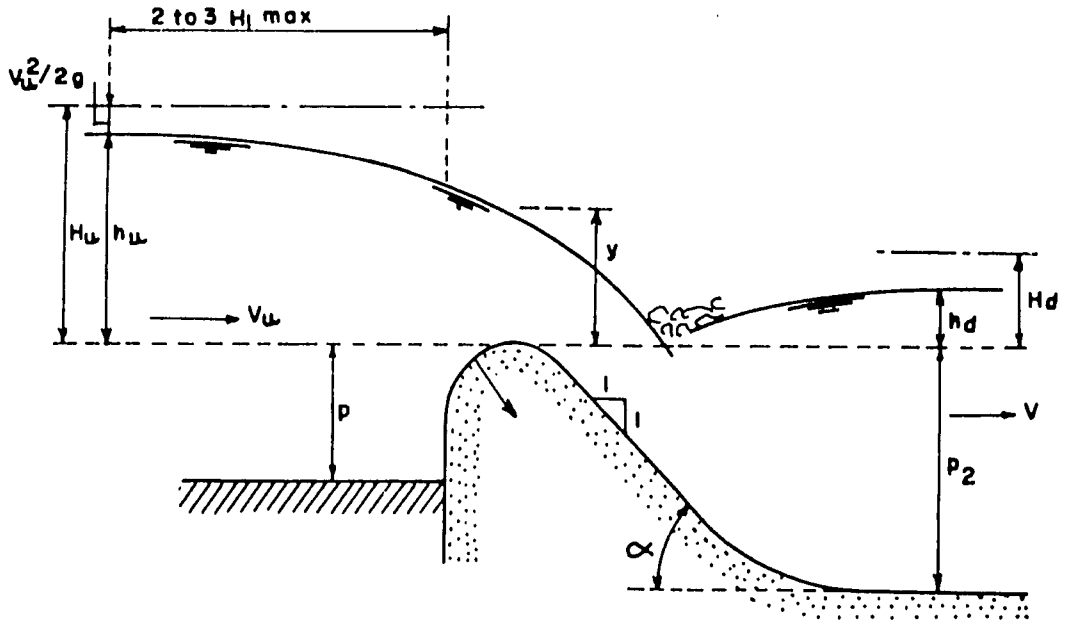

ILLUSTRATION OF TERMS
CYLINDRICAL CRESTED WEIR

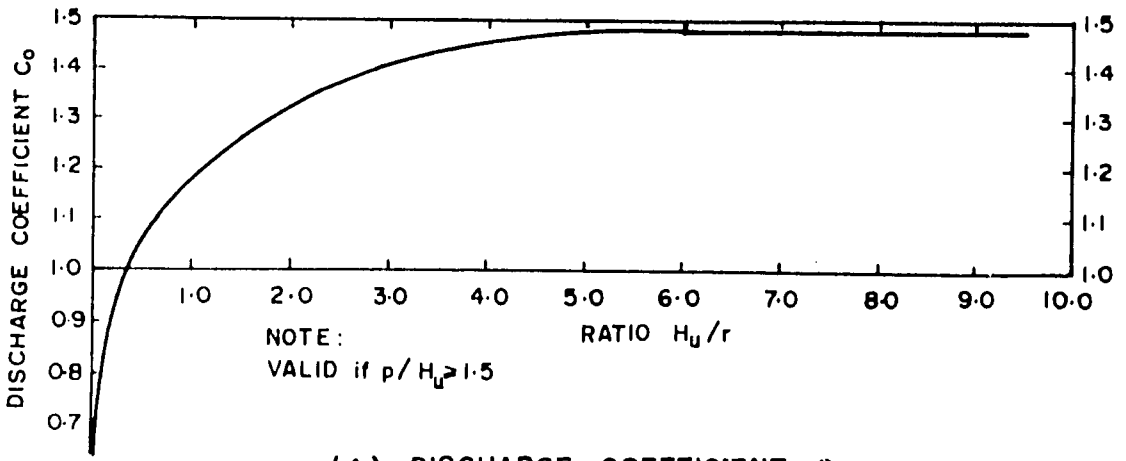

(A) DISCHARGE COEFFICIENT C_o

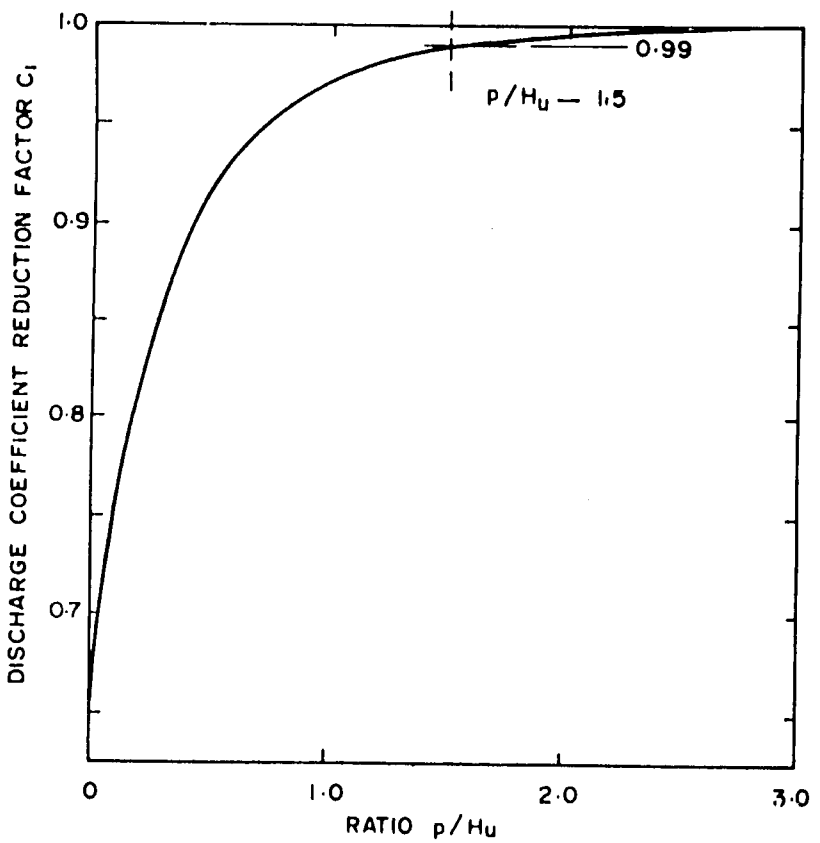

(B) REDUCTION FACTOR C_1

DISCHARGE AND REDUCTION COEFFICIENTS
CYLINDRICAL CRESTED WEIR

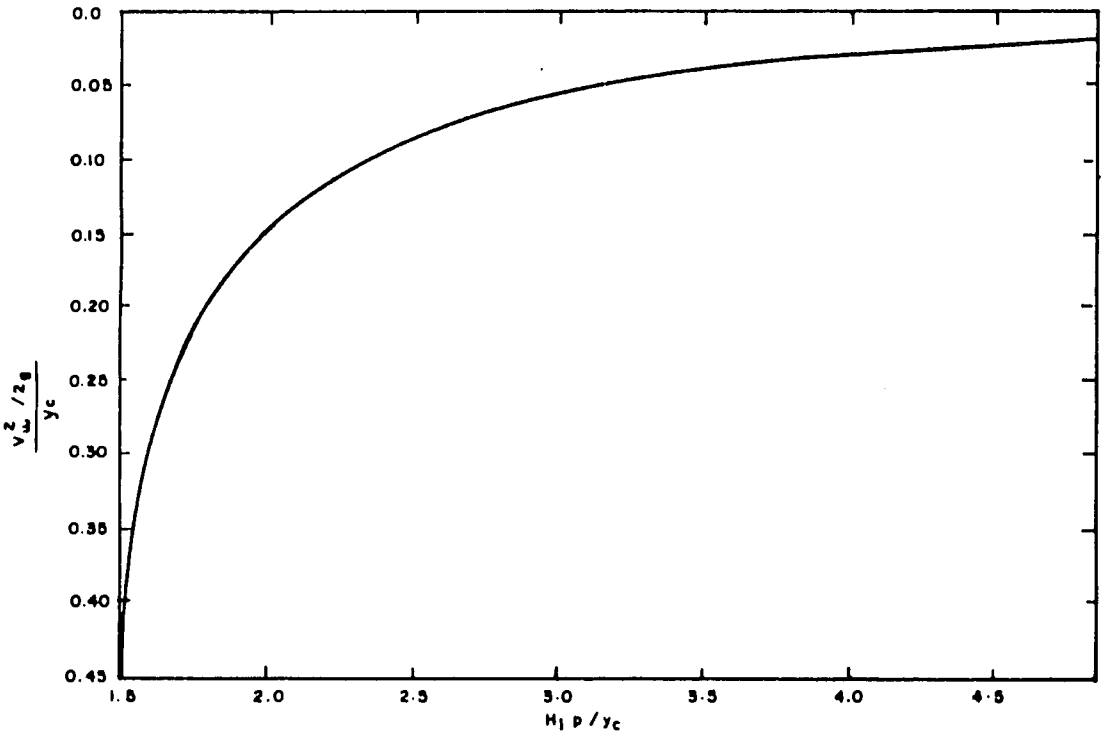

(A) GRAPH FOR THE CONVERSION OF H_1 TO h_u
(RECTANGULAR APPRAOCH CHANNEL ONLY)

NOTE: $y_c = \sqrt[3]{q^2/g}$ and $H_1 = h_1 + V_1^2/2g$

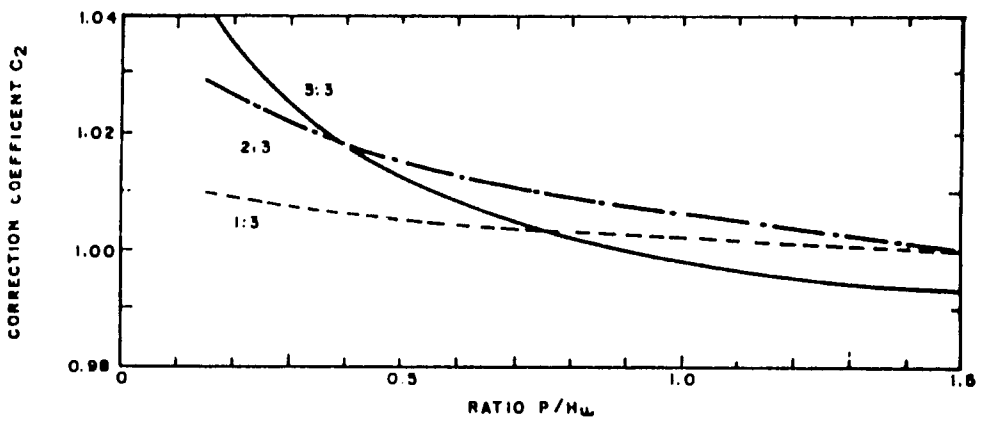

(B) CORRECTION FACTOR C_2 FOR SLOPING UPSTREAM FACE

CONVERSION AND CORRECTION FACTORS
CYLINDRICAL CRESTED WEIR

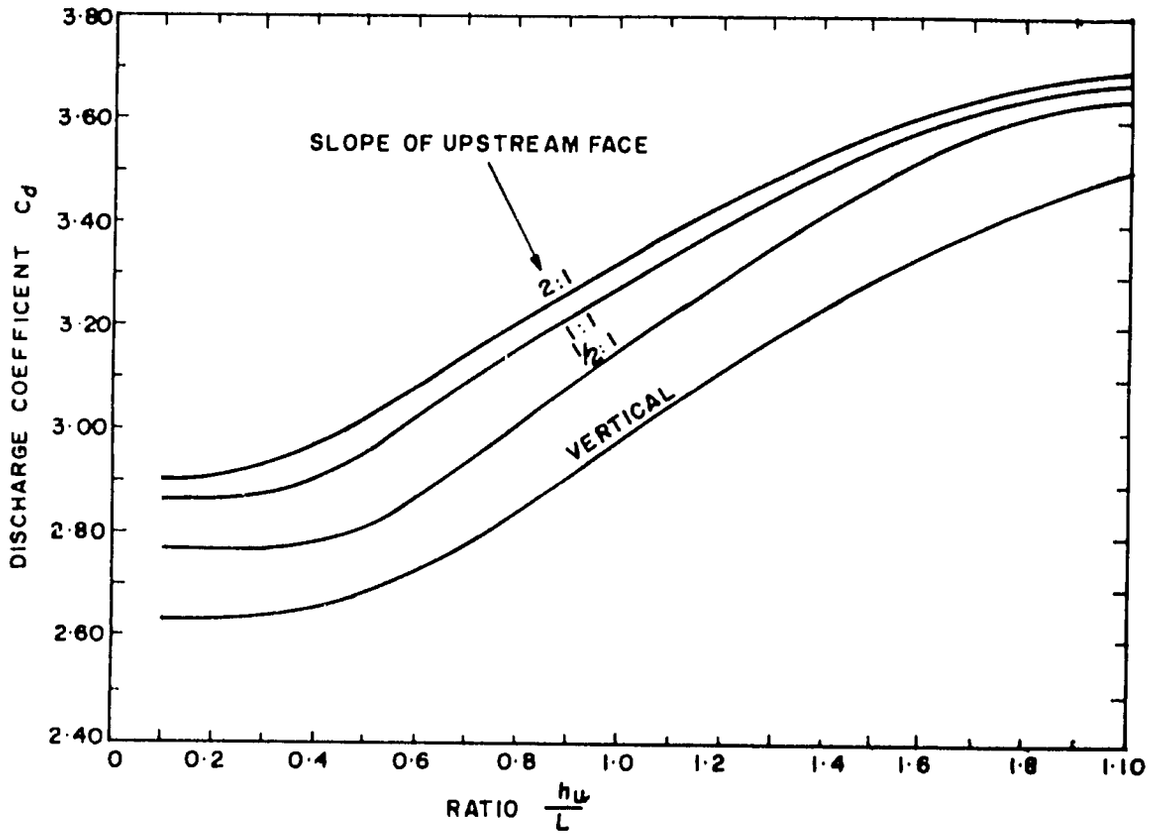

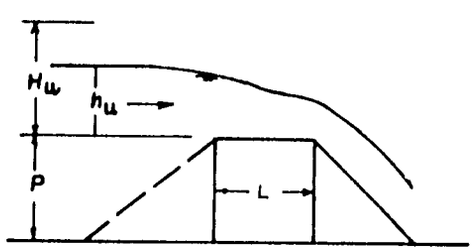

DISCHARGE COEFFICIENTS
BROAD-CRESTED WEIRS

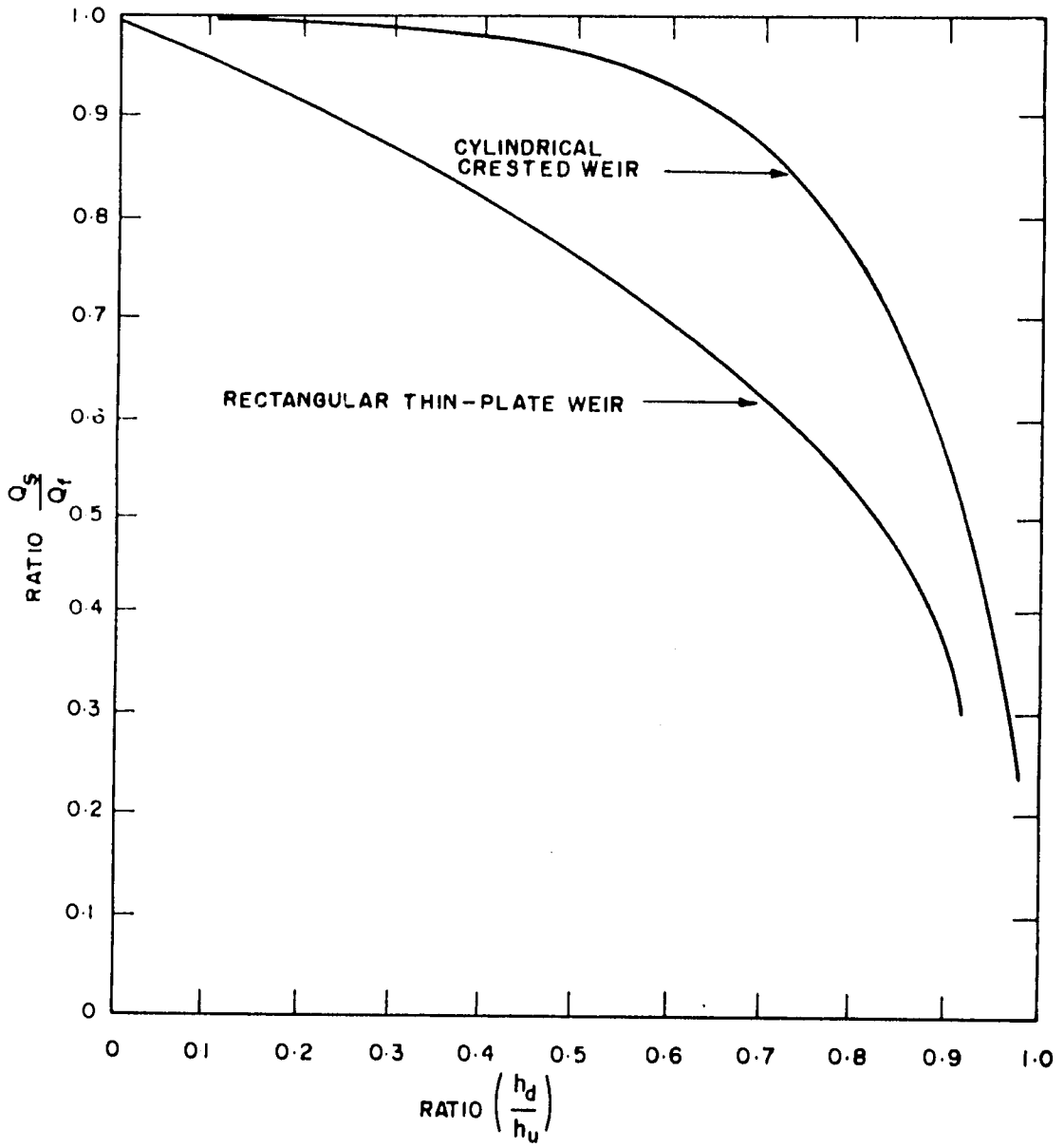

SUBMERGENCE RATIO EFFECTS
FOR TWO TYPES OF WEIRS

CHAPTER VIII

FLUME HYDRAULICS

CHAPTER VIII
FLUMES HYDRAULICS

Section 1 : Introduction

Flumes commonly use utilize a contraction in channel width and a free fall or a steepening of bed slope to produce critical or supercritical flow in the throat of the flume. Flumes have not been used in large canals to measure flow even through they are a second cousin to weirs. Flumes are used extensively in irrigation systems to measure water being delivered to individual outlets or small canals. Weirs have been used more extensively. The Parshall flume has wide use and acceptance in the United Stated but has limited acceptance elsewhere due mostly to the complicated form work required for construction and poor designs on the part of engineers.

Controlled Section Measuring Stations are included in this chapter even though they are not technically a flume since the velocity is not accelerated. In some alluvial canal installations where a regular section (a lined reach) is used the canal bottom may be raised slightly to increase the velocity enough to minimize sediment deposition. Controlled sections are rated using current-meter measurements to calibrate a staff gauge installation. Irregular control sections have been used extensively to measure flows and water surface elevations on distributaries and minors in Pakistan.

Section 2 : Flumes

A. Flow Characteristics

Flumes are hydraulically similar to weirs. The name weir is used when the channel bottom is raised to form the control section. A flume is formed by narrowing the channel. If the control section is formed by both narrowing and raising the bottom, the structure is usually called a flume. The contraction may be combined with a free fall or steepening of bed slope to produce critical or subcritical flow in the throat of the flume. Flumes are categorized with respect to the flow regime that principally controls the

264

measured stage; that is, either critical or supercritical flow flume. Three flumes have been used extensively in irrigation:

* Parshall flume
* Long-throated flume
* Cutthroat flume

B. Hydraulic Characteristic

Long-throated flumes have the same hydraulic characteristics as weirs. Therefore, Equation 7.5 will describe the head-discharge relationship for a rectangular flume, only the discharge coefficient may change in value from that of a broad crested weir.

Other shapes can be used. The trapezoidal control section head-discharge relationship is a function of the critical velocity V_c. The head-discharge equation:

$$Q = C_d\,[w_c y_c + z_c y_c^2][2g(H_u - y_c)]^{0.5} \qquad (8.1)$$

where

C_d = discharge coefficient
w_c = width of control section
y_c = critical flow depth
z_c = horizontal slope indicator where z_c : 1
H_u = upstream sill-reference energy head
g = velocity of acceleration

The value of V_c can be determined from Table VIII-1. The value of H_u is assumed to be that of h_u when the velocity of approach is negligible. The value of the discharge coefficient can be determined from Figure VIII-1 with a value of H_u/L where L is the length of the flumes' throat. Adjustments for the velocity of approach can be made using Figure VI-4 and the relation of $C_d\,A^*/A_u$. Normally the area of the approach section would be trapezoidal so that A_u can be computed from:

$$A_u = z_u\,(p + h_u)^2 + w_u\,(p + h_u) \qquad (8.2)$$

265

where p is the distance from the canal bed to the sill-reference zero; i.e., the distance the flume throat has been raised above the canal bed level.

Calibration will be required to verify the values of C_d in order to establish the stage-discharge relation.

1. Parshall Flume

The Parshall flume is a critical flow flume. It must be designed and constructed to standard dimensions including throat widths. Widths are classified into three groups; (1) 1-, 2-, and 3-inch; (2) 0.5 to 8-foot and (3) 10 to 50-foot flumes. The smaller sizes are often used as portable flume for measuring flows in small channels. The flumes must be constructed to exact dimensions to be reliable. These flumes are not used extensively in Pakistan.

2. Long-Throated Flume

Long-throated flume are hydraulically similar to broad crested weirs. The control section may be of many different shapes but all are classified as critical depth flumes; that is, they depend on the formation of critical flow. Most flumes combine the narrowing of the control section with only a slight raising of the bottom. The throat section has sufficient length so that the streamlines run parallel to each other for a short distance. For high flows, the ratio H_u/L becomes large so that the streamlines become curved.

The flume comprises a throat of which the bottom (invert) is truly horizontal in the direction of flow. The invert level of the throat should not be lower than the dead water level in the canal; that is downstream at zero flow. The modular limit depends to a certain extent on the expansion section; such that the more gentle the expansion the higher the transition submergence or modular limit.

The open flume outlet (mogha) is a special case of the long-throated flume. The use of the open flume has been limited to small canals and watercourses. Its use as an outlet is covered in more detail in Chapter IX.

3. Cutthroat Flume

The cutthroat flume is a throatless flume. Its principal advantage is its flat bottom. It is used in Pakistan as a portable flume to measure flows in watercourses in order to calibrate outlet structures.

D. Submerged Flow

Submerged flow can be analyzed according to the method shown in Chapter VII, Section 5.

E. Non Regular Control Applications

Channel constrictions can often be calibrated and used for water measurement. Constrictions tend to behave in a manner similar to flume except that critical flow may not be obtained. Constrictions will often operate at submerged conditions because of high tailwater conditions.

Section 3 : Controlled Section Measuring Stations

A. Introduction

There are relatively few water measurement structures in use in Pakistan today. The majority of measurements are made using gate openings and a few broad crested weirs. Controlled Section Measuring Stations have been used to augment flow measurement in some instances. These rated sections use staff gauge readings to indicate discharge. Current meters are used to establish the stage-discharge relation. The rated sections consist of a short lined or unlined reach of canal. They are generally located downstream from a cross regulator in the offtaking canals.

It has been proposed that rating sections be installed in many more of the canals in order to provide flow measurements to improve the control of water. The construction of a rating section in a lined channel has the advantage of having a fixed prism cross-section, almost no head loss, and can be constructed so that very little if any sediment accumulates in the section. Unfortunately, downstream conditions in alluvial channels can cause backwater effects which could change the rating curves; therefore, periodic calibration checks are required.

267

Rated section measuring stations are located along a canal where flow and topographical conditions permit the establishment of a stage-discharge rating curve based upon current-meter flow measurements. After the rating curve has been established the flow rate is determined from the curve and the stage at the station. If the channel shape at the station becomes altered, or if the effective roughness of the channel changes, a new rating curve must be prepared.

Rated sections are often preferred over other means of water measurement when large flows are to be measured and the available fall is small. They may also be desireable for alluvial canals even though the discharges are not large. If measurements become necessary in existing canals, rating stations can be set up with relatively little effort and usually without modification to the channel. In instances where flow depths are too small for current meters and the available fall is small, broad crested weirs are probably the best alternative measuring method.

B. Establishment of Regular Control Sections

The discussion on current meter gauging techniques, and operational procedures presented in this section is brief; it is intended to cover only the average water measurements that are required to calibrate rated sections and other water measurement facilities in irrigation systems.

1. Location

A rated section should be located in straight uniform stretch of canal having smooth stable banks and beds. The location should be far enough downstream of curves, turnouts, bridges, irregularities, and installations causing flow disturbances so that the relationship of discharge to gauge height will not be appreciably affected. Owing to the shifting nature of some canal beds, frequent current-meter measurements may be necessary. Sand shifts may occur frequently. To maintain the stage-discharge relation at stations on such canals, current meter measurements may be necessary two or three times weekly; the importance of equitable water distribution justifies such action. A short lined reach of canal will ensure a measuring station of unvarying dimensions if the sediment problem is not serious. Stations should not be

268

located immediately upstream of cross regulators because flow velocities are affected by backwater conditions and, therefore, they are not stable.

2. Construction

Whenever it is desireable to measure the discharge of a canal very accurately at any point, it will generally be best to build a masonry lined reach so as to ensure absolute accuracy in the measurement of the cross-sectional area of the channel. The lined reach should, as a rule, be trapezoidal with side slopes of 1 to 1 and lined with bricks laid without mortar between profile walls 15 feet apart. Near the downstream end of the rating section a stilling well should be build outside the channel, but within the bank, with the zero setting at bed level. The bed or floor of the section should be laid absolutely true at canal bed level. The mean depth will be identical with the gauge reading unless there is silt on the bed. Consequently, the bottom should be sounded at least during initial use of the station and a log maintained of any silt accumulation.

In the event silt deposition appears to be a problem, an extra layer of bricks could be laid on the bottom to allow a slight increase in velocity. A minor silt layer that is essentially permanent in nature (that does not change in depth or form) would not cause a problem because repeated soundings would indicate the same depth with respect to the bench mark elevation.

C. Establishment of Irregular Channel Control Sections

Stable stage-discharge relations can be developed for only non-alluvial channels cross-sections that are not affected by downstream control points. These restrictions eliminate the use of most irrigation channel cross-sections in the Punjab and Sind because the canals are alluvial and have generally flat slopes. There are, however, many channels in NWFP and Baluchistan that can be calibrated as discharge measuring sections.

The calibration procedure is as follows:

1. Select a cross-section suitable for wading, bridge, boat or cableway current meter measurements.

2. Construct a permanent staff gauge near the cross-section and determine the elevation of the zero mark of the gauge.

3. Complete several discharge (current meter) measurements for each gauge reading.

4. Construct a stage-discharge table for small increments of gauge readings.

The stage-discharge relation must be checked frequently to correct for any changes in cross-section.

The essential features of a canal discharge measurement station are a water level gauge, a bench mark and a stable cross-section. Water stages or elevations may be obtained by observations or by an automatic water stage recorder. The types of gauges most commonly used for irrigation water measurement are the graduated enameled inclined or vertical staff gauge, the hook gauge, and the float gauge. Float gauges are often connected to automatic water stage recorders that produce charts of the water surface levels against time. The benchmark should be conveniently and permanently located and the elevation of the datum of the gauge should be carefully referenced to it.

The measuring points should be located in a cross-section taken at right angles to the stream flow. Where the channel is shallow enough to permit wading measurements, or where cableway measurements are taken, a tagged wire should be used to establish the measuring points. When measurements are made from a bridge, permanent measuring points should be established on the bridge. The measuring points should be permanently marked at equal intervals depending upon the size of the canal.

It is important to emphasize that a velocity of 0.3 ft/s is the minimum that can be measured in any cross-section by current meters. For canals with

very flat slopes this could become an important limitation unless special equipment and techniques are used.

TABLE VIII-1

VALUES OF THE RATIO Y_c/H_u AS A FUNCTION OF Z_c AND H_u/L_{Wc} FOR TRAPEZOIDAL CONTROL-SECTIONS

Side Slopes of Channel, Ratio of Horizontal to Vertical (z_c)

H_u/w_c	Vertical	0.25:1	0.50:1	0.75:1	1:1	1.5:1	2:1	2.5:1	3:1	4:1
.00	.667	.667	.667	.667	.667	.677	.667	.667	.667	.667
.01	.667	.667	.667	.668	.668	.669	.670	.670	.671	.672
.02	.667	.667	.668	.669	.670	.671	.672	.674	.675	.678
.03	.667	.668	.669	.670	.671	.673	.675	.677	.679	.683
.04	.667	.668	.670	.671	.672	.675	.677	.680	.683	.687
.05	.667	.668	.670	.672	.674	.677	.680	.683	.686	.692
.06	.667	.669	.671	.673	.675	.679	.683	.686	.690	.696
.07	.667	.669	.672	.674	.676	.681	.685	.689	.693	.699
.08	.667	.670	.672	.675	.678	.683	.687	.692	.696	.703
.09	.667	.670	.673	.676	.679	.684	.690	.695	.698	.706
.10	.667	.670	.674	.677	.680	.685	.692	.697	.701	.709
.12	.667	.671	.675	.679	.684	.690	.696	.701	.706	.715
.14	.667	.672	.676	.681	.686	.693	.699	.705	.711	.720
.16	.667	.672	.678	.683	.687	.696	.703	.709	.715	.725
.18	.667	.673	.679	.684	.690	.698	.706	.713	.719	.729
.20	.667	.674	.680	.686	.692	.701	.709	.717	.723	.733
.22	.667	.674	.681	.688	.694	.704	.712	.720	.726	.736
.24	.667	.675	.683	.689	.696	.706	.715	.723	.729	.739
.26	.667	.676	.684	.691	.698	.709	.718	.725	.732	.742
.28	.667	.676	.685	.693	.699	.711	.720	.728	.734	.744
.30	.667	.677	.686	.694	.701	.713	.723	.730	.737	.747
.32	.667	.678	.687	.696	.703	.715	.725	.733	.739	.749
.34	.667	.678	.689	.697	.705	.717	.727	.735	.741	.751
.36	.667	.679	.690	.699	.706	.719	.729	.737	.743	.752
.38	.667	.680	.691	.700	.708	.721	.731	.738	.745	.754
.40	.667	.680	.692	.701	.709	.723	.733	.740	.747	.756
.42	.667	.681	.693	.703	.711	.725	.734	.742	.748	.757
.44	.667	.681	.694	.704	.712	.727	.736	.744	.750	.759
.46	.667	.682	.695	.705	.714	.728	.737	.745	.751	.760
.48	.667	.683	.696	.706	.715	.729	.739	.747	.752	.761
.5	.667	.683	.697	.708	.717	.730	.740	.748	.754	.762
.6	.667	.686	.701	.713	.723	.737	.747	.754	.759	.767
.7	.667	.688	.706	.718	.728	.742	.752	.758	.764	.771
.8	.667	.692	.709	.723	.732	.746	.756	.762	.767	.774
.9	.667	.694	.713	.727	.737	.750	.759	.766	.770	.776
1.0	.667	.697	.717	.730	.740	.754	.762	.768	.773	.778
1.2	.667	.701	.723	.737	.747	.759	.767	.772	.776	.782
1.4	.667	.706	.729	.742	.752	.764	.771	.776	.779	.784
1.6	.667	.709	.733	.747	.756	.767	.774	.778	.781	.786
1.8	.667	.713	.737	.750	.759	.770	.776	.781	.783	.787
2	.667	.717	.740	.754	.762	.773	.778	.782	.785	.788
3	.667	.730	.753	.766	.773	.781	.785	.787	.790	.792
4	.667	.740	.762	.773	.778	.785	.788	.790	.792	.794
5	.667	.748	.768	.777	.782	.788	.791	.792	.794	.795
10	.667	.768	.782	.788	.791	.794	.795	.796	.797	.798
		.800	.800	.800	.800	.800	.800	.800	.800	.800

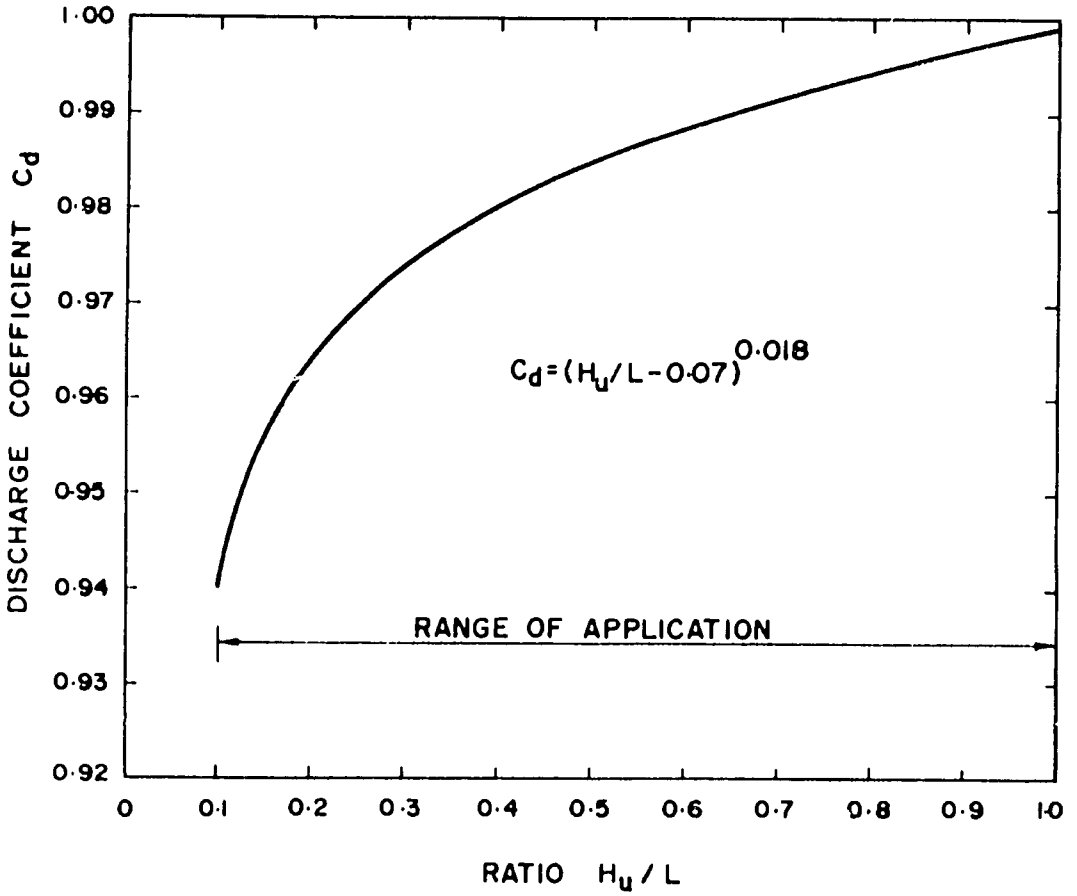

DISCHARGE COEFFICIENT C_d
TRAPEZOIDAL FLUME

CHAPTER IX

WATERCOURSE OUTLET HYDRAULICS

CHAPTER IX
WATERCOURSE OUTLET HYDRAULICS

Section 1 : Introduction

The control of flow into a watercourse is dependent on the water surface level, type of outlet structure, dimensions, and invert level of the structure. Under a set condition the watercourse should receive the sanctioned flow. Any tampering with the structure will increase the flow to the watercourse. The relationship between tampering and the percent increase in flow is not known. Water measurement will indicate the amount of increase. It will also confirm the discharge coefficient used for design.

Section 2 : Need for Watercourse Discharge Measurements

The average flow into a watercourse will vary between 0.5 and 5.0 cfs with the majority in the 1.5 to 3.5 cfs range. Measurements is usually made using the pygmy current meter mounted on a wading rod or with a portable flume or broad crested weir. The Parshall flume, flat-bottomed trapezoidal flume, or the cutthroat flume can be constructed to be portable and are used for smaller flows. All of the portable flumes or weirs have one drawback in that they will cause the water upstream of the device to rise. If freeboard is lacking, this increase will be sufficient to overtop the watercourse banks. It is suggested that watercourses be calibrated when the inflow is less than the design flow to reduce the risk of overtopping.

Where modular flow exists, the water level upstream of outlet works would indicate the flow based on a stage-discharge relation once the correctness of the discharge coefficient is determined. Under submerged conditions, both the upstream and downstream water levels would have to be measured.

The knowledge of the real flows through the outlet works allows the distributary or other canals to be more accurately calibrated with respect to seepage losses.

Flow measurements or changes in water levels at the tail cluster of a canal indicate how well the canal is functioning. Decreases in flow indicate changes upstream which would be due to tampering, sedimentation, checking up or illegal withdrawal. Calibration and accurate seepage loss estimates will allow the monitoring of the water surface levels to indicate where the problems might be. As pointed out in Chapter II, increasing the flow coming into a distributary canal has only a minor effect on what reaches the tail cluster as each outlet would take a proportional share. Resetting the outlets is the primary way to ensure water deliveries to the tail cluster.

One additional reason for checking the discharge coefficient in outlets is that their original design was made more than 40 years ago based on only a few models and measurements. There has been many improved techniques made since then in the accuracy and making discharge measurements. Also, the construction techniques used do not ensure that the field constructed outlet is dimensionally accurate so the discharge coefficient would change slightly. It is also known that discharge coefficients for many hydraulic structures do not remain constant for all flow conditions. The degree of variation over the normal flow range of 0.5 Q_d to 1.25 Q_d is not well documented.

Section 3 : Description of Outlets

A. General

There are three standard outlets in use on most canal systems:

* Open Flume (OF)
* Adjustable Orifice Semi-Modular (AOSM or APM)
* Pipe

The open flume type of outlet is used towards the tailend of a canal because of its flexibility or ability to handle increases in flow. There are limits to the abutment wall height of the open flume which sets the sill height. A sill elevation set to high above the canal bed causes a restricted silt draw.

The APM or AOSM outlets are normally used in the head reaches of a canal because they can be set lower to improve the silt draw. The orifice has low flexibility so changes in the water surface elevation cause only a proportional discharge change in the outlet discharge. This is required in order to get water to flow to the tail cluster.

Pipes are still used in most systems even though their use is discouraged. The farmers seem to prefer their use.

B. Open Flume Outlet

The open flume outlet is a special case for a long-throated flume with a rectangular control section. The original design was introduced by E.S. Crump in 1922 on the Lower Bari Doab Canal. The main features are shown in Figure IX-1. The throat length was equal to 2.5 G where G was the design sill-reference height. The minimum throat width, B_t, was 0.2 foot. The upstream approaches/headwalls are designed to enable the outlet to take its fair share of the silt load. The upstream face is set back a distance W equal to q/Q. The initial entrance width to the flume is also set at W.

The discharge is determined from the equation

$$q = KB_tG^{3/2} \tag{9.1}$$

The adopted coefficient K varied according to the throat width as follows:

B_t	K
0.20 ft to 0.29 ft	2.90
0.30 ft to 0.39 ft	2.95
Over 0.40 ft	3.00

Equation 9.1 was derived from the standard equation for a rectangular long-throat flume.

$$Q = C_d\ C_v\ 2/3\ (2/3g)^{0.5}\ W\ (h_u)^{1.5} \tag{9.2}$$

217

Figure IX-2 defines the dimensions in Equation 9.2. A comparison of Equations 9.1 and 9.2 indicates that the coefficient K is equivalent to $C_d\ C_v\ 2/3(2/3g)^{0.5}$ which reduces to $3.0888\ C_d\ C_v$. Assuming the effect of approach velocity is negligible the theoretical value of C_d used to determine K was 0.97. The effects of geometry and friction decrease the value of C_d to 0.955 and 0.94 for the two narrowest throat widths.

The discharge coefficient C_d is a function of both the sill-reference head, h_u, and the ratio H_u/L. Therefore, it is not a constant and varies with stage. This is the reason that the O.F. outlet is required in the tail cluster and tail reaches because the discharge not only increases with the 3/2 power of h_u but also with an increasing C_d.

The open flume can be easily rated for water measurement and the stage-discharge relation determined. The value of C_d is linear when values are plotted on logarithmic paper except in the low flow range (small values of h_u). The open flume can also be rated for submerged conditions. The transition to submerged flow or modular limit occurs with a submergence ratio of about 0.75.

C. Adjustable Orifice Semi Module

The adjustable proportional module (APM) was introduced by E.S. Crump's in 1922. The term APM is still used in the Punjab even though the AOSM is now the standard. The APM was later modified to the Adjustable Orifice Semi-Module (AOSM) when the sill level was lowered from 0.6 depth to about 0.9 depth in order to improve the silt draw. In addition, the equation was modified to better account for the head loss. Lowering the installed sill level modified the proportional aspects of the discharge with a change in stage.

The general equation for computing discharge for the AOSM is

$$q = K\ B_t\ Y\ (H_s)^{0.5} \qquad (9.3)$$

The definition of dimensions and terms is shown in Figure IX-3. The value of K is 7.3. Six standard widths have been adopted; 0.2-, 0.25-, 0.32-, 0.40-, 0.50- and 0.63-foot. The first four being in common use.

The adoption of narrow throat widths indicated that the head loss was much higher than the indicated by Crump. Gulhati (1939) derived an empirical equation for determining the minimum modular head of an AOSM. The equation is:

$$H_m = 0.82\ H_s - 0.5\ B_t \qquad (9.4)$$

The AOSM is proportional when the roof is at 0.3 D (the depth of the distributary canal at full supply depth). With a rise in the FSL, the flexibility which is equal to 3D/10G is reduced and the outlet becomes subproportional. This is the usual case when the outlet sill is set at 0.9D. Similarly, with a fall in the FSL, the flexibility is increased and the outlet becomes hyper-proportional. Therefore, when the sill is set at 0.9D a fall in the FS level causes the outlet to draw better.

The depth Y has to be less than half G to ensure the orifice flowing full. This is important when the sill level is set at the 0.6 D level. The flow regime changes from orifice flow to weir flow even Y is greater than 0.5 G.

Equation 9.3 was derived from the old orifice equation that refers the head discharge to the sill level:

$$Q = C_d\ C_c\ W\ b^{1.5}\ (2g)^{0.5}\ (n - C_c)^{0.5} \qquad (9.5)$$

where

C_d = coefficient of discharge

C_c = coefficient of contraction

w = width of orifice

b = height of orifice

n = ratio of h_u/b

h_u = upstream sill-reference level

279

The value of the contraction coefficient C_c is derived from the ratio y/b where y is the depth of flow in the vena contracta. The vena contracta occurs at a distance l from the orifice face and is equal to b/C_c which is equal to $h_u/n\ C_c$. The sill-reference level is taken as the sill elevation and not the center of the orifice opening which is sometimes the case.

Substituting $n = h_u/b$ and $C_c = y/b$ in Equation 9.5

$$Q = c_d\ y/b\ w\ b^{1.5}\ (2g)^{0.5}\ (h_u/b - y/b)^{0.5}$$

consolidating terms

$$Q = c_d\ y\ w\ (2g)^{0.5}\ (h_u - y)^{0.5}$$

Substitute $h_u = G = y + H_s$, $Y = y$, and $B_t = w$

$$Q = C_d\ (2g)^{0.5}\ B_t\ Y\ (Y + H_s - Y)^{0.5}$$

again consolidating terms

$$Q = C_d\ (2g)^{0.5}\ B_t\ Y\ (H_s)^{0.5}$$

Assume $C_d = 0.91$ and let $K = C_d\ (2g)^{0.5}$

Therefore

$$K = 0.91\ (64.4)^{0.5} = 7.30$$

and

$$q = Q = 7.3\ B_t\ Y\ (H_s)^{0.5}$$

The value H_s is measured in the field and recorded on the form "Statement Showing Working of Outlets" or the H Register as it is known as. The term H is referred to as the working lead. Exhibit IX-1 is an example of the H Register.

D. <u>Pipe Outlets</u>

Pipe outlets have been designed in Pakistan using the equation

$$Q = KA(h_u)^{0.5} \qquad (9.6)$$

where

K	=	5
A	=	area of pipe opening = $\pi d^2/4$
h_u	=	upstream sill-reference head on pipe
d	=	inside diameter of pipe in feet

Equation 9.6 is for free flow conditions where the downstream water level does not exceed the level of the pipe crown. The coefficient K is equivalent to $C_d\ (2g)^{0.5}$ and for $K = 5$, C_d is equal to 0.623.

E. Submerged Flow Conditions

The outlets have generally been designed and constructed to operate under modular flow conditions. Field observations, measurements and records indicate that modular flow is not always present and submerged flow conditions exist. Field conditions change with time. Modular or free flow conditions require the flow to go through critical velocity. When critical flow occurs, the flow is uniquely related to the sill-reference depth of "head" upstream of the control section. When the downstream or tailwater depth is raised to the extent that the flow velocity at every point through the constriction becomes less than the critical value, then the constriction or outlet in this case is operating under submerged flow conditions.

A constriction or outlet operating under submerged flow conditions requires that both upstream depth, h_u, and downstream depth, h_d be measured. The point at which the flow regimes change from free to submerged flow occurs at the point of transition submergence, S_t. The point at which S_t occurs does not cause any visual change in the flow pattern, therefore, it is important that if the canal officer even suspects that submergence has occurred, both head and tailwater levels should be measured.

The occurrence of submerged flow for an outlet means that the discharge will be less than if free flow conditions existed. Therefore, as the submergence ratio h_d/h_u increases and/or approaches 1.0 the decrease inflow becomes appreciable; up to 20% in some cases. This means that the watercourse would

only receive about 80% of what it would receive if the free flow condition existed.

F. Calibration

There is a considerable need for outlet calibration as shown in Tables III-1 and III-2. Every effort should be made to institute a calibration program as detailed in Chapter III. Table IX-1 reiterates the problem and provides an example of the calibration processing of data.

TABLE IX-1
EXAMPLE CALIBRATION OF PIPE OUTLETS IN A CANAL REACH

Location Outlets	Sanc. Dis.	Pipe Dia		First Measurement					Second Measurement					Third Measurement					Average
RD	Q cfs	Sanc. in	Meas. in	ha ft	hb ft	Q cfs	hu ft	Cd	ha ft	hb ft	Q cfs	hu ft	Cd	ha ft	hb ft	Q cfs	hu ft	Cd	Cd
80755/L	1.08	6	6	0.50	0.20	1.26	2.33	0.52	0.54	0.21	1.45	2.88	0.54	-	-	1.44	2.96	0.53	0.53
80850/L	[illegible].61	12	12	1.03	0.62	4.67	2.17	0.50	1.24	0.76	6.69	2.72	0.64	-	-	6.12	2.81	0.58	0.58
81470/L	0.20	4	4	0.28	0.22	0.40	1.92	0.41	0.19	0.10	0.19	2.14	0.18	0.32	0.20	0.55	2.20	0.52	0.52
83020/L	0.27	3	3	0.29	0.12	0.46	2.37	0.76	0.31	0.11	0.52	2.66	0.81	-	-	0.51	3.38	0.78	0.78
83600/L	0.12	3	3	0.20	0.30	0.49	2.91	0.73	0.23	0.10	0.31	3.30	0.24	--	--	Closed	--	--	0.48
83800/L	0.98	4	6	0.60	0.30	1.16	3.33	0.40	0.70	0.42	1.38	2.33	0.64	0.66	0.36	1.38	1.83	0.64	0.66
84650/L	2.13	6	6	0.66	0.33	1.38	1.83	0.64	0.82	0.30	2.06	3.16	0.73	0.75	0.27	1.75	3.12	0.63	0.64
85340/L	1.30	6	6	0.79	0.48	1.90	2.83	0.71	0.81	0.40	3.16	3.12	0.70	0.81	0.40	3.16	3.12	0.70	0.70
85632/L	2.52	7	9	1.04	0.50	3.20	1.29	0.80	1.16	0.56	3.90	2.62	0.68	1.12	0.51	3.66	2.32	0.68	0.68
86500/L	0.92	6	9	0.80	0.40	2.00	1.38	0.48	1.09	0.52	3.48	1.96	0.68	1.11	0.47	0.54	2.09	0.69	0.68
89480/L	1.47	6	6	0.86	0.34	2.25	2.17	0.96	0.89	0.38	2.40	2.84	0.90	-	-	2.41	2.84	0.93	0.93
91080/L	0.47	4	4	0.46	0.15	0.71	2.29	0.69	0.52	0.18	0.69	2.92	0.76	-	-	0.85	2.95	0.73	0.73
91504/L	0.18	4	4	0.31	0.08	0.34	2.99	0.29	0.36	0.08	0.45	3.50	0.35	-	-	0.41	3.58	0.32	0.32
93100/L	0.96	5	6	0.63	0.23	1.27	2.83	0.47	0.74	0.28	1.71	3.21	0.60	0.72	0.28	1.62	3.21	0.56	0.56
93500/L	3.41	9	12	1.28	0.58	4.68	2.33	0.48	1.23	0.54	4.40	2.56	0.43	1.24	0.62	4.41	2.55	0.44	0.44
94460/L	1.71	9	9	1.16	1.10	2.60	0.59*	0.89	1.05	0.92	2.70	0.52	0.88	0.99	0.80	2.65	2.90*	0.86	0.87
95630/L	6.02	12	12	1.28	0.72	10.17	2.50	1.02	1.29	0.52	10.43	2.92	0.97	-	-	10.62	2.90	0.99	0.99
97003/L	0.53	4	6	0.43	0.31	0.95	1.18*	0.55	0.52	0.46	1.10	0.94*	0.72	0.47	0.21	1.17	0.26*	0.45	0.57
100000/L	0.74	4	6	0.73	0.31	2.25	2.98	0.82	0.74	0.13	2.38	3.43	0.82	-	-	2.46	3.66	0.82	0.82
100330/L	0.41	4	4	0.39	0.13	0.79	2.39	0.73	0.40	0.12	0.83	3	0.69	-	-	0.86	3.03	0.71	0.71
102000/L	0.85	4	4	0.46	0.20	1.08	2.66	0.94	0.48	0.21	1.17	3.32	0.92	-	-	1.19	3.36	0.93	0.93

Note: 1. Calibration performed on Warsak Canal, NWFP, 21 FEB--5 MAR 87

2. * Measured hu-hd, submerged flow condition.

STATEMENT SHOWING WORKING OF OUTLETS

[Working head of non-modular outlets is underlined]

R. D. of Outlet	Tide	Type of Outlet	Designed		April			May			June			July			August		
			'H'	M.M.H.	'H'	Working Head	Date	'H'	Working Head	Date	'H'	Working Head	Date	'H'	Working Head	Date	'H'	Working Head	Date
1	2	3	4	5	6	7	8	9	10	11	12	13	14	15	16	17	18	19	20

STATEMENT SHOWING WORKING OF OUTLETS.

[Working head of non-modular outlets is underlined]

SEPTEMBER			OCTOBER			NOVEMBER			DECEMBER			JANUARY			FEBRUARY			MARCH		
'H'	Working Head	Date	'H'	Working Head	Date	'H'	Working Head	Date	'H'	Working Head	Date	'H'	Working Head	Date	'H'	Working Head	Date	'H'	Working Head	Date
21	22	23	24	25	26	27	28	29	30	31	32	33	34	35	36	37	38	39	40	41

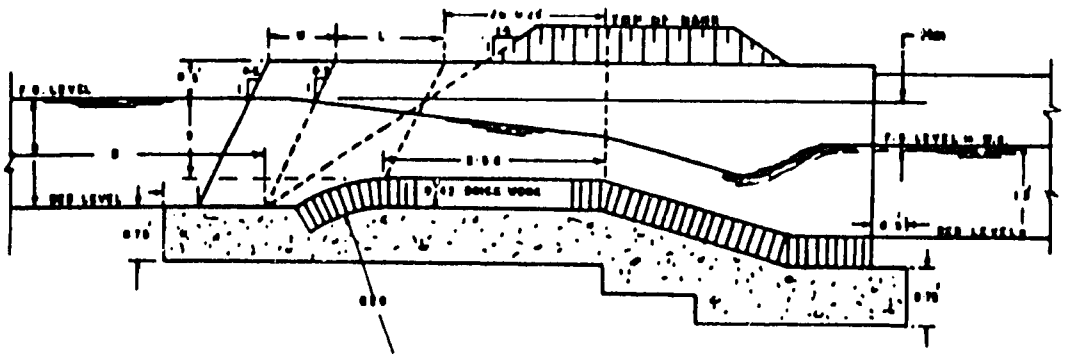

SECTION A-A

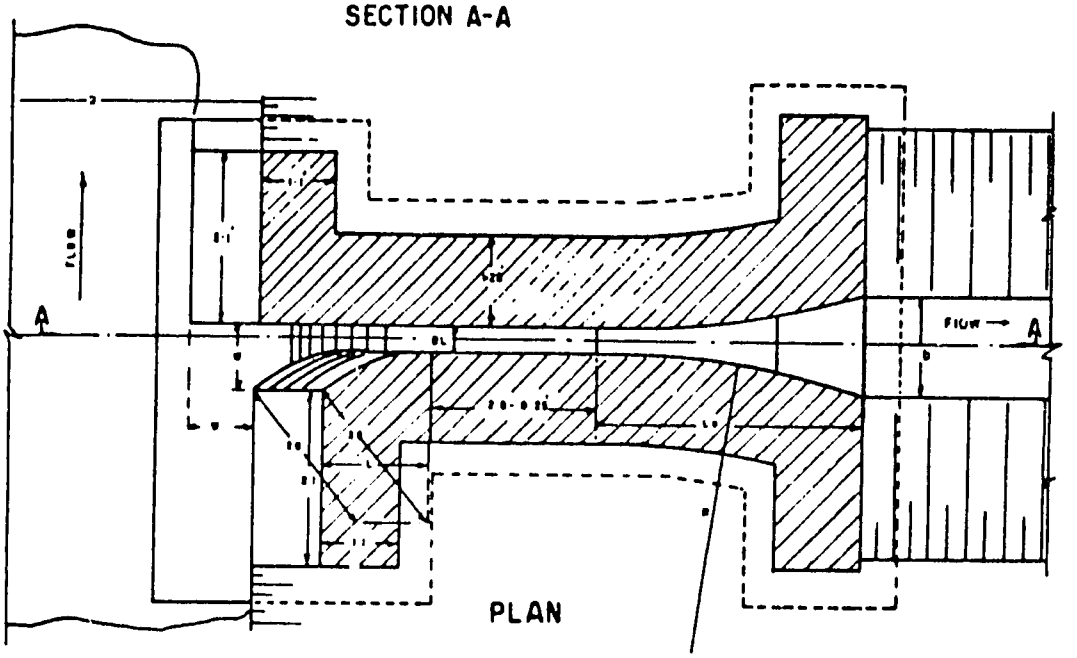

PLAN

Notes:

B	=	bed width	Upstream of Outlet
D	=	FSL depth	
Q	=	Flow in canal	
G	=	F.S. depth on crest	
q	=	Discharge of outlet	
B_t	=	Throat width	
b	=	Bottom width, watercourse	
W	=	b/Q (B + D/2) width of wet up from toe of canal bank	
L	=	$\sqrt{(W-B_t)(4G-W-B_t)}$ length of approach curve	
L_o	=	Length of outfall	
R	=	$\frac{q - B_t}{4} + \frac{L_o^2}{q - B_t}$ radius of outfall curve	

OPEN FLUME OUTLET

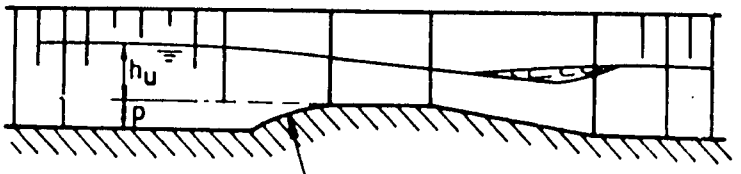

SECTION A-A

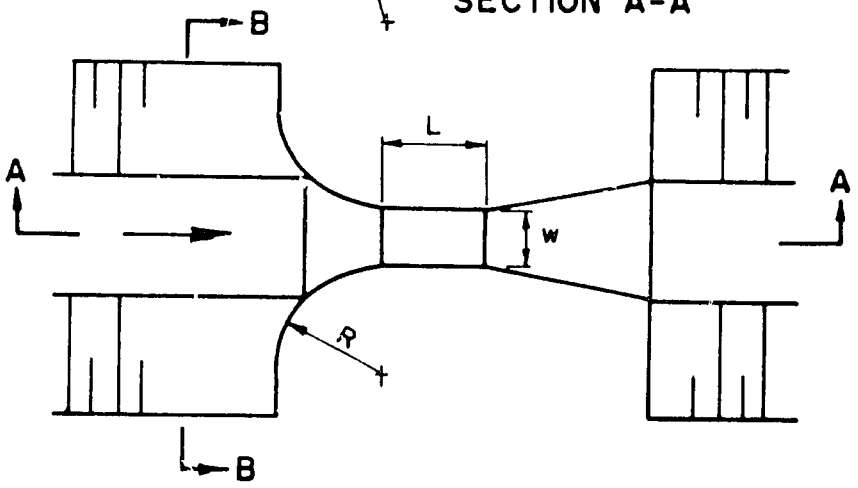

PLAN

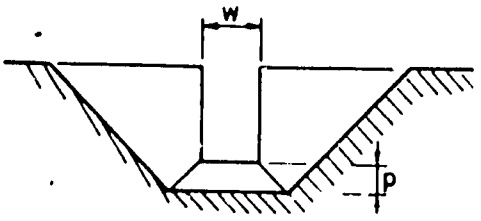

SECTIONAL VIEW B-B

RECTANGULAR OPEN FLUME

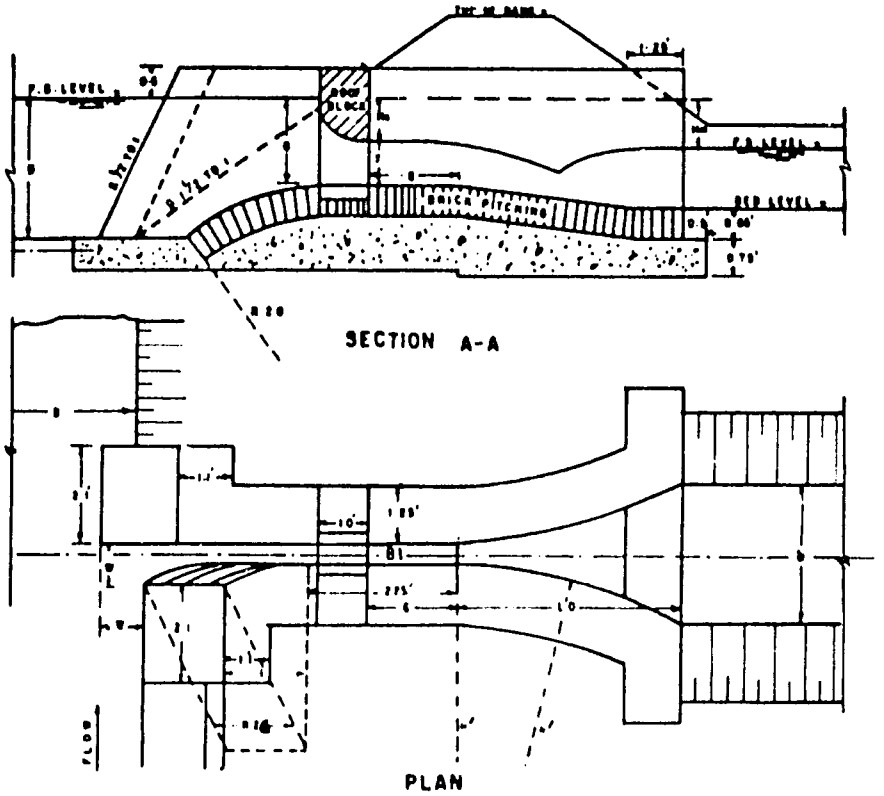

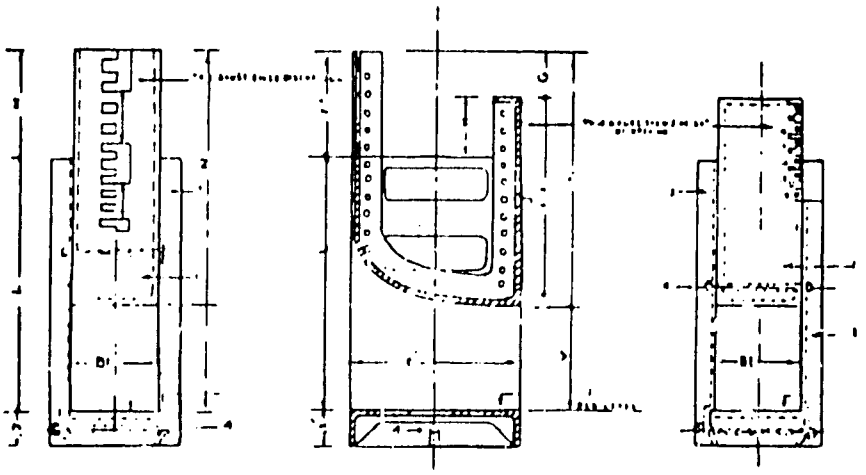

IMPROVED TYPE ROOF BLOCK

AOSM OUTLET

CHAPTER X

DATA PROCESSING

CHAPTER X
DATA PROCESSING

Section 1 : Introduction

Data processing in the procedure of taking the various flow measurements that are made and putting them into a form that is useful to the canal officers. For example, a stage measurement made by the gauge reader is the measurement made in the field. Until the stage reading is converted to discharge, the information is of not much value in determining where the water is going and who is getting how much. In other words, evaluation of information or data can not be made until it is in a form that can be used. Long term evaluations require that daily and monthly flow records be consolidated into the format that is used in their evaluation.

The calibration of a hydraulic structure requires a considerable amount of data processing to develop the stage-discharge relations for that particular structure. The process must be repeated for each structure even though the procedure is the same and the final results similar. The amount of work required to prepare stage-discharge relation for all outlets requires a massive effort.

There are several stages of data processing and recording to consider:

* Calibration of an individual hydraulic structure for water measurement
* Computation of discharge records
* Presentation of records
* Recalibration/adjustments
* Canal profile and water surface levels
* Canal cross-sections
* Outlet Registers
* Register of Sanctioned and Regulated Flows

It is an important function to keep all records current. The individual calibration determinations must be kept on file for reference and are required to check the calibration annually. If the data being measured and collected in the field is not processed on a continuous basis, the entire collection program is of little use to anyone.

Records should be complete and yet without unnecessary duplication of data collection. Complete water records will be vital to support the system's right to continue its use of water in the quantities and for the purposes for which it has been making diversions.

Section 2 : Data Collection

The gauge keeper will measure and record all necessary information from each measuring point under their responsibility twice a day or as otherwise directed. When changes are to be made in the distribution of water, the gauge is read prior to making the change and entered into the record as found. Adjustments in the flow distribution are then made as required and, after the changes have settled down, the gauge is again read and the reading entered into the records as left. The cleaning of weeds and trash in front of an outlet is done after the gauge is first read. The gauge is read a second time after the cleaning and recorded in the left column.

Ditto marks must not be used in the records. The entry of the gauge reading in increments of 0.01 foot must be made each day the water is running.

All discharges which have been affected by weeds, storms, power failures, unauthorized regulation, etc. must be explained by a note in the remarks column. Any day the headworks is not visited a dash (-) should be entered in the gauge column and the assumed delivery entered in the discharge column.

When the Sub-engineer or others are authorized and have the responsibility to operate distributary and minor headworks the above also applies. Records must be entered in the operating log and an appropriate field notebook prior

to leaving the measuring station. Records must be entered in the permanent record immediately upon returning from the field to the office or official station.

The remarks column should be used freely to explain special conditions or circumstances pertaining to a structure through which water is being delivered. For example, the gauge reading may be unexpectedly low because of debris in the gate opening or the main conveyance canal may be low on water. There could be many other reasons for the variation and the applicable reason should be written in the space provided. Usually a short, concise explanation is sufficient. On the other hand, if there is some really special occurrence warranting a detailed explanation it can be written on the back of the report form.

Section 3 : Discharge Ratings

A. General

Continuous records of discharge at measurement stations are computed by applying the discharge rating for the structure to records of stage. Discharge ratings may be simple or complex, depending on the number of variables needed to define the stage-discharge relation. This section is concerned with ratings in which the discharge can be related to stage alone. (The terms "rating", "rating Curve" and "stage-discharge relation" are synonymous and are used here interchangeably).

Discharge ratings for gauging stations are usually determined empirically by means of periodic measurements of discharge and stage. The discharge measurements are usually made by current meter. Measured discharge is then plotted against concurrent stage on graph paper to define the rating curve. At a new station many discharge measurements are needed to define the stage-discharge relation throughout the entire range of stage. Periodic measurements are needed thereafter to either confirm the permanence of the rating or to follow changes (shifts) in the rating. A minimum of 10 discharge measurements per year is recommended, unless it has been demonstrated that

the stage-discharge relation in unvarying with time. In that event the frequency of measurements may be reduced.

B. Plotting of Rating Curves

Stage-discharge relations are usually developed from a graphical analysis of the discharge measurements plotted on either rectangular coordinate of logarithmic plotting paper. In a preliminary step the discharge measurements available for analysis are tabulated and summarized on a form such as that shown in Exhibit X-1. Discharge is then plotted as the abscissa, corresponding gauge height is plotted as the ordinate, and a curve or line is fitted by eye to the plotted points. The plotted points carry the identifying measurement numbers given in Exhibit X-1; the discharge measurements are numbered consecutively in chronological order so that time trends can be identified.

At gauging stations that use stilling wells, systematic and significantly large differences between inside (recorded) gauge heights and outside gauge heights sometimes occur. For stations where such differences occur, both inside and outside gauge heights are recorded on the form shown in Exhibit X-1, and in plotting the measurement for rating analysis, the outside gauge readings are used first. The stage-discharge relation is drawn through the outside gauge readings. The stage-discharge relation is next transposed to correspond with the inside gauge heights. It is this transposed stage-discharge relation that is used with recorded stages to compute the discharge.

The use of logarithmic plotting paper is usually preferred for graphical analysis of the rating because in the usual situation of compound controls, changes in the slope of the logarithmically plotted rating identify the range in stage for which the individual controls are effective. Furthermore, the portion of the rating curve that is applicable to any particular control may be linearized for rational extrapolation or interpolation. A discussion of the characteristics of logarithmic plotting follows.

The measured distance between any two ordinates or abscissas on logarithmic graph paper, whose values are printed or indicated on the sheet by the

manufacturer of the paper, represents the difference between the logarithms of those values. Consequently, the measured distance is related to the ratio of the two values. Therefore, the distance between pairs of numbers such as 1 and 2, 2 and 4, 3 and 6, 5 and 10, are all equal because the ratios of the various pairs are identical. Thus the logarithmic scale of either the ordinates or the abscissas is maintained if all printed numbers on the scale are multiplied or divided by a constant. This property of the paper has practical value. For example, assume that the logarithmic plotting paper available has two cycles (Figure X-1), and that ordinates ranging from 0.3 to 15.0 are to be plotted. If the printed scale of ordinates is used and the bottom line is called 0.1, the top line of the paper becomes 10.0, and values between 10.0 and 15.0 cannot be accommodated. However, the logarithmic scale will not be distorted if all values are multiplied by a constant. For this particular problem, 2 is the constant used in Figure X-1, and now the desired range of 0.3 to 15.0 can be accommodated. Examination of Figure X-1 shows that the change in scale has not changed the distance between any given pair of ordinates; the position of the ordinate scale has merely been transposed.

We turn now to a theoretical discussion of rating curves plotted on logarithmic graph paper. A rating curve, or a segment of a rating curve, that plots as a straight line of logarithmic paper has the equation.

$$Q = p(G - e)^a \qquad (10.1)$$

where

Q = is discharge;

$(G - e)$ = is sill reference head or depth of water on the control, this value is indicated by the ordinate scale printed by the manufacturer or by the ordinate scale that has been transposed, as explained in the preceding paragraph;

G = is gauge height of the water surface;

e = is gauge height of zero flow for a section control of regular shape, or the gauge height of effective zero flow for a channel control or a section control or irregular shape;

294

p = is a constant that is numerically equal to the discharge when the head (G - e) equals 1.0 ft; and

a = is slope of the rating curve. (Slope in Equation 10.1 is the ratio of the horizontal distance to the vertical distance. This unconventional way of measuring slope is necessary because the dependent variable Q is always plotted as the abscissa).

We assume now that a segment of an established logarithmic rating is linear, and we examine the effect on the rating of changes to the control. If the width of the control increases, p increases and the new rating will be parallel to and to the right of the original rating. If the width of the control decreases, the opposite effect occurs; p decreases and the new rating will be parallel to and to the left of the original rating. If the control scours, e decreases and the depth (G - e) for a given gauge height increases, the new rating moves to the right and will no longer be a straight line but will be a curve that is concave downward. If the control becomes built up by deposition, e increases and the depth (G - e) for a given gauge height decreases; the new rating moves to the left and is no longer linear but is a curve that is concave upward.

When discharge measurements are originally plotted on logarithmic paper, no consideration is given to values of e. The gauge height of each measurement is plotted using the ordinate scale provided by the manufacturer or, if necessary, an ordinate scale that has been transposed as illustrated in Figure X-1A. We refer now to Figure X-2A. The inside scale (e = 0) is the scale printed by the paper manufacturer. Assume that the discharge measurements have been plotted to that scale and that they define the curvilinear relation between gauge height (G) and discharge (Q) that is shown in the topmost curve. For the purpose of extrapolating the relation, a value of e is sought, which when applied to G, will result in a linear relation between (G - e) and Q. If we are dealing with a section control of regular shape, the value of e will be known; it will be the gauge height of the lowest point of the control (point of zero flow). If we are dealing with a channel control of section control of irregular shape, the value of e is the gauge height of effective zero flow. The gauge height of effective zero flow is not the gauge height

of some identifiable feature on the irregular section control or in the channel but is actually a mathematical constant that is considered as a gauge height to preserve the concept of a logarithmically linear head discharge relation. Effective zero flow is usually determined by a method of successive approximations.

In successive trials, the ordinate scale in Figure X-2A is varied for e values of 1, 2 and 3 ft each of which results in a different curve, but each new curve still represents the same rating as the top curve. For example, a discharge of 30 ft^3/s corresponds to a gauge height (G) of 5.5 ft on all four curves. The true value of e is 2 ft, and thus the rating plots as a straight line if the ordinate scale numbers are increased by that value. In other words, while even on the new scale a discharge of 30 ft^3/s corresponds to a gauge height (G) of 5.5 ft, the head or depth on the control for a discharge of 30 ft^3/s is (G - e), or 3.5 ft; the linear rating marked e = 2 crosses the ordinate for 30 ft^3/s at 5.5 ft on the new scale and at 3.5 ft on the manufacturer's, or inside, scale. If values of e smaller than the true value of 2 ft are used, the rating curve will be concave upward, if values of e greater than 2 ft are used, the curve will be concave downward. The value of e to be used for a rating curve, or for a segment of a rating curve, can thus be determined by adding or subtracting trial values of e to be numbered scales on the logarithmic plotting paper until a value is found that results in a straight line plot of the rating. It is important to note that if the logarithmic ordinate scale must be transposed by multiplication or division to accommodate the range of stage to be plotted, that transposition must be made before the ordinate scale is manipulated for values of e.

A more direct solution for e, as described by Johnson (1952) is illustrated in Figure X-2B. A plot of G versus Q has resulted in the solid line curve which is to be linearized by subtracting a value of e from each value of G. The part of the rating between points 1 and 2 is chosen, and values of G_1, G_2, Q_1 and Q_2 are picked from the coordinate scales. A value of Q_3 is next computed, such that

$$Q^2_3 = Q_1 Q_2$$

296

From the solid line curve, the value of G_3 that corresponds to Q_3 is picked. In accordance with the properties of a straight line on logarithmic plotting paper.

$$(G_3 - e)^2 = (G_1 - e)(G_2 - e) \tag{10.2}$$

Expansion of terms in Equation 10.2 leads to Equation 10.3 which provides a direct solution for e.

$$e = \frac{G_1 G_2 - G_3^2}{G_1 + G_2 - 2G_3} \tag{10.3}$$

A logarithmic rating curve is seldom a straight line or a gentle curve for the entire range in stage. Even where a single cross-section of the channel is the control for all stages, a break in slope might be due to the low water control being drowned out by a downstream section control becoming effective or by channel control becoming effective.

The use of rectangular coordinate paper for rating analysis has certain advantages, particularly in the study of the pattern of shifts in the lower part of the rating. A change in the low flow rating at many sites results from a change in the elevation of effective zero flow (e), which means a constant shift in gauge height. A shift of that kind is more easily visualized on rectangular coordinate paper because on that paper the shift curve is parallel to the original rating curve, the two curves being separated by a vertical distance equal to the change in the value of e. On logarithmic paper the two curves will be separated by a variable distance which decreases as stage increases. A further advantage or rectangular coordinate paper is the fact that the point of zero flow can be plotted directly on rectangular coordinate paper, thereby facilitating extrapolation of the low water end of the rating curve. That cannot be done on logarithmic paper because zero values cannot be shown on that type of paper.

As a general rule logarithmic plotting should be used initially in developing the general shape of the rating. The final curve may be displayed on either

type of graph paper and used as a base curve for the analysis of shift. A combination of the two types of graph paper is frequently used with the lower part of the rating plotted on an inset of rectangular coordinate paper or on a separate sheet of rectangular coordinate paper.

Section 4 : Water Monitoring Records

Standard record forms are required for water monitoring records. Several sample forms are included herein as examples and may provide the basis for establishing standards.

Records of Daily Rainfall (Exhibit X-2)

This form is used to record the daily rainfall at rain gauges that are or should be located at major (staffed) water control structures in the system.

The total daily rainfall should be computed from 8:00 am to 8:00 am of the following day unless otherwise defined. For example, the total rainfall for the 31st will be recorded rainfall measured at 8:00 am on the 1st. If the installation of the rain gauge has been disturbed or the instrument itself is damaged or not working properly, it should be reported immediately.

Record of Daily Discharge (Exhibit X-3)

This form is used to record the daily discharge at a structure where flow measurements are made. A separate record is used for each location. The information for this record must be fully complete, it must include a description of the gauge, size, location and other identifying remarks.

Daily Water Report (Exhibit X-4)

This form allows the discharges from all the locations in a system to be consolidated on a single sheet. It will allow the Executive Engineer to monitor conditions quickly throughout the system, advise the Superintending Engineer of conditions, and be able to show farmers and others the system is functioning as required. If the diverted/incoming flows are listed first and

the downstream points in descending order, this will allow the losses to be estimated once the direct outflows to watercourses are accounted for.

DISCHARGE MEASUREMENT SUMMARY SHEET

Station Name:_____

Location:_____

Meas. No.	Date	Made by	Canal Width (ft)	Wetted Area (ft^2)	Mean Velocity (ft/s)	Gage Height		Discharge (cfs)	Meas. Method	No. Sec.	Gage Height Change	Time	Meas. Rated	Water Temp. °C	Remarks
						h_u (ft)	h_d (ft)								

EXHIBIT X-1

EXHIBIT X-2

RECORD OF DAILY RAINFALL

Month_____,19_____

Division:_____

Sub Division:_____

Height of the receiver of the Raingage above the ground_____ft.

Elevation of the Station M.S.L._____ft.

Date	8:00 AM (inch)	5:00 PM (inch)	Total in 24 Hours Beginning 8:00 AM (inch)	Remarks
1				
2				
3				
4				
5				
6				
7				
8				
9				
10				
11				
12				
13				
14				
15				
16				
17				
18				
19				
20				
21				
22				
23				
24				
25				
26				
27				
28				
29				
30				
31				
Ist of next month				

Note: 1. The total daily rainfall could be computed from 8:00 AM to 8:00 AM of the following day. So, the total rainfall on the 31st will be the recorded rainfall at 5:00 PM of the 31st plus the amount of rain recorded at 8:00 AM or the Ist of next month.

2. If the installation of the raingage has been disturbed or the instrument itself is damaged or not working properly, it should be reported immediately.

Recorded by:
Gauge reader

Checked and submitted by:
Sub Engineer

EXHIBIT X-3

RECORD OF DAILY DISCHARGES

Division:_____ Flow Point No:_____

Sub Division:_____ Location:_____

Date	Reading (as found)				Reading (as left)				Remarks
	H_u(ft)	H_d(ft)	Q-(cfs)	Time	H_u(ft)	H_d(ft)	Q-(cfs)	Time	
1									
2									
3									
4									
5									
6									
7									
8									
9									
10									
11									
12									
13									
14									
15									
16									
17									
18									
19									
20									
21									
22									
23									
24									
25									
26									
27									
28									
29									
30									
31									

Note: 1. Only H_u , Q and Time should be recorded unless tail water registers as value for h_d.

2. Indicate under remarks column, any unauthorized adjustments of gate and illegal checking.

Prepared by: Checked and Submitted by:

_____ _____

Guage Reader Sub-Engineer

Division:_____

Circle:_____

DAILY WATER REPORT

_____CANAL SYSTEM

Date: _____, 19

Water Source:_____

Canal Served	Turnout No.	Canal Drawn From	Measuring device		Gage		Head (ft)	Discharge	Gate Opening
			Kind	Size	Upper	Lower			

EXHIBIT X-4

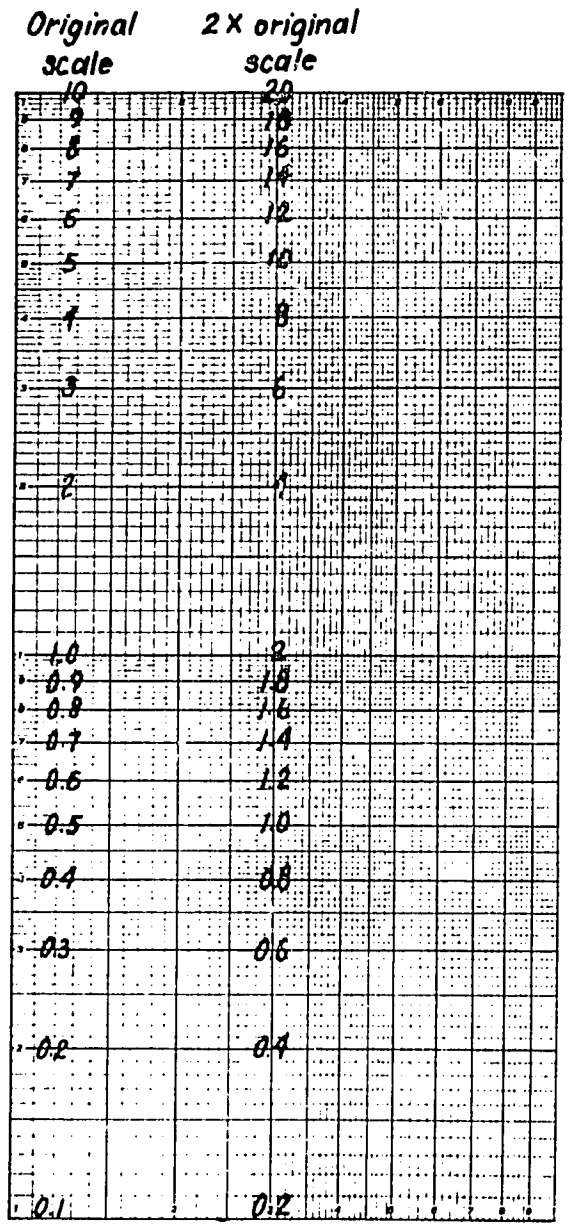

TRANSPOSING LOGARITHMIC SCALES

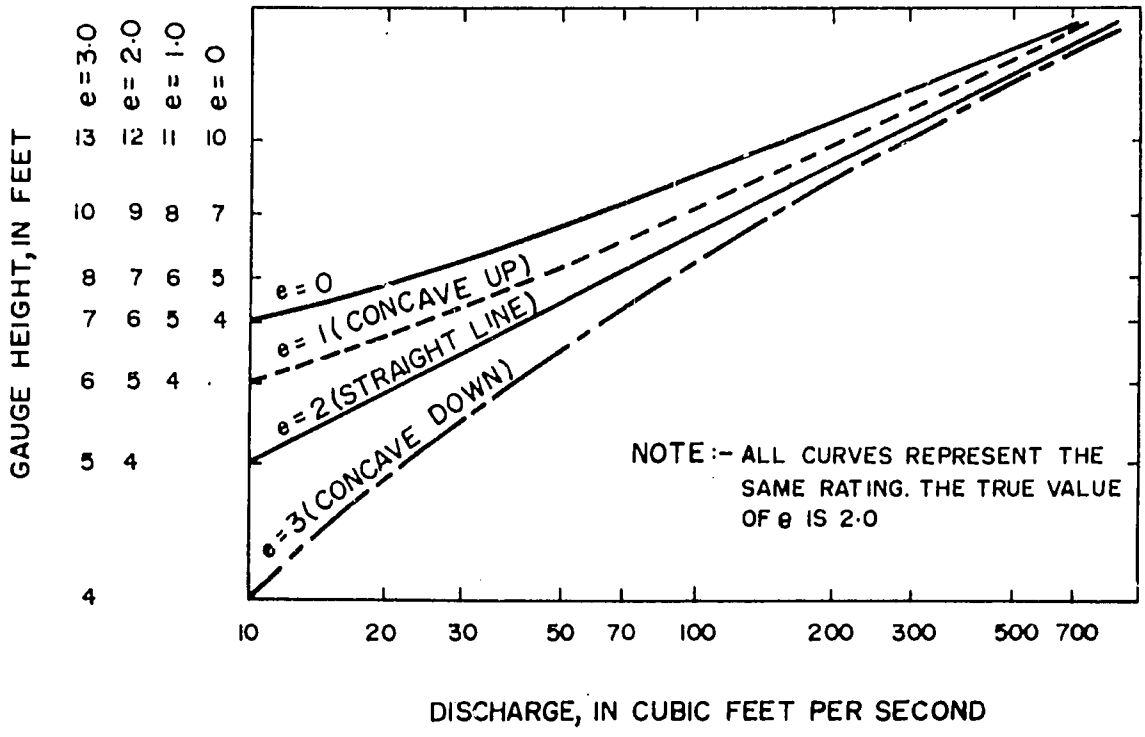

FIG. A. RATING-CURVE SHAPES RESULTING FROM THE USE OF DIFFERING VALUES OF EFFECTIVE ZERO FLOW

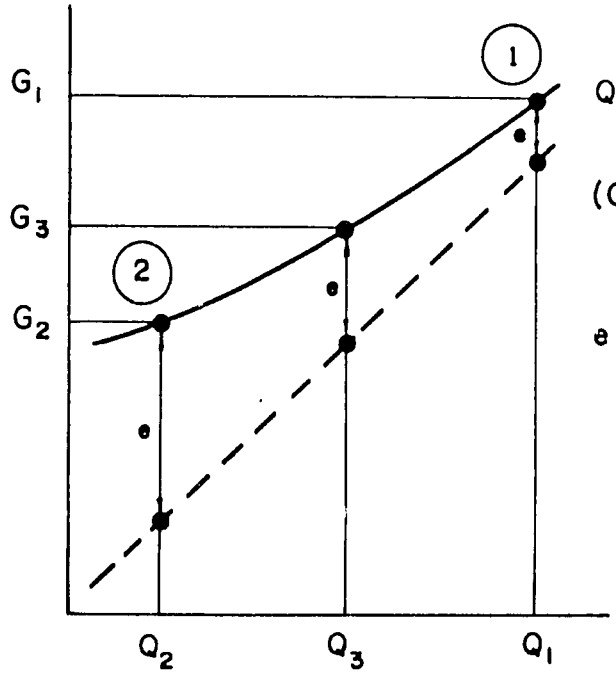

$$Q_3^2 = Q_1 \, Q_2$$

$$(G_3 - e)^2 = (G_1 - e)(G_2 - e)$$

$$e = \frac{G_1 \, G_2 - G_3^2}{G_1 + G_2 - 2G_3}$$

FIG. B. SCHEMATIC REPRESENTATION OF THE LINEARIZATION OF A CURVE ON LOGARITHMIC GRAPH PAPER

ADJUSTING FOR GAUGE ZERO

CHAPTER XI

METRIGATION

CHAPTER XI
METRICATION

A. Introduction

The purpose of this chapter is to facilitate the transition to use of the "International System of Units" (SI) and to provide guidance in their use. The metric system of measurement is referred to as SI. This chapter presents basic information on SI and its usage as it pertains to hydraulics and irrigation. Included are the recommended units prepared in a form convenient to engineers. The units as presented are based on those adopted by the 1975 General Conference on Weights and Measures (CGPM).

Pakistan has adopted the metric system of measurement but has not yet converted to its usage in all government agencies. The Provincial Irrigation Departments are still using the English system of units. The on-farm water management organizations have already converted their design procedures to the metric system so their units of flow are either liters per second (l/s) or cubic meters per second (m^3/s).

It has been assumed that the conversion to metric units of discharge will eventually be made in the Provincial Irrigation Departments. Many of the equations used in flow hydraulics are the same for either systems of units. For example, the "n" values for roughness used in the Manning equation are the same for both systems.

The discharge coefficient in certain equations has units and must be converted accordingly.

B. SI Units and Symbols

SI units are of three classes: base units, supplementary units, and derived units. The seven base units are considered to represent independent physical quantities, while the two supplementary units may be regarded as either independent or derived. These units are:

Quantity	Unit	SI Symbol
Base Units:		
length	meter	m
mass	kilogram	kg
time	second	s
electric current	ampere	A
thermodynamic temperature	kelvin	K
amount of substance	mole	mol
luminous intensity	candela	cd
Supplementary Units:		
plane angle	radian	rad
solid angle	steradian	sr

Derived units are obtained by combining base units, supplementary units, and other derived units, and the symbols for derived units include mathematical notations for multiplication, division, and exponents (The SI units for velocity, e.g., is meter per second, expressed as m/s or $m.s^{-1}$.

In using SI terms, distinct units are used for mass and force. The kilogram is unit of mass and the newton is the unit of force. The newton is used to form derived units which include force, e,g.,: pressure or stress (N/m^2 = Pa), energy (N.M = J), and power (N.m/s = W).

Derived SI units having names and symbols approved by the CGPM are presented in Table XI-1.

C. Order of Magnitude

Prefixes and symbols for prefixes used to form names and symbols of decimal multiples and submultiples at SI units are shown in Table XI-2.

The prefixes (or their symbols) shown in Table IX-2 are attached to names or symbols of SI units. Strictly speaking, they are used to form multiples and submultiples of SI units, but in common usage the SI unit together with its prefix is referred to as a SI unit; e.g., millimeter, kilogram and megawatt.

Use of prefixes provides a convenient alternative to the powers of ten notation and eliminates use of nonsignificant zeros and leading zeros in decimal fractions. For example, 12,300 mm is written as 12.3 m.

Preferably, prefixes should be chosen so that the numerical value lies between 0.1 and 1,000. To minimize variety, use of prefixes representing powers of 1,000 are preferred. However, other prefixes are sometimes desireable, as when the prefixes hecto-, deka-, deci-, and centi- are required to express area and volume (e.g., square hectometer or cubic centimeter) in tables in which it is preferable to use the same unit multiple throughout, and in cases when a particular multiple is customarily used (e.g., millimeter is used for linear dimensions in design of mechanical equipment.

Only one prefix should be used in forming a multiple of a compound unit. For example, use nanometer (nm), not micromillimeter (μmm), and use gigawatt (GW), not kilomegawatt (kNW). If a value is required outside the range covered by the prefix, then it should be expressed as a power of ten applied to the base unit. For example, to express one kilometer in meters, use 10^3 m. In compound units, the prefix normally is attached to the unit in the numerator, as in cm/s or cm/m, except in the case of the kilogram which is one of the basic SI units. When an exponent is attached to a symbol with a prefix, that unit (with the prefix) is raised to the power of ten, as in 1 $cm^3 = (10^{-2}\ m)^3 = 10^{-6}\ m^3$.

D. Special Unit Used with SI

To preserve the advantage of SI as a coherent system, it is recommended that use of units from other systems be minimized. Units accepted for use with SI, some for only limited use in special cases, are examined in the following and summarized in Table XI-3.

Time - The SI unit of time is the second, but minute, hour, day and other calendar units are used when appropriate.

Plane Angle - The SI unit for plane angle is the radian, but degree (and its decimal submultiples) is acceptable when the radian is not a convenient unit.

The use of minute and second is discouraged except in special fields, such as cartography.

Temperature - Although the SI unit of temperature is the Kelvin (K), degree Celsius (° C) is widely used. The Celsius scale was formerly called the centigrade scale. One kelvin equals one degree Celsius, but zero degrees Celsius equals 273.15 kelvins.

Volume - The SI unit of volume is the cubic meter, with regularly formed multiples such as the cubic centimeter. The special term liter was approved for the cubic decimeter by the CGPM in 1964, but its use is restricted to the measurement of liquids and gases. No prefix other than milli- should be used with liter.

Mass - The SI unit of mass is the kilogram. Kilogram, gram, or units with prefixes attached to gram (e.g., megagram or milligram) are preferred. The megagram (Mg) is used for large masses such as those expressed in tons in the inch-pound system. The term metric ton (1,000 kg) should be restricted to commercial usage, and no prefix should be used with it.

Energy - The SI unit of energy, the joule, is preferred; however, the kilowatthour is widely used. In the long run, it is recommended that kilowatthour eventually be replaced by megajoule.

Area - The SI unit of area is the square meter (m^2), with square hectometer (hm^2) and square kilometer (km^2) used for large areas. The term hectare (square hectometer) is limited to measurement of land or water areas.

Pressure and Stress - The SI unit of pressure and stress is the pascal (newton per square meter). This unit should replace old metric units such as kilogram force per square centimeter. The millibar, widely used in meteorology, should continue to be used within the profession for the present, but it is recommended that the kilopascal be used in presenting meteorological data to the public

Units from different systems used with SI and units accepted for limited use are shown in Table XI-3.

E. Usage and Writing Style with SI Units

International agreement covers rules for uniform usage of SI terms, but differences in language result in some difference in writing style.

In the United States, a period is used as the decimal marker, but in many other countries a comma is used. A comma is used in the United States to separate groups of three digits, which results in confusion. For clarity, it is recommended that the decimal market be a point on the line (period) and that digits be separated into groups of three by a space, with no comma, counting from the decimal point to the right and to the left. For numbers of less than four digits, the spacing is optional. For numbers less than one, a zero is used before the decimal point. For example:

5 280 196

5.280 20

5280 or 5 280

0.52

In the United States, unit symbols are used in the singular, not the plural (e.g., 5 m). Symbols are not followed by a period, except at the end of a sentence. Symbols are written in lower case, excepc when the unit name is derived from a proper name. A space is left between the numerical value and unit symbols (e.g., 35 mm), except with units of plane angle expressed in degree, minute, and second, and with degree Celsius. There is no space between a prefix and the unit symbol (e.g., km). Multiplication of units, when written as symbols, is indicated by a heavy raised dot (e.g., N.m) while division is indicated by using a negative exponent (e.g., $m.s^{-2}$) or a solidus (e.g., m/s^2).

In writing out the names of SI units, the first letter of the unit is no capitalized except at the beginning of a sentence. Plurals are formed regularly, but the units lux, hertz, and siemens are the same in singular and plural. No space or hyphen is used between the prefix and unit name.

Products of multiplication are written using a space (newton meter) or a hyphen (newton-meter). In indicating division, use the word per and not a solidus.

F. Conversion to SI Units

In converting quantities from one system of units to another, care must be taken to retain a sufficient number of significant digits to reflect the accuracy of the original quantity. Accurate conversions, obtained by using conversion factors, generally imply a greater accuracy than the original value, and the converted number should, therefore, be rounded.

Table XI-4 presents factors to convert units commonly used in hydraulics to SI, arranged by the type of physical quantity. The factors are shown to four significant figures and, where appropriate, the digits are followed by the letter EXP (for exponent), a plus or minus symbol, and a digit indicating the power-of-ten by which the number must be multiplied to obtain the correct value.

Numerical value in the SI system for gravitational acceleration, atmospheric pressure, and properties of water at representative temperatures are listed in Table XI-5.

G. Use of Hydraulic Equations

In using hydraulic structures for measuring water one must be very careful with the discharge coefficients because they are not all dimensionless. The discharge coefficient C_d for weirs has the dimensions ($L^{\frac{1}{2}}\ T^{-1}$) so that a correction factor must be applied when transferring from English to SI. The conversion factor to go from English units to SI is $(1/3.28)^{0.5} = 0.552$.

The discharge coefficient for orifice flow is dimensionless. The same is true for the approach velocity coefficients, C_v.

The roughness coefficient n in the Manning equation originally had units. Therefore, a unit coefficient ,C, is used in the English unit version of the equation. The units originally contained in the value of n were ($L^{-1/3}\ T$).

Since $C = (3.2808)^{0.333} = 1.486$ or 1.49 is used in the English version of Manning's equation, the values of n are to be considered dimensionless. The metric version of Manning's equation is

$$V = \frac{R^{2/3} S^{1/2}}{n} \tag{12.1}$$

Where

V = velocity of water - m/s

R = hydraulic radius - m

S = slope - m/m

n = coefficient of roughness - (dimensionless in that standard roughness tables are used for both English and SI)

The velocities determined by current meter measurements will have to be reduced by the factor 0.3048 to convert the readings to m/s.

Other measuring structure equations should be checked to determine whether or not the discharge coefficients are dimensionless or dimensional. The appropriate conversions can then be made.

TABLE XI - 1
DERIVED SI UNITS

DISTINCT UNITS

Quantity	Unit	Symbol	Formula
frequency (of a periodic phenomenon	hertz	Hz	1/s
force	newton	N	$kg \cdot m/s^2$
pressure, stress	pascal	Pa	N/m^2
energy, work, quantity of heat	joule	J	N·m
power, radiant flux	watt	W	J/s
Quantity of electricity, electric charge	coulomb	C	A·s
Electric potential, potential difference, electromotice force	volt	V	W/A
capacitance	farad	F	C/V
electric resistance	ohm	Ω	V/A
conductance	siemens	S	A/V
magnetic flux	weber	Wb	V·s
magnetic flux density	tesla	T	Wb/m^2
inductance	henry	H	Wb/A
luminous flux	lumen	lm	cd·sr
illuminance	lux	lx	lm/m^2
activity (of radionuclides)	Becquerel	Bq	1/s
absorbed dose	gray	Gy	J/kg

COMPLEX UNITS

Quantity	Unit	Symbol
acceleration	meter per second squared	m/s^2
angular acceleration	radian per second squared	rad/s^2
Angular velocity	radian per second	rad/s
area	square meter	m^2
concentration (of amount of substance)	mole per cubic meter	mol/m^3
current density	ampere per square meter	A/m^2
density, mass	kilogram per cubic meter	kg/m^3
electric charge density	coulomb per cubic meter	C/m^3
electric field strength	volt per meter	V/m
electric flux density	coulomb per square meter	C/m^2
energy density	joule per cubic meter	J/m^3
entropy	joule per kelvin	J/K
heat capacity	joule per kelvin	J/K
heat flux density, irradiance	watt per square meter	W/m^2
luminance	candela per square meter	cd/m^2

TABLE XI - 1
(continued)

magnetic field strength	ampere per meter	A/m
molar energy	joule per mole	J/mol
molar entropy, molar heat capacity	joule per mole kelvin	j/(mol·K)
moment of force	newton meter	n m
permeability	henry per meter	H/m
permittivity	farad per meter	F/m
radiance	watt per square meter steradian	$W/(m^2 \cdot sr)$
radiant intensity	watt per steradian	W/sr
specific heat capacity	joule per kilogram kelvin	J/(kg·K)
specific energy	joule per kilogram	J/kg
specific entropy	joule per kilogram kelvin	J/(kg·K)
specific volume	cubic meter per kilogram	m^3/kg
surface tension	newton per meter	N/m
thermal conductivity	watt per meter kelvin	W/(m·K)
velocity	meter per second	m/s
viscosity, dynamic	pascal second	Pa·s
viscosity, kinematic	square meter per second	m^2/s
volume	cubic meter	m^3
wave number	1 per meter	1/m

TABLE XI - 2

PREFIXES AND SYMBOLS FOR PREFIXES USED TO FORM NAMES AND SYMBOLS OF DECIMAL MULTIPLES AND SUBMULTIPLES OF SI UNITS

Multiplication Factor			Prefix	Symbol
1,000,000,000,000,000.000	=	10^{18}	exa[a]	E
1,000,000,000,000.000	=	10^{15}	peta[a]	P
1,000,000,000.000	=	10^{12}	tera	T
1,000,000.000	=	10^{9}	giga	G
1,000.000	=	10^{8}	mega	M
1.000	=	10^{3}	kilo	k
100	=	10^{2}	hecto[b]	h
10	=	10^{1}	deka[b]	da
0.1	=	10^{-1}	deci[b]	d
0.01	=	10^{-2}	centi[b]	c
0.001	=	10^{-3}	milli	m
0.000.001	=	10^{-6}	micro	μ
0,000,000.001	=	10^{-9}	nano	n
0,000,000,000.001	=	10^{-12}	pico	p
0,000,000,000,000.001	=	10^{-15}	femto	f
0,000,000,000,000,000,001	=	10^{-18}	atto	a

[a] Adopted by the CGPM in 1975

[b] To be avoided except in special cases, such as tabulations (see text)

TABLE XI - 3
UNITS FROM DIFFERENT SYSTEMS USED WITH SI AND UNITS ACCEPTED FOR LIMITED USE

Quantity	Unit	Symbol	Definition
		(a) Accepted	
Time	minute	min	1 min = 60 s
	hour	h	1 h = 60 min = 3,600 s
	day	d	1 d = 24 h = 86,400 s
	week, month etc	-	
Plane angle	degree	°	$1° = (\Pi/180)$ rad
Temperature	degree Celsius	°C	
Volume	liter[a]	L	$1\ L = 1\ dm^3 = 10^{-3}\ m^3$
Mass	metric ton	t	$1\ t = 10^3$ kg
		(b) Accepted for limited use	
Plane angle	minute	'	$1' = (1/60)° = (\Pi/10{,}800)$rad
	second	"	$1'' = (1/60)' = (\Pi/648{,}000)$rad
Energy	kilowatthour	kWh	1 kWh = 3.6 MJ
Area	barn	b	$1\ b = 10^{-28}\ m^2$
	hectare	ha	$1\ ha = 1hm^2 = 10^4\ m^2$
Pressure	bar	bar	$1\ bar = 10^5$ Pa
Activity (of radionuclides)	curie	Ci	$1\ Ci = 3.7 \times 10^{10}$ Bq
Exposure	roentgen	R	$1\ R = 2.58 \times 10^{-4}$ C/kg
Absorbed dose	rad	rd	1 rd = 0.01 Gy

Note: ([a]) Because of similarity between lower case letter l and number 1 in many type faces, it is recommended that liter be written in full of an upper case L.

TABLE XI - 4

CONVERSION TO SI UNITS FOR PHYSICAL QUANTITIES FREQUENTLY USED IN WATER RESOURCES PRACTICE

To Convert from	Multiply by	To obtain	Units
Aceleration			
foot/second^2	0.304 8	meter/second^2	m/s^2
Area			
acre	4,047	meter^2	m^2
square foot	0.092 90	meter^2	m^2
hectare	1.000 Exp + 4	meter^2	m^2
square inch	6.452 Exp - 4	meter^2	m^2
mile^2	2.590 Exp + 6	meter^2	m^2
yard^2	0.836 1	meter^2	m^2
Bending moment or torque or moment of force			
foot-pound$_{force}$	1.356	newton-meter	N · m
Capacity (see volume)			
Concentration			
part/million	1.0	milligrams/liter	mg/L
Density (see mass/volume)			
Discharge (see volume/time)			
Electricial conductivity			
micromho/centimeter	1.0	microsiems/centimeter	µs/cm
Energy or work			
BTU	1,055	joule	J
calorie	4.187	joule	J
foot-pound$_{force}$	1.356	joule	J
killowatt-hour	3.600 Exp + 6	joule	J
Energy/area·time			
BTU/square foot-second	1.135 Exp + 4	watt/meter^2	W/m^2
BTU/square foot-hour	3.152	watt/meter^2	W/m^2
calorie/cm^2-minute	697.3	watt/meter^2	W/m^2
Flow rate (see mass/time or volume/time)			
Force			
dyne	1.000 Exp - 5	newton	N
kilogram$_{force}$	9.807	newton	N
kip	4,448	newton	N
pound$_{force}$	4.448	newton	N
Force/area (see pressure)			
Heat			
BTU/square foot	1.136 Exp + 4	joule/meter^2	J/m^2
BTU/hour-square foot °F	5.678	watt/meter^2-kelvin	W/m^2·K
BTU/pound$_{mass}$	2,326	joule/kilogram	J/kg
BTU/pound$_{mass}$ °F	4,187	joule/kilogram-kelvin	J/kg·K
BTU/second-square foot °F	2.044	Watt/meter^2-kelvin	W/m^2·K
calorie/cm^2	4.184 Exp + 4	joule/meter^2	J/m^2
calorie/gram	4,187	joule/kilogram	J/kg
calorie/gram °C	4,187	joule/kilogram-kelvin	J/kg·K
Hydraulic conductivity			
foot/day	0.304 8	meters/day	m/day

TABLE XI-4
(continued)

Length			
foot	0.304 8	meter	m
inch	0.02 540	meter	m
mile, nautical	1,852	meter	m
mile	1,609	meter	m
yard	0.914 4	meter	m
Mass			
$pound_{mass}$(avoird.)	0.453 6	kilogram	kg
slug	14.59	kilogram	kg
ton(long,2,240 lb_m)	1,106	kilogram	kg
ton(short,2,000 lb_m)	907.2	kilogram	kg
ton(metric)	1,000	kilogram	kg
Mass/time			
$pound_{mass}$/second	0.453 6	kilogram/second	kg/s
Mass/volume or density			
gram/cm	1,000	kilogram/meter^3	kg/m^3
$pound_{mass}$/foot	16.02	kilogram/meter^3	kg/m^3
$pound_{mass}$/gallon	119.8	kilogram/meter^3	kg/m^3
slug/cubic foot	515.4	kilogram/meter^3	kg/m^3
Permeability (see hydraulic conductivity)			
Power			
BTU/second	1,054	watt	W
BTU/minute	17.57	watt	W
BTU/hour	0.293 1	watt	W
calorie/second	4.184	watt	W
calorie/minute	0.069 73	watt	W
foot-$pound_{force}$/second	1.356	watt	W
horsepower(550 ft-lb_f/s)	745.7	watt	W
horsepower(electric)	746.0	watt	W
horsepower(water)	746.0	watt	W
Pressure or stress or force/area			
atmosphere	1.013 Exp + 5	pascal	Pa
bar	1.000 Exp + 5	pascal	Pa
dyne/cm^2	0.100 0	pascal	Pa
foot of water(39.4°F)	2.989	pascal	Pa
$gram_{force}$/cm^2	98.07	pascal	Pa
inch of mercury	3,386	pascal	Pa
inch of water(39.4°F)	249.1	pascal	Pa
$kilogram_{force}$/meter^2	9.807	pascal	Pa
kip/square inch	6.895 Exp + 6	pascal	Pa
milibar	100	pascal	Pa
millimeter of mercury	133.3	pascal	Pa
$pound_{force}$/square foot	47.88	pascal	Pa
$pound_{force}$/square inch	6,895	pascal	Pa

TABLE XI - 4
(continued)

Specific capacity			
(gallon/minute)per foot drawdown	12.42	(liter/minute) per meter	(L/min/m
Stress (see pressure)			
Temperature			
degree Celsius	273.15	kelvin	K
degree Fahrenheit	495.67 + 1.8	kelvin	K
degree Rankine	+ 1.8	kelvin	K
degree Fahrenheit	-32 + 1.8	degree Celsius	°C
Time			
day	8.640 Exp + 4	second	s
hour	3,600	second	s
minute	60.00	second	s
month(mean calendar)	2.628 Exp + 6	second	s
year(calendar)	3.154 Exp + 7	second	s
Torque(see bending moment)			
Transmissivity			
(gallon/day)/foot	0.012 42	(meter^3/day)/meter	(m^3/day)/m
Velocity or speed			
foot/second	0.304 8	meter/second	m/s
foot/minute	0.005 080	meter/second	m/s
foot/hour	8.467 Exp - 5	meter/second	m/s
kilometer/hour	0.227 8	meter/second	m/s
mile/hour	0.447 0	meter/second	m/s
Viscosity			
centipose	0.001,000	pascal-second	Pa s
centistoke	1.00 Exp - 6	meter^2/sceond	m^2/s
square foot/second	0.092 90	meter^2/second	m^2/s
poise	0.100 0	pascal/second	Pa s
pound$_{force}$-second/ square foot	47.88	pascal/second	Pa s
slug/foot-second	47.88	pascal/second	Pa s
stoke	1.000 Exp - 4	meter^2/second	m^2/s
Volume of capacity			
acre-foot	1,233	meter^3	m^3
1,000 acre-foot	1.234	hectometer^3	hm^3
barrel (oil,42 gal)	0.159 0	meter^3	m^3
board foot	0.002 360	meter^3	m^3
bushel (U.S.)	0.035 24	meter^3	m^3
cubic foot	0.028 32	meter^3	m^3
gallon (U.S. liquid)	0.003 785	meter^3	m^3
cubic inch	1.639 Exp - 5	meter^3	m^3
liter	0.001 000	meter^3	m^3
cubic yard	0.764 6	meter^3	m^3

TABLE XI-4
(continued)

Volume/time or discharge or flow rate			
cubic foot/second	0.028 32	meter^3/second	m^3/s
cubic foot/minute	4.719 Exp - 4	meter^3/second	m^3/s
gallon/minute	6.309 Exp - 5	meter^3/second	m^3/s
gallon/day	4.381 Exp - 8	meter^3/second	m^3/s
	3.785	liters/day	L/day
Water application			
acre-foot/acre	0.304 8	meter^3/meter^2	m^3/m^2
Work (see energy)			

TABLE XI - 5

VALUES FOR PHYSICAL PROPERTIES

Quantity	Si System
Gravitational acceleration	
g(standard, free fall)	9.807 m/s^2
Density of water	
ρH_2O at 50°F/10°C	1.000 kg/m^3
Specific weight of water	
H_2O at 50°F/10°C	9.807 kN/m^3
Dynamic viscosity of water	
μH_2P at 50°F/10°C	1.30×10^{-3} Pa·s
at 70°F/20°C	1.00×10^{-3} Pa·s
Kinematic viscosity of water	
γH_2O at 50°F/10°C	1.30×10^{-6} m^2/s
at 70°F/20°C	1.00×10^{-6} m^2/s
Atmospheric pressure	
p(standard)	101.3 kPa

APPENDIX A

REFERENCES

APPENDIX A

REFERENCES

BOS, M.G., Replogle, J.A. and Clemmens, A.J. 1984. Flow Measuring Flumes for Open Channel Systems, John Wiley & Sons, New York.

Chow, V.T. 1959. Open-Channel Hydraulics, McGraw-Hill Book Co., New York.

Mahbub, S.I., Gulhati, N.D., 1951. Irrigation outlets, Atma Ram & Sons, Delhi.

Public Work Department, 1943. Manual of Irrigation Practice, Reprint 1963, Government Printing, West Pakistan.

BOS, M.G., Ed. 1978. Discharge Measurement Structures. 2nd Ed. Publication No.20, International Institute for Land Reclamation and Improvement/ ILRI, Wageningen, The Netherlands.

U.S.B.R, 1974, Water Measurement Manual. 2nd Ed., U.S. Department of Interior, Bureau of Reclamation, Denver Colorado.

Rantz, S.E., and others, 1982. Measurement and Computation of Streamflow: Volume 1. Measurement of Stage and Dishcarge, Volume 2. Computation of Discharge. Geological Survey Water Supply Paper 2175. U.S. Department of Interior, Geological Survey, Washington D.C.

Utah State University, 1967. Design and Calibration of Submerged Open Channel Flow Measurement Structures, Four Parts, Utah Water Research Laboratory, College of Engineering, Utah State University, Logan Utah.

King, H.W., and Brater, E.F. 1954. Handbook of Hydraulics. 5th Edition McGraw-Hill Book Co., New York.

Skogerboe, G.V., Shafique, M.S. and Gandarillas, C, 1986. Field Calibration of Irrigation Structures for Discharge Measurement, International Irrigation Center, Department of Agriculture and Irrigation Engineering, Utah State University, Logan Utah.

PRC Engineering/Checchi, 1986. Technical Criteria For Rehabilitation of Canal Systems In Pakistan, Lahore.