PN-ABF-594

67157

WORKSHOP PROCEEDINGS

Supplying Quality Multinutrient Fertilizers in the Latin American and Caribbean Region – Emphasizing Bulk Blending and the Complementary Role of Granulation

Guatemala City, Guatemala
October 10-13, 1989

Edited by

J. J. Schultz
E. D. Frederick

International Fertilizer Development Center

Library of Congress Cataloging-in-Publication Data

Supplying quality multinutrient fertilizer in the Latin American and Caribbean region emphasizing bulk blending and the complementary role of granulation : workshop proceedings, Guatemala City, Guatemala, October 10-13, 1989 / edited by J.J. Schultz, E.D. Frederick.
p. cm.
The workshop was developed by the International Fertilizer Development Center.
Includes bibliographical references.
ISBN 0-88090-089-X
1. Fertilizers--Latin America--Congresses. 2. Fertilizers--Caribbean Area--Congresses. I. Schultz, J. J., 1936- II. Frederick, E. D. III. International Fertilizer Development Center. IV. Title: Workshop proceedings.
TP963.S86 1990
338.4'766862'09729 - dc20 90-4560
CIP

International Fertilizer Development Center
P.O. Box 2040
Muscle Shoals, Alabama 35662

Phone No. 205-381-6600
TWX-810-731-3970 IFDEC MCHL
Telefax: (205)381-7408

IFDC publications are listed in *IFDC Publications - 1990*, General Publication IFDC - G-1, which is available free of charge.

Preface

This workshop in Guatemala was developed by IFDC as a result of a prior initiative in Asia. In early 1988, IFDC organized a workshop in India to explore the alternatives for manufacturing and supplying multinutrient (NPK) fertilizers in the Asian region. The General Manager of FERQUIGUA (Guatemala) was among the invited speakers at the Indian workshop.

Although many NPK production technologies were examined at the Indian workshop, the delegates expressed an unusual amount of interest in the unique approach reported by FERQUIGUA, who uses compaction/granulation as a complementary technology to improve the cost effectiveness of their bulk-blending operation while also supplying homogeneous compacted NPKs to a certain segment of the market that did not prefer blended products.

This high level of interest led to the idea of organizing a similar workshop in a region where blending has had a long and successful history–the Latin American and Caribbean region. The result was this workshop, where we examined not only the current status of bulk-blending practices in the region but also the complementary role that granulation, including compaction, plays in improving the feasibility, cost effectiveness, and marketing of blended fertilizers.

International Fertilizer Development Center
Workshop Staff–

James J. Schultz, Manager

Ram S. Giroti, Administrator

Ramon Lazo de la Vega, Coordinator

Acknowledgments

The management of IFDC is grateful to our host, Fertilizantes Quimicos de Guatemala (FERQUIGUA), for the support and assistance provided in organizing and carrying out this workshop.

We are also deeply indebted to the large number of speakers who freely gave of their time to participate in the workshop and share their experiences.

Finally, the workshop could not have been the success it was without the contributions of the large number of delegates who participated enthusiastically in the discussions and so positively added to the body of knowledge recorded in these proceedings.

David B. Parbery
Managing Director
INTERNATIONAL FERTILIZER
DEVELOPMENT CENTER

April 1990

Inaugural Session

James J. Schultz, Fertilizer Production Specialist and Workshop Manager, International Fertilizer Development Center (IFDC) – United States

The following opening remarks were made by Mr. James J. Schultz, IFDC Fertilizer Production Specialist and Workshop Manager.

> Good morning ladies and gentlemen! On behalf of our host, Fertilizantes Quimicos de Guatemala (FERQUIGUA), and the management of IFDC, it gives me a great deal of pleasure to welcome each of you to this workshop. The list of delegates and invited speakers is impressive, including 75 persons from 20 countries.
>
> Before going further, please let me introduce my IFDC colleagues who will be assisting throughout the proceeding to ensure that your needs and expectations are met. First, meet Mr. Ram S. Giroti. Mr. Giroti is IFDC's Training Administrator. Mr. Giroti is responsible for the overall administration of IFDC's training initiative which includes the production of 12-15 training programs and workshops annually. Second, please meet Mr. Ramon Lazo de la Vega. Mr. Lazo de la Vega is a Special Project Engineer (Chemical Engineer) with a great deal of experience in fertilizer blending and compaction, especially as it pertains to the Central and South American region. I know you will come to appreciate the unique skills of these two gentlemen as they help guide us through the next several days of deliberations. I also want to draw your attention to the simultaneous translation service that was so kindly organized by our host.
>
> Now, before getting into the technical program, I am pleased to introduce Mr. Cristian Rodriguez and Mr. Mark A. Swisher who will officially open this workshop and welcome you to Guatemala on behalf of FERQUIGUA, our host.

Mr. Rodriguez and Mr. Swisher then proceeded to welcome the delegates and gave a brief overview of the events leading to the collaboration between FERQUIGUA and IFDC in organizing and hosting the workshop.

Workshop Objectives

James J. Schultz, Fertilizer Production Specialist and Workshop Manager, International Fertilizer Development Center (IFDC) – United States

Before we begin the technical program, please let me take a few minutes to share with you an overview of the role of fertilizer in the region and focus on the major objectives we will strive to meet.

The Latin American and Caribbean region accounts for almost 7% of the world's fertilizer consumption while local production – mostly nitrogen and phosphate products – amounts to slightly less than 4% of the world's total.

With specific reference to multinutrient (NPK) fertilizers, worldwide production of homogeneous granular NPKs continues to show moderate growth – about 55 million tonnes of product in 1980 compared with about 60 million tonnes today. This amounts to about 15% of the world's total annual product tonnage. The homogeneous granular NPKs are complemented annually by about 25 million tonnes of binary nutrient materials (for example, products such as 18-46-0 and 20-20-0), about 280 million tonnes of single nutrient products, and about 30 million tonnes of fluids. Thus, the world's total annual production of fertilizer products amounts to nearly 400 million tonnes (Figure 1).

Relatively large amounts of the basic single and binary nutrient materials are blended before finally reaching the farm gate. Granular NPKs, too, are often used as feedstock by the blender. Although difficult to determine precisely, worldwide production of blends is estimated at about 20 million tonnes annually. About 60% of this production of blends occurs in Canada and the United States, while an additional 15%-20% is estimated to occur in the Latin American/Caribbean region with Brazil as the leader (Figure 2).

The assembled delegates, speakers, and technical resource persons at this workshop will focus the discussions on available avenues of supply and the problems encountered in providing the desired NPKs to the farmers of the region. The workshop deliberations will examine a broad range of NPK supply alternatives with emphasis on the following topics:

- Current and projected role of fertilizers in the region.
- Relating fertilizer products to farmer needs – marketing NPKs.

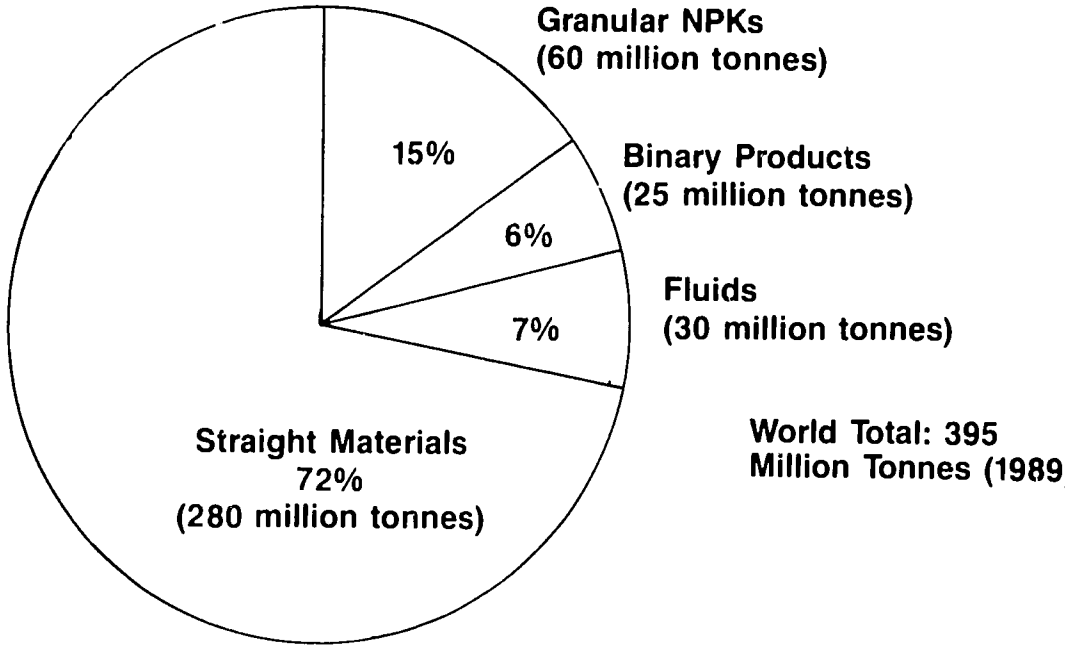

Figure 1. Total World Fertilizer Production by Major Product Type.

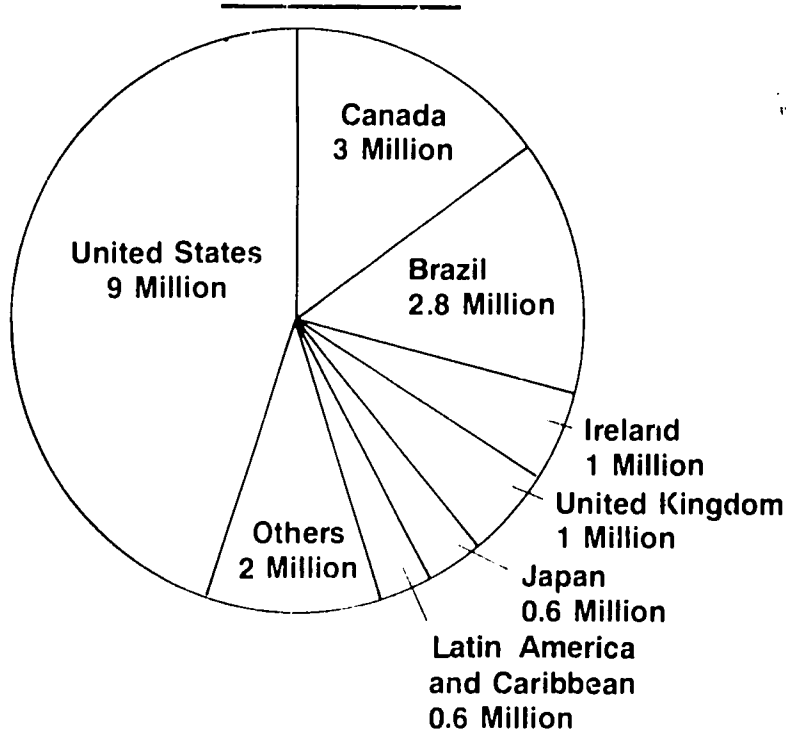

Figure 2. Estimated World Production of Blended Fertilizers (Bulk Blends).

- A review of fertilizer supply options for the region.
- Raw material sources.
- Unique features of bulk blending and its application in the region.
- Technical/economic aspects of bulk blending.
- Pressure-roll compaction as an alternative to other granulation methods.
- Examples of the complementary role played by granulation in a bulk-blending supply system.
- Case studies of bulk blending and pressure-roll compaction in the region.

Please let me remind you that this is a workshop; therefore, we encourage each of you to actively participate in the discussions. It is through such candid and uninhibited dialogue that the value of this meeting will accrue. The invited papers have been selected to cover a broad range of topics and experiences. They should serve as the catalyst for thought, discussion, and learning. We have a full agenda before us, so let us begin with the keynote address by Mr. Fernando Encinas of the Chilean Nitrate Corporation, who represents one of the oldest fertilizer producers in the world.

Table of Contents

	Page
Keynote Address Uniqueness – The Key to Survival *Fernando Encinas*	1
Latin American Fertilizer Perspective, 1960-95 *Balu L. Bumb*	14
NPKs in Perspective – Relating Fertilizer Products to Farmer Needs in Latin America *L. A. León*	20
Agronomic and Economic Evaluation of Phosphorus Sources *L. A. León and A. Martínez*	31
Micronutrients in Latin American Agriculture – An Overview of the Basic Concepts *James M. Wyatt*	46
North American Raw Material Supply Options and Outlook for the Caribbean and Latin American Region *Garry L. Pigg*	43
Development of Compaction and Bulk Blending in Guatemala *C. M. Rodriguez*	72
Selling Bulk-Blend Concept in Guatemala *Mark A. Swisher*	83
Bulk-Blended Fertilizers in the Dominican Republic – Fertilizantes Quimicos Dominicanos, S.A. (FERQUIDO): A Case Study *Marcial Najri*	90
Colombia – The Commercial Rationale for Blending *William Bastian*	101

A Fertilizer Bulk-Blending Plant in Haiti – The Analysis of a Failure 112
C. John Currelly

Production and Marketing of Compacted NPKs in Switzerland: Rationale and Results 121
A. Sutter

Fertilizer Blending in Ireland – Potential Application of Its Unique Features to Developing Country Locations 142
J. E. Leonard and T. M. Young

Integrated Approach to a Fertilizer Production Project 173
Christian Fayard

Granulation of Fertilizers by Compaction 183
Wolfgang Pietsch

Design Parameters for Bulk-Blending and Compaction/Granulation Plants 197
Daniel M. Alt

List of Delegates and Invited Speakers 206

Questions and Answers 212

Keynote Address
Uniqueness – The Key to Survival

The Story of the Oldest Continuous Fertilizer Producer in the World: Sociedad Quimica y Minera de Chile, S.A. (SQM)

Fernando Encinas, President, Chilean Nitrate Corporation – United States

Introduction

By the end of the 18th Century, the exploitation of sodium nitrate in Chile was beginning in the North of Chile. The product was mainly used for making gunpowder by mixing it with sulfur and charcoal.

When America was discovered and the Europeans began to conquer and dominate it, South American sodium nitrate was as valuable as gold. It was used to make blasting powder for work in the mines and gunpowder to protect the conquistadors.

The Indians from the Atacama Desert in Chile were the first to discover and use the fertilizing qualities of sodium nitrate. Undoubtedly, the new property of this noble product applied to a peaceful use in agriculture was the great "explosion" of sodium nitrate throughout the world. The following is an account of the development of this unique natural resource that is essential to agriculture and industry alike.

History of Sodium Nitrate

Discovery of Sodium Nitrate in Chile

The writer, Oscar Bermudes, tells us in his remarkable *History of Saltpeter*:

> On one occasion, two Indians were crossing the arid Pampa, and when night came they decided to halt and rest. The cold compelled them to make a fire, but to their surprise the weak bonfire began to grow and burn the land with an unexpected

crackling. The poor Indians were terrified and thought that a devilish spirit was afoot. They fled running until daybreak and went to the Camina Parish (Department of Tarapaca) and told the priest what they had seen. The priest also believed that some supernatural event had occurred and went to the place of the event. After blessing the place and saying several prayers, he returned to the parish with some samples of the earth where the Indians had seen the fire. After the analysis of the samples, he verified that it was a very rich ore with a high grade of potassium nitrate, which was at that time a powerful component used in the making of gunpowder. The priest left the rest of the samples in the yard of the parish. A short time afterwards he was very surprised to see that nearby plants had grown enormously. He made a test with vegetables and obtained the same wonderful result. The priest then recommended that church members use this fertilizer which he called the "Tonic for the Vegetable Kingdom."

The First Shipment to the Old World

On the 21st of July in 1830, the first ship loaded with Chilean sodium nitrate sailed for the Old World. The four-masted sailing vessel arrived at the Port of Liverpool in England after a long, hard journey. When the local authorities were informed about the load brought in the vessel, they would not allow it to dock, since sodium nitrate was considered a highly dangerous material. We can understand such a fear, since the product was thought to be synonymous with gunpowder at that time and place, suggesting explosion and death.

Mr. Aikam, the Port Authority, gave the order to cast the sodium nitrate overboard. Fortunately, he kept 10 bags and gave them to some farmers in Glasgow. We can, of course, imagine the results. The harvests where this "dangerous product" had been used tripled their usual output.

Geographic Setting

The Atacama Desert is the most arid area of the world. The saltpeter deposits are located between 19° and 26° south latitude and 69° and 71° west longitude, covering a total desert surface of 18 million ha. It is a landscape with singular characteristics and well-differentiated topographical zones.

History of Chilean Nitrate Use in the United States

The First Vessel

Only a few years after sodium nitrate production was begun in Chile, the first shipment of this material to the United States reached the Port of

Norfolk, Virginia, in the sailing ship "El Globo" in July 1831. It was a small parcel of 830 tonnes and was believed to have been used for explosives. Subsequent deliveries were slow and sporadic because the uses of Chilean nitrate had not yet been clearly established either in industry or in agriculture.

The Growing Demand for Sodium Nitrate

By 1869 Chile was producing 100,000 tonnes of nitrate to meet the rapidly increasing world demand. Some 8,000-10,000 tonnes of the material was used annually in North America.

Thereafter, the Chilean nitrate industry grew uninterruptedly for more than 30 years, culminating at the end of World War I with 3.3 million tonnes of nitrate being exported from Chile in 1918.

The significance of Chilean nitrate to U.S. agriculture and industry was at its greatest impact during the last quarter of the Nineteenth Century and the early part of the Twentieth Century. The United States was practically dependent on the Chilean nitrate imports for its nitrogen requirements. U.S. annual consumption of Chilean nitrate during that period was some 82,000 tonnes and represented almost 70% of total U.S. nitrogen usage. Chilean production statistics show worldwide (not only in the U.S. market) that 67.3% of total world nitrogen production between 1900 and 1905 came from Chilean nitrate. Chilean nitrate imports in the United States reached 1 million tonnes annually during World War I.

Synthetic Ammonia

In 1921, shortly after World War I, the commercial production of synthetic ammonia by the Haber-Bosch process began in the United States and Europe. This development was the beginning of a decrease in the relative significance of natural versus synthetic nitrogen, especially in the agricultural sector. Chilean nitrate imports into the United States during the 1920s no longer matched those of the war period. A new process for the production of nitrates was introduced. The Guggenheim process, which together with the subsequent solar evaporation process, facilitated a large-scale production system.

The United States Depression Effect

The depression period of the early 1930s left a deep impact on Chilean nitrate exports to the United States. The extent of the sudden, dramatic drop in U.S. imports can be best understood by realizing that only 50,000 tonnes was imported in 1932. (It is believed that only 120,000 tonnes of Chilean nitrate was consumed worldwide in 1932/33.) Synthetic sodium nitrate in the United States was consumed at an even lower rate in 1932 – only

20,000 tonnes. During the remainder of the 1930s, however, Chilean nitrate quickly recovered much of its earlier position as the following statistics indicate:

Period	Shipments to the United States (short tons)	Percent of World Sales
1933/34	398,354	35
1936/37	714,769	42
1939/40	720,709	36

Effects of World War II on Sodium Nitrate Production

The period of World War II was an extremely interesting one in the history of Chilean nitrate usage in the United States. In December 1940, the defense supplies corporation of the U.S. Government bought 300,000 short tons as a strategic emergency material reserve, and in September 1941 the Chilean nitrate industry gave a priority export rating to materials needed by the United States.

The importance attached to Chilean nitrate during this period was for the production of food for the Allied Powers. In January 1942, the Office of Production Management issued Order M-61 by which the Chilean Government took over the allocation of Chilean nitrate. For the remainder of the war, its allocation to fertilizer manufacturers and dealers was handled by the Chief of the Nitrogen Unit in the Chemical Branch of the Office of Production Management (later named the War Production Board) in consultation with the U.S. Department of Agriculture.

Allocations were made in accordance with government priorities. In the 1941/42 period, the United States imported 598,765 short tons and in the 1942/43 period, 1,031,578 short tons.

It is interesting to note that despite the military/agricultural importance of the nitrate, only two shipments, totaling some 12,000 short tons en route to the United States, were sunk as a result of enemy submarine action.

Returning to 1989, sales tonnages in North America no longer parallel the high levels of World War II because of several competitive synthetic products. Chilean nitrate products continue to be in demand for specific crops in the eastern, middle south, and western areas of the United States.

Sociedad Quimica y Minera de Chile, S.A. (SQM) – A New Beginning

Company Founded

The Chilean Nitrate Industry originated in the saltpeter Pampas with 140 mines working this natural resource. After various periods of success, the industry began to decline and was nearly abandoned after World War II. This decline proved to be the lengthiest period of all.

Twenty years ago, a new beginning was made by creating a new corporation – SQM – in 1968. This was done because of an agreement between the Chilean Government and the American Corporation, Anglo-Lautaro.

In 1971 the company was 100% state owned. This company did not have a positive performance, and up until 1980 was losing considerable amounts of money – close to U.S. $20 million annually.

Privatization of the company was started in 1983 by transferring shares to the private sector. In 1986 more than 51% was sold to private investors, and by 1988, 100% of the stock was privately owned.

SQM Facilities

There are mines with mineral reserves sufficient to maintain the current production for over 30 years. Two SQM plants produce the different nitrates: Maria Elena has a processing capacity of 18,000 tonnes of ore per day and Pedro de Valdivia 35,000 tpd.

The transportation system consists mainly of railways totaling 180 km between mines, plants, and SQM's port. The port is fully mechanized with a shiploading capacity of 1,200 tph.

The Basic Process

A very brief description of the process includes the following steps:

- Open pit mining
  - -Blasting, shovels, trucks, and railway
- Grinding
  - -From up to 1 m diameter to about 1 cm
- Leaching
  - -In vats with water
- Solar evaporation
- Crystallization
  - -By means of a cooling system

- Prilling
  - -Melting and grain forming by falling in a prill tower
- Iodine extraction

The Human Resources

SQM has a total of 5,024 employees. Their number by position follows: executives – 25, professionals – 458, and workers – 4,541.

Ownership

The transformation of the ownership structure afforded foreign investors the opportunity to invest in SQM.

United States investors and their Chilean affiliates now claim 20% of ownership in SQM. Employee ownership has risen steadily to 21%, and institutional investors account for 32% of shareholders. The remaining 27% is dispersed among 1,996 other investors.

SQM Organization

The SQM organization has changed dramatically in the last 8 years.

The reason for change is obvious and familiar to all of us – the need to adapt the corporation to the new challenges that the fertilizer producers have had to face worldwide. The changes were oriented to bringing new special products to the market and providing better services.

SQM is based in Chile with commercial subsidiaries in selected locations throughout the world. SQM markets directly in South America, Central America, the Caribbean, Africa, China, and other defined areas where subsidiaries do not market SQM products.

Subsidiary Organization – Each subsidiary has its own staff, which includes agronomists and sales and marketing personnel. The actual situation in each market is different as well as the scenarios. For example, sugarbeets in Holland and in Belgium in comparison with the flue-cured tobacco in North Carolina, U.S.A., require a different approach and knowledge. The agronomists and sales force must maintain the product's competitiveness within their own local situation.

Business Description

SQM is a chemical and mining industry exploiting and processing a unique mineral. SQM produces natural sodium nitrate, potassium nitrate, iodine, and sodium sulfate. Marketing and sales are conducted on a worldwide basis in both agricultural and industrial markets.

A Quick Look at the Figures

1988 Figures:

- 18.3 million tonnes of mineral was processed.
- 920,000 tonnes of final products.
- US $242 million sales.
- 80% of sales to export market in 67 countries.
- 53% of sales to industrial market.

Income Statement – 1988

	US $ (millions)	%
Sales	242	100
Operating costs	173	
Gross profit	69	29
Administrative and selling expenses	17	
Operating income	52	22
Other income (expenses)	1	
Taxes	5	
Net income	48	20

Sales

Sales have increased systematically in the last 5 years – from US $143 million in 1984 to US $242 million in 1988.

Profit and Earnings

The significant increase in profits confirms the constant trend maintained during the past 5 years. Consolidated net profits of SQM have gone from US $9.4 million in 1984 to US $48 million in 1988.

The same trend is observed in the earning per share and the valuation of the shares. The nominal profitability per share during 1988 was 54%. The value of the share had gone from US $0.10 in 1983 to US $1.70 in 1988. The shares are traded on the Santiago Stock Exchange.

The World Market – Agriculture Nitrate

World Nitrate Consumption (1988)

In our opinion, calcium nitrate is the major nitrate fertilizer used. Of course, this excludes ammonium nitrate.

The second major source of nitrate is potassium nitrate, followed by sodium nitrate and our 15-0-14 product. We estimate current world total consumption of nitrate nitrogen (N basis) in these forms to be 318,000 tonnes annually.

World Chloride-Free Potash Consumption

Potassium sulfate has about 75% of the nonchloride potash market, followed by sulfate of potash-magnesium, potassium nitrate, and 15-0-14. SQM's production of 15-0-14 amounts to 170,000 tonnes annually.

World Potassium Nitrate Production

The total world production of potassium nitrate is estimated to be 566,000 tonnes of product. Haifa (Israel) is the largest producer accounting for 44% of the total, followed by SQM which produces 30%. There is also some production in Spain, Mexico, and China. Kemira in Denmark produces a liquid fertilizer containing potassium nitrate, and we understand they are planning to produce some dry, granular potassium nitrate for the European market.

This year SQM will produce a total of 160,000 tonnes of potassium nitrate and in 1990 could increase the production to 250,000 tonnes, more or less reaching the production capacity of Haifa.

SQM Products

Agricultural and Industrial Products

SQM produces three basic agricultural products and four industrial products as follows.

Agricultural Products	Industrial Products
1. Nitrate of soda (16-0-0)	1. Iodine
2. Nitrate of soda potash (15-0-14)	2. Sodium sulfate
3. Potassium nitrate (13-0-44)	3. Sodium nitrate
	4. Refined sodium nitrate

Last year our company began to market potassium nitrate in the United States.

Chilean Nitrate Fertilizer Use by Crop and Geographical Area

Flue-cured tobacco, vegetables, and fruit trees such as apples, peaches, and citrus are the main markets from Florida to New York on the East Coast; in the Mississippi Delta, cotton; on the West Coast, vegetables and fruit trees.

Main Uses of Potassium Nitrate

The main use of potassium nitrate in Europe is on hydroponic crops, in the United States for bulk blends and compound fertilizers, and in Brazil and the rest of South America and Central America for bulk blending.

The direct application market is where the use of potassium nitrate will grow in some geographical areas of the United States, and in some worldwide niche markets for specific crops that are sensitive to chlorine.

Sales by Product

Of the 897,000 tonnes of products sold annually, agricultural sodium nitrate represents 350,000 tonnes or 39%.

This was followed by potassium nitrate with 312,000 tonnes annually; this includes the SQM 15-0-14 (nitrate of soda potash).

These are followed, in order, by our industrial-grade sodium nitrate, sodium sulfate, and iodine.

Income From Products

Among all of SQM's products, iodine is the single largest source of income, with an amount close to $80 million followed by the different nitrates (agricultural and industrial grades) and sodium sulfate. Iodine is a unique product and SQM is the world's largest producer.

Optimizing SQM's Products and Profitability

The outstanding expansion experienced by SQM during recent years, as well as the unique nature of its raw materials within the world context, has led it to establish special priorities in the fields of research and development.

The policy applied by SQM has consisted in allocating the resources to those projects that have the most profitable perspectives within the framework of the company's global activity.

The programs carried out during the past year and those foreseen for 1989 and beyond require the study of new technologies and processes, which will allow us to exploit the competitive advantage of having a natural source of nitrate.

This technological development has been strengthened through a recently subscribed agreement with Israel Chemical Limited, a firm which has ample experience in the fields of mining, chemistry, and fertilizers and which also has a high level of technology.

The purpose of this agreement is to research and analyze important investments destined for the production of potassium chloride, sodium sulfate, and potassium sulfate.

In the field of iodine, in order to obtain better use of its raw materials, the SQM Company has entered into a joint venture with firms for the purpose of exploiting the refined products which are not being treated at this time.

In this context, the Research & Development Center was created. This unit is oriented towards the implementation of technologies that have been adapted to the special properties of the raw materials that are exploited by SQM.

During 1988 it was possible to produce potassium nitrate under optimal conditions, meeting the requirements of the most demanding markets of the world.

Development of Chilean Nitrate Corporation (CNC)

From the worldwide aspect, we now move to the market for which the Chilean Nitrate Corporation is responsible.

Introduction to CNC

- CNC was incorporated in the State of New York in 1927.
- Headquarters in Norfolk, Virginia.
- Has permanent staff of 32 employees.
- Imports fertilizers in bulk to several port/warehouses in the United States and Canada.
- Markets SQM's products in North America.

- Markets fertilizers directly through manufacturers and dealers in the United States.
- Gives technical assistance to tobacco production to the SQM organization worldwide.

The Key to Survival

At the end of 1985 we asked ourselves several questions:

1. How can we find a way to change the negative trend in our fertilizer sales?
2. How can we avoid more reformulation?
3. How can we begin to gain market share and develop new markets?

The general agreement was that we needed to work on all fronts according to a very simple and basic marketing idea, which can be designated as the keys to survival. These keys are:

1. Research and extension.
2. Marketing.
3. Customer service.
4. Competitiveness.
5. Manufacturing techniques.
6. New products.

At the end of 1985 the following questions were raised at CNC:

1. How can we increase nitrate consumption?
2. How can we demonstrate that one expensive unit of nitrate will result in economic benefit?
3. How can we be competitive?
4. And last, where do we want to be in the next 5 years?

After digesting much information and analyzing the data from different viewpoints and scenarios, the following answers (more or less) were developed:

First Question: How can we increase the nitrate consumption?

Answer:
1. Determine on what crops nitrate can really make a difference.
2. Determine the "niche" markets.
3. Identify future trends and requirements for nitrates.

4. Make the product available to manufacturers and dealers.
5. Most importantly, give the sales staff the freedom to develop marketing ideas and support them with qualified agronomists.

Second Question: How can we demonstrate that the use of one unit of the more expensive nitrate will result in an economic benefit?

Answer:
1. Promote research and employ extension agents.
2. Give grants to several universities to study specific alternatives under various weather and soil conditions.
3. Work toward obtaining consistent results and make these results available to agronomists, farmers, and manufacturers.
4. Finally, create a customer-stimulated demand for the products.

Third Question: How can we be competitive with other sources of nitrate?

Answer:
1. Decrease cost of producing products (variable and fixed).
2. Improve warehouse service.
3. Establish more flexibility in our credit system.
4. Create a strong customer relation department.
5. Give real incentives to company personnel to produce concrete results.
6. Establish premiums for manufacturers and dealers who reach sales goals – that means our sales force must push demand.

Fourth Question: Where do we want to be in the next 5 years?

Answer:
1. Remain in the nitrate business.
2. Stay in the specialty market.
3. Maintain and increase our market share in tobacco, vegetables, cotton, and other geographical markets.
4. Produce alternative nitrate fertilizers.
5. Enter new geographical areas where logistics permit and where the soil and crops require nitrate-type fertilizers.

Results:
1. We began marketing our refined industrial sodium nitrate in 1987.
2. We introduced potassium nitrate (KNO_3) into the market in January of 1988.
3. We initiated new research programs in different geographical regions, for example:
   a. United States – Northwest, middle south, and northeast areas of the United States. Crops in the targeted market were

predetermined and included fruits, vegetables, and sugarbeets in Michigan.

b. Central America and Mexico – Flue-cured tobacco in Guatemala, Dominican Republic, and Mexico. Melons in the Dominican Republic.

4. We increased sales from US $31 million in 1986 to above US $65 million this year.
5. Tonnage increased from 132,914 tonnes in 1986 to over 200,000 tonnes this year.

Conclusion:

The following are the primary factors that gave new blood to CNC and helped us find new avenues for marketing our nitrate products.

1. Creativity within the organization.
2. Recognition for good ideas.
3. Improved quality of products.
4. Engagement in research and extension work.
5. Control of overhead costs.
6. Maintenance of low production costs.
7. Strengthen the push/pull demand.

It is believed that the Central American, Caribbean, and Latin American companies should strive to maintain their individual character according to the actual situation within their market. This will give them advantages over the European and North American fertilizer manufacturers.

The unique nature of some local fertilizer products in the region, both old and new, is and will continue to be "The Key to Survival."

Latin American Fertilizer Perspective, 1960-95

Balu L. Bumb, Economist, International Fertilizer Development Center (IFDC) – United States[1]

Introduction

The fertilizer production and use data described in this paper specific to the Latin American region were abstracted from IFDC Publication T-34 entitled *Global Fertilizer Perspective, 1960-95: The Dynamics of Growth and Structural Change.*

These data are intended to provide perspective to the fertilizer production and use patterns that occurred in Latin America, compared with global patterns, during the past three decades. Projected trends into the mid-1990s are also indicated.[2]

Trends in Fertilizer Use

Table 1 provides data on N, P_2O_5, K_2O, and total nutrient consumption in Latin America during the 1960-88 period.

In 1988 Latin America used 9.2 million tonnes of nutrients: 4.0 tonnes of N, 2.8 million tonnes of P_2O_5, and 2.4 million tonnes of K_2O.[3]

Between 1980 and 1987, total nutrient use increased from 6.6 million tonnes in 1980 to 8.6 million tonnes in 1987. This growth of 2.0 million tonnes during the 1980s was small compared with 3.1 million tonnes during the 1970s.

In terms of annual growth, the growth in fertilizer use slowed down considerably during the 1980s compared with that in the 1970s and the 1960s (Table 2). During the 1980-87 period, total fertilizer use grew at 2.7% per annum, as against 9.8% per annum in the 1970s and 11.9% in the 1960s.

1. Presented by James J. Schultz, Fertilizer Production Specialist, International Fertilizer Development Center (IFDC).
2. A more complete portrayal of these data together with an analysis of the dynamics of growth and structural change in the fertilizer sector can be found in the previously mentioned IFDC Publication T-34. Copies of this publication are available for US $100. An executive summary is available for US $10 from the International Fertilizer Development Center, P.O. Box 2040, Muscle Shoals, Alabama 35662, U.S.A. The Spanish and French translations of the Executive Summary will also be available shortly.
3. All fertilizer quantities are in nutrient metric tons unless indicated otherwise.

Table 1. Fertilizer Use in Latin America, 1960-88

Year	N	P_2O_5	K_2O	Total
	(thousand nutrient tonnes)			
1960	292	299	135	726
1970	1,187	795	559	2,540
1980	2,658	2,346	1,598	6,602
1987	3,831	2,796	2,007	8,634
1988	3,997	2,867	2,378	9,242

Table 2. Latin America: Annual Growth in Fertilizer Use, 1960-88

Year	N	P_2O_5	K_2O	Total
	(%)			
1960-70	13.1	9.7	13.1	11.9
1970-80	8.3	11.1	10.7	9.8
1980-87	4.5	1.0	2.1	2.7
1987-88	2.6	2.1	16.6	7.0

This slowdown in growth in fertilizer use was caused by several factors like debt crisis, foreign exchange shortages, policy instability (removal of fertilizer subsidies in Venezuela and subsidized credit programs in Brazil), and low prices for export crops. Overall, slowdown in economic growth during the early 1980s also affected growth in fertilizer use.

Among different nutrients, phosphate and potash use was affected more adversely than nitrogen use because of macroeconomic difficulties.

The macroeconomic recovery and agricultural growth of the late 1980s are expected to restore growth in fertilizer use in the 1990s. The signs of that

recovery are already evident. For example, in 1987/88, total fertilizer use increased by 7% and potash use by about 17% (Table 2).

Because of slow growth in fertilizer use during the 1980s, per capita fertilizer use also grew modestly; it increased from 18.5 kg in 1980 to 21.5 kg in 1988 (Table 3). Per hectare fertilizer use increased from 38.6 kg in 1980 to 51.6 kg in 1988. During the 1970s, both per capita and per hectare fertilizer use doubled.

Table 3. Per Capita and Per Hectare Fertilizer Use in Latin America, 1961-88

Year	Per Capita	Per Hectare
	(kg of nutrients)	
1961	4.4	7.4
1970	9.1	17.5
1980	18.5	38.6
1987	20.6	48.1
1988	21.5	51.6

Share in Global Fertilizer Use

In 1988 Latin America accounted for less than 7% of total global fertilizer use. In 1980 and 1970, its share in global fertilizer use was about 6% and 4%, respectively (Table 4). A rather modest increase in its global share during the 1980s is a result of two factors, namely, slow growth in fertilizer use in Latin America and rapid growth in fertilizer use in other regions like South and East Asia, North Africa, and the U.S.S.R.[4]

Trends in Fertilizer Production

Table 5 provides data on fertilizer production in Latin America during the 1960-88 period.

4. See *Global Fertilizer Perspective, 1960-95: The Dynamics of Growth and Structural Change*, Chapter 2 for details.

Table 4. Latin America: Share in Global Fertilizer Use, 1960-88

Year	N	P_2O_5	K_2O	Total
	(%)			
1960	3.1	3.1	1.7	2.6
1970	4.2	4.2	3.7	4.1
1980	4.6	7.8	6.7	5.9
1987	5.3	8.3	7.7	6.5
1988	5.2	7.8	8.5	6.6

Table 5. Latin America: Fertilizer Production, 1960-88

Year	N	P_2O_5	K_2O	Total
	(thousand nutrient tonnes)			
1960	283	91	16	390
1970	732	328	15	1,075
1980	1,503	1,510	11	3,024
1987	3,046	1,920	11	4,977
1988	3,231	2,030	37	5,298

In 1988 Latin America produced about 5.3 million tonnes of nutrients: 3.2 million tonnes of N and 2.0 million tonnes of P_2O_5. Very little potash was produced. Currently, a potash mine is being developed in Brazil. When fully developed, the mine will have an annual capacity of 200,000 tonnes of K_2O. In 1960 Latin America produced small quantities of fertilizers. During the late 1960s and the 1970s, fertilizer production grew rapidly and reached 3.0 million tonnes of nutrients in 1980. Another 2.0 million tonnes of nutrients was added during the 1980-87 period.

Although there was a slow down in fertilizer use growth, fertilizer production grew at 6.4% per annum during the 1980s (Table 6). A considerable portion of this growth was geared for exports and was

Table 6. Latin America: Annual Growth in Fertilizer Production, 1960-88

Year	N	P_2O_5	K_2O	Total
	(%)			
1960-70	9.9	11.1	(-) 2.6	9.8
1970-80	7.0	15.7	(-) 4.9	10.5
1980-87	10.0	2.3	-	6.5
1987-88	6.1	5.7	236.4	6.4

concentrated in Central America. Most of this growth occurred in N production.

Share in Global Fertilizer Production

It is clear from Table 7 that Latin America's share in global fertilizer production has been increasing over time–from 1.6% in 1970 to 3.5% in 1988. Nevertheless, compared with other regions like North America, Western Europe, and Asia, it is still very small. Because of this small production base, Latin America, especially South America, is still dependent on fertilizer imports to meet its domestic fertilizer requirements.

Table 7. Latin America: Share in Global Fertilizer Production, 1960-88

Year	N	P_2O_5	K_2O	Total
	(%)			
1960	2.9	0.9	0.2	1.4
1970	2.4	1.7	0.1	1.6
1980	2.5	4.7	0.1	2.6
1987	3.9	5.4	0.1	3.5
1988	3.9	5.1	0.1	3.5

Future Outlook

The projected fertilizer demand and production potential in 1995 are presented in Table 8.

Table 8. Latin America: Fertilizer Outlook, 1995

	Projected Demand (1)	Projected Production Potential (2)	Gap Between Projected Production Potential and Demand (3) = (2) - (1)
	(thousand tonnes)		
N	5,043	5,694	651
P_2O_5	3,467	2,085	(-)1,382
K_2O	2,837	154	(-)2,683

Source: IFDC. 1989. *Global Fertilizer Perspective, 1960-95.*

In 1995 nitrogen demand is projected to be about 5.0 million tonnes, and phosphate and potash demand is projected to be 3.5 and 2.8 million tonnes of nutrients, respectively.

These projections imply a relatively higher growth in fertilizer use during the 1987-95 period because of improved micro and macroeconomic prospects for Latin American countries.

Nitrogen production is estimated to be about 5.7 million tonnes in 1995. Thus, Latin America would be in a position to export nitrogen products. However, in the field of phosphate and potash, it would be a net importer. It would need about 1.4 million tonnes of P_2O_5 and 2.7 million tonnes of K_2O to meet its fertilizer requirements.

NPKs in Perspective – Relating Fertilizer Products to Farmer Needs in Latin America

L. A. León, Soil Scientist, International Fertilizer Development Center (IFDC) – United States[1]

Introduction

During the past decade the population of Latin America has been increasing at an average rate of 2.3% per year (IDB, 1988). An added pressure is placed on available resources, such as cropland, as population increases and countries strive to feed their populations. To meet the increasing need for food, there are two main options: to expand croplands where available or to increase productivity. In the case of Latin America, expansion of croplands with agricultural potential implies the use of large areas of marginally low fertility lands. Soils of such areas – 822 million ha classified as Oxisols and Ultisols – are characterized by high acidity and low fertility, especially in nutrients such as phosphorus, nitrogen, potassium, calcium, magnesium, zinc, and boron. On the other hand, increases in productivity can be achieved through the use of agrochemicals and improved seeds and the adoption of improved cultural practices. In order to meet the ever-increasing demand for food in Latin America, it is necessary to increase productivity along with a systematic incorporation of new or marginal lands. In both cases, the rational use of amendments and fertilizers is of paramount importance to achieve this goal.

The Development of the Demand for Fertilizers in Latin America

Some countries in Latin America have a long history of fertilizer use. For instance in Peru, the Incas reportedly used guano as a fertilizer long before the arrival of the Spaniards. The use of guano has continued over the years and until recently the chemical fertilizer industry in Peru was designed primarily to supplement guano supplies. As a result, fertilizer plants are small and inefficient, and production costs are extremely high (Diamond et al., 1968).

1. Dr. León is stationed at Centro Internacional de Agricultura Tropical (CIAT), Cali, Colombia.

Quite different is the history in other Latin countries like Colombia where the use of fertilizers on farms did not really start until 1948 when imported products (NPKs) were used on potatoes and cereal crops in the Andes highlands. During the 1948-62 period, all fertilizers used in the country were imported. Domestic production started in 1963 with the opening of two plants which produced urea (105,000 tpy), NPKs (120,000 tpy), and ammonium nitrate (37,000 tpy of a 26% N product). Until 1962 most fertilizers in the country were used on potatoes and cereal crops in the high altitude areas (more than 2,000 m above sea level). After the two fertilizer plants started production and marketing of fertilizer, the use of fertilizer extended to other regions and crops in the country, especially coffee, rice, cotton, bananas, sugarcane, and tobacco. During the late 1960s and afterwards, the use of fertilizers was common in all agricultural regions and crops in the country. Actually N accounted for about 50% of the total nutrients used. Traditionally P_2O_5 has been the second most used nutrient, while K_2O has been in third place. However, during recent years, the use of K_2O and P_2O_5 has been approximately in the same amounts (Martínez, 1988).

In the Andean countries before the advent of high-yielding varieties and hybrids, the major sources of plant nutrients were farm and domestic manures, and these sources still are common among small farmers. Two examples are presented in Tables 1, 2, and 3, taken from unpublished research data (Guggenhein). In Imbabura, Ecuador (Table 1), for instance, 65.8% of the farmers use organic fertilizers and only 10.5% use chemical fertilizers for maize. For potato and beans, more than 43% use farm manures. In Boyacá, Colombia, a high percentage of small farmers use farm manure

Table 1. Farmers' Fertilizer Use Practices, Imbabura, Ecuador

Crop	Apply Chemical Fertilizer (%)	Apply Organic Fertilizer (%)
Potato	11.5	47.4
Maize	10.5	65.8
Beans	7.9	43.4
Bush beans	1.3	19.7

Source: Guggenhein, unpublished.

Table 2. Farmers' Use of Organic Fertilizers, Boyacá, Colombia

Type	Percent of Farmers Who Used
Farmyard manure	70.7
Compost	24.4
Chicken manure	17.1
Mixtures with chemical fertilizers	51.2

Source: Guggenhein, unpublished.

Table 3. Farmers' Fertilizer Use Practices, Boyacá, Colombia

Crop	Apply Chemical Fertilizer (%)	Apply Organic Fertilizer (%)
Potatoes	92.7	51.2
Maize	31.7	56.1
Beans	2.4	4.9

Source: Guggenhein, unpublished.

(70.7%, Table 2), but more than 50% use a mixture of organic and chemical fertilizers, especially farm manure mixed with 10-30-10 or 13-26-6. In this region, 51.2% of the potato growers apply organic fertilizer but 92.7% also apply chemical fertilizer (Table 3) using high P formulas because the major constraint on potato and cereal production is the low levels of soil phosphate.

A completely different case is that of Brazil. Brazilian agriculture production has experienced a surprising increase during the last two decades. This increase has been due to increases in grain yields resulting from the utilization of new technology, more and better inputs, especially chemical fertilizers, and mainly an advance of the agricultural frontier by the use of new lands in the Central, West, North, and Northeast regions of Brazil. The

old traditional agricultural regions generally had fertile soils in which the original nutrients were readily available, but most of the time these lands were poorly preserved. These soils were carelessly used for a long time and became poor. Now the farmers are trying to get high yields by adding limestone to correct acidity along with the use of high-grade fertilizers. Because of the high nutrient uptake of the new varieties and hybrids, in some regions plants are showing symptoms of sulfur and micronutrient deficiencies (ANDA, 1987).

In Brazil, until the decade of the 1960s, the national fertilizer production was very low. In 1950 only 700 tonnes of N and 6,000 tonnes of soluble P were produced. In 1987/88 the Brazilian industry produced 746,100 tonnes of N and 1,465,300 tonnes of P_2O_5. These data indicate a significant increase in the internal demand for fertilizers especially during the decade of the 1970s. During the 1950s the national consumption of N fertilizers was less than 10% of the total fertilizer consumption. In 1986 this figure increased to 85%. In 1981 production of phosphate fertilizers reached levels of 90% self-sufficiency (ANDA, 1987).

Currently, Latin American countries consume much more N than they produce. In the 1970s more than a 150% increase in N production was projected for Latin America and this increase took place mainly in Mexico, Brazil, Trinidad, and Venezuela. The additional capacity in Brazil was used to reduce its reliance on imports, whereas the additional capacities in Mexico, Trinidad, and Venezuela were used for export (Harris and Harre, 1979). Production and consumption will become much more balanced in the future if the increased nitrogen capacity is used to produce fertilizers for local consumption rather than for export. Mexico and Brazil are by far the major N-consuming countries in Latin America.

Latin American countries also produce less phosphate fertilizers than they consume. This deficit has been running at about 800,000 mt in recent years (1987/88). During the decade of the 1970s phosphate fertilizer production increased more than 100% (Harris and Harre, 1979). Although a substantial increase in phosphoric acid capacity was recently observed in Mexico and Brazil, the region's phosphate fertilizer deficit will become greater over time. Much of this deficit will be made up by imports of phosphoric acid. Brazil is one of the major phosphate-consuming countries in the region.

There is almost no K_2O produced in Latin America, although 1.7 million mt was consumed in 1984/85. Consumption reached 2.4 million mt by 1987/88; with the exception of a small amount of potassium nitrate produced in Chile and about 37,000 mt K_2O produced in Brazil, all of this

will be imported. Brazil is the major K_2O-consuming country and is currently devising plans to develop its potash reserves.

Table 4 shows the consumption of fertilizer per hectare of agricultural area, arable land and permanent crops, and per capita from 1971 to 1986. If one compares world consumption with that of South America, these data show that in South America the highest consumption per hectare is for phosphate followed by N and K_2O, contrary to the world total consumption that is in the order of N followed by P_2O_5 and K_2O.

Table 4. Consumption of Fertilizer Per Hectare of Agricultural Area (A), Arable Land and Permanent Crops (B), and Per Capita (C)

	A				B				C			
	1971	1976	1981	1986	1971	1976	1981	1986	1971	1976	1981	1986
	(kg/ha)				(kg/ha)				(kg/capita)			
World												
Nitrogen	7.2	9.7	12.9	15.4	23.7	31.5	41.3	49.1	8.9	10.9	13.3	14.7
Phosphate	4.8	5.9	6.6	7.4	15.9	19.1	21.1	23.6	5.9	6.6	6.8	7.1
Potash	3.7	4.9	5.1	5.6	12.3	16.0	16.3	17.1	5.6	5.5	5.2	5.3
TOTAL	15.8	20.5	24.5	28.4	51.9	66.6	78.7	90.4	19.4	23.0	25.3	27.1
South America												
Nitrogen	1.1	1.7	1.9	3.0	5.3	7.9	8.5	13.0	3.1	4.5	4.7	6.7
Phosphate	1.4	2.8	2.7	3.6	6.9	13.0	11.8	15.6	4.0	7.3	6.6	8.0
Potash	0.8	1.5	1.5	2.6	4.0	6.9	6.7	11.1	2.3	3.9	3.8	5.8
TOTAL	3.3	5.9	6.2	9.2	16.1	27.7	27.1	39.7	9.4	15.7	15.0	20.5

Source: FAO, 1987.

Information obtained for 1987/88 indicates that for Latin America the $N:P_2O_5:K_2O$ consumption ratio was 1:0.72:0.59, while for the world total it was 1:0.48:0.36. This confirms the relatively high per hectare consumption of P_2O_5 and K_2O in Latin America in relation to N consumption. The introduction of new, infertile lands in Brazilian and Colombian agriculture is probably responsible in part for this rapid increase in phosphate and potash fertilizer use.

Fertilizer Products Used in Latin America

Five countries in Latin America consume 85% of the fertilizers used (1984/85): Brazil, Colombia, Cuba, Mexico, and Venezuela. Brazil and Mexico consume 68%. Thirty-five countries consume the remaining 15% of the fertilizers used. Fertilizers are used in high rates (>100 kg/ha) in small Central American and Caribbean countries like Costa Rica, El Salvador, Cuba, and Puerto Rico. Colombia, Panama, Guatemala, Belize, Haiti, Santo Domingo, some Caribbean Islands, and Mexico use from 50 to 100 kg/ha of nutrients. The rest of the Latin American countries use less than 50 kg/ha of nutrients (FAO, 1988).

In Central America most of the countries use NPKs to supply P_2O_5 and K_2O and sometimes N to their crops. The most used N sources are urea, ammonium sulfate (AS), and ammonium nitrate (AN). They use triple superphosphate (TSP) and diammonium phosphate (DAP) as P_2O_5 sources, and potassium chloride (MOP) as a K_2O source. Mexico and Nicaragua do not use many NPKs as N and P_2O_5 sources (FAO, 1988).

In South America, Bolivia, Colombia, Ecuador, and Venezuela use NPKs as sources for the three primary nutrients. Countries like Argentina, Chile, and Peru generally use straight fertilizers such as urea, AS, sodium nitrate (SN), TSP, DAP, MOP, and potassium sulfate (SOP). In Brazil they use NPKs as N and K sources, but urea and MOP are the main sources used to supply these two nutrients. As P sources, Brazilian farmers use mainly TSP and SSP. Paraguay, Uruguay, Peru, and Venezuela use DAP and TSP. Uruguay also uses imported phosphate rock (PR) (FAO, 1988).

There is a great diversity of NPKs used in Latin America according to crops and soil properties. Generally, small farmers use formulas high in P_2O_5 for crops like potatoes, maize, and sugarcane for "panela" production. The most common $N:P_2O_5:K_2O$ ratios used in Colombia are 1:3:1, 1:2:1, 1:2:0.5, 1:4:1, and 1:2:2 (Martínez, 1988). Sometimes farmers use 1:1:1 formulas, especially for second applications or in mixtures with organic fertilizers. In some countries where potassium apparently is not a limiting element, for example, Guatemala, they use 1:1:0 or 1:1.25:0 formulas. In the case of coffee growers, they use 1:1:1 and 1:0.4:1:0.1 Mg which is relatively low in P_2O_5. Only a small portion of the medium-to-large farms which grow rice, sugarcane, cotton, tobacco, bananas, maize, sorghum, oil palm, and pastures use NPKs, mainly 1:1:1 type of formulas. They prefer to apply single fertilizers like urea, AN, AS, DAP, TSP, MOP, and PR.

With the introduction of new varieties of rice, wheat, beans and soybeans and hybrids of maize and sorghum, fertilizer consumption has increased in most countries of Latin America (Table 5), especially in

Table 5. Total Fertilizer Production, Imports, Exports, and Consumption in Latin America

	Production		Imports		Exports		Consumption	
	1975/76	1986/87	1975/76	1986/87	1975/76	1986/87	1975/76	1986/87
	(thousand tonnes)[a]							
World	94,197	140,778	24,282	41,627	22,834	44,313	90,423	133,176
Costa Rica	30	32	53	67	13	5	66	85
Cuba	91	180	352	522	-	-	331	663
Guatemala	5	20	52	122	-	20	55	115
Mexico	864	1,490	210	298	1	48	1,073	1,826
Trinidad Tobago	44	226	3	3	34	217	7	5
South America	**1,181**	**2,945**	**1,605**	**2,965**	**92**	**211**	**2,697**	**5,608**
Argentina	26	32	36	123	-	1	60	155
Brazil	755	2,248	1,223	1,712	-	10	1,978	3,946
Chile	146	112	86	227	66	75	99	222
Colombia	101	106	31	312	23	-	215	408
Ecuador	7	-	26	106	-	-	33	106
Peru	37	35	84	109	-	-	104	116
Uruguay	35	29	37	46	-	-	47	66
Venezuela	75	384	63	276	3	124	140	535

a. Total nutrients ($N + P_2O_5 + K_2O$).

Source: FAO, 1988.

Cuba, Guatemala, Mexico, Argentina, Brazil, Chile, Colombia, Ecuador, and Venezuela. In many areas, especially where medium-to-large farms are located, the planting of legumes as a source of N has been abandoned as well as the use of animal and domestic manures. Small farmers who generally continue their old practices of allowing the land to lay fallow for long periods, continue to use organic fertilizers. However, socioeconomic pressures are forcing them slowly to change to the use of chemical NPK fertilizers.

Because of the high cost of transportation in most Latin American countries, high-analysis fertilizers are increasingly competitive at the farm level. Some NPs and NPKs are relatively high-analysis materials, but their main advantages are their high uniformity, low hygroscopicity, and good physical quality. These properties make them more suitable than the

hygroscopic urea-based NPKs or bulk blends considering the generally inappropriate management and storage conditions found in the developing countries.

The use of new varieties and hybrids on soils of relatively low fertility treated with high-analysis NPK fertilizers or with straight N, P_2O_5, or K_2O products has lead to marked deficiencies of secondary nutrients such as Mg and S and micronutrients like B, Zn, and Cu. This situation will probably lead to an increase in the demand for homogeneous NPKs which may contain some secondary nutrients and/or micronutrients. Such complex nutrient needs mean that conventional granular or compacted NPKs that incorporate these supplementary elements should be able to compete with bulk-blended products which attempt to supply such nutrients.

The Agronomics of Fertilizer Use in Soils of Latin America

Major agricultural soils in the countries of Latin America have adequate supplies of most of the 13 essential nutrients, the exceptions being N, P, and sometimes K, which are the principal mineral constituents of the plant and the basic nutrients of fertilizers generally found in the market.

The nutrient uptake of cereals like rice can be affected by the climate, the cultivars, and the crop management. Curves of nutrient absorption of a rice cultivar IAC-164 from Brazil are presented in Figure 1. At the beginning of the growth period, rice requires mainly N and K and Fe in the case of micronutrients. Later on at panicle initiation there is an increased demand for other nutrients and these are absorbed until panicle emission. P and Zn, however, continue to be absorbed until the ripening stage.

In general, nutrients are absorbed during the entire plant cycle. The difference is in the velocity of absorption and translocation from the leaves and stems to the grain. For example, at the panicle initiation stage the plant will absorb nearly 75% of the K required, and during the grain formation stage it will absorb nearly 75% of the P required. If a soil has a low nutrient supply, its effect on the crop is shown at first by only marginal decreases in growth. However, during those periods when the supply of nutrients to the plant is critical, a shortage of nutrients can severely affect grain yield.

As shown earlier in the case of modern varieties of grains like rice, there are critical periods when N supplies must be at a high level. This has led to the well-known splitting of applications of N fertilizers on the semi-dwarf rice and wheat varieties. In the case of maize, also, sidedressing 45 days after planting is a common practice among Latin American farmers.

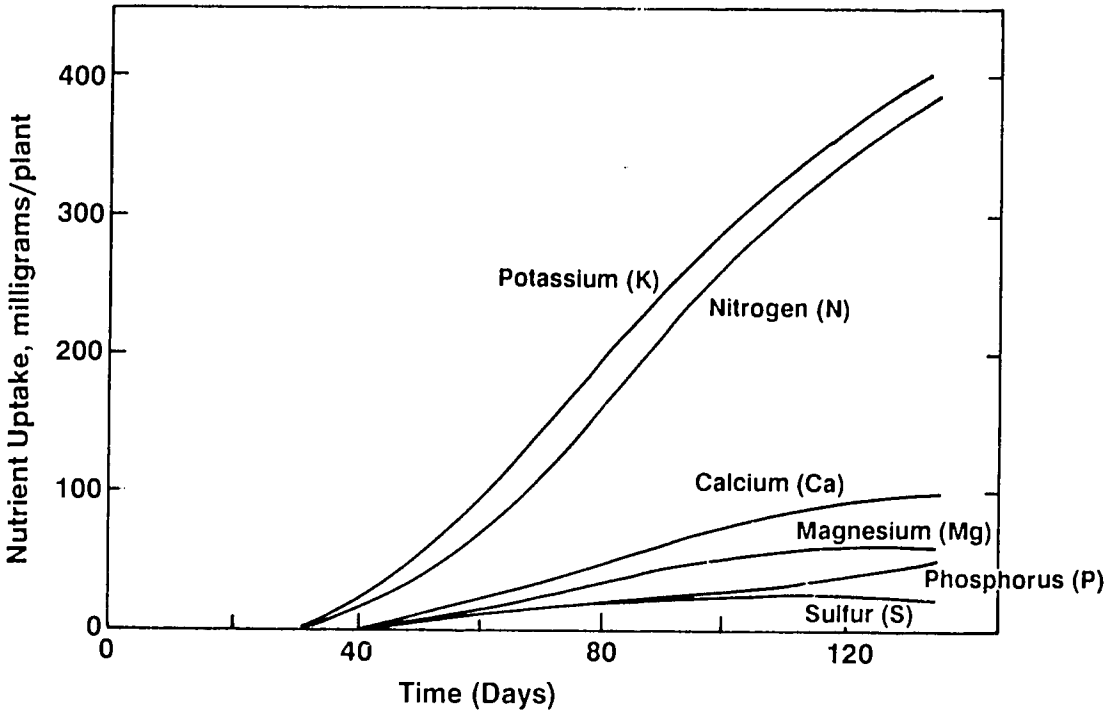

Source: Malavolta and Filho, 1983.

Figure 1. Macronutrient Absorption, IAC-164 Rice Cultivar.

Homogeneous Multinutrient Fertilizer Production

Total nutrient production in the world continues to show adequate growth. About 140 million tonnes of nutrients was produced in 1984/85 compared with about 150 million tonnes during 1987/88. On the other hand, the increase in production of homogeneous multinutrient (NPK) fertilizers is showing only a moderate growth. The production of homogeneous NPKs amounts to about 15% of the world's total product tonnage. If one includes the binary products (NP), single-nutrient materials which are blended prior to application, and fluid fertilizers, then of the 150 million tonnes of nutrients an estimated 20% (about 30 million tonnes) is actually applied in the form of multinutrient (NPK) products.

Latin America is actually producing only 3.5% of the total world fertilizer production. During 1987/88 Latin America produced only 5.3 million

tonnes of nutrients, which includes 3.2 million tonnes of N and 2.0 million tonnes of P_2O_5.

Soil Fertility and Plant Nutrition Problems in Latin America

In most Latin American countries the diversity of climates and topography zone permits the cultivation of tropical, subtropical, and temperate climate crops, but in general, with the exception of some crops in Argentina, Chile, and Uruguay, yields are very low. Responsibility for these low yields is attributed in part to the lack of good fertilization programs and a failure to understand and interpret basic principles of plant nutrition. In most of the countries the use of soil analysis by farmers is quite limited and recommendations are based on only a few soil parameters like pH, organic matter, P, and K. In many cases, nutrient recommendations are based on crop requirements and nutrient levels taken from temperate climate countries or based on very meager agronomic field research. Extrapolation of results of nutrient levels from one soil or crop to another is very common and foliar analysis is used in only a limited way.

Modern soil and plant analysis laboratories are being set up in most countries in Latin America and other elements besides N, P, and K can be analyzed. If fertilizer recommendations are based on sound field agronomic research and the critical levels of nutrients are well established, farmers will be able to benefit in terms of higher yields. Under these circumstances, on the basis of their soil and tissue analyses, laboratories can recommend to farmers fertilizer formulas especially designed for their soils and the crops they are growing. Instead of using only the NPKs traditionally found in the market, flexible formulations can be prepared. Then, new, relatively small fertilizer plants that produce bulk blends and compacted fertilizers can play a very important role in increasing land productivity and developing successful agriculture practices on the small-to-medium size farms.

References

ANDA. 1987. "Plano Nacional de Fertilizantes," Associacao Nacional para Difusao de Adubos E. Corretivos Agricolas. Impressao-Editora Grafica Ltda. Rua Serra de Jaire No. 889, Agua Rasa CEP03175, Sao Paulo, SP, Brazil.

Diamond, P. B., J. E. Culp, J. L. Nevins, and C. H. Davis. 1968. "Peru's Fertilizer Distribution and Marketing System," Analysis and Recommendations, TVA National Fertilizer Development Center, Muscle Shoals, Alabama, U.S.A.

FAO. 1987. *FAO Fertilizer Yearbook*, Vol. 36, 1986 FAO Statistics Series No. 77, Rome, Italy.

FAO. 1988. *FAO Fertilizer Yearbook*, Vol. 37, 1987 FAO Statistics Series No. 83, Rome, Italy.

Harris, G. T., and E. A. Harre. 1979. "World Fertilizer Situation and Outlook-1978-85," International Fertilizer Development Center (IFDC) and National Fertilizer Development Center (TVA), Muscle Shoals, Alabama 35662, U.S.A.

Interamerican Development Bank (IDB). 1988. Economic and Social Progress in Latin America, Washington, D.C.

Malavolta, E., and D. Fornasieri Filho. 1983. "Nutricao Mineral de Cultura do Arroz," IN M. E. Ferreira, T. Yamada, and E. Malavolta (Eds.), p. 95-140, Cultura do Arroz de Sequeiro Factores Afetando a Productividade, Pricacicaba, Instituto da Potasa & Fosfato, Instituto Internacional da Potasa.

Martínez, A. 1988. "The Phosphate Fertilizer Sector in Colombia. Supply Alternatives and Policy Options," IFDC/CIAT Phosphorus Project Report, International Fertilizer Development Center, P.O. Box 2040, Muscle Shoals, Alabama 35662, U.S.A.

Agronomic and Economic Evaluation of Phosphorus Sources

L. A. León, Soil Scientist, and A. Martínez, Agricultural Economist, International Fertilizer Development Center (IFDC) – United States

Foreword

During this workshop interest was expressed by many participants on the use of Latin American phosphate rocks for agricultural production. A request was made to Dr. Luis A. León, who has been in charge of the "IFDC/CIAT Phosphorus Project," to prepare a summary depicting some of the research findings of this project. This paper presents some of the results obtained using Colombian phosphate rocks in agricultural production.

Introduction

This paper presents in a summarized form research results obtained by one of the activities of the IFDC/CIAT Phosphorus Project related to the agronomic and economic evaluation of phosphorus (P) sources with different degrees of solubility on different crops in several agroclimatic regions of Colombia. The P sources included in the evaluation presented here are: ground phosphate rock (GPR) for direct application, sulfuric acid-based partially acidulated phosphate rock (PAPR), and triple superphosphate (TSP).

Ground phosphate rock, the least-soluble P source tested, is the easiest fertilizer product to manufacture from phosphate rock; it consists simply in the fine grinding of the rock. PAPR is a phosphate rock treated with only a fraction of the acid (usually 30%-50%) required to completely convert the insoluble phosphate to water-soluble monocalcium phosphate or to make SSP or TSP. Acidulation of the phosphate rock can be done with sulfuric, hydrochloric, phosphoric, or nitric acid. In this report, however, acidulation refers only to the use of sulfuric acid.

This paper presents research results to help identify areas and crop fertilizer management practices where different P sources can be used effectively. Research results presented refer to:

1. The agronomic evaluation of phosphate rock.
2. The agronomic evaluation of PAPR.
3. The economic evaluation of the different P sources.

Research results presented were obtained from annual reports and technical publications that have been prepared as part of the project activities. For simplicity and in view of the massive amount of data and research results available, it was decided to select representative individual experiments and experiments pooled together to help illustrate concepts being discussed and research findings obtained.

There are several phosphate rock deposits in Colombia with potential agricultural uses (1). Research conducted by the project has indicated that several crops in Colombia respond similarly to phosphate rocks from the Huila and Pesca deposits. Phosphate rocks from the Iza and Media Luna deposits, which have similar chemical composition to the Pesca and Huila rocks but have not been field tested due to their unavailability, are estimated to be agronomically equivalent. The phosphate rock from Sardinata, which has a higher P_2O_5 content, but less carbonates replacing phosphates in the apatite crystal structure, is less reactive; therefore, as has been demonstrated by field trials, its agronomic efficiency is inferior to the other rocks. Therefore, recommendations made for the use of phosphate rocks for direct application refer to ground rock from Huila and Pesca, and possibly can be extrapolated to rock from Iza and Media Luna.

With respect to PAPR from different sources, results presented include the field testing of products manufactured with the Huila and Pesca rock, which have some similar properties. It is expected that the Iza and Sardinata phosphate rocks acidulated to obtain the same amount of soluble P should possess similar agronomic properties. Also included in this paper are results of mixtures of GPR with DAP and TSP, which simulate PAPR products. These mixtures were prepared to have the same amount of P in soluble form as a PAPR product.

Agronomic Evaluation of Ground Phosphate Rock

One of the main overall objectives of the IFDC/CIAT Phosphorus Project has been the identification of soil, crops, agroclimatic conditions, and fertilizer management practices under which indigenous phosphate rocks can be used effectively as fertilizers. Research conducted by the project indicates that the use of GPR for direct application is advisable only with some phosphate rocks and under specific conditions. It has been found that the following factors play an important role in determining the agronomic and economic effectiveness of phosphate rocks (2,3):

1. The chemical reactivity of the rock.
2. The particle size of the rock.
3. The soil properties and climate of the region.
4. The timing and method of application.
5. The crop and the farming system used.
6. The residual effect of the rock.
7. The use of the rock as a soil amendment.

The following paragraphs summarize research results obtained related to each one of the above-mentioned factors.

Chemical Reactivity of the Rock

The reactivity of phosphate rocks can be evaluated by the amount of the total P they have soluble in neutral ammonium citrate, citric acid (2%), formic acid (2%), or acid ammonium citrate (pH = 3). The relationship between the rock reactivity and crop response has been reported by León et al. (2) in an article which classifies 11 Latin American phosphate rocks. This article classifies phosphate rocks into four groups according to their agronomic effectiveness relative to that of TSP. Panicum maximum was used as a test crop on an Oxisol from the Colombian Eastern Plains. The 11 Latin American phosphate rocks were classified as: highly effective (85%-100%),[1] medium effectiveness (70%-84%), low effectiveness (40%-69%), and very low effectiveness (<39%).

According to this classification, Colombian phosphate rocks were classified into the medium effectiveness (Huila and Pesca) and low effectiveness (Sardinata) groups. The Iza rock was not included in that classification since it was not available at the time the experiment was conducted, but according to its chemical composition, it should be classified similarly to the Pesca and Huila rocks.

Particle Size of the Rock

Experiments conducted by the IFDC/CIAT Phosphorus Project have shown that phosphate rocks are most effective when surface contact between the rock particles and the soil is maximized to promote dissolution of the rock (3). Experimental research results confirm that finely ground (less than 100-mesh) or minigranulated (minus 50- plus 150-mesh) rock is more effective than coarser sizes.

Properties of the Soil and Climate of the Region

The chemical and physical properties of GPR are important factors in determining its agronomic effectiveness. However, good characteristics of the

1. The numbers in parentheses indicate the relative agronomic effectiveness, as compared with TSP, for each grouping.

rock alone do not guarantee a proper crop response. Through research conducted by this project (3) and by others (4), it has been determined that the properties of the soil play a major role in the determination of the agronomic performance of phosphate rocks. It has been found that of all soil characteristics, the pH, the amount of available P or exchangeable calcium, and the P-fixation capacity play a major role in the effectiveness of phosphate rocks.

In the case of Huila and Pesca phosphate rocks, it has been determined that they perform well in acid soils (pH of 5.5 or less), having a P-fixation capacity of less than 45% (as measured by the Fassbender and IGUE method) and a P content of less than 5 ppm (Bray I) (5).

Results from experiment station and farmers' fields with Huila phosphate rock on the Andepts and Oxic Inceptisols of Cundinamarca, Boyacá, Cauca, and Nariño have shown the rocks to be less effective than when applied to Oxisols of the Eastern Plains (Meta) and Ultisols of Santander de Quilichao (Cauca), which are more acidic, lower in calcium, and exhibit a lower P-sorption capacity. A representative example of experimental results obtained with potatoes, rice, cowpeas, maize, and beans using this rock on these soils is presented on Table 1. Results in this table and on the following tables are presented in terms of the relative agronomic efficiency (RAE)[2] using TSP as reference. This table also includes the crop yields of the control plots, which are useful to measure yield increases due to fertilizer use and to have an idea of the soil natural fertility.

Experimental results presented in Table 1 indicated that in general the agronomic performance of the phosphate rocks (Huila and Pesca) exhibits wide fluctuations across locations, soil types, and crops. This table shows that phosphate rocks are more effective on the acid, low fertility Oxisols and Ultisols than on the Andepts and Inceptisols. In the Oxisols and Ultisols phosphate rocks can be about 90% as effective as TSP, while on the Andepts and Inceptisols their effectiveness can be as low as 5% to 10%.

The Andepts soils in Nariño appear to contradict this statement; however, phosphate rock has performed consistently well in these soils which have a high P content. These soils have been heavily fertilized with compound fertilizers for many years and are high in available P as opposed to the Andepts of Cundinamarca and Boyacá.

Throughout the many experiments that have been conducted in pursuit of the objectives of this project, it has been noted that climate (temperature

---

2. RAE is defined as: $\frac{\text{(Yield of Tested Product Less Control Yield)}}{\text{(Yield of Standard Product Less Control Yield)}}$

Table 1. Relative Effectiveness of Huila (HPR) and Pesca (PPR) Phosphate Rocks on Different Crops and Soil Types

P Source	Location	Soil Type	Crop/Rate[a]	Yield (kg/ha)	RAE (%)
TSP	Tausa, Cundinamarca	Andept	Potatoes	24,033	100
HPR			150 kg/ha	2,700	7
Control				1,066	
TSP	Ipiales, Nariño	Andept	Potatoes[b]	24,628	100
HPR			180 kg/ha	22,321	76
Control				15,003	
TSP	Ipiales, Nariño	Andept	Maize/Beans[c]	7,315	100
HPR			60 kg/ha	7,135	92
Control				4,863	
TSP	Carimagua, Meta	Oxisol	Rainfed Rice	4,819	100
HPR			40 kg/ha	4,795	99
Control				1,172	
TSP	Villavicencio, Meta	Oxisol	Irrigated Rice	5,510	100
HPR			25 kg/ha	4,929	51
PPR				4,996	57
Control				4,314	
TSP	Carimagua, Meta	Oxisol	B. Decumbens	32,400	100
HPR			44 kg/ha	31,750	96
PPR				35,950	120
Control				14,400	
TSP	Quilichao, Cauca	Ultisol	Maize	4,491	100
HPR			87 kg/ha	3,370	40
Control				2,617	
TSP	Pescador, Cauca	Inceptisol	Maize	872	100
HPR			50 kg/ha	111	13
Control				0	
TSP	Pescador, Cauca	Inceptisol	Beans	1,089	100
HPR			140 kg/ha	308	27
Control				45	
TSP	Caldono, Cauca	Inceptisol	Cassava[d]	23,232	100
HPR			82 kg/ha	12,631	18
Control				10,300	

a. Application rates are in kilograms of P/ha.
b. Average of 5 experiments.
c. Average of 9 experiments. Yield expressed in maize equivalents.
d. Average of 3 experiments.

and rainfall) influences crop response to phosphate rock application. In the lowland and mid-altitude tropics (0-1,000 and 1,000-2,000 m above sea level, respectively) with temperatures of more than 24°C and between 18° and 24°C, respectively, crops responded to phosphate rock applications, provided that the soil chemical conditions were adequate for rock dissolution. In these two regions where the agronomic effectiveness of the phosphate rock was high, the climate was classified as subhumid (1,000-2,000 mm rainfall/year). The high temperature of the soil and the adequate amount of humidity favor rock dissolution.

In the high and very high altitude tropics (2,000-3,000 and 3,000-4,000 m above sea level, respectively), mean annual temperatures range from 12° to 18°C and from 6° to 12°C, respectively. In these two regions, where potato, wheat, and barley are grown, mean annual rainfall is between 500 and 1,000 mm. Experiments performed by IFDC and the Instituto Colombiano Agropecuario (ICA) in these two regions with potatoes show that a better response to phosphate rock was obtained in the high altitude region than in the very high altitude. Apparently the very cold temperature of the soil does not favor the dissolution of the rock.

Timing and Method of Application

Research conducted at experimental stations and in farmers' fields has shown that higher crop yields can be obtained applying TSP in situ rather than broadcasting at planting time. When GPR is used as the P source, slightly higher yields can be obtained applying the rock broadcasted followed by incorporation, preferably 30 days before planting time. To illustrate this, Table 2 presents the results of three experiments (beans, potatoes, and maize) where the application method and the timing of application were tested. This table shows that, as expected, the highest yields were obtained with TSP applied in situ at planting time. The GPR was slightly more effective when it was applied broadcasted and incorporated 30 days before planting.

Application of GPR broadcasted and incorporated 30 days before planting is not practical for steep lands subject to erosion. In these areas, where minimum tillage is widely used, GPR can be applied to a reduced volume of soil. Also, the application of fertilizers 30 days before planting promotes the development of weeds. These two limitations on using this product should be carefully evaluated before specific recommendations are made to these areas.

Type of Crop and Farming System Used

Research results indicate that even under appropriate soil conditions, GPR is more effectively used by crops such as pastures, forage legumes, cowpeas, peanuts, and rice than by crops such as maize, beans, and potatoes. The

Table 2. Effect of Method and Timing of Application of Huila Phosphate Rock (HPR) and TSP

P Source	Location	Application Method	Crop/Rate	Yield (kg/ha)	RAE (%)
TSP	Tausa, Cundinamarca	Placed	Potatoes	24,033	100
HPR		Broadcasted	150 kg/ha	2,700	7
HPR		Placed		2,600	7
Control				1,066	
TSP	Pescador, Cauca	Placed	Beans	1,203	100
TSP		Broadcasted	100 kg/ha	1,141	95
HPR		Placed		384	28
HPR		Broadcasted		508	39
Control				68	
TSP	Pescador, Cauca	Placed	Maize	872	100
TSP		Broadcasted	50 kg/ha	710	81
HPR		Placed		87	10
HPR		Broadcasted		111	13
Control				0	
TSP	Pescador, Cauca	At planting	Beans	1,101	100
TSP		30 days BP	100 kg/ha	856	78
HPR		At planting		487	44
HPR		30 days BP		502	46
Control				0	
TSP	Tuquerres, Nariño	Placed	Potatoes	46,013	100
HPR		Broadcasted	150 kg/ha	41,951	56
HPR		Placed		41,193	47
Control				36,837	

reasons for this are partly related to the climatic conditions (temperature, rainfall, and length of plant life cycle) where crops are grown and partly due to the plant ability to uptake P from the soil.

Table 1 presents research results of experiments conducted with rice, cowpeas, cassava, pastures, maize, and potatoes in different agroclimatic regions of Colombia. As this table shows, the RAE of the phosphate rock ranges from 120% for pastures in Carimagua to 13% for maize in Pescador, Cauca, and 7% for potatoes in Tausa, Cundinamarca.

Residual Effect of GPR

Another factor to be considered in the agronomic evaluation of P sources is their residual effect. Research conducted by the project on pastures (*Brachiaria decumbens*) has indicated that GPRs of medium reactivity, like Huila, increase their agronomic efficiency with time, and their residual effect equals that of TSP by the third crop. In the case of rocks with slightly lower reactivity, like Pesca, their agronomic efficiency increases during the first three crops and has been noted to reach a RAE of 82% by then.

Experiments carried out to measure residual effect of TSP and Huila phosphate rock on crop rotations like beans/maize/wheat and potatoes/wheat/wheat have indicated that there are no differences in residual effect from these sources (6). What research results clearly indicate is that in places where the agronomic effectiveness of the phosphate rock is equal to that of TSP, this effectiveness remains constant through time, i.e., as TSP crop yields decrease on subsequent crops so do phosphate rock yields. Also in soils where the phosphate rock is not as effective as TSP during the first crop, the residual effect of the phosphate rock remains a fraction of that of TSP through time (3).

Use of Phosphate Rocks as Soil Amendment

Phosphate rock is presently used by farmers as a soil amendment on low P and acid soils. To measure the effectiveness of phosphate rock as a soil amendment, experiments were carried out by the project to compare Huila phosphate rock (1 tonne/ha), dolomitic lime (1 tonne/ha), and a mixture of lime and phosphate rock (0.5 tonne/ha of each) on beans in Pescador, Cauca.

The results of these experiments appear in Table 3. These results indicate that Huila phosphate rock used alone or in combination with dolomitic limestone produces higher yield increases than dolomitic limestone alone. These results were consistent for the two seasons in which the experiments were carried out. In one of the experiments the mixture of phosphate rock and limestone gave the highest yield increases, while the Huila phosphate rock alone gave the highest yield in the other two.

Agronomic Evaluation of PAPR

The low or poor performance of phosphate rocks in some soils and with some crops can be attributed to its low solubility; hence, its P is not available for the crop's uptake. A common way to increase its solubility is to acidulate the rock totally to make SSP or TSP, or to acidulate it partially to make PAPR. By increasing the solubility of the rock, its agronomic efficiency increases, which results in higher crop uptake and hence in higher crop

Table 3. Agronomic Effectiveness of Huila Phosphate Rock Used as Soil Amendment on Beans, Pescador, Cauca

Amendment	First Crop		Second Crop	
	Yield	RAE	Yield	RAE
	(kg/ha)	(%)	(kg/ha)	(%)
HPR	344	100	230	100
Limestone	101	27	157	68
Limestone + HPR	314	91	184	80
Control	10		0	
HPR	311	100	341	100
Limestone	85	3	99	
Limestone + HPR	205	55	300	78
Control	78		151	
HPR	585	100	808	100
Limestone	561	94	774	95
Limestone + HPR	707	129	915	115
Control	159		109	

yields. Results presented here for PAPR correspond to phosphate rocks acidulated at a 50% level. Results obtained with experiments carried out by the project have indicated that physical dry mixtures of phosphate rock with TSP or DAP, simulating PAPR products, give the same agronomic results as a PAPR product. Therefore, results presented here also apply to those mixtures.

Through research conducted in this project, it has been found that the best fertilizer management practices for the use of PAPR are the same as those for TSP. This means that the best timing and method of application for TSP are also the best for PAPR.

Table 4 presents experimental results obtained with PAPR and its RAE when compared with TSP. These results show that PAPR can be, in some cases, as effective as TSP, but that its RAE most often ranges between 80% and 92%. This holds true for a wide variety of soils, agroclimatic conditions, and crops. In the acid, low fertility Oxisols and Ultisols of the Eastern Plains, PAPR applied to pastures, rice, and sorghum performed as well as TSP. In the Andepts soils of Nariño, PAPR can give higher potato and maize/beans

Table 4. Relative Agronomic Effectiveness of PAHPR and PAPPR as Compared to TSP on Different Soils and Crop Types[a]

P Source	Location	Soil Type	Crop/Rate	Yield (kg/ha)	RAE (%)
TSP	Motavita, Boyacá	Andept	Potatoes	24,300	100
PAHPR			150 kg/ha	20,640	80
Control				5,610	
TSP	Ipiales, Nariño	Andept	Potatoes[b]	24,628	100
PAHPR			150 kg/ha	25,914	113
Control				15,003	
TSP	Ipiales, Nariño	Andept	Maize/beans[c]	7,315	100
PAHPR			60 kg/ha	7,435	105
Control				4,863	
TSP	Pescador, Cauca	Inceptisol	Beans	1,248	100
PAHPR			120 kg/ha	1,151	88
Control				454	
TSP	Pescador, Cauca	Inceptisol	Maize	1,580	100
PAHPR			150 kg/ha	1,448	92
Control				0	
TSP	Villavicencio, Meta	Oxisol	Irrigated Rice	4,793	100
PAHPR			25 kg/ha	4,743	92
Control				4,178	
TSP	El Caibe, Meta	Oxisol	Sorghum	2,331	100
PAHPR			100 kg/ha	2,336	105
PAPPR				2,340	109
Control				2,228	
TSP	Caldono, Cauca	Inceptisol	Cassava[d]	23,232	100
PAHPR			82 kg/ha	20,876	82
Control				10,300	

a. PAHPR = Partially acidulated Huila phosphate rock.
PAPPR = Partially acidulated Pesca phosphate rock.
b. Average of 5 experiments.
c. Average of 9 experiments. Yield expressed in maize equivalent.
d. Average of 3 experiments.

yields than TSP. On the other hand, in the Boyacá potato areas, yields obtained with PAPR are about 80% of those obtained with TSP (7).

Economic Evaluation of P Sources

The economic evaluation refers to the estimation of net returns (or benefits) which accrue to the farmer from the use of fertilizers. Net benefits due to fertilizer use are defined as the difference between the increased production value minus the cost of the fertilizer used. To estimate the value of the increased production value, crop prices received by the farmer are used, while to estimate the cost of the fertilizer, prices paid by farmers are used.[3] Since PAPR is a product not available in the market, its evaluation was done assuming that its price was equal to that of TSP on a P unit basis. Therefore the economic performance of PAPR as compared with that of TSP is directly related to the RAE of these two products as presented in Table 4. In the future, should PAPR be available to farmers at prices higher/lower than those used for the evaluation here, the relative economic effectiveness (REE) will be lower/higher in relation to TSP.

Since the amount of net returns due to fertilizer use changes as crop and fertilizer prices change, value:cost ratios (VCR), which measure the relationship between the increased value of production and the fertilizer cost, were calculated. VCRs are less subject to variation due to price changes and do not change in situations where crop and fertilizer prices change at the same pace. VCRs provide an identification of how safe it is to invest resources in fertilizer. To induce a farmer to use fertilizers, a VCR value of at least two is needed. A VCR lower than two indicates that the use of fertilizer is too risky to be acceptable.

The REE measures the relative economic effectiveness of PAPR and phosphate rock in relation to that of TSP. The REE is simply the ratio of net returns obtained with PAPR and phosphate rock and the net returns obtained with TSP. For the economic evaluation presented here, the estimation of all these economic parameters was made at the application rate that maximized net returns for each product tested.

Table 5 presents selected examples of the economic evaluation of experimental results obtained. This table includes research results from several crops in different agroclimatic zones and in different soil types of the country. As can be seen from this table, the estimated REE of PAPR ranges

3. Prices used were for TSP and PAPR Col $200/kg of P, for HPR and PPR Col $125/kg of P, for rice Col $42/kg, for cassava Col $35/kg, for maize Col $32/kg, for potatoes Col $20/kg, and for beans Col $120/kg.

Table 5. Economic Evaluation of Different P Sources

P Source	Location	Soil Type	Crop	Application Rate (kg/ha)	Yield (kg/ha)	VCR	REE (%)
TSP	Tausa, Cundinamarca	Andept	Potato	150	24,033	15.3	100
HPR				0			0
Control					1,066		
TSP	Ipiales, Nariño	Andept	Potato[a]	180	24,628	5.3	100
PAHPR				180	25,914	6.1	116
HPR				180	22,321	6.5	79
Control					15,003		
TSP	Motavita, Boyacá	Andept	Potato	150	24,300	12.5	100
PAHPR				150	20,640	10.0	79
Control					5,610		
TSP	Pescador, Cauca	Inceptisol	Beans[a]	104	841	4.4	100
PAHPR				92	738	4.4	86
HPR				39	142	2.3	5
Control					71		
TSP	Pescador, Cauca	Inceptisol	Maize	150	1,965	2.1	100
PAHPR				100	1,428	2.3	78
HPR				0			0
Control					0		
TSP	Caldono, Cauca	Inceptisol	Cassava	82	23,232	27.6	100
PAHPR				82	20,876	22.6	81
HRP				82	12,631	8.0	16
Control					10,300		
TSP	Villavicencio, Meta	Oxisol	Irrigated Rice[b]	29	4,819	4.6	100
PAHPR				39	4,819	3.5	91
HPR				32	4,658	5.0	77
PPR				24	4,650	6.6	80
Control					4,178		
TSP	Carimagua, Meta	Oxisol	Rainfed Rice	40	4,436	16.1	100
HPR				40	4,458	26.6	101
Control					1,172		

a. Average of 5 experiments.
b. Average of 4 experiments.

from 78% to 116%. The REE for PAPR is above 100% in the Eastern Plains soils (Oxisols) and the Nariño soils (Andepts). Lower REE for PAPR is observed in the soils of Caldono, Cauca (Inceptisols), and in the soils of the Cundinamarca-Boyacá region (Andepts).

Phosphate rock used for direct application had the lowest REE of the products tested. The REE for phosphate rock was higher in the Eastern Plains soils (Oxisols) and in the Nariño area (Andepts). The lowest REE for phosphate rock was observed in the Cundinamarca-Boyacá soils (Andepts) and in the soils of Pescador, Cauca (Andepts). In some of these soils there was not a large enough crop response to applications of phosphate rock, so as to justify its application.

Results presented here indicate that PAPR and GPR produced a higher REE on the same type of soils (Oxisols of the Eastern Plains and Nariño Andepts). In places where PAPR applications were not very effective, applications of phosphate rock were not effective at all.

Table 6 presents the results of the economic evaluation of the phosphate rock used as a soil amendment in three experiments conducted during two consecutive crop seasons. The effectiveness of GPR as a soil amendment is determined by the amount of free calcium carbonates it has. Therefore, results discussed here apply only to the Huila phosphate rock, which has the largest percentage of carbonates among the Colombian rocks.

Table 6 shows that in all three experiments either the Huila phosphate rock used by itself or mixed with limestone produced higher yields and had a higher REE than limestone used alone. According to the VCR obtained with these experiments, it can be stated that compared with dolomitic limestone the use of phosphate rock as soil amendment is a good investment for farmers. Obviously, the higher yield increases obtained with the Huila phosphate rock are due to the P content of the rock and to its liming effect. However, these findings are preliminary, and more research in this area is needed to better identify the soils where the rock can be used effectively as an amendment, the proper mix rock-limestone and to determine yield increases due to the phosphate content and to the liming effect of the rock.

Summary and Conclusions

Results obtained by the "IFDC/CIAT Phosphorus Project" have shown ample evidence that the effectiveness of GPR for direct application depends on many factors, among them: the chemical reactivity of the rock, the particle size of the material applied to the soil, the agroclimatic properties of the

Table 6. Economic Analysis of Phosphate Rock Used as a Soil Amendment, Beans, Pescador, Cauca

Amendment	Yield First Crop	Yield Second Crop	VCR[a]	REE
	(kg/ha)	(kg/ha)		(%)
Phosphate Rock	344	230	4.1	100
Limestone	101	157	2.1	41
Mixture	314	184	5.3	91
Control	10	0		
Phosphate Rock	311	341	2.8	100
Limestone	85	99	-	-
Mixture	205	300	2.4	61
Control	78	151		
Phosphate Rock	585	808	8.6	100
Limestone	561	774	20.9	101
Mixture	707	915	15.5	127
Control	159	109		

a. Prices used were:

Phosphate rock	Col $12,000/t
Limestone	Col $5,000/t
Beans	Col $1?0/kg

Second crop price discounted at 30%.

region, the timing and method of application, and the crop and farming system used.

Research carried out in Colombia indicates that PAPR could be used effectively as a P source on a wide variety of crops and in major agricultural regions. Selected GPR could be used as a source of P only in carefully identified areas and on a few crops where its effectiveness has been proved. In the case of the Huila phosphate rock, it can also be effectively used as a soil amendment.

It can be stated that GPR and PAPR could be used to partially meet the needs of P in the country, hence, saving foreign exchange. However, because these two products have, in general, lower RAE and lower REE

than soluble P sources like TSP, their prices should be set accordingly so as to induce farmers to use them.

References

1. Martínez, A. 1988. "The Phosphate Fertilizer Sector in Colombia. Supply Alternatives and Policy Options," International Fertilizer Development Center (IFDC), Muscle Shoals, AL, p. 24-27 (mimeo).
2. León, L. A., W. E. Fenster, and L. L. Hammond. 1986. "Agronomic Potential of Eleven Phosphate Rocks From Brazil, Colombia, Peru, and Venezuela," Soil Science Society of America Journal, 50(3):798-802.
3. León, L. A., and L. L. Hammond. 1984. Efectividad Agronómica de las Rocas Fosfóricas del Trópico Latinoamericano, p. 211-252. In Ricaldi V and S. Escalera (ed.). "La Roca Fosfórica, Fertilizante Directo de Bajo Costo." Tomo II. Aplicación Agricola. GLIRF, Casilla 183, Cochabamba, Bolivia.
4. Hughes. J. C., and R. J. Gilkes. 1986. "The Effect of Rock Phosphate Properties on the Extent of Fertilizer Dissolution in Soils," Australian Journal of Soil Research, 24:209-217.
5. Fassbender, H. W. and Y. K. Igue. 1967. "Comparación de Métodos Radiométricos y Colorimétricos en estudios sobre retención de fosfatos en Suelo," Turrialba, Costa Rica 17:284-287.
6. IFDC/CIAT Phosphorus Project. 1986. "Annual Report 1985," CIAT, Cali, Colombia (mimeo).
7. Martínez, A., L. A. León, and J. Navas. 1987. Uso Potencial de Rocas Fosfóricas y de Rocas Fosfóricas Parcialmente Aciduladas en la Agricultura Colombiana, p. 243-270. In León L. A. and O. Arregocés (ed.). "Alternativas Sobre el Uso Como Fertilizante de Fosfatos Nativos en América Tropical y Subtropical," Documento de Trabajo No. 46, CIAT, A.A. 6713, Cali, Colombia.

Micronutrients in Latin American Agriculture – An Overview of the Basic Concepts

James M. Wyatt, Senior Vice President-Operations, Frit Industries,Inc. – United States

Introduction

Micronutrients are used in less quantity but are of no less importance than nitrogen, phosphate, or potash. Micronutrients are of major importance in the Latin American region where 60% of the soils are deficient in one or more elements. As more efficient food production methods are employed in an effort to improve yields, maintain vitality of the soils, and improve the quality of the crops, micronutrients become even more important.

The Micronutrients

The elements that are recognized as micronutrients are boron, copper, iron, manganese, zinc, molybdenum, cobalt, and chlorine. Chlorine is rarely of concern due to the amount of chlorine supplied by potassium chloride.

The chemical forms in which micronutrients are available are oxides, sulfates, synthetic chelates, organic chelates, oxide-sulfate combinations, and slow-release glass-like forms (frits).

The physical forms in which micronutrients can be purchased are granular, powder, spray-dried powders, and liquids.

The form needed depends on the application method, timing of the application, and the manufacturing system employed. For example, oxides should be used in an ammoniation/granulation system, rather than sulfates or chelates; this is because in the granulation process ammonia will strip the sulfate off as ammonium sulfate and the chelate will be destroyed by radical changes in pH and by the heat of the chemical reactions that occur during granulation. If foliar sprays are employed, spray-dried sulfates or chelates must be put into a liquid form and sprayed. Oxides will also work, but excellent agitation and a micro particle size is required. For soil application, granular oxide-sulfate combinations work just as well as granular sulfates. When applied with nitrogen solutions during sidedressing, chelates or ammoniated sulfates must be used to avoid compatibility problems. No one

form of micronutrient is correct in all circumstances, but it is important to remember that if one kilo of an element is needed, you must apply one kilo of the element. There is no magic that will make one-tenth of a kilo supply all that is needed.

Cost Comparison

Cost considerations must play a role in the decision of what is to be used. The cost per kilogram of element (micronutrient) varies according to its chemical and physical form. To illustrate, if we use the least pure form of oxide powder as the base cost having a value of 1, a rough approximation of the cost differences (ratio) for different forms follows:

Cost Ratio	Form
1.0 to 3.0	Powdered oxides
1.2	Granular oxides
1.1 to 1.4	Granular oxide-sulfate mixtures
2.3	Granular sulfates
2.8	Spray-dried sulfates
10.0	Organic chelates
20.0 to 28.5	EDTA, EDDHA, HEDTA chelates

The variation in prices is due to a number of factors, including purity of the product, equipment required, energy costs associated with production, quantity that is produced, and the number of competing manufacturers (sources of supply).

The important thing to remember is that the use of the correct amount of micronutrients along with nitrogen, phosphate, and potassium should be based on the needs of the soil and crops. Also, using the correct amount of nitrogen, phosphate, and potassium without using the optimum amount of micronutrients is wasted effort, just as using micronutrients without using the correct amount of nitrogen, phosphate, and potash is a waste.

North American Raw Material Supply Options and Outlook for the Caribbean and Latin American Region

Garry L. Pigg, Manager, Special Marketing Projects, Agrico Chemical Company – United States

Background

With its vast arable land mass and a climate well suited for food production, North America experienced unprecedented growth in its agricultural sector since the turn of the century. Having also been blessed with an abundance of all the natural resources required for manufacturing fertilizers, it was well positioned to become a leading supplier of food for a rapidly growing world population. With close to 120 million ha of land being harvested in 1965, there was a demand for rather large quantities of fertilizers. In fact, 29 million tonnes of fertilizer was consumed in that year. By 1985 consumption had reached 48 million tonnes with around 140 million ha of harvested croplands. Then, by 1988, fertilizer consumption had fallen to 40 million tonnes and harvested land had dropped back to the 1965 level of 120 million ha.

To adequately provide for these large and ever-growing demands for fertilizer, the North American industry responded by (1) building larger, more efficient production facilities; (2) producing higher analysis fertilizer products to reduce distribution and application costs; and (3) developing bulk-blending systems at the small producer and dealer levels to reduce their storage costs while still supplying custom mixes to the farmer.

We have seen, over the past 20 years, the evolution of the 1,000+ tpd fertilizer plant. We have seen the shift from ammonium nitrate and ammonium sulfate to the higher analysis urea nitrogen fertilizer, and a shift from aqua ammonia to urea-ammonium nitrate (UAN) solutions. We have seen diammonium phosphate (DAP) grow not only as a dry blend base material, but also as a direct application N-P fertilizer (from 500,000 tonnes of consumption in 1965 to 3.2 million tonnes in 1988). We have seen the emergence of other mass produced N-P fertilizers such as MAP, 10-34-0 (liquid), and 16-20-0: the latter having gained popularity over the past 10 years because of its soluble sulfur content. NP fertilizer consumption now comprises 35% of all direct application multiple-nutrient fertilizers in the United States. We have seen NPK fertilizer consumption, on the other hand,

drop from 14 million tonnes in 1965 to almost 9 million tonnes in 1988. Over the same period, chemical mix consumption dropped to around 2 million tonnes; and, with this, we have seen MAP/DAP/GTSP capacity increase even further and the evolution of granular urea and, more recently, granular ammonium sulfate.

Today in the United States 80% of the nitrogen is consumed as straight N fertilizers, with 8% of the phosphate and 64% of the potassium being applied as single-nutrient products (GTSP/SSP & KCl/SOP). The balance of these nutrients is being applied as multiple-nutrient fertilizers. Of these, 57% are NPKs; 34% are NPs; 4% are NKs; and 5% are PKs.

Combining all of the above figures, 60% of U.S. fertilizer consumption in 1988 was in the form of single-nutrient products (mostly nitrogen) and 40% was as multiple-nutrient fertilizers. And, 21% of all fertilizers consumed were bulk blends (NPK, NP, NK, PK) while 4% were chemical mixes.

Throughout the 1950s, 1960s, and 1970s, North American fertilizer production capacity grew even faster and greater than its consumption demand. And, it was during this time that North America became a leading exporter of fertilizers as well as food products. As time went by many changes occurred in the world, politically and socioeconomically. Quite naturally the agricultural business was caught up in these changes. Through the transfer of technology, the whole geophysical picture of supply (of both basic food products and of fertilizers) began to adjust more closely to the regions of demand. More countries began to produce larger and larger quantities of their own food and many began to produce at least part of their own fertilizers. Increased exploitation of fertilizer natural resources throughout the world occurred to the extent that productive capacity and world trade in fertilizers shifted away from the industrialized world (North America, West Europe, and Japan). The U.S.S.R. became the largest nitrogen producer in the world and, coupled with East Europe, the largest exporter of nitrogen. The United States is still the largest exporter of phosphate fertilizers and the largest producer of sulfur. Canada remains the largest potash exporter.

Like Japan, North America and West Europe also went through major adjustments in their fertilizer manufacturing industries ("rationalizations" is the word commonly used today), and more is coming. Japan has all but totally shut down its manufacturing sector, while the United States and Europe have stopped building new plants and have begun shutting down older plants as they become uneconomical to keep in operation. Emphasis has shifted away from new plants to increased efficiency and throughput in existing large-scale plants and in some cases the replacement of old plants with modern, more efficient technologies. And, while the growth in consumption of fertilizers in North America and West Europe is seen to be basically

flat, these two producing regions will for a long time be major suppliers of fertilizers to the world market. Even as they both become larger and larger importers of fertilizers for their own consumption, the high degree of reliability and efficiency in their manufacturing plants, coupled with their seasonal demand for fertilizers, will keep both ever present in the supply side of world trade.

Now to the matter at hand, which is supplying quality multinutrient fertilizers in the Latin American and Caribbean region, and for my part in the program, North America's role in this effort. More specifically, what are the North American raw material supply options and outlook for the Caribbean and Latin American Region?

I would like to focus primarily on nitrogen, phosphate, and potash supply capability and then touch briefly on sulfur.

Nitrogen

There are 48 "active" ammonia plants in the United States today and 12 in Canada. There are 53 "inactive" or closed plants in the United States with at least 20 in some stage of being dismantled. Canada has 6 idle plants. None of the inactive plants are likely to restart. Figure 1 shows the general location of the North American ammonia plants.

Active capacity in the United States is close to 16 million tonnes producing between 14 and 15 million tonnes of anhydrous ammonia per year. Canada adds some 4 million tonnes of production. Most of this production stays within the borders of North America for use in upgrading to fertilizers, as direct application nitrogen, and in the industrial sector. Over the past 10 years, U.S. exports have totaled less than 1 million tpy. In the 1988/89 fertilizer year, only 675,000 tonnes of ammonia was exported and 25% of this was out of Alaska for Korea. More than 40% of Canada's ammonia is exported (mostly to the United States); another 40% is upgraded into urea and 15% is upgraded into other nitrogen fertilizers (ammonium nitrate, ammonium sulfate, and ammonium phosphates). Other ammonia is imported into the U.S. Gulf Coast from the U.S.S.R., Trinidad, and others. In fertilizer year 1988/89, the United States exported only 550 tonnes of anhydrous ammonia to Latin America with virtually all going into the Caribbean region.

More importantly for this presentation, let's look at solid nitrogen fertilizers; and, urea is by far the largest product in general use in this category. As of September this year, there were 18 operating and 3 closed urea plants in the United States. Canada has 10 urea plants of which 7 are in operation.

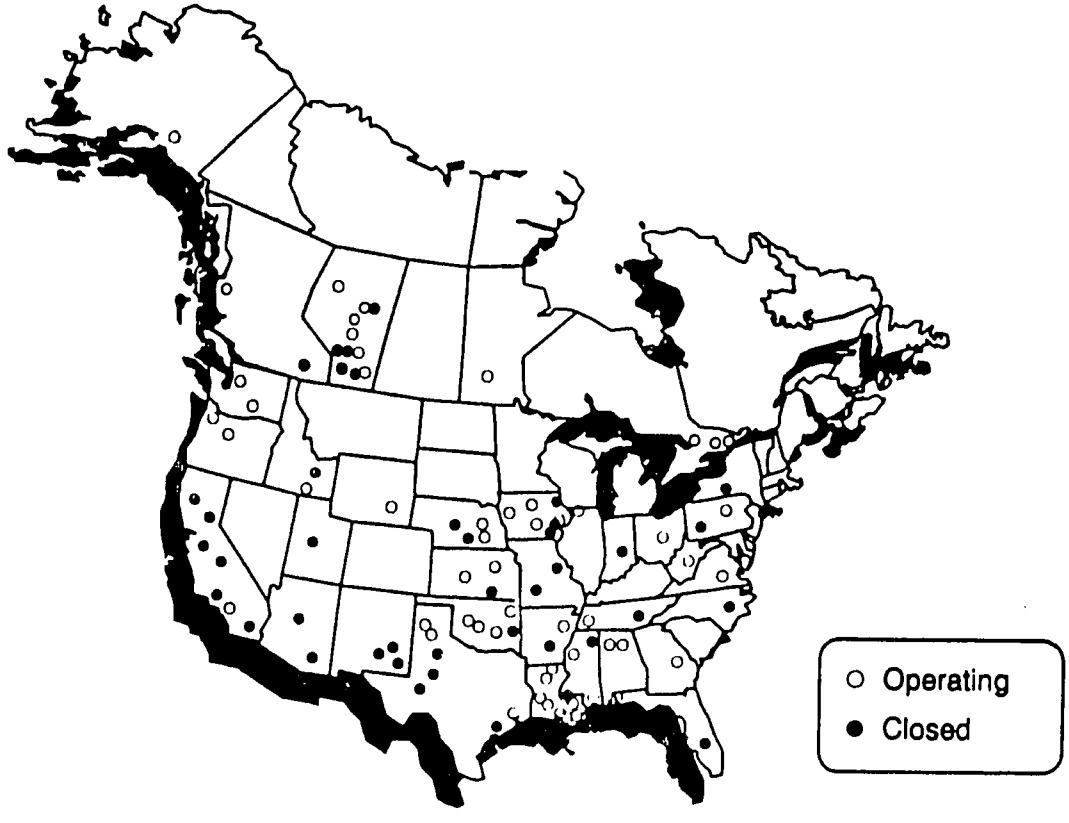

Figure 1. Ammonia Plant Locations in Canada and the United States – Total Capacity of 20.3 Million Metric Tons.

Figure 2 shows the general location of the operating urea plants in North America. There are 10 major producers in the United States comprising 95% of the productive capacity; these 10 are shown in Figure 3. As you can see, some 3.7 million tonnes of capacity is well situated for export, meaning it is located at deep water ports. This is not to say that others do not export. Farmland rails into Houston and Agrico barges some of its Arkansas production into New Orleans to export during the U.S. off-season. Unocal, in addition to supplying its U.S. west coast market out of its Kenai, Alaska plant, is the largest single exporter of urea in the United States and Canada. Cominco, Sherritt Gordon (3 plants), ESSO and CF-Canada, all in Alberta, are the largest Canadian producers of urea having a combined capacity of 2.1 million tpy. C-I-L in Ontario has a capacity of 160,000 tpy. A note to the bulk blender; 50% of the U.S. urea production is granular.

Figure 2. Location of Urea Plants Operating in Canada and the United States – Capacity of 8.1 Million Metric Tons (Product).

Of the 930,000 tonnes of U.S. urea exports in fertilizer year 1988/89, Latin America accounted for 270,000 tonnes or 29%. U.S. exports into Latin America for fertilizer years ending 1985 through 1989 are shown in Figure 4. Chile has accounted for more than half of the U.S. exports into the region since 1987, while the Dominican Republic and Haiti shifted to Trinidad and Tobago supply with the urea plant startup in Trinidad in 1986. Other significant importers of U.S. urea in 1988 were Colombia, Guatemala, Costa Rica, and Ecuador in that order with Honduras, El Salvador, Belize, and Jamaica importing lesser amounts.

Other dry, straight nitrogen materials available for export from the United States include ammonium nitrate and ammonium sulfate. The figures presented in Table 1 show that typically less than 100,000 tpy of ammonium

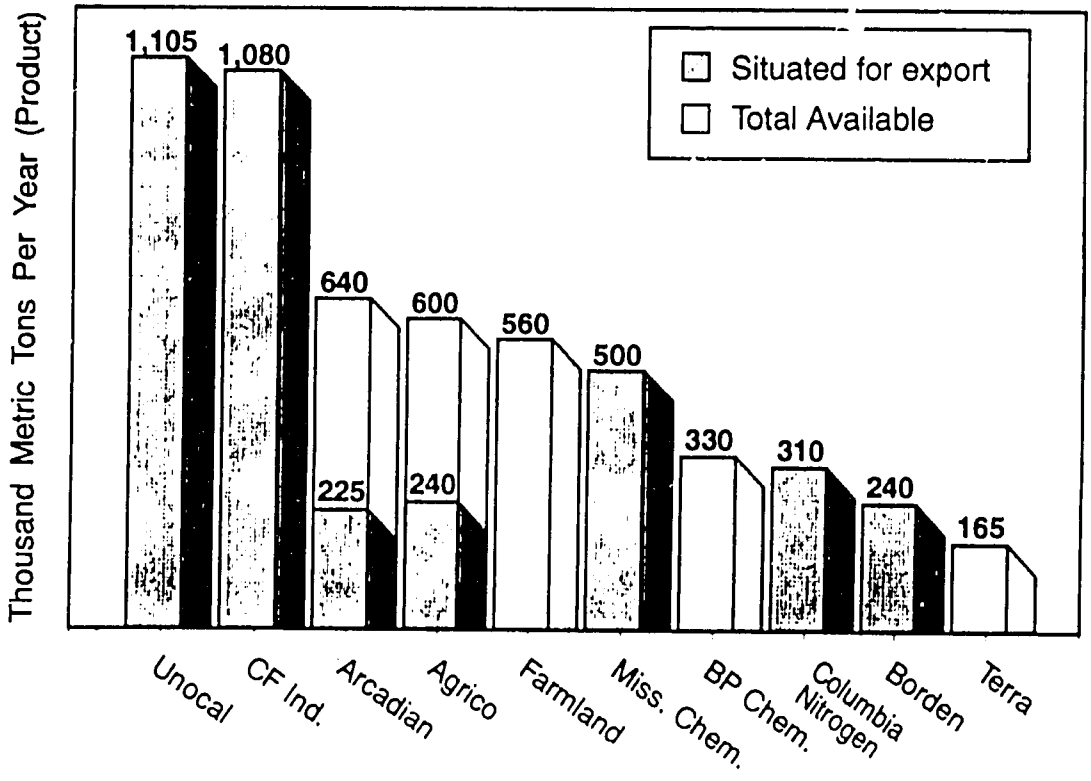

Figure 3. Urea Capacity for Major U.S. Producers.

nitrate and less than 900,000 tpy of ammonium sulfate is exported. This represents about 3% of the ammonium nitrate production and 33% of the ammonium sulfate. U.S. ammonium nitrate exports in fertilizer year 1988/89 totaled approximately 59,000 tonnes of which 8,500 tonnes went to Latin America. Of these Latin American imports, Mexico, Colombia, and the Dominican Republic accounted for 38%, 35%, and 15%, respectively. For Latin America, ammonium sulfate is the most important of these products. Figure 5 shows the ammonium sulfate exports from the United States into Latin America since fertilizer year 1985/86. Of the 763,000 tonnes of ammonium sulfate exported from the United States in fertilizer year 1988/89, Latin America imported 652,000 tonnes or 85%. Brazil accounts for more than half of these U.S. exports with El Salvador and the Dominican Republic each importing substantial amounts. Canada's ammonium nitrate and ammonium sulfate production capacities are 1 million and 400,000 tpy, respectively. Most is used internally or exported to the United States.

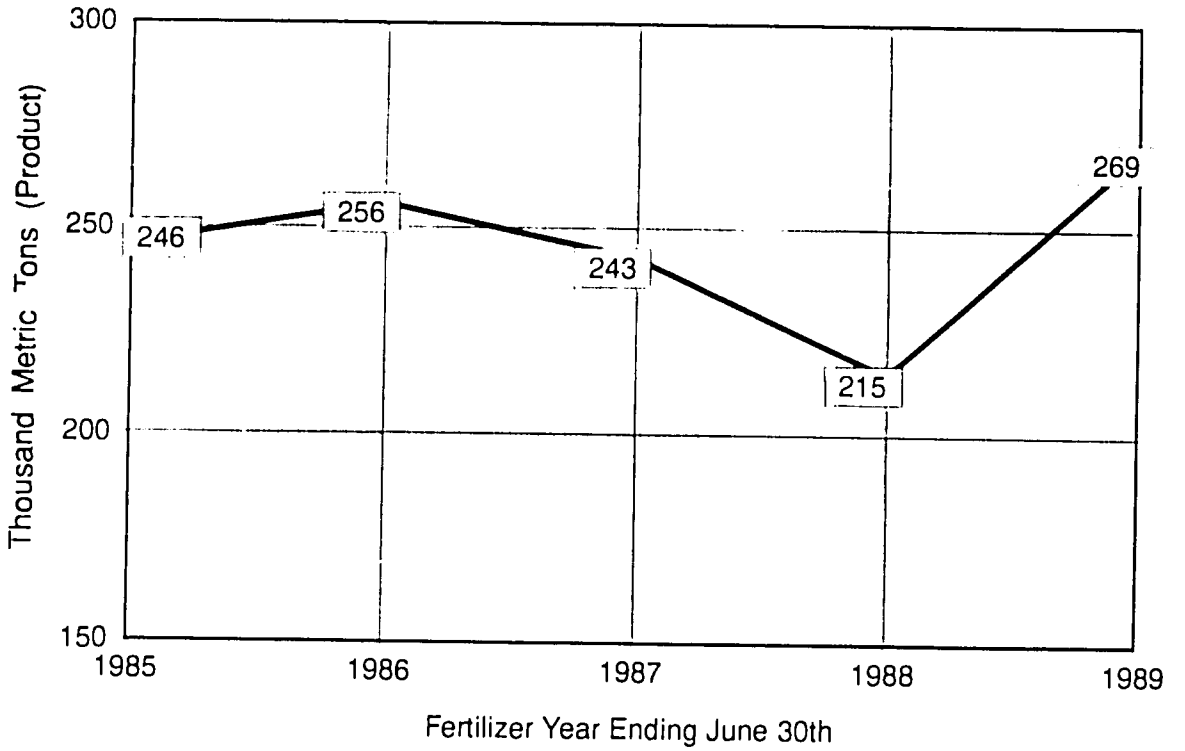

Figure 4. U.S Exports to Latin America.

Table 1. Other Dry Nitrogen Materials Available for Export

Material	Million Tonnes
Ammonium nitrate (solid)	
Capacity	4.4
Production	3.7
Exports	<0.1
Ammonium sulfate	
Capacity	2.9
Production	2.7
Exports	0.9

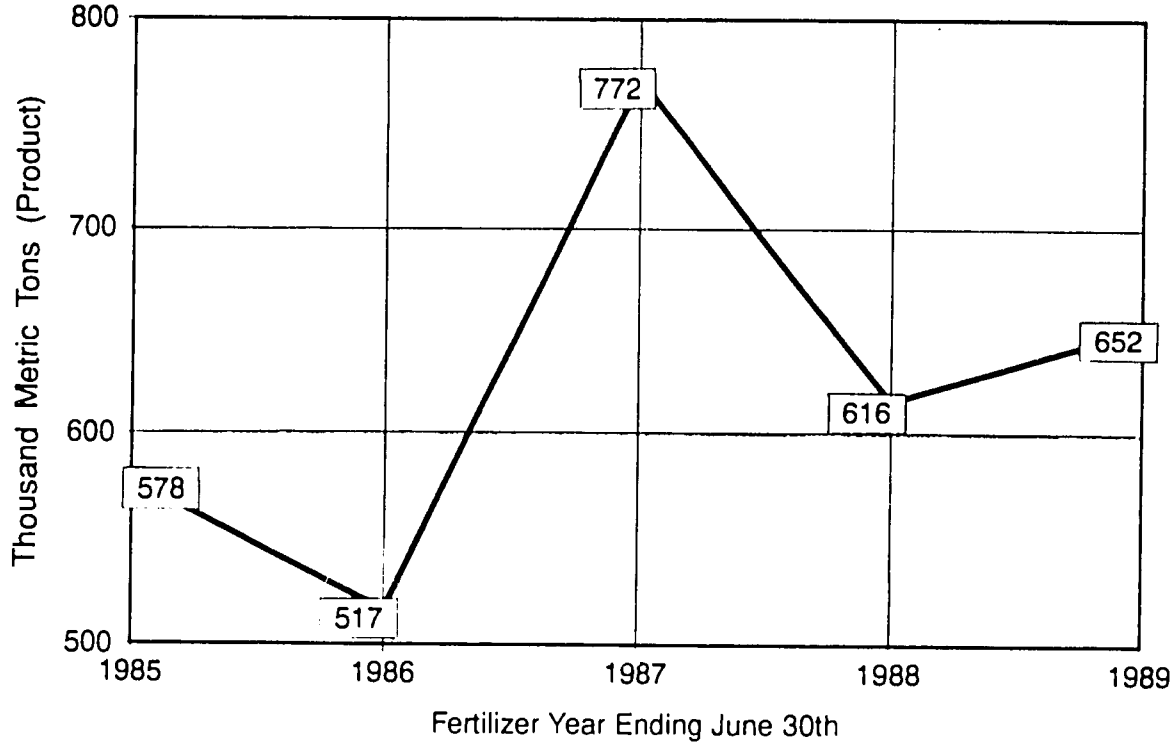

Figure 5. U.S. Ammonium Sulfate Exports to Latin America.

Another straight nitrogen fertilizer exported from the United States is sodium nitrate. The quantity of production and exports is very small and roughly half of the 2,200 tonnes exported during 1988/89 fertilizer year went to Latin America – mostly to Mexico.

As for liquid nitrogen fertilizers, the United States is the largest exporter of urea-ammonium nitrate (UAN) and also exports a small amount of aqua ammonia. Whereas Mexico, Ecuador, Chile, and several Central American and Caribbean countries have imported some UAN in the past few years, only Mexico imported UAN (770 tonnes) from the United States in fertilizer year 1988/89. Latin America imported around 4,400 tonnes of aqua ammonia in 1988/89 fertilizer year or 33% of all U.S. exports. Mexico accounted for 40% with Trinidad and Tobago, Costa Rica, Jamaica, and the Dominican Republic accounting for 11%, 10%, 8%, and 7%, respectively. Canada produces less than 100,000 tonnes of UAN per year with a large part crossing the border for U.S. markets.

"Other nitrogen fertilizers" exported by the United States into Latin America in the 1988/89 fertilizer year totaled 12,000 tonnes (22% of U.S. exports in this category of products). Mexico, Brazil, and Guatemala together accounted for 90% of these Latin American imports.

Phosphate

Today there are 23 operating and 5 closed DAP/MAP/GTSP fertilizer plants in the United States. More than 90% of this capacity is situated on the U.S. Gulf coast, either in Florida or on the Mississippi River (refer to Figure 6 for the general location of these plants). And, like urea most of the DAP/MAP capacity is in the hands of 10 major producers as shown in

Figure 6. Location of DAP/MAP/TSP Plants Operating in the United States – Capacity of 17.2 Million Metric Tons (Product).

Figure 7. With the exception of Texasgulf, which is on the east coast in North Carolina, all are either on the Mississippi River (Agrico), in Texas (Mobil), or in Florida. Total annual operating capacity is around 15 million tonnes of DAP/MAP fertilizers. GTSP production is in the hands of 5 major producers – Agrico, Gardinier, IMC, Occidental and Seminole in Florida and Texasgulf in North Carolina. Total annual operating capacity is around 2 million tonnes of TSP. Canada has around 1.2 million tpy of ammonium phosphate production capacity in operation but very little or none is exported. Another 800,000 tpy of capacity (4 plants) is idled.

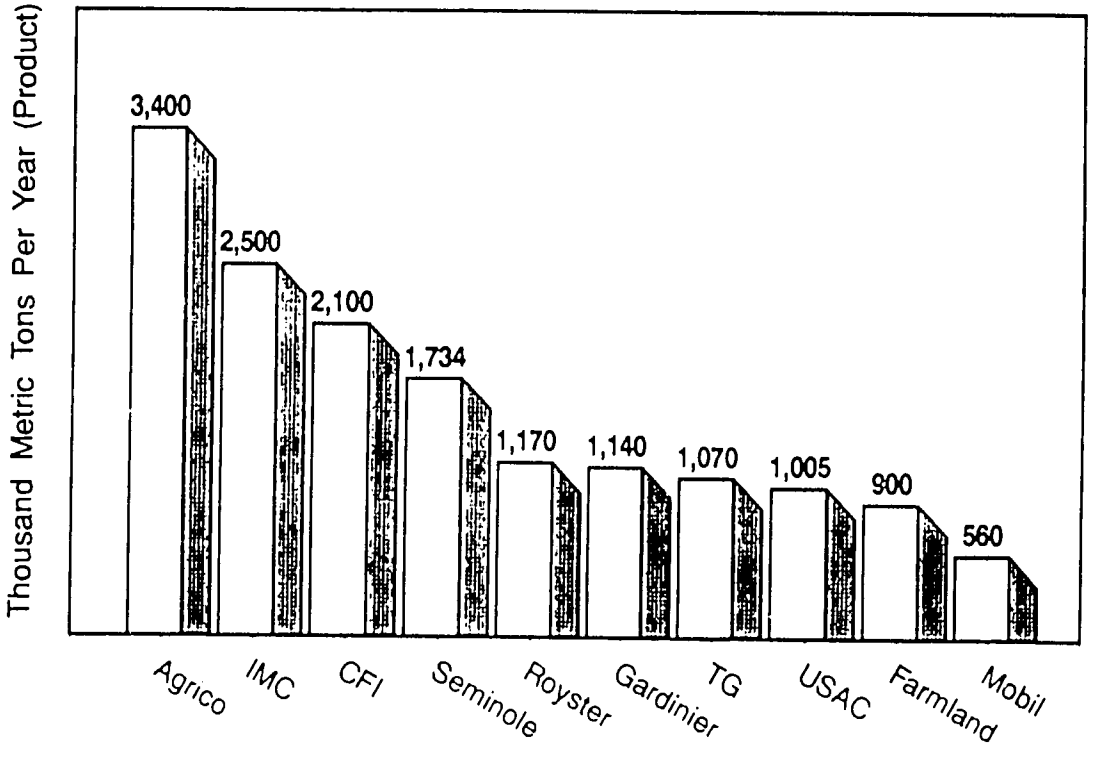

Figure 7. DAP/MAP/GTSP Capacity for Major U.S. Producers.

Of the 7.9 million tonnes of DAP, 900,000 tonnes of MAP and 740,000 tonnes of GTSP exports out of the United States in 1988/89 fertilizer year, around 560,000 tonnes of DAP (7%), 180,000 tonnes of MAP (23%), and 240,000 tonnes of GTSP (32%) was imported into Latin America. Half of these DAP/MAP imports from the United States went to Colombia, Venezuela, Chile, Argentina, Brazil, and Peru. Chile was the largest importer of U.S. GTSP accounting for 50% of the 1988/89 fertilizer year exports – Brazil and Argentina's combined imports accounted for 45%. The

distribution of DAP, MAP, and GTSP imports from the United States into this region over the past 5 years is shown in Figure 8.

Other straight phosphate materials exported from the United States include single superphosphate, phosphoric acid, and phosphate rock. The United States exported close to 5,600 tonnes of single superphosphate (28% of U.S. total exports of SSP) to Latin America during 1988/89 fertilizer year.

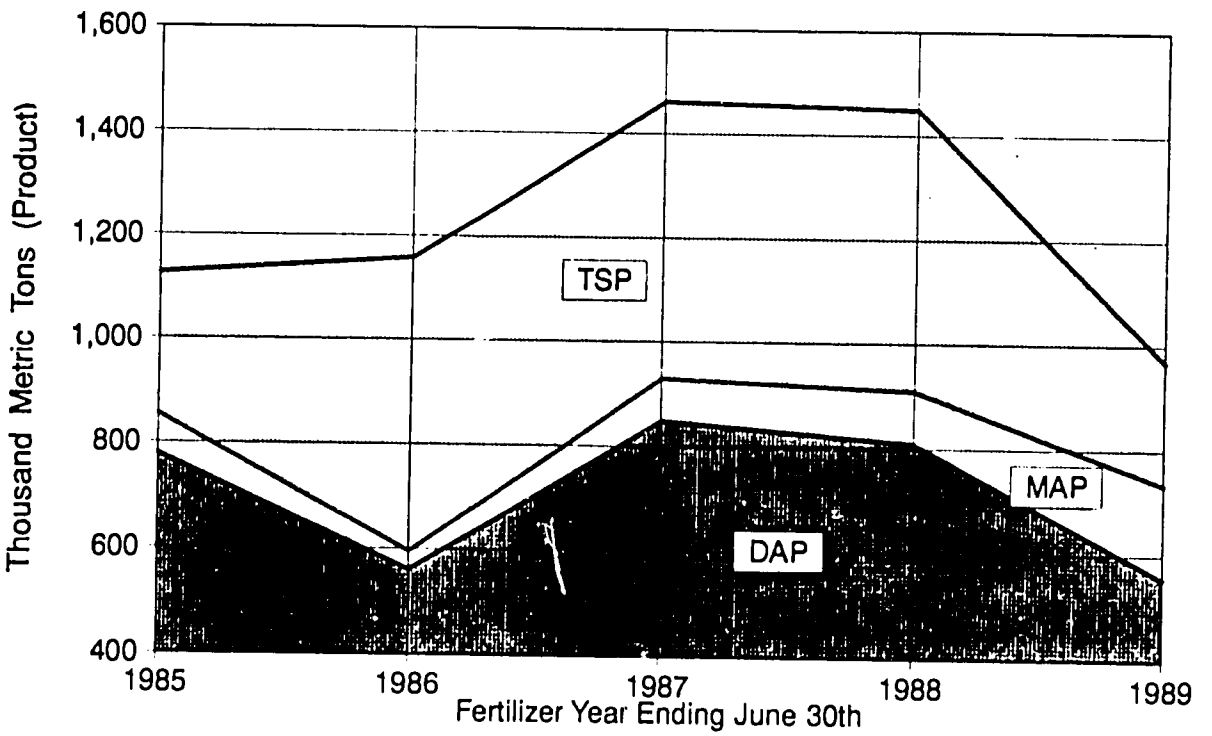

Figure 8. U.S. DAP/MAP/TSP Exports to Latin America.

Ecuador and Mexico accounted for virtually all of this business. Phosphoric acid exports from the United States in 1988/89 fertilizer year totaled approximately 520,000 tonnes (P_2O_5 basis). Of this, Latin America imported 177,000 tonnes or 34%. Venezuela accounted for 125,000 tonnes (or 70%) of these Latin American phosphoric acid imports with Brazil and Mexico accounting for 18% and 9%, respectively. Less than 500 tonnes of superphosphoric acid was exported from the United States during this same period, with Venezuela and Brazil importing the major portion. Phosphate rock exports during 1988/89 fertilizer year totaled a little more than 9 million tonnes. Latin America imported around 650,000 tonnes or 7% of the U.S.

exports during this period. Mexico accounted for 613,000 tonnes (or 85% of Latin American imports of U.S. phosphate rock) with Colombia, Chile, and Guatemala accounting for 7%, 3%, and 2%, respectively.

During 1988/89 fertilizer year, Latin America imported 900 tonnes of "other phosphate fertilizers" from the United States (about 27% of total U.S. exports of this category of products). Chile, Brazil, and Costa Rica together accounted for 99% of these Latin American imports.

Potash

There are 8 active U.S. potash mines and 12 Canadian mines in operation (one using the new technology of solution mining). The 2.1 million tonnes of potash capacity in the United States is located mainly in New Mexico (5 mines) with 2 mines in Utah and 1 in California. Most of the more than 12 million tonnes of Canadian potash capacity is located in Saskatchewan (10 mines) with 2 other mines in New Brunswick having about 1.5 million tonnes of combined annual capacity. Figure 9 shows the location of these U.S. and Canadian potash mines.

Most of the U.S. potash capacity is controlled by seven producers as shown in Figure 10. Trans-Resources is the largest producer followed by AMAX and IMC-USA, all located in Carlsbad, New Mexico. In Canada, all of the potash production is in the hands of the seven producers shown in Figure 11. More than 70% of Canada's capacity is controlled by The Potash Corporation of Saskatchewan (PCS), IMC, and Kalium.

While none of the potash mines are ideally situated directly on deep water, essentially all major producers do export. The Saskatchewan mines export through the Port of Vancouver and to a lesser extent via the Mississippi River. The New Brunswick mines ship out of Belledune Point and St. John on the Atlantic. The U.S. producers export mostly through the Port of Houston, with some passing through southern California.

Of the some 5.8 million tonnes of potash (KCl) exported out of Canada (excluding exports to the United States) and the 815,000 tonnes exported out of the United States in fertilizer year 1988/89, 1.8 million tonnes was imported into Latin America (1,150,000 Canadian/650,000 U.S.). Brazil accounted for 62% of the U.S. exports, with Chile and Colombia accounting for 11% and 6%, respectively. Mexico and Venezuela each accounted for 5%. North American potash accounted for 48% of all of Latin America's potash imports in 1988.

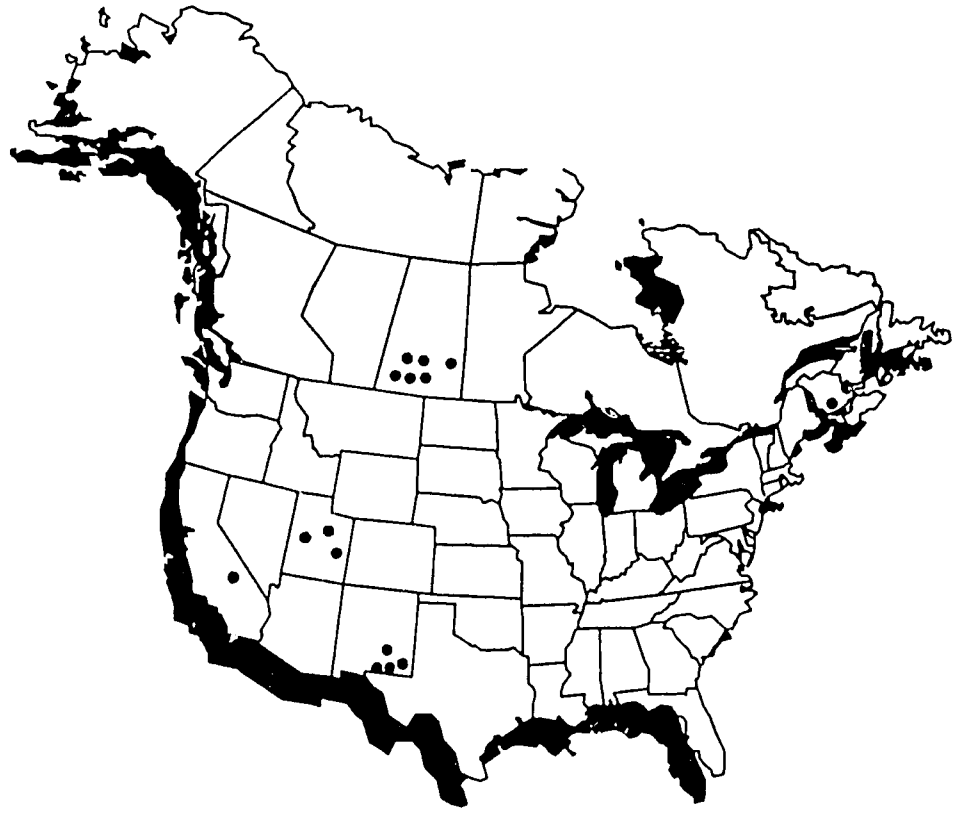

Figure 9. Location of Operating U.S. and Canadian Potash Mines – Capacity of 13.5 Million Metric Tons.

Figure 12 shows the history of U.S. and Canadian potash exports into Latin America. Included in these data is potassium sulfate from the United States which reached 187,000 tonnes in 1987/88 fertilizer year and then fell to 83,000 tonnes in 1988/89.

Latin America, in 1988/89 fertilizer year, imported 81,000 tonnes of "other potash fertilizers" from the United States (about 31% of total U.S. exports of this category of products). Costa Rica, Colombia, Brazil, and Mexico accounted for 82% of these Latin American imports.

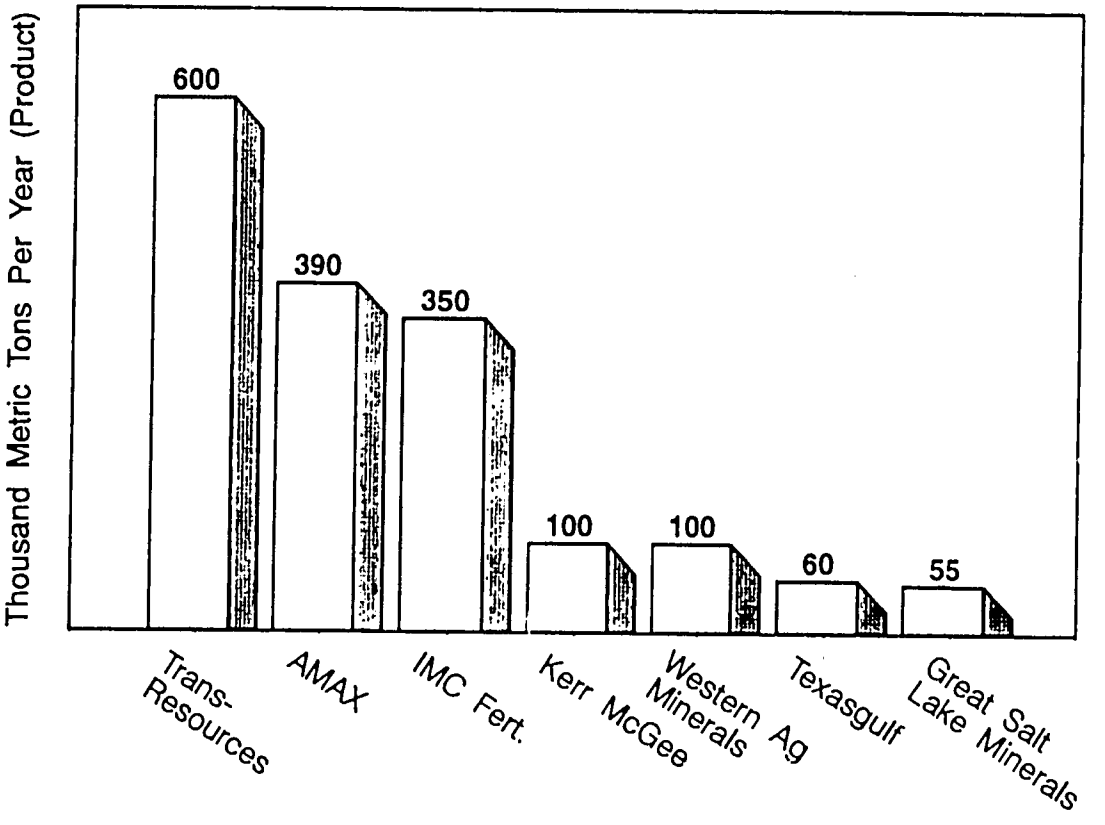

Figure 10. Potash Production Capability for Major U.S. Producers.

NPKs

U.S. exports of chemical mixes in 1988/89 fertilizer year totaled around 156,000 tonnes. Of this, Latin America imported 11,000 tonnes (or 7%). Honduras was the largest Latin American importer of U.S. NPKs in this period with a little more than 5,000 tonnes (42%). Mexico and the Bahamas accounted for 16% and 13%, respectively, and El Salvador and Panama each accounted for 9%.

Sulfur

While the United States is the largest producer of sulfur in all forms (18.5% of world production), it is also the largest single country consumer (21% of world consumption). Canada represents 11.5% of world production

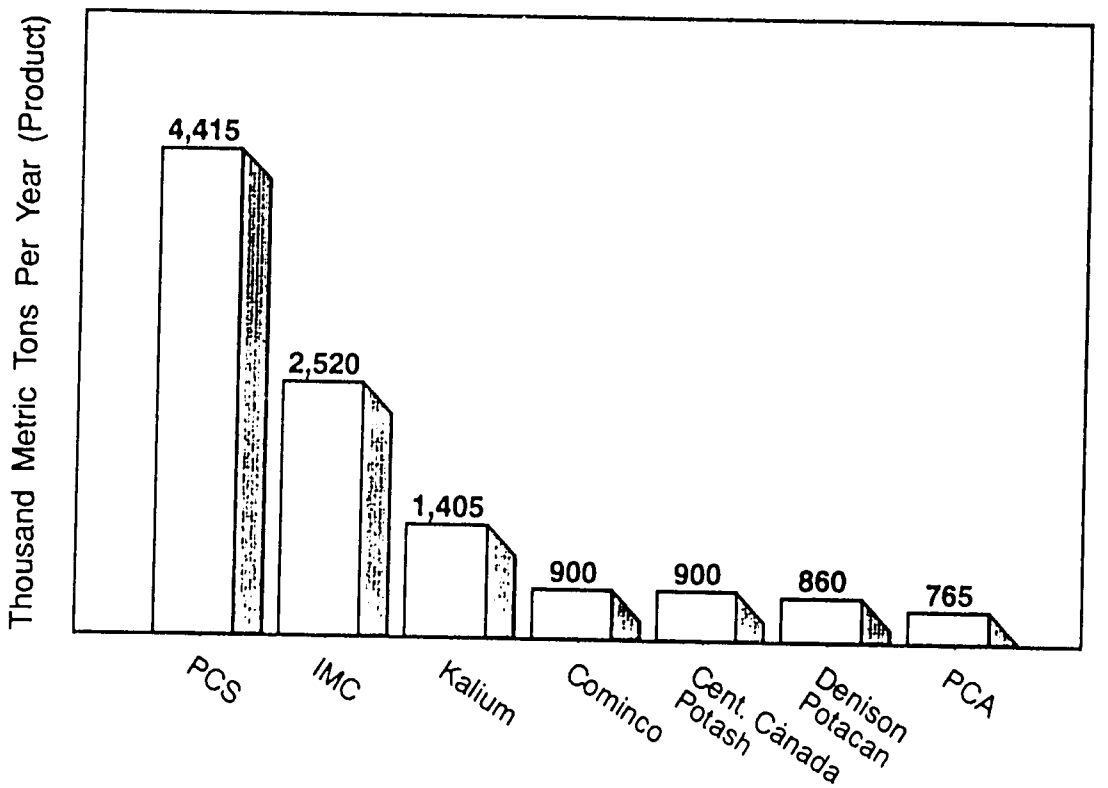

Figure 11. Potash Production Capability for Major Canadian Producers.

with little internal consumption. Where all of the Canadian production is by secondary recovery (from natural gas) and is virtually all in the form of elemental sulfur, U.S. production is 90% elemental sulfur from both Frasch and secondary recovery (from both oil and natural gas processes) and 10% is recovered as byproduct sulfuric acid. Canadian sulfur is mainly located in western Canada and is exported as a dry product through Vancouver. Most of the U.S. sulfur is exported out of the Gulf as liquid to large consumers. What little U.S. solid sulfur is exported is handled mostly out of Galveston, Texas.

Summary

Thus it is evident that North America is well situated to supply raw materials to Caribbean and Latin American bulk blenders and granulators. This is not only because of its production capabilities of the fertilizers

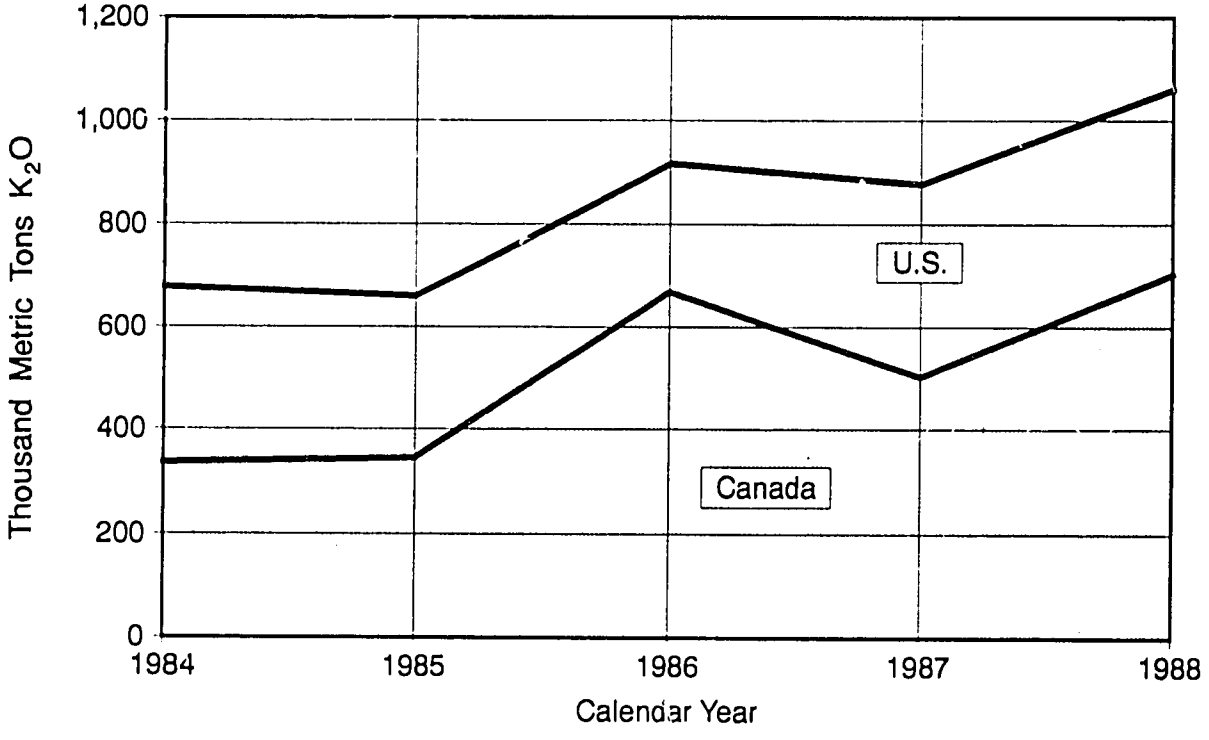

Figure 12. U.S. and Canadian Potash Exports to Latin America.

required by these producers, but also it is geographically well positioned – the U.S. Gulf Coast in particular.

In fertilizer year 1988/89, the United States exported nearly 3.5 million tonnes of fertilizers and fertilizer raw materials to Latin America. This was 15% of the total exports of such products from the United States; and 20% of Canada's potash exports for the same period was imported by Latin America.

Freight economics out of the U.S. Gulf Coast are favorable not only because of physical location but also because of a wide range of high-analysis products to choose from to take advantage of mixed cargo shipments. As for single-nutrient cargos of urea and potash, west coast Latin American customers can perhaps best be served from Alaska and west coast Canada, especially where larger, 10,000-tonne-plus vessels can be used. Single-nutrient granular urea and GTSP can be supplied out of the U.S. Gulf Coast

(and, of course, granular urea from Trinidad) as well as prilled urea and ammonium sulfate.

The U.S. Gulf Coast offers a larger number of supply points situated directly at or near to deep water ports all the way from Tampa to Houston. With much of the production being located at or near these ports, the cost of inland delivery to the port is minimal.

And, of course, the U.S. Gulf Coast region offers a great many of the products used by the Latin American and Caribbean blenders and granulators. Included in these are:

Urea (granular and prilled)
Ammonium Sulfate
Ammonium Nitrate
Sodium Nitrate
Anhydrous Ammonia
UAN
Aqua Ammonia
DAP
MAP
GTSP
SSP
Phosphoric Acid
Superphosphoric Acid
Phosphate Rock
Muriate of Potash
Sulfate of Potash
Sulfate of Potash/Magnesium
NPKs
Sulfur
Sulfuric Acid

In addition, other special products such as micronutrients and purified MAP and DAP are also available.

Tables 2 through 8 list the U.S. exports to Latin America by country for fertilizer years 1985/86 through 1988/89 as reported by the U.S. Department of Agriculture.

Table 2. U.S. Exports of Urea to Latin America

	1984/85	1985/86	1986/87	1987/88	1988/89
	(short tons)				
Guatemala	23,902	57,080	22,638	0	30,300
Belize	1,424	788	1,654	1,085	486
El Salvador	9,390	7,108	12,947	0	3,233
Honduras	11,820	7,213	18,663	2,901	8,956
Costa Rica	13,299	21,609	1,590	13,133	22,733
Panama	4,390	1,519	1,636	119	0
Bahamas	0	0	0	0	50
Jamaica	13	77	11	52	23
Cayman Islands	0	12	0	10	44
Haiti	5,422	0	0	0	0
Dominican Republic	22,209	3,288	0	0	0
Trinidad-Tobago	2,262	3,553	1,145	74	0
French West Indies	2,259	2,314	0	0	0
Colombia	31,006	63,709	24,904	36,897	34,515
Venezuela	87	43	40	0	0
Ecuador	27,926	37,824	19,825	0	14,865
Peru	452	104	128	232	16,697
Chile	102,016	76,428	146,003	180,713	156,360
Brazil	3,306	-	-	-	7,874
Uraguay	8,040	-	-	-	-
Argentina	1,838	20	1	2,267	163
Mexico	-	99	16,784	129	527
Total Latin America	271,061	282,788	267,969	237,612	296,826
Equivalent tonnes	245,972	256,613	243,166	215,619	269,352

Source: U.S. Department of Agriculture – Economics Research Service.

Table 3. U. S. Exports of Ammonium Sulfate to Latin America

	1984/85	1985/86	1986/87	1987/88	1988/89
	(short tons)				
Guatemala	27,676	53,549	55,561	39,271	5,689
Belize	0	0	0	0	282
El Salvador	152,966	97,416	90,362	38,421	108,354
Honduras	4,138	300	90	3,100	648
Costa Rica	5,072	2,835	8,646	3,245	8,502
Panama	275	0	7,838	0	2,511
Bahamas	0	0	0	0	1,734
Jamaica	339	2,712	319	3,004	122
Haiti	0	1,149	0	0	0
Dominican Republic	76,019	67,039	74,301	72,655	67,455
Trinidad-Tobago	0	0	0	37	1,742
French West Indies	19,391	8,571	0	0	0
Colombia	10,439	0	0	0	0
Venezuela	0	41	297	698	0
Guyana	0	0	0	11,709	16,785
Ecuador	2,316	3	55	3,100	5,723
Peru	9,025	25,897	40,015	11,585	11,903
Chile	107	218	0	0	0
Brazil	328,906	296,164	560,053	476,677	479,158
Uraguay	0	0	1,075	0	0
Argentina	0	13,976	12,028	14,620	6,372
Mexico	86	275	209	1,082	1,408
Total Latin America	636,755	570,145	850,849	679,204	718,388
Equivalent tonnes	577,818	517,373	772,095	616,338	651,895

Source: U.S. Department of Agriculture – Economics Research Service.

Table 4. U.S. Exports of DAP to Latin America

	1984/85	1985/86	1986/87	1987/88	1988/89
	(short tons)				
Guatemala	21,840	24,392	19,712	11,944	4,690
Belize	2,569	1,432	2,819	2,174	2,377
El Salvador	0	4,627	9,346	23,018	5,972
Honduras	4,251	5,098	0	4,784	12,014
Nicaragua	9,916	0	0	0	0
Costa Rica	24,974	14,746	29,678	30,239	21,369
Panama	6,423	3,700	11,249	5,325	5,323
Jamaica	0	2,688	0	0	26
Dominican Republic	46,695	30,772	45,566	32,544	43,616
French West Indies	5,781	0	1,387	1,322	0
Colombia	81,797	122,299	120,485	148,400	142,754
Venezuela	11,562	0	101,740	172,229	79,811
Ecuador	32,668	40,543	44,025	35,176	28,487
Peru	20,657	26,539	47,727	51,927	45,452
Chile	53,732	78,522	98,772	102,851	72,531
Brazil	85,398	61,317	191,780	90,575	42,182
Uraguay	48,760	33,398	41,648	41,808	39,617
Argentina	58,236	78,895	104,078	130,528	51,203
Mexico	343,860	91,802	65,088	6,218	14,859
Total Latin America	859,119	620,770	935,100	891,062	612,283
Equivalent tonnes	779,600	563,312	848,548	808,586	555,611

Source: U.S. Department of Agriculture – Economics Research Service.

Table 5. U.S. Exports of MAP to Latin America

	1984/85	1985/86	1986/87	1987/88	1988/89
	(short tons)				
Guatemala	0	0	9,316	15,980	26,290
Belize	0	0	0	0	130
El Salvador	0	0	15,131	15,423	8,583
Honduras	0	0	38	980	616
Costa Rica	0	56	119	536	694
Panama	0	0	0	13	22
Bermuda	0	0	0	26	0
Bahamas	0	0	0	86	6
Jamaica	0	0	0	584	20
Cayman Island	0	0	0	0	30
Turks & Caicos Islands	0	0	0	2	0
Haiti	483	665	0	0	0
Dominican Republic	18	8	2,998	139	1,283
Leeward-Windward Islands	41	45	19	0	40
Trinidad-Tobago	3	0	0	97	0
French West Indies	0	5	0	0	0
Colombia	72,649	33,610	30,140	41,193	59,274
Venezuela	0	0	0	0	28,952
Ecuador	7,273	0	0	0	3,434
Chile	0	0	0	0	6,886
Brazil	0	0	30,914	35,078	43,751
Uraguay	0	0	0	0	9,738
Argentina	3,141	550	0	0	6,833
Mexico	0	0	0	1,243	402
Total Latin America	83,608	34,939	88,675	111,380	196,984
Equivalent tonnes	75,869	31,705	80,467	101,071	178,751

Source: U.S. Department of Agriculture – Economics Research Service.

Table 6. U.S. Exports of TSP to Latin America

	1984/85	1985/86	1986/87	1987/88	1988/89
	(short tons)				
Guatemala	9,430	6,135	3,305	2,840	0
Belize	1,085	2,445	2,168	79	177
El Salvador	289	704	0	0	0
Honduras	378	952	50	73	99
Costa Rica	7,148	8,720	11,003	6,628	8,753
Panama	0	1,718	1,321	0	0
Bermuda	0	0	0	0	0
Bahamas	246	45	66	18	0
Jamaica	83	609	0	0	0
Turks & Caicos Islands	0	0	0	0	0
Cayman Island	0	0	0	0	0
Haiti	1,090	0	0	0	0
Dominican Republic	20,092	23,806	14,095	9,936	9,627
Barbados	77	143	0	0	0
Leeward-Windward Islands	0	0	0	0	0
Trinidad-Tobago	110	0	0	0	0
French West Indies	0	0	0	0	0
Colombia	13,054	18,181	20,494	19,395	6,904
Venezuela	2,710	0	0	1,652	0
Guyana	832	556	6,171	5,045	1,996
Ecuador	2,259	9,047	4,608	99	1,976
Peru	19,203	17,230	27,834	31,716	9,239
Chile	146,849	136,127	201,299	234,100	118,227
Brazil	41,497	60,617	170,792	170,794	58,839
Uraguay	2,949	13,527	23,831	8,109	0
Argentina	58,236	78,895	104,078	130,528	51,203
Mexico	0	269,002	26,396	0	0
Total Latin America	327,617	648,459	617,511	621,012	267,040
Equivalent tonnes	297,293	588,438	560,355	563,532	242,323

Source: U.S. Department of Agriculture – Economics Research Service.

Table 7. U.S. Exports of Potash (KCl) to Latin America

	1984/85	1985/86	1986/87	1987/88	1988/89
	(short tons)				
Guatemala	22	15	0	0	5,205
Belize	694	797	1,383	2,862	2,586
El Salvador	0	3,274	9,049	16,808	2,838
Honduras	0	1,703	4,681	3,830	2,670
Costa Rica	9,234	8,310	6,515	26,270	18,430
Panama	1,599	3,309	2,860	3,995	3,241
Bahamas	0	0	15	0	0
Jamaica	0	130	0	19	1
Haiti	0	1,079	0	0	0
Dominican Republic	23,532	18,156	33,803	34,736	39,265
Barbados	50	0	0	0	0
Leeward-Windward Islands	1,708	0	0	0	0
Trinidad-Tobago	0	0	0	110	3,333
French West Indies	0	5,787	8,784	4,409	4,960
Colombia	0	17,770	23,008	9,679	57,264
Venezuela	4,629	165	0	0	10,941
Guyana	0	0	0	3,871	882
Ecuador	14,647	15,078	12,386	17,008	5,913
Peru	26,330	7,087	20,451	13,946	0
Chile	0	2,783	0	6,660	5,511
Brazil	367,901	189,795	190,894	289,474	259,134
Uraguay	0	1,399	0	0	0
Argentina	2,314	5,874	4,489	50	406
Mexico	80,671	51,109	63,688	12,381	13,333
Total Latin America	533,331	333,620	382,006	446,108	435,913
Equivalent tonnes	483,966	303,290	347,278	405,553	395,565

Source: U.S. Department of Agriculture – Economics Research Service.

Table 8. U.S. Exports of Sulfate of Potash (K_2SO_4) to Latin America

	1984/85	1985/86	1986/87	1987/88	1988/89
	(short tons)				
Guatemala	0	3,306	0	0	44
El Salvador	0	0	0	12,069	44
Honduras	0	0	883	0	44
Costa Rica	2,865	2,303	3,306	3,618	3,761
Panama	0	0	771	0	220
Bahamas	0	0	0	0	25
Dominican Republic	1,873	1,288	644	551	1,625
Colombia	0	4,933	8,539	53,337	23,818
Venezuela	0	0	0	22,089	0
Guyana	0	0	0	220	0
Ecuador	0	620	2,425	99	3,503
Peru	13	6,365	6,443	9,259	3,472
Chile	7,947	23,645	38,062	28,423	31,633
Brazil	0	4,391	28,676	22,277	7,173
Argentina	0	5,225	1,591	6,229	0
Mexico	24,078	35,979	1,294	29,273	8,182
Total Latin America	36,776	88,055	92,634	187,444	83,544
Equivalent tonnes	33,372	79,905	84,060	170,094	75,811

Source: U.S. Department of Agriculture – Economics Research Service.

Development of Compaction and Bulk Blending in Guatemala

C. M. Rodriguez, Consultant - Guatemala[1]

Abstract

Although the NPK fertilizer industry throughout most of the world is still strongly associated with wet granulation processes, other alternatives such as bulk blending and compaction/granulation are now being considered as practical solutions to the fertilizer production problems of developing countries. The DISAGRO group has proven that bulk blends and compacted products can meet the fertilizer needs of the widely diversified agricultural sector of Guatemala. The production plants and marketing plans used by the group have become a showcase for other countries to study and have shown that their success could be accomplished in other countries.

This paper concentrates on the development of the compaction/granulation industry in Guatemala and focuses on the advantages and disadvantages of the process.

Introduction

When I think of the fertilizer market in Guatemala, definitely bulk blends come to my mind because this type of fertilizer has made such an impact on all the agricultural sectors, helping farmers increase their yields and profits. Nevertheless, when I think of the fertilizer industry in Guatemala, compaction comes to my mind because it has revolutionized the fertilizer production in the country and it has also pioneered, at an international level, an NPK production alternative for developing countries.

Because of the simplicity of bulk blending, I would not emphasize it as an industrial process that deserves too much attention or discussion. Nevertheless, it is the flexibility of the process that I value which characterizes it as an agronomic solution for the production of formulas based on the individual crop requirements and characteristics and deficiencies of the various soils. This is of particular importance for a country such as

1. Prior to October 1989, Mr. Rodriguez was General Manager of Fertilizantes Quimicos de Guatemala (FERQUIGUA) - Guatemala City, Guatemala. FERQUIGUA is part of the DISAGRO group of companies.

Guatemala where a wide variety of crops are grown at altitudes from sea level to 10,000 feet above sea level on different soils, loose and heavy, acid and alkaline, with rainfall ranging from desert-like to tropical.

I will not devote too much of this presentation to bulk blending since we have at this workshop several respectable bulk blenders who will document the benefits and advantages of this simple blending process. Tomorrow Mr. Mark A. Swisher of the DISAGRO group will discuss the characteristics of the different soils and crops of Guatemala. He will describe the group's successful blending installations, and he will cover the publicity and extension efforts used for the marketing of bulk blends. I know that after his presentation and Thursday's field trip there will be no doubts about the potential of this NPK production method and the success it has had in this country.

I will try to summarize today why the DISAGRO group decided to install a compaction plant, and I will focus on the advantages and disadvantages of the process. I will not discuss in detail the equipment at the plant since I feel that this can be done more effectively during the field trip later this week.

Background

The fertilizer market in Guatemala has almost reached 400,000 tonnes of product per year. Of that total amount more than 50% is composed of straight nitrogen products like urea and ammonium sulfate. The rest of the market is composed of NP and NPK fertilizers manufactured in Guatemala by bulk blending or compaction and granular fertilizers imported from Europe. The imported products are manufactured by wet (slurry)-type granulation processes. There is also a considerable amount of raw materials used for straight application.

Bulk blends were introduced in Guatemala by the DISAGRO group at the end of the 1970s with a good acceptance from the progressive farmer who found the flexibility of this NPK production method ideal for making formulas based on crop requirements and specific soil deficiencies. This product acceptance and loyalty has been increasing year after year, thanks to the marketing efforts from the group of agronomists. Nevertheless, another segment of the market has never accepted blends, preferring the uniform colored homogeneous NPKs from Europe manufactured by various wet-granulation processes.

After recognizing this, the DISAGRO group started evaluating in 1985 the feasibility of constructing a plant to manufacture a one-color homogeneous fertilizer to penetrate the market not accessible with bulk

blends. None of the wet-granulation processes were seriously considered because of the large investment required and because we saw a trend all over the world for the industry to move away from this production method.

The compaction process was considered on the basis of the following considerations: (1) low investment cost, (2) low final cost utilizing standard raw materials and local fillers, (3) simple process, and (4) low operation cost.

After a complete evaluation, compaction was chosen over the traditional wet-granulation process. Several plants were visited in Canada, United States, France, and Germany. Although these plants were compacting potash, specialty-type garden fertilizers, or PKs, they proved to be very enlightening in our design of the plant. The three major manufacturers of compaction machines (roller presses) were contacted and much was learned from them. Once the decision to go ahead with the project was taken, a set (two) of compactors was ordered from the KOPPERN company of West Germany. The Sackett company of Baltimore, Maryland, was chosen to complete the plant layout and to supply the blending and material handling equipment.

The Plant

The plant of Fertilizantes Quimicos de Guatemala (FERQUIGUA) is located in Teculutan, 125 km northeast of Guatemala City. The raw materials for this plant are imported through the Port of Santo Tomas de Castilla on the Atlantic Ocean some 200 km east of the plant. The building that houses the production facilities was built with prestressed and post-tensioned concrete. Cement sheeting was used for the roof and siding. The area under roof is 8,000 m^2, providing storage for more than 25,000 tonnes of raw materials in bulk and 5,000 tonnes of bagged products. The plant was laid out to incorporate room for a future expansion of the compaction system – a second train of equipment identical to the existing plant. The cost for all the civil work including the warehouse was estimated at US $1 million.

The total cost for the two compactors, blending tower (raw material feed system), material handling equipment, mills, screens, and bagging equipment added up to US $1.8 million. I must clarify that because of the new exchange rate of the U.S. dollar with the Deutche Mark and an increase in price in most of the equipment; today the same equipment would cost around US $2.5 million.

The plant was constructed during 1986 and the first quarter of 1987, a total of 15 months. During the first season the plant produced around 25,000 tonnes and then shut down for the last 2 months of the year for the annual corrective and preventive maintenance program as well as for some

corrective design of the dedusting system and other miscellaneous equipment. During 1988 and this year (1989), annual production has exceeded 50,000 tonnes of bagged NP and NPK fertilizers and granular raw materials used for bulk blending. The market for the bagged finished product has been mainly in Guatemala although the plant is also exporting some materials to Honduras. The granular raw materials are produced for the two sister companies involved in bulk blending here in Guatemala, FERTILASA and DISFERSA, as well as for a blender in Costa Rica.

As the fertilizer market in Guatemala continues to grow and with the increased production of granular raw materials for blending, FERQUIGUA could be in the position to expand its production capacity by 1991.

The flowsheet of the plant (Figure 1) starts with a bulk conditioner (1) fed by a front loader. All the raw materials are then transferred by elevators to six storage bins at the top of the blending tower (2). A computer prepares the individual batches, feeding the product into a weigh hopper (3) and then into a 4-tonne rotary blender (4). A second elevator raises the product to a double-row cage mill (5) which grinds the product to a minus 60-plus 100-mesh particle size and discharges it into a primary hopper. The recycle product and the primary feed are then mixed in a double-shaft pug mill (6) where liquids are sometimes added. The material mixture is then passed through magnetic humps and then split into two streams to feed the two compaction lines. Drag chain conveyors regulate the flow into the compactors, thereby ensuring a constant and uniform feed. The compactors (7) convert the fine feed into approximately ½-inch thick flakes ranging from 2 to 10 inches in size which are then transported on a conveyor belt to elevators feeding two double-deck screens (8). The oversize material separated by the screens is then passed through slow-moving chain mills (9). All the undersize material is collected and transported to the recycle hopper with a drag chain conveyor. The finished product is sent via another belt conveyor to the bagging or bulk storage hoppers. Table 1 gives the material particle-size distribution at different locations during the process.

A dedusting system (10) with a fan and four cyclones is located in the middle of the plant. All the dust collected is returned to the process through the recycle chain conveyor. The dedusting system has been simplified and modified to prevent operating problems and reduce required maintenance. Currently we have reduced the number of locations where dust is collected, concentrating on the areas that deal with the finished product. Because of the nature of the production, the dedusting system is now used not only as a means to reduce the dust emissions in the plant, but also as a quality control

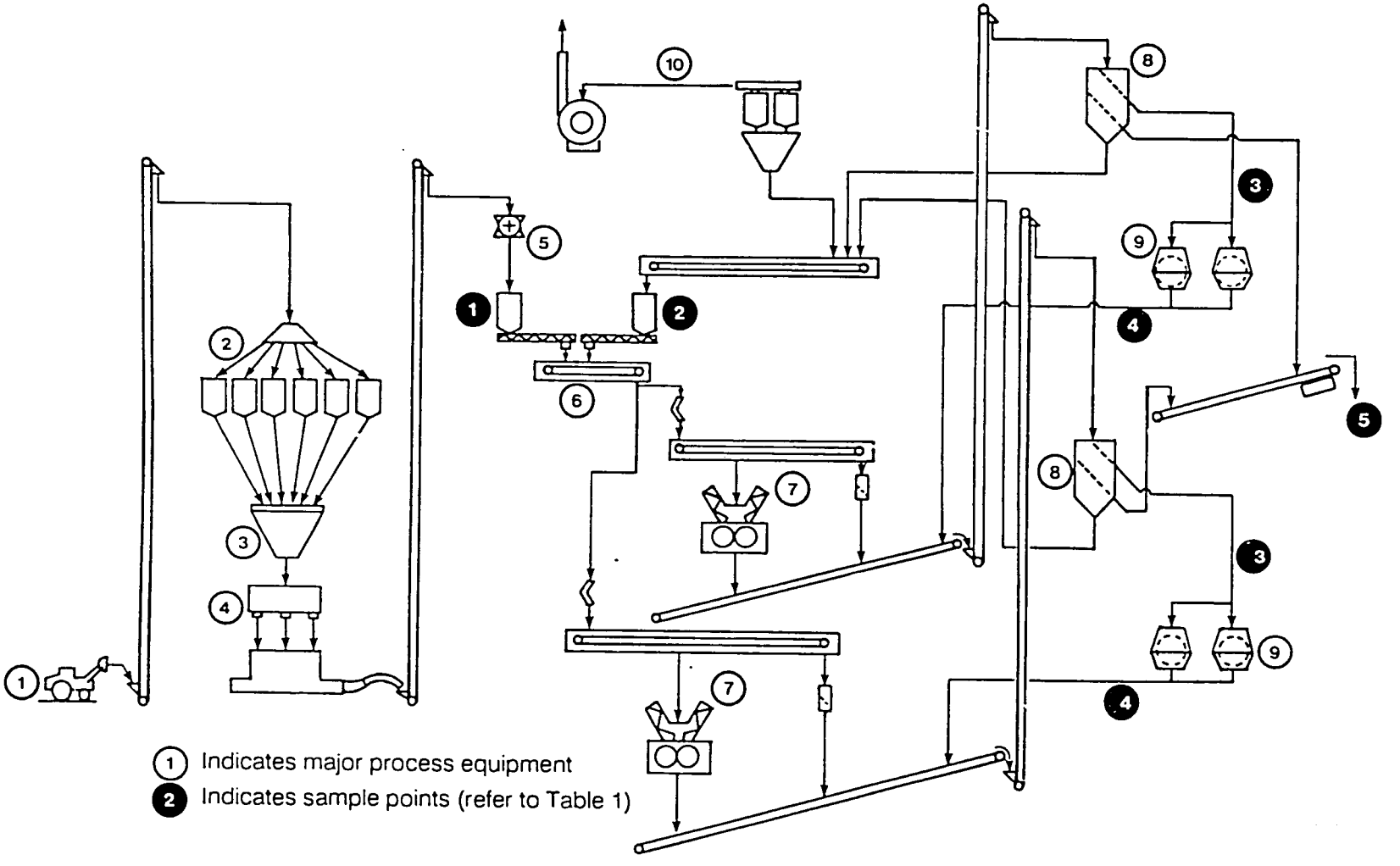

Figure 1. Flowsheet of the FERQUIGUA Fertilizer Compaction/Granulation Plant.

Table 1. Typical Screen Analysis of Materials at Various Points in FERQUIGUA Compaction Plant

Primary Feed Hopper Below Cage Mill (Point 1)			Recycle Feed Hopper (Point 2)			Entering Chain Mill (Point 3)			Leaving Chain Mill (Point 4)			Finished Product (Point 5)		
Mesh	Retained	Accumulated	Mesh	Retained	Accumulated	Mesh	Retained	Accumulated	Mesh	Retained	Accumulated	Mesh	Retained	Accumulated
6	0	0	6	1.07	1.07	¼-in	74.57	74.57	¼-in	25.75	25.75	6	0.41	0.41
10	0.15	0.15	10	10.11	11.18	4	7.16	81.73	4	9.94	35.69	8	16.94	17.35
14	0.55	0.70	12	6.12	17.30	6	13.38	95.11	6	22.71	58.40	10	67.94	85.29
16	0.60	1.30	14	11.63	28.93	10	3.88	98.99	10	17.94	76.34	12	8.61	93.90
18	1.06	2.36	16	3.72	32.65	12	0.38	99.37	12	5.88	82.22	14	3.38	97.28
20	1.66	4.02	18	13.01	45.66	14	0.30	99.67	14	12.75	94.97	16	1.33	98.61
30	1.91	5.93	20	9.56	55.22	16	0.11	99.78	16	1.51	96.48	18	0.93	99.54
45	13.67	19.60	30	10.30	65.52	18	0.22	100.00	18	3.09	99.57	20	0.46	100.00
60	34.17	53.77	45	23.49	89.01				20	0.43	100.00			
80	25.18	78.95	80	9.32	98.33									
100	13.67	92.62	100	0.37	98.70									

measure to reduce the temperature of the finished product and remove fine particles left after screening.

Advantages of the Compaction Process

Low Investment Cost/Simple Process

The cost of a compaction plant is substantially lower than any wet granulation plant. Only the simple steam granulation process used in India and the Philippines has a comparable cost. On the other end of the scale, a compaction plant costs almost US $2 million more than a bulk-blending plant, nevertheless, with the reduction of cost in the fine and standard (nongranular) raw materials used, the return on investment of a compaction plant could justify the additional investment. The other advantage of the compaction process is the simplicity of the equipment and the process, making the operation and maintenance very straightforward.

Raw Materials

In the production process FERQUIGUA uses the following raw materials: prilled urea, standard ammonium sulfate (AS), fine mono-ammonium phosphate (MAP), powdered high reactivity phosphate rock, standard muriate of potash (MOP), kieserite fines, boron fines, zinc oxide fines, and ground calcium sulfate (gypsum) from local mines. All these raw materials are also bagged and sold to farmers for straight application.

Having three sources of nitrogen (urea, AS, and MAP), two sources of phosphate (MAP and phosphate rock), and a filler (gypsum) allows great flexibility in modifying formulations to incorporate economic factors based on the price of the raw materials and agronomic factors based on soil analyses and crop peculiarities. For example, a formula for a perennial, such as coffee grown on an acid soil, could use the economical, slow-release phosphate rock as the main source of P_2O_5 and urea, the most economical source of nitrogen.

Although powdered MAP is the best material to compact and improve the physical compaction properties of any formulation, there are economic benefits in using a high reactivity phosphate rock as an alternative source of P_2O_5. Guatemala grows some of its most important cash crops (coffee, sugarcane, rubber, and cardamon) on acid soils having a high phosphorus fixation capacity due to the large concentrations of aluminum, manganese, and iron. The high reactivity phosphate rock, like the one imported from North Carolina, offers the farmer a slow-release source of P_2O_5 with less danger of fixation and at a more competitive cost. In most formulations we include a combination of MAP and phosphate rock which offers a quick water-soluble

source and a slow-release source of phosphate. This is comparable to some imported granular NPKs where the P_2O_5 source is only partially acidulated.

Flexibility

Although the plant was originally planned for the production of continuous long runs of the three traditional formulas (15-15-15, 20-20-0, and 16-20-0) for the traditional farmer, the FERQUIGUA plant has now produced more than 25 different grades. Changing grades is not the headache we expected–after stopping the primary feed, all the recycled material can be compacted in a very short time. This flexibility allows for a change in formulation in less than 20 minutes. Small runs of even 10 tonnes can be accomplished to meet a client's order. Production of four or five different formulas in one day is common at the plant, thus minimizing the need for maintaining inventories of a wide selection of formulas.

The only limitation in the formulations has been the urea content. The maximum amount used with success has been around 30% which combined with the other sources of nitrogen translates into a nitrogen content in the formula of around 21%. Most traditional formulas used in Guatemala have lower N values but a lot of the new NK bulk-blended formulas used in coffee or in second applications on other crops do have a higher N content. There is no limitation in the amount of phosphate and potash used in the formulations since the compaction of MAP and MOP has been accomplished with very good results. This point brings us to the next advantage of compaction.

Compacted Raw Materials for Bulk Blending

For the DISAGRO group perhaps the most important advantage of the compaction installation has been the capability to produce first class granular compounds for use in their blending operations. This has allowed for substantial reductions in cost by importing powder and fine products instead of more expensive granular raw materials.

Although most granular raw materials are traded at a premium of only US $10/tonne above their nongranular counterparts, some specialty products such as boron and ammonium sulfate have a much higher price difference. Granular boron compounds are usually some US $150/tonne more expensive than fine equivalents, so now FERQUIGUA imports boron fines to produce a compacted granular material for the bulk-blending plants in Guatemala and even in Costa Rica where an additional trucking cost of US $65/tonne is incurred. I want to point out that compacted boron is one of the materials produced with the best physical characteristics, showing a very uniform granule and a higher hardness than most other granular products.

In the case of magnesium sulfate, a blend with MOP and MAP has been designed to improve the quality of the compacted product and to

ensure good abrasion resistance required for bulk transportation and blending.

The most important development of compacted raw materials is the grade 4-29-0. This is a combination of MAP fines, high-reactivity phosphate rock, and calcium sulfate. From the agronomic point of view, this material combines a quick (100%) water-soluble source of P_2O_5 with a slow-release source thus providing enough phosphorus for the crop's immediate requirement but also ensuring the long-term availability of phosphorus in volcanic soils with a high phosphorus-fixation capacity. From the economic point of view, this raw material allows for a more competitive source of P_2O_5 for the bulk blends to compete with the imported NPKs from Europe which also do not have 100% of the P_2O_5 in a water-soluble form.

Please keep in mind that in Guatemala, contrary to many other countries, no fillers like limestone or sand are used in the formulation of bulk blends. The 4-29-0 grade with only 33 units of nutrients and other grades like 14-29-0 help in the formulation of low nutrient blends like 16-20-0 which normally require granular raw materials with high costs per unit of nutrient such as triple superphosphate and ammonium sulfate. The compacted compounds enable the use of more cost-effective materials like urea, MAP, and DAP.

Operation Cost

Excluding the depreciation of the machinery, the cost of operating a compaction plant is not much higher than that of a bulk-blending plant. One of our biggest surprises was the low electricity consumption in the neighborhood of 13 kWh/tonne of finished product. With the large electric motors in the compactors our initial estimates were almost four times as high as the observed value. It is believed that because of the low pressures required to compact urea-based NPKs, the electricity demand is substantially lower than the design estimates.

The most demanding need for labor is in the area of maintenance and cleaning. We fortunately chose concrete for the warehouse structural elements and it has proved to be an economical building system and a maintenance-free construction material. All the floors, stairs, and hand rails are made of wood. This represents savings in the original cost and requires no maintenance. Nevertheless, all the equipment is supported on an extensive system of structural steel which requires, together with the equipment itself, a lot of maintenance.

Unlike a bulk-blending plant where cleanliness is not a problem because of the dust-free granular materials, a urea-based compaction plant presents a considerable maintenance problem. Once the blend is ground down to minus 60-mesh in the double-row cage mill, the hygroscopic nature

of the urea converts the material into a troublesome product. The original dedusting system, including ducts, cyclones, and air locks, had to be redesigned because the dust collected rapidly and absorbed considerable amounts of moisture from the air; this clogged the system. Although the plant site at Teculutan is located in a region of low relative humidity, during the rainy season the humidity reaches more than 90% in the early hours of the morning and this complicates the maintenance operation. Nevertheless, visitors from the fertilizer industry always comment on the cleanliness of the plant.

I recommend that the space distribution of a compaction plant be carefully planned. The air volume in the production area should be minimized to enable the implementation of economical ventilation and dehumidifying systems.

Market Acceptability

Going back to the finished NPK products, I have found that the most common doubt about this production method is the market acceptability of the product. It is obvious to the farmers that the particles are not identical to the spheres produced by wet granulation that they are used to seeing. The appearance of the compacted product initially produced by FERQUIGUA showed that it was made up of small granules including a high percentage of 16-mesh particles. During the last season the screens were changed to produce larger particles (70% greater than 10-mesh) with only 2% passing a 16-mesh screen. This modification helped to ensure better acceptability of the product.

We all know that the agricultural sector in any country is very conservative and does not like to accept changes in practices, especially changes in the physical appearance of the fertilizer or even the bag. Nevertheless, DISAGRO has managed to maintain a strong market position with bulk blends and compacted fertilizers by using marketing strategies based on agronomic facts. The ultimate goal has been to educate the farmers since we knew that any farmer who understands the necessity of a soil analysis, the importance of the different nutrient requirements of the crops, and the benefits of the different raw materials will take advantage of the flexibility of bulk blends and compacted fertilizer in designing a well-balanced fertilizer program. With the use of an extension agronomist and test plots, every day more farmers are beginning to use more flexible formulas instead of the traditional but not necessarily optimum 16-20-0 and 15-15-15 formulas.

Conclusion

Bulk blending and compaction have allowed the DISAGRO group to supply the Guatemalan farming sectors with a wide selection of formulas at a competitive cost to meet their agricultural needs and personal preferences. I believe that for many developing countries these two NPK production methods could represent a feasible solution to their fertilizer needs. Several companies represented at this workshop are currently taking a close look at these production alternatives and I hope that the workshop proves useful in answering some of their questions.

Bibliography

1. Rodriguez, C. 1989. "Producción de NPK's y Otros Fertilizantes por el Método de Compactación, una Solución Viable para Países en Desarrollo," ADIFAL, Volume XII, No. 32, 24-30.
2. Rodriguez, C. 1989. "Production of NPK's and Other Fertilizers by the Method of Compaction, a Viable Solution for Developing Countries," Fertilizer Latin America, International Conference Organized by British Sulphur, Caracas, Venezuela, 449-458.
3. Rodriguez, C. 1988. "Compaction of NPK's on Guatemala," Proc. International Workshop, NPK Fertilizer Production Alternatives, Madras/Bombay, India, 59-63.
4. Pietsh, W., and C. Rodriguez. 1987. "Granulation of Fertilizers by Compaction," Proc. 20th Biennial Conference of the Institute of Briquetting and Agglomeration, Orlando, Florida, 113-126.
5. Schultz, J. J. 1988. "Comparative Advantages and Disadvantages of Blended and Granulated NPK Fertilizer," Proc. International Workshop, NPK Fertilizer Production Alternatives, Madras/Bombay, India, 67-71.
6. Chien, S. H., L. A. León, and H. R. Tejeda. 1980. "Dissolution of North Carolina Phosphate Rock in Acid Colombian Soils as Related to Soil Properties," International Fertilizer Development Center, Muscle Shoals, Alabama.
7. Fenster, W. E., and L. A. León. 1979. "Utilization of Phosphate Rock in Tropical Soils of Latin America," International Fertilizer Development Center, Muscle Shoals, Alabama 35662.

Selling Bulk-Blend Concept in Guatemala

Mark A. Swisher, Plant Manager, Fertilizantes Quimicos de Guatemala (FERQUIGUA) - Guatemala

Introduction

Bulk-blending plants exist in many Latin American countries and, of course, the practice is the standard in the United States and Canada. Our plants have been in business for 10 years; however, we have been frustrated by the way local farmers have used our plant. So 3 years ago the sales force of our company energetically set about to change fertilizer use in Guatemala.

Bulk blenders exist theoretically for two reasons: first, it is usually cheaper to blend a product than to granulate it; and, second, bulk blending is much more flexible than granulation in that many formulas and raw materials can be used. I believe, however, that the main reason bulk blenders succeed in marketing is that they are normally closer to the farmer and therefore they are usually well known to the farmer (they are normally small local operations). They are also much more flexible in dealing with the farmers in a production sense, and many times they are more flexible financially than larger companies. We wanted to use the example of the United States, taking the good features of bulk blending and applying them to Guatemala.

A Brief History

A brief history of fertilizers in Guatemala starts with NPK granular products being imported from the United States (Olin Matheson, Mississippi Chemical, Royster, and others) and Western Europe (BASF, Norsk Hydro, UKF, DSM, and more). Esso Chemicals built several small production facilities throughout Central America including Guatemala, Nicaragua, El Salvador, and Costa Rica. These plants imported sulfuric acid, phosphoric acid, potash, and other materials to produce granular NPK products; imports, however, continued to retain a significant share of the market. These Esso plants were bought by the Mexican Government and given the FERTICA name. Using mainly Mexican raw materials they produced NPK formulas on and off until political, financial, and production problems forced the plants to be closed. FERTICA's sales organization in Guatemala went out of business about the same time as our group (FERQUIGUA) started operations. After 10 years our plants (including three bulk-blending facilities, one compaction-granulation factory, and one port bulk-bagging warehouse) obtained

50%-65% of the total Guatemalan market. Granular NPKs, urea, and ammonium sulfate imported from Western and now Eastern Europe currently compete with us.

Our main focus for 7 years was on constructing production facilities and warehouse space to cover the whole Guatemalan market. After studying our sales records at the end of our construction phase, we were frustrated that our sales were still dominated by the formulas left to us by the NPK importers and FERTICA, namely 15-15-15, 16-20-0, and 20-20-0, plus a supposed coffee formula like 18-6-12-4-0.6 Mg.

Agronomically speaking, these formulas no longer functioned well. Indeed they have contributed to some serious soil problems, and upon talking to farmers, we found a lot of dissatisfaction with fertilizer in general. Some companies swore by our products, others swore against our products, and still others one year bought from one importer, the next year from us, and maybe the next year from yet another importer. Three years ago our happiest clients were tobacco farmers, who using guidance from U.S. companies applied ammonium nitrate, DAP, potassium sulfate, and potassium nitrate; melon exporters who used TSP and micronutrients plus other raw materials; and some enlightened coffee farmers, who also used micronutrients and extra applications of potassium chloride to raise the yield and quality of their crops.

By design our company had in place the elements needed to ensure success in this program. These elements were good equipment, quality granular raw materials, and independent soil laboratories capable of providing prompt and reliable soil and leaf analysis.

Table 1 shows the raw materials used in the program. Some numbers bear special attention. Use of micronutrients as a whole has increased from 30 to 400 tonnes; use of soil amendments such as dolomitic limestone and gypsum has increased from 900 to 10,000 tonnes; use of nonchloride potassium went up 25%; use of all potassium products went up 40%; and use of calcium ammonium nitrate doubled. Phosphate rock was not imported in 1987, but we will use 8,000 tonnes in 1989. Our fertilizer sales have increased 33% in these 3 years, and most of that increase has been from nontraditional sources.

The main features of our program are soil analysis, leaf analysis, field trials, raw material flexibility, use of good granular products, employment of enlightened field agronomists, establishment of good public relations, and a small advertising campaign.

Table 1. Raw Material Use in Guatemala, 1987-89

	1987	1988	1989
	(tonnes)		
Granular urea	12,000	13,500	15,000
Prilled urea	52,500	49,000	55,000
Standard ammonium sulfate	25,000	30,000	40,000
Granular ammonium sulfate	11,000	12,000	15,000
Calcium ammonium nitrate (CAN)	2,625	4,200	5,000
Diammonium phosphate (DAP)	14,500	7,700	6,000
Monoammonium phosphate (MAP)	7,000	19,000	20,000
Triple superphosphate (TSP)	3,000	3,000	3,100
Phosphate rock	-	5,700	8,000
Granular muriate of potash	7,200	6,400	8,000
Standard muriate of potash	8,300	13,000	16,000
Potassium sulfate	1,400	1,400	2,000
Potassium nitrate	1,700	1,300	1,600
Magnesium sulfate	3,000	2,500	1,700
Boron	350	1,000	1,000
Zinc	5	40	300
Other micronutrients	25	50	100
Limestone	929	2,8[illegible]5	5,331
Gypsum	-	3,556	4,868
TOTAL	150,534	177,201	207,999

Soil Laboratory

Without a modern, efficient soil laboratory, it would be impossible to carry out this program successfully. When I joined the Peace Corps in 1972, the first soil laboratory in Guatemala was being installed with the help of USAID. Since then, to the best of my knowledge, no new investments nor maintenance have occurred. Fertilizer use recommendations are made on the basis of traditional products. No micronutrients nor amendments are being prescribed, therefore, the farmer has lost confidence in these recommendations. In the last 4 years U.S. soil laboratories have offered cheap, quick analyses to Guatemalan farmers, and a new soil laboratory now exists in Guatemala which is capable of giving a complete report on soils, including all elements, cation exchange capacity, pH, organic matter, interchangeable

acid content, electrical conductivity, and other determinations. This local soil laboratory also offers leaf analysis.

The synergistic effect of having a bulk blender and a soil laboratory is obvious. Without a soil laboratory it would be very difficult for us to sell an integral soil fertility program. Without a bulk blender that can use many different raw materials (we have more than 25), it would be useless for the farmer to obtain a soil analysis; he would have only a limited source of fertilizer supply.

If we just stop a moment and consider the area served by our plants–basically one-fourth of the country–we will find that its area is 15,000 square miles, the size of Connecticut. Fifty miles to the east of Guatemala City starts the biggest banana plantations in the country. In a radius of 40 miles of the plant, we find the biggest irrigation districts where the soils are planted in tobacco, melons, okra, tomatoes, cucumbers, bell peppers, broccoli, and onions. The largest upland rice plantation also falls in our plant service area. Coffee can be found within 100 miles; broccoli, cauliflower, and brussel sprouts are planted within 75 miles. The elevation ranges from sea level to 7,000 feet. The rainfall varies from 10 inches to 300 inches per year. The pH of the soil changes from 4.5 on the coast to 8.0 in the irrigation districts then back to 4.5 again in the coffee-growing areas.

Giving each of these areas the same fertilizers–the same raw materials–year after year is an injustice to the intelligence of these farmers. Failure to use technical facilities available results in maintaining low yields and a low quality of agricultural products. Selling fertilizers on the basis of appearance only is also an insult to the farmer. In many cases it ensures continuance of poor yields and bad quality.

What are the tangible results of using the soil laboratory? Some are so important that our buying decisions, marketing strategies, and raw material purchasing procedures have been changed. Because of the volcanic origin of Guatemalan soils–which means iron toxicities–and the severe acidity of these same soils–which translated to aluminum and manganese toxicities–there is practically no available phosphorus in most Guatemalan soils, even though large amounts of phosphorus have been applied. Before this problem was diagnosed, farmers were applying more and more NPK or NP fertilizers and obtaining a response. However, this will never solve the basic problem of micronutrient toxicities and low pH. Massive doses of dolomitic limestone have been prescribed, and in these acid soils we have been successful in using phosphate rock. The phosphate rock functions well in soils where pH varies from 4.5 to 5.5 and can be applied either by itself or with another product such as MAP to provide some immediately available phosphate and some slow-release phosphate. In our compaction plant we can

mix phosphate rock, MAP, and limestone and obtain this very satisfactory mix which is used for practically all coffee formulations. Our trials show that with this program we retain more phosphorus from crop cycle to crop cycle, and improve the pH of the soil considerably in just 1 year. One formula is 4-29-0 with 15% calcium from limestone and phosphate rock. This formulation has also worked well on upland rice.

Another common denominator of Guatemalan soils is the need for calcium, whether it is because of a pure deficiency of calcium or imbalance between calcium and magnesium or calcium and potassium. Other soils in irrigation districts contain large quantities of soluble salts, so gypsum is prescribed. It is not uncommon to see 1.5 to 4 tonnes of either limestone or gypsum recommended per hectare for many soils.

Finally in 90% of all Guatemalan soils, two or more micronutrients are deficient. In acid soils the deficiencies are zinc, boron, and copper—in that order. The alkaline soils are usually deficient in all micronutrients.

Basic Research

Even with correct data from the soil laboratory (rechecked periodically by U.S. laboratories), there is no substitute for a leaf analysis to give an idea of how the fertilizer has performed. With the leaf analysis program we have found two serious problems that must be corrected.

According to all soil laboratory reports, potassium is sufficient in practically all Guatemalan soils. However, through the years our competitors' sales and our own numbers indicate that the farmer is still using more 15-15-15-type formulas than NP formulas. This would seem to indicate a response to potassium in the field. Many of the samples taken for the soil analysis are taken before the rainy season begins so it is possible that at that time there is sufficient potassium in the soil; but we live in a tropical country. During the last 2 years precipitation has been especially bountiful, to say the least. This has caused a loss of available potassium to the plant. In intensive vegetable farming irrigation is a constant factor. Most irrigation districts contain heavy clay soils, which do not fix the potassium but reduce the quantity the plant can absorb in its short growing cycle. Therefore, the farmer is correct in assuming that the addition of potassium will produce a response; 15-15-15 functions better than NP formulas for practically all crops. This has been proven through leaf analysis where it is very common to see a soil analysis with sufficient potassium but a leaf analysis showing a deficiency of this nutrient. Field trials have shown that in all crops a response has been obtained from additional potassium applications, and best responses have been from those fields where the applications were made up to three times, first as

NPK with a micronutrient application, followed by two applications of NK fertilizers.

With boron, similar results have been obtained, especially in boron-sensitive crops such as strawberries, broccoli, and cauliflower. Boron lixiviates similar to potassium, therefore, best results have been obtained by applying the boron either as an NK + boron fertilizer or as a foliar application.

Another serious problem seems to be the excessive use of urea in many areas of the country. It is not rare to see farmers apply two or three times the recommended nitrogen rate to their crops. We have found that, especially in the intensive crops under irrigation, pesticide use has been very high for many years. This has killed many microorganisms needed to carry out the ammonium/nitrite/nitrate transformation in the soil. Our research shows that a more economical approach is to use ammonium nitrate, calcium nitrate, and potassium nitrate instead of high applications of urea.

Agronomists

Our company has traditionally had a bias against fertilizer sales personnel. Our early competitor, FERTICA, was characterized by the use of a large number of agronomists and thus high overhead, and this was successfully used against them. However, there is really no substitute for field personnel to introduce new fertilizers, provide service to the many import companies operating in Guatemala, study fertilizer reactions, and attend to our distribution network.

Our twelve agronomists are stationed throughout the country geographically; they are required to carry out certain studies depending on the particular crops and soil types in their areas. The agronomists' studies and services have many objectives, which include following up on our fertilizer recommendations, demonstrating correct application methods, providing field days for local farmers, demonstrating the correct use of pesticides, promoting soil conservation, demonstrating soil preparation methods, and showing a multitude of other benefits that an integrated program can give to the farmer.

Results of these demonstrations are transmitted to our sales outlets, where sales personnel stationed at the warehouse try to elicit certain information from the farmer, such as the crops he will grow, the location of his plots, and the type of seeds to be used. Then, and only then, should they sell the farmer fertilizer. Free soil sampling will also be given through our own

soil laboratory as long as the farmer promises to abide by the recommendations based on the analysis. This soil laboratory will begin operation in 1990.

Public Relations and Advertising

Normally speaking, fertilizer companies spend little on advertising and public relations. Our goal has been to educate the farmer about his choices. This education program must be ongoing because still 60% of the land in Guatemala receives no potassium. Micronutrients are not commonly used. Local fertilizer distributors usually know little about fertilizers. Most technicians have serious misconceptions about the difference between chemical (meaning NPK granulated) and physical (meaning blended) products.

In our advertising campaign we have used radio, television, newspapers, field days at our plants, free literature, forums for university students, plus the programs described herein in an effort to educate all involved in food production about soil problems and the alternatives available for correcting those problems.

In fertilizer conferences such as this, one often forgets we are members of the food chain. When I joined the Peace Corps in 1972 the average corn yield in Central America was 25 bushels per acre, the population of Guatemala was 5 million, and the cost of a bag of corn was from 5 to 11 Quetzals. Seventeen years later the yield is now 30 bushels per acre, the population is 9 million, and the cost of that same bag of corn has at least tripled.

Because of low yields, Guatemala now feeds itself from the Peten rain forest, the worst possible area to plant corn in all Central America. Obviously, the future is bleak unless yields are increased. For some reason the Malthusian theory, which basically states that food production increases arithmetically while population increases geometrically, has been forgotten or discounted. But we have not escaped population growth and we have not applied the information at hand to better the quality of our food or increase yields. We cannot turn on the faucet and expect the developed countries to produce what we in the Third World are unable to produce. It must be a common goal of fertilizer producers, farmers, governments, pesticide producers, universities, and others to educate the consumers in how to achieve better food production.

Bulk-Blended Fertilizers in the Dominican Republic – Fertilizantes Quimicos Dominicanos, S.A. (FERQUIDO): A Case Study

Marcial Najri, Assistant to the President, FERQUIDO – Dominican Republic

Introduction

In order to establish the scenario for my presentation, permit me to review some historical and current aspects of the fertilizer industry.

Essentially, granular compound fertilizers can be conveniently divided into two general groups:

- Those whose production explicitly involves some form of chemical reaction.
- Those in which two or more nutrients are mixed by physical or mechanical means.

In the second group we find:

1. Fertilizer formulas obtained by "bulk blending" granular solid materials such as urea, DAP, and potash.
2. Mixtures of dry powdered or previously granulated materials to which water or steam is added to promote the formation of homogeneous granules.
3. The compaction/granulation process in which different dry fertilizer materials are forced together (pressed) into a sheet which is then crushed and screened to the desired granule size.

Probably the need for mixing fertilizer nutrients before incorporation into the soil arose as a practical and natural response of the farmers to provide in one application two, three, or more nutrients. This practice, when agronomically justified, would always be economically desirable.

As known in the United States, in the initial dry mixing of fertilizers, the materials were nongranular and little attention was paid to matching granule sizes or avoiding side chemical reactions which produced extensive caking during storage. To alleviate this problem, conditioners such as hulls of seed, rice, or groundnuts were used, or the fertilizer once mixed was stored

(cured) in bins for several weeks until the chemical reactions subsided. The cured but highly caked mix was then crushed to pass a 6-mesh screen.

The starting point for blending granular fertilizer was established in the United States in 1936 when the Davison Chemical Company of Baltimore, Maryland, began the first operation on a commercial scale. The rapid increase of bulk blending in the decade of the 1950s and 1960s seems to have occurred concurrent with the growth in the availability of granulated products, and by 1964 it was estimated that over 1,500 bulk-blending plants were operating in the United States. By 1976, about 58% of all compound fertilizers sold in the United States were blends.

This growth is understandable because caking and segregation (the two main constraints to the use of physically mixed fertilizers) were being minimized and the availability of well-suited raw materials became widespread.

Other reasons that help to explain this impressive development in the utilization of bulk-blended fertilizers include:

1. The initial cost of the plant installation is many times greater for the "chemical mixtures" or pelletized fertilizers than for the bulk blends.
2. Bulk blending provides greater flexibility in the number of possible formulations. In the NPK granulation (chemical) process the production parameters cannot be economically changed frequently. Bulk blending is ideal in order to produce the various formulas in relatively small quantities, as demanded by the great variety of soils and crops or recommended by the agronomists. This factor could be of much more influence in tropical countries than in the United States. This theme will be discussed later.
3. The pelletizing process requires more energy, which usually leads to a higher cost for the final product.
4. The ease with which bulk-blend formulations can be made is very attractive. The plant operation costs are expected to be higher for the granulation plant partly because of higher costs due to the specialized labor required for the more complicated system.
5. The introduction of new techniques and machinery for the mixing and handling of the products has helped in eliminating some of the negative factors that affected bulk blends during the first years of its development.

Bulk Blends in the Dominican Republic

By 1948-50 the first 200 tonnes of ammonium sulfate was introduced into the Dominican Republic by FERQUIDO. This fertilizer was intended for use on the main crop (sugarcane) of that period. The results were said to be so spectacular that the next year the total sale of all fertilizers was 2,000 tonnes, including phosphates and potash. The growth was fast and the need for formulations, which initially were prepared by shoveling the components into a cement mixer, led FERQUIDO to install the first bulk-blending plant for fertilizer in the Caribbean region in 1956. Following a fire in 1967, this plant was totally rebuilt the year after. In 1968 another bulk-blending plant was set up; then it took 13 more years before a third and smaller producer came onto the scene. This newcomer was, in fact, the major dealer of granular chemical fertilizer, which underwent a major strategical change, partly as a consequence of actions that will be analyzed in the next paragraphs.

Fertilizer Use

Estimated total consumption of fertilizer materials in the Dominican Republic is presented in Table 1.

Table 1. Fertilizer Consumption in the Dominican Republic

Year	Fertilizer Consumption (thousand tonnes product)
1957	45
1960	38
1962	50
1964	56
1966	43
1968	60
1970	90
1972	150
1974	160
1976	169
1978	145
1980	195

It is interesting to contrast the rather slow increase in fertilizer consumption during the period 1957-68 (average growth rate of 2.8%) with the period 1970-80 (average growth rate of 10.6%).

It has been suggested that the political stability in the second period was the primary factor which permitted a sustained agricultural development and good prices for sugar. Other crops were being fertilized much more in the 1970s than in the 1960s. It should also be pointed out that the expansion in rice cultivation and the introduction of new high-yielding varieties as well as improvements in cultivation technology all resulted in higher fertilizer use. Also, bulk-blended fertilizer was being exported to the nearby Windward and Leeward Islands in the Caribbean and to other countries including some in Central America and Africa. There were years in which this represented up to 20% of total sales. The fertilizer consumption went down slightly after 1980 and will probably keep oscillating in the range of 170,000-200,000 tpy up to the present. An appraisal of the situation as we saw it by 1980/81 is presented in Table 2.

Table 2. Analysis of Fertilizer Consumption in the Dominican Republic in 1980/81

Crop	Hectares	% of Area Fertilized	Rate (kg/ha)	Consumption[a]	% of Total
Sugarcane	265,000	80	500	106,000	60.0
Rice	90,000	90	430	34,830	19.7
Coffee	150,000	20	360	10,800	6.1
Tobacco	23,000	40	400	3,680	2.1
Plantains	40,000	15	350	2,100	1.2
Potatoes	2,200	100	700	1,540	0.9
Pastures	1,100,000	2	300	6,600	3.7

a. Tonnes of product per year.

This table illustrates how dominating sugarcane and rice were in our fertilizer market. Since sugarcane used practically no pelletized fertilizer, pelletized fertilizer was being sold in the rice markets. Three formulas,

15-15-15, 12-24-12, and 16-20-0, were basically the only ones being promoted by the representatives of the granular chemical fertilizer producers; in fact, these three constituted the main products in the market.

During the decade of the 1970s, the pelletized granular fertilizers enjoyed their highest share of the market. A combination of a very effective campaign against the bulk-blended fertilizers, which in those years were not perhaps of the best quality, and the extensive use of a few basic formulas (15-15-15, 12-24-12, and 16-20-0) helped significantly to introduce the chemical mixed fertilizer. There were also years in which the price differential was not enough to keep farmers from buying the chemically granulated products. In many cases cosmetic and illusory differences were also part of the game. Colored chemical fertilizers were being marketed – red, blue, and others.

The usual share for chemical compound fertilizer was 5%-10% of total consumption, but there were years in which the share reached perhaps 20%. This situation probably was extended by the decision of one of the bulk-blended fertilizer dealers who decided to get involved in the importation and direct selling of chemically granulated fertilizers.

Introducing Bulk-Blended Fertilizers

To counteract the aggressiveness of those who sold the chemical-type fertilizers, which were steadily gaining ground, it was necessary to develop a strategy.

First, it was frankly recognized that the quality of the bulk-blended fertilizer had to be improved. The need for matching particle sizes of the raw materials as closely as possible was deemed necessary to avoid segregation. Segregation was believed to be the Achilles' heel of the bulk-blended fertilizers in the Dominican Republic, as well as elsewhere. Lack of segregation was a major selling point of the chemically mixed fertilizers in addition to all nutrients held in one grain, chemical stability, and other "magical properties."

Efforts to match the particle sizes of the raw materials coincided with the availability in the world fertilizer market of granular urea and a much better sized granular ammonium sulfate. TSP and DAP were already being sold as a granular product (90% minimum, minus 6- plus 16-mesh). Basically, granular muriate of potash, rather than coarse or "run-of-pile," was the only new raw material required.

It was also necessary to avoid caking and undue moisture in the blends. Thus, care was exercised to avoid using too much urea in a formula or making unacceptable combinations such as ammonium nitrate-containing materials with urea, or urea-triple superphosphate, or triple

superphosphate-DAP mixtures. The relative humidity was observed at the plant, and the production of certain high-analysis (hygroscopic) formulas was avoided at certain times of the day when the humidity was very high.

A new inert filler was introduced – a rather hard, granular calcium carbonate, and in some cases, clean granular sand. Also, the filler was kept at a minimum by discouraging low-analysis formulas.

Efforts were made for better overall handling of the products. The blends were delivered as fresh as possible in order to avoid long storage. Attention was given to the quality of the bag and thickness of the internal liner.

This effort to improve the quality of the fertilizers was accompanied by educational programs for the farmers regarding fertilizer composition and use. In 1972 the soil analysis program was resumed; the FERQUIDO agricultural laboratory was equipped and its personnel were trained. Some of the people were sent to U.S. universities, IFDC, and TVA to participate in training courses. This was also done with the sales and marketing personnel.

Numerous field days were held and many talks, employing audiovisual aids, were conducted with the farmers. The advantages of bulk blends were emphasized, and the manner in which the blends were formulated was demonstrated right on the spot. A common misunderstanding arose about the presence of a filler. It was always interpreted as adulteration, "something extraneous in the bag." Thus, another good selling slogan for chemical mixtures was: "There is no sand in our fertilizer bags."

Overcoming the adverse publicity about fillers took much effort. It was difficult to refute even with several agronomists. We worked hard on this problem. As a result, it was later considered convenient to hold open-house activities not only with farmers but with agricultural agents and local officials. A group of people were systematically taken to our plant every 2 or 3 months. There we went through the whole process of bulk blending, letting the visitors see how we made their formulas, letting them touch it, and letting them add the filler to a given mix. After visiting the plant the farmers were taken to an appropriate place where a technical seminar was given. An ample interchange of ideas was promoted. The farmers presented their problems, asked questions, and our agronomists did their best to offer satisfying answers. There were open and frank meetings of FERQUIDO personnel and the farmers. Adequate opportunity was always given the farmers for discussing field trials previously conducted on their farms and the soil analysis report that our laboratory had sent them. The soil and plant analyses were free of charge.

An important part of these activities was adjusting the fertilizer formulas to fit the needs of the many different soils and crops encountered in tne Dominican Republic. The different needs for NPK at various physiological stages of the crop were emphasized. This, of course, suggested that more than three to five formulas were necessary.

Secondary and Micronutrients

It should be mentioned that magnesium, sulfur, and micronutrient deficiencies were being detected. Thus, in the case of coffee, magnesium and zinc were recommended. Sulfur was promoted for growing potatoes and zinc was recommended for tomatoes, rice, and sorghum.

Soil analysis data indicated that liming was needed in many acid soils of the country. Then, magnesium had to be balanced through the use of fertilizer because dolomite was not available. Plant analysis confirmed deficiencies, so foliar application of micronutrients was also being understood and used.

Improvements in Product Quality

All these services of soil and plant analyses were (and still are) strong selling points for the FERQUIDO products from its first bulk-blending plant. The chemical granular fertilizer producers concentrated on marketing a nicely packaged product as opposed to our physically blended product which needed to be improved somewhat.

We went to the universities, agricultural colleges, agricultural extension offices, and others while steadily improving our granular bulk-blended product. It was necessary to maintain a standard bulk-blended product that could still be used for mixing with other standard (nongranular) materials thus offering a line of products with different price choices.

The fact that the Dominican Republic bulk-blending fertilizer industry was adding value to the imported fertilizer raw materials was often opposed. This added value accrued through formulation, bagging, and developing a whole system for distributing fertilizer as well as rendering technical and agronomical service to the farmers. This topic was openly debated whenever and wherever it was necessary to defend these practices against the simple importation of finished products offering limited formulations. The importation of bagged products also added very little to the local economy and could also hamper learning about the appropriate use of fertilizer and its enormous benefits to food production.

The effort has paid off; the bulk-blended fertilizer business has established itself in the market. Today, pelletized or chemically granulated fertilizers are not a factor in the Dominican Republic market. Today, the

market does not show any degree of preference toward chemical mixtures, even though such fertilizers have been available in considerable quantities through centers of distribution operated by the Ministry of Agriculture. Some of these chemically mixed fertilizers have been donated by competitors such as the Japanese Government in an open and unfair competition with the bulk-blended fertilizers produced in the Dominican Republic under a free-enterprise system.

Looking to the Future

Today's agriculture in the Dominican Republic is undergoing important changes. Production of nontraditional crops oriented for export will probably determine the fertilizer market in the near future. Land cultivated to pineapples, citrus fruits, avocados, vegetables, melons, and burley and Virginia tobacco is growing rapidly. These are crops on which the return on investment is looming high, and therefore, appropriate technology is urgently needed. We are witnessing "high-input technology" in the Dominican Republic. The fastest growing crops in this category are shown in Table 3. Six years ago sugarcane and rice were the two major crops significantly affecting fertilizer consumption in the Dominican Republic (Table 2). Except perhaps for tobacco, the other crops were not very influential.

The cost of producing fertilizer has increased significantly in the last few years and efficiency in production is a prerequisite to being successful. Consequently, more attention is given to industrial crops such as tomatoes,

Table 3. Nontraditional Crops Now Being Grown in the Dominican Republic

Crop	Under Cultivation (ha)	Estimated Fertilizer Use[a]
Pineapples	5,000	8,000
Citrus fruits	9,000	7,000
African palm	6,250	5,000
Coconuts	3,000	1,800
Melons	2,000	2,000
Avocados	1,000	700
Burley and Virginia tobacco	1,000	700

a. Tonnes of product per year.

coffee, cacao, cotton, bananas, and others which are traditional. There are also other new projects such as African palm, coconuts, and flowers to which the private sector is devoting much attention. The area planted to these crops is expected to increase and the crops to be handled economically.

It should also be mentioned that some interest is evolving in fertilization of pasture land. Beef and milk production are essential components of a healthy national economy. Several surveys have shown unequivocally that the lack of abundant and good quality pasture is a serious handicap in economically improving dairy and beef cattle. Very little fertilizer is used in this sector (Table 2). Thus, the conditions exist for this fertilizer market to be developed. This is being recognized by a recent joint project between the United Nations and the Dominican Republic to increase milk production in the eastern part of the island.

We could partly attribute all these changes to the effects of the United States regional program called the Caribbean Basin Initiative (CBI). New agencies supported by USAID are actively promoting private investments in agriculture, and programs are underway for installing more agriculture laboratories.

The need for technical services of all sorts is apparent. Promoting intensive, high-input agriculture requires the expertise which can only be provided by qualified personnel who participate both in applied research and in guiding the farmers/investors at the field level. This highlights the fundamental need of human resources to ensure the success of these projects.

Foundations and agricultural colleges are now receiving economic support which appears to be an integral part of the previously mentioned changes.

Fertilizer is probably the single, most influential factor in attaining high yields in intensive agriculture. Our experience shows that on average soils, when properly used, fertilizer alone explains over 50% of the yields. This is the case for coffee, rice, tomatoes, melons, and others. There are some other cases such as pineapples, citrus fruits, and avocados in which yields would be extremely low if the crops were not fertilized.

However, in terms of tonnage, what we have seen is that for several years an increase in the market or the creation of a new fertilizer market with nontraditional crops would temporarily offset the decrease of fertilizer consumption for sugarcane. Sizable areas, previously cultivated to sugarcane, are now planted to pineapples and citrus fruits.

Since nontraditional crops use more fertilizer per unit of land, it will not be long before an actual increase in total fertilizer consumption is seen. Once avocado and citrus fruit groves, coconuts, and African palm plantations reach maturity, the increase in total fertilizer use will most probably become evident.

The answer to this expected increased demand for fertilizer is not necessarily found in a simple supply system. As already stated, the new agriculture we are dealing with requires fertilizer plus service. A successful fertilizer business requires a good quality product along with the kind of service that enables the customer to get the best profit possible per unit of fertilizer input. In terms of bulk-blended fertilizer, this implies the following:

1. The availability of raw materials during peak demand.

2. A well-structured marketing system which permits prompt delivery; for example, one that requires only a short period of time from the moment the order is placed until delivery is made. This, in turn, requires (a) good transportation facilities, (b) storage facilities near consumption centers to attend to demands all around the country, (c) promptness and skill in processing credit applications, (d) a good communications system, (e) expedience in attending to customer's claims when they arise, (f) a good advertising policy, and (g) the maintenance of good social relations with the public by employing well-trained personnel. Finally, a competitive price is required if one is to remain in business. The last factor, of course, will reflect the whole efficiency of the operation, both at the production and marketing levels.

3. The need for technical service in fertilizer companies is usually seen as part of the marketing system. In the particular situation of the Dominican Republic where agricultural research and the availability of technical information are lacking, it is important for a bulk-blended fertilizer manufacturer to have a strong agricultural service department, including a laboratory for soil and plant analysis. The laboratory should also provide the quality control for raw materials and finished products, which is of utmost relevance in bulk-blend formulations.

FERQUIDO, in its new administration, not only recognizes the importance of maintaining high quality and good services in its bulk-blending operations but has enhanced it. We have also given a new impulse to the idea of technical support, and continue to enlarge these services within a philosophy of openness and high professional standards. FERQUIDO's agricultural laboratory, with more than 15 years of experience, is assisting a large number of growers in the Dominican Republic. It helps in ensuring a good-quality product and, what is important, reflects FERQUIDO's

commitment toward serious marketing. A network of warehouses and a staff of professional agronomists distributed throughout the country guarantee rapid and efficient service.

FERQUIDO, by understanding and meeting the challenges posed by a competitive and more technologically demanding fertilizer market, is equipped to pursue a future of excellence and economic success in the business of bulk blending in the Dominican Republic.

Bibliography

Doshi, S. R. 1989. "Mixed Fertilizer Granulation. The Technology for Developing Countries," Paper presented at the International Conference 'Fertilizer Latin America,' Caracas, Venezuela.

FERQUIDO's historical data (unpublished).

Hignett, T. P. 1965. "Bulk Blending of Fertilizer: Practices and Problems," Proc. No. 87, The Fertilizer Society.

Hoffmeister, G. et al. 1964. "Bulk Blending of Fertilizer Material: Effect of Size, Shape, and Density on Segregation."

International Fertilizer Development Center. 1979. *Fertilizer Manual.* IFDC-R-1 (also available from the United Nations Industrial Development Organization, Vienna, Austria), Muscle Shoals, Alabama 35662, U.S.A.

Lupin, M. S., and N. D. Le. 1983. *Compaction–Alternative Approach for Granular Fertilizers*, Tech. Bull. IFDC-T-25, International Fertilizer Development Center, Muscle Shoals, Alabama 35662, U.S.A.

National Fertilizer Development Center. 1973. *Bulk Blending Conference*, TVA Fertilizer Bulletin. Y-62, Tennessee Valley Authority, Muscle Shoals, Alabama 35660, U.S.A.

Silverberg, J. et al. 1961. "Comparison of the Costs of Liquid, Bulk-Blended and Granulated Mixed Fertilizers," Commercial Fertilizer and Plant Food Industry.

Colombia – The Commercial Rationale for Blending

William Bastian, Assistant Vice President, Cargill, Incorporated – United States

Introduction

My Cargill associates, from Colombia, Chile, and Argentina, and I are pleased to be a part of this workshop and wish to thank IFDC and FERQUIGUA for making this event possible.

As you can see from the title of our presentation, we are more commercially oriented than technical. However, we all look forward, after spending 4 days with such a distinguished group of experts, to leaving with a higher level of technical and agronomical knowledge than that with which we arrived. Personally, I can assure you that it will not be difficult for me.

Before going into our discussion on Colombia – The Commercial Rationale for Blending – I feel it would be helpful to give a brief discussion of what the Cargill Fertilizer Division is all about.

Many still think of the Cargill Fertilizer Division as primarily being involved in the international trading of fertilizer. While this may have been true 10 years ago, much has happened over the past 10 years to change Cargill's fertilizer profile to one of a producer, wholesaler, and retailer. Our international trading activities remain an important support function to aid in the origin of products and to maintain a pulse on market trends that could affect the global fertilizer supply and demand which ultimately affects the price.

In addition to owning the Gardinier phosphate production facility in Florida, which produces 1.5 million tpy of finished product in the form of DAP, MAP, and TSP, Cargill has wholesale and retail operations in Canada and the United States which market, outside of Gardinier, over 1,500,000 tpy of fertilizer and agrochemicals. An integral part of Cargill's North American fertilizer structure is 150 blending plants which vary in size from 1,500 tpy to 8,000 tpy.

Cargill has carried this wholesale/retail philosophy offshore to Colombia, Chile, Argentina, Japan, and Western Europe, where annually we market a total of about 800,000 tonnes of fertilizer products.

The Cargill Fertilizer Division's mission statement provides the following summary of the long-term objectives Cargill has as a member of the fertilizer industry.

> Cargill Fertilizer Division will source, process, trade, transport, warehouse, and market high-quality fertilizer ingredients, products, byproducts, and services to wholesale terminals, retail dealers, farmers, co-ops, governments, and industrial users worldwide where:
>
> 1. There is a need.
> 2. We can compete ethically.
> 3. We can be competitive.
> 4. There are acceptable political and economical risks.
> 5. Cargill already has an agricultural-related presence.

For many in our industry, these objectives may seem idealistic and impossible to achieve. However, with the support of our owners and the 55,000 people who work for Cargill worldwide, we feel we have the resources to methodically bring our expertise into markets where Cargill can fulfill a legitimate role.

Background – The Setting in Colombia

The debate on the pros and cons of blended fertilizers versus compound fertilizers has been going on for years and will most probably continue for years to come. We have seen this topic debated in Venezuela, Colombia, Brazil, Mexico, the United States, and Canada.

In our discussions on Colombia, we will not even attempt to debate this issue but will focus on the strategic, economic, and commercial benefits of blended fertilizers for a specific market area, the Cauca Valley in Southern Colombia.

To better understand the complexities of fertilizer distribution in Colombia, one needs to be familiar with the topography of the country, the location of existing compound product plants, and the market areas they attempt to serve. Figure 1 is a map of Colombia that shows these data.

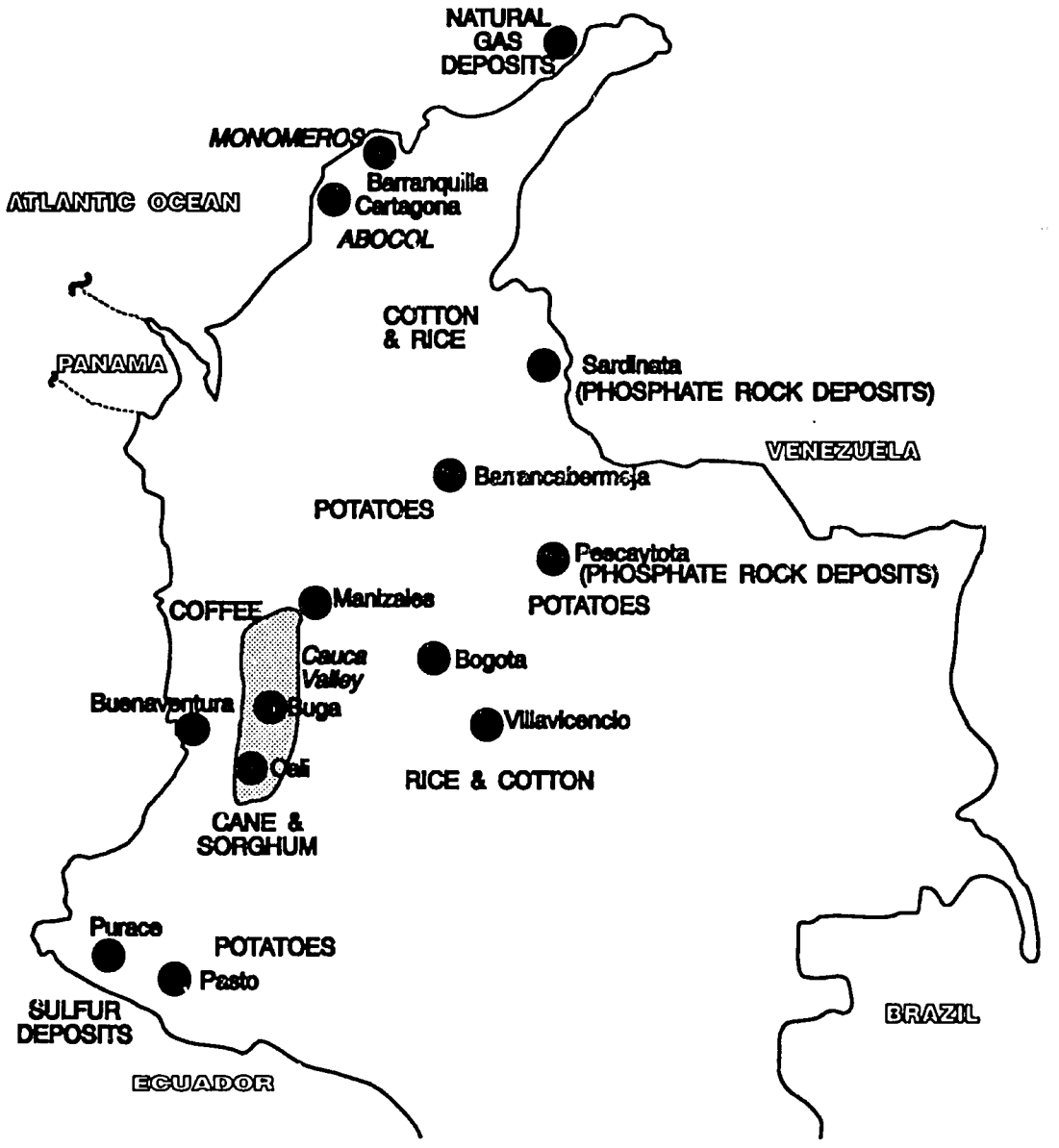

Figure 1. Main Areas of Agricultural Production and Location of Fertilizer Production and Raw Material Reserves Within Colombia.

Colombia has approximately 1,100,000 km^2 of land. Due to the mountainous terrain of the country, combined with the savannahs bordering Venezuela, Brazil, and Peru, only 28% of this land mass is economically arable.

This 28% is made up of 5% in crops and fallow, 14% in pasture, 6% in forest, and 3% in urban or other uses.

The Colombian market today has a demand for approximately 600,000 tonnes of compound NPK fertilizers and 500,000 tonnes of simple fertilizers for a total of about 1.1 million tonnes.

Six national producers (Table 1) and various importers supply the market's need.

Table 1. Existing Colombian Production Units

Plant	Annual Capacity (tpd)	Product(s)
AMOCAR	105,000	Ammonia
FERTICOL	25,000	Ammonium nitrate
	10,000	Urea
MONOMEROS	50,000	Ammonium sulfate
	400,000	NPK compounds
ABOCOL	150,000	NPK compounds
FOSFACOL	5,000	Phosphate rock
Acerias paz del Rio	3,000	Ammonium sulfate

MONOMEROS, with an installed compound NPK product capacity of 400,000 tonnes, and ABOCOL with 150,000 tonnes are the principal suppliers of NPKs. The annual consumption of NPK fertilizers in Colombia is shown in Table 2.

Due to the limited national production of urea and the absence of national production of DAP and potash, these products must be imported to serve the large simple fertilizer requirements of the country. The Pacific Port of Buenaventura (Figure 1) is the primary entry point for 65% of all simple fertilizers consumed in Colombia. Table 3 shows the annual tonnages imported through this port.

Table 2. Primary Consumption of NPK Fertilizers in Colombia

Fertilizer Grade and Use	Annual Consumption (tpy)
17-6-18-2 MgO – Coffee	250,000
15-15-15 – Feed and food grains	160,000
13-26-6 – Potatoes	85,000
10-30-10 – Potatoes	55,000
Miscellaneous	50,000
TOTAL	600,000

Table 3. Imports Through Buenaventura Port

	1986 Actual	1989 Projection	% Increase
	(tpy)		
Urea	148,000	250,000	69
DAP	10,000	35,000	250
KCl	16,000	60,000	275
TOTAL	174,000	345,000	98 (Average)

Comparing 1986 reported fertilizer imports with 1989 projections (Table 3), one can see the important role imported simple fertilizers have in meeting the demand that the national producers are unable to meet.

Table 4 shows the ratio of simple fertilizers versus that of compound fertilizers consumed in Colombia. An analysis of these numbers shows that in 1987 the national manufacturers, operating at capacity, could not keep up with the demand which amounts to about 1.1 million tpy.

Table 4. Comparison of Fertilizer Consumption – Simples Versus Compounds

Year	Fertilizer Type: Simples	Fertilizer Type: Compounds	Total
	(% of total)		(%)
1978	45.9	54.1	100
1979	41.4	58.9	100
1980	44.6	55.4	100
1981	44.5	55.5	100
1982	46.8	53.2	100
1983	47.8	52.2	100
1984	51.4	48.6	100
1985	51.0	49.0	100
1986	48.6	51.4	100
1987	50.1	49.9	100
1988	50.5	49.5	100
1989	51.0	49.0	100

The marketing channels in Colombia (Figure 2) for a country that consumes about 1 million tpy product are relatively simple.

We have the two compound producers who also import and distribute nationwide. They focus their efforts on the two large cooperative-type buyers, the Coffee Federation and the Caja Agraria. Importers, who do not have access to NPKs but do import urea, potash, and DAP, concentrate on selling to the independent retailers.

Despite the inability of national production to meet the demand for NPKs and to cater to the smaller farmer with a customized formula, the national producers have been very successful in lobbying to persuade the government to impose import duties and taxes which prohibit the import of compound NPK fertilizers.

A small duty and tax are assessed on imports of simple fertilizers used for direct application, but as of today these duties and taxes do not prohibit

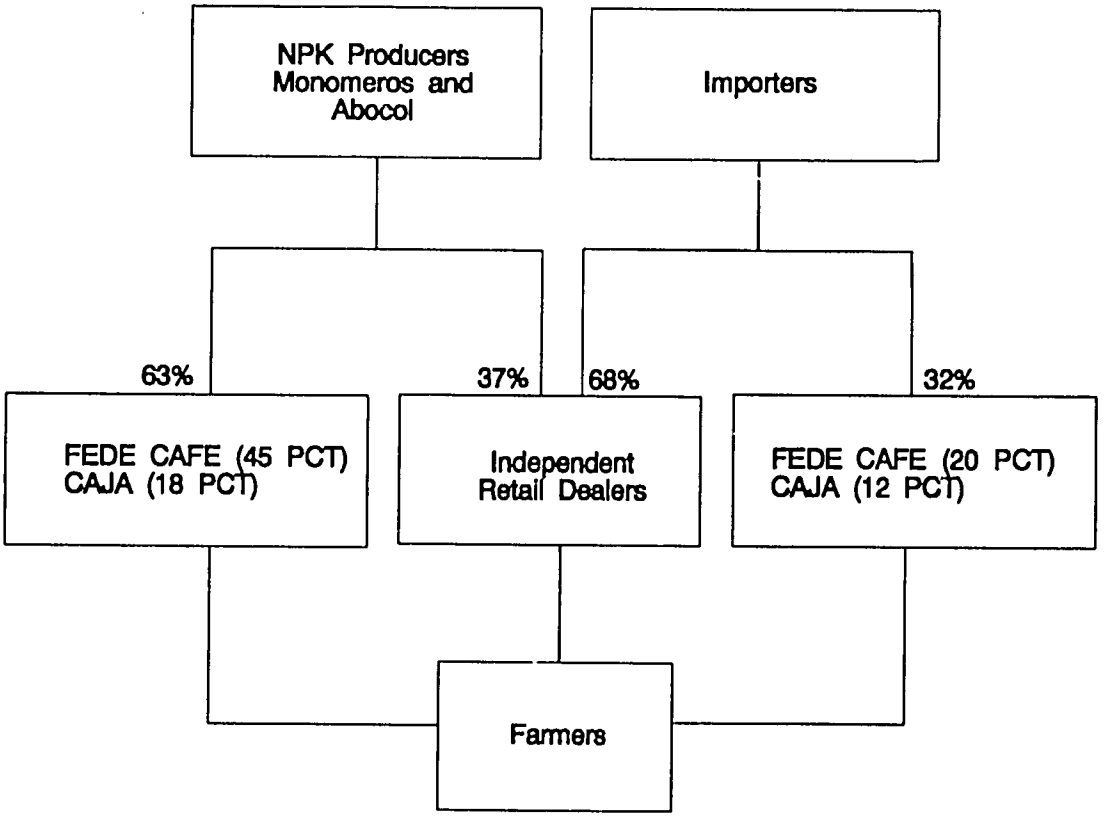

Figure 2. Marketing Channels for Fertilizer in Colombia.

the cost effectiveness of blending fertilizers locally as an alternative to nationally produced compound NPKs.

Until recently, the Government worked jointly with MONOMEROS and ABOCOL in establishing price controls for all nationally produced compound fertilizers.

Ironically, the coffee formula, which had the highest price and was subsidizing the lower priced NPKs, forced the Coffee Federation, the largest single buyer in Colombia, to assess the cost of the farm inputs supplied to the coffee growers when international coffee prices plummeted.

The end result was the realization that they could import the raw materials and manually blend them in the field far cheaper than that of the government-established price agreed upon with the national NPK producers.

After a brief period of decreasing purchases from the national manufacturers and increasing imports of simple fertilizer, the established price for the nationally produced coffee formula decreased and the price for the other formulas increased.

This fraternal system is disliked by many in the agricultural community. The Colombian free enterprise system discourages this quasi monopoly. Instead, it prefers that NPK prices be governed by the law of supply and demand.

Re-Introduction of Blending in Colombia

With current Colombian laws permitting both simple and blended fertilizers to be sold at free market prices, without support or intervention from the Government, the mood and timing are right to re-introduce quality customized bulk blends into the Colombian market as an alternative to the limited variety of nationally produced or imported compound fertilizers.

Despite its relatively small size, the arable land in the Cauca Valley is considered the bread basket of Colombia.

Because of its mild annual climate, farmers in the Cauca Valley are able to plant two to three crops per year, thereby creating an increasing demand for fertilizer and other agricultural inputs.

Annual consumption of NPK fertilizer in this area exceeds 350,000 tonnes, more than half the total NPK consumption in the country.

The farmers in the Cauca Valley hold a high social position within Colombian society. They are good businessmen who are cost conscious and are always seeking ways to increase productivity through maximum economic yield.

When traveling through this area, one is surprised by the minimal use of manual labor as compared with other developing areas. Farming in the Cauca Valley is highly mechanized, with John Deere tractors pulling chisel and disk plows and modern seed and fertilizer applicators being used on most of the larger farms. The smaller farms are mechanized to a lesser extent but still

depend on less manual labor than their counterparts in other Latin American countries.

In the Cauca Valley and surrounding area, we can find almost every commodity produced in Colombia including rice, cotton, sugar, wheat, barley, and potatoes.

The variety of crops and differences in soil fertility create the need for a more specific, customized fertilizer which the local industry cannot provide, primarily because of the distance from the market and the limitations and economies of their compound NPK production units.

In many ways the farmers in the Cauca Valley are not much different from the farmers in the United States.

1. They want the best buy for their money.
2. They want quality product and services.
3. And most importantly, they want to place an order today for delivery yesterday.

Location of Blending Plant

The distance from the MONOMEROS and ABOCOL plants (Table 5), combined with the limited national road system and inefficiency of the internal supply pipeline, makes it difficult for the national producers to provide the more distant farmers with prompt delivery at a price similar to that given to the farmers closer to the plants.

Table 5. Distance From Local Production/Supply Units to Consumption Areas

Production/Supply Location	Distance to Consumption Area			
	Manizales	Buga	Cali	Pasto
	(km)			
Barranquilla (MONOMEROS)	1,039	1,123	1,223	1,541
Cartagena (ABOCOL)	895	999	1,099	1,403
Buenaventura	426	132	142	586

If this major consuming area cannot be well served directly from the national production, then what other legitimate alternatives exist? In our evaluation there is only one alternative and that is to supply this area through the state-owned Pacific Port of Buenaventura, the largest commercial port in Colombia.

The exports of bagged coffee and other commodities from the Cauca Valley and surrounding areas create a backhaul demand in the Cauca Valley which bagged fertilizer capitalizes on.

Looking at the distance comparison (Table 5), one can see that a 1- to 2-day delivery to the farm is possible when dispatched directly from Buenaventura, whereas such a delivery time is impossible from Cartagena or Barranquilla, where the national NPK products are manufactured.

The dramatic increase in fertilizer being processed through the Port of Buenaventura indicates that others also realize this is the shortest distance and most economic means to serve the customers in the Cauca Valley.

The inland freight savings from Buenaventura to the Cauca Valley (approximately US $20 per tonne over the Atlantic producers) provide a competitive advantage, but one not as great as it may at first appear.

Both ABOCOL and MONOMEROS have their own private berths and warehouses at their plant site, whereas anyone today going through Buenaventura has to use contract labor to discharge the vessel and bag the product using limited warehouse capacity leased by a third party.

Total bulk fertilizer storage capacity at Buenaventura is about 25,000 tonnes and daily vessel demurrage rates run US $7,000 or higher. These facts, combined with the negative commercial consequences of late delivery to the farmer, underscore the importance of skillful management of the limited warehouse space. This means the difference between success and failure.

Nutrient Requirements and Fertilizer Grades

Despite limited use in Colombia, soil testing and leaf analysis are beginning to play an important role in the decisionmaking as to what type of fertilizer and how many kilos per hectare to apply.

Wide use of the generic-type NPKs, such as 17-6-18-2 MgO, 15-15-15, and 10-30-10, may create an economy of scale that financially benefits the manufacturer; but, are they providing to the customer what his fields and crops truly require? Many in the Cauca Valley would answer "no," saying that

there is a need for different ratio options that would include both macronutrients and micronutrients.

Those farmers who do not require a prescription blend and are satisfied with the generic-type NPKs provided by the local manufacturers have come to realize that they can economically replace compound 17-6-18-2 MgO with a blend of 20-5-20-2 MgO, compound 15-15-15 with a blend of 19-19-19 and compound 10-30-10 with a blend of 12-36-12. These more concentrated grades do not require a filler.

The concept of "more for less" gets the farmer's attention--less tonnage plus fewer bags reduces handling costs, thus increasing savings (profits).

It would be a big mistake to look at blending as a cheap, easy alternative to compound fertilizers.

The success of blends in this market will be dependent on five things:

1. Owner-operated warehouse/blending plant situated near the port.
2. Quality equipment to minimize product degradation and maximize the accuracy of blends and final bagged weights.
3. A commitment to use premium quality 2- to 4-mm granular raw materials for blends.
4. A commitment to provide soil testing, leaf analysis, and prescription blends for individual needs.
5. Competitive prices.

As of April 1, 1990, Cargill will be ready to face the challenge of serving the Cauca Valley farmers from our 20,000-tonne warehouse and 60-tph blending unit, with the same innovative, quality, customer-oriented services that Cargill currently provides its worldwide customers.

A Fertilizer Bulk-Blending Plant in Haiti – The Analysis of a Failure

C. John Currelly, Consultant – Haiti

Introduction

My Background

I am a Canadian from the southern part of Ontario where our family has farmed for five generations. I attended the University of Guelph and graduated with a degree in agriculture in 1971. My wife and I farmed about 400 acres for 10 years. During this time we cofounded a fertilizer company that markets liquid ammonium nitrate made from anhydrous ammonia used in a local uranium fuel refining plant. This business is ongoing and has grown to include the manufacture of a 28% liquid nitrogen line, the supply of storage and application equipment, a wholesale industrial supply company, and a trucking facility.

Why Haiti

Wanting to diversify our investments we looked at the Caribbean and realized that Haiti had potential for a fertilizer bulk-blending plant. During a 2-week visit in 1980 we saw that the market seemed to have growth potential and that there was no blending plant installed in Haiti although two plants were planned. Furthermore, the Government of Haiti gave the impression that they would welcome such an agricultural facility. Some basic data about the Haitian land resource are shown in Table 1.

Table 1. Haitian Land Resource Data

	Hectares
Total land area	2,800,000
Arable land	900,000
Irrigatable land	180,000
Irrigated land	90,000

Initial Steps

We moved to Haiti in April 1981 to study the market and look for Haitian Partners. We asked the Canadian International Development Agency (CIDA) for what they call a "Starter Study" grant and received Canadian US $10,000 for the prefeasibility study. We then requested further funding and received US $23,000 which was used to complete the studies. At the same time we equipped the soil laboratory which was the only one operating in the country. The laboratory was in operation well before the plant – in fact before our company was legally formed.

We found a Haitian partner; a person who had the intention of putting up a plant but had shelved it because he couldn't find an associate technically competent to run it. He had recently become successful in the bulk cooking oil refining business which is similar to fertilizer in that it is a materials handling business with high volumes and low unit profits.

A limited liability corporation was formed, named Agricultural Services S.A. (ASSA), with our Canadian firm and the Haitian associate as equal partners. I was named President. The Haitian side was to handle local financing and political protection of the company, while the Canadian side was to operate the business. You have to bear in mind here that when we came to the country we spoke neither French nor Creole.

Operations

Location

We chose to locate near Port-au-Prince and not on the water or near the principal market for two main reasons. For me the most important of those reasons was that the land was owned by the Haitian associate and he had agreed to construct the building and advantageously lease it to ASSA, thereby cutting in half the capital investment required to start up an enterprise which, after all, had never been tried before in Haiti and was fraught with unknowns. The second reason for locating initially where we did was that it was always seen as a temporary placement from which we would move as soon as we determined that conditions warranted.

Equipment

The fertilizer plant was constructed by us basically by hand. The building pad and the walls were poured with concrete which was manually mixed using shovels and carried in 2-gallon pails. All the steel was formed in house. All in all it took almost 2 years to complete the facility.

The equipment chosen was simple, consisting of a 1-tonne scale hopper, an elevator, a rotary mixer, a storage hopper, and a bagger. Except for the

bagger, all the process equipment was made by Atlanta Utility Works of the United States. I chose an air bagger and we introduced Canadian plastic bags which were much cheaper than the standard woven poly bags. This was my first lesson on how hard it is to get Haitians to accept changes from what they are used to. In this case, however, they were correct as the plastic bags could not withstand the repeated handling of the Haitian marketplace. We eventually changed to woven poly bags, closed with a hand-held sewer and we adapted the bagger to work with these bags. The bulk materials were transferred to the hopper scale by two 3/4-yard capacity Hough-type loaders which were also put into the ship's holds during vessel unloading. As we had not invested in any bulk inloading equipment, bulldozers were used to pile the raw materials after they were dumped inside the plant.

Extensive preventative maintenance was practiced, and consequently, very few equipment problems were encountered during the 4 years of operation.

Considering that we had no crane facilities, and therefore, had to rely on ship's gear, we became very proficient at unloading vessels. Our average vessel size was 3,000 short tons and we usually rented clams and dock space from the local cement company. Occasionally, for one reason or another, we had to unload by hand, and Haiti is probably the only place where that can be done for less than US $2.00/short ton. For these occasions and to clean out the hold, we developed an efficient self-unloading hopper which was much quicker than the single cable clams that had to be lowered into the trucks to release. It was unusual for us not to make dispatch on unloading.

Trucking the raw materials 11 km from the dock to the plant was a constant nightmare requiring employees riding shotgun with the drivers to prevent theft and patrollers on the road to watch the watchers.

Product

When we analyzed the blends being used in Haiti, we found that most of the imports were straight urea which was being used on the rice fields of the Artibonite Valley. Believe it or not the main blended fertilizer imported was 10-5-15, a blend cunningly designed to have the most numbers on the bag with the least fertilizer (nutrients) in the bag. This blend can be formulated with well over 50% filler and its formulation had little to do with the needs of either the soil or the crop upon which it was being used. At that point the Haitian farmer was buying strictly by price. All blends were called "complete" and no distinction was made between blends. Our first job was to educate the farmers – or more specifically first the dealers and then the farmers – to purchase fertilizer by crop nutrient requirements and to buy the highest

appropriate ratio. We never did completely accomplish this but we did manage to move the standard "complete" formulation up to 12-12-20.

Haiti's soils are extremely basic. The underlying strata of most of the agricultural regions contain high levels of calcium. So much so that the standard methods of measuring pH and calcium could not be used and we had to use modified testing techniques which were developed for us in the United States. For this reason we used MAP instead of DAP and encouraged the addition of as much ammonium sulfate in the blends as possible.

Initially we had a great many problems with our filler but we finally found a source of coarse river sand which, with two hand sievings, produced a very cheap and effective filler (because of price considerations, filler is necessary in Haiti).

We tried to custom blend for each major client according to his needs, in quantities as low as 0.5-short ton lots. Micronutrients were included if required. Over time we convinced many farmers of the value of soil testing and custom blending. In fact, because we kept our soil testing laboratory completely independent from the plant's ability to produce, we would occasionally get a case where the laboratory recommended 10-10-20, for example, and we could not convince the farmer to take the 12-12-20 that we had in stock. It was, as a matter of fact, the reputation and loyalty built up with these practices that helped to keep the company going as long as it did when times got tough.

Market Penetration

Market penetration was our greatest concern on starting up. How would we break the stranglehold that the giant Dominican Republic firms had on the Haitian market? We knew that the Haitian importers of product were not serving the market. The retail prices of product in Haiti were unbelievably high. They imported only urea and a few blends and served primarily the biggest rice-growing area. We also knew that consumption was very low at about 8 kg/ha compared to around 50 kg/ha in the Dominican Republic; so we figured that with a combination of aggressive pricing, a good distribution network, a workable credit policy, dealer and consumer education (which meant teaching them the significance of the numbers on the front of the bag), soil testing, and demonstration plots we could increase the amount of fertilizer used to the extent that our increasing market share would not wake up the tiger next door. At the same time we did almost everything possible to acquire the minimal protection provided for by Haitian law–a time-limited protection granted to new industrial firms to allow them to get their feet under them before being exposed to aggressive

foreign competition. Unfortunately, the law had been abused by entrepreneurs who used it to create monopolies, and for this reason plus intense opposition from the importers who did not want to lose a source of supply, we never obtained the needed protection.

Everything went according to plan for the first 3 years. We started selling urea for about one-half the previous price through a Haitian firm that acted as our exclusive distributor. We spoke at hundreds of meetings about the cost savings of high ratio blends; we introduced 50-lb bags early on with some success; we analyzed thousands of soil samples at no cost to the farmer and compiled tables of recommended blends for each crop in each area; and we gave large amounts of credit to our dealers – mostly unsecured because the judicial system in Haiti does not function. For 3 years we had no problems with credit because we were growing. Our dealers always paid for their previous orders when they came for the next, which was invariably larger than the last. We suspected that if we cut anyone off, it might be difficult to collect the last payment, but we wanted to grow and we took the chance.

In mid-1985 we let our distributor go and opened up our own network and the sales really increased (Figure 1). By the end of 1985 our estimates showed that consumption per arable hectare of land had reached 11.4 kg, an increase of approximately 3 kg for each of Haiti's approximately 1 million ha of arable land. Farmers, who were following our "complete program" for rice, including variety selection, soil testing, water management, and timeliness of harvest and fertilizer application, were harvesting 11 short tons/ha instead of 1.5 short tons, the average yield in the area. ASSA presented a weekly radio show and sponsored 150 demonstration plots throughout the country. These were modest accomplishments – but real.

Financing

Apart from the two small grants from CIDA, the plant was built and equipped by the principals. Initially, money was borrowed only for raw materials, and almost all letters of credit were opened from Haiti, although admittedly it wasn't always easy.

Expansion

In 1985 we began to push our expansion plans. We had acquired the best site in the country for our new plant and dock facility, and the studies

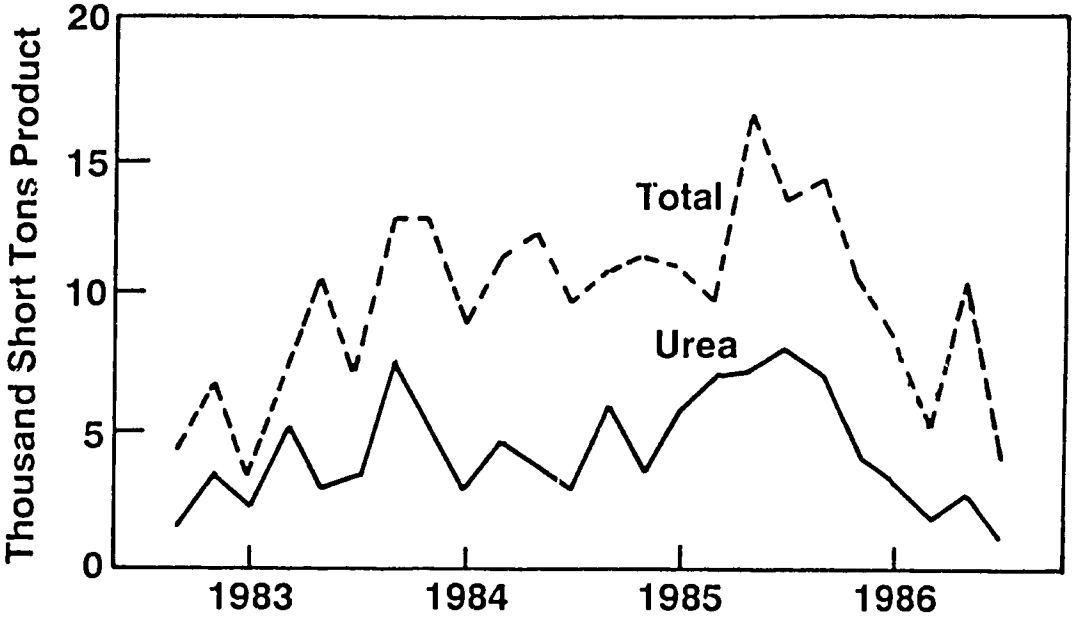

Figure 1. Agricultural Services S.A. – Sales Trends, 1983-86.

were done for their implementation. Again we had managed to get CIDA to bear the cost of the study and the work was done by two reputable organizations – Hatch Associates of Toronto and IFDC. We had designed a plant that was simple and efficient. We were going to be the first to install compaction/granulation capability in the region during the second phase. We were going to be small players in the bagged fertilizer export market. We had our financing virtually assured. We received grants to improve the soil testing service. We had an American partner. We were in good shape.

Collapse

It was about the time we were ready to expand (early 1986) that all our past errors came back home.

When the Duvalier family left in February 1986, Haiti was in revolution and we had just finished the best month of our history. As well, we had just won an order worth one-half million dollars from the local agricultural bank and had imported the necessary raw material to fill it, and in fact, had started delivery. During the riots, this bank's storage facilities were destroyed and

the institution was dealt such a blow that to this day it exists only as a shell and is currently being reorganized. They canceled the order. In the Artibonite Valley, where we had forced out the old importers by installing new dealers who did not feel it was necessary to make US $8/bag profit, several rice fields were sprayed with herbicide by these disgruntled people and the crop damage was blamed on our urea. Our accounts receivable were rapidly getting older. Our Haitian associate fell on hard times and could no longer guarantee our credit. Imported fertilizer mysteriously began to appear in Haiti at a price as much as US $60/short ton lower than it was being sold for where it originated. We were forbidden to export to their higher priced market even with confirmed orders in our pockets. And finally the Japanese chose this moment to give Haiti large quantities of bagged product.

During the next 15 months we lost all the retained earnings in ASSA and defaulted on our major loan which, lucky for us, was held by the agricultural bank that canceled the big order. In May 1987 ASSA ceased operations and in July the Canadian side sold to the Haitian associate. The plant never resumed operation.

What Went Wrong

1. We were too highly leveraged. Although we reinvested later on, our debt equity ratio at the height of our sales was 11:1 and most of the debt was current. Interest became one of our biggest expenses.
2. We did not have control of the big distributors. For the most part they did not trust us. We had not included them in our original plans and these were powerful people in their areas. We had not been consistent in our dealings with them and we did not allow them to make the profits they were accustomed to. If they charged too much we would install another dealer in the area. They became our enemies.
3. We gave too much credit. Credit is a two-edged sword. Nothing increases sales faster but there is no assurance that earnings will follow. When our customers saw that we were weak they delayed payments, using the excuse that our product burned their crops. I remember one day when 8 hours of collections in the field netted US $8. When we tried legal proceedings against those dealers on whom we held papers, we were threatened with machetes, and we had seen first hand what machetes can do to people in the Artibonite Valley.
4. We had very little standing with the Haitian Government. We had upset the Department of Agriculture by our policy of honest dealing to such an extent that they became proponents of imported fertilizer. They worked against us when we attempted to have the Japanese product imported in bulk for the local production (blending) of more useful and cheaper formulations. I remember bothering the Japanese Chargé

d'Affaires about it so much that finally he told me that the Government was specifically requesting the product in bags and that I should be talking to them, not him.

5. Our costs were high. This is reasonable at the beginning of a business perhaps, but when the competition got fierce, our US $14/short ton cost to unload a vessel and transport material to the plant became prohibitive.
6. Basically, we underestimated the competition. They did not want to lose business and this was normal. They fought with the means at hand when they were threatened and this, too, is normal.

I want to say at this point that total market size was not a reason for the demise of ASSA.

In our part of the world, business rewards exploitation of sales only. That is to say, it is difficult to build market share on good service and better product. Price is everything. Neither the government, the dealers, nor the farmers can see that a lower price in the short term may cost them much more in the future in terms of availability and choice, as well as price, and that in the longer term overall service and quality can suffer as a result. I don't blame the farmers for this – they have enough to think about without worrying about economic theory. It is the leaders of the nation who should have the wisdom to decide whether their country needs to develop certain basic capabilities for the benefit in the long term, even at an expense in the short term. I am not making an argument for protection – it didn't work in Haiti even when granted – rather an argument for enlightened self-interest within a country. But Haiti has made its de facto decisions regarding business standards and regulations abundantly clear to anyone willing to see them. For so long the people have been exploited by their own – sold poor products at high prices, with no long-term commitments – that they do not take a long view of anything. There are many examples of short planning horizons in Haiti that from their point of view are quite justified. I'll give you two that I witnessed.

The agricultural bank previously mentioned used to sell fertilizer on credit to farmers with payment and interest due in 3 months when the crop came in. They were selling the product through a governmental organization that held title to the land so there was no way not to pay back the loan. Many of these farmers would buy this fertilizer from the bank at US $10/bag and immediately resell it for US $8/bag to get the cash that they desperately needed. Three months is a long time; I could be dead by then. Of course, many of them reloaned the newly acquired cash at interest rates of 10% per day, paid back the bank, and had money in their pockets.

Another example follows. From time to time I would have a good employee quit for no apparent reason. It would turn out that he needed cash badly and let his job go just to collect the severance pay, regardless of the fact that he would no longer have a job. We set up an emergency lending fund but that wasn't addressing the real reason for the quitting. The workers could not live with the fact that there was money on account for them to which they did not have immediate access. The thought that the company might go bankrupt or the boss might run off with the money before they got it was so frightening to them that they would risk their jobs to get it out first.

These are examples of day-to-day living and it is the way that very poor countries operate. Anyone doing business in Haiti must take this into account.

Conclusions

I can say that the situation in Haiti, then and now, does not lend itself to foreign-run big business with products destined for the local market. This seems to be a true statement because to my knowledge there are none. But the main reasons for our failure were internal. More realistic planning and a less arrogant attitude toward the realities of the marketplace, plus more equity financing, would have made a big difference to the fortunes of ASSA.

There have been some lasting effects of ASSA's efforts – mainly in price. The old high margins have not come back. Also the push towards higher analysis blends is continuing. You could say that the awareness of fertilizer has increased.

Haiti needs, and can support, a fertilizer bulk-blending plant to serve its hard-pressed farmers. The importation of bagged product is a short-term solution that will become problematic as hard currency becomes ever more difficult to find. Our experience should be looked upon by the next player as a useful experiment, and he should profit from our mistakes in the planning, financing, and operation of Haiti's next bulk-blending facility.

Production and Marketing of Compacted NPKs in Switzerland: Rationale and Results

Dr. A. Sutter, Production Manager, Chemische Fabrik Uetikon (CFU) – Switzerland

Introduction

Ladies and Gentlemen, I want to thank IFDC for the invitation to speak at this workshop. I was asked to report on various aspects of our 18 years of experience in fertilizer compaction. At the beginning I would like to say some words about the development of fertilizer production in our company. What we have today is the result of decades of development. On one hand, it is gratifying to report on the results of such developments – so not everybody must start again from scratch – but, on the other hand, it is also dangerous to transfer know-how if the reasons for particular solutions are not clearly described. The latter is the reason for seminars like the one we are now attending.

Development of Fertilizer Production in CFU

The development of fertilizer production in our company (CFU) is shown below.

1883 – Production of superphosphates was started at CFU more than 100 years ago. The prime reason was to boost use of sulfuric acid. Shortly thereafter, mixed fertilizers were added to the program.

1938 – First tests were carried out with wet granulation because requirements of the farmer in regard to easier application increased and the appropriate technology was available.

1971 – Stepwise conversion of the plant to a compaction process was begun. The conversion was made in steps because, at that time, we were not yet able to compact all mixed fertilizer formulations. This stage was finally reached in 1978.

1987 – The bagging operation was changed over from hand bagging to a fully automated bagging and palletizing system. This step was taken because personnel were no longer available for hard work and the bagging quality had to be improved.

Changeover From Wet Granulation to Compaction

This move became necessary because important raw materials, DAP and urea, could not be processed in the old granulation plant. Since these raw materials were economically priced, a method for the granulation of mixed fertilizers with high nutrient content based on DAP and urea had to be found. Of course, other considerations were also involved in the choice of dry granulation by compaction. Some of the other major considerations are summarized in the following paragraphs.

Advantages of Compaction Over Wet (Slurry) Granulation

	Advantage	Comments
1.	The compaction process is suited for relatively small production capacities.	Slurry-type granulation is only economical in large systems.
2.	No environmental concerns are encountered (air or water).	Pollution control is quite expensive in slurry-type granulation plants.
3.	The product has very low caking characteristics.	Great problems occur with wet granulation if drying is not complete.
4.	Compaction/granulation has great flexibility in regard to the use of different raw materials and change-over to different formulations.	Flexibility is important if many different types of mixed fertilizers must be made. Changing grades in a wet-type granulation plant requires considerable time.

5.	The compaction process conserves energy.	Because this was really not considered at the time of the change-over, no data are available. However lower energy consumption can be assumed with compaction.

Of course, compaction not only offers advantages over wet granulation, but some disadvantages also exist. They are mostly due to the production of irregular (split and crushed) particles as compared with more or less spherical granules produced during wet granulation. Some of the disadvantages of the particle shape of compacted products are summarized as follows.

1. Higher abrasion, therefore more fines and dust in the fertilizer.
2. Somewhat reduced flowability.
3. "Rougher feel" in case of application by hand.
4. Uncommon appeal; possible problems with acceptance by the farmer.

Eighteen years ago these disadvantages were not so obvious as they have become today. Some efforts had to be made to reduce the importance of these disadvantages. For example, product is now being rescreened and an antidusting agent is applied. On the other hand, some of the seemingly existing disadvantages could probably be eliminated by intensive discussions with the user. After all, perfect solutions cost money and are ultimately paid for by the farmer.

The Compaction Plant of CFU

Figure 1 shows the flowsheet of our plant. This schematic diagram will be briefly explained and detailed information will be given about each individual piece of equipment within the plant and its importance. Also, some special characteristics of our plant will be explained. While all this is being done, possibilities for improvements will also be pointed out.

The heart of the plant is the roll press with a capacity of approximately 18 tph, including recycle, or about 10 tph of product. All other plant equipment is sized to match this capacity. The system is operated by two people. One supplies the fresh feed materials by front-end loader (1) from a nearby storage facility (Figure 1). It is this person's duty to carefully meter each component into the weigh hopper (2) according to the formulation to be processed. The second person controls the entire plant and optimizes the performance of each piece of equipment. Normally the plant is interlocked

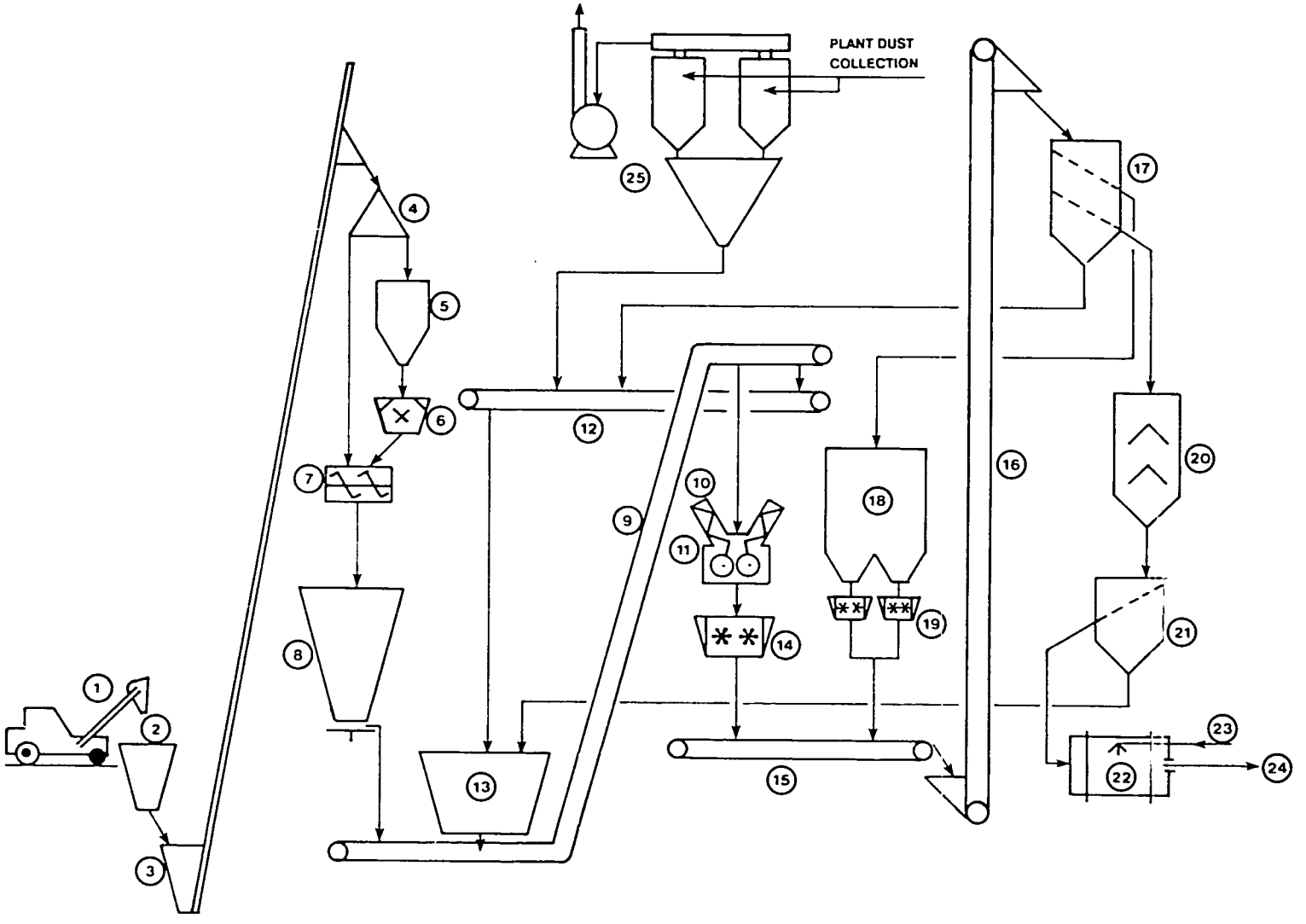

Figure 1. Flowsheet of the CFU Fertilizer Compaction/Granulation Plant.

so that if one piece of equipment fails the entire plant will shut down. However, it is also possible to operate each piece of equipment manually and independently which is important when testing new formulations.

From the weigh hopper (2) the raw materials are transferred into a skip hoist (3) which raises them to a diverter gate (4). By means of this diverter gate, it is possible to send the raw materials into a surge bin (5) and finally into an impact mill (6). Discharge from the impact mill goes to a mixer (7). It is also possible to shift the diverter gate so that material leaving the skip hoist (3) is sent directly to the mixer (7).

After the mixer the material is stored in a silo (8) from which the appropriate amount is discharged by a rotating disk into a drag conveyor (9) and fed by feed screws (10) into the roll press (11). In order to keep the feed screws fully loaded, a slight excess of material is added to the drag conveyor (9). This excess is transferred to another drag conveyor (12) which carries it to the surge bin (13). From this surge bin it is returned to the roll press.

Sufficient capacity of silo (8) makes it possible to operate the compaction part of the plant on a continuous basis while the front end (formulating section) of the plant is being operated on a batch basis.

In the roll press (11) the raw materials are compacted into a solid sheet which is sent to a flake breaker (14) where it is broken into pieces that can be easily handled. By means of another drag conveyor (15) the broken material is transferred to a bucket elevator (16) which raises it to a double-deck screen (17). Undersize particles (recycle) are sent to the surge bin (13) and later returned to the roll press. Oversize material is transferred to a silo (18). These large particles are recrushed in a secondary crusher (19) and returned to the double-deck screen (17) by way of the drag conveyor (15) and the bucket elevator (16).

Product size material is first stored in a curing bin (20) and then rescreened on a single-deck screen (21) to remove any fines before being transferred to a rotating drum (22) where it is treated with a de-dusting agent (23). From the drum the conditioned product is transported to bagging and palletizing (24).

Dust from the dust-collecting system (25) is returned to the roll press via the surge bin (13) and the drag conveyor (9).

Detailed Description of the Equipment and Explanation of Special Plant Characteristics

Raw Material Feed System

A first speciality of our plant is the feeding of raw materials by front-end loader and the individual weighing of each component by the operator of the machine; i.e., there is no automatic batching. The reasons for this design are that 20 years ago, when the investment decision was made, it was felt that the cost of automatic batching was prohibitively high for the envisaged plant capacity. We might have a different opinion if, today, a new plant were being designed. Of course, we do maintain good control of the formulation by recording the result of each individual weighing step.

A large number of different raw materials are used in the plant to produce a multitude of formulations.

We feel that it is important to be able to crush some of the feed materials while sending others directly to the mixer. This is due to the fact that some raw materials must be reduced in size while others (e.g., superphosphate) should not or cannot be crushed. In any case, it is desirable to obtain the best compactible feed to the roll press. Therefore, from the point of view of economics, it is important to crush as much feed as necessary, but avoid as much unnecessary crushing as possible. The roll press feed should contain a high percentage of particles between 0.1 and 1.0 mm in size and not too much dust.

The Compaction Machine (Roll Press)

As already mentioned, the roll press is the heart of the entire plant. The sufficient and continuous feeding of the press with material is an important function of plant operation. Good compacted sheet is produced only if the roll press never experiences starved feed conditions. Sufficient feeding is guaranteed by supplying an excess of material to the drag conveyor (9) to ensure that a small (trickle) overflow passes on to the conveyor (12) from which it is returned to silo (13). This ensures that the roll press feed screws are always full.

Furthermore, it is important to maintain a uniform composition of the materials fed to the roll press (fresh material, recycle, and dust from the dust collection system) because the compactibility of each component may be quite different. At CFU we do not have a mixer to homogenize the blend of these materials because we feel that the mixing action of the drag conveyors and the feed screws is sufficient. It is important, however, that the

components, particularly the dust, are metered continuously and uniformly into the material flow system.

The feed screws play an important role in feeding the roll press. They force material into the nip between the rolls and thereby cause a certain amount of predensification (removal of air). Experience has taught that operation of the feed screws is critical especially if smooth-surfaced rollers are used.

Increasing the feed pressure to improve compaction may result in the opposite. Additional heat caused by friction may, for example, melt urea which further reduces the grip of the rolls on the material. The introduction of "waffle" surfaced rolls remarkably improved the ability of the rolls to pull material into the nip. A good grip of the rolls on the material is of utmost importance for enabling a press to produce good, dense sheets across the entire width of the rollers.

Particle Size

The influence of particle size on compactibility has already been mentioned in connection with discussion of the impact mill. Too much dust may produce problems caused by entrapped air that must be removed during the compaction process.

Moisture Content

Another important parameter is moisture content. To reduce the tendency to cake, it is always preferable to have the smallest possible moisture content. However, often, a small amount of moisture in the feed improves its compactibility. This benefit may be obtained with moisture contents as low as 0.2% for many raw materials, particularly if relatively large amounts of dust are present. Such a low moisture content does not result in increased caking. Moisture can be added by use of moist raw materials or by spraying water into the mixer. Moisture may also cause problems with feed materials exhibiting extreme hygroscopic or thixotropic characteristics (the case with urea and superphosphate). By varying the relative amounts of these materials (urea or superphosphate) in the mixture, surprising and often favorable results can be obtained.

Raw Material Storage

In this context it should be mentioned that different relative humidities in the storage area can already warrant modified operating conditions. Therefore, it is most important to protect hygroscopic materials from high humidity. Hygroscopic raw material may not only cause problems during compaction but, alone or in combination with other fertilizer components, such materials sometime cause extreme corrosion problems. For that reason,

the CFU compaction plant is located in a closed, heated room in which the relative humidity is kept below 60%. Under these conditions corrosion remains within acceptable limits. The possibility of air conditioning is particularly desirable at times when the plant is shut down.

Product Curing and Hardening

Coming back to compaction, depending on the composition of the fertilizer, the sheet leaving the roll press may be instantaneously hard and strong or it may be relatively soft. However, after some widely differing periods of time, curing (hardening) takes place. Among the 30 formulations produced at CFU some exhibit below standard particle strength. Nevertheless, they are produced if the compacted granular product offers agronomic advantages.

The plant must not produce products that are merely easy to manufacture but those that the farmer needs and make sense agronomically. Even if a product's quality does not meet the ideal requirements, the best possible granular fertilizer is made from the particular raw materials available. Intensive consultation with the farmer helps to support the supply of such products.

Plant Capacity Factors

The net capacity (product) of a compaction/granulation plant depends on the following three important plant components.

Plant Component	Criteria
1. Roll press	Amount and quality of sheet leaving the press
2. Crusher	Type of crushing mechanism and yield, i.e., ratio of product-to-recycle
3. Screen	Range of particle size distribution and efficiency of screening

A discussion of these factors follows.

Roll Press

The amount and quality of the compacted sheet are related to each other. Thin sheets have a higher quality than thick sheets, because a higher average pressure is exerted throughout the cross section of the thin sheet than on the thick sheet. The interior of a thick sheet is not pressed as firmly as the surface. This means that high capacity due to thick sheets does not necessarily result in high net capacity because the amount of recycle may be disproportionately high. Normally, we prefer to operate with relatively thin sheets; the product quality is better and the total system, particularly the crushers and screens, is less loaded.

Crushers

In the CFU plant crushing takes place in differently sized disk-type roller mills. The use of another crushing mechanism (for example, an impact mill) is out of the question for the generally soft sheets. The flake breaker and secondary mills feature differences in disk diameter, spacer thickness, and gap between the rollers.

Evaluation of Crushing Efficiency—For the evaluation of breaker (crusher) performance the following criteria can be used:

- Ratio of product to recycle (yield)
- Oversize reduction (secondary crushing)

These two values are determined by screen analyses before and after the material passes through the crusher. An example of typical crushing efficiency data follows.

Particle size, mm	0-2 (recycle)	2-5 (product)	>5 (oversize)
Percentage			
▪ before crusher	3	15	82
▪ after crusher	23	39	38
▪ Difference	20	24	44

$$\frac{\text{Product}}{\text{Recycle}} = \frac{P}{R} = \frac{24}{20} = 1.2$$

$$\text{Oversize reduction} = OR = \frac{44}{82} \times 100 = 54\%$$

Evaluation criteria:

Value		
P/R	OR (%)	Evaluation
<0.8	<40	bad
0.8	40	unacceptable
1.0	50	acceptable
1.2	60	good
>1.2	>60	very good

Both values should be as high as practical. As much product as possible must be made with as little fines (recycle) as feasible, and secondary crushing must be efficient to avoid overloading of the internal loop. This goal is best reached if the secondary breaker design is adapted to produce product-size particles. A finer product (for example, 1.5-3.5 mm which corresponds to CFU's lawn and garden fertilizer) requires a smaller spacing within the breaker than a coarser one (for example, 2-5 mm).

Optimization of sheet crushing is very important but also very demanding. After many years of experience, we at CFU still see possibilities for improvement which, unfortunately, are not always financially feasible in our old plant. In case of a new plant, the following items should be considered:

- Possibility of curing the product before it is crushed.
- Installation of extra capacity (oversized) crushers to avoid overloading.
- Crusher dimensions must be compatible with the feed size.

Screening

CFU uses a Rhewum high capacity vibrating screen with a slope of the screen deck (adjustable) of approximately 36°. The double-deck screen is relatively easy to clean and maintain. During operation cleaning is accomplished automatically by variable frequency vibration. Particles which are stuck in the meshes of the screen are removed. Nevertheless, depending on the type of fertilizer, more or less frequent manual cleaning of the screen cloth is also necessary. A thin coating of fertilizer builds up around the screen wires reducing the size of the mesh openings. This buildup cannot be removed by vibration. Crust formation shifts the product particle size distribution towards a finer range. If the wires of a screen with 5-mm mesh openings are coated with 2/10 of a millimeter, the open area is reduced by 15% and particles in the size range between 4.6 and 5.0 mm no longer pass

through. The same crust formation on a 2-mm screen reduces the open area by 36% and the final product becomes much finer.

While a reduction in yield can be temporarily tolerated if the upper particle size is shifted towards a somewhat smaller dimension, the increase of finer particles and dust in the product is not acceptable. For that reason, CFU has introduced the practice of rescreening.

Particle Rounding and Dedusting

Shortly after starting up our plant, we found that particular attention must be given to the improvement of particle shape. The irregular (crushed) particles had some disadvantages when compared with round granules normally produced with slurry (wet) granulation. At the same time, market requirements became more stringent. The most important requirements were directed towards particle rounding and dedusting.

Particle Rounding–On the basis of extensive testing, a mechanial rounding of the crushed material does not seem to be feasible; to produce round particles by attrition, a large and expensive rotating drum with long retention time is required. If the crushed particles are hard, extremely fine dust is produced by abrasion. If they are softer, fertilizer crystals and individual material components are broken off thus producing weak spots in the granule and this results in massive degradation. The latter particularly occurs if the raw materials are not finely ground prior to compaction.

In one test five persons who handled different fertilizers after the products had been tumbled in the rotating drum for 10 minutes did not report any significant differences in texture or behavior between untreated and treated material. Loosely attached particles are more easily removed by rescreening.

Dedusting of the Crushed Particles–Because the granular fertilizer is being produced by crushing, each particle is more or less covered with dust. In a test employing a centrifugal fertilizer spreader, it was found that dusting during spreading of the fertilizer is better suppressed by applying dedusting agents, which prevent new growth of dust, than by air-dedusting the granules during production. Therefore, during the past years, our aim was directed towards the use of most effective dedusting (dust suppressant) agents. Such materials are normally composed of complex mixtures of waxes and oils. Good dedusting agents do not penetrate into the fertilizer particles but coat the surface and, therefore, are effective over long periods of time. This is particularly true for agents containing relatively large amounts of wax. Since uniform application of such agents onto the surface of the fertilizer is

difficult, the efforts of CFU are directed towards continually improving the treatment method.

Plant Investment and Production Costs

Investment Cost

Investment costs are primarily influenced by the extent of equipment installed to obtain higher than normal product quality and automation. We estimate that, to build a new plant from front-end loader to 10 tph product, ready to be bagged but without a building, an investment of approximately US $3.5 million (1 US $ = 1.65 Swiss francs) is necessary. This estimate is based on the assumptions shown in Table 1.

Table 1. Estimated 1989 Investment Costs for a 10-tph Plant (Product)

▪ Cost of the plant in 1971	US $ 910,000
▪ Improvements and additions made since 1971	1,400,000
▪ 30% inflation factor (approximate)	690,000
▪ Improvements not yet made in CFU's plant (e.g., automatic batching)	500,000
TOTAL (1989)	US $3,500,000

If procurement is limited to the essential plant components, a less sophisticated plant can be built; such a system would still be able to produce acceptable granular fertilizer at a lower cost.

Production Cost

At CFU the total production cost per year (not including raw materials) amounts to approximately US $620,000. The distribution of this total cost is shown in Table 2.

In case of a new plant, operating costs are higher because the higher interest and amortization figures can only be partially offset by lower costs of maintenance and labor. We estimate an annual production cost of approximately US $810,000 (not including raw materials); the percentages can be assigned as shown in Table 2.

Table 2. Distribution of Production Costs for a 10-tph Plant (Product)

	Existing Plant[a]	New Plant[b]
	------ (% of total annual cost)- -----	
Interest	6.6	13.0
Amortization	20.3	43.2
Labor (operation)	34.9	24.7
Maintenance Materials	10.6	4.3
Maintenance Labor	17.6	6.8
Electricity	8.4	6.8
Steam/Oil	1.6	1.2
Total	100.0	100.0

a. Interest and amortization are based on a book value of US $900,000.
b. Based on a new plant cost of US $3.5 million. Interest equivalent to 6% of 50% of investment. Amortization based on 10% of investment.

Of course, it would make sense to compare these costs with other expenditures for production of multicomponent (NPK) granular fertilizers. It must be realized, however, that the actual raw material prices, the nutrient content of the fertilizer, the annual capacity, and other factors play an important role. An example of the typical CFU cost distribution is shown in Table 3.

At CFU, the relatively high costs for administration and advertising are due to the great competitiveness of the market. The costs are also high because of the intensive services we render the user which, in today's environment, are necessary for economic and ecologic reasons. Since, in Switzerland, farm sizes are small (Table 4), the cost for consultations compared with the amount of fertilizer used is high. With this structure of medium- to small-size farming, fertilizer sales are mostly handled by agricultural cooperatives and private dealers. There are no direct sales from the manufacturer to the farmer.

Table 3. Distribution of Total Cost of Fertilizer Production at CFU

Cost Component	% of Total
▪ Fertilizer raw materials	60
▪ Production costs	6
▪ Bagging (material & labor)	7
▪ Administration and advertising	8
▪ Other (storage, laboratory, and overhead)	19
Total	100

Table 4. Structure of Farming in Switzerland

Type of Farming Operation	Number of Farms
Full-time farming – Average farm size of 15.4 ha	70,000
Part-time farming – Average farm size of 2.0 ha	50,000
Total	120,000

Raw Materials and Products

Because of the economic and ecologic requirements for today's fertilizers and the conditions imposed on their use, the number of different raw materials used is large as shown in Table 5.

Nitrates, an important nitrogen source, are missing in this summary. For safety reasons we are not using any nitrates in the compaction process. In case of a need for nitrates as a component in mixed fertilizers, we are employing bulk blending for manufacturing these products.

Through the years we were repeatedly confronted with the problem of compacting organic waste materials, either alone or together with mineral

Table 5. Raw Materials Used in Compaction/Granulation of Fertilizers at CFU

Nitrogen	Potassium
Ammonium sulfate	Raw potash
Urea	KCl – 40 % K_2O
Urea derivatives	KCl – 60 % K_2O
	Potassium sulfate – 50% K_2O
	Patentkali 30.7®
	Kieserite
Phosphates	Calcined magnesium sulfate
DAP	Dolomite
MAP	Limestone
TSP	
Superphosphate (SSP)	**Others**
Phosphate Rock	Sodium chloride
	Borax
	Calcium borate
	Organic waste materials
	Trace elements (for example, sulfates of Fe, Cu, Mn, and Zn)
	Fillers (Bentonite and sand)

fertilizers. It is our experience that roll presses are not very well suited for this task. Such materials are better handled with pelletizing machines. It should be mentioned also that the importance of this segment of the fertilizer market is not high, because of the low nutrient content of such organic wastes as compared with mineral fertilizers.

CFU's Fertilizer Manufacturing Program/Product (Market) Requirements

As mentioned earlier, CFU manufactures a large number of fertilizer products which are formulated to meet the requirements of the soil, the farm, and the crop. In total, more than 30 different products are being made. They are basic PK-fertilizers and formulations with high nitrogen content as well

as special grades for different crops (for example, wheat, potatoes, beans, corn, and rape seed). A listing of CFU's fertilizer manufacturing program (products) is shown in Table 6.

The reasons for the multitude of fertilizer formulations shown in Table 6 include the following:

1. Based on soil analysis and farming method, different nutrient ratios and contents are required.

2. Nitrogen must be supplied when needed and, if possible, in steps. Because of nitrogen losses and to avoid the contamination of groundwater with nitrates, this requirement has become particularly important.

3. Different crops have various needs for boron and other trace elements.

4. Some crops are sensitive to chlorine; therefore, some formulations must be chlorine free.

5. Some crops need sulfur, for example, rape seed.

6. For some soils fertilizers should be combined with soil conditioners, for example, our MONTISAN product which contains 16% calcium for acidic soils.

7. Finally, the farmer requests the most cost effective NPK fertilizer in relation to unit weight or nutrient content.

Today, not only the large farmers with acreages of 40 ha or more but all of them are being trained and required to fertilize with just the right amount of nutrients. The general rules for "just the right amount of fertilizer" are shown below.

1. Nutrient consumption by the crop. Agronomic test stations are providing standards.

2. These standards need to be adjusted according to the soil analysis.

3. From the adjusted standards the following inputs must be subtracted:
   - Nutrients supplied by on-farm fertilizers (solid and fluid manure)
   - Nutrients supplied by waste fertilizer materials (municipal waste)
   - Nutrients supplied by crop residues after harvest

4. The value resulting from this exercise defines the nutrient content which must be supplied by mineral fertilizers.

Table 6. CFU's 1989 Mixed Fertilizer Program

	Nutrient Content						
	N	P_2O_5	K_2O	Mg	B	Cl-free	Other
	(%)						
Foskal 1	-	15	30	2			
Foskal 2	-	20	20	2			
Foskal 3	-	11	33	2			
Foskal 7-35.	-	7	35	4			
Ammonfoskal	-	6	12	18			
Ammonfoskal 1	-	8	20	30			
Ammonfoskal 2	7	5	30	2			
Ammonfoskal 3	8	8	20	2			
NPK Uetikon	13	13	26				
Epidor	13	13	26	1.5			
Montisan	5	5	15	2			16 Ca
Patador	10	8	24	2	0.05	50	
Carodor	8	10	30	2	0.3		0.2 Mn
Colzador 1	5	15	25	2	0.3		5 S
Colzador 2	-	15	25	2	0.3		5 S
Colzador 3	8	16	18	2	0.3		6 S
Zeador 1	14	8	24	2.5	0.1		
Zeador 2	5	10	26	2.5	0.1		
Mulkafos	-	12	20	3	0.3		
Mulkafos N	6	12	20	3	0.3	50	
Mulkafos N without B	6	12	20	3		50	
Mulkafos S	12	10	20	3	0.3	100	
Vitafos	-	10	20	3		100	
Vitafos N	5	10	20	3		100	
Vinosan	10	10	20	3		100	
Suplesan 1	20	8	8	2			2 each Na, Mn, and Cu
Suplesan 2	15	8	8	3	0.3		
Suplesan 3	10	5	10	5		100	
Promosan	25	8	6				
Agrisol	12	6	18	2	0.1	100	Includes Mn, Cu, Mo, and Z
Fumdor	12	6	22		0.1	100	Contains NO_3-N

Among the multitude of fertilizers in the CFU manufacturing program, normally an acceptable formulation can be found. If not, CFU is willing to produce special formulations if at least 50 tonnes of a single type of fertilizer is ordered. The foremost goal is customer service and satisfaction.

Acceptance of Compacted Fertilizers

Acceptance of the compacted (irregular) fertilizer granules was not considered a problem 20 years ago. At that time, the switch to compaction was necessary for other reasons as previously described.

During subsequent years, certain difficulties evolved. At first, the competition used the alleged negative characteristics of the compacted product to promote their round product particles and discredit compacted fertilizers. In the meantime, farmers have become used to the product shape so that good compacted fertilizers with narrow particle size distribution and little dusting (after treatment with appropriate dedusting reagents) are readily accepted if the price is right. Price advantages are normally more important than particle appearance.

Granular fertilizers are normally distributed in the field with a centrifugal spreader. When crushed (compacted) products first became available, they were investigated and compared with products that contained rounder particles. It was found that, if the particle size distribution is narrow (2-5 mm) and the spreader is adjusted correctly, compacted fertilizers distribute as well, and with the same coefficient of variation, as rounded granular particles. Because the flowability is slightly reduced, the feed opening on the spreader must be adjusted to a somewhat larger cross section to achieve the same rate of application.

CFU has no experience relating to the accuracy of spreading bulk-blended fertilizers. However, it can be assumed that, if each component features identical particle size distribution and the specific mass of all particles is essentially the same, good distribution can be obtained. However, those preconditions are not always fulfilled.

The reasons why bulk blending is not being used in Switzerland follow:

1. Farmers may not accept the product because its lack of homogeneity is easily visible. There is widespread belief that the correct ratio of nutrients in each particle is important.

2. Mixed fertilizer manufacturers must be concerned about the possible lack of availability and the higher price of fertilizer components that are needed for producing good quality bulk blends.

3. Because of the large number of different formulations presently being made by compaction at CFU, there is little incentive to switch to bulk blending. This situation may be different if a new plant with large capacity and less ability to produce a large number of formulations was required.

Nevertheless, CFU will continue to evaluate bulk-blending processes in order to be ready if this technology must be used for specific applications. These investigations are directed mostly towards determining the availability of new materials with improved particle quality.

Recommendations for Installation of a New Fertilizer Compaction/Granulation Plant

As requested by the organizers of this seminar, I will close with some remarks which may be important for the installation of a new compaction plant.

1. All items presented and discussed above are valid.

2. The quality as well as possible variations in the quality of the raw materials to be compacted must be known. If no experience exists and/or the compactibility and product quality are unknown, extensive tests are recommended. Because of the influence of quantity and temperature of the recycle on compaction and product yield, a continuous operation, even during the testing phase, is preferable. The temperature of the raw materials must also be considered (winter/summer).

3. It is important to note that compaction/granulation requires extensive practical know-how.

4. Depending on the type of raw materials and climatic conditions, the hygroscopicity of certain fertilizers becomes an important issue in regard to:

- Storage and compaction of the raw materials.
- Storage of the product.
- Corrosion problems in the plant.

5. For various reasons a plant may have to be built that is less than ideal. Then, the following considerations should prevail:

- It is better to install less, but good equipment and facilities.
- Expansion possibilities should be included in the initial design.

In 1971, CFU started with a relatively simple plant. Since then, various improvements were made with considerable expenditures. Today, still further expansion plans are envisaged. Why did this work not take place earlier? Experience and/or money were not available!

Today, after 18 years, the heart of the plant, the KOPPERN roll press, is still in good condition and operating well. Only the wear parts had to be exchanged. Every year a planned maintenance period of 4 weeks takes place. As necessary, representatives of the manufacturers participate. It is most important to keep the plant in good repair to guarantee the availability of the plant during the peak season for fertilizer production and sales. During that period of time, the plant must operate for 4 months in a 3-shift-per-day, 6-day-per-week mode. Any disruptions of operation are most unwelcome.

6. An important consideration for the continuity of plant operation is the procurement and availability of spare parts. To guarantee timely service, a good relationship with the suppliers of the equipment is mandatory. It is prudent to also determine in advance potential remedies which would be available if a major break-down should occur.

7. The extent of automation may vary within wide limits. Which level should be used, depends on the availability of funds but also on the number as well as background and training of personnel available for operation and maintenance. For example, it can be assumed that the manpower situation in Guatemala is quite different from that in Switzerland. The lack of personnel in Switzerland requires, for instance, that the same man must have the technical knowledge needed to operate a relatively complex plant and, in case of difficulties, be willing to do heavy and dirty manual work.

In a highly automated plant it is also necessary to have trained technicians available for the maintenance of electronic equipment and to secure quick and reliable service from the manufacturer.

8. In conclusion, I would like to briefly tell you how CFU went about evaluating compaction 20 years ago. As you have seen, it is most important to put planning and construction of a fertilizer compaction/ granulation plant into the hands of an experienced company.

CFU started the evaluation by carrying out tests with different fertilizer raw materials in the laboratory of KOPPERN in West Germany. After more or less successful trials a small, simple pilot plant was installed at the CFU site to produce several tonnes of compacted, granular fertilizer for storage tests. Only after an extensive evaluation of the questions regarding product quality and the projected performance of the system was the production plant built. Since then, all maintenance and improvements have been carried out in close cooperation with KOPPERN. The knowledge that, after 18 years, the same roll press is still in good operating condition and working well would have been a great comfort to us 20 years ago.

Fertilizer Blending in Ireland – Potential Application of Its Unique Features to Developing Country Locations

J. E. Leonard and T. M. Young, Grassland Fertilizers Limited – Ireland[1]

Introduction

Fertilizer blending had its origin in the United States during the 1940s. By a fortunate combination of technical innovations, distribution, and marketing, an economic and effective system of fertilizer production and distribution has evolved and today blended fertilizers are firmly established as the U. S. fertilizer industry's major marketing medium.

Fertilizer blending is gaining popularity in countries outside the United States. The reasons that contribute to its development differ from country to country and the methods of production and distribution must often be adapted to suit traditional requirements of the particular market or region.

In the United States, the business of fertilizer blending and bulk distribution to the farm evolved primarily from the need to provide a high level of customer service. Blending in Ireland, however, developed from a different base and for different reasons. Instead of creating their own particular technique of marketing, the Irish producers adapted their methods to the traditional marketing system and channels of distribution. In the Irish system fertilizer moves from the producer/blender, through the retailer (merchant or cooperative) to the farmer, not in bulk, but in 50-kg sealed plastic bags which are palletized in 2-tonne unit loads and covered with a shrinkwrapped plastic hood for long-term storage out-of-doors. Approximately 80% of all mixed fertilizers in Ireland are blended and bagged in plants having an annual throughput of up to 250,000 tonnes. Because of the unique development of outside storage for the finished products, bulk storage capacity for the raw materials averages 20% and, in some instances, is as little as 10% of total annual production. Thus, between 5 and 10 turnovers through the bulk store per year are required.

This paper traces the development of fertilizer blending in the Republic of Ireland and outlines those features which have contributed to its acceptance as a proven marketing technique in the Irish agricultural sector.

1. J. E. Leonard, Managing Director, and T. M. Young, Group Production Manager.

It is hoped that the subsequent discussion will propagate ideas and suggestions with regard to the practical application of some of these features in other countries, particularly those where a fertilizer distribution network is in the course of development.

Agriculture in the Irish Economy

Located on the western extremity of Europe, Ireland enjoys a temperate climate with high rainfall throughout the year and the soil is generally good.

Population

The population is 3.6 million (1986) of which 16% of the active workforce is employed in agriculture.

Gross Agricultural Output

The gross agricultural output which amounts to 11% of GNP is valued at approximately US $4.3 billion. Livestock and livestock products account for 88% (mainly milk, dairy products, and beef); cultivated crops account for the remainder (Table 1).

Table 1. Agricultural Output in the Republic of Ireland (1988)

	Million U.S. Dollars	Percent of Total
Livestock and Livestock Products		
Milk and dairy products	1,515	35
Cattle and beef	1,646	38
Pigs	193	5
Sheep and lambs	190	5
Other	222	5
Subtotal	3,766	88
Crops		
Cereals (wheat and barley)	227	5
Sugar beets	73	2
Potatoes	52	1
Other	179	4
Subtotal	531	12
Total Gross Agricultural Output	4,297	100

Land

The land area is 6.89 million ha (17 million acres). Land utilization is 5.71 million ha (14 million acres), of which pasture accounts for 51%; hay and silage (for winter feed) for 22%; and cultivated crops (mainly barley, wheat, sugar beets, and potatoes) for 9%. The remainder is used for rough grazing and forestry (Table 2).

Table 2. Land Use in the Republic of Ireland (1988)

	Million Hectares
Total land area	6.89
Total utilized area	5.71
Pasture	2.93
Hay and silage	1.24
Arable land crops	0.50
Other (including rough grazing and forestry)	1.04

Farm Size

The farm size is small, the average being 23 ha (57 acres). Sixty-one percent are holdings of less than 20 ha (50 acres) and only 9% are greater than 50 ha (125 acres). A further feature is the number of permanently fenced fields – approximate size 2-5 ha (5-12 acres) (Table 3).

Table 3. Farm Size in the Republic of Ireland

Farm Size (ha)	Number of Farms (thousands)	Percent of Total
1-5	33.9	15
5-10	35.4	16
10-20	67.7	30
20-50	66.6	30
Above 50	19.7	9
Total	223.3	100

The Fertilizer Market in Ireland

Fertilizer Use

Fertilizer nutrients used during the 1988/89 season are set out in Table 4. Nitrogen usage, which has steadily increased from 87,000 tonnes of N in 1970, reflects intensification in the dairy and beef sector on Ireland's entry into the European Community. This is predicted to level off in the future owing to controls on dairy and other farm produce imposed by E.C. agricultural policy. Following the peak demand in 1978 (184,000 tonnes P_2O_5 and 221,000 tonnes K_2O), phosphorus and potassium usage has fallen and should now remain relatively static at current levels.

Table 4. Fertilizer Use in the Republic of Ireland, 1988/89

	Thousand Tonnes Nutrients	Percent of Total
Nitrogen		
Straight fertilizer	180	26
In compounds	169	25
Total	349	51
Phosphorus (P_2O_5)	148	21
Potassium (K_2O)	193	28
Total Nutrients	690	100

Almost 80% of total fertilizer consumption in Ireland is used on grass (pasture, hay, and silage); the remainder is applied mainly to cereals, sugar beets, and potatoes.

Product Range

Approximately 1.7 million tonnes of product is used annually–all in the form of dry granular material. Of this 580,000 tonnes (34%) is "straight" nitrogen, mainly as calcium ammonium nitrate (CAN) and urea.

The "compounds" (1.1 million tonnes) may be conveniently divided into three broad product groups, namely:

1. PKs – binary compounds containing no nitrogen.
2. Low N compounds – NPK compounds containing less than 20 units of nitrogen.
3. High N compounds – NPK compounds containing more than 20 units of nitrogen (See Table 5).

Table 5. Type of Products Used in the Republic of Ireland (1988)

	Thousand Tonnes
Compounds	
PK (Binary) (0-16-36; 0-23-24)	236
Low N compounds (less than 20 units N) (18-14-14; 14-16-16; 10-23-24; 9-14-18 + B)	486
High N compounds (greater than 20 units N) (24-6-12; 27-6-6)	390
Total Compounds (80% blends)	1,112
Straight Products	
Mainly CAN and Urea	595
Total	1,707

The full range consists of 21 standard formulations of which only 8 account for 94% of total compounds used. The remainder are mainly special NPK grades incorporating sulfur as sulfate of potash (for potatoes) or boron as a trace element. Although the product range may appear small (there is no "prescription blending"), there are sufficient formulations to give the Irish farmer a choice most suited to his specific needs, and he has learned to tailor fertilizer usage to crop and soil requirements thus avoiding over-usage of expensive nutrients. The acceptance and use by the farmer of this broad range

of standard products are a direct result of the widespread promotion and use of blending in Ireland.

This "standardization" of products owes its origin to the time when government subsidies were paid on fertilizers and formulations were controlled by the Ministry of Agriculture. Standardization simplified administration and helped educate the farmer to use fertilizer. It now facilitates overall planning and efficiency within the industry.

Definition of Fertilizer Blending

The term "fertilizer blending" has different meanings depending on the particular market referred to and any definition should be expanded to include the production, distribution, and marketing aspects.

Definition in the United States

In the United States where fertilizer blending is generally referred to as "bulk blending," it may be defined as:

> The physical mixing, without chemical reaction, of two or more dry fertilizer materials to produce complete (two or more) nutrient mixtures.

The U. S. terminology also embraces –

> The complete distribution system in which fertilizer materials are shipped to farming areas (from large efficient production units, usually located near the natural source of the raw material), blended locally to specified formulations, handled in bulk, and applied on the farm by the local blender operator.

Definition in the Republic of Ireland

In Ireland the definition of fertilizer blending would be:

> The physical mixing, without chemical reaction, of two or more evenly sized dry granular materials (or intermediates), including screened (compacted) potash, to produce complete (two or more) nutrient mixtures conforming to standard formulations.

This terminology may be expanded to include –

> The mixtures are treated with conditioning agents (to preserve their free-flowing characteristics) and packed in 50-kg plastic bags which are palletized in 2-tonne unit loads and stored

out-of-doors for long periods of time before distribution via the independent retailer to the farmer for final application on the land.

Development of Blending in Ireland

Blending in Ireland had its origin in the late 1960s when corrosion and pollution problems, coupled with the availability of screened granular potash, made it more economic to blend dry granular triple superphosphate with potash to obtain PK formulations, rather than granulate the powdered materials.

Furthermore, during the mid-1960s three chemical-type NPK granulation plants were commissioned by the established producers in Ireland. These plants produced high-quality concentrated compound fertilizers (CCFs).

Grassland Fertilizers Limited, which commenced operation in 1964 by mixing powdered compounds (ammonium sulfate, single superphosphate, and potash), built a small steam-granulation plant (based on dry input materials) in 1969 when powder mixtures became obsolete. Increased demand for high-quality granular fertilizers saw our company developing the technique of producing special granulated NPK "bases" in its granulation plant. This process simply granulated "standard" potash with ammonium sulfate and powdered single superphosphate to produce a low-N, low-P, and high-K granular base for blending with granular MAP, DAP, and NP intermediates. These blends effectively competed with the CCF products in appearance, quality, and price. In the mid-1970s, after the worldwide price crisis in the oil and phosphate industries, the Irish fertilizer market suffered a sharp decline in fertilizer demand, particularly in phosphate. As the decade progressed, most of the granulation plants making CCF products were shut down for economic reasons and blending became the logical alternative; particularly since the farmers were unwilling to pay a premium for the CCF product. The last remaining chemical compound plant was closed in 1983. There are now nine blending plants in the country, with annual outputs ranging from 50,000 to 250,000 tonnes (Figure 1). These are operated by four companies, three of whom supply over 75% of the market.

Raw Materials Used for Blending in Ireland

As already mentioned, finished products are mostly "standardized" formulas. The materials (all granular) used in blending include:

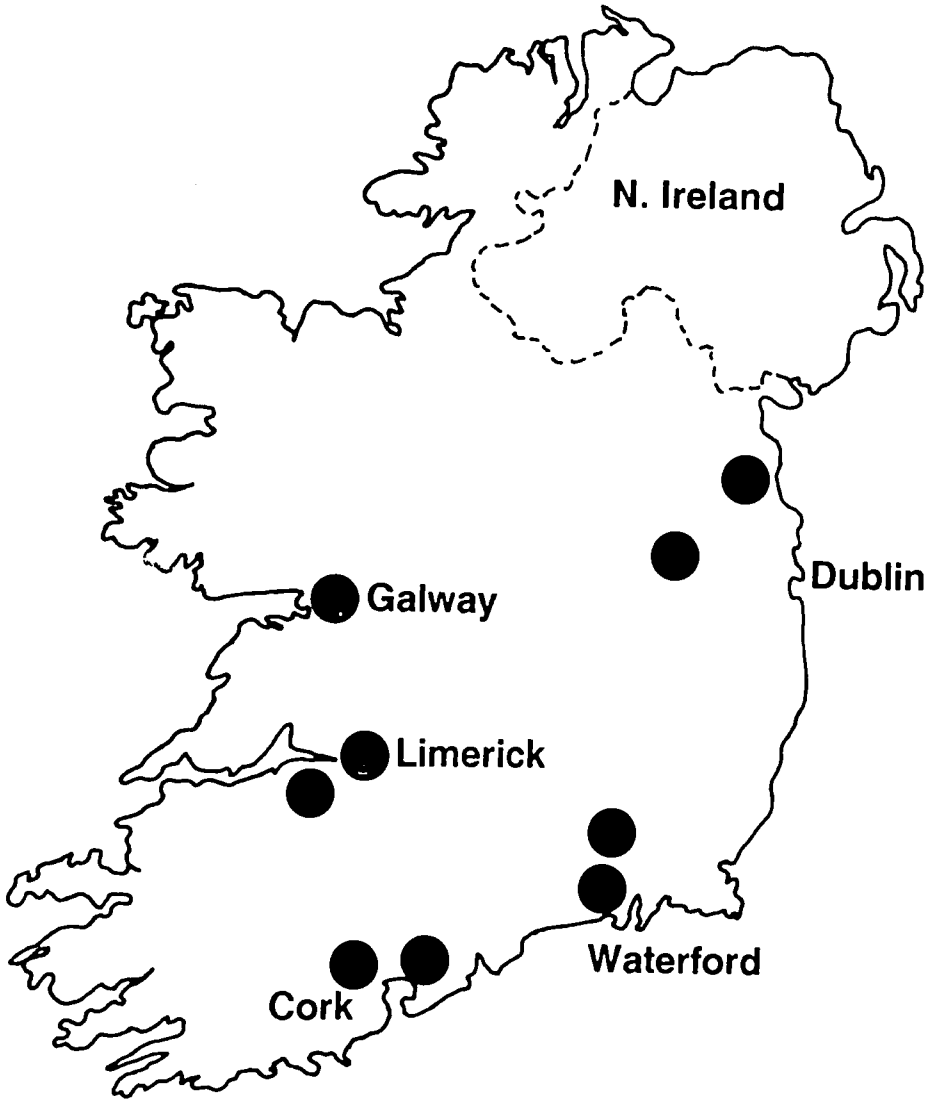

Figure 1. Location of Blending Plants in Ireland.

1. Ammonium phosphates – DAP and MAP.
2. Superphosphates – TSP and SSP.
3. Ammonium phosphate nitrates – NP bases, e.g., 30-10-0 and 26-14-0.
4. Calcium ammonium nitrate – CAN (27½% N).
5. Ammonium sulfate nitrate – ASN (26% N and 14% S).
6. Potash (screened) – MOP and SOP.
7. Granular urea.
8. Boron (trace element) – usually incorporated in a granulated base such as boronated single superphosphate.

Problems of segregation will occur if the U.S. size materials (TSP and DAP with a mean diameter of 2.0 mm) are mixed with the European or North African size materials (mean diameter of 2.8 to 3.0 mm). Therefore, manufacturers tend to obtain materials from a supply source that maintains a constant particle size. With the exception of calcium ammonium nitrate which is obtained from the domestic state-owned nitrogen producer, the materials used are mainly imported from Northern and Western Europe, North Africa, and the United States.

Typical Irish Blending Operation

A typical blending operation in Ireland consists of the following facilities (Figure 2).

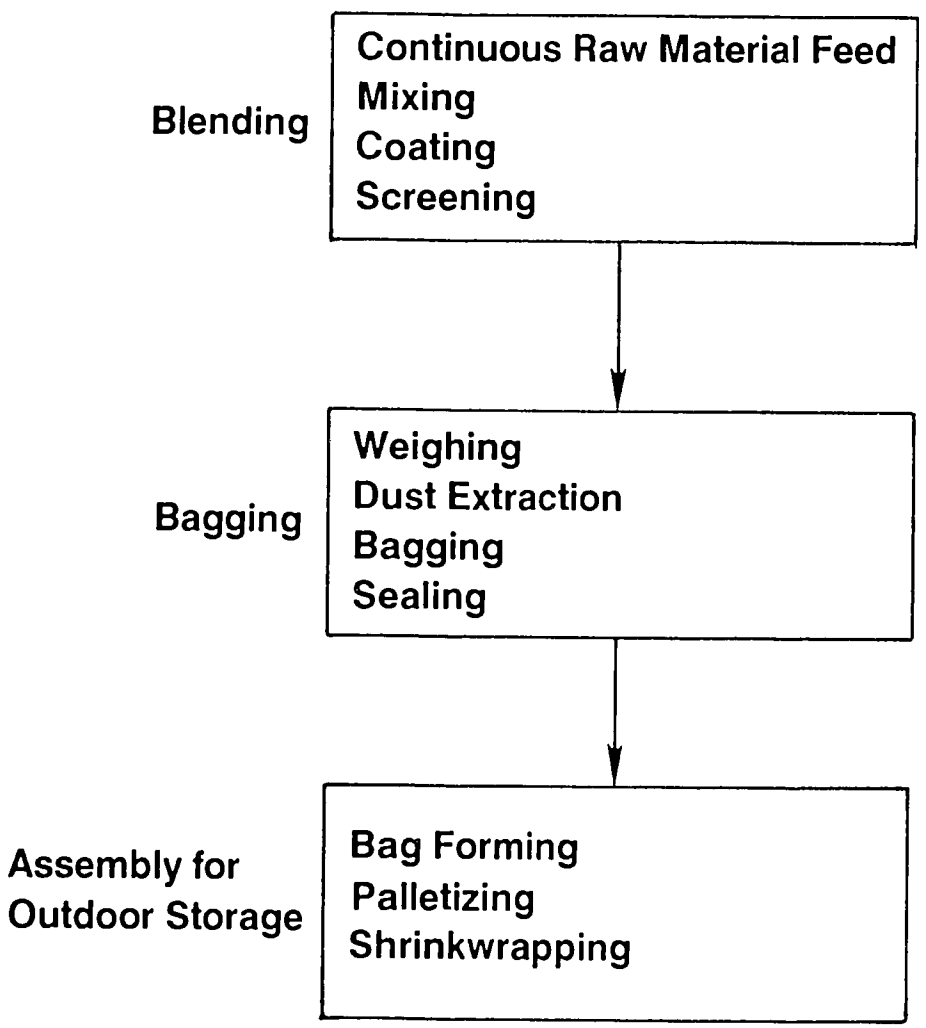

Figure 2. Main Features of Irish Blending Plants.

1. Multibay raw material storage bins, some with automatic intake equipment.
2. Continuous proportioning system fed by a front-end loader.
3. Coating, mixing, and screening.
4. Bagging plant–one or two 60-tph lines (some with automatic empty bag feeders) and heat sealer.
5. Automatic palletizer and shrinkwrap oven.
6. Outdoor storage facilities for palletized finished product.

Blending plants are located at (or convenient to) ports, and ships of 2,500 to 3,500 tonnes dead weight are preferred, the exception being larger vessels of 10,000 to 20,000 tonnes dead weight from the United States.

Ships are unloaded by use of a grab crane into suitably covered trucks and transported to the factory where the materials are accurately proportioned for the desired formulation by automatic continuous belt weighers. The mixed material is then conditioned for long-term storage with the application of special mineral oil and an inert clay, screened to remove the oversize, and bagged in 50-kg heat-sealed plastic bags. The sealed bags are automatically palletized in 2-tonne unit loads and covered with a heat-shrunk plastic hood.

The palletized load is taken to an outside storage yard where the product may be stored for periods ranging from 1 to 9 months without impairing its shelf life.

A detailed description of a typical 60-tph blending operation in Ireland follows.

Detailed Description of a Typical 60-tph Blending Plant in Ireland

Raw-Materials Intake System (Optional)

A typical system consists of a hopper at ground level into which a truck of 30-tonne capacity discharges. The intake hopper is covered with a 5-cm grid to prevent large lumps of material from blocking the system. The material is elevated by a chain- and bucket-type elevator, which discharges onto a conveyor belt that carries it into selected bays in the storage area. One of the advantages of this type of raw material intake system is that the trucks

discharging the raw material are kept outside the building, thereby allowing the payloader unhindered access when feeding the plant inside the store.

Continuous Raw Material Feed

Irish blending plants have a system of continuous raw material feed. Three main types are in use, namely:

1. Continuous belt weighers.
2. Constant-rate feeders.
3. Volumetric feeders.

Continuous Belt Weighers – Continuous belt weighers are very popular; they run at fixed speeds, have variable feed gate openings which are controlled electronically, and are accurate to ±0.5%. Each belt has its own automatic controller and there is a master controller for all (usually three or four) belts. Safeguards are built in to cover problems such as hoppers running empty or feed gates becoming blocked so that in either case all belts are automatically and immediately shut down.

Constant-Rate Feeders – Constant-rate feeders are also used by some blenders. These, by contrast, operate at variable speeds with fixed hopper gate openings. Belt speeds are automatically adjusted to give the required output, and they have accuracies and built-in safeguards that are similar to those of the continuous belt weighers.

Both systems are accurate, reliable, and easy to operate. Just simply dial up the required output and the controller will automatically control to this setting and shut down the complete feed system in the event of malfunction of any part of the system. Individual belts are set to feed at rates required for the formulation and the central controller can be used to increase or decrease the overall plant feed rate.

Volumetric Feeders – Volumetric feeders require accurate knowledge of bulk densities. In blending, where the different raw materials used have different bulk densities and where even the density of different shipments of the same material may vary, accurate operation of these feeders demands far greater attention than do the weigh belt-type units. Nevertheless, properly set up and controlled these feeders will also give good results.

All raw materials are normally fed onto a collector conveyor at such rates as to give the correct formula ratio. Since each material is fed at a constant rate, the materials are constantly being layered onto the collector belt in such a manner that a cross section of the material on the belt should

always have the correct nutrient content. Subsequent mixing as the blend moves through the remainder of the plant ensures a correct mix at all times.

Experience has shown that at least four raw material feed hoppers are needed to give adequate flexibility with regard to raw material and product formulations.

From the collector conveyor, which is common to all systems, the proportioned mix is normally fed through the coating unit for further mixing and conditioning to prevent the blend from caking during subsequent storage.

Coating Unit

The coating unit consists of a simple rotary drum (approximately 16 ft long and 6 ft in diameter) which operates at speeds of 6-10 rpm. The angle of inclination is 5°. The drum has no internal flights or ribs. The product is gently rolled in a continuous motion. Oil, at 80°C, is sprayed onto the rolling bed of material and a very fine inert clay is applied which is introduced into the drum by a screw conveyor. Typical application rates are 0.3% oil plus 1.0% clay. The additional cost of this "conditioning" is approximately US $1.50 per tonne of blended product.

Coating or Bonding Fluid

A bonding agent must be used to make the clay coating adhere to the granules. Traditionally, fuel oil was used but its limitations are gradually becoming apparent. Also, the farmers have adverse reactions to its undesirable side effects (for example, color and odor). Consequently, the industry in Ireland is changing to single-fraction lubrication oils which are much more effective and easier to handle and apply.

Blended oils are not recommended because the lighter oil fraction will be absorbed quickly. Neither can heavy single-fraction oils (or waxes) be used since these cannot be uniformly applied because they solidify too quickly when sprayed onto cold granules. The best compromise is a medium single-fraction oil which can be applied uniformly onto cold granules, even if some absorption does occur with time. Selection of the best bonding agent is not easy. Factors to be considered include temperature of the blend and the porosity of the blend ingredients.

Coating Clay

The main properties looked for in a coating clay are:

1. Low moisture content.
2. Fineness.
3. Lack of reactivity.

4. Hydrophobic (moisture repellent) properties.
5. Low free silica content.

Three types of clays may be used – china clay, ball clay, and talc. All are very fine with particle sizes in the range 1 to 10 microns and, when applied with good quality oil, give the product the properties required for long-term storage in bags. If the product is stored for a long period of time, there is a tendency for the clay to fall off giving rise to farmer complaints concerning dusty product. Fertilizer granules are porous and each raw material used has a different porosity, therefore, oil is absorbed to a varying degree by different materials, resulting in varying rates of clay falloff. The choice of coating oil is, therefore, critical. If clay falloff is excessive then the product becomes "dusty," the anticaking efficiency is adversely affected, and the product's free flowing properties can be impaired.

Screening

From the coating/mixing drum, the material is elevated to a horizontal vibrating screen. Product passes down into a holding hopper (over the bagging plant) and the oversize (above 5 mm) passes over the screen and down an oversize chute. The screen size required for a 60-tph plant is 8 ft x 4 ft. The screen is mounted on springs and vibrated by means of two motors attached to the screen frame. These motors have eccentric weights attached which may be altered to change the intensity of vibration.

Most blends made in Ireland are screened to remove oversize at least twice and some companies even screen at three separate points. Where raw material intake facilities exist, a grid is incorporated to exclude lumps. There is also a grid to exclude small lumps in hoppers over the weighbelts. Finally, the blended product is always screened for oversize removal prior to bagging. This can be done by rotating screens or vibrating horizontal screens (as described above).

Blenders do not find it necessary to screen out the fines because of the high quality of raw materials available. Because of the standardization of size ranges in Europe, materials used in blending in Ireland all conform to the same size range, usually 95% between 1.6 mm and 4.0 mm with a maximum of 1% below 1 mm. Any dust that may be created during handling and movement through the plant is extracted at the latest possible point before bagging, either in a dedusting chamber or from the bagging spout itself. Oversize and reject material, which is less than 0.5% of total, is sold off to local farmers.

Bagging Unit

The bagging unit consists of a product hopper (10- to 30-tonne capacity) feeding one, two, or three 50-kg weighers which discharge into a

bagging spout. Practically all product is bagged in 50-kg open-mouth bags. Blending and bagging has been developed as one integrated operation with the blending plant feeding directly to a bagging unit and blended product being bagged as it is made.

The more modern plants use computer-controlled load cell mounted weighers which can achieve outputs of up to 20 weighings per min (60 tph), and are extremely accurate (±20 g in 50 kg or 0.04%). The weighbucket is mounted on a load cell which is connected to an electronic controller. These weighers are self-checking and self-correcting; they can be set to check any range of weighings. In this way, the operator can control both accuracy and speed of operation, i.e., a fast operation with few weight checks or a slower operation with very accurate weights. When two of these weighers are used and discharge alternately in a 60-tph plant, then the rate for each weigher is only 10 weighings per minute, or half their possible capacity. This results in extremely accurate weighing. The weighers can be programmed separately for each blend. These programs can be held in memory which greatly reduces the time required for weigher adjustments at grade changes.

From the weighers, material may be discharged directly into bags or into a bag spout where the weighing can be held before discharge into the bag. The advantage of the latter system is twofold: (1) The material is dropped from a shorter height into the bag and (2) the discharged weigher can be refilling while the previous weighing is held in the bag spout or being transferred from the spout into the bag. Such bag spouts are normally fitted with a dust removal system to reduce dust levels and, of equal importance, to reduce the rate of dust adhesion to the inside of the plastic bag, so that heat sealing can be more effective.

Automatic machinery is available for placing bags onto the bag spout and subsequently feeding the bags to the heat sealer. However, these machines demand a "feed" of well-packed empty bags with no faults (for example, sticking) that would interfere with feeding. The speed of such an operation tends to be much slower than that achieved manually, and regular maintenance is required. Therefore, in general, manual bagging is still preferred in Ireland, and apart from the use of some bag-placing machines, there are no sophisticated automatic bagging machines in operation.

Bags used are polyethylene of the open-mouth design. Thickness varies from 700 to 1,000 gauge (175 to 250 microns) depending on the product and the application. Once filled, each bag is vibrated (to "settle" the material and expel air) and then fed to a heat sealer where bags are sealed by squeezing the plastic between two heated bands. The seals are normally cooled by water-cooled blocks or by blowing air on them.

Palletizing

All bagged product in Ireland is palletized on wooden pallets (5 ft x 4 ft). In the past this was done manually, but the modern requirements of pallet stability and better presentation together with high wage costs have resulted in a complete changeover to automatic palletization. There are many types of palletizers on the market but all have essentially similar features.

All pallet loads in Ireland, with the exception of urea, are 2 tonnes – eight layers of five bags. Urea is palletized in 1½-tonne loads. The five bags are positioned by a turning head or similar device. Each layer consists of three bags at right angles and two bags lengthwise. Some manufacturers like to position these bags so that all top seals face inwards. This results in better appearance and also protects against product spillage if there is any weakness in the top seal.

Each layer of bags is transferred onto the pallet in one operation. Each alternate layer is the mirror image of the previous one so that when placed on the pallet one bag overlaps two bags above and below, thereby creating an interlocking effect that improves the pallet stability. The bags contain microholes and it is common to pass them through a bag press prior to palletizing and to press each layer when placed in position on the pallet. Some manufacturers also use a press to compress the finished pallet. The application of all this pressure at various stages ensures that all trapped air is driven out through the microholes, resulting in a very stable and neatly presented pallet. This is absolutely essential as the pallets are subsequently transported over uneven yard and road surfaces.

Finished Product Storage

The final palletized load is shrinkwrapped, i.e., covered with a plastic hood – normally 300-400 gauge (75-100 microns) which is then heat shrunk in an oven or tunnel at 120°C. This treatment gives weather protection during subsequent outside storage as well as added stability during transit. Some manufacturers also use a bonding agent to hold the layers of bags together but this is not widespread. The bonding agent often presents difficulties to farmers removing the bags later.

Since Irish blending plants are operated practically all year round and the offtake season is very short, very high stock levels are built up. It would be impractical and very expensive to have covered storage for such large volumes, therefore, all products are stored outside. Although weather conditions are variable and sometimes very wet and windy, there is no deterioration of product. This is largely due to the fact that the packaging system employed is geared towards this type of storage, and the protection provided is adequate for Irish winter conditions.

Some problems arise when weather conditions are abnormal or longer storage is required. Ammonium nitrate-containing materials are widely used and these are subject to breakdown in warm weather. Although air temperatures in Ireland seldom reach the transition temperature (Phase III to Phase II crystallization state) of ammonium nitrate, heat can be concentrated inside the bags, and the temperature inside the bag can be substantially higher than the ambient air temperature. Therefore, even in a country like Ireland, with a maximum temperature of 27° or 28°C, protection against ammonium nitrate breakdown is necessary. This is normally achieved by the use of opaque bags and white or ultraviolet light-inhibited shrinkwrap covers. These treatments in themselves weaken the plastic and leave it more susceptible to degradation with time, so the extent of protection is normally a compromise between protection and longevity. The idea is to protect the material well and hope it will be used before plastic degradation can occur.

Plant Summary

The complete system – from the batching of the blend raw materials through mixing, coating, screening, weighing, bagging, sealing, palletizing, shrinkwrapping, and stacking outdoors – is one continuous operation. Plants are normally run all year round except for summer maintenance. Outputs are very high from these single-line plants, averaging 60 tph with an online time of over 90% (Figure 3).

Distribution System

All fertilizer is sold by the manufacturer to the wholesaler (merchant or co-operative) who, like the manufacturer, invariably has forklift equipment to handle palletized goods. Approximately 80% of the fertilizer is dispatched to the farm on pallets where the bags are usually removed from the pallet on arrival. At present almost all fertilizer is handled on the farm in 50-kg bags, although there is a tendency for the larger farmers to demand fertilizer in 500-kg big bags called Intermediate Bulk Containers (IBCs). This method of distribution, which was initially promoted by the state-owned nitrogen producer and the state-owned sugar company, is not as economic or efficient as the traditional palletized system. It costs the manufacturer an additional US $7/tonne and gives rise to problems in outside storage.

Advantages and disadvantages of using the 50-kg plastic bags, palletized in 2-tonne unit loads, may be summarized as follows:

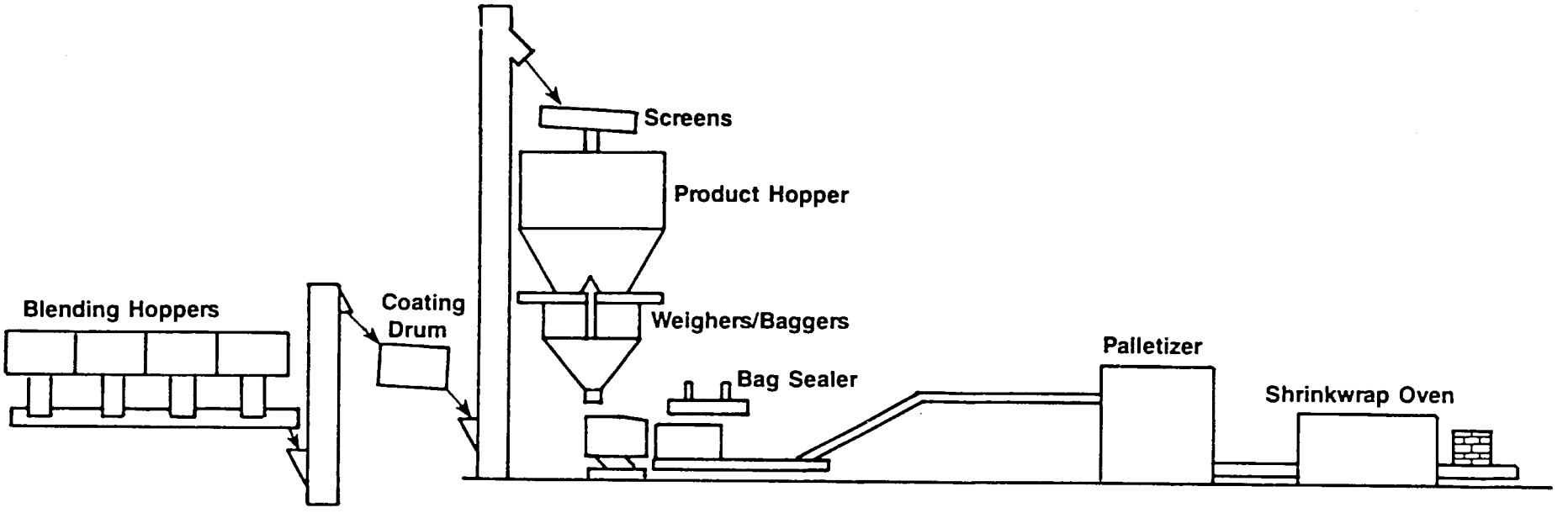

Figure 3. Schematic Diagram of Typical Blending and Bagging Plant.

Advantages:

1. The manufacturer can convert dry granular raw materials directly from the plant to the bagged state without incurring the expense of intermediate bulk storage.
2. The system of handling and distribution can be streamlined. A greater volume can be handled and stored with less labor, thus improving overall productivity and efficiency.
3. This method is most suitable for Irish climatic conditions. The conventional heat-sealed plastic bags offer sufficient protection from the atmosphere to obviate moisture pickup by the material, thus prolonging the shelf-life of the product.
4. There are no segregation problems once in the bag and provided the blend components are evenly sized.
5. The product can be packed 2 tonnes per pallet which can be safely stacked three, and in some cases four, pallets high. Pallets measure 5 ft by 4 ft thus 6-8 tonnes can be stored in an uncovered area of 20 ft^2.
6. Storing the bagged product in the open saves the expense of covered storage. The product can also be moved to merchant's/co-operative's premises and onto farm headlands outside the peak season.
7. The use of pallets facilitates transport by road and rail.
8. As far as the retailer and farmer are concerned, the 50-kg bags, pallets, and mechanical handling equipment are largely conventional considering other types of farm supplies and products that are handled.
9. Having regard to farm size and activity at the farm level, this system is most suited to Irish conditions.

Disadvantages

1. The manufacturer has to invest in pallets and maintain specialized equipment for palletizing and handling.
2. The pallets are returnable and problems associated with their consignment and eventual return to, and repair by, the manufacturer must be faced. Thus, the cost of administration is high.
3. The modern pallet is heavy for the farmer to handle and the cost of specialized equipment for handling bags on pallets is prohibitive for most farmers.
4. The cost in human labor and time are high for handling 50-kg bags on the farm and dumping them into the spreader.

In short, having regard to the seasonality of the industry (approximately 75% of fertilizers are applied over a 10-week period during February to May) and the high-volume/high-output plants, the pallet system has proved to be an ideal intermediate storage medium between manufacturers and farmer-users. Furthermore, the distribution network of the Irish fertilizer industry is based on the 2-tonne pallet system and any major change – for example, to bulk or big bags (IBCs) – would require considerable investment in

intermediate storage and handling equipment, the cost of which would inevitably be passed onto the farmer.

Farm-Level Application

On grassland, the fertilizer is broadcast by use of a "spinner" (centrifugal broadcaster); on grain crops it is normally distributed through a combine drill. The quality of the blend must be good. The blend components must be of similar size otherwise segregation will occur during application by the spinner, resulting in subsequent "striping" in the crop. The blend must not contain oversize which would block the screen on the drill applicator nor can there be excessive dust which would build up and restrict the drill hole, particularly in humid conditions. Over the years, spreading tests have been carried out to assess the spreading characteristics of blended products. Results of recent trials (Figure 4) clearly show that over the standard 40-ft spread, good blends and the CCF products show similar spreading patterns. Figure 5 shows the uniformity of nutrient spread of two blended fertilizers.

Product Quality

Quality control standards for the manufacture and analysis of fertilizers have been rigidly enforced by the Department of Agriculture since 1955. (A government subsidy was paid for phosphate and potassium fertilizers until 1976.) Since 1977 more stringent rules are being applied under European Community (EC) regulations. For example, when bagged product is sold to the EC standards the form and quantity of each nutrient must be clearly stated on the bag for control purposes and the analysis of the product must

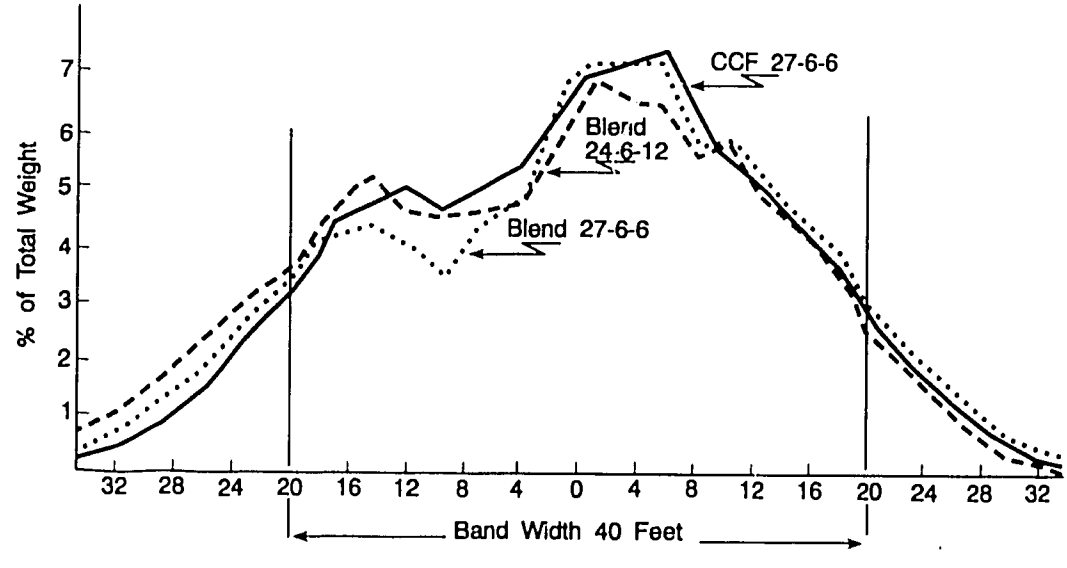

Figure 4. Fertilizer Spreading Tests.

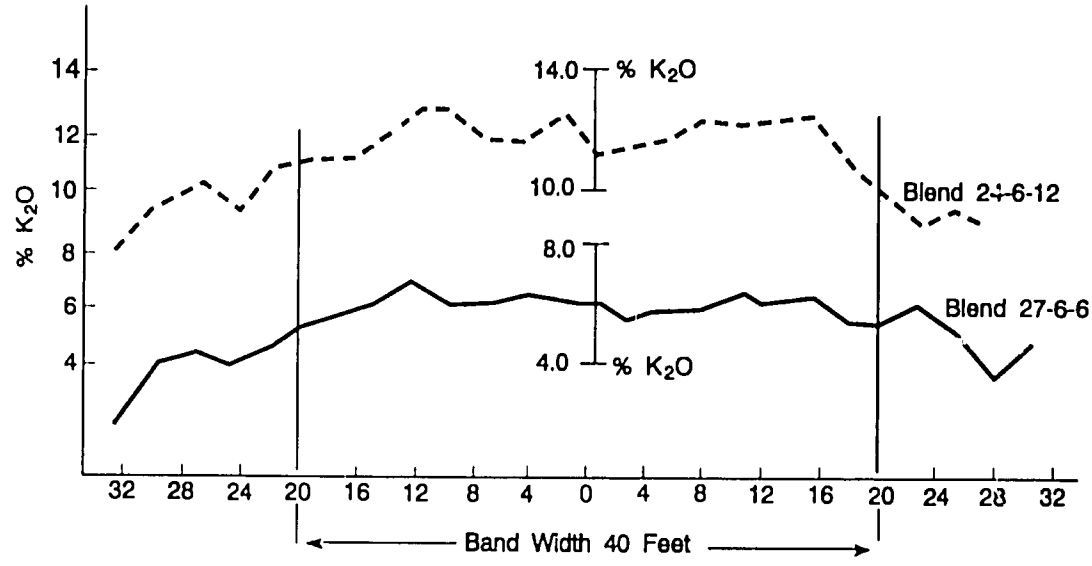

Figure 5. Fertilizer Spreading Tests.

conform to specification within narrow tolerances. Furthermore, the Irish fertilizer market is highly competitive; all blenders produce an identical range of standard formulations, therefore, product is sold on price, quality, and service.

Raw Material Specifications

Raw material specifications, to which our suppliers adhere, stipulate the following characteristics:

1. Moisture.
2. Granule size and shape.
3. Granule hardness.
4. Chemical analysis.
5. Color and general appearance.

Storage facilities are not air-conditioned and bulk material heaps (all indoor) are covered with plastic sheeting to minimize moisture uptake.

Particular care is taken to ensure that the materials when blended will be compatible to avoid deterioration in storage. Test stacks are constantly under surveillance, and every bag is date coded to facilitate investigation in the unlikely event of farmer complaint.

Segregation

Great care must be taken to prevent segregation in blends, and the modern plants are designed with this in mind. It is essential that materials of similar granule size be used for blending. Happily, these are now available to the blender and materials supplied from Europe and North Africa generally conform to a standard specification.

The major blend components used in Ireland are screened granular KCl, TSP, DAP, and APN (ammonium phosphate nitrate). Figure 6 shows the average size distribution of all shipments of these materials received by one major Irish company in the season 1985/86. Particle-size distribution curves for TSP, DAP, and KCl were very well matched, while that for APN tended to be somewhat coarser. It is clear that the use of materials such as those shown in Figure 6 will not give rise to segregation problems.

Segregation can occur when blends are stored in bulk, but since blends in Ireland are bagged directly from the blending plant without any intermediate bulk storage, this possible source of segregation is avoided.

Agronomic Response

In reply to the criticism that agronomic responses from blends are inferior to those from the homogeneous NPK granules (CCFs), it must be pointed out that when properly blended with suitable quality materials, there is no difference between the blends and the CCFs; this has been proved in practice in Ireland. Blends have an added advantage over the NPK granules in the flexibility to produce a wide range of formulations to suit various agronomic needs. Indeed, it might be argued that under certain circumstances higher agronomic efficiency could result from the use of blended products which can be easily matched to specific crop and soil requirements.

Potential Application of Irish Fertilizer Blending Techniques to Developing Country Locations

One can but generalize with regard to the main topic of this paper and hope that, through discussion, some conclusions can be formed with regard to stated circumstances in specific countries.

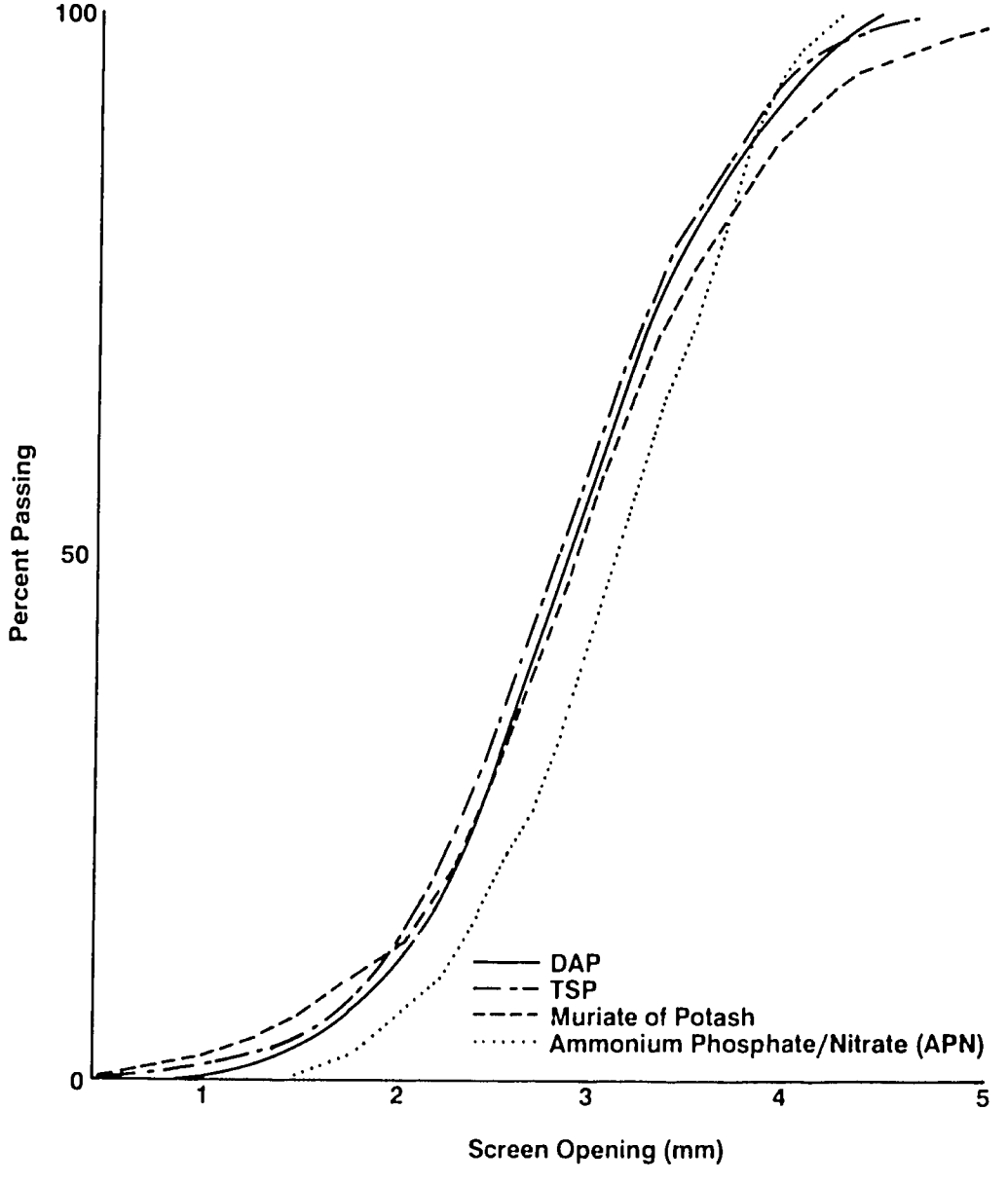

Figure 6. Average Size Range of Raw Materials Received by One Irish Blender (1985-86).

Fertilizer Handling

When comparing methods of fertilizer handling in various markets regard must be taken of the reasons which historically have led to the adoption of different systems. For instance, climatic conditions, methods of

transport, type of agriculture, farm size, crops, political, economic, and commercial conditions, etc., all play their part in the eventual selection of a system.

Furthermore, the manufacturer may have to plan raw material intake, production, storage, and offtake over an entire season to cope with farmer demand in spring. The ideal condition would be to produce the finished product as near as possible to the time of use thus eliminating or reducing cost of storage and working capital.

However, apart from these unavoidable costs, other factors such as conditions of storage, handling, compatibility of various materials, moisture uptake, physical characteristics, chemical stability, and "shelf life" of the finished product require constant attention.

The less handling bulk fertilizer products receive the less exposure they will have to atmosphere and the less moisture will be absorbed – in the Irish climatic conditions of high relative humidity this is particularly true. In recent years compound fertilizers have become more concentrated. In many cases, particularly in the high-nitrogen compounds and intermediates, they contain ammonium nitrate which, in certain conditions, is highly susceptible to moisture uptake. In NPK compounds, excessive moisture can trigger chemical reactions which lead to the formation of crystals and hence "setting" or "caking" of the product.

Other Considerations

With the foregoing problems in mind, let us consider some key questions, which may assist in determining certain courses of action:

Type of Agriculture and Soil Fertility – Do crop and soil conditions vary to an extent that many varied formulations are required for optimum return or would a relatively small number of standard formulations meet the agronomic needs? As already mentioned, in Ireland 73% of agricultural output is dairy and livestock products; consequently 80% of fertilizer is used on grass for animal feed.

Fertilizer Market – Consider the size of the local market, potential demand, and product range. What forms of nitrogen are most suited to the agronomic needs of the area, e.g., urea, ammonia, nitrate? With regard to phosphates – is a high water solubility required or would a citrate-soluble product suffice?

Raw Materials–Is there a source of indigenous natural raw materials, e.g., natural gas, phosphates, or potassium which could shape the direction of the domestic industry?

1. Where is the nearest source of such raw materials? What methods of transportation are required? Sea, road, rail, waterway? What handling facilities are needed for bulk materials? How about ports, transport, etc.?

2. Are good-quality granular intermediates available? What are the sources and types? Alternatively, are powdered or semicoarse materials available at relatively low cost? In this case a compaction plant may be considered.

3. It is significant that blending has made headway in those European countries whose P_2O_5 markets are phosphoric-acid based (e.g., Ireland, United Kingdom, and France) compared with the markets that are based on nitrophosphates (nitric acid reacting with phosphate rock) e.g., Germany and Norway. The latter process, being less costly, can more easily compete with blends.

Plant and Equipment–What size of plant is needed to supply the annual seasonal output required? This could range from 2,500 through 50,000, 100,000, 150,000, 250,000+ tpy.

At the lower end of the scale a conventional batch-type blending unit with a simple bagging plant may suffice.

Over 50,000 tpy would certainly warrant a more sophisticated automated plant, e.g., continuous raw material feed and possibly including high speed bagging and mechanical handling equipment.

Packaging–What size of bags should be considered? Big bags 500/1,000 kg? 50/25 kg? What type of bags? Polyethylene (plastic) or woven polypropylene with inner polyethylene lining? Perhaps even paper?

Finished Product Handling–Is palletization and shrinkwrapping required? Why? If palletization and/or outdoor storage is required, a whole range of new equipment must be considered: e.g., automatic palletizer, bag press, hood placer, shrinkwrap oven, forklift trucks, outdoor storage and dispatch area. Other items to be considered are:

1. Shelf Life of Bagged Product–Conditioning agents may be required.
2. Climatic Conditions–Are they suitable for outdoor storage?

3. Transport – Is suitable transport available for palletized loads?
4. Infrastructure – Do regional distribution points have facilities to handle palletized loads? Are the roads, railways, and waterways suitable?

Availability of Labor and Services – Is there sufficient skilled and semi-skilled labor available to maintain and operate a sophisticated automatic plant? Are supplies of spare parts and backup service available?

Environmental Considerations – Are problems likely to arise from environmental pollution caused by process emissions or byproduct disposal associated with chemical processing? If so, blending, which is free of chemical pollution, may be the answer.

Capital and Operating Costs for a 60-Tonne-Per-Hour Blending and Bagging Plant

Capital Costs

Table 6 shows the estimated capital cost for a basic 60-tph blending and bagging plant with optional palletizing and shrinkwrapping (manual and automated).

These costs, in U.S dollars, are based on current (1989) estimated prices for new plant and equipment, installed and commissioned in Ireland.

Additional costs (not included in Table 6) would include civil works and buildings, including a special purpose bulk storage building for raw materials with an optional intake system and perhaps an air-conditioning unit, a large area for outside storage, a weighbridge, offices, laboratory, and other off-site facilities (for example, an electric power substation and workshop).

Operating Costs

Operating costs will differ from region to region, therefore, it may be more practical to set out some basic statistics which may then be costed in accordance with local practices.

1. **Labor** – This will obviously vary depending on the level of output required and degree of automation. Table 7 shows the number of plant operators required for various levels of automation for a basic 60-tph continuous, single-line blending and bagging plant. In this unit a maximum output of only 40 tph can be obtained if manual palletization is used.

Table 6. Capital Cost for 60-tph Blending and Bagging Plant – Single Line Operation With Optional Palletizing and Shrinkwrapping

	Basic Equipment	Optional Equipment	Fully Automatic
	(US $)		
Blending (automatic)	130,000		
Continuous raw material feed			
Mixing			
Coating			
Screening			
Bagging	160,000		
Weighing			
Dust extraction			
Bagging			
Heat sealing			
Automation			150,000
Empty bag presenter (feeder)			
Sealer feed system			
Packaging			
Bag forming	}		
Palletizing	}	150,000	
Conveying system	}		
Shrinkwrapping		60,000	
Automation			
Hood (shrinkwrap) placer			100,000
Subtotal	**290,000**	210,000	250,000
		290,000	
Total[a]		**500,000**	500,000
Total[a]			**750,000**

a. ±20%.

Table 7. Operating Labor for 60-tph Blending and Bagging Plant – Single Line Operation With Optional Palletizing and Shrinkwrapping

	Basic Plant	Palletizing Manual[a]	Palletizing Automatic	Fully Automatic
	(number of persons)			
Supervisor (Foreman)	1	1	1	1
Blending (Automatic)				
Raw material feed – driver	1	1	1	1
Bagging				
Bag placing	1	1	1	0
Bag sealing	1	1	1	0
Packaging				
Palletizing	0	3	0	0
Hood placing	0	1	1	0
Stacking	-[b]	0	0	0
Forklift drivers	0	2	2	2
General				
Supplies, cleaning, miscellaneous	1	2	2	2
Maintenance				
Fitter/electrician/helper	1	2	3	3
Total	6+[b]	14	12	9

a. Only 40 tph is possible if manual palletizing is employed.
b. Additional operators may be required for stacking bagged product.

2. **Power** – The approximate installed electrical load is shown below:

Operation	Installed Power (Load)
Basic blending and bagging plant	100 kW
With automatic palletization	110 kW
Fully automatic plant	115 kW

3. **Gas** – 0.3-0.5 L/tonne for heating shrinkwrap oven.
4. **Packaging** – Approximately US $11/tonne for bags, shrinkwrap hood, and pallets.

The Future

There is an increasing trend for those countries that have natural resources, e.g., natural gas, phosphate rock, and potash to further upgrade and process them into more concentrated and marketable forms such as urea, phosphate intermediates, and granular potash, thus making products which are suitable for blending. Such countries, mainly developing and Eastern Bloc economies, will exploit these resources to maximize their added value, and further cost benefits will accrue from the economics of large-scale production units, and efficient transport (lower freight cost per unit of nutrient). However, most of these modern developments are state-owned enterprises which have criteria for performance other than financial profit, and so their actions (or lack of them) often complicate a rational marketing situation.

No doubt alternative competitively priced sources of N, P, and K exist and their development is posing a constant threat and challenge to established fertilizer producers. Furthermore, international traders will stimulate international movement between developing and planned economy countries and will be quick to exploit any logistic advantage, right down to promoting local demand.

The blender has flexibility to obtain the required nutrients from the cheapest source and the blending "philosophy" also exploits logistic advantages. Its aim is to market relatively low-cost fertilizer to the farmer, and, as has been shown in the United States, blending outlets are a good method of securing a "captive" market. When considering the general development of fertilizer blending, we see the "finished" product from the granulation plants being used as the "raw material" for the blending process. In the next stage, the chemical producers often develop "customized" products as "intermediates" for the blender. They thus maintain a captive market share, albeit indirectly. Blending is really a distribution function which "assembles" the products of the large chemical producers. It is, therefore, complimentary to these producers and not necessarily in competition with them.

In developed economies, particularly in Europe, fertilizer consumption is static or declining and there is a surplus of production capacity. Consequently, we may see the established producers supplying high-nitrogen intermediates to blenders in developing regions. Alternatively, the blender may

be pleased to accept the CCF products for bagging and distribution, since the processing costs for blending and bagging are similar and are relatively low.

As the people in developing countries become more educated and realize the value of efficient farming, they will soon become aware of the economic value of farm inputs in relation to price for agricultural products. They will, therefore, demand that fertilizers continue to give value for the money spent and, given acceptable quality, they will seek the lowest price.

Blending has the flexibility to exploit many alternatives. Table 8 demonstrates how standard (European) products can be either blended or used as the raw material ingredients in other formulations. ASN can be substituted for CAN if sulfur is required in the finished product. All materials used are standard products from European chemical plants.

These, then, are some of the challenges for the future!

Conclusion

The growth pattern of blends in Ireland has increased from an 11% share of the compound market in 1970 to 80% today (Figure 7). It can be concluded, therefore, that the Irish industry has successfully adapted the U.S. system of bulk blending to suit a quality-conscious market and, at the same time, has maintained and developed a relatively low-cost and sophisticated method of storing and handling bagged fertilizer. Hopefully, the experience gained from the Irish system will be of benefit to developing countries where a fertilizer industry and distribution network are required and are in the course of development.

Table 8. Flexibility of Blending

Standard Products (N, P_2O_5, K_2O)	Formulations: Raw Materials	Formulations: Percent of Formulation Input
27-6-6	Potash (KCl)	10.0
	30-10-0	60.0
	CAN	30.0
		100.0
20-10-10	Potash (KCl)	16.7
	DAP	21.7
	CAN	58.5
	Filler	3.1
		100.0
17-17-17	Potash (KCl)	28.3
	DAP	28.3
	30-10-0	40.0
	Filler	3.4
		100.0
17-17-17 (alternative)[a]	Potash (KCl)	23.0
	27-6-6	33.0
	20-10-10	14.0
	DAP	30.0
		100.0

a. This demonstrates how standard products 27-6-6 and 20-10-10 can be either in blended form or in granular form and used as raw material ingredients in other blend formulations.

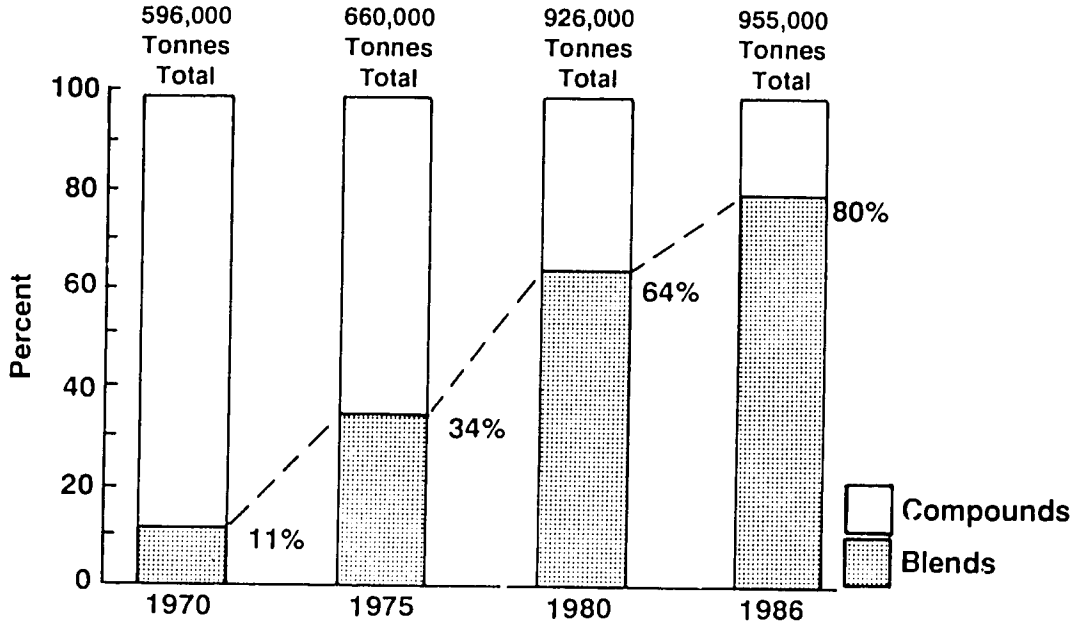

Figure 7. Growth of Fertilizer Blending in Republic of Ireland – Expressed as a Percentage of Total Compound Market.

Integrated Approach to a Fertilizer Production Project

Christian Fayard, Managing Director, TECHNIFERT S.A.

Introduction

First of all, I would like to point out and emphasize the basic idea (concept) that should guide us through this presentation; that is, optimizing the farm-level ratio – agricultural production versus fertilization cost.

This objective will be achieved if:

1. The greatest care is given to determining the exact requirements of the crop, supplying all that they need and only what they need, taking into account the specific agricultural conditions such as soil and climate.

   This is the Optimization of the Agronomical Yield.

2. The fertilizer used is both a product adapted to the specific requirements of the crop and soil as well as the most economical fertilizer (also a product that saves foreign exchange in certain cases).

   This is the Optimization of the Production of Fertilizer.

3. The fertilizer supply to the farmer that is well arranged at the right time and at the lowest cost.

   This is the Optimization of the Distribution.

The above three key points cannot be disassociated, and similar emphasis should be given to each of them when studying a project for a fertilizer production unit. The careful consideration of the above three types of problems is what we call the integrated approach to a fertilizer production project.

Integrated Fertilization

A direct consequence of the above considerations is that the team in charge of the management of such a project will have to be multidisciplinary,

i.e., composed of experts from various areas: engineers, financial advisers and economists, geologists, agronomists, as well as specialists experienced in logistics, marketing, and purchasing. They will have to work together in perfect coordination from the very beginning of the project.

Collection of Basic Data

1. The agronomic data needed are:

   - Maps of the soil and climatic conditions.
   - Maps of the various crops and levels of existing yields.
   - A catalog of the scientific research facilities (organizations and their technical level).
   - Assessment of the soil fertility.
   - Detailed analysis of the present agricultural methods and fertilizing techniques (quality and quantity of the fertilizers used and the timing of the applications).

2. Information about the local resources and potential supplies should include a list of:

   - Natural resources already mined or developed or possibly subject to future development (for example, phosphate rock deposits, byproducts, and waste materials).
   - Existing local production.
   - Possible imports.

3. A study of the technological background should cover:

   - Local sources of energy.
   - Locally available utilities.
   - Potential technical support (for example, maintenance and possible partnerships).
   - Labor force and capabilities.
   - Existing industrial zones and infrastructure.

4. The logistics facilities should be investigated, including:

   - The existing infrastructure; for example, the transportation network (roads, railway, rivers, and harbors), warehouses, handling facilities, and communications system.
   - Logistic costs.
   - Assessment of existing product flows.

5. A market feasibility study should be made and it should include:

   - A list of the fertilizer products available (quality and quantity).
   - Knowledge of the existing distribution system.
   - Determination of the existing customer profile.
   - A list of commercial practices.
   - Government organizations that assist agriculture in developing products and promoting techniques and training.

6. Local administration and regulations need to be studied. This includes:

   - Customs regulations and import duties.
   - Company policies and commercial law.
   - Environmental regulations.
   - Work regulations.
   - Government aid for employment and investments.
   - Banking laws.

Looking for the Best Adapted System

After the above-mentioned data have been collected, the study can be started and go through the following steps:

Determination of the Exact Crop Requirements (Agronomical Optimization)

1. The fertilizer requirements in kilograms per hectare must be determined for:

   - Main nutrients – N, P_2O_5, K_2O, and CaO.
   - Secondary nutrients – MgO and S.
   - Micronutrients.
   - Organic materials.
   - Each type of crop and soil in the project area.

2. Detailed formulation of fertilizing input; for example, should the P_2O_5 be soluble, partially soluble, or insoluble?

3. Optimum timing and methods of application.

Determination of the Best Raw Materials With Respect to Both Their Fertilizing Potential and Their Final Cost (Optimization of Raw Materials)

- Careful study of possible local raw materials.
- Purchasing strategy of raw materials to fit with financial resources and payment terms (counter trade, barter, purchasing pool, and others).

Utilization of These Resources for the Production of Adapted Products (Optimization of the Fertilizer Product)

- Determination of those products that meet the soil and plant requirements as well as the available raw materials (formulation and optimization of raw material cost).
- Development of proper processing methods for the selected product (optimization of the process).
- Determination of methods to control the agronomic efficiency of the products (when they are not conventional) by quick testing and pot experiments.

Selection of an Economical Industrial Process
(Optimization of the Technology)

- Appropriate technology should be selected to provide the most economical methods that can be adapted to the local industrial level.

- Pilot-plant studies should be made to determine the proper equipment size and capacity.

- Agronomic trials and demonstrations will be needed to confirm the product claims and to promote marketing.

- Estimates of the required investments must be made.

Determination of the Production System
(Optimization of Production)

- Plans for the production unit should be made in accordance with the ups-and-downs of market demand (optimization of storage).

- The location and size of production sites should be selected in such a way as to optimize the total logistic cost.

- A prefeasibility study of the proposed industrial production is advisable.

Determination of the Distribution and Marketing System
(Optimization of Distribution)

- Possibility of having the adapted system integrated into the existing distribution networks.

- Packaging of the products.

- Determination of a marketing policy.

- Estimation of the direct commercial costs (company-owned commercial structure) as well as indirect costs (distributors).

Project Feasibility

All that has been said so far may first appear as quite obvious, but our own experience has shown that this kind of integrated approach is not being carried out when preparing a fertilizer production project. Most of the time, only the technical side is considered. And often, when facing the economic realities, the project turns out to be very costly.

The number of factors to be taken into consideration, as well as the subjective side of some of them (for instance, the real nutrient needs of the crop), may seem to make the problem too complex. For this reason only an analysis of all the factors, as well as their interaction, will lead to a successful project.

Fertilizer Price Breakdown

By way of illustrating the above point, it is instructive to break down the final cost of fertilizer as follows:

Raw materials cost:
    Raw material price at plant location
Direct production cost:
    Product price ex-works
Marketing cost:
    Product price ex-manufacturer
Distribution cost:
    Product price ex-distributor
Transport and financial costs:
    Final price on the farmer's field

A detail of this typical cost buildup is shown in Table 1.

Table 1. Detailed Fertilizer Cost Breakdown

Expense Item	Logistics	Production	Miscellaneous
Raw materials (f.o.b. price)	X		
Freight and insurance	X		
Unloading	X		
Storage and reloading	X		
Transportation to plant	X		
Unloading and plant storage	X		
Losses	X		
Customs duties and charges			X
Storage (financial cost)			X
Raw material cost (subtotal)			

(Continued)

Table 1. Detailed Fertilizer Cost Breakdown (Continued)

Expense Item	Logistics	Production	Miscellaneous
Handling from storage		X	
Internal handlings	X		
Direct production cost		X	
Packaging cost (operation)		X	
Packaging (miscellaneous)		X	
Forwarding costs		X	
Storage of finished products	X		
Losses	X		
Storage (financial cost)			X
Production overheads			X
Cost ex-works (subtotal)			
Direct commercial costs			X
Company overhead			X
Profit			X
Cost ex-manufacturer (subtotal)			
Distributor fees			X
Transport to distributor's storage	X		
Handling	X		
Storage (financial cost)			X
Losses	X		
Cost ex-distributor (subtotal)			
Transport to final user	X		
Transport to field site	X		
Handling on farm site	X		
Losses	X		
Farmer financial costs			X
Final cost on farmer's field (total)			

No values are given in the table because each project has its own characteristics. However, when going over the breakdown of the cost buildup of the various expenses, the following is generally noted:

1. The preponderant share is logistics costs which in most cases exceed the direct cost of production and sometimes even the cost of raw materials as well.

   We believe that the logistic costs must be carefully analyzed, and that most of the time, the existing situation is not properly controlled. For example, the wrong use of the natural flow of transportation or the use of transport contracts that are disadvantageous often occurs. Sometimes the savings which can be affected by correcting these items may reach or exceed the production cost itself.

2. The fertilizer is generally being used by the farmer according to a seasonal timing. The same careful analysis is required for the financial costs generated by off-season storage at the level of the production plant (direct costs) and at the distributor and client levels (indirect costs).

3. It should be remembered that it is not enough to produce the products; it is imperative also to sell them. This supposes:

   - A reliable market demand; the demand often being largely influenced by the cost of the fertilizer itself.
   - The establishment of a commercial promotion system. This can be very costly as well as very consuming of energy and imagination.
   - The service concept should not be neglected; it is now becoming more and more important. This includes proper presentation of products and increased investments in distribution.
   - Often also, a training and information program should be set up to assist the farmer in using new products and possibly new application techniques.

The Main Strategic Options

In our opinion, the success of a fertilizer production project depends upon the good knowledge and control of certain key factors, including:

- Control of a market demand that can be made reliable through subsidy policies. When studying the size of the plant, it is important not to confuse potential market with reliable market demand.
- Control, except in quite exceptional cases, of at least two main raw materials (such as gas or another energy source, rock phosphate, sulfur or potash).
- Extensive flexibility in the installations to allow an easy adaptation to the market. This makes it possible to:

- Use a wide range of raw materials, in order to be independent of any particular vendor and also to take advantage of fluctuations in the market for the basic fertilizer materials.
- Produce a wide range of finished products, with great flexibility in the formulations. The producer must be able to adapt permanently to the user demand. Beware of the systems that are too vertically integrated.
- Limit the fixed operating costs to fit the market demand; for example, stop production instead of storing products. All this supposes a careful investment policy which retains the possibility of further expansion by self-financing.
- A highly efficient management where nothing is neglected and where everything is done to minimize the various costs (raw materials, logistics, production, distribution, ...) while keeping an eye on the development of the world market. It is to be kept in mind that the fertilizer industry is known to be one with marginal profits. A loss of 4% of the turnover is a disaster and can put a firm in jeopardy of failure.

It should be noted that our approach to the development of a fertilizer production project is that it remain close to the final user. However, it may be that, for reasons of national policy and strategy, it is advisable to take different decisions concerning the basic raw materials to be used, for example, phosphoric acid and its byproducts or the production of nitrogen-based fertilizers.

In our opinion, there is room for two systems which should be complementary to each other:

1. A basic industry with a limited range of products, located in large production units (strategic products).

2. A decentralized processing industry located near the final user.

One last point, it is obvious that the future project manager must be given enough autonomy to manage his company efficiently. For instance, he must be free to decide his sources of supply (imports, competition between suppliers, and other commercial factors).

The choice of the manager is one of the keys to success and certainly one of the most difficult to solve because unfortunately "real entrepreneurs" are scarce.

Conclusion

As it can be seen, the success of a project depends upon many factors, and it is quite dangerous to overlook any of them.

The integrated approach, guidelines of which are drawn in this short paper, is a way to success.

Granulation of Fertilizers by Compaction

Wolfgang Pietsch, President, KOPPERN Equipment, Inc. – United States

Abstract

For more than 30 years granulation of potash by compaction has been an accepted method for the manufacture of granular products with tight quality specifications. It is being used by the majority of potash producers worldwide. A review of the technique and the most commonly used equipment reveals that granulation of dry materials by compaction, crushing, and screening is even better suited for mixed fertilizers than for potash.

The particular advantages of the technology are its flexibility due to the possibility to easily and quickly changeover and adapt the process to new product formulations, the economic operation of systems of any size even with small capacities, and improved housekeeping as well as maintenance due to the handling of dry components.

The importance of this technology for developing countries is being demonstrated by the successful operation of a plant in Guatemala (1,2,3,4,5). The freedom to select raw materials from any of a large number of different sources on the free market allows to take advantage of special offers and thus, optimize the company's cost structure. It is also possible to use otherwise marginally or not suitable raw materials offering special agronomic characteristics, including the incorporation of micronutrients. Furthermore, it is feasible to closely work with individual farmers and formulate fertilizers for their particular crops, soils, and climatic conditions. To accomplish the latter, small batches of special granular fertilizer can be produced without difficulties. Actual operating data show that in plants, like the one in Guatemala, production runs of as short as one hour duration may occur and that during a "typical" day, three or more different formulations will be manufactured for specific customers. This exceptional versatility is most interesting for tropical and semitropical agricultural zones where many different crops are planted within relatively small areas.

Introduction

Shortly after postulating the need for fertilization of plants with the basic nutrients – nitrogen (N), phosphorus (P), and potassium (K) – by Justus von Liebig, it was determined that, if solid fertilizer materials are being

applied, the availability of these elements depends to a large extent on solubility. In most cases a high solubility is desired requiring a large surface area which is synonymous with small particle size. It was also found that additionally micronutrients are necessary and, because of the small amount of these trace elements in a fertilizer formulation, they had to be added as fine powders.

Such powder systems exhibit a number of problems, for example:

- Uniform mixing of the components is difficult and time consuming.
- Dusting is pronounced during handling.
- Segregation of components occurs due to differences in particle size and/or density.
- Danger of caking exists during storage and transportation.
- Difficulties prevail during application (dusting, which may result in health hazards, runoff with water, and scattering by wind).

Therefore, it is not surprising that granulation of the powders by size enlargement has been looked at from almost the very beginning of fertilizer technology.

In the early 1950s pressure agglomeration emerged as an alternative to the already "conventional" tumble agglomeration methods in mixers, drums, pans, and suspended solids granulators. This technology (pressure agglomeration) uses roller presses which can be easily adapted to a wide range of capacities and materials (6,7,8,9,10,11).

Roller Presses

While the principle of roller presses is simple (Figure 1), modern machines are quite sophisticated (Figure 2). To maximize availability and minimize potential problems caused by insufficient routine maintenance, the machines are equipped with water cooling and automatic grease lubrication. Double output-shaft gear reducers provide for completely enclosed, dust-tight drives connected with the rollers by gear-tooth couplings and spacers which allow transmittal of full torque even at relatively high misalignment due to movement of the floating roller. In case of machines with high torque requirement, the oil of the gear reducers is continuously circulated, filtered, and cooled and the gear-tooth couplings may be equipped optionally with continuous greasing to guarantee long life.

The machine shown in Figure 2 is equipped with self-aligning roller bearings, optimally sized steel bearing blocks, and an automatic hydraulic pressurizing system with proprietary functions and hydraulic accumulators.

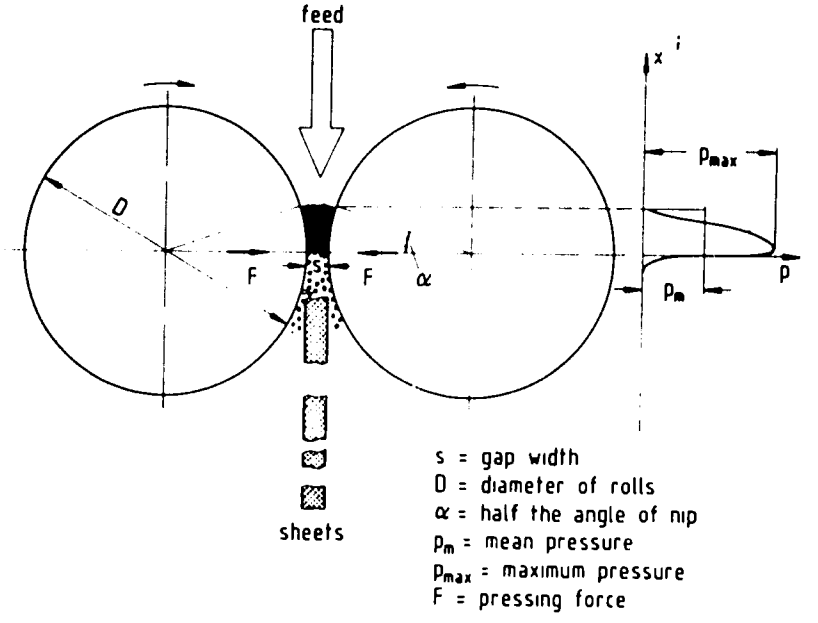

Figure 1. Schematic Representation of the Basic Principle of Roll Pressing.

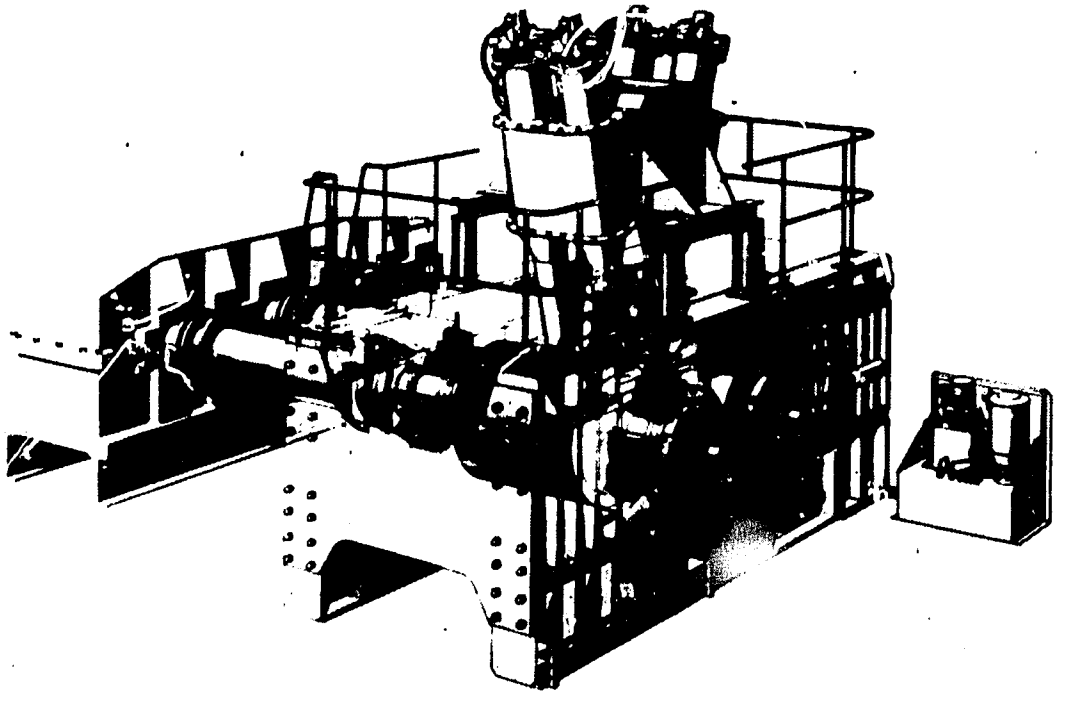

Figure 2. Artist's Conception of a Modern KOPPERN Roller Press.

The latter allow adjustment of the pressure response characteristic of the roller press (hard, soft, or any intermediate setting) and provides for overload protection. While in some cases simple gravity feeders with tongue control are provided, most applications require one or more screw feeder(s) with variable (e.g., hydraulic) speed drives to deaerate and transport the desired amount of material into the nip between the rollers.

Many fertilizer materials are minerals with a certain hardness and, therefore, cause wear. Other nutrients are salts or chemicals which, particularly in the presence of moisture, may additionally produce corrosion. For these reasons, it is unavoidable that the "pressing tools," which are fastened to the roller core by suitable means, must be exchanged in regular intervals for remachining or replacement. A patented design (12) shown in Figure 3 facilitates this work.

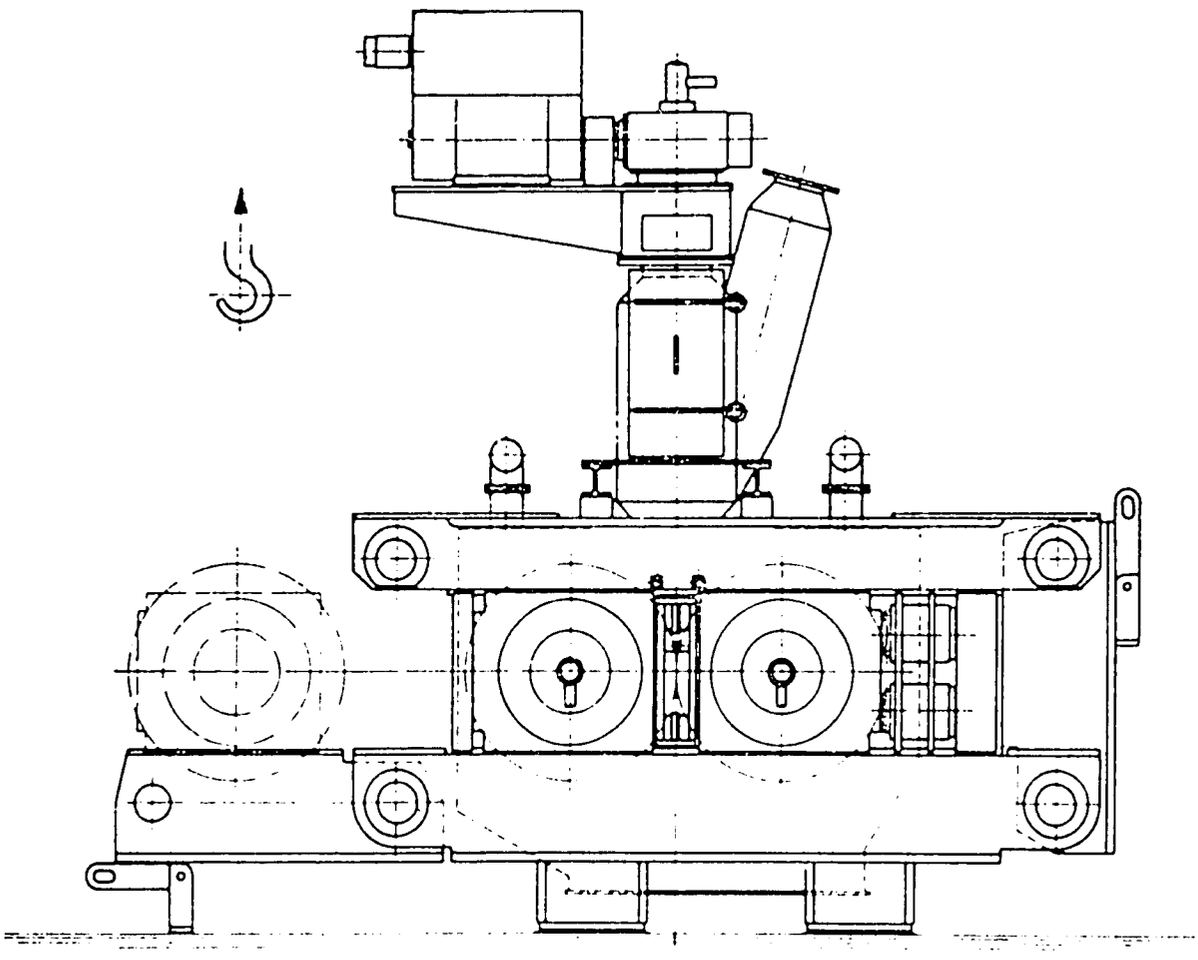

Figure 3. Schematic Representation of a KOPPERN Roller Press Featuring Hinged Frame Design.

Flowsheet of Fertilizer Granulation Plants Utilizing Roller Presses for Compaction

Figure 4 is the most versatile flowsheet of a fertilizer granulation plant using a roller press for compaction.

Premixed formulation (1) is fed into a surge (day) bin (2). Recycled material (fines, 17) and dust from dust collection system (20) are transported to bin (18). The latter should be sized such that, in case of an emergency or unscheduled switchover, the entire holdup of the plant can be accepted. If a new formulation must be run, the contents of recycle bin (18) can be dumped via diverter gate (19).

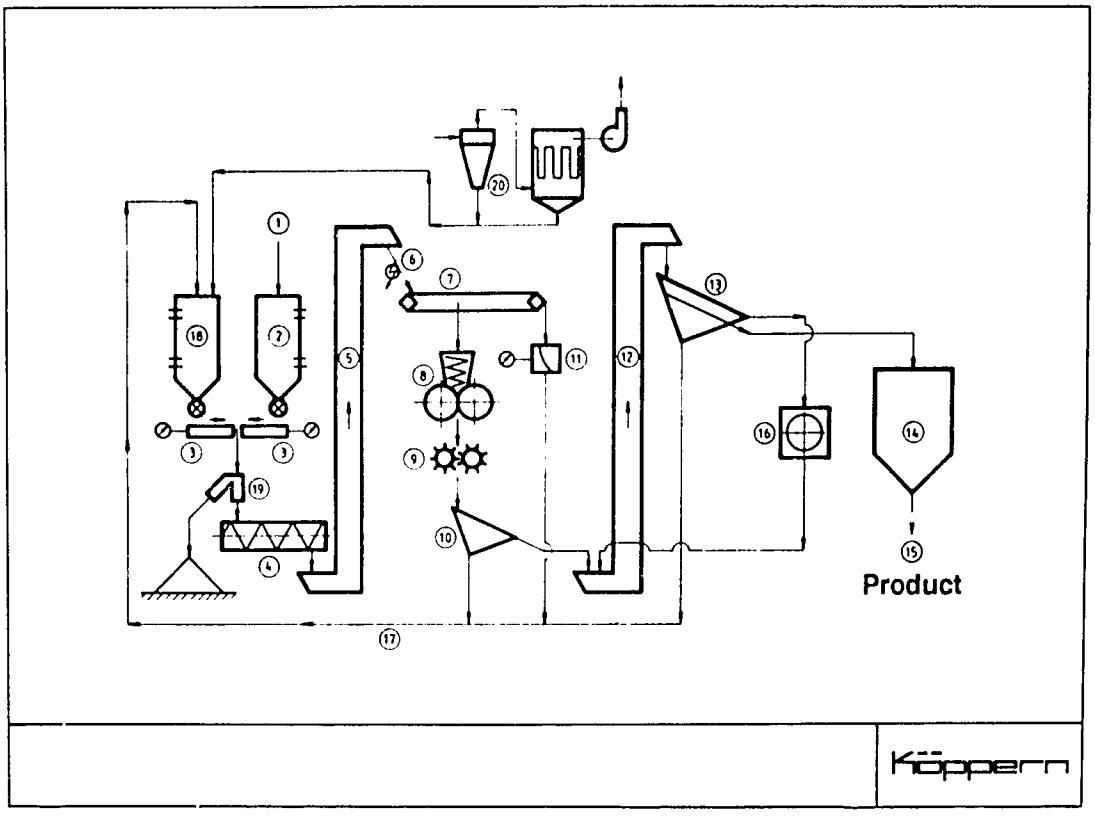

Figure 4. The Most Versatile Flowsheet of a Fertilizer Granulation Plant Utilizing a Roller Press for Compaction.

During normal operation fresh, premixed (if applicable) feed (1, 2) and recycle (17, 18) are proportioned by star gates and weigh feeders (3). The proportion of fresh feed to recycle should be kept constant; it is only readjusted if the level controls (low/low, low, high, high/high) in bins (2) and (18) require such modification of compactor feed composition. Typically, a changed relationship "fresh feed to recycle" necessitates readjustments of the compactor (8) and, sometimes, the oversize crusher (16) parameters. Fresh feed and recycle are homogenized in a low intensity (e.g., pug mill) mixer (4) and transported via bucket elevator (5), metal detector (6) and Redler/chain conveyor (7) to the roller press (8). No matter whether gravity or screw feeders are used to transport the material into the nip between the rollers, it is imperative to avoid "starved" feeding conditions at all times. Therefore, a small stream of overflow, measured by solids flow meter (11), is always maintained. The signal from flow meter (11) may be used to automatically adjust the system feed rate by controlling star gates and weigh belts (3).

The compacted flakes exiting from the roller press (8) are precrushed by flake breaker (9) and screened (10) to remove fines. Coarse material is transported by bucket elevator (12) to the screen (13) where product is separated and transferred to storage silo (14). Oversized material is crushed in granulator (16) and again separated into three fractions on a double-deck screen (13).

Potential modifications to this basic flowsheet are (refer to Figures 4 and 6):

1. Elimination of flake breaker (9): Sometimes the flake or sheet produced in compactor (8) breaks up easily when the compacted material falls onto a (belt) conveyor or screen and a flake breaker is not required.
2. Elimination of screen (10): Since only approximately 10% of fines [mostly "leakage" from the rollers of compactor (8)] is separated, this screen (10) may be eliminated. However, crusher screen (13) or primary granulator (22) – see 4 below – may be less effective.
3. Some materials are relatively soft when leaving the roller press (e.g., due to liquid phases resulting from energy conversion into heat) but quickly "cure" and reach higher strength. In such cases it may be desirable to install a "time delay" of a few seconds (curing belt, 21) between compactor (8) and flake breaker (9).
4. Addition of primary granulator: If the yield of granular product must be optimized, the reduction ratio in a mill or crusher should be minimized. To accomplish this, a primary granulator (22) is installed between screen (10) and bucket elevator (12).
5. Improved sharpness of product particle size distribution and optimization of yield: Particularly if primary granulator (22) has been installed

in the system, the loading of double-deck screen (13) is so high that its separation efficiency tends to deteriorate. Because limitations are often imposed by the user on the amount of oversize and fines in the product and, on the other hand, the presence of product-grade material in the oversize and/or undersize reduces yield, the decks on screen (13) may be selected to have larger and, respectively, smaller openings than required for attaining product specification, and final separation is achieved on secondary screen (23) prior to discharge into product silo (14).

6. Product particle rounding: Even though studies have shown (13) that the irregular (angular) shape of granular fertilizer obtained by crushing (Figure 5) does not have a negative influence on the efficiency and

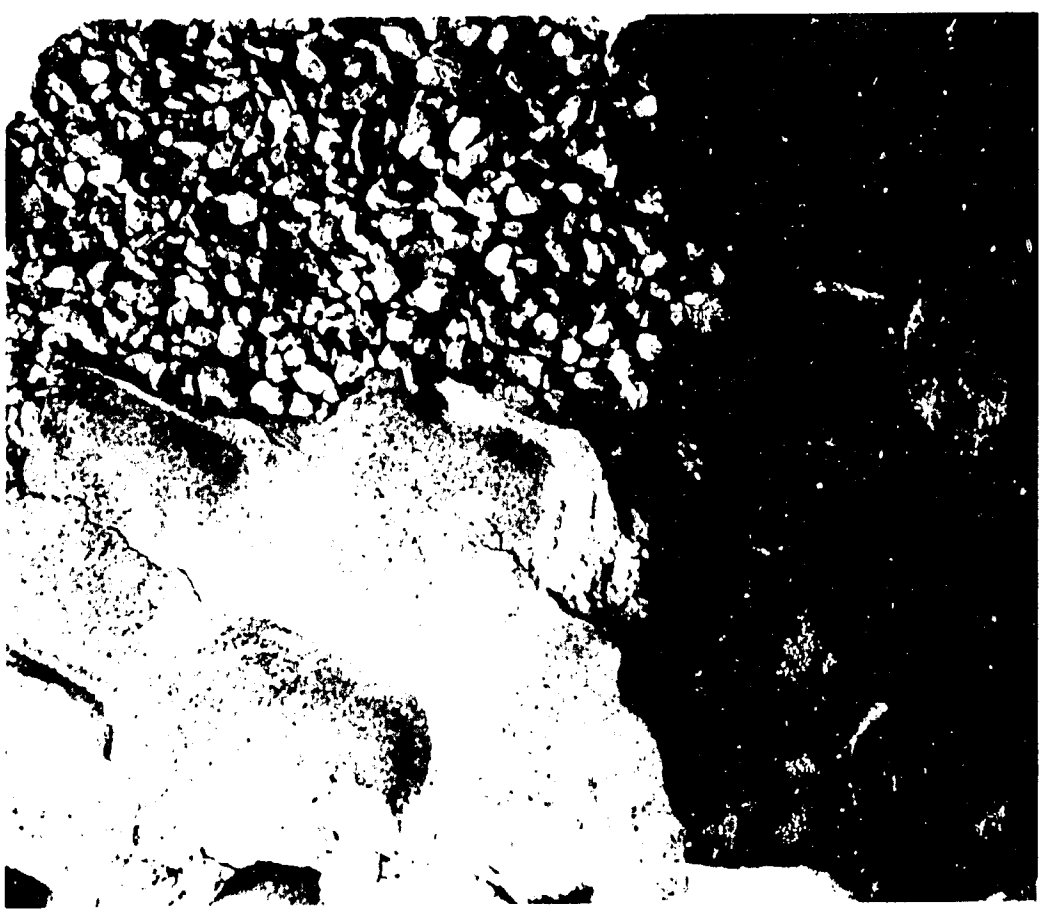

Figure 5. Photograph Showing Sheet (Bottom) and Granular Fertilizer (Top) Obtained by Compacting, Crushing, and Screening.

accuracy of distribution by modern mechanical rotary spreaders, it may be desirable to remove the sharp edges in an "abrasion drum" (24) to avoid excessive production of dust during handling and transportation. Additional fines produced in this drum are separated from the product on screen (25) and recirculated.

7. Product conditioning: In some infrequent cases, granular products must be conditioned or treated with anticaking reagents, insecticides, or fungicides. Such treatment can be done in a conditioning drum (26) prior to bin (14).

Figure 6 is a partial flowsheet (starting with feed to the compactor) incorporating modifications (3) to (7).

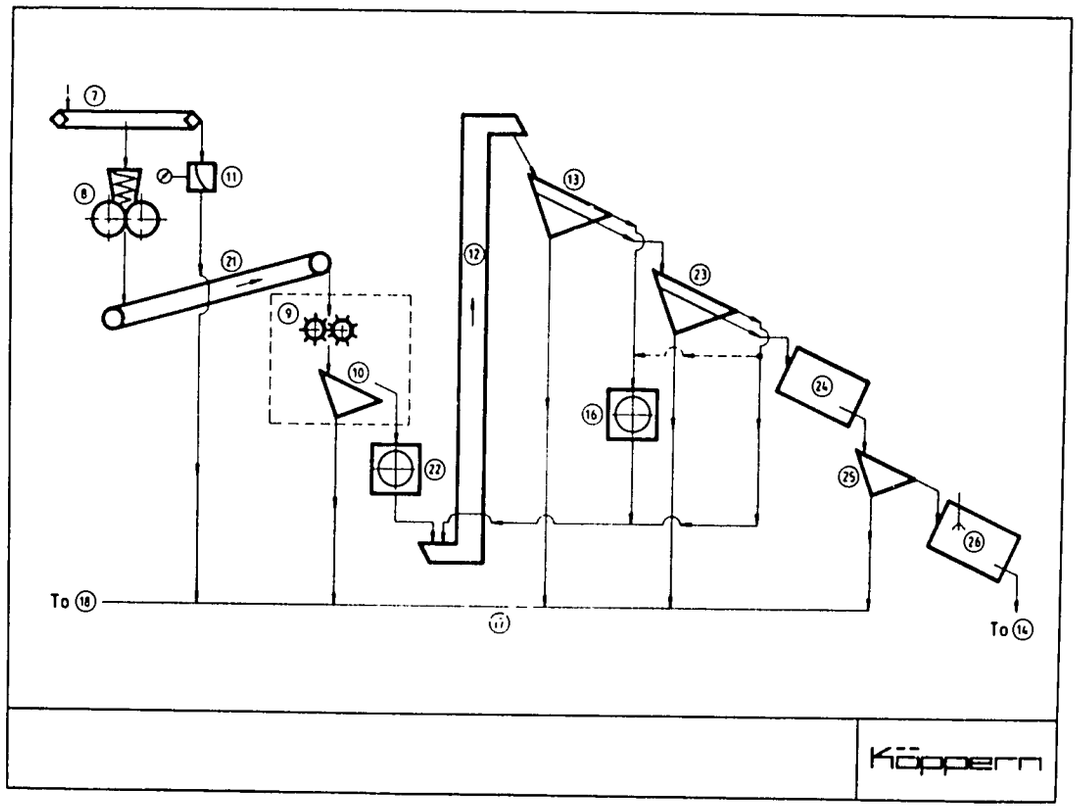

Figure 6. Partial Flowsheet of a Fertilizer Compaction/Granulation System Incorporating Modifications (3) to (7).

Selection of Roller Press and Peripheral Equipment

As previously mentioned, modern roller presses for application in the fertilizer industry feature special designs. In addition, operating parameters are determined during tests with the particular formulation(s). They include: specific pressing force, roller diameter, roller speed, and sheet thickness. Machine size and roller width are selected to meet capacity requirements.

The most important parameter is the specific pressing force, defined as force per unit active roller width (kN/cm), which is necessary to produce a strong enough granular product with acceptable yield (yield = ratio: amount granular product/compactor throughput). It is different for each fertilizer or formulation and varies between approximately 30 and 120 kN/cm (see Table 1) if materials are processed in presses featuring rollers with diameters of 1,000 mm and operating at 12-14 rpm with a sheet thickness of approximately 12 mm. Simple mathematical relationships allow to convert these figures to the conditions at different roller diameters and speeds as well as sheet thicknesses.

Also, as a result of testing or from experience, the surface configuration of rollers (e.g., smooth, corrugated, waffled, welded), the type and number of feeder(s) (gravity or force), and the drives, i.e., size (kW) and method (single or variable speed, electric or hydraulic, etc.) are chosen.

Selection of peripheral system components, such as mixers, crushers, screens, and material handling equipment, depends on the material(s) to be processed and, to a certain extent, on whether the plant is dedicated to the production of only one fertilizer or to a variety of formulations. Materials that reach final strength only after some curing time, for example, formulations containing urea, partially acidulated phosphates, or superphosphates, and fertilizers obtaining strength by recrystallization from solution, such as ammonium and potassium sulfates, must be handled, crushed, and screened delicately. Other applications, for instance, the granulation of potash, require high energy input for the production of a strong, abrasion resistant product (14).

Advantages of Granulation of Fertilizers by Compaction

A number of important reasons exist for the decision to adopt compaction with roller presses for the granulation of fertilizers. If "conventional" wet processes are used for only the size enlargement of fine fertilizer materials or the granulation of multinutrient fertilizers formulated by mixing different particulate solid components, relatively large amounts of water are added in the granulator which must be removed in a dryer. After

Table 1. Specific Pressing Force, Water Content, and Feed Particle Size of Some Fertilizer Materials Established for Compaction in Roller Presses

Fertilizer Material	Specific Pressing Force[a] (kN/cm)[b]	Water Content (%)	Feed Particle Size (mm)
Ammonium sulfate	100-120	0.5-1.0	<1.0
Potash 60% K_2O			
Feed temperature >120°C	45-50	dry	<1.0, with max.
Feed temperature 20°C	70	dry	of 3% <0.06[c]
Potash 40% K_2O			
Feed temperature 90°C	60	dry	<1.0
Potassium sulfate			
Feed temperature >70°C	70	1.0	<0.5
Potassium nitrate	100	0.5-1.0	<1.0
Calcium nitrate	60	dry	<1.0
Calcium cyanamide	60	dry	<0.4
Urea	30-40	dry	2-3 to <1.0
Mixed fertilizer containing			
- No raw phosphate or Thomas slag	30-80	<1.0	<1.0
- Raw phosphate or Thomas slag	>80	<1.0	<1.0
- Urea	30-40	<1.0	<1.0

a. Indicated pressing force is for machine having 1.0-m diameter rollers.
b. 1 kN/cm = approximately 0.1 tonne/cm.
c. Size criteria applies to >120°C and 20°C material.

the dryer, a cooler is necessary in most cases. Because of only very limited size control in the granulator, oversized agglomerates must be removed and crushed and all undersized material is recirculated to the granulator. Recirculation rates are several hundred percent, typically 300%-400%. In other words, product yield is only about 20%-30% of granulator throughput.

At the beginning compaction was applied to produce strong granular potash from KCl fines because dry material could be converted directly. Later this process was introduced to the mixed fertilizer industry primarily to save energy, (15,16). While the yield of granular product after crushing and screening is comparable to that of conventional wet granulation, i.e., between approximately 25% and 55% depending on fertilizer and product particle size distribution, the entire process is carried out dry. Therefore, a considerable amount of energy is saved which, in wet granulation plants, is expended for drying and cooling. The large amount of recycle, which must be rewetted and subsequently again be dried and cooled, exaggerates this situation.

This characteristic of granulation by compaction caused particular interest in the technology during the "world energy crisis" when energy prices rose to unprecedented heights. Today, it depends on the specific location and local costs of energy whether this feature is still a deciding factor. In the meantime, other advantages often play a more important role (1,2,3,4,5,9).

Closely related to the above is the combination of granulation by compaction with conventional wet granulation whereby all or most of the fines and the oversized particles are compacted. The original oversize crusher may have to be upgraded in this case to handle the compacted sheet, but the screening capacity is normally sufficient. The product is a mixture of nearly spherical and irregularly formed particles. This measure increases the capacity of the original system and, at the same time, considerably reduces energy consumption per tonne of granular product.

Today's most important advantage of granulation by compaction is the extreme versatility of the system:

1. Literally all dry particulate materials with only a few limitations as to maximum amounts in a formulation (e.g., urea or triple superphosphate) can be processed. This also includes such materials as, for example, dry, digested sludge from municipal waste treatment plants (17,18).
2. To minimize cost, raw materials can be purchased on the world market without specific requirements on particle size. Off-specification products (fines) can be used and, often, are even preferable.
3. Compaction plants can be designed for economic operation at any feed rate. Production capacities per line are feasible between 0.1 and 50 tph.
4. Larger plants are preferably equipped with two or more lines, fed by one large compounding, (batching or formulation) system. Otherwise the lines are kept separate to improve availability because only one line is down during maintenance and emergency shutdowns.

5. If a plant equipped with multiple lines features separate day bins for fresh feed, recirculating fines, and granulated product, each line can be operated on different formulations.
6. Production of small batches is feasible. Depending on the necessary amount of cleaning during changeover (determined by how much crosss-contamination can be tolerated), up to three different batches (formulations) per 8-h shift can be produced.
7. Granulation plants utilizing compaction can be combined with either custom designed batching systems or with standardized formulation or bulk-blending units. Particularly the latter methods allow easy expansion of bulk blending to mixed fertilizer granulation.
8. Any compaction/granulation system can be utilized as a regional production facility for the manufacturing of bulk-blend grade material from off-specification feeds. These include special formulations which are required by the local market such as indigenous fillers, with or without major nutrients, or carriers for micronutrients. Such products can then be used together with imported bulk-blend grade materials in bulk-blending plants.
9. Finally, the fact should be mentioned that plants with roller presses can be easily adapted to the manufacturing of urea supergranules for deep placement in wetland rice production (19). In this case, the roller surface must be modified, the flake breaker (9 in Figure 4) bypassed, and the granulator (16 in Figure 4) blocked off.

Present Status of Granulation of Fertilizers by Compaction

Although the history of fertilizer granulation is relatively short, a large number of plants are operating throughout the world and knowledge about granulated fertilizers as well as their manufacturing methods are well disseminated.

The granulation of fertilizers by compaction is much less known than the "conventional" chemical, wet, or melt granulation techniques. Roller presses for the compaction of potash were first introduced in the 1950s. Today, nearly all major potash producers use this technology for the manufacturing of granular and coarse grades (20). Approximately 10 years after the first use of roller presses for potash granulation, this equipment began also to be used for other fertilizer materials. Today, the technology is well established with many plants operating throughout the world (20).

Summary

Today's intensive farming and the needs for increased crop (food) production in the developing countries demand the use of fertilizers. To improve application to the fields and the quality of mixed fertilizers, several techniques have been developed which produce uniform, dustfree, non-segregating, granular products from particulate (fine and dusty) fertilizer components.

Because, in contrast to conventional methods, the granulation of fertilizers by compaction is using dry feed materials from an almost unlimited number of sources and without special requirements on particle size or distribution, this technique is gaining increasing importance in the industry.

Due to a number of special characteristics, which include versatility as well as applicability for small capacities and batches, the technology is of particular importance for developing countries.

References

1. Rodriguez, C. M. 1989. Production of NPKs and other fertilizers by the method of compaction. A viable solution for developing countries. Proc. Int. Conf. Fertilizer Latin America. Brit. Sulphur Corp., London, United Kingdom, Caracas, Venezuela, 449-458.
2. Pietsch, W., and C. Rodriguez. 1987. Granulation of Fertilizers by Compaction. Proc. 20th Biennial Conf. IBA. Editor: D. L. Roth, Orlando, FL, 113-126.
3. Swisher, M. A., and C. Rodriguez. 1988. Compaction of NPK Fertilizers, Proc. 38th Annual Fert. Ind. Round Table, Baltimore, MD, 34-37.
4. Taylor, L. 1988. Establishing a NPK Compaction/Granulation Plant in Guatemala, Proc. Int. Workshop, IFDC Spec. Publ. SP-9, Madras, India, 57-58.
5. Rodriguez, C. 1988. Compaction of NPKs in Guatemala, Proc. Int. Workshop, IFDC Spec. Publ. SP-9, Madras, India, 59-71.
6. Pietsch, W. 1971. Das Körnen von Düngemitteln mit dem Kompaktier-Granulierverfahren. Aufbereitungs-Technik 12, Vol. 12, No. 11, 684-690. English version in: Proc. of "Particle Technology," Seminar, Indian Institute of Technology, Madras, 335-348.
7. Stahl, H. 1980. Kompaktierung von Düngemitteln, Stand der Technik/Compacting of fertilizers, current state of technology (bilingual), Aufbereitungs-Technik, Vol. 21, No. 10, 525-533.

8. Lupin, M. S., and N. D. Le. 1983. Compaction - Alternative Approach for Granular Fertilizers, Tech. Bulletin IFDC T-25.
9. Pietsch, W. 1984. Granulation of Mixed Fertilizers by Compaction, Proc. 34th Annual Fert. Ind. Round Table, Baltimore, MD, 48-58.
10. Zisselmar, R. 1987. Kompaktiergranulieren mit Walzenpressen, Chem. Ing. Tech., Vol. 59, No. 10, 779-787.
11. Zisselmar, R. 1988. Compaction/Granulation of Fertilizers, Proc. Int. Workshop, IFDC Spec. Publ. SP-9, Madras, India, 46-56.
12. Koch, F. and W. Siepermann. 1975. Roll Press, U.S. Patent No. 3,899,965.
13. Brübach, M. 1973. The influence of particle size, strength, and friction on the distribution of granular fertilizers and insecticides, Ph.D. Thesis, Tech. Univ., West Berlin.
14. Pietsch, W. 1983. Modern Equipment and Plants for Potash Granulation, Proc. 1st Int. Potash Technology Conf., Saskatoon, Saskatchewan, 661-669.
15. Pietsch, W. 1983. Energy Conservation in the Fertilizer Industry - The Compaction/Granulation Process for Mixed (NPK) Fertilizers, Proc. 18th Biennial Conf., IBA, Colorado Springs, CO, 243-265.
16. Pietsch, W. 1983. Low-Energy Production of Granular NPK Fertilizers by Compaction-Granulation, Proc. Int. Conf. Fertilizer, London, United Kingdom, Vol. 2, 467-479.
17. Pietsch, W. 1985. Compaction/Granulation of Dry, Digested Sludge from Municipal Waste Treatment Plants, Proc. 19th Biennial Conf., IBA, Baltimore, MD, 179-194.
18. Schafer, P. et al. 1987. Compaction and Granulation of Dried Sludge at Ocean County, NJ, 60th Annual Conf. WPCF, Philadelphia, PA.
19. Lupin, M. S. et al. 1983. Briquetting - Alternative Process for Urea Supergranules, Tech. Bulletin IFDC T-26.
20. Pietsch, W. 1989. History, Application, and Present Status of Mixed Fertilizer Granulation by Compaction, Proc. Int. Conf. Fertilizer Latin America, Brit. Sulphur Corp., London, UK, Caracas, Venezuela, 153-173.

Design Parameters for Bulk-Blending and Compaction/Granulation Plants

Daniel M. Alt, Vice President, Engineering, The A. J. Sackett & Sons Company – United States

Introduction

This paper describes the design parameters found to be critical when planning and constructing a blending or compaction/granulation plant. The logic that should be followed during the design process is described. Also, the special, and often very important, equipment design features that have been learned from experience are discussed.

Bulk-Blending Plants

Bulk blending has emerged as the most economical process for producing NPK fertilizers. This is due to the large growth in production and availability of granular products (raw materials). A bulk-blending plant requires less equipment, and therefore, requires less expertise: also, it is a simple process to operate. The two major requirements for producing a good quality bulk blend are the use of raw materials that are closely matched in size and a blending system that is well designed. Bulk blending allows great flexibility in blending custom grades based on soil tests and available raw materials.

When designing a bulk-blending plant, the following questions should be considered:

1. How much storage is required?
2. What materials of construction are available?
3. How will the material bins be partitioned?
4. How will unloading be accomplished – by ship, truck, rail, or all three?
5. What is the required unloading rate? This will usually be determined by ship or rail demurrage criteria.
6. What is the required blending rate? This will be the main factor in determining equipment layout.
7. Will the materials be bagged or loaded out to truck?

8. How much bagged storage capacity is required?
9. What humidity conditions or other special weather conditions may affect equipment operation?

A discussion of the design parameters for the major systems follows.

Storage Buildings

The design of the storage building is based on the amount of raw material to be stored and available building materials. The amount of storage required is based on whether the material is transported by ship, truck, or rail. Raw material received by ship will require a larger storage building than material that is transported by rail or truck. The materials of construction for the buildings are concrete, steel, wood, and mineral composite roofing. Due to the corrosiveness of fertilizer, the best materials to use are concrete and wood.

Unloading System

The design parameters for an inloading system are the unloading rate (tph) and the building profile. The inloading system can load the storage building from the center or from the end. Loading the storage building at the center requires a drag chain conveyor that can change the angle of inclination from 0° to 45°. The shuttle conveyor is a reversible belt that travels the length of the building to provide access to all the bins. The drag chain conveyor feeds a reversible shuttle belt conveyor located above the bins. The drag chain conveyor has the advantage of incorporating a large hopper in the tail section that trucks can dump into. Since the hopper is part of the conveyor, there is no possibility of spillage at the feed point.

Loading the storage bin from the end of the building requires a drag flight conveyor, chain-type bucket elevator, and a belt conveyor the full length of the building equipped with a tripper to provide access to the bins. This type of arrangement involves more equipment and, therefore, is more costly. The belt and shuttle conveyor design consists of three-roll troughing idlers spaced on 4-ft centers. The troughing idlers are usually fabricated of carbon steel, but the rollers can also be fabricated from plastic with stainless steel frames. During installation, care must be taken to make sure that the idlers are aligned and square with the head and tail pulleys. These idlers are fabricated with a 2° tilt which helps to keep the belt trained. On shuttle conveyors where the belt can travel in either direction, every other idler is installed with an opposite tilt to help in training the belt both ways. It is very important that the idlers be lubricated on a regular basis because of the dusty conditions.

Chain-type bucket elevators are recommended instead of belt-type elevators when handling fertilizer material in humid climates. Belt-type

elevators tend to slip at the head pulley and burn the belt. The chain has much more positive traction due to the tooth-type sprocket and it also requires less maintenance.

The Blending System

The design of blending system is based on the rate (tph) required. A low rate of blending may only require (1) a mixer mounted on a scale that is charged directly by a payloader, (2) a conveyor, and (3) a bagging hopper with a bagger. This type of system will usually blend 20 tph. Most blending plants require a higher throughput capacity. In this case a tower arrangement is required which will deliver up to 80-100 tph. This throughput capacity will be usually governed by the capacity of the bagging equipment.

A tower system consists of a materials conditioner mounted over the boot hopper of an elevator. The materials conditioner is designed to remove (break) lumps from the material; this is essential in humid areas where caking may occur on the outside of bulk storage piles. The chain elevator is sized for 90 tph and discharges to a distributor that channels the material to any one of six 15-ton capacity bins in the overhead hopper system. Each of the hoppers has a high and low level indicator. These indicators operate lights on the payloader operator's panel. From the panel, the payloader operator can determine which bins need to be filled. Each bin is also equipped with an air-operated discharge gate.

The material from the overhead hopper is weighed into a weigh hopper. The weighing mechanism can be all mechanical with a dial head fitted with an electronic load cell connected to a digital read-out. With the electronic system, a computerized batching system can be incorporated into the design. The computerized batching system allows one to store up to 60 formulas in "memory." It is also capable of inventory control and producing a material usage record and a summary report of each.

When the system is started it will automatically weigh in the materials for any given formula. After the formula has been weighed, the weigh hopper gate will automatically open to discharge the material into the mixer.

Mixer Design

There are a number of factors to be considered in the design of a mixer:

1. Speed of filling the mixer.
2. Mixing time required.
3. Speed of discharge.
4. Mixer capacity.
5. Addition of liquids.

6. Proven quality of mix.
7. Material of construction.

One type of mixer that meets these criteria is a 4-ton paddle mixer. The paddle mixer can be fed by gravity from the weigh hopper in approximately 30 seconds. The mix time is 60 to 90 seconds, depending upon the number of ingredients and whether a liquid is to be added. The paddle mixer can have one to three discharge outlets. With three outlets 90% of the blend is discharged directly by gravity without the aid of the mixing paddles. The mixer will take approximately 60 seconds to fully discharge. The total time for a cycle is 2 to 3 minutes.

Handling the Blended Product

The blended product is conveyed to trucks or bagging hoppers. The bagging hoppers are equipped with internal partitions (cells) to prevent segregation. The most common type of bagging system includes an open-mouth bagger which is accurate and simple to operate, a sewing machine, and a bagging conveyor.

The major criterion for the design of the bagging, product, or other hoppers is the valley angles. The valley angle must be steep enough that materials will not hang up or build up on surfaces or in corners.

Construction Materials

The materials of construction are very important since fertilizer is very corrosive. Type 304 stainless steel should be used in critical areas of the blending tower system. All moving parts that come into contact with fertilizer should be made of stainless steel. The critical areas are the raw material distributor, weigh hopper, discharge gates, mixer, bagger, and bagging conveyor. Equipment that is fabricated of carbon steel should have a durable protective coating for prolonged service. Carbon steel is sandblasted to remove rust and mill scale and then a good primer and finish coat of paint is applied. The inside of the hoppers can be coated with a coal tar epoxy to prevent deterioration due to the fertilizer, especially in humid areas.

Compaction/Granulation Plants

Compaction/granulation has gained considerable attention in recent years. The attention is due to being able to use dry feed materials that are readily available in the world market. Compacting a mixture of the dry fertilizer materials produces a homogeneous granule that contains NPK just like the product from conventional wet-granulation processes using a drum-type granulator. The drum granulator requires liquids such as ammonia, acid, and steam or water to be injected into the drum to cause the chemical reactions

and liquid phase needed to form granules. The drum granulation method requires more trained personnel, more equipment, and a more elaborate system for recovering fumes and dust (usually some type of wet scrubber).

The design of a compaction plant requires establishment of the following parameters:

1. What is the required production rate?
2. What fertilizer materials will be used?

   The above two questions will determine the compactor size and whether multiple production lines are required.

3. What are the humidity conditions or special weather conditions which may affect equipment operations?
4. What area is available for the compaction plant?
5. What are the materials available for construction?

After the compactor size has been determined then the peripheral equipment can be designed. The assumption is made that the recycle fines-to-product ratio will be 1:1 to 2:1. If the recycle rate is known then that rate can be used to determine the size of other peripheral equipment. If the rate is not known a 2:1 recycle-to-product ratio can be used to determine the size of this equipment.

The discussion of the compaction/granulation plant design will include the following areas:

1. Bulk-blend system.
2. Material feed to compactors.
3. Compactor.
4. Size reduction and screening.
5. Dust collection system.
6. Electrical.

Bulk-Blend System

The primary raw material feed system for a compaction/granulation plant is identical to the previously described bulk-blending plant. After carefully weighing each raw material in a batch and properly mixing, the mixture is dumped into the continuous feed system for further processing before it enters the compactors.

Continuous Material Feed System for Compactor

The continuous material feed system consists of (1) equipment for metering the fresh feed and the recycle fines, (2) a double-shaft continuous pug mill mixer, and (3) drag chain conveyors. The fresh feed system also requires a mill to grind the previously blended fertilizer materials. The compactor requires feed material of relatively small particle size to assure good

operation and a homogeneous compacted product. The mill is a double-row cage mill that will produce a material of which 80% is minus 20-mesh and 50% is minus 45-mesh. The fresh feed from the bulk-blending system is conveyed to the mill by a drag chain conveyor and a bucket elevator. The feed rate to the mill is controlled by a variable-speed drive on the drag chain conveyor. The feed rate can be regulated from the operator's panel in the control room. The mill is mounted over the fresh feed hopper. The structural steel supports must be designed to be free of vibration.

The design of the fresh feed hopper must take into account the fact that the material is fine and sometimes hygroscopic. This becomes very important when a blend is used that contains a large amount of urea. The valley angle of the hopper should be a minimum of 60°. The level indicators for the hopper should be of the motorized paddle type. The size of the hopper depends on the rate of compaction and should be large enough to hold 15-30 minutes of production. If the fine material mixture (fresh feed) is sticky, the level of material in the fresh feed hopper is kept at a minimum to avoid plugging.

A screw conveyor at the outlet of the fresh feed hopper meters the material to the compactors. The screw conveyor is a volumetric type with a variable speed drive. The inlet of the screw is flared to allow the material to flood the inlet. The screw is tapered in diameter with the smallest diameter at the extreme feed end. The purpose of the tapered diameter is to obtain an even flow from the entire cross section area of the feed opening.

The recycle fines hopper should follow the same design criteria as the fresh feed hopper. The fines hopper is also equipped with the same type of variable-speed screw conveyor that are used on the fresh feed hopper.

The operator is able to control the rates of fresh feed and recycle fines from the operator's panel in the control room. The proportion of fresh feed-to-recycle feed should be kept constant. It should be readjusted only if the level controls for the bins indicate that a change in the proportion is required.

Before entering the compactor, the fresh feed and recycle feed are mixed continuously in a double-shaft pug mill mixer. Additives and/or water can be added to the material being mixed. Certain products require a small percentage of water to enhance the compacting capabilities. Care should be taken to avoid too much moisture because this can create additional problems in handling and operation.

After the pug mill, the material flow can be divided by means of a two-way valve to go to one or more compactors. The feed material is conveyed to the compactors by a drag chain conveyor. The compactors require a constant

and consistent flow of material and this is accomplished by the use of two outlets on the conveyor, one over the compactor and the other at the end of the conveyor to provide a continuous overflow of material. The overflow goes to the flake conveyor and is eventually recycled back through the system.

Compaction Machine

In selection of a compactor there are certain parameters that must be met on the basis of the product to be compacted. These parameters are:

1. Tons per hour of material to be compacted (production rate).
2. Materials to be compacted.
3. Material characteristics and flowability of materials being processed.

The compactor is comprised of two counter-rotating rolls; the shaft assembly of one roller is stationary while the other is movable. The movable roller is pressurized by means of a hydraulic system. The material is compacted as it goes through the rolls. The pressure that is applied depends on the material to be compacted. The counter-rotating rolls are force fed by one or more specially designed variable-speed screw feeders located immediately above the compactor rollers.

Size Reduction and Classification

The product is discharged from the compactor in the form of a large sheet or flake. This sheet must be reduced to a form that can be easily conveyed. This can be accomplished with a lump buster that will break the sheet into pieces of approximately 25 mm or less. The roughly broken sheet is then conveyed to a double-deck vibrating screen.

Selection of a screening system is crucial to the overall operation of the plant and final product sizing. The following design parameters must be established before a screen can be selected.

1. What are the physical properties of the material?
2. What type of screening is required – scalping, sizing, or fines removal?
3. What is the required feed rate?
4. What types of screening problems have been encountered with similar systems and materials? – screen blinding, screen breaking, or the need for excessive rescreening?
5. What are the product size specifications?
6. What is the required screening efficiency?

A discussion of the critical design features of the size reduction and classification equipment follows:

Screens – In fertilizer plants basically two types of screens are used; they are frame vibrated and cloth vibrated. Frame vibrated screens are usually horizontal with a gyratory screening motion. Cloth vibrated screens

are mounted on an incline with a vibratory screening motion imparted directly to the screen cloth. The cloth-vibrated screen is most commonly used because it incurs fewer problems with blinding and requires little manual cleaning. The frame vibrated screen will require some type of mechanical system such as bouncing balls (used in the Rotex® unit) to prevent blinding. A double-deck screen separates the material into oversize, onsize (product), and undersize fractions. The undersize (fines) is sent back to the recycle hopper and mixed with fresh feed and returned to the compactor. The product is conveyed to a bagging hopper or storage. The oversize is routed to a mill (crusher) and then returned to the screen.

Crushers – The type of mill or crusher used to reduce the particle size of the compacted sheet is determined by the amount of recycle generated and the product quality. Vigorous crushing will yield a strong granular product but result in a high rate of recycled fines. The type of mill used depends on the hardness of the compacted sheet. If the compacted material is hard then vigorous crushing is required. Compacted product containing urea and phosphates often is quite soft. The crushing equipment must handle the softer product more delicately.

Polishing Drum – A polishing drum is used in compaction/granulation plants to remove the sharp edges from finished product. Removing sharp edges will decrease the amount of fines created during handling. After the polishing drum, the product needs to be rescreened to remove the fines. These fines are returned to the compactor. The product can be sent to storage or bagging.

Dust Collection System

A dust collection system is installed to control airborne dust in the plant. The system consists of a fan, cyclones or baghouses, and air ducts. Major sources of dust are the hopper into which the payloader dumps the raw materials, the crushers, conveyor transfer points, the mixer, and the screens. The volume of air required depends on the number and types of collection points. The velocity of the air in the ducts must be kept at approximately 3,000 ft/minute. This velocity will keep the particles airborne until they get to the cyclone. The ideal design of the air system balances the pressure losses in the branch ducts to assure that the velocity (3,000 ft/min) remains fairly constant throughout the system. The fan is sized on the basis of the volume of air required and the pressure drop through the ducts. The fan is installed on the clean air side of the cyclone or baghouse.

Electrical System

Electrical systems in corrosive dusty atmospheres can become major trouble areas if not properly designed. The electrical system for a fertilizer plant consists of a motor control center, control panels, and electrical wiring.

The motor-control center includes safety disconnect switches, overload relays, and motor starter contactors mounted in a dust tight enclosure. An enclosed dust tight room with a positive pressure air purge should be provided for this center.

The control panel should provide the operator with a clear understanding of what is happening in the plant. This can be accomplished with a graphic display of the process and indicator lights showing which equipment is in operation and the position of two-way valves. Ammeters on the major pieces of equipment will also allow the operator to monitor the electrical load of the various motors and equipment systems. Controls to adjust the speed of conveyors that regulate the feed are also located on the operator's panel. The operator's controls should be mounted in an enclosure that meets the required dust-tight specifications.

If possible, all field wiring should be enclosed in polyvinyl chloride conduit. All junction boxes used in the plant should meet the dust- and water-tight enclosure specification and preferably be made of plastic. All wiring needs to be properly marked. This will prevent guesswork in the future as to wire and circuit identification.

Delegates and Invited Speakers

Mr. Marcelo French
Fertilizer Manager
Cargill Argentina
L.N. Alem. 928 - 9th Floor
Buenos Aires
ARGENTINA

Dr. Marcus V. V. Luisi
Senior Scientific Researcher of Research and Development Center
Cia. de Cigarros Souza Cruz
Avenida Suburbana, 2066 Vieira Fazenda
Rio de Janeiro - 21050
BRAZIL

Mr. Joachim Kemp
Fertilizer Sales Senior Manager
SOQUIMICH S.A.
Estado 152, 7° Piso
Santiago
CHILE

Dr. Armin Lauterbach
Managing Director, Research and Development
SOQUIMICH S.A.
Moneda 970, 15vo Piso
Santiago
CHILE

Mr. Javier Meneses
Fertilizer Manager
Cargill Chile Ltd.
Teatinos 333, 5to Piso
CHILE

Mr. Pedro Jordán Sainte-Marie
Operations Vice President
SOQUIMICH S.A.
Alameda Bernardo O'Higgins 949, 24° Piso
Santiago
CHILE

Dr. Hernán R. Tejeda S.
Senior Manager
Agricultural Research Division
SOQUIMICH S.A.
Estado 152, 7° Piso
Santiago
CHILE

Dr. L. Alfredo León (S)
Head of Soil Fertility Studies
IFDC/CIAT
Apartado Aéreo 6713
Cali
COLOMBIA

Mr. Edgardo Llanos B.
Economics Group Head
Monómeros Colombo Venezolanos S.A.
Vía 40, Las Flores
Apartado Aéreo 3205
Barranquilla
COLOMBIA

Mr. Fernando Mayoral (S)
General Manager, Fertilizer
Cargill Colombiana S.A.
Carrera 7 No. 72-13, 3er Piso
Bogotá
COLOMBIA

Dr. Jairo Salazar O.
General Manager
Mel Mix de Colombia S.A.
Calle 70 No. 4-50, 2do Piso
Bogotá
COLOMBIA

Mr. Rubén Carmona Astorga
Marketing Manager
FERTICA, S.A.
P.O. Box 5350-1000
San José
COSTA RICA

(S) Denotes invited speaker or panel member.

Mr. Mark A. Bruner
Plant Manager
CAFESA
P.O. Box 4588-1000
San José
COSTA RICA

Mr. Fernando Bourrouet León
Plant Manager
FERTICA, S.A.
P.O. Box 5350-1000
San José
COSTA RICA

Mr. José A. Madriz
Marketing Manager
CAFESA
P.O. Box 4588-1000
San José
COSTA RICA

Mr. William Edo. Solano Sáenz
Finance Manager
FERTICA, S.A.
P.O. Box 5350-1000
San José
COSTA RICA

Mrs. Miriam Murillo Soto
Sales Coordinator
FERTICA, S.A.
P.O. Box 5350-1000
San José
COSTA RICA

Mr. Sergio Almánzar P.
President
Kettle & Almánzar, S.A.
Paseo de Los Aviadores No. 4
Ensanche Miraflores
Santo Domingo
DOMINICAN REPUBLIC

Mr. Orlando Anderson
Fertilizer Plant Manager
Kettle & Almánzar, S.A.
Paseo de Los Aviadores No. 4
Ensanche Miraflores
Santo Domingo
DOMINICAN REPUBLIC

Mr. Franklin Rojas H. (S)
Export Manager
FERSAN
P.O. Box 1405
Santo Domingo
DOMINICAN REPUBLIC

Mr. Marcial Najri (S)
Assistant to the President
FERQUIDO
Ave. Luperón, Calle Central
Zona Industrial de Herrera
Aptdo. 346
Santo Domingo
DOMINICAN REPUBLIC

Dr. Klaus Brenner
Scientific Assistance, Latin America
Kali und Salz
C. Jimenez de la Espada 222, 2A
Quito
ECUADOR

Mr. José Eduardo Montenegro P.
Financial Manager/Director
SERTESA
P.O. Box 1982
San Salvador
EL SALVADOR

Mr. Ricardo F.J. Montenegro P.
Assistant to the President/Director
SERTESA
P.O. Box 1982
San Salvador
EL SALVADOR

Mr. Mario A. Silva
President
Agro Centro S.A. de C.V.
Paseo Escalón 3508
San Salvador
EL SALVADOR

Mr. Christian Fayard (S)
TECHNIFERT S.A.
B.P. 61
35406 St. Malo Cedex
FRANCE

(S) Denotes invited speaker or panel member.

Mr. Mario Rolando Aguilar
Operation's Manager
DISAGRO
Anillo Periférico 17-36, Zona 11
Guatemala, C.A. 01011
GUATEMALA

Ms. Rosa María Gordillo
Laboratory Director
Laboratorio de Análisis de Suelos y Plantas SQAI
11 Avenida 36-40, Zona 11
Guatemala City
GUATEMALA

Mr. Carlos Alpuente
Plant Manager
FERTILASA
Anillo Periférico 17-36, Zona 11
Guatemala, C.A. 01011
GUATEMALA

Mr. Richard L. Clark
Project Officer, Non-traditional Ag Exports
USAID
8ª Calle 7-86, Zona 9
Guatemala City
GUATEMALA

Mr. Frank Dalton
Operations Manager
DISAGRO
Anillo Periférico 17-36, Zona 11
Guatemala City, 01011
GUATEMALA

Mr. Roberto Dalton
President
DISAGRO
Anilio Periférico 17-36, Zona 11
Guatemala City, 01011
GUATEMALA

Mr. S. Alvar Delgado
Vice President
DISAGRO
Anillo Periférico 17-36, Zona 11
Guatemala City, 01011
GUATEMALA

Mr. Nils Elvemo
Marketing Consultant
Norsk Hydro Guatemala S.A.
6ª Calle 5-47, Zona 9
Edificio Vasil
Guatemala City
GUATEMALA

Mrs. Alma S. Houlding
Director
Agri-Chem Corporation
Avenida Reforma 1-90, Zona 9
Guatemala City
GUATEMALA

Ms. Dalia Castañeda Matta
2º Vice Presidente Junta Dir. Nac.
Compañeros de las Américas
Ruta 1, 4-05, Zona 4 (Edificio IGA)
Guatemala City
GUATEMALA

Mr. Oscar Oliva
Asesor Agricola
AID-Guatemala
12 Av. 13-00, Zona 10
Guatemala City
GUATEMALA

Dr. William Raun
Regional Agronomist
CIMMYT
Edif. Galerias Reforma
3er Nivel, No. 321, Zona 9
Guatemala City
GUATEMALA

Mr. José B. Rodas
Consultant
Compañeros de las Américas
Ruta 1, 405, Zona 4
Guatemala City
GUATEMALA

Mr. Cristian Rodríguez (S)
Fertilizer Consultant
11 Calle 29-69, Zona 11
Guatemala City, C.A. 01011
GUATEMALA

(S) Denotes invited speaker or panel member.

Mr. Gustavo A. Rosales
Agronomist Engineer, Promotion and Sales
DISAGRO
Anillo Periférico 17-36, Zona 11
Guatemala, C.A. 01011
GUATEMALA

Mr. Soheil Shahidi
FERQUIGUA
Km. 124 Ruta al Atlántico
Planta FERTILASA
Teculután, Zacapa
GUATEMALA

Mr. Mark Swisher (S)
Plant Manager
FERQUIGUA
Km. 124 Ruta al Atlántico
Planta FERTILASA
Teculután, Zacapa
GUATEMALA

Mr. Jean-Michel Cherubín
USAID/HAITI
77 rue Lamarre
P.O. Box 13372, Delmas
Port-au-Prince
HAITI

Mr. C. John Currelly (S)
USAID/OPE
P.O. Box 1247
Port-au-Prince
HAITI

Mr. Claude Derenoncourt
Vice President
AgroTechnique S.A.
P.O. Box 862
Port-au-Prince
HAITI

Mr. Carlos Albarto Barrera Fuentes
Asistente Operaciones
UNIOCOOP/ACDI
UNIOCOOP Ed. Plaza, 4^{0} Piso
Apdo. 293
Tegucigalpa
HONDURAS

Mr. J. Austroberto Lara P.
Projects Manager
FEPROEXAAH
P.O. Box 1442
San Pedro Sula
HONDURAS

Mr. Marco A. Queroz
Representante Tecnico Div. Operaciones
UNIOCOOP/ACDI
UNIOCOOP Ed. Plaza, 4^{0} Piso
Apdo. 293
Tegucigalpa
HONDURAS

Mr. John E. Leonard (S)
Managing Director
Grassland Fertilizers Limited
75 Merrion Square
Dublin 2
IRELAND

Mr. Thomas M. Young (S)
Group Production Manager
Grassland Fertilizers Limited
75 Merrion Square
Dublin 2
IRELAND

Dr. Kenneth F. Nielsen
Soils and Fertilizer Specialist
Canadian International Development Agency
CCO 5th Floor, Xerox Building
53 Knutsford Boulevard
Kingston 5
JAMAICA

Mr. Carlos A. López Q.
Plant Manager
Pan-Agro, S.A.
Apartado 4480
Zona 5
Panamá
PANAMA

(S) Denotes invited speaker or panel member.

Mr. Luís A. Ríos Espinosa
General Manager
FERTICA, S.A.
Carretera Interamericana
Apartado 57-B
David, Chiriquí
PANAMA

Mr. Julio A.D. Martins Mourao (S)
Deputy Export Manager
SAPEC AGRO S.A.
Apartado 11/2901
Setubal Codex
PORTUGAL

Dr. Anton Sutter (S)
Production Manager
Chemische Fabrik Uetikon
CH-8707 Uetikon am Zurichsee
Zurich
SWITZERLAND

Dr. Dianan E. Chandool
Chief Executive Officer/Director
National Agro Chemicals Limited
P.O. Box 666
N.P. House, National Drive, Sea Lots
Port of Spain
TRINIDAD

Mr. Daniel M. Alt (S)
Vice President, Engineering
The A. J. Sackett & Sons Company
1701 South Highland Avenue
Baltimore, Maryland 21224
U.S.A.

Mr. William Bastian (S)
Assistant Vice President
Fertilizer Division
Cargill, Inc.
P.O. Box 9300
Minneapolis, Minnesota 55440
U.S.A.

Mr. Guy R. Beardslee
Product Manager, Ammonium Sulfate
Allied-Signal Inc.
Engineered Materials Sector
P.O. Box 2332R
Morristown, New Jersey 07962-2332
U.S.A.

Mr. Marco A. Castillo
Manager, International Marketing
Allied-Signal Inc.
Engineered Materials Sector
P.O. Box 2332R
Morristown, New Jersey 07962
U.S.A.

Mr. Pierre Chanoine
Vice President, International Marketing
Texasgulf
P.O. Box 30321
Raleigh, North Carolina 27622-0321
U.S.A.

Mr. David Eugene Christopherson
President
Fertilizer Corporation of America
10300 Sunset Drive, Suite 272
Miami, Florida 33173
U.S.A.

Mr. Fernando Encinas (S)
President
Chilean Nitrate Corporation
150 Boush Street, Suite 701
Norfolk, Virginia 23510
U.S.A.

Ms. Rita Kirk
Manager, International Marketing
Agrico Chemical Company
1615 Poydras Street
New Orleans, Louisiana 70448
U.S.A.

Mr. Glen Magnuson
Vice President, Marketing
Fertilizer Division
Cargill, Inc.
P.O. Box 9300
Minneapolis, Minnesota 55440
U.S.A.

Dr. Wolfgang Pietsch (S)
President
KOPPERN Equipment, Inc.
5215 Chinley Court
Charlotte, North Carolina 28226
U.S.A.

(S) Denotes invited speaker or panel member.

Mr. Garry L. Pigg (S)
Manager, Special Marketing Projects
Agrico Chemical Company
1615 Poydras Street
New Orleans, Louisiana 70448
U.S.A.

Mr. Larry Taylor (S)
President
The A. J. Sackett & Sons Company
1701 South Highland Avenue
Baltimore, Maryland 21224
U.S.A.

Mr. Enrique J. Tomeu
President
Siboney International Corporation
P.O. Box 6665
West Palm Beach, Florida 33405
U.S.A.

Mr. James C. Wilson (S)
Agricultural Marketing Manager
Chilean Nitrate Corporation
150 Boush Street, Suite 701
Norfolk, Virginia 23510
U.S.A.

Mr. James Wyatt (S)
Senior Vice President, Operations
Frit Industries
P.O. Box 1589
Ozark, Alabama 36360
U.S.A.

Mr. Marcos Tulio Cabrera
Process Engineering Supervisor
PEQUIVEN
Complejo Morón
Morón, Edo Carabobo
VENEZUELA

Mr. Rafael A. Pinto
Technology Manager
PALMAVEN, S.A.
Avenida Tamanaco, entre Avenida José Martí y Calle Mohedano
Edificio Palmavén
El Rosal, Caracas
VENEZUELA

Mr. Christian Raissiguier M.
President
Agrilink, C.A.
Avenida Beethoven
Torre Financiera, Piso 7, Ofc. 7-A
Colinas de Bello Monte
Caracas 1050
VENEZUELA

(S) Denotes invited speaker or panel member.

Questions and Answers

The following is a summary of the questions/answers/observations that were put forth as a result of the information presented by the invited speakers and the visit to the FERQUIGUA fertilizer bulk-blending and compaction/granulation plant at Teculatán.

I. Regional Fertilizer Situation and Outlook

Question

It would be interesting to know the relative population growth of Latin America during the years discussed (1960-95) to balance the fertilizer use/production data presented (i.e., per capita). This would show the relative growth/loss of real progress in the industry.

Answer – J. J. Schultz (IFDC)

As shown in Table 3 of the paper entitled "Latin American Fertilizer Perspective, 1960-95," the per capita consumption of fertilizer (nutrients) in the region increased from about 4 kg in 1961 to about 22 kg in 1988. This translates to an increase from about 7 kg/ha in 1961 to about 50 kg/ha in 1988.

Question

Please explain the following about Venezuelan fertilizer subsidies.

1. How much was the difference from world or purchase price and farmer prices?
2. When they were reintroduced in 1983, what was the rationale?

Answer – J. J. Schultz (IFDC)

Up until 1989 the farm-level price of fertilizer was only about 10% of the true c.i.f. cost. Since the subsidy reduction in 1989, the farm-level price now stands at about 50% of the true cost.

After removing the subsidy in 1981 it was reinstated in 1983 in an attempt to increase food production (primarily maize, sorghum, and rice) and thereby decrease importation of foodstuff and save foreign exchange.

The subsidy was just recently reduced (1989) primarily because low oil prices greatly decreased Venezuela's capacity to subsidize fertilizer imports because of a shortage of foreign exchange.

Question

Government involvement exists in fertilizer production, trade (donor aid), and fertilizer use by farmers.

1. How do you see the trends in each of these categories? Is government involvement increasing or decreasing as affecting fertilizer use in this region?
2. What place do you think the governments should have, both in the producing countries and in the consuming countries, in this region?

Answer – G. L. Pigg (Agrico Chemical Company)

Government involvement, in my opinion, should be mostly in the area of farmer education – extension and very little in the area of price or cost support payments. As far as the trend in government involvement in the region, it may be better to defer comments on this to those who live and work in the region.

Question

What is the general situation with regard to the supply and pricing of raw materials used in the Caribbean Region?

Answer – G. L. Pigg (Agrico Chemical Company)

Granular DAP/MAP/GTSP bears no premium cost to the bulk blender while powdered MAP for nonblenders has a lower price. If 2-mm x 4-mm DAP is required, it will incur a higher price because its production cost is higher. Is the price justified? This will vary with the responder. In my opinion, the cost is not justified if the 1 mm x 4 mm material is uniform with 85% between 2 mm x 4 mm.

Granular urea does command a premium price, but this varies from country to country. In the United States US $8-$10/short ton is typical; the difference is lower in other regions of the world. The EEC countries have a similar spread as the United States whereas in most of Latin America the difference is more like US $1-$4/tonne.

I have no specific information on potash and defer discussion of this to others. I do know, however, that granular potash has a higher list price than the standard grade material.

Question

1. As high-quality raw material supply is critical to the blender, how did you go about initiating a total quality program in Ireland for raw materials that your suppliers must conform to? Did they resist?
2. Do they (raw material suppliers) charge you a premium to meet your quality standards?
3. Do you rate/grade your suppliers by certain quality standards?
4. Do you have a reliable long-term source of supply for your raw materials based on your strict quality standards?

Answer – T. M. Young (Grassland Fertilizers Limited)

1. In Ireland it took a long time to educate the major manufacturers (suppliers) about the specifications required for blending. They comply because they recognize the value of the additional sales they are able to make by meeting our standards. We also invite our suppliers to our plants and educate them regarding our system of fertilizer blending and the need for high-quality raw materials.
2. The suppliers do not charge extra for meeting our quality standards, however, they get the sales by meeting our standards.
3. Yes, we do rate our suppliers in accordance with the quality standards they meet.
4. Yes, we have reliable long-term sources of supply. High-quality granular fertilizer is the standard in Western Europe, and the major chemical producers are continually improving and upgrading their processes and product quality; as a result, we also benefit.

Question

All the existing blenders in the area appear to have one common interest, that is the need for reliable premium quality raw materials. With this in mind, would the region benefit by having an association of blenders to promote a total quality program with the common suppliers (as Grassland in Ireland has done) and to exchange educational materials and information?

Answer – Panel

The general observation of the panel members of the region was that such an association and common objective would not work (or be needed) due to the particular and diverse philosophies and criteria of the producers and customers in the Caribbean and Latin American region.

Question

1. In the Dominican Republic, what is the government's attitude toward the fertilizer industry?
2. What is the local sales/export sales ratio in the Dominican Republic, particularly at FERQUIDO?

3. What is the Japanese fertilizer tonnage donated yearly in the Dominican Republic?
4. There was a general impression at one time that both FERQUIDO and FERSAN were cutting export prices and even selling under cost to destroy the local Haitian bulk blender; is that correct?

Answer – M. Najri (FERQUIDO)

1. Being a private company, we at FERQUIDO have worked very close with government officials and institutions to enhance the technical level of the Dominican Republic fertilizer industry and fertilizer market. Maintaining a constant supply of fertilizer in the market is one of the main concerns of our industry. Our image is that we are a collaborating industry in a very political arena.
2. I hesitate to discuss the ratio of local and export sales in our company because this type of information may be confidential among our customers.
3. The Japanese-donated fertilizer varies between 5,000 tonnes and 10,000 tonnes annually.
4. Selling under cost is bad business. The difference in pricing that you mentioned may have been due more to short-term world market fluctuations than to a philosophy of selling below cost.

II. Fertilizer Blending and Compaction/Granulation – Technology and Operating Experience

Question

1. What is average bagged product storage time?
2. What is operating cost for compaction?
3. What is the electric power consumption in your compaction plant?

Answer – C. M. Rodriguez (Consultant, formerly with FERQUIGUA)

1. The normal storage time for bagged product at FERQUIGUA is 2 months; however, many products are stored less than this.
2. The cost of compaction at FERQUIGUA is about US $4/tonne more than bulk blending.
3. The power consumption for compaction at FERQUIGUA averages 13 kWh/tonne. Our original estimate was about four times this value.

Question

When choosing raw materials and formulations for compaction, how important is consideration of material compatibility and possible reactions after compaction? Do these considerations place restrictions on the product

range possible? Could you please give more detail on some of these restrictions?

Answer – C. M. Rodriguez (Consultant, formerly with FERQUIGUA)

Yes, there are about the same restrictions with compaction regarding compatibility as we observe with blending. Two of the most important mixtures to avoid are compacting TSP with urea and urea with calcium carbonate. When combining calcium carbonate ($CaCO_3$) with urea, we found a loss in nitrogen and in weight. Also, if a filler is required such as when producing 16-20-0, care must be taken to prevent segregation if blending is used; such a situation would favor compaction as it is easier to incorporate nongranular filler materials.

Question

Did you use any additive or special criteria to protect the life of the concrete used in your compaction facility?

Answer – C. M. Rodriguez (Consultant, formerly with FERQUIGUA)

Nothing special. However, the main concrete members are made of prestressed concrete. They were cast in a factory and transported to the field for erection. The concrete was not coated with any special paint or corrosion barrier. However, an impermeability agent was added to all concrete members of the structure.

Question

In your presentation you mentioned the many advantages of compaction; based on your experience at FERQUIGUA, what would you say are some of the disadvantages of this process? With regard to maintenance of the rolls, have you experienced wear on the roll surface and how often do you have to either resurface the rolls or change them?

Answer – C. M. Rodriguez (Consultant, formerly with FERQUIGUA)

The rolls were changed after 80,000 tonnes of production (product). Limestone, phosphate rock, and boron cause the most wear. The compactor forced-feed screws and other screw feeders in the process also show some wear. We no longer use limestone in our formulas so we expect the life of the new rolls to be extended beyond 80,000 tonnes of production. Otherwise, the compaction process seems to have no other disadvantages when compared with alternative granulation methods.

Question

1. Is there any reason for using compaction other than that the price of the raw materials are less and the color of the end product is uniform?

A uniform color can be obtained with a blend by spraying colored dust onto the blend.

2. What would happen if everybody moves to compaction and the demand for the cheaper raw materials goes up dramatically?

Answer – C. M. Rodriguez (Consultant, formerly with FERQUIGUA)

If prills and standard (nongranular) products are available then compaction makes sense. If granular products (raw materials) are not available, then compaction also makes sense. These points must be carefully evaluated on a case-by-case basis; it would be misleading to generalize.

Also, as indicated earlier, compaction complements blending and often makes blending more economical, especially when micronutrients are used.

Question

Have you experimented with any belt-type cooling systems that would cool the compacted flakes at such a rapid rate that the strength of the final product would be considerably higher than without such a cooling system?

Answer – W. Pietsch (KOPPERN Equipment, Inc.)

We have done no such tests and have no specific experience with this concept. We doubt that the improvement in product strength would warrant the cost of such a cooling system.

Question

I notice that sodium chloride (salt) is used as a raw material in your compaction plant (CFU) in Switzerland.

1. Do you use it as a source of Na or Cl?
2. For what end use is it necessary to add the salt?
3. What is the maximum amount of NaCl that is incorporated in a typical NPK fertilizer?

Answer – A. Sutter (Chemische Fabrik Uetikon – CFU)

Sodium chloride is used in fertilizers for pastures. Cattle like to eat the grass that has absorbed the salt, therefore it is used. It is added in the form of sylvite, NaCl/KCl, or raw rock salt.

The amount of salt added depends on the specific requirements and the formulation. One of our typical formulas contains 2% sodium (Na).

Question

1. How much dedusting agent is generally added to your compacted product at CFU (Switzerland) and what cost does it add to the product?
2. What kind of storage tests are made?

Answer – A. Sutter (Chemische Fabrik Uetikon – CFU)

We usually add 0.5-1.0% dedusting agent adding about US $0.3-$0.6 to the cost of a tonne of product.

The main storage test is storage under a prescribed load (pressure) for a certain period of time to determine the tendency of the fertilizer product to cake.

Question

1. What is the reason for producing formulas high in K_2O like 8-10-30-2 Mg in Switzerland.
2. Does the chemical composition of the fine (recycle) differ from that of the final product?

Answer – A. Sutter (Chemische Fabrik Uetikon – CFU)

1. The high K_2O fertilizer is for sugar beets.
2. In our compaction plant the chemical composition of the recycle does not differ from that of the product.

Comment – M. A. Swisher (FERQUIGUA)

In our compaction plant at FERQUIGUA the feed, recycle, and product are analyzed regularly, and we see no significant difference in the chemical composition between the recycle and product.

Question

Can you give a brief explanation of the system you use to reduce humidity in your warehouse for storage of raw materials at CFU and its operational cost?

Answer – A. Sutter (Chemische Fabrik Uetikon – CFU)

The bulk material warehouse is compartmentalized to reduce the surface of raw material exposed to the atmosphere. The exposed material surface is then covered with plastic sheet or tarps. There is no special humidity control system (equipment) and therefore no unusual operating cost except the labor and plastic sheeting required for keeping the material covered.

Question

1. With the surface of compacted product being irregular, how does one control dust resulting from the products rubbing together during handling and during bulk ocean shipments?
2. Does the hardness of such products increase if prilled urea is incorporated in the finished compacted product?

Answer – W. Pietsch (KOPPERN Equipment, Inc.)

1. Only compacted potash is shipped in bulk over long distances by rail and ship. Crushing of the potash sheet in impact mills prior to screening destroys all softer particles. Therefore, the final screened potash product has acceptable abrasion resistance to withstand international bulk transport.

   Multicomponent (NPK) fertilizers are compacted locally for distribution in relatively closely situated markets. Therefore, the requirement for abrasion resistance is not so high. If dust is a problem, dust suppressants can be applied.

2. Because all feed materials are milled (crushed) prior to compaction, urea prills are destroyed and a homogeneous mixture is obtained. The crushed urea is incorporated into the structure of the compacted material and therefore the properties of the original prills are of no importance. Generally speaking, urea acts like a binder and improves the quality (strength) of the granular product. When prilled urea is compacted alone (even without first crushing) to produce the large particles (briquettes) called supergranules, weighing 1-2 g, the resulting particles are very strong and difficult to break. Compaction of prilled urea alone to produce a granular product is difficult because the heat generated during compaction and granulation (crushing) causes the urea to become plastic and sticky.

Question

As I learned from Dr. Sutter's speech, at their compaction facility in Switzerland (CFU) they avoid the milling of raw materials as much as possible and still they succeed in the compaction process. At FERQUIGUA the story is different, for good compaction we need very fine mixtures, sometimes requiring the separate milling of certain raw materials. Can you explain the difference?

Answer – A. Sutter (CFU) and W. Pietsch (KOPPERN Equipment, Inc.)

The mill at CFU (Switzerland) is too small to allow milling of the entire feed. Therefore, only the coarse components are milled prior to compaction. Dr. Sutter of CFU agrees with you that it would be beneficial if the entire feed would be homogenized in a mill prior to compaction.

Furthermore, certain materials, for example, some byproduct ammonium sulfates, are sometimes contaminated on the surface. Because compaction of dry materials relies on physical interactions occurring on the particle surfaces, milling of such materials produces new uncontaminated

surfaces which are more easily bonded and therefore produce a stronger product.

Question

In view of metal corrosion in fertilizer plants, progress has been made in using materials such as fiberglass, concrete, wood, and other nonmetals. Do you see the possibility in the future of having a metal-free fertilizer plant?

Answer – D. M. Alt (A. J. Sackett & Sons Company)

No. However, concrete anu wood should be used whenever possible. Concrete columns and beams can be used to support hoppers and equipment. Plastic is used on some machinery parts such as flights on drag conveyors and for elevator buckets. Stainless steel is used more now than in the past for critical equipment previously constructed from mild steel.

Question

Please explain the criteria required for continuous blending compared with batch-type blending.

Answer – T. M. Young (Grassland Fertilizers Limited)

We like to run several hours on one grade with our continuous blending unit. We can make small runs (20-50 tonnes), but in our market this is not required. The batch-type blender is better suited for the small (5-20 tonne) batches of prescription-type mixtures so typical of the United States, and as I see, of this region of the world as well.

Question

What is the normal quantity of a production run in your compaction plant in Switzerland?

Answer – A. Sutter (Chemische Fabrik Uetikon – CFU)

A normal production run is about 50 tonnes.

Question

In Switzerland do you use ammonium nitrate or calcium ammonium nitrate (CAN) in your compaction plant formulations?

Answer – A. Sutter (Chemische Fabrik Uetikon – CFU)

No, for safety reasons we do not use nitrates in our compaction plant.

Question

How do you propose to obtain a more rounded granular particle from your compaction process? Are you planning to use special mills? If yes, what is their design? Are you planning to use some type of post-treatment? If yes, what kind of treatment?

Answer – C. Fayard (TECHNIFERT S.A.)

In addition to milling and screening, we developed two systems to further round the compacted particles:

1. A new design of the mill in the compaction unit.
2. Applying after compaction a slurry (recovered dust plus water) to the surface of the screened product. The slurry is applied in a coating/drying system that incorporates a rotary drum and a fluidized bed in one unit. The fluidized bed is heated with a stream of hot air to affect drying of the moist slurry film on the particle surface. After the application of the slurry and drying, the product is once again screened and then coated in a rotary drum prior to bagging.

III. Marketing Fertilizer in the Region

Question

1. What has your experience been with the compacted product caking and/or breaking down in the bags?
2. Has there been farmer resistance to the irregular particle shape of the compacted product?
3. You stated that blends have increased yields in Guatemala. Please elaborate.

Answer – C. M. Rodriguez (Consultant, formerly with FERQUIGUA)

1. If the product is too fine, the fines will cause caking. By increasing the product size, the problem of caking has disappeared.
2. Even though many claim the irregular particle shape to be a problem, we have not observed farmer resistance to our compacted products.
3. The increased yields with blends were due to the increased flexibility in formulation made possible by blending. For example, we have been able to provide more agronomically suitable formulas containing micronutrients, higher amounts of potash, and some chloride-free formulas.

Question

Looking at crop/soil requirements from the farmer's point of view, why would he want to pay more for a compacted product rather than use a bulk-blended product or his own mixture of straights? Are most fertilizers applied by hand in Guatemala?

Answer – C. M. Rodriguez (Consultant, formerly with FERQUIGUA)

The reasons for choosing a compacted product over a blend include convenience, less segregation, and the homogeneous and uniform incorporation of micronutrients.

In Guatemala, about 90% of the fertilizer is applied by hand and 10% by mechanical spreaders.

Question

As you are introducing blends to a new market in Colombia, what steps are you taking to maximize farmer acceptance?

Answer – F. Mayoral (Cargill Colombiana S.A.)

We have to move forward with education and promotion about our existence and the advantages of blending. Before we start, we plan to promote meetings with farmers, cooperatives, and federations. A soil testing program and the benefits of custom blending based on crop nutrient needs have to be developed and emphasized. Plot tests and field days and other farm-level demonstrations also have to be done.

Question

1. In your projections for future fertilizer demand in Colombia, what consideration do you give to the risks farmers face in selling their crops?
2. Do you offer credit to farmers? If so, what security do you require?

Answer – W. Bastian (Cargill, Incorporated)

1. Farmers do not face much difficulty in selling their crops in Colombia. Government and private channels exist for crop buying. Future expansion of crop production will be absorbed by the country or exported if there is a surplus. Export of crops can only be done through subsidies because internal prices are higher than international prices.
2. Recently we have started to give credit to retailers and big farmers. A letter of credit is a must in almost every case.

Question

In light of the extra charges associated with supplying fertilizers in bags to farmers, what are the prospects of handling and delivering fertilizer to the farmer in bulk?

Answer – Panel

In Guatemala this potential should be explored.

In Colombia the traditional technology is bagged fertilizer. Animal feed is already going in bulk; we expect fertilizer to follow in time. Long distance transport is a major problem with bulk. Bags cost about US $10/tonne but are worth US $7/tonne for reuse.

In Panama bulk movement is very expensive because of the special equipment required.

In Chile there are three factors against handling fertilizer in bulk: (1) small farms, (2) inadequate road infrastructure, and (3) timing of application is critical and bagged fertilizer makes this easier.

Question

In Jamaica, theft of fertilizer and theft of farmers' crops have imposed some serious constraints on farming and its economics. Is this a problem in neighboring countries?

Answer – Panel

In the Dominican Republic tobacco growers prefer "coded" bag marking to avoid theft. The use of unmarked bags defeats (works against) farmer education.

In the Dominican Republic there is no subsidy on fertilizer. Fertilizers that are marketed at cheap prices (below market price) are those financed through government-backed entities such as the Agricultural Bank or donated products which in many cases end up in the hands of those for which they were not intended.

In Colombia protection of crops is a normal part of farming.

Question

Can you elaborate on the distribution system used in Guatemala?

Answer – M. A. Swisher (FERQUIGUA)

There are about 300 small distributors of fertilizer throughout the country. They comprise about 40% of our sales. They are very traditional and have very little knowledge of fertilizers and how they are used. Their

specialty is logistics, since they also usually sell animal concentrates (feed), salt, sugar, cement, iron products, flour, and other such farm/consumer products.

Question

Does IFDC conduct courses on fertilizer dealer education and development?

Answer – R. S. Giroti (IFDC)

Yes, IFDC provides global and regional marketing training programs which include considerable information on dealer development. We would be pleased to develop a special dealer development program specific to the region, country, or specific crop production sector.

Dealer development programs must be location specific. FAO has developed, or is in the process of developing, a Dealer Training Guide. FADINAP (Bangkok) has developed a dealer training manual. These are very good resource materials for the development of dealer training programs elsewhere.

IV. Agronomic Factors Specific to the Region

Question

The very last slide indicated that compaction using phosphate rock mixed with urea and other nutrients gave results in an end product that are more efficient. My question is: Does the process of compaction make phosphate rock more soluble or did I misunderstand the slide and your explanation of the same?

Answer – L. A. León (IFDC)

Compaction does not increase the solubility of the phosphate rock. However, by mixing the phosphate rock with other more soluble phosphate materials (for example, TSP or DAP) helps the plant more quickly develop a healthy root structure. This in turn improves the uptake of the phosphate rock which is more slowly solubilized. A more complete explanation is given in the paper entitled "Agronomic and Economic Evaluation of Phosphorus Sources" which is included in these proceedings.

Question

1. How is phosphate rock reactivity affected by compaction?
2. Are there local results of experiments supporting your answer?

Answer – C. M. Rodriguez (Consultant, formerly with FERQUIGUA)

1. I doubt that the rock reactivity is significantly affected by compaction. We have observed that other more soluble compounds mixed together with the rock in the granule will dissolve fast leaving the rock in its original form.
2. We have observed good results with phosphate rock-containing compounds on sugarcane at pH ±6, rice at pH 5 with high aluminum, and coffee at pH 4 to 5.5.

Question

Your statement, "a pound of zinc is a pound of zinc," may not necessarily be true. Could you relate the efficiency of zinc oxide versus zinc sulfate versus zinc oxy-sulfates versus zinc chelates since these forms vary considerably in price.

Answer – J. M. Wyatt (Frit Industries, Inc.)

Placement, soil type, soil pH, and application method determine what chemical form is the most effective. Many tests show that the form is not as critical as the proper amount of the element. Many arguments are made about the efficiency of the various forms. One can correct some problems only by foliar application and many times chelates, indeed, do perform better. In soil-applied micronutrients, I believe the data are inconclusive that any chelate form used at 1/10 or 1/5 the rate of a oxy-sulfate will give as good or better results. When added during granulation with ammonia, the sulfate form of micronutrient will be converted to ammonium sulfate and the metal (micronutrient) oxide. Many chelates can also be destroyed by exposure to extreme pH changes usually encountered in granulation. My statement about "a pound is a pound" refers to the fact that if a crop needs a pound of an element, it needs it and changing the form will not change the amount required by the crop.

Question

1. Can you describe how your programs of research and extension are correlated with those of public supported (government) agencies and others?
2. In many countries soil and plant tissue analyses are simply sales gimmicks promoted by uninformed salesmen. Can you describe the program you use to relate soil tests to fertilizer needs and crop response?

Answer – M. A. Swisher (FERQUIGUA)

Basically, there is little give and take (collaboration) between ourselves and the government sector because they are our competitor.

Our marketing concept originally used independent soil test laboratories and still uses them. We have also developed this capability and will offer it in 1990. However, we do much work with well-managed export crop producers and with coffee farmers where lack of mutual trust is not a problem.

Question

What chemical forms of micronutrients are used? If several forms are used, explain under what conditions each is used?

Answer – M. A. Swisher (FERQUIGUA)

Almost all micronutrients used by FERQUIGUA are in the sulfate form. We import zinc sulfate, copper sulfate, iron sulfate, manganese sulfate, and boron (sodium borate). We also use some cocktails (oxide/sulfate mixtures) imported from the United States.

Question

Yesterday it was stated that phosphate rock has been used in perennial crops successfully. You mentioned that in Guatemala you are recommending it for vegetable crops. I wonder if the P_2O_5 is readily available for such crops. Please elaborate on this.

Answer – M. A. Swisher (FERQUIGUA)

Phosphate rock is only prescribed for use on acid soils, and since most vegetables are grown in alkaline soils, little phosphate rock is used on these crops unless the soil acidity allows.