PN-ABF-020

Pakistan Water and Power Development Authority

Lakhra Coal Mine and Power Generation Feasibility Study

Power Plant Feasibility

Volume VI

January 1986

Sponsored by

United States Agency for International Development

Prepared by

Gilbert/Commonwealth International, Inc.

LAKHRA COAL MINE AND POWER GENERATION FEASIBILITY STUDY

POWER PLANT FEASIBILITY

VOLUME VI

Submitted to

U.S. AGENCY FOR INTERNATIONAL DEVELOPMENT

and

PAKISTAN WATER AND POWER DEVELOPMENT AUTHORITY

By

Gilbert/Commonwealth International, Inc.
209 East Washington Avenue
Jackson, Michigan 49201

R-2748

January, 1986

LAHKRA POWER FEASIBILITY STUDY

TABLE OF CONTENTS

		Page
VOLUME I		
	EXECUTIVE SUMMARY	
1.0	INTRODUCTION	1-1
2.0	SCOPE OF STUDY	2-1
3.0	SYSTEM PLANNING AND COST ANALYSIS	3-1
3.1	FIRST SERIES OF GENERATION PLANNING STUDIES	3-1
3.2	SECOND SERIES OF GENERATION PLANNING STUDIES	3-10
3.3	LAKHRA TRANSMISSION SYSTEM STUDIES	3-18
3.4	IMPORTED COAL TRANSMISSION STUDIES	3-28
3.5	COST ANALYSIS FOR 300 MW UNIT SIZE	3-32
3.6	POST-STUDY REVISIONS - GENERATION AND TRANSMISSION PLANNING STUDIES	3-34
	APPENDIX 3.1 - WASP-3 Computer Generated Study Report, First Series of Generation Planning Studies	3-123
	APPENDIX 3.2 - WASP-3 Computer Generated Study Report, Second Series of Generation Planning Studies	3-179
	APPENDIX 3.3 - Load Flow and Transient Stability Plots	3-235
	APPENDIX 3.4 - Transmission System Cost Estimates	3-283
4.0	LAKHRA COAL CHARACTERISTICS	4-1
4.1	FUEL ANALYSES	4-1
4.2	COAL WASHABILITY ANALYSIS	4-9
4.3	FUEL SAMPLE COLLECTION AND SHIPMENT	4-21
4.4	TEST BURN, BASELINE PMDC NO. 2	4-31

LAHKRA POWER FEASIBILITY STUDY

TABLE OF CONTENTS
(Continued)

		Page
4.5	TEST BURN, WASHED PMDC NO. 2	4-39
4.6	TEST BURN, BT-11 TEST SHAFT	4-44
4.7	INVESTIGATION, "SIMILAR" ASH COAL TO LAKHRA ASH COAL	4-47
4.8	BOILER DESIGN PARAMETERS FOR LAKHRA COAL	4-51
5.0	POWER PLANT DESIGN CHARACTERISTICS	5-1
5.1	GENERAL	5-1
5.2	SITE SURVEYS	5-1
5.3	SITE PLANS	5-6
5.4	ENVIRONMENTAL GUIDELINES	5-11
5.5	BASIS OF DESIGN ANALYSIS (BODA)	5-55
5.5.1	Plan Layouts	5-55
5.5.2	Soils/Rock, Water, Climate Characterization	5-73
5.5.3	Fuel, Chemical, Raw Material, Wastewater Requirements	5-80
5.5.4	System Design	5-81
5.5.5	Equipment Specifications	5-84
5.5.6	Analysis of Environmental Control Technologies	5-86
5.5.7	Availability	5-97
5.5.8	Alternative Fuel Capabilities	5-100
5.5.9	Cooling Tower Considerations	5-105
5.6	CONSTRUCTION PHASE AND SCHEDULE CONSIDERATIONS	5-107

.3'

LAHKRA POWER FEASIBILITY STUDY

TABLE OF CONTENTS
(Continued)

		Page
VOLUME II		
6.0	INSTITUTIONAL DEVELOPMENT	6-1
6.1	INTRODUCTION	6-1
6.2	COAL POWER PROJECTS DEPARTMENT	6-6
6.3	PROJECT ORGANIZATION (DESIGN AND CONSTRUCTION)	6-56
6.4	PROJECT ORGANIZATION (START-UP AND TEST)	6-65
6.5	STATION ORGANIZATION (OPERATION AND MAINTENANCE)	6-71
	APPENDIX 6.1 - Organization Chart	6-79
	APPENDIX 6.2 - Job Descriptions	6-83
	APPENDIX 6.3 - Guidelines for Evaluation of Project Organizations, Major Construction Projects, and Support of Operations and Maintenance Activities	6-187
	APPENDIX 6.4 - G/C CUE	6-269
7.0	TRAINING	7-1
7.1	INTRODUCTION	7-1
7.2	WAPDA TRAINING CAPABILITIES AND ORGANIZATION	7-1
	7.2.1 Approach	7-1
	7.2.2 WAPDA Academy	7-2
	7.2.3 WAPDA Training Institutes	7-3
7.3	TRAINING NEEDS ASSESSMENT	7-6
	7.3.1 Approach	7-6
	7.3.2 Coal Power Projects Department	7-7

LAHKRA POWER FEASIBILITY STUDY

TABLE OF CONTENTS
(Continued)

			Page
VOLUME II CONT'D			
	7.3.3	Thermal Power Station Organization	7-8
	7.3.4	Training Institute Organization	7-10
7.4	PRELIMINARY TRAINING PLAN		7-11
	7.4.1	Organization	7-11
	7.4.2	Plan	7-15
	7.4.3	Estimated Cost	7-19
	APPENDIX 7.1 - Training Course Outlines		7-25
	APPENDIX 7.2 - Extract from PC-II Proforma; Training of WAPDA Officers 1985: Foreign Training Requirements of Generation		7-139
	APPENDIX 7.3 - Extract from USAID Participant Training Plans (Lakhra); FY-1985, Coal Power Station Proposed Training Fields		7-143
VOLUME III			
8.0	CAPITAL COSTS OF POWER PLANT		8-1
8.1	ESTIMATE BASIS		8-1
8.2	EXCLUSIONS		8-7
8.3	CAPITAL COST ANALYSIS		8-7
8.4	Coal Washing - Power Plant Cost Differential		8-9
8.5	Flue Gas Desulfurization Options		8-9
8.6	Operation and Maintenance		8-10
	APPENDIX 8.1 - Cost Details for the Khanot Site		8-25
9.0	CONCLUSIONS		9-1
10.0	RECOMMENDATIONS		10-1

LAHKRA POWER FEASIBILITY STUDY

TABLE OF CONTENTS
(Continued)

VOLUME IV

APPENDIX A - SPECIFICATIONS

MATERIAL SPECIFICATIONS

Chemicals
No. 2 Fuel Oil
No. 6 Fuel Oil
Limestone

MECHANICAL SPECIFICATIONS

M-1 Boiler Island
M-2 Turbine Generators and Accessories
M-3 Condenser
M-4A Electrostatic Precipitator
M-4B Wet Flue Gas Desulfurization System

VOLUME V

APPENDIX A - SPECIFICATIONS

MECHANICAL SPECIFICATIONS

M-5 Feedwater Heaters
M-6 Deaerator
M-7 Motor Driven Boiler Feed Pumps
M-8 Condensate Pumps
M-9 Circulating Water Pumps
M-10 Mechanical Draft Cooling Tower
M-11 Cycle Make-up Demineralizer System
M-12A Wastewater Treatment Equipment
M-12B Sanitary Wastewater Treatment System
M-13 High Pressure Power Piping and Hangers
M-14 Fly Ash Handling System (Vacuum Type)
M-15 Closed Circuit Cooling Water Heat Exchangers
M-16A Diesel Engine and Electric Motor Driven Fire Pump and Accessories
M-16B In-Plant and Yard Fire Protection

LAHKRA POWER FEASIBILITY STUDY

TABLE OF CONTENTS
(Continued)

VOLUME VI

APPENDIX A - SPECIFICATIONS

MECHANICAL SPECIFICATIONS

M-17 Low Pressure Piping
M-18 Traveling Water Screens

CIVIL/STRUCTURAL SPECIFICATIONS

S-1A Supply of Concrete
S-1B Concrete Work
S-2 Structural Steel
S-3 Turbine Room Overhead Crane
S-4 Coal Handling System
S-5 Circulating Water Piping
S-6 Reinforced Concrete Chimney with Brick Liners

ELECTRICAL SPECIFICATIONS

E-1 Motors Under 200 KW
E-2 Motors 200 KW and Over
E-3 Medium Voltage Switchgear
E-4 Motor Control Centers
E-5 Diesel Generator
E-6 Auxiliary Power Transformer
E-7 Step-Up Transformer

INSTRUMENTATION AND CONTROL SPECIFICATIONS

I-1 Instrumentation and Control System

VOLUME VII

APPENDIX B - DRAWINGS

SITE ARRANGEMENTS

Figure 5.3-1 Khanot Site, Plant Site General Arrangement
Figure 5.3-2 Khanot Site General Arrangement
Figure 5.3-3 Lakhra Site, Plant Site General Arrangement
Figure 5.3-4 Lakhra Site, General Arrangement

LAHKRA POWER FEASIBILITY STUDY

TABLE OF CONTENTS
(Continued)

PLANT ARRANGEMENTS

Figure 5.5.1-1 Ground Floor Plan
Figure 5.5.1-2 Mezzanine Floor and Misc. Floor Plans
Figure 5.5.1-3 Operating Floor Plan
Figure 5.5.1-4 Plant Cross Section
Figure 5.5.1-5 Longitudinal Cross Section

FLOW DIAGRAMS

Figure 5.5.3-1 Water Balance Diagram
Figure 5.5.3-2 Material Balance Diagram
Figure 5.5.4I-1 Turbine Heat Balance, SI Units
Figure 5.5.4I-2 Turbine Heat Balance, SI Units
Figure 5.5.4I-3 Turbine Heat Balance, English Units
Figure 5.5.4I-4 Turbine Heat Balance, English Units
Figure 5.5.4IX-1 Water Treatment Diagram
Figure 5.5.4XI-1 Auxiliary Steam Diagram
Figure 5.5.4XII-1 Compressed Air Diagram
Figure 5.5.4XVI-1 Fire Protection System Diagram
Figure 5.5.4XX-1 Coal Flow Diagram
Figure 5.5.4XX-1a Inplant Coal Flow Diagram

SINGLE LINE DIAGRAMS

Figure 5.5.4XXI-1 Generator and Station Power
Figure 5.5.4XXII-1 Emergency Power System

VOLUME VIII

APPENDIX C - SUPPLEMENTAL REPORTS

Roberts & Schuefer Co. Coal Washablility Analysis

GCII Geotechnical Investigation

WAPDA Ground Water Resistivity Survey at Khanot

APPENDIX D - WORK PLAN

VOLUME IX

COMBUSTION ENGINEERING TEST REPORTS

LIST OF TABLES

Number		Page
4.1-1	Fuel Analyses	4-71
4.1-2	Composite Drill Core Analyses, Unwashed Coal (Boiler Specification Basis)	4-73
4.1-3	Composite Drill Core Analyses, Washed Coal (Boiler Specification Basis)	4-74
4.2-1	Effects of Total Cleaning on Ash/Sulfur Removal and Btu Recovery (Seam Only)	4-75
4.2-2	Effects of Total Cleaning on Ash/Sulfur Removal and Btu Recovery (Seam + 10% Dilution)	4-76
4.2-3	Effects of Partial Cleaning on Ash/Sulfur Removal and Btu Recovery (Seam Only - 4" x 1/2" Cleaned, 1/2" x 0 Raw)	4-77
4.2-4	Effects of Air Drying on Ash/Sulfur Removal and Btu Recovery	4-78
4.2-5	Effects of Size Reduction on Ash/Sulfur Removal and Btu Recovery	4-79
4.2-6	Summary of Whole Coal Analyses	4-80
4.2-7	Raw Vs. Clean Indices	4-81
4.2-8	Sample Summary	4-82
4.2-9	Distribution Curve Determination	4-83
4.2-10	Summary of Whole Coal Analyses (Plant Run)	4-84
4.2-11	Raw Vs. Clean Indices (Plant Run)	4-85
4.2-12	Mass Balance Measurements and Determination	4-86
4.4-1	Test Fuel Analyses	4-87
4.4-2	Preliminary FPTF Results - Pulverized Characteristics	4-88
4.4-3	Lakhra Baseline Coal Evaluation Test Matrix	4-89
4.4-4	Preliminary FPTF Results	4-90

LIST OF TABLES

Number		Page
4.4-5	Preliminary FPTF Results	4-91
4.4-6	Lakhra Baseline Coal Furnace Slagging Results	4-92
4.4-7	Preliminary FPTF Results - Convective Pass Fouling Characteristics	4-93
4.4-8	Preliminary FPTF Results - In-Site Fly Ash Resistivity Measurement	4-94
4.4-9	Preliminary FPTF Results - Ash Loading, Gas Velocity, Erosion Rate	4-95
4.4-10	Lahkra Coal Corrosion Probe Results	4-96
4.5-1	Test Fuel Analysis for Lakhra Washed and Baseline Coal	4-97
4.5-2	Preliminary FPTF Pulverization Results	4-98
4.5-3	Lakhra Washed Test Matrix	4-99
4.5-4	Preliminary FPTF Results - Relative Combustion Characteristics	4-100
4.5-5	Preliminary FPTF Results - Furnace Slagging Characteristics	4-101
4.5-6	Lakhra Washed Coal Characterization, FPTF Slagging Results	4-102
4.5-7	Preliminary FPTF Results - Convective Pass Fouling Characteristics	4-103
4.5-8	Preliminary FPTF Results - In-Site Fly Ash Resistivity Measurement	4-104
4.6-1	Lakhra Coal Performance Characteristics	4-105
4.6-2	Lakhra Coal Sample Analyses	4-106
4.7-1	Similar Ash Coal Comparison	4-107
5.4-1	World Bank SO_2 Emissions Criteria	5-43
5.4-2	Threshold Limit Values (TLV) for Dusts	5-44
5.4-3	Summary of Major Power Plant Wastewater Discharges	5-46

LIST OF TABLES (Continued)

Number		Page
5.4-4	Selected Pollutants Often Associated with Power Plant Waste Streams	5-47
5.4-5	Effluent Guidelines for Power Plant Wastewater Discharge to Surface Waters	5-49
5.4-6	Guidelines for Drinking Water Quality (World Health Organization - 1984)	5-51
5.5.2-1	Ground Water Quality	5-76
5.5.2-2	Water Quality of Indus River	5-77
5.5.2-3	Discharge Characteristics of Indus River at Sehwan for the Years 1972-75 and 1979	5-78
5.5.2-4	Meteorological Summary Data from Hyderabad (1931-1960)	5-79
7.2.3	Training Courses Administered at Guddu Training Center	7-5
7.4.1	System Design Descriptions	7-14
7.4.3 (a)	Estimated Cost of Module 1000 Training Courses	7-20
7.4.3 (b)	Estimated Cost of Module 2000 Training Courses	7-21
7.4.3 (c)	Estimated Cost of Module 3000 Training Courses	7-22
7.4.3.(d)	Estimated Cost of Module 4000 Training Courses	7-23
8.1	Cost Summary for Lakhra Units 1 & 2 in U.S. Dollars	8-11
8.2	Cost Summary for Lakhra Units 1 & 2 in Rupees	8-12
8.3	Account Summary for Lakhra Unit 1 & 2 in U.S. Dollars	8-13
8.4	Account Summary for Lakhra Unit 1 & 2 in U.S. Dollars	8-16
8.5	Cash Flow for Lakhra Unit 1	8-18
8.6	Cost Summary for Khanot in U.S. Dollars	8-19
8.7	Cost Summary for Khanot in Rupees	8-20

LIST OF TABLES (Continued)

Number		Page
8.8	Account Summary for Khanot Unit 1 in U.S. Dollars	8-21
8.9	Account Summary for Khanot Unit 2 in U.S. Dollars	8-24
8.10	Cash Flow for Khanot Unit 1	8-26
8.11	SO_2 Emission, Option 2 - Washed Coal	8-27
8.12	SO_2 Emission, Option 3 - 1,000 TPD Site Emission Limit	8-28
8.13	SO_2 Emission, Option 4 - 750 TPD Site Emission Limit	8-29
8.14	SO_2 Emission, Option 5 -500 TPD Site Emission Limit	8-30
8.15	Comparison of Lakhra SO_2 Emission Options	8-31
8.16	Comparsion of Khanot SO_2 Emission Options	8-32
8.17	Lakhra Staffing Plan and Operation and Maintenance Annual Costs	8-33
8.18	Khanot Staffing Plan and Operation and Maintenance Annual Costs	8-36
8.19	Vendors Solicited for Budgetary Quotes	8-39
8.20	Prefabricated Process Piping International Pricing Comparison	8-40
4.2.1	PMDC Mine No. 2 Seam Cross Section	4-109
4.2.2	Characteristic Washability Curve 4" x 100M Size Fraction, Lakhra Field-PMDC Mine No. 2	4-110
4.2.3	Characteristic Washability Curve, 4" x 1-1/2" Size Fraction, Lakhra Field-PMDC Mine No. 2	4-111
4.2.4	Characteristic Washability Curve, 1-1/2" x 3/4" Size Fraction, Lakhra Field-PMDC Mine No. 2	4-112

LIST OF FIGURES

Number		Page
4.2.5	Characteristic Washablity Curve, 3/4" x 1/2" Size Fraction, Lakhra Field-PMDC Mine No. 2	4-113
4.2.6	Characteristic Washability Curve, 1/2" x 1/4" Size Fraction, Lakhra Field-PMDC Mine No. 2	4-114
4.2.7	Characteristic Washability Curve, 1/4" x 28M Size Fraction, Lakhra Field-PMDC Mine No. 2	4-115
4.2.8	Characteristic Washability Curve, 28M x 100M Size Fraction, Lakhra Field-PMDC Mine No. 2	4-116
4.2.9	Btu/lb. vs. Ash (4" x 100M - Seam Only)	4-117
4.2.10	Effects of Total Cleaning on Ash/Sulphur Removal and Btu Recovery	4-118
4.2.11	Total vs. Partial Cleaning and the Effect on Ash/Sulphur Removal and Btu Recovery (Seam Only)	4-119
4.2.12	Raw Coal Size Reduction Due to Air Drying	4-120
4.2.13	East Fairfield Coal Company Flowsheet	4-121
4.2.14	Distribution Curve for 2-1/2" x 28M Raw Coal Cleaned in Heavy Medium Cyclones	4-123
4.4-2	Lakhra Baseline Coal Evaluation	4-125
4.4-3	Lakhra Baseline Coal Evaluation	4-126
4.4-4	Lakhra Baseline Coal Evaluation	4-127
4.4-5	Lakhra Baseline Coal Evaluation	4-128
4.4-6	Lakhra Baseline Coal Evaluation	4-129
4.4-7	Lakhra Baseline Coal Evaluation	4-130
4.4-8	Lakhra Baseline Coal Evaluation	4-131
4.5-1	Lakhra Washed Coal Evaluation	4-132
4.5-2	Lakhra Washed Coal Evaluation	4-133

LIST OF FIGURES

Number		Page
4.5-3	Lakhra Washed Coal Evaluation	4-134
4.5-4	Lakhra Washed Coal Evaluation	4-135
4.5-5	Lakhra Washed Coal Evaluation	4-136
4.5-6	Lakhra Washed Coal Evaluation	4-137
4.7-1	Site Elevation B&W Boiler	4-138
4.7-2	Design Information B&W Boiler	4-139
4.7-3	Design Information CE Boiler	4-140
4.7-4	Coal Analysis CE Boiler	4-141
4.7-5	Design Information FW Boiler	4-142
4.7-6	Side Elevation FW Boiler	4-143
4.7-7	Coal Analysis FW Boiler	4-144
4.7-8	Ash Analysis FW Boiler	4-145
5.2.1	Lakhra Area Map	5-2
5.5.1.6-1	Coal Laboratory and Sample Preparation Area	5-64
5.6.2	Master Project Schedule	5-111
5.6.3	Progressive Manufacture of Boilers and Turbines in Pakistan	5-117
5.6.4	Letter in Reference to Progressive Manufacture of Boilers and Turbines in Pakistan	5-126
5.6.5	Letter in Reference to Local Manufacturing of Boilers/Turbine	5-129
5.6.6	Letter in Reference to Progress in Manufacture of Boilers in Pakistan	5-132
5.6.7	Letter in Reference to Progressive Manufacture of Boilers and Turbines in Pakistan	5-134

LIST OF FIGURES (Continued)

Number		Page
6.2.1	CPPD Responsibilities Throughout Project Phases	6-32
6.2.2	Recommended CPPD Head Office Staff Activities	6-33
6.2.3	Recommended Coal Power Projects Department Organization	6-51
6.2.4	Coal Power Projects Department; WAPDA Staffing Plan for Key Personnel	6-54
6.2.5	Summary of Base Salary Costs (Rupees)	6-55
6.3.2(a)	Lakhra Project Organization (Design and Construction)	6-57
6.3.2(b)	Lakhra Construction Management Organization	6-58
6.3.3	Construction Management Manual; Table of Contents	6-63
6.3.4	Project Organization (Design and Construction); WAPDA Staffing Plan for Key Personnel	6-64
6.4.2	Lakhra Project Organization (Start-up and Test)	6-66
6.4.3	Start-up Manual; Table of Contents	6-68
6.4.4	Project Organization (Start-up and Test); WAPDA Staffing Plan for Key Personnel	6-70
7.4.2(a)	Coal Power Projects Department; Preliminary Training Plan	7-16
7.4.2(b)	Project Organization (Design and Construction); Preliminary Training Plan	7-17
7.4.2(c)	Project Organization (Start-up and Test); Preliminary Training Plan	7-18

LIST OF EXHIBITS

No.		Page
3.1	Pakistan Planning Commission 1986-2005 Load Forecast Used in Generation Planning Studies	3-47
3.2	Fuel Cost Data Used in Generation Planning Studies	3-48
3.3	Fixed System Thermal Units	3-49
3.4	Fixed System Hydro Units	3-51
3.5	Earliest In-Service Dates for Various Types of Thermal Units Considered in the Generation Planning Studies	3-52
3.6	Variable System Thermal Additions	3-53
3.7	Variable System Hydro Additions	3-54
3.8	Summary of Capital Costs in Dollars/kW for Alternate Thermal Power Plant Additions	3-55
3.9	Summary of Capital Costs in Dollars/kW for Variable System Hydro Additions	3-56
3.10	First Series of WASP-3 Computer Studies, Optimum Generation Expansion Program for the WAPDA System	3-57
3.11	First Series of WASP-3 Computer Studies, Capacity Factors in Percent for Various Periods for the First Domestic Coal Unit	3-60
3.12	First Series of WASP-3 Computer Studies, Capacity Factors in Percent for Various Periods for Three Domestic Coal Units (300 MW Each) and Two Imported Coal Units (600 MW Each)	3-61
3.13	First Series of WASP-3 Computer Studies, Coal Consumption for the First Year of Operation for One 300 MW Domestic Coal Unit	3-62
3.14	Data for Alternate 300 MW Unit Additions	3-63
3.15	Summary of Capital Costs in Dollars/kW for Alternate 300 MW Unit Additions	3-64
3.16	First Series of WASP-3 Computer Studies, Comparison of Alternate Generation Expansion Plans	3-65

LIST OF EXHIBITS
(Continued)

No.		Page
3.17	First Series of WASP-3 Computer Studies, Cumulative Present Worth Through the Year 2005 vs. Coal Cost	3-67
3.18	Power Cost as a Function of Capacity Factor	3-68
3.19	Second Series of WASP-3 Computer Studies, Optimum Generator Expansion Program for the WAPDA System	3-69
3.20	Second Series of WASP-3 Computer Studies, Capacity Factors in Percent for Various Periods for the First Domestic Coal Unit (300 MW) (1990-1991)	3-71
3.21	Second Series of WASP-3 Computer Studies, Capacity Factors in Percent for Various Periods for Three Domestic Coal Units (300 MW Each) and Three Imported Coal Units (600 MW Each) (1999-2000)	3-72
3.22	Second Series of WASP-3 Computer Studies Comparison of Alternate Generation Expansion Plans	3-73
3.23	Second Series of WASP-3 Computer Studies, Cumulative Present Worth Through the Year 2005 vs. Coal Cost (300 MW Unit Size)	3-76
3.24	Typical Transmission System Characteristics	3-77
3.25	Approximate Power Plant Site Locations	3-78
3.26	Alternative Transmission Plans	3-79
3.27	Plan J.1 Jamshoro Substation One-Line Diagram	3-80
3.28	Plan J.2 Jamshoro Substation One-Line Diagram	3-81
3.29	Plan L.1/K.1 Lakhra/Khanot Substation One-Line Diagram	3-82
3.30	Plan L.1/K.1 Jamshoro Substation One-Line Diagram	3-83
3.31	Plan L.2/K.2 Lakhra/Khanot Substation One-Line Diagram	3-84
3.32	Plan L.2/K.2 Jamshoro Substation One-Line Diagram	3-85

17

LIST OF EXHIBITS
(Continued)

No.		Page
3.33	Three Phase Short Circuit Currents	3-86
3.34	Comparison of Lakhra Transmission Plans, Transmission Line Length and Major Sub-Station Equipment	3-87
3.35	Capital Costs of Lakhra Alternative Transmission Plans	3-88
3.36	Economic Comparison of Lakhra Transmission Alternatives	3-89
3.37	Computation of Transmission Losses from Lakhra/Khanot to Jamshoro	3-90
3.38	1991 Plan 1, 1 X 300 MW Imported Coal Unit	3-91
3.39	1991 Plans 2 and 2A, 1 X 600 MW Imported Coal Unit	3-92
3.40	1993 Plan 3, 2 X 600 MW Imported Coal Unit	3-93
3.41	1993 Plan 4, 2 X 600 MW Imported Coal Unit	3-94
3.42	Imported Coal 220 kV Substation, Plan 1	3-95
3.43	Imported Coal 220 kV Substation, Plan 2	3-96
3.44	Imported Coal 220 kV Substation, Plan 2A	3-97
3.45	Imported Coal 220 kV Substation, Plan 3	3-98
3.46	Imported Coal 500/220 kV Substation, Plan 4	3-99
3.47	Conceptual KESC 220 kV Substation with Connections to Import Coal Plant, Plan 1	3-100
3.48	Conceptual KESC 220 kV Substation with Connections to Import Coal Plant, Plans 2 and 2A and Plan 4	3-101
3.49	Conceptual KESC 220 kV Substation with Connections to Import Coal Plant, Plan 3	3-102
3.50	Jamshoro 500/220 kV Substation, Plans 1 and 2	3-103
3.51	Jamshoro 500/220 kV Substation, Plan 2A	3-104
3.52	Jamshoro 500/220 kV Substation, Plan 3	3-105

LIST OF EXHIBITS
(Continued)

No.		Page
3.53	Jamshoro 500/220 kV Substation, Plan 4	3-106
3.54	Capital Costs of Imported Coal Alternative Transmission Plans	3-107
3.55	Economic Comparison of Imported Coal Transmission Alternatives	3-108
3.56	Computation of Transmission Losses From Import Coal Plant to Jamshoro	3-109
3.57	Plant and Transmission Capital Costs, Comparison of Lakhra Alternatives	3-110
3.58	Plant and Transmission Capital Cost, Comparison of Lakhra Alternative, First Unit Only	3-111
3.59	Lakhra and Imported Coal Project Comparisons	3-112
3.60	Lakhra and Imported Coal Comparative Parameters, July 1985 Dollars	3-113
3.61	Diversified Maximum Demand at Generation Level (M)	3-114
3.62	Energy Requirement at Generation Level (GWH)	3-115
3.63	System Load Factor	3-116
3.64	Second Series of WASP-3 Computer Studies Generation Expansion Program with the Cost of 5100 Btu/lb Lakhra Coal Equal to $30.50/MT (1081 ¢/KCAL X 10^6)	3-117
3.65	Lakhra or Khanot 500 kV Substation for Two 350 MW Units	3-119
3.66	Capital Costs of Lakhra Alternative Transmission Plans for Two 350 MW Units	3-120
3.67	Plant and Transmission Capital Cost Comparison of Lakhra Alternatives for Two 350 MW Units Year of Expenditure Dollars	3-121

LAKHRA POWER FEASIBILITY STUDY

SPECIFICATION M-17

LOW PRESSURE PIPING

LPS/B1361/D1

20'

SPECIFICATION M-17

LOW PRESSURE PIPING

TABLE OF CONTENTS

Item	Title	Page
1.0	DESCRIPTION OF WORK	1
2.0	WORK INCLUDED	1
3.0	WORK NOT INCLUDED	1
4.0	APPLICABLE CODES AND STANDARDS	2
5.0	SUPPLEMENTAL DATA	3
6.0	VENDOR DATA	3
7.0	DESIGN REQUIREMENTS	4
8.0	PERFORMANCE REQUIREMENTS	5
9.0	MATERIAL REQUIREMENTS	5
10.0	FABRICATION AND ASSEMBLY REQUIREMENTS	10
11.0	INSTALLATION REQUIREMENTS - NONE	12
12.0	PERSONNEL REQUIREMENTS	12
13.0	INSPECTIONS AND TESTS	12
14.0	CLEANING, CORROSION PROTECTION AND COATING	13
15.0	MARKING AND IDENTIFICATION - NONE	14
16.0	PACKAGING AND SHIPPING	14
17.0	ACCEPTANCE CRITERIA	14

ATTACHMENTS

1. Power Piping Class Sheets
2. Power Pipe Line List
3. Weld End Preparation Schedule
4. Weld End Preparation Detail - Figures A and B
5. Instrument Taps, Thermowell and Nozzle Details - Figures C thru E

LAKHRA POWER FEASIBILITY STUDY
TECHNICAL SPECIFICATION M-17
LOW PRESSURE PIPING

1.0 DESCRIPTION OF WORK

The work to be performed consists of furnishing and delivering to the jobsite the low pressure piping systems for the 2 x 350 MW coal fired units at the Pakistan's Water and Power Development Authority (WAPDA) to be located in Pakistan.

2.0 WORK INCLUDED

The work to be performed shall include but not be limited to the following:

2.1 All piping materials.

2.2 Bypasses, open blows, vents, drains, and drip lines.

2.3 Welded joints.

2.4 Backing rings for both shop and field welds, including welds to valves and equipment.

2.5 Flanges, gaskets, and bolting materials.

2.6 Shop welding materials.

2.7 Insulation supports for vertical piping runs.

2.8 Field weld alignment clamps for heavy wall and large diameter piping.

2.9 Installation of thermowells, sample nozzles, and flow elements nozzles and other specialty items furnished by the purchaser.

3.0 WORK NOT INCLUDED

The following items are not included in the requirements of this Specification and will be furnished by others:

3.1 Valves.

3.2 Insulation.

3.3 Piping specialties including traps, strainers, air vents, vacuum breakers, flexible hoses, expansion joints, and sight flows.

3.4 Thermowells, flow elements and fluid sampling nozzles.

3.5 Piping hangers.

3.6 Welding rods and electrodes for field welding.

3.7 Stainless steel, copper or aluminum tubing, and fittings required for instrumentation work.

3.8 Lagging.

The following piping systems are excluded from the scope of this Specification.

3.9 Main steam, hot and cold reheat, boiler feedwater, and superheater spray water systems.

3.10 Buried piping.

3.11 Plumbing.

3.12 Building heating and air conditioning piping.

3.13 Specially coated (internally or externally) or lined piping.

3.14 Specialty piping such as used with ash conveying systems.

3.15 Large diameter piping such as used for condenser circulating water and auxiliary steam turbine exhaust.

3.16 Piping normally furnished with equipment.

3.17 Fire protection systems.

4.0 APPLICABLE CODES AND STANDARDS

The following codes and standards are applicable to the work to the extent specified herein:

4.1 American National Standards Institute (ANSI) standards B16.1, B16.3, B16.4, B16.5, B16.11, B16.14, and ANSI/ASME B31.1

4.2 American Society of Mechanical Engineers (ASME) Boiler and Pressure Vessel Code, Section IX

4.3 American Society for Testing and Materials (ASTM) Specification A-53, A-181-GR2, A-182, A-193GR-B7, A-216, A-217

4.4 American Petroleum Institute (API) Specification 5L

4.5 Manufacturers Standardization Society (MSS) Specification SP-25

4.6 Pipe Fabrication Institute (PFI) Standard ES-3, ES-5

4.7 Steel Structures Painting Council (SSPC) Specification PA1, SP6

4.8 Application of codes and standards referenced herein requires the application of the latest issue date and of all addenda adopted as of the date of the purchase order. Later revisions may be involved only by mutual agreement between Purchaser and Vendor.

5.0 SUPPLEMENTAL DATA

The documents listed on the contents page as attachments are applicable to the work to the extent specified herein.

6.0 VENDOR DATA

6.1 The Purchaser's Engineer will furnish to the Vendor one reproducible of each of the Purchaser's Engineer's Piping Drawings for a complete system for Vendor's use. The Vendor shall prepare shop detail sheets and isometrics for complete piping systems on as many sheets as the Vendor deems necessary. The details required on the Vendor prepared isometric sheets are outlined in Paragraph 6.2. These isometrics, when approved and released for fabrication by the Purchaser's Engineer, shall become the basis for the Vendor's fabrication of all piping materials.

6.1.1 The Purchaser's Engineer may furnish to the Vendor, for information and checking purposes, drawings of related equipment to which piping connections are to be made.

6.1.2 The Purchaser's Engineer may furnish to the Vendor drawings of general arrangement, stuctural steel and concrete work, and electrical work for Vendor's reference.

6.1.3 The Vendor shall prepare all necessary shop detail and isometric sheets for all systems in accordance with this Specification. Purchaser's Engineer's P&ID Diagrams and Piping Drawings show the pipe sizes and Power Piping Classes to be followed for each pipe line. Any exceptions, restrictions, or additions to the Power Piping Class will be noted on the Drawings.

6.1.4 The Vendor shall design the piping assemblies to minimize the amount of field fabrication while meeting the practical requirements of shipping, erection, and handling limitations.

6.2 PIPING ISOMETRICS

6.2.1 Detailed piping isometrics for all systems within the scope of this specificatin will ultimately be used for field erection. It is not the intent of the Purchaser's Engineer to specify a method of isometric production, rather to utilize the Vendor's standard method and incorporate certain specific requirements.

6.2.2 The Vendor shall prepare isometrics of piping systems based on the Purchaser's Engineers piping drawings and submit one sepia of each isometric to the Purchaser's Engineer for approval. The Vendor shall submit all isometrics for complete systems at one time. No partial submission will be accepted. Each isometric shall incorporate the following:

6.2.2.1 Size:

Vendor's standard size, but not to exceed 760mm x 760mm (30"x30").

6.2.2.2 Details:

The piping isometrics shall show (a) pipe spool piece numbers, (b) shop weld locations, (c) pipe reference location (elevation, at least one column row intersection, and a north arrow), (d) field weld location with a 5mm x 13mm (3/16"x1/2)" box for a field weld number, (e) flow direction arrow, (f) instrumentation tap locations, and Purchaser's Engineers identifying number, (g) valve location, dimension, and Purchaser's Engineer's identifying number, and (h) Vendor furnished loose material. All of the above items are available to the Vendor from the Purchaser's Engineer's piping drawings except Items (a), (b), (d), and (h).

7.0 DESIGN REQUIREMENTS

The piping systems shall be designed to operate under the following requirements and have the following features.

7.1 GENERAL

7.1.1 All piping will be purchased on a Unit Price basis and shall be fabricated in accordance with the piping drawings released to the Vendor for fabrication.

7.1.2 The Vendor shall furnish, fabricate into assemblies, examine, test, clean, and deliver all power piping systems of 65mm (2 1/2 inch) nominal pipe size and larger, except as excluded by Section 3.9 through 3.17. Included shall be all gaskets, flange bolting, and backing rings for field welds. In addition,

Purchaser's Engineer may have some 50mm (2 inch) and smaller piping shop fabricated when special fabrication processes are required that are normally not available at the plant site.

7.1.3 The agreed upon unit price structure shall be applicable to all materials and shop operations required for piping systems not yet detailed.

7.1.4 The following tables are attached and hereby made a part of this Specification and delineate the scope of work, materials of construction, and design requirements of the piping systems:

Table 1 Power Pipe Line List
Table 2 Weld End Preparation Schedule

8.0 PERFORMANCE REQUIREMENTS

The low pressure piping when installed and functioning shall be guaranteed for the following:

8.1 Fabricated to the sizes and dimensions shown on the Purchaser's Engineer's Drawings and within the tolerances of PFI Standard ES-3.

8.2 Fabrication of materials in compliance with the Purchaser's Engineer's specifications.

8.3 Fabricated, heat treated, examined, cleaned, and prepared for shipment in compliance with the Purchaser's Engineer's specifications.

8.4 Furnished in compliance with all codes, standards, laws, and regulations.

9.0 MATERIAL REQUIREMENTS

The material furnished shall be in accordance with the following requirements:

9.1 LOW PRESSURE PIPING MATERIALS

9.1.1 Pipe dimensions shall be in accordance with PFI Standard ES-3. Dimensional tolerances for rolled plate pipe shall be in accordance with the ASTM Specification A-53.

9.1.2 Carbon steel pipe, tube, and plate shall be furnished in the hot finished condition.

9.1.3 Ferritic alloy steel pipe, tube, and plate shall be furnished in the fully annealed condition.

9.1.4 API Specification 5L for seamless pipe may be substituted for corresponding grades of ASTM Specification A53.

9.2 BUTT WELDING TYPE FITTINGS

9.2.1 Butt welding type fittings shall be used for all nominal piping sizes 65mm (2 1/2") and larger unless otherwise noted on the Drawings. Some applications may require butt welding type fittings for smaller size; such instances will be noted on the Drawings.

9.2.2 The wall thickness of the fitting shall be at least equal to that corresponding to the wall thickness of the joining pipe. The pressure-temperature rating of the fitting shall be at least equal to that corresponding to the pressure-temperature rating of the joining pipe after due consideration has been given to any fitting weld joint efficiency, casting quality factors and local reinforcement requirements.

9.2.3 Cast fittings shall not be used unless specifically approved by the Purchaser's Engineer. Any casting furnished shall be in the annealed or normalized and tempered condition.

9.3 SOCKET WELDING TYPE FITTINGS

Socket welding type fittings shall be supplied for all nominal piping sizes 50mm (2") and smaller unless otherwise noted on the Drawings.

9.4 FLANGES

9.4.1 The raised face shall be removed from steel flanges when mating to 125 lb cast iron, bronze, or stainless steel flanges. Raised face steel flanges may be used when mated to 250 lb cast iron flanges.

9.4.2 The contact face of steel flanges shall have a serrated finish either spiral or concentric, in accordance with ANSI B16.5.

9.4.3 Welding neck type flanges shall be bored smooth to match the joining pipe schedule. Welding neck orifice flanges shall have the inside surface of the weld joint ground flush or bored smooth with the pipe internal.

9.4.4 Only welding neck type flanges with flat faces shall be used when mating to rubber expansion joints or wafer style resilient-lined butterfly valves.

9.4.5 Flanges shall be attached with bolt holes straddling the horizontal and vertical centerlines.

9.4.6 Flanges shall be drilled, faced, and spot faced or back faced.

9.4.7 The contact face of 125 lb flanges shall have a smooth machined finish as produced by turning, milling, planing, or other accepted practice. 250 lb flanges shall be either smooth or have a serrated finish with not less than 16 serrations per inch, either spiral or concentric.

9.5 FLANGED FITTINGS

9.5.1 Cast iron and steel flanged fittings shall be used only where specifically noted on the Drawings.

9.5.2 Cast steel flanged fittings shall conform to ASTM Specifications A216 and A217 and ANSI Standard B16.5.

9.5.3 Cast iron flanged fittings shall conform to ANSI Standard B16.1.

9.6 SCREWED FITTINGS

9.6.1 If a Drawing indicates screwed fittings, the fittings shall meet the following requirements.

9.6.2 Forged carbon steel fittings shall conform to ASTM Specification A181 Grade 2, and forged alloy steel fittings shall conform to ASTM Specification A182. Material composition shall match the material of the connecting pipe.

9.6.3 Forged steel fitting dimensions shall conform to ANSI Standard B16.11.

9.6.4 Forged steel screwed fittings are limited to the following maximum pipe schedules for joining pipe.

Fitting Rating	Maximum Pipe Schedule
3000 lb	80
6000 lb	XXS

9.6.5 Malleable iron screwed fittings shall conform to ANSI Standard B16.3.

9.6.6 Cast iron screwed fittings shall conform to ANSI Standard B16.4.

9.6.7 Iron plugs and bushings shall conform to ANSI Standard B16.14. Cored plugs may be used with 125 lb and 150 lb fittings. Solid plugs shall be used with 250 lb and 300 lb fittings. Plugs 80mm (3") and smaller shall have square heads whereas plugs 100mm (4") and larger shall be the bar type. Bushings shall be the hexagon style.

9.6.8 Street elbows and service tees shall not be furnished unless approved by the Purchaser's Engineer.

9.7 UNIONS

9.7.1 Unions, where indicated on the Drawings, shall be forged carbon steel with ground seat joint and U.S. Standard V-threads on a cadmium plated union nut. Screwed 2000 lb rated Schedule 80 unions with bronze seat shall be used with Power Piping Class 120CS. 3000 lb union with ground steel seats shall be used for other Power Piping Classes.

9.7.2 Socket welding type unions shall be used where socket welding type fittings are being used. Likewise, screwed unions shall be used with screwed fittings.

9.7.3 Unions are limited to 40mm (1 1/2") maximum size. Flanged joints shall be used for larger sizes.

9.7.4 Orifice unions shall contain an orifice plate of stainless steel, and the hole size shall be indicated on the exterior of the union. Marking of unions shall conform to MSS Standard Practice SP-25. Purchaser's Engineer shall approve the manufacturer of unions.

9.8 BOLTING

9.8.1 Coarse Thread Series shall be furnished for bolting 25mm (1") diameter and smaller. Larger sizes shall have the 8-Pitch Thread Series. Threads shall be formed after heat treatment for bolting of ASTM Specification A193 Grade B7.

9.8.2 Headed bolts, where allowed, are limited to 40mm (1 1/2") diameter and smaller. Bolt-studs shall be furnished for larger sizes.

9.8.3 Bolting diameters, lengths, and quantities shall conform to ANSI Standard B16.1 for cast iron joints and B16.5 for steel joints.

9.8.4 The Vendor shall furnish at least 5 percent surplus of bolting materials for each diameter and length required.

9.9 GASKETS

9.9.1 Purchaser's Engineer will approve the manufacturer of the gaskets.

9.9.2 Gaskets for oils shall be of the following materials:

9.9.2.1 Vellumoid, ring type, for conditions not exceeding 121°C (250°F) or 689.5 KPa (100 psig).

9.9.2.2 Vellumoid Velbestos 170-1 or Garlock Style 7021, ring type, for higher conditions.

9.9.3 Gaskets for acid shall be solid TFE fluorocarbon resin (Teflon) ring type.

9.9.4 The Vendor shall furnish at least 10 percent surplus of gasket materials for each size and type required.

9.10 SPECIAL FABRICATION REQUIREMENTS

The following piping systems shall be fabricated in accordance with the standard Piping Power Classes and with certain exceptions, restrictions, or additional requirements as listed below:

9.10.1 Turbine Lube Oil Purification

9.10.1.1 Any screwed joints shall be made with extra-strong pipe.

9.10.1.2 Gaskets shall be ring type Vellumoid.

9.10.1.3 Piping shall be acid cleaned, neutralized, rinsed, dried, internally coated with an oil soluble, light duty, film type rust preventative, capped for shipment, boxed and painted externally.

Caution:

Future cutting or welding of the piping could be hazardous and difficult; therefore, consideration should be given to type and location of joints.

9.10.2 Fuel Oil Supply

9.10.2.1 Any screwed joints shall be made with extra-strong pipe.

9.10.2.2 Gaskets shall be ring type Vellumoid for conditions not exceeding 121°C (250°F) of 100 psig. For higher temperature or pressure conditions, gaskets shall be ring type Vellumoid Velbestos 170-1 or Garlock Style 7021.

Caution:

Future cutting or welding of the piping could be hazardous and difficult; therefore, consideration should be given to type and location of joints.

9.10.3 Miscellaneous Gases

Refer to ANSI/ASME B31.1c-1984 for guidelines and procedures for toxic and flammable liquified gas piping.

10.0 FABRICATION AND ASSEMBLY

10.1 GENERAL REQUIREMENTS

10.1.1 Pipe flanges and other contact surfaces shall be concentric and perpendicular to the piping axis.

10.1.2 All materials welded to or into the piping assemblies shall be of a material compatible with the base material of the pipeline. This requirement includes such items as backing rings, reinforcing plate, hanger lugs or insulation support lugs.

10.1.3 Field welds shall be located by the Vendor so as to be readily accessible and not be hindered by building steel.

10.1.4 The Vendor shall shop install all Purchaser's Engineer's supplied weld-in type flow nozzles and weld-in type thermowells. Flow nozzles and thermowells shall be installed in strict accordance with the flow nozzle Vendor's instructions.

10.2 THERMAL CUTTING

Thermal cutting shall be performed under the same conditions of preheat and postheat required for welding as specified in ANSI/ASME Standard B31.1c. Postheat may be omitted when:

10.2.1 The heat affected zone produced by thermal cutting is removed by mechanical means immediately after cutting. However, in any case, all remaining slag, scale or oxides shall be removed by grinding away to bright metal at least 1.5mm (1/16") beyond the affected area.

10.2.2 Thermal cutting is part of a fabrication or manufacturing sequence leading to a weld end preparation where welding follows immediately.

10.3 WELDING

10.3.1 Weld end preparation for all field welds shall be in accordance with Figure A and Figure B, "Weld End Preparation Detail."

10.3.2 The edges or surfaces of the parts to be joined by welding shall be thoroughly cleaned of all rust, scale, grease, oil, paint, or any condition which may be detrimental to the quality of the completed joint.

10.3.3 The welding procedures shall be qualified to comply with the requirements of Section IX of the ASME Boiler and Pressure Vessel Code. Preheating and postheating shall be made in compliance with the requirements of ANSI/ASME Standard B31.1c.

10.4 BRANCH CONNECTIONS

10.4.1 Welding tees, wyes, crosses and laterals shall be used for branch connections for piping of heavy wall construction provided that outlet size is at least 1/3 the run size.

10.4.2 All full size branch connections shall be made with welding fittings of tees or crosses.

10.4.3 Nozzle branch connections shall be adequate for all imposed loadings by virtue of either extra thick branch wall thickness or reinforcing plates or rings welded into the joint area. The reinforcement shall fit the outside contour of the pipes by making contact at all points. Nozzles for safety valves shall be designed by the Vendor in accordance with the nonmandatory Appendix II to ANSI/ASME B31.1c "Design of Safety Relief Valve Nozzles." Safety valve reactions will be furnished later by the Purchaser's Engineer.

10.4.4 The inside of both main and branch pipes shall be visually checked for pipe or weld protrusion and trimmed flush if protrusions are found. All branch connnections shall be attached by full penetration welds. Each branch end, socket weld bore, and threaded tap shall be checked for roundness after completion of fabrication to assure proper fit with connecting pipe.

10.4.5 Connections 65mm (2 1/2") and larger shall have butt welding ends. Connections 50mm (2") and smaller shall have socket welding ends unless otherwise noted on Drawings or threading is required for instrumentation or inspection purposes.

10.4.6 Reducing branch connections to pipe may be made by either shaped nozzles or by use of special forged bosses.

10.4.7 Connections for thermowells shall be drilled.

10.5 HEAT TREATMENT

10.5.1 Stress relieving of carbon steel shall be accomplished by furnace heating to a 593°C (1100°F) metal temperature and holding for 1 hour per inch of thickest wall section, but at least 1 hour. Furnace cooling to 316°C (600°F) shall be followed by room cooling in still air no colder than 10.0°C (50°F).

10.5.2 Heat treating furnaces shall be large enough to hold complete piping assemblies without flame impingement on metal surfaces. Pipe interiors shall be protected against scaling. Recording potentiometers shall be used to assure temperature control.

10.5.3 After heat treatment, inside and outside scale shall be removed by grit blasting, pickling, or power driven wire brushes.

11.0 INSTALLATION REQUIREMENTS

None

12.0 PERSONNEL REQUIREMENTS

All welding shall be done by welders qualified in accordance with the requirements of the ASME Boiler and Pressure Vessel Code, Section IX.

13.0 INSPECTIONS AND TESTING

13.1 All costs associated with shop testing and examination by suppliers and fabricators, and any repeat testing and examination to prove compliance, shall be the responsibility of the Vendor.

13.2 To ensure compliance, all material and work shall be tested and examined in accordance with the requirements of the material and product specifications and ANSI/ASME B31.1c.

13.3 Five copies of the Vendor's Standard Certificate of Inspection shall be furnished to the Purchaser's Engineer.

13.4 All materials and any item covered by this Specification shall be subject to inspection by the Purchaser's Engineer at no additional cost to the Purchaser. The Purchaser's Engineer's inspection shall not relieve the Vendor of any inspection normally conducted by the Vendor during fabrication or of any contractural responsibilities.

13.5 Any workmanship or materials by the Vendor found faulty at the plant site by examination by the Purchaser shall be repaired or replaced by the Purchaser at the Vendor's expense after notifying the Vendor of fault and correction action required and allowing 72 hours for field inspection by the Vendor.

13.6 The Purchaser's Engineer shall at all times have free access to the Vendor's shops and to the following records which shall be kept and made available to the Purchaser's Engineer:

13.6.1 Operator's qualification tests.

13.6.2 Welding procedures.

13.6.3 Operator's identification for all weld joints.

13.6.4 Heat treatment given to all piping.

13.6.5 All radiographic inspections made.

13.6.6 Report of any repairs and subsequent inspection.

13.7 The Purchaser's Engineer's Inspectors will have the authority to refuse "release for shipment" if all requirements of approval drawings, procedures, specification, purchase documents, and codes or standards have not been fulfilled or if certified copies of required inspection and test reports are not available for review.

14.0 CLEANING, CORROSION PROTECTION AND COATING

14.1 The interior of all piping shall be cleaned to the minimum requirements of PFI Standard ES-5 except where more stringent requirements are specified below.

14.2 The exterior of all piping shall present a workmanlike appearance; shall be free of sand, loosely adhering scale, dirt, and other foreign matter prior to painting; and the exterior of all carbon steel and low alloy steel piping shall be painted with one coat of red oxide paint applied in accordance with SSPC Specification PA1 "Shop, Field, and Maintenance Painting".

14.3 Critical piping systems shall be shop internally cleaned by grit blasting with an angular silicon carbide or steel grit (sandblasting is prohibited) to the requirements of SSPC Specification SP6 "Commerical Blast Cleaning".

The residue shall be completely blown out with compressed air and visually inspected for cleanliness. The piping shall be carefully sealed for shipment. Critical piping sytems include condensate (condenser to boiler feed pumps), extraction steam, auxiliary steam, and reheat spray water.

All machined ends, pipe taps, and flange faces shall be coated with an oil free rust inhibitor which does not require field cleaning prior to field welding or assembly. The inhibitor brand shall be approved by the Purchaser's Engineer.

14.4 Any stainless steel piping shall not be painted or coated with oil or grease but rather wrapped in Kraft paper, polyethylene, or crated.

14.5 All lube oil piping shall be pickled and after painting, crated per the procedures outlined in "Cleanliness of Turbine Lube Oil Systems" which was presented at the 1975 American Power

Conference. The Vendor's procedure shall have the approval of the Purchaser's Engineer.

15.0 MARKING AND IDENTIFICATION

NONE

16.0 PACKAGING AND SHIPPING

16.1 Effective safeguards shall be used to protect the piping during transit and outdoor storage:

16.2 All open pipe ends and connections shall be capped or plugged to prevent the entry of dirt and foreign material.

16.3 Welding ends machined for solid backing rings shall be protected by a plywood or hardboard liner disc held securely against the beveled end by a metal cap which has been securely banded or taped to the pipe.

16.4 Other machined welding ends need only be protected by the metal cap without the liner disc.

16.5 Flange faces shall be protected by a solid plywood or hardboard disc, matching the outside diameter of the flange, and securely mated to the flange face.

16.6 All pipe taps and socket wells shall be securely plugged with wooden or plastic plugs.

16.7 Random fittings shall be shipped in crates, cartons, or bags suitable for maintaining cleanliness during shipment and storage.

17.0 ACCEPTANCE CRITERIA

17.1 The Vendor shall submit the sepias for approval to the Purchaser's Engineer. The Purchaser's Engineer will check the sepia submitted for approval by the Vendor. The Purchaser's Engineer will return the sepia to the Vendor approved for fabrication within 3 weeks.

17.2 The Vendor will incorporate the comments and information on the marked up sepia received from the Purchaser's Engineer onto one mylar reproducible, without creases or folds, marked "Certified for Fabrication" and return the mylar to the Purchaser's Engineer within 2 weeks.

ATTACHMENT 1

POWER PIPING CLASSES

POWER PIPING CLASS	120CS
POWER PIPING CLASS	150AS
POWER PIPING CLASS	150CS
POWER PIPING CLASS	150SS
POWER PIPING CLASS	250CS
POWER PIPING CLASS	300AS
POWER PIPING CLASS	300CS
POWER PIPING CLASS	600AS
POWER PIPING CLASS	600CS
POWER PIPING CLASS	900AS
POWER PIPING CLASS	900CS
POWER PIPING CLASS	1500AS
POWER PIPING CLASS	1500CS

PIPING CLASS 120CS

Piping:	50mm (2") and smaller - ASTM A 53 Gr B or ASTM A 106 Gr B, seamless, schedule 80.
	65mm (2 1/2") to 250mm (10") - ASTM A 53 Gr B or ASTM A 106 Gr B, seamless, schedule 40.
	300mm (12") to 600mm (24") - ASTM A 106 Gr B, standard weight.
Fittings:	50mm (2") and smaller - 3,000 lb forged carbon steel, socket-welded or threaded, ASTM A 105.
	65mm (2 1/2") and larger - butt weld, ASTM A 234, Gr WPB, same thickness as pipe.
Flanges:	Class 125, or Class 150, flat face.
Gaskets:	Water - 1.5mm (1/16") red rubber, full face, up to 66°C (150°F). Above 66°C (150°F) use 150 lb composition asbestos.
	Oil - 150 lb vellumoid or equal.
	Steam or air - composition asbestos.
Bolts:	Bolts and studs - ASTM A 307, Gr B. Above 204°C (400°F), ASTM A 193 Gr B7 (28mm-1 1/8" and larger use 8-pitch thread).
Nuts:	ASTM A 563 Gr A. Above 204°C (400°F), ASTM A 194 Gr 2H (28mm-1 1/8") and larger use 8-pitch thread).
Unions:	3,000 lb forged steel ASTM A 105, bronze to steel seat, cadmium plated union ring. Ends may be socket welded or threaded as necessary.
Valves:	125 lb rating, ASTM A 126 Class B, or bronze per ASTM B 61.

PIPING CLASS 150AS

Definitions:	Low alloy - 1 1/4% Cr, 1/2% Mo, ASTM A 335-P11
	Intermediate Alloy - 2 1/4% Cr, 1% Mo, ASTM A 335-P22
Pipe:	50mm (2") and smaller - ASTM A 335, Gr P11, Schedule 80.
	65mm (2 1/2") and larger - ASTM A 335, Gr P11, standard weight.
Fittings:	50mm (2") and smaller - ASTM A 182 Gr F11, 3,000 lb socket weld.
	65mm (2 1/2") and larger - ASTM A 234 Gr WP11, standard weight butt weld.
Flanges:	50mm (2") and smaller - ASTM A 182 Gr F11, 150 lb class, socket weld.
	65mm (2 1/2") and larger - ASTM A 182 Gr F11, 150 lb class, butt weld.
Unions:	40mm (1 1/2") and smaller - Forged steel, ASTM A 182, Gr F11, 3000 lb socket weld
Gaskets:	Spiral wound stainless steel/asbestos, Flexitallic Style CG or equal. Spiral winding to be 304 S.S. up to 427°C (800°F), 316L S.S. above 427°C (800°F).
Bolts:	25mm (1") and smaller - bolts, square or heavy hexagon, ASTM A 193, Gr B7, Class 2A.
	(28mm-1 1/8" and larger use 8-pitch thread).
Nuts:	Semifinished heavy hex, ASTM A 194, Grade 2H, Class 2B.
Valves:	50mm (2") and smaller - 600 lb, ASTM A 182 Gr F11 of F22, socket weld; either fixed or loose back. Seat type, stellite trim; gates and globes: outside screw and yoke (OS&Y), pressure seal; integral, welded or flanged bonnets; check valves shall be lift check type; and solid wedge gate valves.

PIPING CLASS 150AS
(Continued)

65mm (2 1/2") and larger - 150 lb, ASTM A 217 Gr WC6 or WC9, flanged or butt weld; bolted bonnets or covers; solid or flexible wedge outside screw and yoke (OS&Y), stellite seat ring; 12 percent chrome disc; check valves swing type, globe valves designed for pressure under the seat; 200mm (8") and larger - globe valves with gear operator. 300mm (12") and larger gate valves with gear operator.

Weld End Preparation:

50mm (2") and smaller - square cut, reamed, and deburred

65mm (2 1/2") and larger - see "Weld End Preparation Detail," Attachment 4, Figure A

Backing Ring for Field Butt Welds:

Alloy steel solid machined ring to suit weld end preparation.

Nondestructive Examination:

Per requirements of Table 136.4 in current edition of ANSI/ASME B31.1.

PIPING CLASS 150CS

Pipe: 50mm (2") and smaller - seamless ASTM A 106 Gr B or A 53 Gr B Schedule 80.

65mm (2 1/2") through 250mm (10") - seamless ASTM A 106 Gr B or A 53 Gr B Schedule 40.

300mm (12") through 600mm (24") - seamless ASTM A 106 Gr B, standard weight.

650mm (26") and larger - rolled and welded ASTM A 672 Gr A55, standard weight.

Fittings: 50mm (2") and smaller - 3,000 lb socketweld, ASTM A 105.

65mm (2 1/2") and larger - butt weld, standard weight, ASTM A 234 Gr WPB.

Flanges: 50mm (2") and smaller - 150 lb socketweld, raised face, ASTM A 105.

65mm (2 1/2") through 600mm (24") - 150 lb, weld neck, raised face, ASTM A 105.

600mm (24") - 150 lb, weld neck, raised or flat face, ASTM A 105 or ASTM A 181 Class 70, bored to match pipe.

650mm (26") and larger - butt weld, standard weight (13mm-0.500" wall) ASTM A 234 Gr WPB or WPBW.

Branch Connections:

50mm (2") and smaller - sockolet, ASTM A 105, 3,000 lb, X.S.

65mm (2 1/2") and larger - nozzle weld.

Use tees for branch connections the same size as run. In general use weldolets where branch connections are at least one pipe size smaller.

Instrument Connections:

Refer to "Branch Connection/Instrument Tap," Figure C; "Weld in Thermowell," Figure D; and "Fluid Sample Nozzle Installation," Figure E.

PIPING CLASS 150CS
(Continued)

Unions:	50mm (2") and smaller - 3,000 lb socket weld, ASTM A 105, integral seal, ground joint. 65mm (2 1/2") and larger - use flanges.
Gaskets:	Water - 3mm (1/8") red rubber, full face or ring type up to 65°C (150°F), above 65°C (150°F) 150 lb flexitallic Style CG or equal. Oil - 1.5mm (1/16",) 150 lb vellumoid, or equal. Steam - 3mm (1/8") thick, 150 lb, Flexitallic Style CG or equal, Canadian asbestos gasket filler for water and steam below 427°C (800°F), Type 304 stainless steel gasket metal. Glycol - 3mm (1/8") thick, 150 lb, Flexitallic Style CG or equal.
Bolts:	Bolt studs - ASTM A 307 Gr B. Above 400°F, ASTM A 193, Gr B7, Class 2A, 28mm (1 1/8") and larger use 8-pitch thread).
Nuts:	Semifinished heavy hexagon, ASTM A 194 Gr 2H, Class 2B, (28mm 1 1/8" and larger use 8-pitch thread).
Valves:	50mm (2") and smaller - 600 lb forged carbon steel; ASTM A 105; socket welding ends; either fixed or loose back seat type; stellite trim; gates and globes outside screw and yoke (OS&Y); pressure seal; integral, welded, or flanged bonnets; check valves shall be lift check type; and solid wedge gate valves. 65mm (2 1/2") and larger - 150 lb cast carbon steel, ASTM A 216 WCB; butt welding ends; bolted bonnets or covers; solid or flexible wedge, outside screw and yoke (OS&Y); stellite seat ring, 12 percent chrome disc; check valves swing type, globe valves designed for pressure under the seat; 200mm (8") and larger globe valves with gear operator; 300mm (12") and larger gate valves with gear operator.

PIPING CLASS 150CS
(Continued)

Weld End Preparation:

50mm (2") and smaller - square cut, reamed and deburred.

65mm (2 1/2") and larger - see "Weld End Preparation Detail", Attachment 4, Figure A.

Backing Ring for Field Butt Welds:

Carbon steel split type with strike-off spacer pins.

Nondestructive Examination:

Per requirements of Table 136.4 in current edition of ANSI/ASME B31.1.

PIPING CLASS 150SS

Pipe:	50mm (2") and smaller - Seamless or welded A312 TP 304 Schedule 40S.
	65mm (2 1/2") to 300mm (12") - Seamless or welded, A312 TP 304, Schedule 40.
	350mm (14") and larger - Seamless or welded, A312 TP 304, standard weight.
Fittings:	50mm (2") and smaller - ASTM A 182 Gr F304, 3,000 lb, socket weld.
	65mm (2 1/2") and larger - ASTM A 403 Gr WP304, butt weld, same wall thickness as pipe.
Flanges:	50mm (2") and smaller - ASTM A 182 Gr F304, Class 150, socket weld.
	65mm (2 1/2") and larger - ASTM A 182 Gr F304, Class 150, weld neck.
Gaskets:	Spiral wound stainless steel/asbestos, Flexitallic style CG or equal. Spiral winding to be 304 S.S. up to 427°C (800°F), 316L S.S. above 427°C (800°F). Class 1 heat treatment, Gr B8M
Bolts:	Bolt and bolt studs - ASTM A 193 Gr B7 heavy hexagon head, Class 2A.
Nuts:	ASTM A 194 Gr 8 heavy hexagon, Class 2B.
Valves:	50mm (2") and smaller - ASTM A 182 Gr F304, Class 600, socket weld.
	65mm (2 1/2") and larger - ASTM A 351 Gr CF8, Class 150, flanged or butt weld.

Weld End Preparation:

50mm (2") and smaller - square cut, reamed, and deburred

65mm (2 1/2") and larger - see "Weld End Preparation Detail" Attachment 4, Figure A.

PIPING CLASS 150SS
(Continued)

Backing Ring for Field Butt Welds:

Stainless steel split-type with strike-off spacer pins.

Nondestructive Examination:

Per requirements of Table 136.4 in current edition of ANSI/ASME B31.1.

PIPING CLASS 250CS

Piping:	50mm (2") and smaller - ASTM A53 or A 106 Gr A seamless, Schedule 80.
	65mm (2 1/2") through 250mm (10") - ASTM A 53 or A 106 Gr A seamless, Schedule 40.
	300mm (12") and larger - ASTM A 106 Gr A, Seamless, standard weight.
Fittings:	50mm (2") and smaller - 3,000 lb, socket weld ASTM A 105.
	65mm (2 1/2") and larger - ASTM A234, Gr WPB, butt weld, same thickness as pipe.
Flanges:	300 lb, ASTM A 105 weld neck type 1.5mm (1/16") raised face.
Flanged Fittings:	
	Class 250, CI, ASTM A 126.
Unions:	50mm (2") and smaller, 3,000 lb, ASTM A 105, bronze to steel seat, inside and outside cadmium plated union ring.
Gaskets:	3mm (1/8") thick ring type, spiral wound stainless steel, asbestos filler, Flexitallic, Style CG or equal.
Bolts:	Bolt studs, ASTM A 193, Gr B7, Screw Threads, Class 2A.
Nuts:	Semi-finished hex, heavy hexagon dimensions, ASTM A 194, Gr 2H, Class 2B.
Valves:	50mm (2") and smaller - 250 lb, ASTM A 105; socket weld, either fixed or loose back seat type; stellite trim; gates and globes outside screw and yoke (OS&Y), pressure seal; integral, welded, or flanged bonnets; check valves shall be lift check type, and solid wedge gate valves.
	65mm (2 1/2") and larger - 250 lb ASTM A 216 WCB; butt weld, bolted bonnets or covers; solid or flexible wedge; outside screw and yoke (OS&Y) stellite seat ring, 12 percent chrome disc; check valves swing type; globe valves designed for pressure under seat; 200mm (8") and larger -globe valves with gear operator; and 300mm (12)" and larger -gate valves with gear operator.

PIPING CLASS 250CS
(Continued)

Weld End Preparation:

50mm (2") and smaller - square cut, reamed, and deburred

65mm (2 1/2") and larger - see "Weld End Preparation Detail" Attachment 4, Figure A

Backing Ring for Field Butt Welds:

Carbon steel split-type with strike-off spacer pins.

Nondestructive Examination:

Per requirements of Table 136.4 in current edition of ANSI/ASME B31.1.

PIPING CLASS 300AS

Definitions:	Low alloy - 1 1/4% Cr, 1/2% Mo-Si, ASTM A 335-P11
	Intermediate alloy - 2 1/4% Cr, 1% Mo, ASTM A 335-P22
Pipe:	50mm (2") and smaller - Seamless ASTM A 335 Gr P11 or P22, Schedule 80.
	65mm (2 1/2") to 250mm (10") - Seamless ASTM A 335 Gr P11 or P22, Schedule 40.
	300mm (12") and larger - Seamless ASTM A335 Gr P11 or P22, standard weight.
Fittings:	50mm (2") and smaller - ASTM A 182 Gr F11 or F22, 3,000 lb, socket weld.
	65mm (2 1/2") and larger - ASTM A 234 Gr WP11 or WP22, Schedule 40, butt weld.
Flanges:	50mm (2") and smaller - ASTM A 182 Gr F11 or F22, 300 lb, socket weld.
	65mm (2 1/2") and larger - ASTM A 182 Gr F11 or F22, 300 lb, butt weld.
Gaskets:	Spiral wound stainless steel/asbestos, flexitallic style CG or equal. Spiral winding to be 304 S.S. up to 427°C (800°F), 316L S.S. above 427°C (800°)F.
Bolts:	Bolt studs, ASTM A 193, Gr B7, Class 2A.
Nuts:	Semi-finished hex, heavy hexagon dimensions, ASTM A 194, Grade 2H, Class 2B.
Unions:	40mm (1 1/2") and smaller - Forged steel, ASTM A 182, Gr F11 or F22.
Valves:	50mm (2") and smaller - 600 lb ASTM A 182 Gr F11 or Gr F22, socket weld, either fixed or loose back seat type, stellite trim; gates and globes outside screw and yoke (OS&Y); pressure seal; integral, welded, or flanged bonnets; check valves shall be lift check type and solid wedge gate valves.

PIPING CLASS 300AS
(Continued)

65mm (2 1/2") and larger - 300 lb flanged or butt weld, ASTM A 217 Gr WC6 or WC9, bolted bonnets or covers; solid or flexible wedge; outside screw and yoke (OS&Y), stellite seat ring, 12 percent chrome; check valves swing type; globe valves designed for pressure under the seat; 200mm (8") and larger - globe valves with gear operator; 300mm (12") and larger - gate valves with gear operator.

Weld End Preparation:

50mm (2") and smaller - square cut, reamed, and deburred

65mm (2 1/2") and larger - See "Weld End Preparation Detail," Attachment 4, Figure A.

Backing Ring for Field Butt Welds:

Alloy steel split-type with strike-off spacer pins.

Nondestructive Examination:

Per requirements of Table 136.4 in current edition of ANSI/ASME B31.1.

PIPING CLASS 300CS

Pipe:

50mm (2") and smaller - seamless ASTM A 106 Gr B or A 53 Gr B, Schedule 80.

65mm (2 1/2") through 250mm (10") - seamless ASTM A 106 Gr B or A 53 Gr B, Schedule 40.

300mm (12") through 400mm (16") - seamless ASTM A 106, Gr B, standard weight.

450mm (18") through 550mm (22") - seamless ASTM A 106 Gr B, XS.

600mm (24") - seamless ASTM A 106 Gr B, Schedule 30.

Fittings:

50mm (2") and smaller - ASTM A 105, 3,000 lb, socket weld.

65mm (2 1/2") through 600mm (24") - ASTM A 234 Gr WPB, butt weld, same schedule or weight class as pipe.

Flanges:

50mm (2") and smaller - 300 lb socket weld, raised face ASTM A 105.

65mm (2 1/2") through 600mm (24") - 300 lb, weldneck raised face, ASTM A 105.

Branch Connections:

50mm (2") and smaller - sockolet, X.S. ASTM A 105, 3,000 lb.

65mm (2 1/2") and larger - nozzle weld.

In general use tees for branch connections the same size as run. In general use weldolets where branch connections are at least one pipe size smaller.

Instrument Connections:

Refer to Attachment 5 "Branch Connection/Instrument Tap," Figure C; "Weld in Thermowell," Figure D; and "Fluid Sample Nozzle Installation," Figure E.

Unions:

50mm (2") and smaller - ASTM A 105, 3,000 lb, socket weld, pipe threads, integral seat, ground joint.

65mm (2 1/2") and larger - use flanges.

PIPING CLASS 300CS
(Continued)

Gaskets: Water - 3mm (1/8") red rubber, ring type up to 66°C (150°F) and 4964 KPa (720 psi); above 66°C (150°F) and 4964 KPa (720 psi), 300 lb Flexitallic style CG or equal.

Oil - 1.5mm (1/16"), 300 lb, vellumoid, or equal.

Steam - 3mm (1/8") thick, 300 lb, Flexitallic style CG or equal. Canadian asbestos gasket filler, for water and steam below 427°C (800°F) Type 304 stainless steel gasket metal.

Bolts: Bolt studs - ASTM A 193, Gr B7, Class 2A, (28mm-1 1/8" and larger use 8-pitch thread).

Nuts: Semi-finished heavy hexagon, ASTM A 194, Gr 2H, Class 2B, (28mm-1 1/8" and larger use 8-pitch thread).

Valves: 50mm (2") and smaller - 600 lb, ASTM A 105; socket weld, either fixed or loose backseat type; stellite trim; gates and globes outside screw and yoke (OS&Y); pressure seal; integral, welded, or flanged bonnets; check valves shall be lift check type; and solid wedge gate valves.

65mm (2 1/2") and larger - 300 lb ASTM A 216 WCB; butt weld, bolted bonnets or covers; solid or flexible wedge; outside screw and yoke (OS&Y) stellite seat ring, 12 percent chrome disc; check valves swing type; globe valves designed for pressure under the seat; 200mm (8") and larger-globe valves with gear operator; and 300mm (12") and larger-gate valves with gear operator.

Weld End Preparation:

50mm (2") and smaller - square cut, reamed, and deburred.

65mm (2 1/2") and larger - See "Weld End Preparation Detail," Attachment 4, Figure A.

Backing Ring for Field Butt Welds:

Carbon steel split-type with strike-off spacer pins.

Nondestructive Examination:

Per requirements of Table 136.4 in current edition of ANSI/ASME B31.1.

PIPING CLASS 400AS

Definitions:	Low alloy - 1 1/4% Cr, 1/2% Mo., ASTM A 335-P11
	Intermediate alloy - 2 1/2% Cr, 1% Mo., ASTM A 335-P22
Pipe:	300mm (12") and smaller - ASTM A 335 Gr P11 or P22, XS.
	350mm (14") and larger - ASTM A 335 Gr P11 or P22 Schedule 60.
Fittings:	50mm (2") and smaller - ASTM A 182 Gr F11 or F22 3,000 lb, socket weld.
	65mm (2 1/2") and larger - ASTM A 234 Gr WP11 or WP22 butt weld, same thickness as pipe.
Flanges:	50mm (2") and smaller - ASTM A 182, Gr F11 or F22, 600 lb class, socket weld.
	65mm (2 1/2") and larger - ASTM A 182 Gr F11 or F22, 400 lb class, weld neck.
Unions:	Do not use.
Gaskets:	Spiral wound stainless steel/asbestos, flexitallic Style CG or equal. Spiral winding to be 304 S.S. up to 427°C (800°F), 316L S.S. above 427°C (800°F).
Bolts:	Bolt studs, ASTM A 193, Gr B7, Class 2A.
Nuts:	Semifinished, heavy hexagon dimensions, ASTM A 194, Grade 2H, Class 2B.
Valves:	50mm (2") and smaller - Class 600 socket weld, ASTM A 182 Gr F11 or F22.
	65mm (2 1/2") and larger - Class 400 flanged or butt weld, ASTM A 217 Gr WC6 or WC9.

Weld End Preparation:

50mm (2") and smaller - Square cut, reamed, and deburred.

65mm (2 1/2") through 300mm (12") - See "Weld End Preparation Detail," Attachment 4, Figure A.

PIPING CLASS 400AS
(Continued)

350mm (14") and larger - See "Weld End Preparation Detail," Section 4.3, Figure B.

Backing Ring for Field Butt Welds:

65mm (2 1/2") through 300mm (12") - Alloy steel split-type with strike-off spacer pins.

350mm (14") and larger - Alloy steel solid machined ring.

Nondestructive Examination:

Per requirements of Table 136.4 in current edition of ANSI/ASME B31.1.

PIPING CLASS 400CS

Pipe:	50mm (2") and smaller - ASTM A 53 or A 106, Gr B seamless, Schedule 80.
	65mm (2 1/2") to 400mm (16") - ASTM A 53 or A 106 Gr B seamless, X.S.
	450mm (18") and larger - ASTM A 106, Gr B, seamless, Schedule 80.
Fittings:	40mm (1 1/2") and smaller - 3,000 lb, socket weld, ASTM A 105.
	50mm (2") and larger - Butt weld, same thickness as pipe ASTM A 234, Gr WPB.
Flanges:	50mm (2") and smaller - ASTM A 105, 600 lb class, socket weld,
	65mm (2 1/2") and larger, ASTM A 105, 400 lb class, weld neck type, 6mm (1/4") raised face. Specify bore to match pipe I.D.
Unions:	Do not use.
Gaskets:	3mm (1/8") thick ring type spiral wound stainless steel/asbestos, flexitallic Style CG or equal.
Bolts:	Bolt studs, ASTM A 193, Gr B7.
Nuts:	Semi-finished, heavy hexagon dimensions, ASTM A 194, Class 2H.

Weld End Preparation:

50mm (2") and smaller - Square cut, reamed, and deburred.

65mm (2 1/2") through 400mm (16") - See "Weld End Preparation Detail," Attachment 4, Figure A.

450mm (18") and larger - See "Weld End Preparation Detail," Attachment 4, Figure B.

Backing Ring for Field Butt Welds:

65mm (2 1/2") through 400mm (16") - Carbon steel split-type with strike-off spacer pins.

450mm (18") and larger - Carbon steel solid machined ring.

Nondestructive Examination:

Per requirements of Table 136.4 in the current edition of ANSI/ASME B31.1.

PIPING CLASS 600AS

Definitions:

Low alloy - 1 1/4% Cr, 1/2% Mo., ASTM A 335-P11

Intermediate alloy - 2 1/4% Cr, 1% Mo., ASTM A 335-P22

Pipe: 200mm (8") and smaller - ASTM A 335 Gr P11 or P22, Schedule 80.

250mm (10") and larger - ASTM A 335 Gr P11 or P22, Schedule 100.

Fittings: 50mm (2") and smaller - ASTM A 182 Gr F11 or F22, 3,000 lb socket weld.

65mm (2 1/2") and larger - ASTM A 234 Gr WP11 or WP22, butt weld, wall thickness to match pipe.

Flanges: 50mm (2") and smaller - ASTM A 182 Gr F11 or F22 600 lb class, socket weld.

65mm (2 1/2") and larger - ASTM A 182 Gr F11 or F22, 600 lb class, weld neck, bore to match pipe.

Gaskets: Spiral wound stainless steel/asbestos, flexitallic Style CG or equal. Spiral winding to be 304 S.S. up to 427°C (800°F), 316L S.S. above 427°C (800°F).

Bolts: Bolt studs, unified screw threads, Class 2A, ASTM A 193, Gr B7.

Nuts: Semifinished, heavy hexagon dimensions, ASTM A 194, Class 2H.

Valves: 50mm (2") and smaller - 600 lb, ASTM A 182, Gr F11 or F22, socket weld; either fixed or loose back seat type; stellite trim; gates and globes outside screw and yoke (OS&Y); pressure seal; integral, welded or flanged bonnets; check valves shall be lift check type; and solid wedge gate valves.

65mm (2 1/2") and larger - 600 lb, flanged or butt weld, ASTM A 217, Gr WC6 or WC9; pressure seal bonnets or covers, stellite seating rings. Flex wedge design disc gate valves, globe valves designed for pressure under the seat. Check valves Y-pattern piston tilting disc or swing design, stop-check valves Y-pattern design.

PIPING CLASS 600AS
(Continued)

Weld End Preparation:

50mm (2") and smaller - Square cut, reamed, and deburred.

65mm (2 1/2") through 200mm (8") - See "Weld End Preparation Detail," Attachment 4, Figure A.

250mm (10") and larger - See "Weld End Preparation Detail," Attachment 4, Figure B.

Backing Ring for Field Butt Welds:

65mm (2 1/2") through 200mm (8") - Alloy steel split-type with strike-off spacer pins.

250mm (10") and larger - Alloy steel solid machined ring.

Nondestructive Examination:

Per requirements of Table 136.4 in current edition of ANSI/ASME B31.1.

PIPING CLASS 600CS

Pipe: 50mm (2") and smaller -seamless ASTM A 106 Gr B, Schedule 80.

65mm (2 1/2") through 100mm (4") -seamless ASTM A 106 Gr B, Schedule 40.

150mm (6") through 250mm (10") -seamless ASTM A 106 Gr B, XS.

300mm (12") through 600mm (24") -seamless ASTM A 106 Gr B, Schedule 80.

Fittings: 50mm (2") and smaller -forged carbon steel, ASTM A 105, 3,000 lb, socket weld type.

65mm (2 1/2") through 600mm (24") -carbon steel, ASTM A 234 Gr WPB, butt welding type, same schedule or weight class as pipe.

Flanges: 50mm (2") and smaller - 600 lb, socket weld, raised face, smooth finish, ASTM A 105.

65mm (2 1/2") and larger - 600 lb, weld neck raised face, smooth finish, ASTM A 105.

Branch Connections:

50mm (2") and smaller - Sockolet, ASTM A 105, 3,000 lb, X.S.

65mm (2 1/2") and larger - nozzle weld.

Use tees for branch connections the same size as run. In general use weldolets where branch connections are at least one pipe size smaller.

Instrument Connections:

Refer to "Branch Connection/Instrument Tap," Figure C; "Weld in Thermowell," Figure D; and "Fluid Sample Nozzle Installation," Figure E.

Unions: Do not use.

Gaskets: 3mm (1/8") thick, 600 lb, Flexitallic Style CG or equal. Canadian asbestos gasket filler, for water and steam below 427°C (800°F) Type 304 stainless steel gasket metal.

PIPING CLASS 600CS
(Continued)

Bolts: Bolt studs - ASTM A 193, Gr B7, Class 2A, (28mm-1 1/8" and larger use 8-pitch thread).

Nuts: Semi-finished, heavy hexagon, ASTM A 194, Gr 2H, Class 2B, (28mm-1 1/8" and larger use 8-pitch thread).

Valves: 50mm (2") and smaller - 600 lb forged carbon steel; ASTM A 105, socket welding ends, either fixed or loose back seat type; stellite trim; gates and globes outside screw and yoke (OS&Y); pressure seal; integral, welded, or flanged bonnets; check valves shall be lift check type; and solid wedge gate valves.

65mm (2 1/2") and larger - 600 lb cast carbon steel, ASTM A 216 WCB, butt welding ends, pressure seal bonnets or covers, stellite seating rings. Flex wedge design disc-gate valves, globe valves designed for pressure under the seat. Check valves Y-pattern piston tilting disc or swing design, stopcheck valves Y-pattern design.

Weld End Preparation:

50mm (2") and smaller - square cut, reamed, and deburred.

65mm (2 1/2") through 250mm (10") - See "Weld End Preparation Detail," Attachment 4, Figure A.

300mm (12") through 600mm (24") - See "Weld End Preparation Detail," Attachment 4, Figure B.

Backing Ring for Field Butt Welds:

65mm (2 1/2") through 250mm (10") - Carbon steel split-type with strike-off spacer pins.

300mm (12") through 600mm (24") - Carbon steel solid machined ring.

Nondestructive Examination:

Per requirements of Table 136.4 in current edition of ANSI/ASME B31.1.

PIPING CLASS 900AS

Definitions:	Low alloy - 1 1/4% Cr, 1/2% Mo., ASTM A 335-P11
	Intermediate alloy - 2 1/2% Cr, 1% Mo., ASTM A 335-P22
Pipe:	80mm (3") and smaller - ASTM A 335, Gr P11 or P22, Schedule 80.
	100mm (4") to 200mm (8") - ASTM A 335, Gr P11 or P22, Schedule 120.
	250mm (10") and larger - ASTM A 335, Gr P11 or P22, Schedule 160.
Fittings:	50mm (2") and smaller - ASTM A 182 Gr F11 or F22, 3,000 lb, socket weld.
	65mm (2 1/2") and larger - ASTM A 234 Gr WP11 or WP22, butt weld, wall thickness to match pipe.
Flanges:	All sizes - ASTM A 182 Gr F11 or F22, class 900 weld neck, specify bore to match pipe I.D.
Gaskets:	Spiral wound stainless steel/asbestos, flexitallic style CG or equal. Spiral winding to be 304 S.S. up to 427°C (800°F), 316L S.S. above 427°C (800°F).
Bolts:	Bolt studs, unified screw threads, Class 2A, ASTM A 193, Gr B14, Class 2A.
Nuts:	Semifinished, for heavy hexagon dimensions, ASTM A 194, Grade 2H.
Valves:	50mm (2") and smaller - 1500 lb, ASTM A 182, Gr F11 of F22, socket weld; either fixed or loose back seat type, stellite trim; gates and globes outside screw and yoke (OS&Y); pressure seal, integral, or welded steel bonnets; and check valves lift check type.
	65mm (2 1/2") and larger - 900 lb, ASTM A 217, Gr WC6 or WC9, flanged or butt welded; pressure seal bonnets or covers, stellite seating rings welded in place, globe valves designed for pressure under the seat; check valves Y-pattern piston, tilting disc or swing design, stop-check valves Y-pattern design.

PIPING CLASS 900AS
(Continued)

Weld End Preparation:

50mm (2") and smaller - Square cut, reamed, and deburred.

65mm (2 1/2") through 150mm (6") - See "Weld End Preparation Detail," Section 4.3, Figure A.

200mm (8") and larger - See "Weld End Preparation Detail," Section 4.3, Figure B.

Backing Ring for Field Butt Welds:

65mm (2 1/2") through 150mm (6") - Alloy steel split-type with strike-off spacer pins.

200mm (8") and larger - Alloy steel solid machined ring.

Nondestructive Examination:

Per requirements of Table 136.4 in current edition of ANSI/ASME B31.1.

PIPING CLASS 900CS

Pipe:	150mm (6") and smaller - Seamless A106 Gr B, Schedule 80.
	200mm (8") to 500mm (20") - Seamless A106 Gr B, Schedule 100.
	550mm (22") and 600mm (24") - Seamless A106 Gr B, Schedule 120.
Fittings:	50mm (2") and smaller - 3,000 lb, socket weld type, ASTM A 105.
	65mm (2 1/2") through 600mm (24") - Butt weld, same schedule as pipe, ASTM A 234 Gr WPB.
Flanges:	50mm (2") and smaller - 1500 lb socket weld flange, raised face, smooth finish, ASTM A 105.
	65mm (2 1/2") and larger - 900 lb weld neck raised face, smooth finish, ASTM A 105.

Branch Connections:

50mm (2") and smaller - sockolet, ASTM A 105, XS.
65mm (2 1/2") and larger - nozzle weld.

Use tees for branch connections the same size as run. In general use weldolets where branch connections are at least one pipe size smaller.

Instrument Connections:

Refer to Attachment 5 "Branch Connection/Instrument Tap," Figure C; "Weld in Thermowell," Figure D; and "Fluid Sample Nozzle Installation," Figure E.

Unions:	None
Gaskets:	3mm (1/8") thick, 900 lb, Flexatallic style CG or equal. Canadian asbestos gasket filler, for water and steam below 427°C (800°F), Type 304 stainless steel gasket metal.
Bolts:	Bolt studs - ASTM A 193, Gr B7, Class 2A, (28mm-1 1/8" and larger use 8-pitch thread).
Nuts:	Semi-finished heavy hexagon, ASTM A 194, Gr 2H, Class 2B, (28mm-1 1/8" and larger use 8-pitch thread).

PIPING CLASS 900CS
(Continued)

Valves: 50mm (2") and smaller - 1500 lb forged carbon steel, ASTM A 105, socket welding end, either fixed or loose back seat type, stellite trim; gates and globes outside screw and yoke (OS&Y); pressure seal, integral, or welded steel bonnets; and check valves lift check type.

65mm (2 1/2") and larger - 900 lb cast carbon steel ASTM A 216 WCB, butt welding ends, pressure seal bonnets or covers, stellite seating rings welded in place, globe valves designed for pressure under the seat; check valves Y-pattern piston, tilting disc or swing design, stop-check valves Y-pattern design.

Weld End Preparation:

50mm (2") and smaller - square cut, reamed, and deburred.

65mm (2 1/2") through 150mm (6") - See "Weld End Preparation Detail," Attachment 4, Figure A.

200mm (8") and larger - See "Weld End Preparation Detail," Attachment 4, Figure B.

Backing Ring for Field Butt Welds:

65mm (2 1/2") through 150mm (6") - Carbon steel split-type with strike-off spacer pins.

200mm (8") and larger - Carbon steel solid machined ring.

Nondestructive Examination:

Per requirements of Table 136.4 in current edition of ANSI/ASME B31.1.

PIPING CLASS 1500AS

Definitions:	Low alloy - 1 1/4% Cr, 1/2% Mo., ASTM A 335-P11
	Intermediate alloy - 2 1/4% Cr, 1% Mo., ASTM A 335-P22
Pipe:	ASTM A 335 Gr P11 or P22. Calculate minimum wall thickness in accordance with ANSI/ASME B31.1 - latest edition.
Fittings:	50mm (2") and smaller - ASTM A 182 Gr F11 or F22, 6,000 lb socket weld, ANSI B16.11.
	65mm (2 1/2") to 600mm (24") - ASTM A 234 Gr WP11 or WP22, butt weld, wall thickness to match pipe.
Flanges:	All Sizes - ASTM A 182 Gr F11 or F22, Class 1500 weld neck, specify bore to match pipe I.D.
Gaskets:	Spiral wound stainless steel/asbestos, flexitallic style CG or equal. Spiral winding to be 304 S.S. up to 427°C (800°F), 316L S.S. above 427°C (800°F).
Bolts:	Bolt studs, unified screw threads, Class 2A, ASTM A 193, Gr B14, Class 2A.
Nuts:	Semi-finished, heavy hexagon dimensions, ASTM A 194, Grade 2H, Class 2B.
Valves:	50mm (2") and smaller - 1500 lb, ASTM A 182, Gr F11 or F22, socket weld; either fixed or loose back seat type, stellite trim; gates and globes outside screw and yoke (OS&Y); pressure seal, integral, or welded steel bonnets; and check valves lift check type.
	65mm (2 1/2") and larger - 1500 lb, ASTM A 217, Gr WC6 or WC9, flanged or butt welded; pressure seal bonnets or covers, stellite seating rings welded in place; flex wedge design disc - gate valve, globe valves designed for pressure under the seat, check valves Y-pattern piston, tilting disc, or swing design, stop-check valves Y-pattern design.

Weld End Preparation:

50mm (2") and smaller - Square cut, reamed, and deburred.

PIPING CLASS 1500AS
(Continued)

65mm (2 1/2") and larger - See "Weld End Preparation Detail," Attachment 4, Figure A or Figure B according to minimum wall thickness.

Backing Ring for Filed Butt Welds:

Alloy steel ring to suit weld end preparation.

Nondestructive Examination:

Per requirements of Table 136.4 in current edition of ANSI/ASME B31.1.

PIPING CLASS 1500CS

Pipe: 50mm (2") and smaller - seamless A106 Gr B, Schedule 160.

65mm (2 1/2") through 600mm (24") - seamless A106 Gr C, Schedule 160.

Fittings: 50mm (2") and smaller - Carbon steel 6,000 lb socket weld type, ASTM A 105.

65mm (2 1/2") through 600mm (24") - carbon steel, butt weld, ASTM A 234 Gr WPB, same schedule as pipe.

Flanges: 50mm (2") and smaller - 1,500 lb socket weld flange, raised face, smooth finish, ASTM A 105.

65mm (2 1/2") and larger - 1,500 lb weld neck, raised face, smooth finish, ASTM A 105.

Branch Connections:

50mm (2") and smaller - sockolet ASTM A 105, XXS.

65mm (2 1/2") and larger - nozzle weld.

Use tees for branch connections the same size as run. In general, use weldolets where branch connections are at least one pipe size smaller.

Instrument Connections:

Refer to Attachment 5, "Branch Connection/Instrument Tap," Figure C; "Weld in Thermowell," Figure D; and "Fluid Sample Nozzle Installation," Figure E.

Unions: Do not use.

Gaskets: 3mm (1/8") thick, 1500 lb, Flexatallic style CG or equal. Canadian asbestos gasket filler, for water and steam below 800°F, Type 304 stainless steel gasket metal.

Bolts: Bolts - ASTM A 191, Gr B7, Class 2A, (28mm-1 1/8" and larger use 8-pitch thread).

Studs - ASTM A 193, Gr B7, Class 2A (28mm-1 1/8" and larger use 8-pitch thread).

PIPING CLASS 1500CS
(Continued)

Nuts: Semi-finished, heavy hexagon, A 194, Gr 2H, Class 2B, (28mm-1 1/8" and larger use 8-pitch thread).

Valves: 50mm (2") and smaller - 1,500 lb forged carbon steel ASTM A 105, socket weld, either fixed or loose back seat type, stellite trim; gates and globes outside screw and yoke (OS&Y); pressure seal, integral, or welded steel bonnets; and check valves lift check type.

65mm (2 1/2") and larger - 1,500 lb cast carbon steel ASTM A 216 WCB; butt welding ends, pressure seal bonnets or covers, stellite seating rings welded in place; flex wedge design discs - gate valve, globe valves designed for pressure under the seat, check valves Y-pattern piston, tilting disc, or swing design, stop-check valves Y-pattern design.

Weld End Preparation:

50mm (2") and smaller - square cut, reamed, and deburred.

65mm (2 1/2") - See "Weld End Preparation Detail," Attachment 4, Figure A.

80mm (3") and larger - See "Weld End Preparation Detail," Attachment 4, Figure B.

Backing Ring for Field Butt Welds:

65mm (2 1/2") - Carbon steel split-type with strike-off spacer pins.

80mm (3") and larger - Carbon steel solid machined ring.

Nondestructive Examination:

Per requirements of Table 136.4 in current edition of ANSI/ASME B31.1.

ATTACHMENT 2

POWER PIPE LINE LIST

TABLE 1: POWER PIPE LINE LIST

Line	Piping Class
Steamlines	
Extraction Steam	
To L.P. Heaters	150CS
To Deaerator	300CS
To H.P. Heater #6	300AS
To H.P. Heater #7	600CS
Aux. Boiler Steam	300CS
Main Steam Safety Valve Vents	300CS
Cold Reheat Safety Valve Vents	150CS
Reheats Safety Valve Vents	150CS
Drains	
Heater Drains	
L.P. Heaters No.'s 1, 2, 3, 4	150CS
Deaerator	300CS
H.P. Heater #6	300CS
H.P. Heater #7	600CS
Flash Tank Drains	150CS
Aux. Boiler Drain Tank Drain	150CS
Continuous Blowdown	1500CS
Water Wall Drains	1500CS
Economizer	1500CS
Pri. Superheater Outlet Header	1500CS
Fin. Superheater Outlet Header	1500CS
Moisture Separator Drains	300CS

TABLE 1: POWER PIPE LINE LIST
(Continued)

Line	Piping Class
Drains (continued)	
Continuous Blowdown Drains	300CS
Reheat Inlet Header	600CS
Reheat Outlet Header	600CS
Continuous Blowdown Tank By-Pass	600CS
Vents	
L.P. Heaters to Cond.	150CS
H.P. Heater #6 to Dia.	300AS
H.P. Heater #7 to Dia.	600CS
Deaerator to Atmos.	300CS
Deaerator to Cond.	300CS
Continuous Blowdown Tank	300CS
Drum Vents	1500CS
Oil Lines	
Fuel Oil Pumps Suction	150CS
Fuel Oil Pumps to Ignitors	150CS
Fuel Oil Pumps to Aux. Boiler	150CS
Turbine Lube Oil Purification	150CS

TABLE 1: POWER PIPE LINE LIST
(Continued)

Line	Piping Class
Water Lines	
Condensate Pump Suction	300CS
Condensate Pump before S.V.	300CS
Condensate Pump after S.V.	150CS
Condensate to L.P. Heater and Dia.	300CS
Booster Pump Suction	300CS
Booster Pump Discharge to BFP	300CS
Condensate to BFP Seals	300CS
BFP Seals to Condenser	150CS
Condensate Make-up and Return	150CS
Cooling Water System Spray	120CS
Cooling Water System Return	120CS
Service Water System	120CS
Air Lines	
Condenser Air Removal Suction	150CS
Condenser Air Removal Discharge	150CS
Instrument Air	150CS
Service Air	150CS
Miscellaneous Systems	
Aux. Steam Gen. Ammonia	150SS
Aux. Steam Gen. Phosphate	150SS

TABLE 1: POWER PIPE LINE LIST
(Continued)

Line	Piping Class
Miscellaneous Systems (continued)	
Miscellaneous Gases	
CO_2	150CS
H_2	150CS
N_2	150CS
Chemical Cleaning	300CS
Steam Blow	600CS

ATTACHMENT 3

WELD END PREPARATION SCHEDULE

TABLE 2: WELD END PREPARATION SCHEDULE

PIPING CLASS	PIPE SIZE													
	2 1/2 65 mm	3 80 mm	4 100 mm	6 150 mm	8 200 mm	10 250 mm	12 300 mm	14 350 mm	16 400 mm	18 450 mm	20 500 mm	22 550 mm	24 600 mm	Over 24" 600 mm
120 CS	Std.													
150 AS	Std.													
150 CS	Sch. 40						Std.							
250 CS	Sch. 40						Std.							
300 AS	Sch. 40						Std.							
300 CS	Sch. 40						Std.			X.S.				
600 AS	Sch. 80					Sch. 100								
600 CS	Sch. 40			X.S.			Sch. 80							
900 AS	Sch. 80		Sch. 120						Sch. 160					
900 CS	Sch. 80				Sch. 100							Sch. 120		
1500 AS	Special (Min. Wall)													
1500 CS	Sch. 160													
2500 AS	Special (Min. Wall)													
2500 CS	X.X.S.			Sch. 160 (Special)										

Weld End Preparation (Fig. A)

Weld End Preparation (Fig. B)

ATTACHMENT 4

WELD END PREPARATION DETAILS

FIGURE A

WELD END PREPARATION DETAIL

(FOR CARBON STEEL AND LOW CHROME PIPING
WITH WALL LESS THAN 9/16")
(14mm)

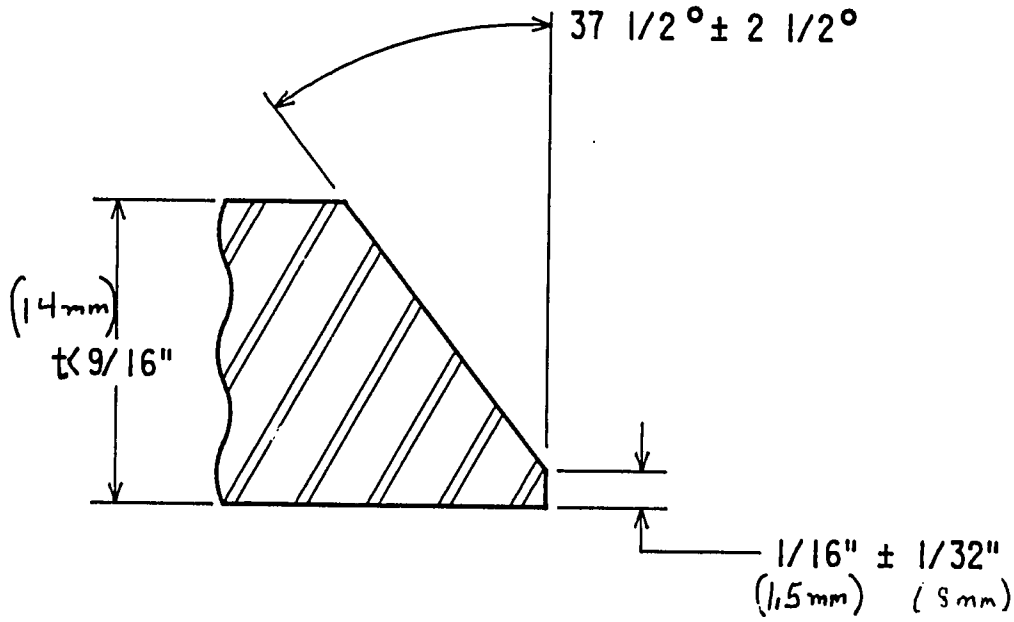

(FOR USE WITH SPLIT-TYPE COMMERCIAL BACKING
RING OF MATERIAL COMPATABLE WITH PIPE MATERIAL)

PIPING DESIGN AND CLASS STANDARDS

REV.	DATE	DESCRIPTION	DFTG.	CHK'D	ENG.	S. ENG.

MECH.	ELECT.	STRUCT.	I&C
DRAWN BY JLC 10/26/82	CHECKED BY	ENGINEER	SUPERVISING ENGINEER

PREPARED UNDER RESPONSIBLE SUPERVISION OF	OWNER	TITLE
AT THE OFFICE OF COMMONWEALTH ASSOCIATES INC. 209 E. WASHINGTON AVE. JACKSON, MICHIGAN		JOB NO.
		DRAWING NO. SHEET REV.

FIGURE B

WELD END PREPARATION DETAIL

(FOR CARBON STEEL AND LOW CHROME PIPING WITH WALL EQUAL TO OR GREATER THAN 5.6mm (9/16") COMPOUND BEVEL REQUIRED ONLY ON PIPING ABOVE 25mm (1") NOMINAL WALL THICKNESS. C BORE PER APPLICABLE FORMULA FOR OD OR ID SPECIFIED PIPE IN PFI STANDARD ES-1)

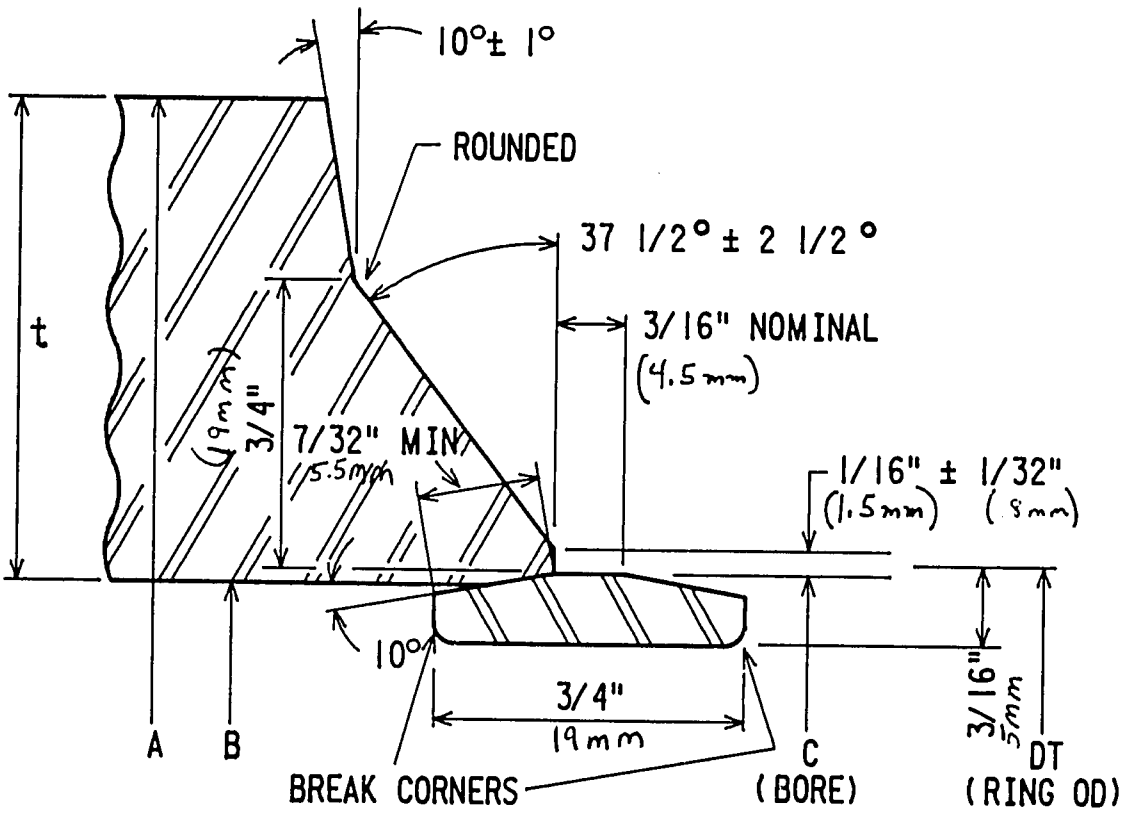

(FOR USE WITH MACHINED RING OR MATERIAL COMPATABLE WITH PIPE MATERIAL)

A = OUTSIDE DIAMETER
B = INSIDE DIAMETER

PIPING DESIGN AND CLASS STANDARDS

REV.	DATE	DESCRIPTION	DFTG.	CHK'D	ENG.	S. ENG.

MECH.	ELECT.	STRUCT.	I&C
DRAWN BY JLC 10/26/82	CHECKED BY	ENGINEER	SUPERVISING ENGINEER

PREPARED UNDER RESPONSIBLE SUPERVISION OF

AT THE OFFICE OF

COMMONWEALTH ASSOCIATES INC.
209 E. WASHINGTON AVE. JACKSON, MICHIGAN

OWNER

TITLE

JOB NO.

DRAWING NO. SHEET REV.

ATTACHMENT 5

INSTRUMENT TAPS, THERMOWELL AND NOZZLE DETAILS

BRANCH CONNECTION/
INSTRUMENT TAP
FIGURE C

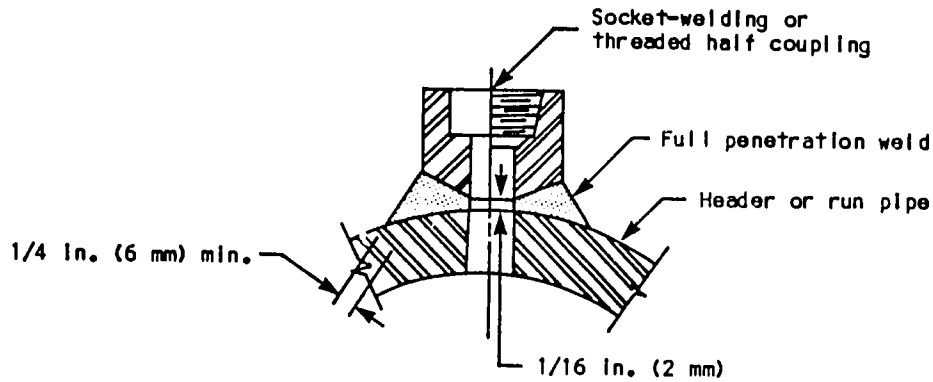

Branch Connection/Instrument Tap using ANSI B16.11 forged steel socket weld or threaded half coupling.

1. Use 3/4" (19 mm) socket weld for instrument pressure tap up to 800 psig (55 bar) or 700°F (371°C).
2. Use 1" (25 mm) socket weld for instrument pressure tap over 800 psig (55 bar) or 700°F (371°C).
3. Use 1" (25 mm) NPT for screwed thermowells up to 800 psig (55 bar) or 700°F (371°C).

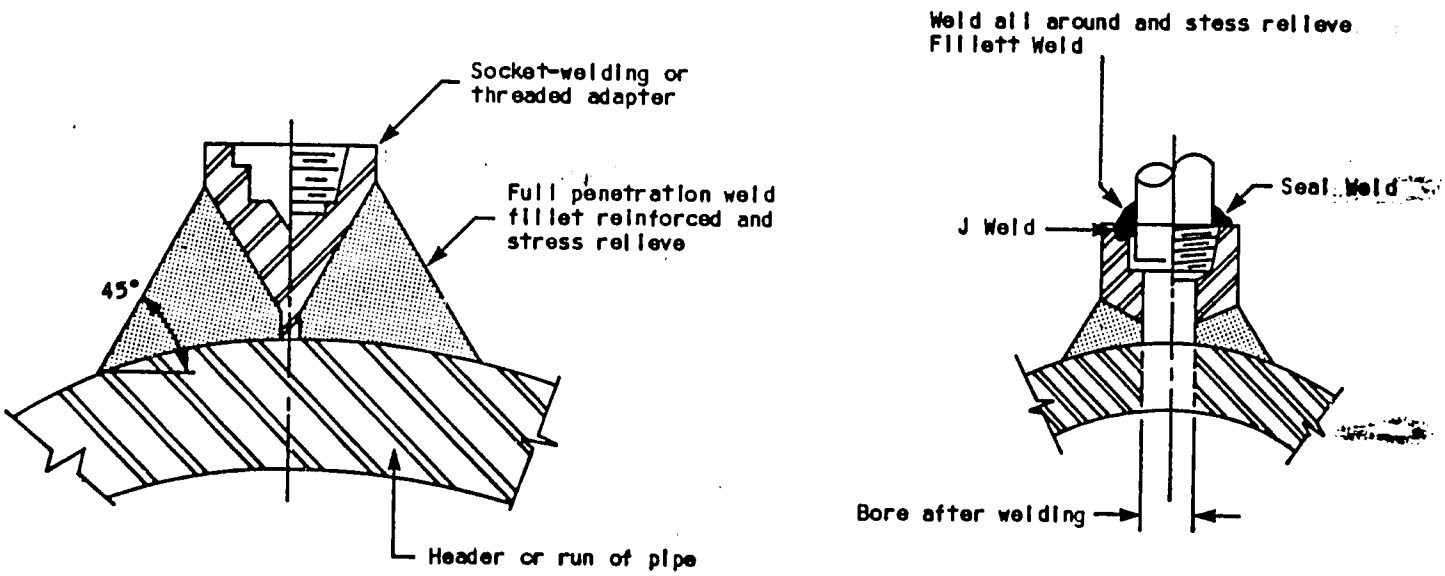

Branch Connection/Instrument Tap using special welded or threaded adapter where high pressure and temperature design conditions require fittings greater than ANSI B16.11 forged steel fittings.

1. Adapter wall thickness shall conform to Code Requirements for Pressure, Temperature, and Material Used.

WELD IN THERMOWELL
FIGURE D

TAG NUMBER(S)	WELL MAT'L	WELDOLET MAT'L	PIPE MAT'L	"A" DIM.	"B" DIM.	"C" DIM.	"L" DIM.	DESIGN PRESS.

DESIGN TEMP

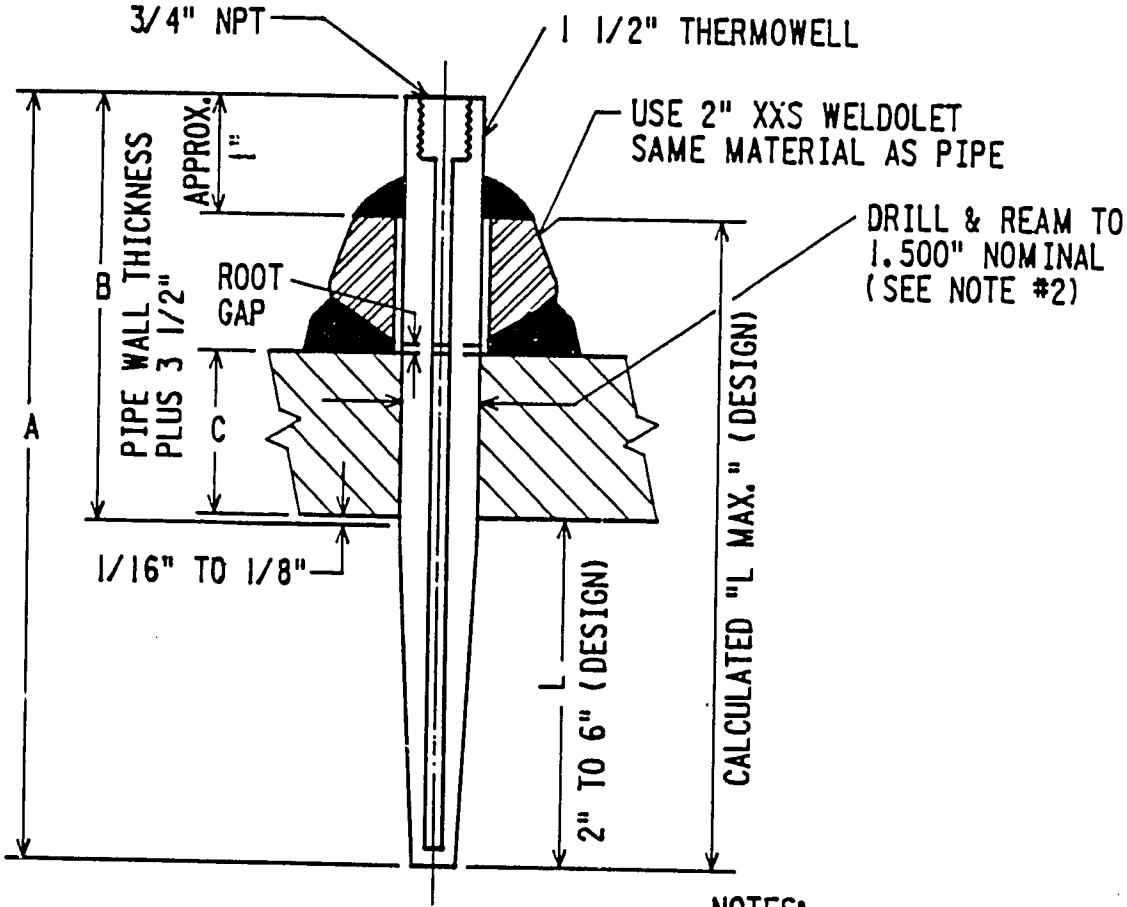

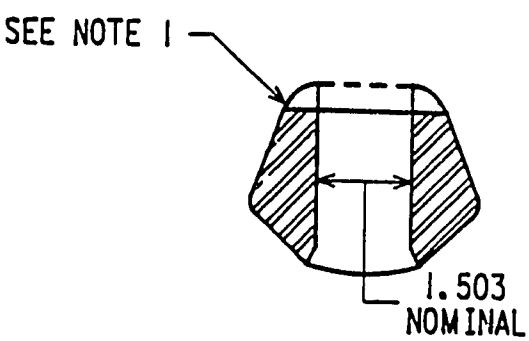

DETAIL " "
WELDOLET

NOTES:

1. GRIND OFF TAPERED LIP ON WELDOLET
2. MEASURE THERMOWELL DIAMETER WITH MICROMETER. DRILL AND REAM HOLE FOR A FORCED THERMOWELL FIT. THE FORCED FIT SHALL BE TIGHT, BUT NOT EXCESSIVE TO CAUSE DAMAGE TO THE THERMOWELL.
3. FOR WELLS IN HIGH VELOCIY SERVICE "L" DIMENSIONS SHALL BE CHECKED FOR LIMITATION OF MAXIMUM LENGTH BY PERFORMING THE FREQUENCY AND STRESS CALCULATIONS PER ASME PERFORMANCE TEST CODE 19.3-1974, "PART 3 TEMPERATURE MEASUREMENT". "L MAX." SHALL BE EQUAL OR LESS THAN CALCULATED MAXIMUM ALLOWABLE LENGTH.
4. IF CALCULATED "L MAX." LIMITS DESIGN COMPLIANCE REFER TO FIGURE "E".

WELD IN AND MECHANICALLY LOCKED (THREADED) THERMOWELL (NOTE 3) FIGURE E

TAG NUMBER(S)	WELL MAT'L	PIPE MAT'L	"A" DIM.	"B" DIM.	"C" DIM.	"L" DIM.	"T" DIM.	DESIGN PRESS.	DESIGN TEMP
							5/8"		

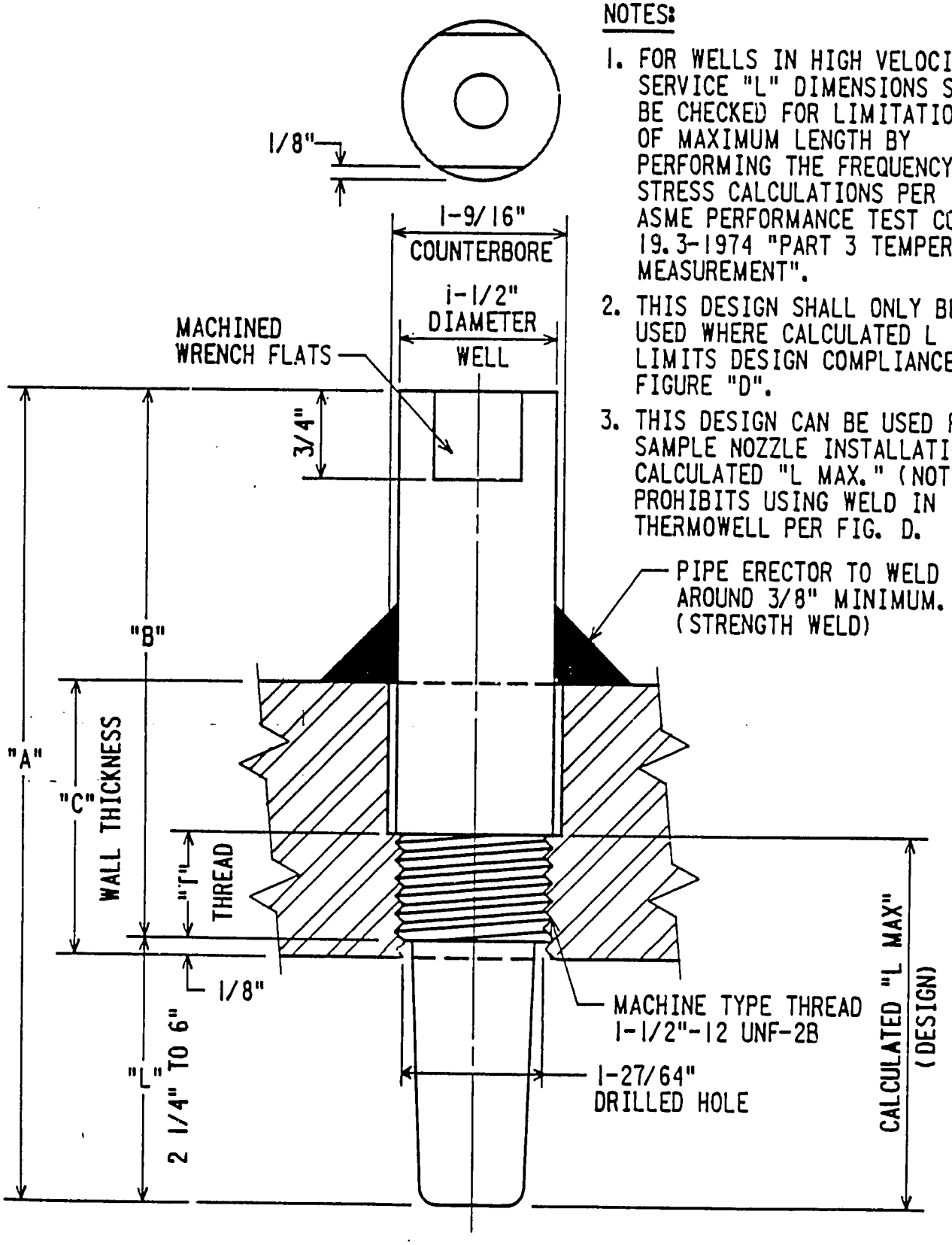

NOTES:

1. FOR WELLS IN HIGH VELOCITY SERVICE "L" DIMENSIONS SHALL BE CHECKED FOR LIMITATION OF MAXIMUM LENGTH BY PERFORMING THE FREQUENCY AND STRESS CALCULATIONS PER ASME PERFORMANCE TEST CODE 19.3-1974 "PART 3 TEMPERATURE MEASUREMENT".
2. THIS DESIGN SHALL ONLY BE USED WHERE CALCULATED L MAX. LIMITS DESIGN COMPLIANCE OF FIGURE "D".
3. THIS DESIGN CAN BE USED FOR STEAM SAMPLE NOZZLE INSTALLATION WHERE CALCULATED "L MAX." (NOTE 1) PROHIBITS USING WELD IN THERMOWELL PER FIG. D.

USI:1 56Z, 41CSIUZ.DGN:1
7SIC

FLUID SAMPLE NOZZLE INSTALLATION
FIGURE E

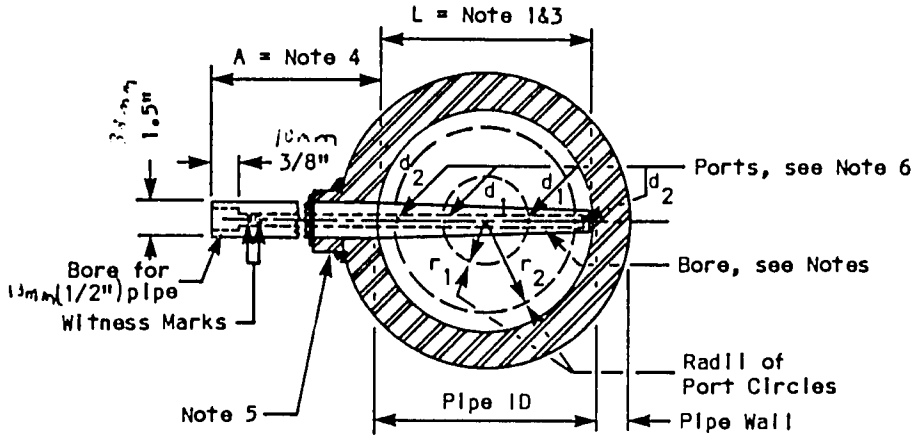

FOR LINES 6" AND SMALLER

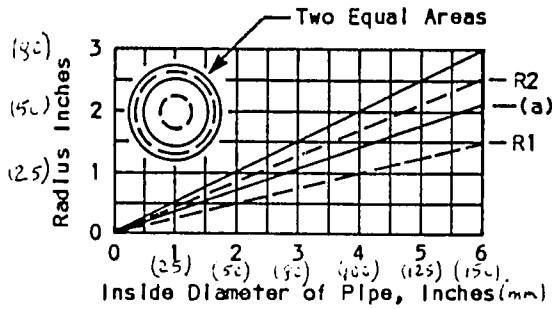

(a) Division Circle
(R1) & (R2) Port Circle

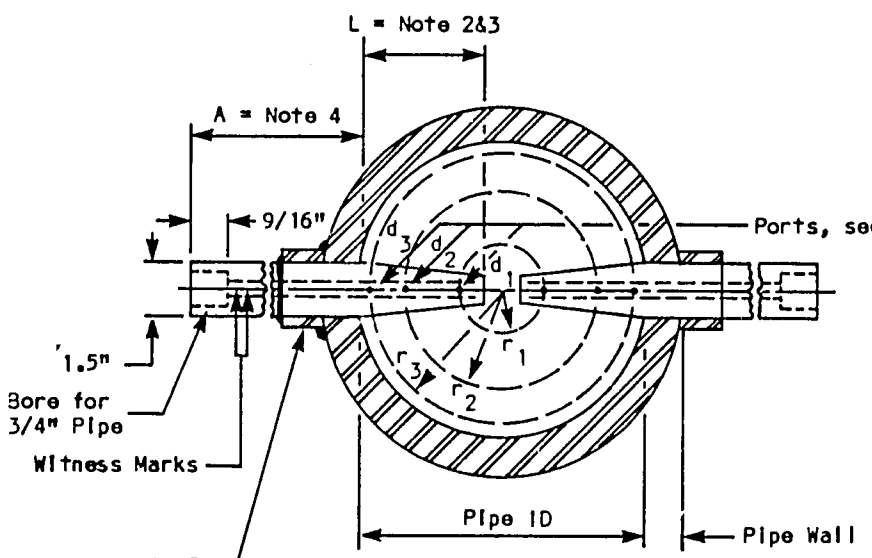

FOR LINES LARGER THAN 6"
STEAM SAMPLE NOZZLE/WELL

SELECT PORT RADIUS FROM CHART

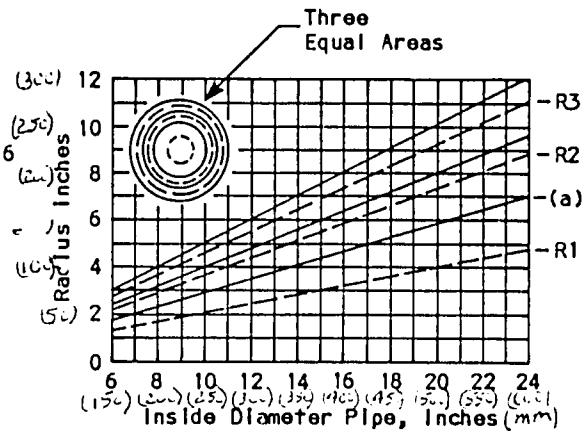

(a) Division Circle
(R1), (R2) & (R3) Port Circle

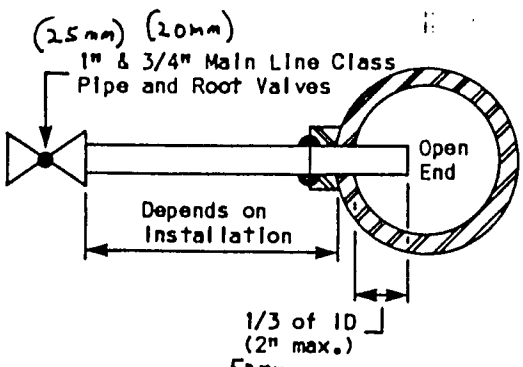

LIQUID SAMPLE NOZZLE

NOTES:

1. L = pipe ID minus 1/4". (6mm)
2. L = 1/2 pipe ID minus 1/4". (6mm)
3. All sample nozzle/wells will be checked for limitation of maximum length by performing the frequency and stress caclulations per ASME Performance Test Code 19.3-1974 "Part 3 Temperature Measurement."
4. A = pipe wall plus 3 3/8". (86 mm)
5. Refer [redacted] FIGURE D for Installation. [redacted]

NOTES: (continued)

6. Nozzle Port and Bore Calculations for Isokenetic Sample [redacted]

$*d = \text{Diameter of Ports} = \sqrt{\frac{a}{0.7854N}} = \text{in.}$

$b = \text{Diameter of Nozzle Bore} = \sqrt{\frac{3a}{1.5708}} = \text{in.}$ (mm

$a = \text{Total Port Area} = \frac{Af}{F} = \text{in.}^2$ (mm^2) [redacted]

A = Traverse Area of Pipe = 0.7854 x (Pipe ID)^2 = in.^{2} (mm^2)

f = Flow Rate of Total Sample Extracted = lb/hr kg/hr

F = Flow Rate of Fluid Through Pipe = lb/hr kg/hr

N = Total Number of Ports

*Minimum Port Dia. = 0.0625 [redacted]

LAKHRA POWER FEASIBILITY STUDY

SPECIFICATION M-18

TRAVELING WATER SCREENS

SPECIFICATION M-18
TRAVELING WATER SCREENS
TABLE OF CONTENTS

Article	Title	Page
1.0	DESCRIPTION OF WORK	1
2.0	WORK INCLUDED	1
3.0	WORK NOT INCLUDED	1
4.0	APPLICABLE CODES AND STANDARDS	2
5.0	SUPPLEMENTAL DATA	2
6.0	VENDOR DATA	2
7.0	DESIGN REQUIREMENTS	3
8.0	PERFORMANCE REQUIREMENTS	7
9.0	MATERIAL REQUIREMENTS	7
10.0	FABRICATION AND ASSEMBLY REQUIREMENTS	8
11.0	INSTALLATION REQUIREMENTS - NONE	8
12.0	PERSONNEL REQUIREMENTS	8
13.0	INSPECTIONS AND TESTS	9
14.0	CLEANING, CORROSION PROTECTION, AND COATING	9
15.0	MARKING AND IDENTIFICATION	10
16.0	PACKAGING, SHIPPING, AND STORAGE	10
17.0	ACCEPTANCE CRITERIA	11

ATTACHMENTS

1. Design Data Sheet - 1 page
2. Motor Specification
3. Motor Data Sheet
4. Specification Summary Data Sheets - 4 pages
5. Acoustic Data Sheet - 1 page
6. Indus River Water Data
7. Vendor Data Requirements and Submittal Schedule (later)

LAKHRA POWER FEASIBILITY STUDY
TECHNICAL SPECIFICATION M-18
TRAVELING WATER SCREENS

1.0 DESCRIPTION OF WORK

The work to be performed consists of designing, fabricating, and delivering to the jobsite two traveling water screens. The screens shall be of the vertical traveling type with screening medium consisting of basket panels carried on two strands of steel roller chain running over two sets of sprockets (or sprockets and footwheels). Screenings shall be carried by the baskets above the operating floor where they are to be removed by a series of sprays into a refuse trough. The screens will be used at two 350 MW power plants for the Water and Power Development Authority (WAPDA) to be located in Pakistan. The screens are to be used to screen debris from Indus River water upstream of two circulating water makeup pumps.

2.0 WORK INCLUDED

The following screens and accessories shall be provided:

2.1 Three traveling water screens complete with baskets, carrying chain, embedded metals, shafts, sprockets and footwheels, frame work, drive unit, and splash housings.

2.2 Driving motors for screens.

2.3 Spray water system including spray pipe and screen wash nozzles.

2.4 Three vertical centrifugal spray water pumps with drive motors and couplings.

2.5 Differential controller.

2.6 Special tools for maintenance.

3.0 WORK NOT INCLUDED

3.1 Remote alarm, compressed air supply, water supply, wiring, air piping and water piping beyond panel and screen

3.2 Anchor bolts, but screen manufacturer must furnish location diagram and size(s) for all anchor bolts.

3.3 Refuse trough.

3.4 Concrete intake structure supporting framework of traveling screen.

3.5 Field erection of traveling screen unit.

3.6 Electric motor starters and controls except as specifically called out and all external wiring and conduit.

3.7 Trash racks.

3.8 Stop gates.

3.9 Piping beyond the traveling screen spray system(s).

4.0 APPLICABLE CODES, STANDARDS, AND REGULATORY REQUIREMENTS

4.1 All materials shall be in accordance with ASTM specifications. Any exceptions will be subject to approval of the Buyer.

4.2 All pressure piping shall be in accordance with ANSI B31.1 "Power Piping."

4.3 The pumps shall be furnished in accordance with the latest Hydraulic Institute Standards.

4.4 ANSI S1.2, "Methods for the Physical Measurement of Sound."

4.5 National Electrical Manufacturer's Association (NEMA).

4.6 Application of codes and standards referenced herein requires the application of the latest issue date and of all addenda adopted as of the date of the purchase order. Later revisions may be involved only by mutual agreement between Purchaser and Vendor.

5.0 SUPPLEMENTAL DATA

The documents listed on the contents page as attachments are applicable to the work to the extent specified herein.

6.0 VENDOR DATA

6.1 Vendor data shall be furnished in accordance with the requirements indicated on the attached (later) Vendor Data Requirements and Submittal Schedule.

6.2 Vendor shall furnish Certified Vendor Drawings, and include a list of drawings by category, such as general arrangement, foundation data, and electrical connection. If titles of the Certified Vendor Drawings are unknown, bidder shall submit the estimated number of drawings he will submit in each category.

6.3 The Vendor shall provide (No. later) copies of an instruction book covering all equipment being furnished. The instruction book shall have hard front and back covers and have proper identification on the front cover as to contents.

6.4 Instruction books are not considered design manuals, and if any discrepancies arise between the Vendor's drawings and instruction books, or items omitted from the drawings which are contained in

the instruction book recommendations, the Vendor shall amend the instruction books or shall modify the installation at his own expense, whichever is deemed by the Owner as giving the most proper and operative final installation.

6.5 PERFORMANCE TEST REPORTS AND CERTIFICATIONS

The following performance reports and certifications shall be submitted to the Owner prior to acceptance of the Work:

a. Certified copies of all shop test data shall be forwarded to the Engineer for later distribution to the Owner.

b. The Vendor shall furnish procedures and instructions for all field installation and all required start-up tests and instruction books for the equipment being furnished.

6.6 SPECIAL TOOLS AND SPARE PARTS

6.6.1 The Vendor shall supply the following:

One set of any special tools required to operate and maintain his equipment. All tools shall be identified by name and number, and this number shall appear on drawings and instructions to indicate the application of the tools furnished and to permit the ordering of replacement tools.

6.6.2 The Vendor shall supply, with his proposal, pricing for 1- and 5-year supplies of spare parts.

7.0 DESIGN REQUIREMENTS

7.1 The traveling screens are for outdoor installation in a river intake structure. The screens shall be two speed direct flow-through type, electric motor drive, vertical screen installation.

7.2 Screen baskets shall have 10 mm (3/8") clear opening between wires. They shall be mounted on two lengths of endless chain running on upper and lower sprockets and shall carry screened material above the operating floor where they will be cleaned by screen wash pumps spray water washing the refuse into a trough.

7.3 A concrete refuse trough (by Others) will be provided common to all traveling water screens. All refuse shall be jetted to a local concrete pit (by Others) equipped with a water overflow (by Others) draining to a lower level.

7.4 Debris will be removed manually from the pit.

7.5 The screen baskets shall be unitized, welded construction and shall be securely attached to the chain. The baskets shall be readily removable for maintenance or replacement.

7.6 The carrying chain shall be shielded to prevent unscreened water from bypassing the baskets. The construction of the chain, and the housing and frame around the lower sprockets shall prevent debris from being carried through the sprocket housing.

7.7 The driving sprockets shall have hardened renewable tooth inserts. The lower sprockets shall have bearings suitable for underwater service.

7.8 The main frames shall be four post construction, stiffened and braced for rigidity. Heavy angle tracks shall be furnished for chain runways on the front or ascending side of the screen, designed to prevent wearing of the chain.

7.9 The screens and accessories shall be suitable for outdoor operation under the ambient conditions listed in Attachment 7 and with river water having the characteristics listed in Attachment 6.

7.10 ELECTRIC MOTOR DRIVES

7.10.1 The drives shall be balanced and designed to accommodate the full NEMA rated stalling torque of the motors without damage to any part of the drive or screen assembly. They shall have adequate power to start the screens at the maximum water depths under loads caused by head loss of one meter (3.3 feet) minimum between the upstream and downstream side of the screen. The drives shall be protected with a steel guard. The drive motors for the two traveling screens shall be two speed. All motors shall be furnished by the Vendor in accordance with Attachment 2, Motor Specification.

7.10.2 The drive unit speed reducer shall be herringbone or helical gear type, completely enclosed and oil bath lubricated with anti-friction bearings.

7.10.3 The drive from the slow speed reducer shaft to the screen head-shaft shall be by means of an oil bath lubricated steel roller chain mounted outside of the screen housing. The roller chain shall be protected with a guard.

7.10.4 The electric motor driving the speed reducer shall be protected from overheating by a cutout relay in case of stalling or lengthy running periods under overload conditions.

7.11 SPRAY SYSTEM

7.11.1 A spray system shall be furnished and equipped with a double row of nozzles to provide full width coverage of the baskets. Nozzles shall be individually threaded for mounting in tapped spray pipe and shall be nonclogging to the extent that the spray water supply may be taken from the water on the downstream side of the screen. Each header pipe shall be equipped with a 120 volt ac solenoid valve capable of opening or closing against spray pump differential shutoff head enabling the spray system to be automatically operated. These valves shall be of a type that will give

satisfactory trouble-free service when used with dirty Indus River water. Spray system shall be adequate to effectively remove debris from the screens at either low or high speed.

7.11.2 Each header pipe shall be served by an electric motor driven spray pump. Each motor shall be automatically started or stopped as the occasion demands. Manual shut-off valves shall be furnished by the Vendor.

7.11.3 Three full capacity centrifugal pumps shall be provided, each with a capacity of 19 l/s (300 gpm) and an operating or discharge pressure of 552 kPa (80 psig) when spraying with low river water level. Each pump shall serve one screen assembly. The pumps shall be piped so that each pump can serve either of the screens, if necessary.

7.11.3.1 The pumps shall have a constantly rising head curve from the design point to the shutoff head. The shutoff head shall not be more than 130 percent of design total developed head.

7.11.3.2 The pumps shall be suited for pumping Indus River water (see Attachment 6).

7.11.3.3 Pump motors shall be supplied by the Vendor and shall be in accordance with the Attachment 2 Motor Specification and Motor Data Summary Sheet.

7.11.4 The pumps shall also be provided with an automatic device which will start and stop the normal pump operation on a signal from the differential head controller of either one of the two screens. The pumps shall be piped so that either pump may be operated while the other pump is being overhauled or repaired. Each pump will be driven by an electric motor.

7.11.5 A splashproof housing fabricated of 5mm (.2 in.) molded fiberglass shall be bolted to the head section enclosing the spray system and refuse trough. It shall be watertight and provided with a quick-opening inspection door gasketed to prevent leakage. The door shall be equipped with four quick-opening star handknobs. Sufficient sealer shall be furnished for use between all bolted joints. The splash proof rear housing shall be fabricated of 5mm (.2 in.) molded fiberglass bolted to the head section.

7.12 DIFFERENTIAL CONTROLLER

7.12.1 Each screen shall be equipped with a differential controller which shall automatically indicate the head loss through the screen. When a head loss of approximately 0.15 meters (.5 ft) is reached, it shall automatically start the screen on low speed and turn on the spray water. An adjustable timer shall be incorporated to run the screen at least one and one third revolutions after the head loss has been relieved to assure that debris is completely removed and not just lifted out of the water and allowed to dry on the baskets. At a head loss of approximately 0.3 meters (1 ft), the

controller shall shift the screen to high speed. The controller shall include a "normally open" contact rated at 10 amps, 125 volts dc wired to terminal blocks for actuating a remote annunciator if the head loss continues to increase. It will simultaneously sound an alarm and give a visual signal when a head differential of 0.75 meters (2.5 ft) is reached. In addition, the operation of the screen shall be time controlled so that every 6 hours, regardless of head differential through the screen, the sprays shall operate and the screen shall revolve through two full revolutions. The differential controller and alarm set points shall be adjustable over an adequately wide range.

7.12.2 A Purchaser furnished recording chart will be installed in the control room to indicate each screen head differential. The Vendor shall supply a 4-20 milliamp dc electric transmitter for this recorder.

7.12.3 Each controller shall operate on an air supply of approximately 0.14 cubic meters (5 ft^3) (supplied at a minimum of 138 kPa (20 psig) and shall include the following components:

7.12.3.1 One drip well filter to eliminate excess moisture from the air supply.

7.12.3.2 Two differential pressure regulators with needle valves to allow adjustment of the air flows.

7.12.3.3 Two purgemeter scales to indicate the flow of air.

7.12.3.4 One indicating differential pressure switch including a calibrated dial indicating the head loss through the screen in inches. This switch is wired with two milliswitches. One milliswitch is wired to start the screen and to spray water at 0.15 (.5 ft.) meters differential head. The second milliswitch shall be wired to sound an alarm if the head loss should continue to increase to 0.75 meters (2.5 ft.). A third milliswitch shall be provided to shift the screen to high speed at 0.3 meters (1 ft.) head loss.

7.12.3.5 One hand-slow, hand-fast automatic selector switch to allow the screen to be operated either automatically or manually.

7.12.3.6 One time switch with automatic reset.

7.12.4 The above components shall be shop mounted, piped and wired with connections brought to a central terminal block for connection of Purchaser's wiring, in a NEMA 12 weatherproof floor-mounted panel equipped with a plexiglass observation window.

7.12.5 To obtain the proper adjustment of the main chain tensions, a chain tension indicator shall be furnished. Correct main chain tension is vital for proper operation of traveling screens. Chain tension is adjusted with the take-up screws which carry the head shaft bearing. A load indicating compression cell is mounted between the take-up nut and its bearing plate. Compression on the cells is

measured via strain gauges and the output of the strain gauge bridges on each compression cell is indicated directly in microamperes on the instrument panel.

7.12.6 A cage shall be provided which allows the compression cylinder to be utilized without placing it permanently under the take-up capstan. It is unnecessary to block up the head shaft installation. This allows the compression cells to be transferred easily from screen to screen.

7.13 ACOUSTIC REQUIREMENTS

7.13.1 The Vendor shall submit as part of his proposal a tabulation of octave band sound power levels in accordance with 7.12.3 below for the equipment being quoted without acoustic treatment or guarantee. The proposal shall be considered incomplete without this information.

7.13.2 The Vendor shall submit as part of his proposal an additional price for a guaranteed maximum sound level of 90 bA (90 decibels, a network weighted) when measured with a Type I precision sound level meter at slow response and at a distance of 1 meter (3 feet) in any direction from the nearest surface of the equipment. The Vendor shall also submit with his proposal a tabulation of octave band sound power levels in accordance with 7.12.3 below for the equipment in the sound attenuated condition.

7.13.3 The Vendor shall complete and submit as part of his proposal the attached Acoustic Data Summary Sheet (Attachment 5). It is preferred that the octave band levels be sound power levels in decibels with a reference power of 10 (exponent 12) watt. However, sound pressure levels in decibels with a reference pressure of 0.0002 microbars will be acceptable providing the weighting network and distance to the sound source are indicated. In the event acoustic data for the equipment quoted is not available, acoustic data for similar equipment will be acceptable. However, the equipment differences should be indicated and the Vendor's estimate of the acoustical effect of these differences should be indicated.

8.0 PERFORMANCE REQUIREMENTS

The screens, when installed and functioning, shall meet the design conditions stated in Attachment 1. The screens shall be designed to have a total head loss at low river water level and clean screens of no more than 0.10 meters (4 in.).

9.0 MATERIAL REQUIREMENTS

9.1 Vertical support of the main frame shall be fabricated of 10mm (3/8") minimum thickness carbon steel plate.

9.2 All main frame fasteners shall be stainless steel.

9.3 Screen baskets shall be of unitized construction, fabricated of 6mm (1/4") minimum thickness carbon steel plate. Screen wire shall be galvanized steel.

9.4 Carrying chain side bars shall be carbon steel, 10mm (3/8") minimum thickness. Rollers, pins and bushings shall be carbon steel, carburized and hardened.

9.5 The screen head section shall be of sturdy and compact construction, fabricated of carbon steel plate, shapes and sheet.

9.6 The drive from the slow speed reducer shaft to the screen headshaft shall be by means of a steel roller chain. The chain shall operate outside of the screen housing, protected with a guard made of 5mm (3/16") thick molded fiberglass.

9.7 The headshaft shall be cold-finished steel. Headshaft bearings shall be cast iron with bronze bushing and fitted with alemite fittings. Headshaft position shall be adjustable by means of type 416 stainless steel screws and bronze nuts with suitable anti-friction thrust bearings under the nuts. The headshaft sprockets shall be cast iron and fitted with renewable heat-treated carbon steel tooth inserts. The footshaft shall be cold-finished steel. The footshaft wheels shall be cast iron.

9.8 The screen boot section shall be constructed of 10mm (3/8") minimum thickness carbon steel plate.

9.9 Cast iron guides shall be furnished for embedding in the concrete walls of the screen well.

9.10 The spray system shall be furnished consisting of carbon steel piping with brass flat spray nozzles.

9.11 Alternate materials shall be proposed if in Vendor's judgement the specified material(s) seem(s) unsuitable for the job in the environment specified herein.

10.0 FABRICATION AND ASSEMBLY REQUIREMENTS

See 9.0, Material Requirements.

11.0 INSTALLATION REQUIREMENTS

None

12.0 PERSONNEL REQUIREMENTS

The Vendor shall include supervision of installation and the start-up engineering services priced separately in his proposal.

13.0 INSPECTIONS AND TESTS

The following inspections and tests shall be performed.

13.1 The equipment covered by this Specification shall be subject to inspection by the Purchaser and the Owner during fabrication, construction, testing, and prior to shipment.

13.2 Hold point shall be defined as a check point in a sequential operaiton at which certain data are taken, inspections made, or approval required before the next sequential step can be taken.

13.3 Inspeciton and test plan shall be defined as a listing, with optimum sequencing, of all the inspections and test required to be performed for a specific item, component, structure or system.

13.4 Shop performance tests conducted to establish guaranteed performance shall be proposed and carried out by the Vendor in accordance with the methods and procedures outlined in the latest applicable ASME Test Code for Centrifugal Pumps (PTC 8.2) and applicable publications and as mutually agreed between Owner and Vendor. Vendor shall submit, within 4 weeks after award, testing procedures for approval by the Purchaser's Engineer.

13.5 The shop performance tests shall be conducted with each pump and motor assembly to demonstrate:

a. Total head produced by the pump.

b. The capacity, or rate of flow.

c. Power input to the pump.

d. Efficiency.

13.6 The Vendor shall provide a qualified Engineer to supervise and conduct the test, and submit a complete report of the test.

14.0 CLEANING, CORROSION PROTECTION, AND COATING

14.1 Painting: All ferrous metal parts shall be free of rust and loose mill scale and shall receive one shop coat of zinc-chromate iron oxide alkyd resin primer. Chain shall receive one shop coat of slush oil. Motors and reducers shall be furnished with the manufacturer's standard paint.

14.2 Any stainless steel, nonferrous or galvanized material shall not be painted. The cast iron guides shall remain unpainted.

14.3 Tropicalization: In choosing materials and their finishes due regard shall be given to the ambient conditions in which equipment is to operate. Consideration shall be given to the hot climate and a humid and or dust laden atmosphere.

a2

15.0 MARKING AND IDENTIFICATION

15.1 Each package, skid, box and crate shall be marked on the outside with the following information so that it is readily visible:

a. (Owner's name)
(Project identification)
(Address)
(City, state, zip code)

b. Purchase Order number:

c. Weight:

d. Equipment Nos. as applicable:

15.2 Each unit shall be identified with a tag number. The number shall be permanently imprinted with at least 5mm (3/16") high letters on a 22-gage stainless steel tag. The tag shall be attached to the cnlosure with pins of a similar material.

15.3 Each unit shall have a permanently secured data plate made from at least 22-gage stainless steel, permanently imprinted with 5mm (3/16") high letters, and containing the following information:

a. Manufacturer's name and addres:

b. Model Number:

c. Serial Number:

d. Date of manufacture:

e. Duty:

f. Weight:

15.4 The data plate shall be located where it is readily visible and shall be securely attached with pins of a material similar to the plate.

15.5 Equipment item numbers shall be utilized by the VENDOR in designating equipment. Numbers so assigned by the VENDOR may be reassigned at the option of the Engineer.

15.6 Items furnished under these specifications, but not identified herein, shall have tags inscribed as directed by the Engineer.

16.0 PACKAGING, SHIPPING AND STORAGE

16.1 All items shall be adequately crated, wrapped or otherwise protected so that shipment and delivery may be made without damage.

16.2 All flanges shall be protected by bolted-on wooden covers and all threaded openings shall be closed with caps or plugs.

16.3 A list and description of the contained material shall be plainly marked on the outside of each shipping container. All individual items shall be tagged.

16.4 Bolts, nuts, fittings and other small parts shall be separately boxed or packaged for shipment and properly tagged and identified.

16.5 Three copies of packing lists and shipping memoranda (special handling requirements, storage instructions, etc.) shall be mailed forty-eight hours before shipment is made. Packing lists shall include Vendor's mark number and Owner's tag number. Copies of shipping papers shall be mailed as follows (later):

16.6 Unless otherwise specified by the Vendor, storage of the equipment shall be outdoors. The Vendor shall inform the Owner of any special storage requirements sufficiently in advance of shipping of the equipment to allow for necessary preparation.

17.0 ACCEPTANCE CRITERIA

The Vendor shall ensure that he has complied with the following requirements before submitting the work for acceptance:

17.1 Submittal of pump performance reports and certified pump curves.

17.2 Submittal of all Vendor data required per Specification Summary Sheets 1-4 Attachment 4, Acoustic Data Summary Sheet Attachment 5, and Motor Data Sheet Attachment 3.

ATTACHMENT 1

TRAVELING WATER SCREENS

DESIGN DATA

Number required	3
Capacity each	475 l/s (minimum) (7,500 gpm)
Pool Elevation High Water	20m (65.6 ft)
Pool Elevation Low Water	15m (49.2 ft)
Pool Bottom Elevation	11.35m (37.2 ft)
Max. Water Velocity @ Lowest Water Elevation Through Each Channel	.75 m/s (approx.) (2.46 ft/s)
Well Width	2m (6.6 ft)
Well Depth	8m (26.25 ft)
Min. Submerged Depth of Screen	3.65m (12 ft)
Screen House Floor Elev.	20.5m (67.25 ft)

ATTACHMENT 2

Refer to Electrical Motor Specifications E-1 and E-2.

ATTACHMENT 3

Refer to Motor Data Sheets included in Electrical Motor Specifications E-1 and E-2.

ATTACHMENT 4

TRAVELING WATER SCREENS

SUMMARY SHEETS

Vendor		
Proposal No.		
Proposal Date		
Location		
Number of Screens		2
Capacity Per Screen; l/s (gpm)		475 (7,500)
Well Depth ; m (ft)		
Well Width ; m (ft)		
Distance Between Sprockets		
Velocity Thru Screens; m/s (ft/s)		
Screen Speed; m/s (ft/s)		
<u>Baskets</u>		
No. Per Screen		
Size		
Wire Gauge		
Wire Material		
Square Opening Clear Size		
Basket Frame Thickness mm (in)		
<u>Carrying Chain</u>		
Chain Pitch		
Side Bars, Size and Material		
Chain pins, Material and Diameter mm (in)		

Bushings, Material	_____	_____
Rollers, Material and Diameter mm (in)	_____	_____
Attachment Pins, Material and Diameter mm (in)	_____	_____
Alemite Fittings; Yes or No	_____	_____
Shafts		
Headshaft, Material and Diameter mm (in)	_____	_____
Headshaft Bearings, Type and Size	_____	_____
Footshaft Material and Diameter mm (in)	_____	_____
Chain Take-up, Type	_____	_____
Sprockets		
Headshaft, Material	_____	_____
Footshaft, Material	_____	_____
Replaceable Headshaft Sprocket Tooth Inserts; Yes or No	_____	_____
Framework		
Number of Posts	_____	_____
Metal Thickness mm (in)	_____	_____
Chain Guide Material	_____	_____
Housing		
Material	_____	_____
Thickness mm (BWG)	_____	_____
Type	_____	_____
Inspection Door Site	_____	_____
Drive		
Speed Reducer Manufacturer and Model	_____	_____
Type Chain Tensioner	_____	_____

Chain Guard Material and Thickness mm (BWG)	_____	_____
Shear Pin, Material	_____	_____
Motor		
Manufacturer	_____	_____
Type	_____	_____
Type of Connection From Motor to Speed Reducer	_____	_____
Horsepower KW (HP)	_____	_____
Speed	_____	_____
Volts, Phase, Hertz	_____	_____
Spray System		
Number of Nozzles	_____	_____
Nozzle Material	_____	_____
Water, Total l/s (gpm) and Spray Header Pressure KPa (psi)	_____	_____
Control Valve Type and Operation	_____	_____
Differential Controller		
Type	_____	_____
Enclosed Control Panel; Yes or No	_____	_____
Painting of Housing (Material and Thickness)	_____	_____
Weight of Screens, Motor, and Drive	_____	_____
Unit price Per Feet for Increasing Channel Depth and Number of Panels	_____	_____
Screen Wash Water Pump		
Manufacturer	_____	_____
Model Number	_____	_____
Number of Pumps Provided	_____	_____

Design Flow at Low Water Level l/s (gpm)	_____	_____
Pressure at Design Flow - KPa (psi)	_____	_____
Brake Horsepower at Design Conditions, KW (HP)	_____	_____
Efficiency at Design Capacity, %	_____	_____
Shutoff Head, KPa (psi)	_____	_____
NpSH Required at Impeller Centerline, m (ft)	_____	_____
<u>Materials</u>		
Casing	_____	_____
Impeller	_____	_____
Shaft	_____	_____
Bearings	_____	_____
Discharge Nozzle Size, mm (in)	_____	_____
<u>Coupling</u>		
Manufacturer	_____	_____
Type	_____	_____
Model Number	_____	_____
<u>Motor Manufacturer</u>		
Type	_____	_____
KW (HP)	_____	_____
Speed	_____	_____
Volts/Phase/Hertz	_____	_____
<u>Included Days of Superintendence of Installation</u>	_____	_____
<u>Estimated Number of Days to Erect Per Screen</u>	_____	_____

Firm Until	_____	_____
Delivery (Weeks After Approval)	_____	_____
FOB Destinationl Yes or No	_____	_____

ATTACHMENT 5

ACOUSTIC DATA SUMMARY SHEET

Octave Band Geometric Mean Frequency (Hertz)	Equipment Without Acoustic Treatment or Guarantee	Equipment With Maximum Sound Level Guarantee of 90 dBA at 1 meter (3 feet)
63	_____	_____
125	_____	_____
250	_____	_____
500	_____	_____
1000	_____	_____
2000	_____	_____
4000	_____	_____
8000	_____	_____

Kind of levels given, indicate which of the following:

Sound Power Levels, re 10 (exp -12) watt	_____	_____
Sound Pressure Levels re 2x10 (exp -4) microbars	_____	_____

If sound pressure levels are given, indicate both of the following:

Weighting network use A, B, C, or Linear (None)	_____	_____
Distance to sound source Feet or Meters	_____	_____

Vendor Comments: _____

_____

_____

_____

ATTACHMENT 6

INDUS RIVER WATER DATA

Measuring Item	Unit	Value
Temperature	°C	20 to 35°C (68°F - 95°F)
pH		7.2 to 7.8
Conductivity	Micr-Mho/cm	0.25×10^3 to 0.4×10^3
Total Solid	mg/l	320 to 450
Turbidity	mg/l	680 to 3,500
M-Alkalinity	mg/l as $CaCO_3$	100 to 140
Chloride	mg/l as Cl	36 to 56
Total Hardness	mg/l as $CaCO_3$	96 to 120
Calcium Hardness	mg/l as $CaCO_3$	80 to 110
Magnesium Hardness	mg/l as $CaCO_3$	25 to 45
Sulphate	mg/l as SO_4	64 - 100
Total Iron Ion	mg/l as Fe	0.1 - 1.0
Suspended Solids	mg/l	25 to 2,600
BoD	mg/l	3 to 12.5
D.O.	mg/l	6.0 to 14.0
Sodium	mg/l as Na	2.4 to 24.0

ATTACHMENT 7

AMBIENT CONDITIONS

Dry Bulb Maximum	46.8°C (116.2°F)
Dry Bulb Minimum	5.7°C (42.3°F)
Relative Humidity	81%
Sand Storm Wind Velocity (typical)	44.5m/sec. (105.6 MPH)

TECHNICAL SPECIFICATION S-1A

FOR

SUPPLY OF CONCRETE

LAKHRA POWER FEASIBILITY STUDY

LPS/B1374/D1

SPECIFICATION S-1A

FOR

SUPPLY OF CONCRETE

TABLE OF CONTENTS

		Page
1.0	DESCRIPTION OF WORK	1
2.0	WORK INCLUDED	1
3.0	WORK NOT INCLUDED	1
4.0	APPLICABLE CODES, STANDARDS AND REGULATORY REQUIREMENTS	1
5.0	SUPPLEMENTAL DATA (NONE)	4
6.0	VENDOR DATA	4
7.0	DESIGN REQUIREMENTS	5
8.0	PERFORMANCE REQUIREMENTS (NONE)	6
9.0	MATERIAL REQUIREMENTS	6
10.0	FABRICATION AND ASSEMBLY REQUIREMENTS	7
11.0	INSTALLATION REQUIREMENTS (NONE)	8
12.0	PERSONNEL REQUIREMENTS (NONE)	8
13.0	INSPECTIONS AND TESTS	8
14.0	CLEANING, CORROSION PROTECTION AND COATING (NONE)	11
15.0	MARKING AND IDENTIFICATION	11
16.0	PACKAGING, SHIPPING AND STORAGE	11
17.0	ACCEPTANCE CRITERIA	11

SPECIFICATION S-1A
FOR
SUPPLY OF CONCRETE

1.0 DESCRIPTION OF WORK

The scope of services to be performed consists of supplying all materials, labor, equipment, supervision, tools, transportation, mix design, detailing, testing, and incidentals to batch, mix and deliver concrete to the power plant jobsite as described in this Specification.

2.0 WORK INCLUDED

2.1 The Work shall include, but not be necessarily limited to, the following items:

2.1.1 Furnish concrete mix designs and test results for the concrete mixes to be supplied from an independent laboratory testing agency including slump tests, and admixture types and quantities.

2.1.2 Furnish all concrete materials that meets the concrete mix design provisions as noted in 2.1.1.

2.1.3 Furnish all labor, equipment, supervision, tools, incidentals, and transportation to batch, mix, and deliver the concrete to the placement location.

2.2 The Work shall be planned and provide adequately for both usual and unusual conditions such as: severe precipitation, low or high temperatures, high winds, etc., so as to supply concrete as required to the placement location.

3.0 WORK NOT INCLUDED

3.1 CONCRETE PLACEMENT

Concrete placement is not covered by this Specification.

4.0 APPLICABLE CODES, STANDARDS AND REGULATORY REQUIREMENTS

4.1 All work specified herein and covered by this Specification shall comply with all applicable portions of the following codes, standards, and regulations, and be in accordance with Federal laws, state laws, and local laws:

4.1.1 American Concrete Institute (ACI)

ACI 211.1	Standard Practice for Selecting Proportions for Normal and Heavy Weights and Mass Concrete
ACI 214	Recommended Practice for Evaluation of Strength Test Results of Concrete
ACI 301	Specifications for Structural Concrete for Buildings
ACI 304	Recommended Practice for Measuring, Mixing, Transporting and Placing Concrete
ACI 305R	Recommended Practice for Hot Weather Concreting
ACI 306R	Recommended Practice for Cold Weather Concreting
ACI 318	Building Code Requirements for Reinforced Concrete

4.1.2 American Society for Testing of Materials (ASTM)

ASTM C29	Standard Method of Test for Unit Weight and Voids in Aggregate
ASTM C33	Standard Specification for Concrete Aggregates
ASTM C39	Standard Test Method for Compressive Strength of Cylindrical Concrete Specimens
ASTM C94	Standard Specification for Ready-Mixed Concrete
ASTM C138	Standard Test Method for Unit Weight, Yield and Air Content (Gravimetric) of Concrete
ASTM C143	Standard Test Method for Slump of Portland Cement Concrete
ASTM C150	Standard Specification for Portland Cement
ASTM C172	Sampling Freshly Mixed Concrete
ASTM C173	Standard Test Method for Air Content of Freshly Mixed Concrete by the Volumetric Method
ASTM C186	Standard Test Method for Heat of Hydration of Hydraulic Cement

ASTM C192	Standard Method of Making and Curing Concrete Test Specimens in the Laboratory
ASTM C226	Standard Specification for Air Entraining Additions for Use in the Manufacture of Air-Entraining Portland Cement
ASTM C231	Standard Test Method for Air Content of Freshly Mixed Concrete by the Pressure Method
ASTM C233	Standard Method of Testing Air Entraining Admixtures for Concrete
ASTM C260	Standard Specification for Air Entraining Admixtures for Concrete
ASTM C451	Standard Test Method for Early Stiffening of Portland Cement (Paste Method)
ASTM C456	Standard Test Method for Processing Additions for Use in the Manufacture of Hydraulic Cements
ASTM C494	Standard Specification for Chemical Admixtures for Concrete
ASTM C618	Standard Specification for Fly Ash and Raw or Calcined Natural Pozzolan for Use as a Mineral Admixture in Portland Cement Concrete

4.1.3 National Bureau of Standards (NBS)

Handbook 44	Specification, Tolerance and Other Technical Requirements for Commercial Weight and Measuring Devices

4.1.4 National Ready Mixed Concrete Association (NRMCA)

Certification of Ready Mixed Concrete Production Facilities

4.2 CONFLICTS

4.2.1 The aforementioned codes, regulations, and specifications shall govern except where such requirements are less conservative. than the comparable requirements of this Specification, in which case, this Specification shall govern.

4.2.2 All conflicts shall be presented in writing to the Owner immediately, or if possible 3 days prior to beginning the Work affected by the conflict.

4.3 AVAILABILITY OF STANDARDS AND SPECIFICATIONS

4.3.1 These reference codes, standards, and specifications are available from the American Concrete Institute, P.O. Box 19150, Redford Station, Detroit, Michigan 48219; from the American Society for Testing and Materials, 1916 Race Street, Philadelphia, Pennsylvania 19103; and from the National Bureau of Standards, Commerce Department, Gaithersburg, Maryland 20760.

4.3.2 The Vendor, having reference to these documents, shall maintain copies of each at the batch plant at all times.

4.4 REFERENCE TO STANDARDS

4.4.1 For convenience, reference is made in succeeding sections of this Specification to various specific portions of the codes, standards, and specifications and certain modifications and additions are made.

4.4.2 Neither the specific references nor any modifications and additions are intended to deemphasize any other portion of these codes, standards, and specifications.

4.5 APPLICABLE ISSUE DATE

Application of codes and standards referenced herein requires the application of the latest issue date and of all addenda adopted as of the date of the purchase order. Later revisions may be invoked only by mutual agreement between Purchaser and Vendor.

5.0 SUPPLEMENTAL DATA

None

6.0 VENDOR DATA

6.1 Vendor shall furnish concrete mix design and laboratory test results from an Independent Testing Agency for Approval.

6.2 Vendor shall furnish his proposed concrete material(s) sources and locations with his Proposal.

7.0 DESIGN REQUIREMENTS

7.1 CONCRETE MIX

7.1.1 Ready-mixed concrete shall be in accordance with ASTM C94.

7.1.2 The Vendor shall obtain concrete mixes and tests designed in accordance with ACI 318, Section 4, for each class of concrete. Concrete mixes shall be designed by a qualified independent testing laboratory using representative samples of aggregate and cement. The designing laboratory shall submit its design in a written report to the Owner for review. The report shall state the mix proportions used and the slump and compressive strength of each class of concrete as determined by laboratory tests. Compressive tests shall conform to ASTM C39 "Standard Method of Test for Compressive Strength of Cylindrical Concrete Specimens." All costs of laboratory mix design and associated testing shall be paid for by the Vendor as part of the cost of his work.

7.1.3 Concrete shall use Type I, Type II, or Type V cement, be homogeneous, readily placeable and uniformly workable and will be designed in accordance with ACI 211.1 to attain properties of strength, durability and placeability in conformance with the following requirements:

a. The maximum size of coarse aggregate specified in the mix design will not be larger than 40 mm (1 1/2") for footings, mats and 20 mm (3/4") for floor slabs, walls, and etc.

b. The minimum concrete strengths and allowable slumps for which the different concrete classes will be designed shall be as follows:

Class Concrete	Minimum 28 Day Compressive Strength kPa (psi)	Allowable Slump mm (inches)
AA	27,580 (4,000)	75 ± 25 (3 ± 1)
A	20,685 (3,000)	75 ± 25 (3 ± 1)
B (Lean Fill)	13,790 (2,000)	75 ± 25 (3 ± 1)

c. The water-cement ratio, including liquid admixtures and free moisture in all aggregates shall not exceed 0.50.

d. The fly ash content shall replace no more than 20 percent, by weight, of the cement.

8.0 PERFORMANCE REQUIREMENTS

None

9.0 MATERIAL REQUIREMENTS

9.1 GENERAL

9.1.1 The concrete shall be composed of Portland Cement, fly ash, coarse and fine aggregate, and water.

9.1.2 Each ingredient shall be a single brand from a single source. No change in brand or source shall be made without prior written approval.

9.1.3 The specific class(es) of concrete will be as specified on the Engineering Drawings.

9.2 CEMENT

Cement shall be Type I, Type II, or Type V Portland Cement and shall meet the requirements of ASTM C-150. The specific cement type will be as specified on the Engineering Drawings.

9.3 AGGREGATE

Coarse and fine aggregate shall conform to ASTM C33.

9.4 WATER

Mixing water shall be fresh water and meet the requirements of ASTM C94. The use of sea water will not be permitted.

9.5 ADMIXTURES

9.5.1 Admixtures containing calcium chloride or other chlorides, sulfides, or nitrates shall not be used.

9.5.2 Chemical and water-reducing admixtures shall meet the requirements of ASTM C494.

9.5.3 Water-reducing admixtures shall be compatible for use in the same concrete mix.

9.6 FLY ASH

Fly ash shall meet the requirements of ASTM C618 for Class F fly ash, except that the loss on ignition shall not exceed 6 percent.

10.0 FABRICATION AND ASSEMBLY REQUIREMENTS

10.1 BATCHING, MIXING AND TRANSPORTING CONCRETE

10.1.1 All concrete shall be batched and mixed on site and transported to the placement location(s) in accordance with ASTM C94 and ACI 304 unless otherwise specified herein.

10.1.2 Batch plant facilities and truck mixers shall meet the requirements of the National Ready Mixed Concrete Association as specified in their pamphlet entitled "Certification of Ready-Mixed Concrete Production Facilities."

10.1.3 Equipment and methods for mixing concrete shall be such that thoroughly mixed concrete of uniform quality is produced.

10.1.4 Any mixer leaking mortar, or causing waste of materials through faulty charging, shall be taken out-of-service and kept out until satisfactory repair and improvements have been made.

10.1.5 Before beginning operations each day, accumulations of hardened concrete and foreign materials shall be removed from the inner surfaces of the drum, charging and discharging openings and chutes.

10.1.6 Retempered concrete shall not be used.

10.1.7 Discharge of the concrete shall be completed within 3/4 to 1 hour or before the drum has revolved 300 revolutions, whichever comes first. Both the clock and the counter shall be started when the mixing water comes in contact with the cement.

10.1.8 Truck mixers shall be in good mechanical condition, with no leaking valves or leaking connections in the water supply lines.

10.1.9 Truck mixers shall be of the revolving drum type, so constructed that the concrete can be thoroughly mixed to insure a uniform distribution of materials throughout the mass.

10.1.10 Concrete completely mixed in a truck mixer shall be mixed for 70 to 100 revolutions at the mixing speed designated by the truck manufacturer.

10.2 HEATED CONCRETE

The Vendor shall supply facilities of sufficient capacity to heat water and aggregates for heated concrete. The Vendor shall follow the practices of ACI 306 for furnishing concrete during cold weather.

10.3 CONCRETE REQUIRING COOLING

The Vendor shall provide for and follow the practices of ACI 305 for concrete requiring cooling.

11.0 INSTALLATION REQUIREMENTS

None

12.0 PERSONNEL REQUIREMENTS

None

13.0 INSPECTIONS AND TESTS

13.1 INSPECTION

13.1.1 The Owner's Representative may inspect the portland cement either at the cement plant and/or at the point of delivery to the batch plant.

13.1.2 Inspection of batching and mixing facilities may be made by the Owner's Representative at the batching plant and/or at the point of delivery.

13.1.3 The Vendor shall cooperate with the Owner's Representative when inspections are requested.

13.1.4 The Vendor shall perform a periodic checkout of any batch plant control system when so requested by the Owner's Representative.

13.1.5 The Vendor shall have a minimum of 10 standard 23 kg (50-pound) weights, meeting the requirements of the National Bureau of Standards, readily available for calibrating and testing weighing equipment.

13.2 AUTHORITY TO REJECT

The Owner will have authority to reject all materials and workmanship not conforming to this Specification any time defects are found during the progress of the work. The Vendor shall promptly repair or replace the same at the direction of the Owner.

13.3 RECEIPT OF DEFECTIVE MATERIAL

If upon receipt of the material at the destination or during placing, any defective material is found, the Vendor shall

replace this material free of charge, FOB jobsite. The defective material will be documented by the Owner. Samples of the defective materials will be taken by the Owner.

13.4 LIABILITY FOR DEFECTIVE MATERIAL

If the Owner's Representative, through oversight or otherwise, has accepted material or work which is defective or does not conform to this Specification, this material, no matter in what state of completion, may be rejected by the Owner.

13.5 TESTING OF CEMENT

13.5.1 When requested by the Owner, the Vendor shall sample and utilize an independent testing agency to test the portland cement used in the concrete in accordance with Section 8 and 9 of ASTM C150. The test results shall be documented and forwarded to the Owner.

13.5.2 The following periods from time of sampling shall be allowed for completion of testing:

1-day test	6 days
3-day test	8 days
7-day test	12 days
28-day test	33 days

13.5.3 All cement stored in bulk at the mill for more than 6 months, or cement in bags stored locally for more than 3 months after completion of the tests, may be retested before use and may be rejected if it fails to conform to any of the requirements of this Specification.

13.5.4 At the request of the Owner the Vendor shall obtain from the cement manufacturer a statement in writing indicating the nature, amount, and identity of any processing addition used in the production of the cement. Also, if requested the cement manufacturer shall supply test data showing compliance of any such processing addition with ASTM C465.

13.5.5 When requested by the Owner, the Vendor shall furnish a certification from the cement manufacturer that the cement was tested in accordance with and conforms to the requirements of ASTM C150. The certification along with a report of the test results shall be furnished at the time of shipment.

13.6 TESTING OF CONCRETE

13.6.1 Testing of concrete will be done in accordance with the codes, standards, and specifications as referened in Section 4.0 of this Specification.

13.6.2 The Vendor's Independent Testing Agency will determine the mix design and test all cylinders and will supply copies of the test reports to the Owner. Such testing will be in accordance with ASTM C39.

13.6.3 The Owner's Representative may reject a batch of concrete if the compressive strength and slump of the concrete does not meet the specified design limits specified in Subsections 7.1.3 and 13.6.7 of this Specification.

13.6.4 The concrete cylinders to be used in compression tests will be made and cured in accordance with ASTM C192 by an Independent Testing Agency.

13.6.5 Normally not less than four cylinders will be made for each test and not less than one test for each 100 cu. meters or major portion thereof of each class of concrete furnished.

13.6.6 Additional cylinders may be required for testing when the temperature falls below 4.5°C (40°F) or above 49°C (120°F).

13.6.7 The strength level of an individual class of concrete will be considered satisfactory if both of the following requirements are met:

a. The averge of all sets of three consecutive strength tests equal or exceed the specified compressive strength.

b. No individual strength test (averge of two cylinders) falls below the specified compressive strength by more than 3,450 kPa (500 psi).

13.6.8 The Owner will have the right to order a change in the proportions of the water content for the remaining portion of the structure if the strength of the laboratory control cylinders for any portion of the structure falls below the compressive strength as specified.

13.6.9 The Owner may order concrete removed and replaced at the expense of the Vendor if the tests specified indicate the concrete is below the design compressive strength due to improper batching, mixing, and transporting or the use of materials that do <u>not</u> meet the requirements of this Specification.

13.6.10 The Vendor is responsible for any in-process testing he deems necessary to ensure that the concrete delivered meets the requirements of this Specification.

14.0 CLEANING, CORROSION PROTECTION AND COATING

"None."

15.0 MARKING AND IDENTIFICATION

Batch tickets shall be provided in accordance with the provisions of ASTM C94.

16.0 PACKAGING, SHIPPING, AND STORAGE

16.1 STORAGE AND HANDLING

16.1.1 Cement, aggregates, and admixtures shall be handled and stored in accordance with the requirements of ACI 301, Section 2.5 so as to prevent deterioration or contamination.

16.1.2 All cement which has become caked, partially set or otherwise deteriorated, damaged or contaminated shall not be used.

16.1.3 All cement with a temperature in excess of 74°C (165°F) shall not be used.

16.1.4 All aggregates shall be stored and handled so as to preserve the gradation and cleanliness of the material.

16.1.5 Any segregation and/or contamination is cause for rejection. No unsuitable material shall be used in concrete furnished under this Specification.

16.1.6 Provisions for cooling aggregate and water shall be provided for during hot weather concreting.

16.1.7 Provisions for heating aggregate and water shall be provided for cold weather concreting.

17.0 ACCEPTANCE CRITERIA

17.1 The acceptability of concrete will be based upon the criteria specified in Subsection 7.0 of this Specification.

17.2 The mix design and laboratory test results from an Independent Testing Agency, for the concrete furnished, are required prior to acceptance of this Specification's work.

17.3 The Owner shall have authority to reject all materials and work not conforming to this Specification. Any defective material or work found shall be promptly replaced or corrected by the Vendor to the satisfaction of the Owner.

17.4 If the Owner, through oversight or otherwise, has accepted material or work which is defective or contrary to this Specification, the material or work, no matter in what stage of completion, may be rejected by the Owner.

17.5 Acceptance tests shall be performed on the materials of Section 9.0 of this Specification. These tests may be waived provided that the Vendor submits copies of the Manufacturer's Certified Material Test Reports.

TECHNICAL SPECIFICATION S-1B

FOR

CONCRETE WORK

LAKHRA POWER FEASIBILITY STUDY

LPS/B2633/D2

SPECIFICATION S-1B

FOR

CONCRETE WORK

TABLE OF CONTENTS

		Page
1.0	DESCRIPTION OF WORK	1
2.0	WORK INCLUDED	1
3.0	WORK NOT INCLUDED	2
4.0	APPLICABLE CODES, STANDARDS AND REGULATORY REQUIREMENTS	2
5.0	SUPPLEMENTAL DATA (NONE)	5
6.0	VENDOR DATA (NONE)	5
7.0	DESIGN REQUIREMENTS (NONE)	5
8.0	PERFORMANCE REQUIREMENTS (NONE)	5
9.0	MATERIAL REQUIREMENTS	5
10.0	FABRICATION AND ASSEMBLY REQUIREMENTS (NONE)	6
11.0	INSTALLATION REQUIREMENTS	6
12.0	PERSONNEL REQUIREMENTS (NONE)	18
13.0	INSPECTIONS AND TESTS	18
14.0	CLEANING, CORROSION PROTECTION AND COATING (NONE)	19
15.0	MARKING AND IDENTIFICATION	20
16.0	PACKAGINC, SHIPPING AND STORAGE	20
17.0	ACCEPTANCE CRITERIA	20

SPECIFICATION S-1B
FOR
CONCRETE WORK

1.0 DESCRIPTION OF WORK

The Contractor shall furnish all labor, supervision, tools, construction equipment, transportation and materials as specified by the Owner, and do all work necessary for receiving, handling, placing and curing of concrete for the power plant as described in this Specification.

2.0 WORK INCLUDED

2.1 Services to be supplied include, but are not limited to:

a. Removal of water from excavations

b. Installation of a mud mat

c. Construction of forms

d. Receive, store, handle and place reinforcing steel

e. Build construction joints, keyways, and expansion joints

f. Unload, store and install all water stops

g. Unload, store, handle and install or erect all embedded items

2.2 ITEMS TO BE FURNISHED

Items to be furnished include, but are not limited to:

a. Tools, equipment, labor and all incidentals required for completing the services required by this Specification

b. Form materials including bracing, shoring, spreaders, ties and form release agents required for the project

c. Tie wires, reinforcing chairs, etc., required for placing reinforcing steel

d. Grout and water stop materials

e. Curing compounds and surface hardeners required for the project

122

2.3 The Contractor shall plan and provide adequately for both usual and unusual conditions such as severe precipitation, high winds, etc., so as to complete the concrete work under the general direction of the Owner's Superintendent as indicated on the Contractor's Drawings and this Specification.

3.0 WORK NOT INCLUDED

3.1 Work items not covered by this Specification are as follows:

a. Supply of Concrete

b. Testing of Concrete

c. Supply of Reinforcing Steel

4.0 APPLICABLE CODES, STANDARDS AND REGULATORY REQUIREMENTS

All materials, fabrication, examination, testing, inspection, certification and documentation shall conform to the applicable portions of the following Specifications.

4.1 INDUSTRIAL CODES AND STANDARDS

4.1.1 American Concrete Institute (ACI)

ACI 305R	Hot Weather Concreting
ACI 306R	Cold Weather Concreting
ACI 211.1	Recommended Practice for Selecting Proportions for Normal and Heavyweight Concrete
ACI 214	Recommended Practice for Evaluation of Strength Test Results of Concrete
ACI 301	Specifications for Structural Concrete for Buildings
ACI 304	Recommended Practice for Measuring, Mixing, Transporting and Placing Concrete
ACI 311	Recommended Practice for Concrete Inspection
ACI 315	Manual of Standard Practice for Detailing Reinforced Concrete Structures

	ACI 318	Building Code Requirements for Reinforced Concrete
	ACI 347	Recommended Practice for Concrete Formwork

4.1.2 American Welding Society

AWS D1.4	Structural Welding Code Reinforcing Steel

4.2 AMERICAN SOCIETY FOR TESTING AND MATERIALS

ASTM A82	Standard Specification for Cold-Drawn Steel Wire for Concrete Reinforcement
ASTM A184	Standard Specification for Fabricated Steel Bar or Rod Mats for Concrete Reinforcement
ASTM A185	Standard Specification for Welded Steel Wire Fabric for Concrete Reinforcement
ASTM A615	Standard Specification for Deformed Billet-Steel Bars for Concrete Reinforcement
ASTM C29	Standard Method of Test for Unit Weight of Aggregate
ASTM C31	Standard Method of Making and Curing Concrete Compression and Flexure Strength Test Specimens in the Field
ASTM C33	Standard Specification for Concrete Aggregates
ASTM C39	Standard Method of Test for Compressive Strength of Molded Concrete Cylinders
ASTM C42	Standard Method of Obtaining and Testing Drilled Cores and Sawed Beams of Concrete
ASTM C78	Standard Method of Test for Flexural Strength of Concrete (Using Simple Beam with Third-Point Loading)
ASTM C94	Standard Specifications for Ready-Mixed Concrete
ASTM C138	Standard Method of Test for Weight Per Cubic Foot, Yield and Air Content (Gravimetric) of Concrete

ASTM C143	Standard Method of Test for Slump of Portland Cement Concrete
ASTM C150	Standard Specification for Portland Cement
ASTM C192	Standard Method of Making and Curing Concrete Test Specimens in the Laboratory
ASTM C231	Test for Air Content of Freshly Mixed Concrete by the Pressure Method
ASTM C233	Testing Air Entraining Admixtures for Concrete
ASTM C618	Specification for Fly Ash and Raw or Calcined Natural Pozzolans for Use in Portland Cement Concrete

4.3 FEDERAL CODES AND STANDARDS

Code of Federal Regulations (CFR) - Title 29 CFR, Part 1910, "Occupational Safety and Health Standards".

4.4 AMERICAN ASSOCIATION OF STATE HIGHWAY OFFICIALS

AASHTO M 182-60 - Burlap Cloth made from Jute or Kenaf.

4.5 GOVERNING SPECIFICATIONS

4.5.1 The aforementioned regulations and specifications shall govern except where provisions of this Specification conflict, in which event this Specification shall govern.

4.5.2 The Contractor shall bring all conflicts between the aforementioned regulations and this Specification to the attention of the Owner's Superintendent.

4.6 AVAILABILITY OF STANDARDS AND SPECIFICATIONS

4.6.1 These reference standards and specifications are available from American Concrete Institute, P.O. Box 19150 Detroit, Michigan; from American Society for Testing and Materials, 1916 Race Street, Philadelphia, Pennsylvania and from The American Welding Society, 2501 N.W. 7th Street, Miami, Florida 33125.

4.6.2 The Contractor having reference to these documents shall maintain copies of same on the jobsite at all times.

4.7 APPLICABLE ISSUE DATE

Application of codes and standards referenced herein requires the application of the latest issue date and of all addenda adopted as of the date of the purchase order. Later revisions may be invoked only by mutual agreement between Purchaser and Vendor.

5.0 SUPPLEMENTAL DATA

None

6.0 VENDOR DATA

Not Applicable

7.0 DESIGN REQUIREMENTS

Not Applicable

8.0 PERFORMANCE REQUIREMENTS

Not Applicable

9.0 MATERIAL REQUIREMENTS

9.1 CONCRETE

9.1.1 All concrete shall have a minimum 28 day compressive strength of 20,685 kPa (3,000 psi) unless otherwise approved by the Owner's Engineer.

9.1.2 All concrete shall consist of cement conforming to ASTM Specification C-150-78a, Type I or Type II and shall be air entrained unless otherwise approved by the Owner's Engineer.

9.2 GROUT

9.2.1 All grout shall be placed by the Contractor in accordance with the manufacturer's recommended procedures. All fluid grout is to be nonstaining, nonshrink and containing no iron fillings.

9.2.2 All grout will be fluid grout unless otherwise approved by the Owner's Engineer.

9.3 FORMS

9.3.1 Exterior wall forms shall be either wood or metal and shall conform to the shape, lines and dimensions of the concrete as called for on the Contractor's Drawings.

9.3.2 At all unexposed surfaces, undressed lumber may be used.

9.4 REINFORCING STEEL

9.4.1 The reinforcing steel shall be billet steel, intermediate grade deformed bars and shall meet Specification ASTM Designations A615, Grade 60, unless otherwise approved by the Owner's Engineer.

9.4.2 Welded wire fabric and mesh reinforcement shall meet Specifications ASTM A82 and ASTM A185.

9.4.3 Fabricated steel bar or rod mats for concrete reinforcement shall meet Specification ASTM Designation A184.

9.5 EMBEDDED ITEMS

Sleeves, pipes or conduits of aluminum shall not be embedded in structural concrete unless effectively coated or covered with bitumastic to prevent aluminum-concrete reaction or electrolytic action between aluminum and the reinforcing steel.

10.0 FABRICATION AND ASSEMBLY REQUIREMENTS

NONE

11.0 INSTALLATION REQUIREMENTS

11.1 FORMS

11.1.1 Form Placement

11.1.1.1 When forms are re-used, the surfaces to be in contact with concrete must be thoroughly cleaned and defects repaired before re-using.

11.1.1.2 Forms shall be substantial and sufficiently tight to prevent leakage of concrete and formation of fins.

11.1.1.3 Forms shall be properly braced or tied together so as to maintain their position and shape. If adequate foundation for shores cannot be secured, trussed supports shall be provided.

127

11.1.1.4 Forms shall be sufficiently strong to securely carry all construction loads without permanent deformation or deflection.

11.1.1.5 Forms shall be set to line and grade and so constructed and fastened as to produce true lines. Special care shall be taken to prevent bulging and to ensure that all surfaces be plumb and true.

11.1.1.6 Forms shall be so constructed as to facilitate the screeding and striking-off of exposed surfaces to accurate elevations.

11.1.1.7 Temporary openings shall be provided at the base of wall forms and at other points where necessary to facilitate cleaning and inspection.

11.1.1.8 All foreign matter shall be completely removed before any concrete is placed.

11.1.1.9 The inside of forms shall be coated with nonstaining mineral oil or other approved material. The oil shall be applied before reinforcement is placed.

11.1.1.10 All inserts, pipe sleeves, frames, etc., as may be required and all recesses as may be required or directed, shall be built into the construction.

11.1.1.11 Permanent Metal forms may be used in constructing the roofs and concrete floors only where shown and indicated on the Contractor's Drawings. These forms shall be capable of withstanding all construction loads.

11.1.1.12 All forms shall be constructed within the suggested tolerances of ACI 347, "Recommended Practice for Concrete Formwork" unless otherwise approved by the Owner's Engineer.

11.1.1.13 All forms shall be inspected and approved by the Owner's Superintendent before depositing of concrete.

11.1.2 <u>Form Removal</u>

11.1.2.1 Forms shall not be disturbed until the concrete has adequately hardened.

11.1.2.2 Shoring shall not be removed until the member has acquired sufficient strength to safely support its weight together with any other loads superimposed upon it.

11.1.2.3 Allowable construction loads for concrete with forms removed shall be based on cylinder test result strengths as a minimum.

11.2.3.4 Members subject to additional loads during construction shall be adequately shored to support both the member and construction loads in such a manner as will protect the member from damage by the loads.

11.1.2.5 Shoring under girders, beams and slabs shall have wedges under them to facilitate their adjustment and removal.

11.1.2.6 If fins and bulges repeatedly occur after such has on three (3) occasions been called to the Contractor's attention it will be considered an error in forming and they shall be removed and ground down at the Contractor's expense.

11.1.2.7 Wall clamps or tie rods shall be so made that when forms are removed no metal shall be within 25 mm (1") of any surface.

11.1.2.8 All openings in the surface due to formwork shall be promptly and completely filled with mortar.

11.1.2.9 All honeycombed openings and voids in concrete shall be repaired at the direction and discretion of the Owner's Engineer.

11.1.2.10 No wire ties shall be used except with express permission of the Owner's Superintendent.

11.2 REINFORCING STEEL

11.2.1 Bar Bending

All bends shall be made cold, around a pin having a minimum diameter equal to that specified in ACI 318.

11.2.2 Placing

11.2.2.1 Reinforcing shall be clean, free of all loose rust, scale, oil and other coatings which would impair or reduce its bond, before the reinforcing is placed in the forms, and shall be in such condition immediately before placing of concrete.

11.2.2.2 Reinforcing shall be accurately and securely placed to dimensions and spacing shown on the Contractor's Drawings.

11.2.2.3 Blocking used to hold the reinforcing steel up from the subgrade or formwork shall be structurally adequate, and shall prevent seepage of water to the reinforcing. Steel chairs or concrete blocks are acceptable.

11.2.2.4 Reinforcing steel shall be securely held in proper place to resist all applied construction loads. Interpretation of construction loads shall include, among other things, men walking on the reinforcing steel and the dumping of concrete through and on the reinforcing steel.

11.2.2.5 Where splices are shown or permitted they shall provide sufficient lap to adequately transmit the stress between bars in accordance with ACI 318.

11.2.2.6 Cadwelds as indicated on the Contractor's Drawings shall be used in accordance with ACI 318, and placed in accordance with the manufacturer's recommended procedures.

11.3 PLACING CONCRETE

11.3.1 General

11.3.1.1 Before beginning a run of concrete, hardened concrete and foreign materials shall be removed from the inner surfaces of the mixing and conveying equipment.

11.3.1.2 Before depositing concrete, all debris shall be removed from the space to be occupied by the concrete.

11.3.1.3 Retempered concrete shall not be used in this work, except under the direct supervision and approval of the Owner's Superintendent.

11.3.2 Removal of Water

11.3.2.1 Water shall be removed from excavations by the Contractor before concrete is deposited. No concrete shall be placed in any space containing water.

11.3.2.2 Underwater placement of concrete shall be prohibited except by written approval of the Owner's Engineer.

11.3.3 Preparation Before Concreting

11.3.3.1 Before any concrete is placed, all mud shall be completely removed and the temperature of all surfaces the concrete will contact shall be raised above the freezing point.

11.3.3.2 Concrete shall not be placed on frozen subgrade or on a surface that contains frozen materials.

120

11.3.3.3 The surface of concrete which has set and against which new concrete is to be poured shall be thoroughly cleaned to remove all foreign materials and laitance and saturated with water unless otherwise approved by the Owner's Engineer.

11.3.4 Dry Pack Grout

11.3.4.1 Dry pack grout shall be used only when approved by the Owner's Engineer.

11.3.4.2 Dry pack grout shall consist of one part cement to 2-1/2 parts of sand with just enough water to produce a mortar that will stick together while being molded into a ball by a slight pressure of the hands.

11.3.4.3 The dry pack grout shall be placed in small increments at a time and well rodded and packed beneath the plate using approximately a 25 mm (1") diameter rod for compacting.

11.3.5 Fluid Grout

11.3.5.1 Fluid grout shall be used in all locations where grout is called for unless otherwise approved by the Owner's Engineer.

11.3.5.2 Types of additives for fluid grouts shall be approved by the Owner's Superintendent.

11.3.5.3 Placement shall be in accordance with the manufacturer's recommended procedures.

11.3.6 Mud Mat

The installation of a mud mat, to provide suitable conditions to install the base slabs, shall be approved by the Owner's Superintendent. The concrete placed shall be in addition to the designed thickness of the concrete.

11.3.7 Handling

11.3.7.1 Concrete shall be handled from the mixer to the place of final deposit as rapidly as practicable by methods which prevent the separation or loss of ingredients.

11.3.7.2 It shall be deposited in the forms as nearly as practicable in its final position to avoid rehandling.

11.3.7.3 It shall be so deposited as to maintain, until the completion of the unit, a plastic surface approximately horizontal.

11.3.7.4 Concrete may be dropped into forms vertically for a distance of not more than 10 m (30 feet) through a tight tube, the bottom of the tube to be not more than 1 m (3 feet) above the plastic surface. This section does not apply to cast-in-place or pipe piles.

11.3.7.5 Forms for walls or other thin sections of considerable height shall be provided with openings or other devices that will permit the concrete to be placed in a manner that will avoid accumulations of hardened concrete on the forms or metal reinforcement and prevent segregation. Under no circumstances shall concrete that has partially hardened be deposited in the work.

11.3.7.6 In high walls and columns, care shall be exercised to minimize shrinkage.

11.3.7.7 Easier workability of concrete secured by means of excess water shall be done only with the expressed permission of the Owner's Superintendent.

11.3.8 Depositing Continuously

If for any reason the concreting is stopped, the greatest care shall be taken to stop the work at such a point that the joints formed will not weaken the member structurally. Such construction joints shall be made only on approval of the Owner's Engineer and shall be true, straight joints.

11.3.9 Chuting

11.3.9.1 Concreting shall not be conveyed by chuting except where other methods would be impracticable and then only with the expressed permission of the Owner's Superintendent.

11.3.9.2 In case chuting is permitted, the plant shall be of such size and design as to ensure a practically continuous flow in the chute.

11.3.9.3 The angle of the chute with the horizontal shall be such as to allow the concrete to flow without separation of the ingredients.

11.3.9.4 The delivery end of the chute shall be as close as possible to the point of deposit, but not more than 1 meter (3 feet) above plastic surface.

11.3.9.5 When the operation is intermittent, the spout shall discharge into a hopper. The chute shall be thoroughly flushed with water before and after each run. The water used for this purpose shall be discharged outside the forms.

11.3.10 Consolidation

11.3.10.1 Concrete, during and immediately after depositing, shall be thoroughly consolidated to maximum subsidence, without segregation, using approved mechanical vibrators.

11.3.10.2 All areas shall be vibrated uniformly.

11.3.10.3 Vibrators shall be inserted vertically at close enough intervals so that the zones of influence overlap.

11.3.10.4 Vibration shall not be continued in any one spot to the extent that pools of grout are formed.

11.3.10.5 The vibrator shall be inserted to the full depth of the layer being treated. When concrete is being placed in layers, the tip of the vibrator shall extend approximately 100 mm (4") into the underlying layer.

11.3.10.6 Vibrators shall not be used to move concrete horizontally.

11.3.10.7 A sufficient number of vibrators shall be employed to insure uniform consolidation throughout the entire mass.

11.3.10.8 Operators of vibrators shall be experienced and competent.

11.3.10.9 The Contractor shall provide ample standby vibrators and repair parts and shall provide systematic maintenance.

11.3.10.10 Frequency of vibrators to consolidate mass concrete shall not be less than 6000 rpm when immersed in the concrete for vibrating heads larger than 100 mm (4") diameter. The minimum frequency of vibrators with heads 100 mm (4") or less in diameter shall be 7000 rpm.

11.3.10.11 For thin walls or inaccessible portions of the forms, the concrete shall be assisted into place by tapping or vibrating the forms opposite the freshly placed concrete.

11.3.10.12 Concrete shall be thoroughly worked around the reinforcement and around embedded fixtures and conduits and into the corners of the forms. Special care shall be taken to rod along concrete surfaces which are to be exposed.

11.3.11 Construction Joints

11.3.11.1 Construction joints and keyways shall be built and located as shown on the Contractor's Drawings.

11.3.11.2 If for any reason additional joints are required, the proposed change shall only be made with the approval of the Owner after consultation with the Owner's Engineer.

11.3.12 Expansion Joints

11.3.12.1 Expansion joints where required, shall be so made that the necessary movement may occur with minimum resistance at the joint.

11.3.12.2 Reinforcement shall not extend across expansion joints and the breaker between the two sections shall be complete except for the water stop when used.

11.3.12.3 Exposed edges at expansion joints shall be rounded or beveled and the joint filled with elastic joint filler of approved quality.

11.3.13 Installation of Water Stop

11.3.13.1 All splices except simple butted types shall be shop fabricated.

11.3.13.2 The Contractor shall perform only butt type splices in the field and shall submit a copy of the splicing procedure to the Owner's Superintendent for approval prior to performing any of the work.

11.3.13.3 Splices shall have a tensile strength of not less than 60 percent of the unspliced material.

11.3.13.4 Special care shall be exercised to vibrate concrete thoroughly around all water stops.

11.3.13.5 The Contractor shall tie the outside edge of the water stop at not less than 1.25 m (4'-0") centers to either the reinforcing steel or the formwork so that it is not displaced while placing concrete.

11.3.13.6 Immediately before pouring adjoining concrete the protruding portion of the water stop shall be cleaned of all foreign material and placed in its correct position and the surface of the existing concrete shall be prepared in accordance with Article 11.3.3.3.

11.3.13.7 Contractor shall straighten and make any necessary repairs the existing water stop.

11.3.13.8 Connections to existing water stop shall be made in accordance with this Specification.

11.3.13.9 The Contractor shall apply joint water-proofing in accordance with the recommendations of the manufacturer.

11.3.14 Cold Weather Handling

The Contractor shall follow the recommendations and handle concrete in cold weather in accordance with ACI 306R-78.

11.3.15 Hot Weather Handling

11.3.15.1 The Contractor shall follow the recommendations and handle concrete in hot weather in accordance with ACI 305R-77.

11.3.15.2 The curing practices specified in Article 11.4 shall be rigidly adhered to.

11.4 CURING

11.4.1 General

Immediately after concrete has hardened sufficiently to prevent marring or water damage, the surfaces shall be cured by being kept continuously wet (moist curing) for a minimum period of 7 days (unless specified otherwise) or by the application of approved membrane curing compound.

11.4.2 Moist Curing

11.4.2.1 Exposed surfaces of concrete shall be covered with two thicknesses of an approved woven fabric, and approved quilted fiber blanket or other highly absorptive material capable of preventing the evaporation of mixing water. (AASHTO Designation M 182).

11.4.2.2 Such covering shall be thoroughly wet when applied and shall be kept saturated by spraying with water until the end of the cure period.

11.4.2.3 Wood wall forms may be left in place and considered as an adequate moisture retainer provided the tops of the forms are kept saturated so that water will run down between the forms and the concrete.

11.4.2.4 Steel wall forms will not be considered as providing an adequate moisture barrier during the curing process. They shall be removed after 24 hours except in such areas where required to support concrete subject to dead load flexural stresses.

11.4.2.5 Permanent metal forms may be considered as providing an adequate moisture barrier during the curing process if such forms are tight and curing is performed in accordance with the applicable sections of this Specification.

11.4.2.6 Large surface areas such as base slabs and floors may be diked and flooded for the minimum curing period if so desired.

11.4.3 Membrane Curing

11.4.3.1 Membrane curing compounds, where used, shall be applied in accordance with manufacturer's recommendations.

11.4.3.2 The formed surfaces of the concrete shall be thoroughly wetted by sprinkling with water immediately after stripping forms. Surface defects and tie rod holes shall be filled prior to the application of the membrane curing compound. There shall be no free water on the surface when the compound is applied.

11.4.3.3 The application of curing compounds to floor slabs shall be performed immediately after the floor surface has hardened sufficiently so that it will not be marred by the application. If the surface has dried out prior to application, it shall be saturated with water before applying the curing compound, but there shall be no free water on the surface at the time of application.

11.4.3.4 The application shall be made with spraying equipment capable of applying a smooth even textured coat.

11.4.3.5 If transparent compounds are used they shall contain a dye which soon fades out to assure adequate coverage.

11.4.3.6 Spraying equipment shall be of the pressure tank type with provision for continual agitation of the content during application. Compressed air lines shall be trapped to prevent moisture or oil from getting into the compound.

11.4.3.7 No curing compound shall be used without prior approval of the Owner's Superintendent.

11.4.3.8 The curing compound shall be of a composition that will remain intact as a sealing coat for 28 days after its application.

11.4.3.9 Whenever the curing membrane will be subject to damage from traffic or other cause, it shall be protected, after drying for 24 hours, by a layer of sand or earth not less than 25 mm (1") in thickness, or by other suitable and effective means.

11.4.3.10 Any damage to the membrane within the curing period shall be repaired without delay by a liberal application of curing compound.

11.4.3.11 No membrane curing compounds shall be used on the surfaces of construction joints.

11.4.4 Transition Period

11.4.4.1 Care should be taken either at the end of the curing period or upon removal of the forms to avoid sudden exposure to a temperature greatly different than that at which the concrete was cured. Particular attention should be given this matter in cold weather.

11.4.4.2 Exposure should be made in such manner as to allow time for the whole mass of concrete to approach gradually the temperature to which it is to be subjected immediately following the curing period.

11.4.4.3 In no case should the temperature change at the surface of the concrete be greater than 3°C (5°F) in any hour or be greater than 20°C (40°F) in 24 hours.

11.5 WALL FINISH

11.5.1 General

11.5.1.1 Smooth, solid concrete surfaces are required throughout the work.

11.5.1.2 Only those exposed concrete surfaces specifically designated on the Contractor's Drawings shall be rub finish or machine finished.

11.5.2 Initial Treatment

11.5.2.1 The surfaces to be rub or machine finished shall receive initial treatment as soon as the forms are removed.

11.5.2.2 In general, this will be not less than eight days after the placing of the concrete in that section.

11.5.2.3 All holes, pits or imperfections in the surface shall first be thoroughly wetted, scrubbed with a wire brush and compactly filled with mortar.

11.5.2.4 The entire surface shall then be thoroughly wetted down and kept wet while the finishing process is going on.

11.5.3 Final Treatment

11.5.3.1 For rub finish, rubbing shall be done by hand with a No. 20 carborundum stone and shall be continued until all hollows, line markings and surplus materials have been removed and a uniform surface has been attained.

11.5.3.2 Machine finishing shall be done with an approved machine and shall be continued until all line markings and surplus materials have been removed and a uniform surface has been attained.

11.5.3.3 Walls to be sack rubbed shall be thoroughly filled by rubbing a thick slurry of cement and water into the wall using a burlap rag. The slurry must be rubbed into the surface and care must be taken that no film is left on the surface.

11.6 FLOOR FINISH

11.6.1 Monolithic Finish

11.6.1.1 Where a separate or two coat finish is not specified on the Contractor's Drawings for floors, the floor shall be cast monolithically with the finish of the same mix as the rest of the slab.

11.6.1.2 Concrete shall be placed between screeds and struck off to the proper slope. Care should be exercised that no pockets or hollows form at the surface of the slab.

11.6.1.3 All concrete floors and finish, where so indicated on the Contractor's Drawings, shall slope evenly to floor drains.

11.6.1.4 The finish shall be floated into the slab by means of power floats followed by steel troweling as soon as the concrete has hardened sufficiently to prevent excess lines from working to the surface.

11.6.1.5 Following the first troweling, the floor shall be allowed to stand until it has set sufficiently to finish hard and smooth, and it shall receive a second steel troweling. The troweling shall remove all evidence of kneeboard impressions, trowel marks or other irregularities.

11.6.1.6 Floor surfaces that do not show a good smooth finish shall be ground to a true surface by the Contractor if directed by the Owner's Engineer. This work shall be performed at the Contractor's expense.

11.6.1.7 Particular care shall be exercised by the Contractor to ensure that the surfaces of concrete floors on either side of construction joints and especially at joints between existing and new floors are flush and level. Where concrete floors are to be covered, the Contractor shall provide a surface which will be suitable to receive the proposed covering and shall be subject to approval of the Owner's Engineer.

11.6.2 Curing

11.6.2.1 When the floor has hardened sufficiently so that it cannot be easily scratched, it shall be completely covered with sand, burlap or other approved material and kept continuously damp for a minimum of seven days as specified by Article 9.4 of this Specification.

11.6.3 Surface Hardener

11.6.3.1 Where noted on the Contractor's Drawings concrete floors shall be surfaced hardened using Master Builders Sani-Seal as manufactured by Master Builders or an equal as approved by the Owner's Superintendent. This finish shall be installed in strict accordance with the manufacturer's recommendation.

11.6.3.2 The Contractor shall make use of the manufacturer's field service in applying this floor finish.

12.0 PERSONNEL REQUIREMENTS

Not Applicable

13.0 INSPECTIONS AND TESTS

13.1 GENERAL

13.1.1 The Owner reserves the right to inspect the materials used and the workmanship.

13.1.2 The Contractor shall cooperate with the Owner's Engineer and shall permit him access to all parts of the work.

13.1.3 When requested the Contractor shall notify the Owner when the various parts are ready for inspection.

13.1.4 The Owner's Engineer will satisfy himself that all requirements of this Specification and reference specifications are met.

13.2 AUTHORITY TO REJECT

The Owner's Engineer will have authority to reject all materials furnished by the Contractor and workmanship not conforming to the Contractor's Drawings and this Specification any time defects are found during the progress of the work, and the Contractor shall promptly replace or repair same at the direction of the Owner at no increased cost to the Owner.

13.3 LIABILITY FOR DEFECTIVE MATERIAL

If the Owner's Engineer, through oversight or otherwise, has accepted material or work which is defective or contrary to this Specification or the Contractor's Drawings, this material, no matter in what stage of completion, may be rejected by the Owner.

13.4 INSPECTION OF CONCRETE

13.4.1 Testing of concrete will be performed in accordance with the specifications referred to in Article 5 of this Specification.

13.4.2 Testing will be in accordance with ASTM Specification C-29. The Contractor shall assist in making test specimens as requested.

13.4.3 If the slump of a batch of concrete does not meet the specified design slump, the Owner's Engineer may order that batch of concrete to be rejected at the cost of the Contractor.

13.4.4 Concrete cylinders to be used in compression tests shall be made and cured in accordance with ASTM Specification C-31.

13.4.5 Not less than four specimens shall be made for each test and not less than one test for each 100 cu. meters or major portion thereof of concrete for each class of work.

13.4.6 At least one set of test specimens for each day concrete is poured shall be made regardless of the amount of concrete poured that particular day.

13.4.7 Additional specimens may be required for testing when the temperature falls below 4.4°C (40°F). In such case, the cylinders shall be made at the request of the Owner's Engineer.

14.0 CLEANING, CORROSION PROTECTION AND COATING

Not Applicable

15.0 MARKING AND IDENTIFICATION

Not Applicable

16.0 PACKAGING, SHIPPING AND STORAGE

Not Applicable

17.0 ACCEPTANCE CRITERIA

17.1 The average strength of all cylinders shall be equal to or greater than the strength specified, and at least 90 percent of all the tests shall indicate a strength equal to or greater than the strength specified.

17.2 If the strength of the laboratory control cylinders for any portion of the structure falls below the compressive strength as specified, the Owner's Engineer shall have the right to order the Contractor to change the proportions of the water content for the remaining portion of the structure.

17.3 If the strength of the field cured cylinders falls below the required strength, the Owner's Engineer shall have the right to require conditions of temperatures and moisture necessary to secure the required strength and may require tests in accordance with the "Method of Obtaining and Testing Drilled Cores and Sawed Beams of Concrete" (ASTM C-42), or order load tests (ACI 318) to be made on portions of the structure so affected.

17.4 If any independent certified laboratory attests that the concrete as delivered was solely responsible for the failure of the concrete to reach strength the Owner's Engineer may order such concrete removed and replaced at the expense of the Contractor.

17.5 Where laboratory and/or field cured cylinders meet the strength requirements of this Specification but tests on in-place concrete fail to meet strength requirements, the Owner's Engineer may order such concrete removed and replaced at the expense of the Contractor, provided strength is below minimum acceptable requirements due to negligence or lack of care by the Contractor.

LAKHRA POWER FEASIBILITY STUDY

SPECIFICATION S-2

STRUCTURAL STEEL

SPECIFICATION S-2
STRUCTURAL STEEL

TABLE OF CONTENTS

		Page
1.0	DESCRIPTION OF WORK	1
2.0	WORK INCLUDED	1
3.0	WORK NOT INCLUDED	1
4.0	APPLICABLE CODES, STANDARDS AND REGULATORY REQUIREMENTS	1
5.0	SUPPLEMENTAL DATA	3
6.0	VENDOR DATA	4
7.0	DESIGN REQUIREMENTS	5
8.0	PERFORMANCE REQUIREMENTS (None)	6
9.0	MATERIAL REQUIREMENTS	6
10.0	FABRICATION AND ASSEMBLY REQUIREMENTS	7
11.0	INSTALLATION REQUIREMENTS (None)	9
12.0	PERSONNEL REQUIREMENTS	9
13.0	INSPECTIONS AND TESTS	9
14.0	CLEANING, CORROSION PROTECTION AND COATING	11
15.0	MARKING AND IDENTIFICATION	11
16.0	PACKAGING, SHIPPING AND STORAGE	12
17.0	ACCEPTANCE CRITERIA	12
ATTACHMENT		
	Structural Steel Pricing Schedule	13

LAKHRA POWER FEASIBILITY STUDY
TECHNICAL SPECIFICATION S-2
STRUCTURAL STEEL

1.0 DESCRIPTION OF WORK

The scope of services to be performed consists of supplying all material, labor, equipment, supervision, transportation and tools necessary to detail, fabricate and deliver the structural steel, metal form deck, handrail, stairs, ladders, toe plates and grating to the jobsite as described in this Specification.

2.0 WORK INCLUDED

2.1 The Work shall include, but not be limited to, the following items:

2.1.1 Detailing, fabrication and delivery of all structural steel including support members, toe plates, bracing, girts, connection attachments with all bolts, nuts and washers.

2.1.2 Detailing, fabrication and delivery of all metal form deck for concrete floors.

2.1.3 Detailing, fabrication and delivery of all ladder and stair framing including handrails and connection attachments.

2.1.4 Detailing, fabrication and delivery of all floor grating and floor plate including connection attachments.

2.1.5 Prepare surfaces, furnish and apply shop primer paint.

2.1.6 Detailing, fabrication and delivery of all column foundation anchor bolts.

3.0 WORK NOT INCLUDED

Structural Steel Erection is not covered by this Specification.

4.0 APPLICABLE CODES, STANDARDS AND REGULATORY REQUIREMENTS

4.1 All work specified herein and covered by this Specification shall comply with all applicable codes and standards including, but not necessarily limited to the following:

4.1.1 American Society for Testing Materials (ASTM)

ASTM-A36 - Standard Specification for Structural Steel

ASTM-A123 - Standard Specification for Zinc (Hot-Galvanized) Coating on Products Fabricated from Rolled, Pressed and Forged Steel Shapes, Plates, Bars and Strip

ASTM-A53 - Standard Specification for Pipe, Steel, Black and Hot-Dipped, Zinc-Coated Welded and Seamless

ASTM-A153 - Standard Specification for Zinc Coating (Hot-Dip) on Iron and Steel Hardware

ASTM-A325 - -High Strength Bolts for Structural Steel Joints

ASTM-A501 - Hot Formed Welded and Seamless Carbon Steel Structural Steel Tubing

ASTM-A525 - Specification for General Requirements for Steel Sheet, Zinc Coated (Galvanized) by the Hot Dip Process

ASTM-A611 - Specification for Steel, Cold Rolled Sheet, Carbon, Structural

ASTM-A283 - Specification for Low and Intermediate Tensile Strength Carbon Steel Plates, Shapes and Bars

ASTM-A307 - Specification for Carbon Steel Externally Threaded Standard Fasteners

ASTM E707 - Practice for Magnetic Particle Examination

4.1.2 American Institute of Steel Construction (AISC)

Manual of Steel Construction, 8th Edition

Specification for the Design, Fabrication and Erection of Structural Steel for Buildings, as adopted November 1, 1978

Code of Standard Practice for Steel Buildings and Bridges, as adopted September 1, 1976

Specification for Structural Joints using ASTM A-325 or A490 Bolts, as adopted August 14, 1980

4.1.3 American Welding Society (AWS)

AWS D1.1 - Structural Welding Code

AWS A5.1 - Specification for Covered Carbon Steel Arc Welding Electrodes

AWS A5.5-81 - Specification for Low Alloy Steel Covered Arc Welding Electrode

145

4.1.4 Miscellaneous Codes and Standards

Code of Federal Regulations (CFR), Title 29 CFR, Part 1910, "Occupational Safety and Health Standards"

Steel Structures Painting Council, Volume No. 1, Good Painting Practice and Volume No. 2, Systems and Specifications

National Association of Architectural Metal Manufacturer's Metal Bar Grating Manual, latest edition

Steel Deck Institute Inc. - Design Manual for Composite Decks, Form Decks and Roof decks Publication No. 25, 1984

4.2 CONFLICTS

4.2.1 The aforementioned codes, regulations, and specifications shall govern except where such requirements are less conservative than the comparable requirements of this Specification, in which case, this Specification shall govern.

4.2.2 All conflicts shall be presented in writing to the Owner prior to beginning the work affected by the conflict.

4.3 REFERENCE TO STANDARDS

4.3.1 For convenience, reference is made in succeeding sections of this Specification to various specific portions of the codes, standards, and specifications and certain modifications and additions may be made.

4.3.2 Neither the specific references nor any modifications and additions are intended to de-emphasize any other portion of these codes, standards and specifications.

5.0 SUPPLEMENTAL DATA

5.1 DRAWINGS

The following drawings are provided to outline the basic structures, arrangement of members and scope of supply:

Drawing Title	Number
(Later)	(Later)

6.0 VENDOR DATA

6.1 The Vendor shall furnish steel detail shop drawings for approval prior to fabrication.

6.2 The Vendor shall furnish a schedule for fabrication and delivery of the subject materials.

6.3 The Vendor shall submit to the Owner copies of the following procedures within two weeks after contract award and prior to start of fabrication.

a. Welding procedures and procedure qualifications

b. Inspection and test procedures

c. Cleaning and painting procedures

6.3.1 Mill material certifications shall be submitted to the Owner.

6.3.2 An up-to-date index of all Vendor Drawings shall be submitted to the Engineer periodically.

6.3.3 Final "Certified Drawings" for records and distribution.

6.3.4 A monthly progress report indicating status of drawings, fabrication, and delivery shall be provided.

6.4 VENDOR SHOP DRAWINGS

6.4.1 The Vendor's shop drawings shall indicate profiles, sizes, spacing and locations of structural members, connections, attachments fasteners, camber and erection plans. Erection plans shall identify all field welds that are required.

6.4.2 Welding shall be identified using standard AWS welding symbols.

6.5 APPROVAL OF VENDOR'S DRAWINGS

6.5.1 Drawing Approval

Approval of the Vendor's Drawings by the Engineer constitutes approval as to size and assembly, general dimension, and external clearances only. This approval does not relieve the Vendor of the responsibility for accuracy of the detail dimensions as interpreted from the Engineering Drawings and field measurements. Approval also does not relieve the Vendor of responsibility for the structural integrity and/or serviceability of designs, materials, and equipment furnished to meet the service conditions as stated in these technical specifications.

6.5.2 Drawings for Approval

6.5.2.1 Two prints and one reproducible of all shop detail drawings, bills of material, erection drawings, and other Vendor drawings shall be sent prepaid to the Engineer for approval in accordance with the schedule as outlined.

6.5.2.2 The Vendor shall respond to the comments and within 2 weeks shall issue final drawings. Four prints and two reproducibles of all certified drawings are required for distribution.

6.5.2.3 All drawings for approval and certified drawings shall be shipped to the Owner.

7.0 DESIGN REQUIREMENTS

7.1 CONNECTION DESIGN

7.1.1 Welded and high strength bolted connections shall meet the requirements as set forth in the referenced specifications and as indicated in this Specification. Contrary to Section 4.2 of AISC Code of Standard Practices, the Vendor shall be responsible for the engineering design of all connections to safely resist stresses resulting from axial and shear loads and/or moments as noted on the Design Drawings. Where the Design Drawings do not indicate beam connection design loads, the beam end connections shall be designed for one half the total uniform load which the beam can support based on its span. The total uniform load shall be determined from the table of uniform load constants found in Part 2 of the AISC Manual of Steel Construction eight edition. Connection designs will be reviewed by the Engineer and, if found to be inadequate, they shall be redesigned by the Vendor, at his own expense until approved.

7.1.2 Shop assembled joints may be fabricated using either welded E70XX connections or 22mm (7/8) inch diameter A325F high strength steel bolted connections except where a specific type of joint is shown on the Design Drawings. ASTM A490 bolts may be used only where unusually large design forces result in large and unpractical connection details using A325 bolts. A490 bolts shall be used only with the approval of the Engineer.

7.1.3 Field assembled joints shall be fabricated using 22mm (7/8 inch) diameter ASTM A-325F steel bolts except where shown otherwise on the Design Drawings or where a field welded joint proves to be more practical.

7.2 SUBCONTRACTORS

The Vendor shall submit to the Owner the name of any Subcontractor he intends to use for the design and/or shop detailing work and the resumes of all key project personnel. The use of such Subcontractor's services shall be subject to Owner's approval.

8.0 PERFORMANCE REQUIREMENTS

None

9.0 MATERIAL REQUIREMENTS

9.1 All structural shapes and plates used shall be fabricated from new material meeting the requirments of ASTM-A36. Two copies of mill test results of all structural steel used for the work shall be submitted to the Owner.

9.2 Welding electrodes for general welding shall be made with E70XX electrodes. Welding electrodes for welds 12mm (1/2") and over shall be low hydrogen type conforming to AWS A-5.1 or 1-5.5, Grade E70XX, compatible with the type of steel being welded. Lower strength electrodes such as E60XX, shall only be used as directed on the Engineering Drawings.

9.3 Except as noted on the Design Drawings, all washers, nuts, and bolts for erection or connection shall conform to ASTM A325-Type 1 or 2. All bolts shall have hexagon heads and nuts.

9.4 All grating shall be standard welded grating with 25mm x 5mm (1" x 3/16") bearing bars on 30mm (1-3/16") centers with cross bars at 100mm (4") centers. Grating shall comply with the National Association of Architectural Metal Manufacturers Designation WD-19-4 and shall be hot-dipped galvanized in accordance with ASTM A123.

9.5 All stair treads shall be of welded construction with depth of bearing bars as required to safely resist design loads listed on the Design Drawings. All stair treads shall have an abrasive type nosing and be not less than 267mm (10-1/2") in width. Stair treads shall be hot-dipped galvanized in accordance with ASTM A123.

9.6 Steel pipe for handrail shall be furnished in accordance with the Specifications for Welded and Seamless Pipe, ASTM A53. Size shall be 38mm (1-1/2") standard pipe 48mm (1.9" O.D.) unless otherwise noted on the drawings.

9.7 Miscellaneous plates used for handrail connections shall be ASTM A-283, or A-36, unless otherwise specified.

9.8 Bolts and nuts for handrail shop and field connections shall conform to ASTM Specification A-307.

9.9 Metal form deck to be used for concrete floors shall be galvanized in accordance with ASTM A525 to a minimum G60. The deck shall be 38mm (1-1/2") nominal depth ASTM 611 grade E material having a minimum design thickness equal to .9mm (.0358) inches (20 ga).

10.0 FABRICATION AND ASSEMBLY REQUIREMENTS

10.1 STRUCTURAL STEEL FABRICATION

10.1.1 Structural steel shall be shop assembled to the largest practical sizes for shipping and erection.

10.1.2 Structural steel connections shall be in accordance with Sections 7.0 and 10.3 of this Specification.

10.1.3 All gusset plates for connections shall be minimum of 6mm (1/4") in thickness.

10.1.4 Fabrication tolerances shall be in accordance with the AISC "Manual of Steel Construction."

10.1.5 The Contractor shall provide 9mm (3/8") diameter drain holes, preferably in the web of members, in all locations where water may be trapped in the completed structure.

10.2 HANDRAIL AND GRATING FABRICATION

10.2.1 Bearing bars and cross bars in adjoining sections of grating shall line up unless shown otherwise on the Design Drawings. At all end joints, bearing bars shall be banded to prevent telescoping. Mechanical fasteners (minimum four per panel) shall be used to attach all grating to the structural steel.

10.2.2 All grating, handrail, stair, and toeplate details shall be in accordance with the standard structural detail drawings attached to this Specification.

10.2.3 Grating panels shall be detailed to provide panel joints with split toe plate rings at piping floor penetrations as shown on the Engineering drawings.

10.2.4 Handrail welds on top rail sections and mitered corners shall be ground smooth to eliminate any personnel hazard.

10.2.5 Handrails shall be fabricated in sections readily handable in the field.

10.3 CONNECTIONS

10.3.1. Welding Requirements

10.3.1.1 All shop welding and field welding preparations shall be performed in accordance with the requirements of AWS D1.1.

10.3.1.2 The Vendor shall provide adequate clip angles, splice plates, or similar devices at all field welded joints to allow the different pieces to be securely bolted together and properly aligned before any field welding is started.

10.3.1.3 Only welders qualified for this type of work in accordance with the American Welding Society's "Standard Qualification Procedure" shall be permitted to perform welding. Prior to the start of fabrication, the Vendor shall submit to the Owner a certificate stating the names of all welders to be used on the project and that they have passed the required qualification tests within the past 6 months.

10.3.1.4 The Vendor shall submit to the Owner for his review and comments the proposed welding procedures for all welding on this project.

10.3.1.5 Welding shall be visually inspected by the Vendor in accordance with Section 13.0 of this Specification.

10.3.2 Bolting Requirements

10.3.2.1 Only friction type connections conforming to the requirements of the Reference Codes and Standards will be permitted except where otherwise noted in this Specification, on the Design Drawings, or as approved by the Engineer.

10.3.2.2 The Vendor shall ensure that bolts and nuts having nicked or rusted threads or damaged in any other way are not used and that the bolts with specified nuts and washers are of the required diameter and length for the connection in which they are to be used.

10.3.2.3 Beveled washers shall be furnished for connections where required. Plain washers shall be furnished for all bolts to be placed in slotted holes.

10.3.2.4 Contact surfaces of bolted joints shall be smooth, flush, and free of all burrs, weld beads, or other projections.

10.3.2.5 The Vendor shall furnish direct tension indicators to be used with all high strength bolts.

10.3.2.6 Shop bolts shall not be forced into holes.

151

10.3.2.7 Holes that must be enlarged to admit shop bolts shall be reamed in the shop.

11.0 INSTALLATION REQUIREMENTS

None

12.0 PERSONNEL REQUIREMENTS

12.1 Welders shall be qualified as described in Section 10.3.1.3 of this specification.

12.2 All inspectors used for visual weld inspection shall be qualified to AWS QC-1. The Vendor's inspectors shall not be involved in production work while acting as an inspector.

12.3 All detailers used to produce shop drawings shall be experienced structural steel detailers.

12.4 Connection designs shall be done under the responsible supervision of a licensed professional Engineer.

13.0 INSPECTION AND TESTS

13.1 GENERAL

13.1.1 It shall be the Vendor's responsibility to provide in-process and final visual and dimensional inspection of the fabrication work.

13.1.2 The Vendor shall cooperate with the Owner and shall permit him access to all parts of the work at all times.

13.1.3 The Vendor shall notify the Owner 3 working days in advance of when the various parts are ready for inspection.

13.1.4 The Owner shall satisfy himself that all requirements of this Specification, including the reference specifications, are met.

13.1.5 Authority to Reject

The Owner shall have authority to reject all materials and workmanship not conforming to the Engineering Drawings and the Specification. Any defective material or workmanship found during the progress of the work shall be promptly replaced or corrected by the Vendor to the satisfaction of the Owner.

102

13.1.6 Liability for Defective Material or Workmanship

If the Owner, through oversight or otherwise, has accepted material or work which is defective or contrary to this Specification, Engineering Drawings, or the Vendor Drawings, this material or work, no matter in what stage of completion, may be rejected by the Owner.

13.2 WELDING INSPECTION AND TESTING

13.2.1 All shop welding shall be visually inspected by the Vendor.

13.2.2 All welding inspections and tests shall be performed by the Vendor in accordance with AWS D1.1, Section 6 to quality acceptance levels defined in AWS D1.1, Paragraph 8.15.

13.2.3 The cost of weld inspection is to be a part of the Vendor's expenses. If ASNT and/or AWS qualified inspectors are not employed by the Vendor or the Vendor's subcontractor, an independent testing laboratory shall be retained by the Vendor at the Vendor's expense. All inspectors used for visual weld inspection shall be qualified to AWS QC-1. The Vendor's inspectors shall not be involved in production work while acting as an inspector.

13.2.4 All defective welds shall be removed, repaired and reinspected in accordance with AWS D.1 by the Vendor prior to shipment.

13.4 QUALITY ASSURANCE

The Vendor shall have a quality assurance program in effect. As a minimum the Vendor shall maintain the following records for the Owner's review at the Vendor's facility.

13.4.1 Purchase Orders (unpriced)

13.4.2 NDE Personnel Qualifications

13.4.3 In-Process fabrication inspection records

13.4.4 Major defect repair records

13.4.5 Nonconformances, defined as non-compliances with Specifications and Drawings

13.4.6 Final inspection reports and releases

13.5 OWNER RECEIVING INSPECTIONS

13.5.1 The Owner's Site Construction Supervisor and/or the Construction Inspector will randomly inspect material received to

verify compliance with the applicable specifications, codes or standards. The inspector will work closely with the Vendor to assure compliance to project specifications. These inspections will be documented and retained in on-site files.

13.5.2 If the material is found to comply with the specification, the Inspector or the Construction Inspector will authorize release to construction. If warranted, the Owner's Project Manager or his designee, may perform inspection at the manufacturing facility.

13.5.3 Deficiencies noted during receiving inspection will be processed using nonconformance reports. The Owner reserves the right to reject nonconforming material in accordance with Paragraphs 13.1.5 and 13.1.6.

14.0 CLEANING, CORROSION PROTECTION AND COATING

14.1 PAINTING

14.1.1 The Vendor shall clean, prepare and shop prime the structural steel. Do not prime faying surfaces of friction type high strength bolted connections.

14.1.2 Painting and preparation shall be done in accordance with the Steel Structures Painting Council, Steel Structures Painting Manuals Volumes 1 and 2.

14.1.3 Surface preparation for shop primer shall be in accordance with SSPC-SP6 "Commercial Blast Cleaning."

14.1.4 Shop primer shall be one coat of Carbo Zinc II inorganic zinc primer as manufactured by Carboline Co. or Owner approved equal. Primer shall be applied in accordance with manufacturers recommendations to not less than a 3 mil dry film thickness.

14.1.5 The Vendor shall provide for the field touch up of all areas where shop primer has been damaged during the shipping process.

14.2 GALVANIZING TOUCH UP

The Vendor shall furnish a zinc material and touch up all galvanized steel surfaces wherever the coating has been damaged either physically or thermally as by welding during fabrication or shipment.

15.0 MARKING AND IDENTIFICATION

15.1 Mark the north face of all columns "North."

15.2 Beams and girders which are not symmetrical shall be marked to designate the top and north or east end.

15.3 Each piece mark shall include the number of the shop drawing on which the piece is detailed.

15.4 Members weighing more than tonnes (2 tons) shall have the weight marked thereon.

16.0 PACKAGING, SHIPPING AND STORAGE

16.1 All materials shall be shipped to (Later) - Attention: (Later).

16.2 Receiving of material shall be the responsibility of the Owner's Site Construction Supervisor and/or Construction Inspector with the assistance of the erection Contractor.

16.3 Material shall be subject to a receiving inspection as noted in Section 13.5 of this Specification.

17.0 ACCEPTANCE CRITERIA

17.1 Structural steel fabrication tolerances shall be in accordance with the AISC Specification for the Design, Fabrication and Erection of Structural Steel for Buildings and the Code of Standard Practice for Steel Buildings and Bridges.

17.2 Welding acceptance criteria is outlined in paragraph 13.2.

165

STRUCTURAL STEEL

PRICING SCHEDULE

1.0 The Vendor shall provide a unit price breakdown of his lump sum price in accordance with the following schedule. These prices will also be used as adds and deducts for changes in the scope of work.

	Item	Quantity for Base Bid		Unit Price Fabrication		Unit Price Delivery	
1.1	Heavy steel framing columns, beams, bracing and baseplates weighing 1,000 lbs or more per fabricated assembly including connection material and bolts.	_____	lbs	$_____	/lb	$_____	/lb
1.2	Light steel framing beams, braces and stairs weighing less than 1,000 lbs per assembly including connection material and bolts.	_____	lbs	$_____	/lb	$_____	/lb
1.3	Girt framing channels and sag rods	_____	lbs	$_____	/lb	$_____	/lb
1.4	1" galvanzied grating for platform and stair landings	_____	sq ft	$_____	/sq ft	$_____	/ sq ft
1.5	2'-6" stair treads with abrasive nosing	_____	total	$_____	/ea	$_____	/ea
1.6	1 1/2" pipe handrail 2 line level	_____	lin ft	$_____	/ft	$_____	/ft
1.7	1 1/2" pipe handrail 2 line sloped	_____	lin ft	$_____	/ft	$_____	/ft
1.8	Ladders and cages	_____	lbs	$_____	/lb	$_____	/lb
1.9	Toe Plates and pipe rings	_____	lin ft	$_____	/ft	$_____	/ft
1.10	Total floor deck (galvanized)	_____	sq ft	$_____	/sq ft	$_____	/sq ft

LAKHRA POWER FEASIBILITY STUDY

SPECIFICATION S-3

TURBINE ROOM OVERHEAD CRANE

LPS/B1469/D2

151'

SPECIFICATION S-3

TURBINE ROOM OVERHEAD CRANE

TABLE OF CONTENTS

		Page
1.0	DESCRIPTION OF WORK	1
2.0	WORK INCLUDED	1
3.0	WORK NOT INCLUDED	2
4.0	APPLICABLE CODES, STANDARDS AND REGULATORY REQUIREMENTS	2
5.0	SUPPLEMENTAL DATA	3
6.0	VENDOR DATA	3
7.0	DESIGN REQUIREMENTS	3
8.0	PERFORMANCE REQUIREMENTS	8
9.0	MATERIAL REQUIREMENTS	8
10.0	FABRICATION AND ASSEMBLY REQUIREMENTS	11
11.0	INSTALLATION REQUIREMENTS (NONE)	11
12.0	PERSONNEL REQUIREMENTS	11
13.0	INSPECTIONS AND TESTS	11
14.0	CLEANING, CORROSION PROTECTION AND COATING (NONE)	13
15.0	MARKING AND IDENTIFICATION	13
16.0	PACKAGING, SHIPPING AND STORAGE	13
17.0	ACCEPTANCE CRITERIA	14

ATTACHMENT 1 - Motor Specification

LAKHRA POWER FEASIBILITY STUDY

TECHNICAL SPECIFICATION S-3

TURBINE ROOM OVERHEAD CRANE

1.0 DESCRIPTION OF WORK

The scope of services to be performed consists of designing, fabricating, testing and delivering to the power plant jobsite an electrically operated overhead traveling type turbine room crane complete with all appurtenances, equipment, wiring and controls as described in this Specification.

2.0 WORK INCLUDED

2.1 The Work shall include, but not be necessarily limited to, the following:

2.1.1 One indoor overhead traveling type crane for the turbine generator area with a (later) tonnes (later) (tons) capacity main bridge crane and a (later) tonnes (later) (tons) capacity auxiliary hoist.

2.1.2 Furnish all overhead crane bridge structures for the electrically powered, longitudinal traveling crane including end trucks, girders, platforms, driver's cab, cross-travel crab incorporating independently driven main and auxiliary hoists and crab cross-travel motion.

2.1.3 Furnish all electrical equipment and controls for driving, hoisting and controlling each motion independently of the others.

2.1.4 Furnish electrically operated main and auxiliary hoists including cables, blocks, hook swivels, hooks and controls.

2.1.5 Furnish a power traveling warning device on the crane including all power equipment and controls.

2.1.6 Furnish access on the crane bridge to equipment and the driver's cab including walkway floor plate, ladder, handrails, and kick plates.

2.1.7 Furnish inspection lamp outlet sockets on the crane including its own transformer and double pole MCB.

2.1.8 Furnish outlets for the operation of hand-held power maintenance tools on the bridge crane.

2.1.9 Furnish permanent rated load markers in metric and English units on each side of the crane.

2.1.10 Furnish all bumpers, rail sweeps and brakes.

2.1.11 Furnish lighting along walkway, in operator's cab and on the bottom of each main crane girder.

2.1.12 Furnish general arrangement drawings, including sufficient details so that suitable building clearances can be provided, and motor outline dimensional drawings.

2.1.13 Furnish wiring diagrams, locations and sizes for all electrical terminal points for Purchaser's connections.

2.1.14 Furnish an optional erection advisor, if requested by the Purchaser.

2.1.15 Furnish operating and maintenance instruction manuals.

2.1.16 Furnish crane wheel loads on the runway rails.

3.0 WORK NOT INCLUDED

Building structures, support steel, crane runway, runway rails and erection are not covered by this Specification.

4.0 APPLICABLE CODES, STANDARDS AND REGULATORY REQUIREMENTS

4.1 All Work specified herein and covered by this Specification shall comply with, as a minimum, all applicable portions of the following codes, standards, and regulations:

4.1.1 ANSI/ASME B30.2, Standard for Overhead and Gantry Cranes (Top Running Bridge, Single or Multiple Girder, top running trolley hoist)

4.1.2 ANSI/ASME B30.10, Standard for Hooks

4.1.3 ANSI B30.16, Standard for Overhead Hoists (under hung)

4.1.4 Specifications for Electric Overhead Traveling Cranes by the Crane Manufacturers Association of America, Inc., Specification No. 70 (CMAA).

4.1.5 AWS D1.1, American Welding Society, Structural Welding Code

4.1.6 AWS D14.1, American Welding Society, Specification for Welding Industrial and Mill Cranes

4.1.7 AISC, American Institute of Steel Construction Manual, 8th Edition

4.1.8 ASTM A275, American Society for Testing Materials, Standard Method for Magnetic Particle Examination of Steel Forgings

4.1.9 IEEE 383, Section 2.5, IEEE Standard for Type Test of Class IE Electric Cables, Field Splices and Connections for Nuclear Power Generating Stations

4.1.10 ICEA Publication S-19-81, Insulated Cable Engineers Association Publication Revision 6 - January, 1983, Paragraph 5.6.2.1.1, Rubber-Insulated Wire and Cable for the Transmission and Distribution of Electrical Energy

4.1.11 ICEA Publication S-61-402, Insulated Cable Engineers Association Publication Revisions 1 through 10 (February, 1983), third Edition (July, 1983), Thermoplastic-Insulated Wire and Cable for the Transmission and Distribution of Electrical Energy

4.1.12 Code of Federal Regulations (CFR), Title 29 CFR, Part 1910, Occupational Safety and Health Standards

4.1.13 Specification for the Design, Fabrication and Erection of Structural Steel for Buildings.

4.1.14 NFPA-70, National Electric Code.

4.1.4 Code of Standard Practice for Steel Buildings and Bridges.

5.0 SUPPLEMENTAL DATA

The documents listed on the Table of Contents page as attachments are applicable to the Work, to the extent specified herein.

6.0 VENDOR DATA

The Vendor shall furnish all drawing and design information as noted in Section 2.0 of this Specification.

7.0 DESIGN REQUIREMENTS

7.1 General

7.1.1 The rated capacity of the overhead traveling crane shall be (later) tonnes (tons) for the main hoist and (later) tonnes (tons) for the auxiliary hoist. The main hoist and auxiliary hoist will not be required to lift rated capacity simultaneously.

7.1.2 The bridge span shall be (later) meters, (later) (feet), (later) (inches), center to center of runway rails.

7.1.3 The total length of runway rails will be (later) meters, (later) (feet), (later) (inches), center to center of the end crane girder support columns.

7.1.4 The minimum lift heights for both the main and auxiliary hooks shall be (later) meters, (later) feet, (later) inches.

7.1.5 The maximum speeds of the various motions at maximum full load (name plate capacity) shall be the following:

Main hook	.03 M/sec.	(6 fpm)
Auxiliary hook	.10 M/sec.	(20 fpm)
Trolley travel	.25 M/sec.	(50 fpm)
Bridge travel	.38 M/sec.	(75 fpm)

7.1.6 The Turbine Room crane shall be designed to operate indoors in a coal-fired power plant's steam driven turbine generator building. Service class shall be A1 (Standby Service) as defined by the Crane Manufacturer's Association of America.

7.1.7 The crane shall normally be operated from a driver's cab, but provisions shall be made also for pendant controls for operation from the turbine generator equipment floor below.

7.2 Crane Bridge

7.2.1 The crane bridge shall be of welded construction and field connections shall be bolted.

7.2.2 End trucks shall be of welded construction and be equipped with rail sweeps.

7.2.3 Bumpers shall be provided on the crane truck frame.

7.2.4 Bridge deflections and camber shall be in accordance with Section 3.3.3.1.6 of CMAA Specification No. 70.

7.2.5 The bridge drive mechanism shall be of the type and design most suitable for a crane of this size and service rating.

7.2.6 The bridge motor shall be equipped with an adequate brake system having equal braking capacity in either direction of travel. The bridge brakes shall operate automatically upon release of controls.

7.3 Trolley and Hoists

7.3.1 The trolley shall be equipped with rail sweeps and stops.

7.3.2 The hoisting drum shall be grooved right and left hand to receive the full run of hoisting cable without overlapping.

7.3.3 The trolley brakes shall operate automatically upon release of control.

7.3.4 The hoist motor brakes shall be equipped with a magnetically operated shoe-type brake.

7.3.5 A separate automatic load brake of ample size and capacity shall be provided on the main and auxiliary hoist to permit lowering of all the loads smoothly and under good control.

7.3.6 Each hoist shall be equipped with suitable upper and lower limit switches to prevent overtravel of the hook. There shall be no manual override to the limits of travel of the hooks.

7.4 Cab and Walkways

7.4.1 The operator's cab is to be of the open type for indoor service located on the side of the crane opposite the runway wiring. The cab shall be furnished with an operator's stool or permanent seat, lighting, fire extinguisher, solid checkered plate floor and adequate personnel safety devices.

7.4.2 A walkway shall be located on the drive girder side and shall have a steel checkered plate deck with a 100mm (4") toe board. A handrail 1,067mm (3'-6") high shall extend the full length of the walkway. Ample access shall be provided from the cab to the walkway.

7.4.3 The Vendor shall provide a protective crossover and handrails to allow personnel to cross over the bridge trucks safely.

7.4.4 The Vendor shall provide access including any necessary walkways and handrails to all normal maintenance items.

7.5 Power

The power available will be 400 volts, 3 phase, 50 hertz, 4 wire, solidly grounded.

7.6 Controls

7.6.1 The crane shall be capable of being controlled from both the operator's cab or by a pendant control station supported from

a trolley mounted on the crane bridge. The pendant station shall extend within 1,220mm (4 feet) of the operating floor below. The crane shall not be capable of being controlled from both locations simultaneously.

7.6.2 The location of the pendant control station shall be independent of the hook position.

7.6.3 Control shall be full magnetic for all motions.

7.6.4 Five points of speed control shall be provided for each motion.

7.6.5 The control shall provide for incremental movements by the operator.

7.6.6 Motor starters shall be furnished in NEMA 12 enclosures.

7.6.7 Timers shall be placed in the circuitry between the last two accelerating contactors to limit the maximum rate of acceleration.

7.6.8 Reverse plugging features shall be provided for all bridge and trolley motions.

7.6.9 All control panels are to be mounted on the crane bridge footwalk.

7.6.10 Combination starters and contactors shall be electrically held, circuit breaker type capable of holding in for the lowest voltage which the plant will survive and continue to operate.

7.6.11 The 400-220 volt control transformers shall be resin encapsulated and of the next standard volt-ampere rating above that normally furnished with one secondary fuse and the unfused 200 volt side grounded. The control transformer shall be connected so that it is de-energized when the breaker for the starter is opened.

7.6.12 Pilot lights, GE Type ET-16 or Owner approved equal, shall be provided for each starter. The thermal overload relay shall be three-pole.

7.6.13 Control voltage for all starters, including the contactor coil, shall be 200 volts a-c.

7.6.14 Resistors shall be rated for continuous crane service and shall be mounted near the control cabinets. Resistors shall be NEMA Class (later).

7.6.15 Protective enclosures shall be provided to prevent accidental contact by maintenance personnel.

7.6.16 Control circuits shall be 220 volts maximum.

7.6.17 A manual non-fused disconnect switch shall be furnished.

7.7 Lighting

7.7.1 The Vendor shall furnish lighting consisting of eight 1000 watt mercury lights including bulbs.

7.7.2 Lights shall be mounted under the walkway. Spacing shall be uniform along each side of the crane. Mounting arrangements should include provision for servicing the lights from the walkway and no part of the fixture should project below the bottoms of the girders.

7.7.3 The lighting fixtures shall be connected to the rigid conduit with a flexible conduit type connection.

7.7.4 A 3-pole, 2-wire (1-pole grounded), 20A 220 volt maintenance outlet receptacle shall be mounted near each end and center of crane; all three are to be located along the walkway.

7.7.5 A 10 KVA, 400 volt to 220 volt grounded neutral dry type transformer shall be provided for lighting service.

7.7.6 A 4-circuit thermal breaker type lighting panelboard with 25 ampere breakers shall be located in the cab for lighting control (2 circuits for lighting, 1 circuit for receptacles and 1 circuit for spare). Circuits shall be connected in such a manner that the lighting load will be balanced on the transformer.

7.7.7 A 220 volt convenience outlet shall also be provided in the operator's cab.

7.8 Wiring, Switchboards and Conductors

7.8.1 Cable and Wire

7.8.1.1 All cables shall be designed for service in a steam generating power plant wherein the conductor temperature does not exceed 80°C (176°F) for normal operation and 120°C (248°F) for emergency overload conditions.

7.8.1.2 All wiring and fittings shall conform to the requirements of the National Electrical Code.

7.8.1.3 Main conductor wires along the crane runway shall be provided complete with all necessary supports and fittings.

7.8.1.4 All conduit and wiring between motors and starters, lights and distribution panel, distribution panel and collector, and any other equipment shall be provided by the Vendor and shall be in accordance with the applicable referenced codes and standards noted in Section 4.0 of this Specification.

7.9 Motors

See attached Motor Specifications.

7.10 Painting

7.10.1 The crane shall be furnished with standard rust-inhibiting primer and a finish paint suitable for the indoor service as noted in this Specification.

7.10.2 Motors and other equipment shall be furnished with the manufacturer's and/or Vendor's standard shop primer and finish paints.

7.11 Lubrication

The crane shall be provided with all necessary lubrication fittings piped to accessible locations on the crane.

8.0 PERFORMANCE REQUIREMENTS

8.1 It is intended that the crane be a first class workable product with the type of service as indicated in this Specification.

8.2 It is also intended that the crane and appurtenances shall be capable of operation with normal maintenance for the life of the power plant. The Vendor shall furnish a standard warranty package for the type of equipment supplied.

8.3 The indoor electrically powered crane when installed and functioning shall be designed for the climatological conditions and service as noted in this Specification.

9.0 MATERIAL REQUIREMENTS

9.1 General

9.1.1 All crane welding shall be in accordance with AWS D1.1 and AWS D14.1.

9.1.2 All materials are to be new and traceable through the Vendor's Quality Assurance Program, such as mill test reports for all structural steel used.

9.2 Crane Bridge

9.2.1 Carbon steel shall be used in the bridge structure.

9.2.2 The end truck wheels shall be rim hardened, rolled steel having double flanges. The drivers may have either tapered or flat treads in accordance with the Vendor's recommendations and bushing requirements. The axles may be either rotating or stationary type and shall be fitted with anti-friction bearings or bronze bushings.

9.3 Trolley and Hoists

9.3.1 Trolley wheels shall be rim hardened rolled steel.

9.3.2 All hoist and trolley drive shaftings shall revolve in roller bearings.

9.3.3 The trolley axles shall be either rotating or stationary and equipped with anti-friction bearings or bronze bushings.

9.3.4 Hooks are to be high grade steel forgings and swivel on anti-friction type bearings. The main hook shall be of the sister type and the auxiliary hook shall be furnished with a single crane hook.

9.3.5 Wire rope shall be extra flexible (6 x 37) or as approved by the Purchaser.

9.3.6 All wire rope shall be preformed, improved plowed steel with an independent wire rope core.

9.4 Cab and Walkways

9.4.1 Operator's cab materials shall be Vendor's standard.

9.4.2 Walkway shall have a carbon steel checkered plate deck with carbon steel toe board. Angle iron or seamless steel pipe handrailing shall be furnished.

9.4.3 Ladders shall have carbon steel angle or plate type rails and solid 25mm (1") diameter steel rod type rungs.

9.5 Cable, Wiring, Switchboards and Conductors

9.5.1 Cable

9.5.1.1 All conductors shall be soft drawn stranded copper with tin or lead alloy coating.

9.5.1.2 Low-Voltage Power Cable

Low-voltage power cables shall have ethylene propylene or approved rubber or rubber-like insulation with a jacket of neoprene, hypalon or an approved equal type with a voltage rating of 600V for use on 400V ac, 220V ac, 250V dc and 125V dc systems. Cables 500 kcmil and smaller for ac three-phase service shall be three conductor and 750 kcmil and larger shall be single conductor. These cables will be specified to meet the flame resistance test described in the IEEE Standard 383.

9.5.1.3 Control Cable

Control cables shall be the multiconductor type with each conductor insulated with ethylene propylene or an approved rubber or rubber-like insulation and each conductor having a primary jacket of neoprene or hypalon or with cross-linked polyethylene and the cable core covered with a neoprene or hypalon jacket overall. They shall be rated 600V and the primary jackets or insulation shall be color coded in accordance with IPCEA S-19-81, Section 5.6.3, Method 1. Control cables will be specified to meet the flame resistance test described in the IEEE Standard 383. Control cables will be No. 14 AWG minimum.

9.5.2 <u>Wire</u>

9.5.2.1 All individual control wiring shall be 600V, No. 14 AWG minimum, Type TA or SIS, 90°C, stranded copper conductor capable of passing the IPCEA Pub S-61-402 Section 6.5.

9.5.2.2 A 600 volt, 3 phase, 3-wire, molded case thermal magnetic circuit breaker power distribution panel board shall be provided in operator's cab, consisting of a main breaker, a branch breaker for each motor and a breaker for the crane lighting transformer. All breakers shall be rated 600 volt, 3 phase except lighting transformer breaker which shall be 600 volt, 2-pole. Main breaker shall have provision for locking in the open position. The lighting transformer breaker shall be connected ahead of the main breaker.

9.5.2.3 Main conductor wires along the crane runway shall be enclosed safety type, such as Saf-T-Bar or purchaser approved equivalent. Insulation shall be rated 600 volts for indoor service. Double type collectors shall be provided.

9.5.2.4 Cross-conductors along the bridge shall be hard drawn copper supported by strain insulators. Insulation shall be rated 600 volts for indoor service. Double type collectors shall be provided.

9.6 Painting

9.6.1 The crane shall be painted with the Vendor's standard rust-inhibiting primer and a finish paint of safety yellow industrial type enamel.

9.6.2 Surface preparation shall be in accordance with the paint manufacturer's recommendations.

10.0 FABRICATION AND ASSEMBLY REQUIREMENTS

10.1 Fabrication and shop assembly shall be in accordance with Codes and Standards as noted in Section 4.0 of this Specification.

10.2 The Vendor shall maintain a Quality Assurance Program in accordance with industry standards and as noted in Section 13.5 of this Specification.

11.0 INSTALLATION REQUIREMENTS

None

12.0 PERSONNEL REQUIREMENTS

12.1 The Vendor's welders or welding operators shall be qualified in accordance with AWS D1.1 and D14.1.

12.2 The Vendor's inspectors shall not be involved in production work while acting as an inspector.

12.3 The Vendor's inspectors are to be ASNT qualified to SNT-TC-1A Level II as a minimum.

13.0 INSPECTIONS AND TESTS

13.1 General

13.1.1 All inspections and tests shall be in accordance with the codes and standards listed in Section 4.0 of this Specification.

13.1.2 The main crane hook shall be examined for cracks and discontinuities in accordance with ASTM A275.

13.1.3 It shall be the Vendor's responsibility to provide in-process, final visual and dimensional inspection of all the fabrication work.

13.1.4 The Vendor shall cooperate with the Purchaser and shall permit him access to all parts of the work at all times.

13.1.5 The Vendor shall notify the Purchaser in advance of when the major components are ready for final inspections.

13.2 Authority to Reject

The Purchaser shall have authority to reject all materials and workmanship not conforming to the Engineering Drawings and the Specifications. Any defective material or workmanship found during the progress of the work shall be promptly replaced or corrected by the Vendor to the satisfaction of the Purchaser.

13.3 Liability for Defective Material or Workmanship

If the Purchaser, through oversight or otherwise, has accepted material or work which is defective or contrary to the Engineering Drawings or the Specifications, this material or work, no matter in what stage of completion, may be rejected by the Purchaser.

13.4 Welding Inspection and Testing

13.4.1 All shop welding shall be visually inspected by the Vendor.

13.4.2 All defective welds shall be removed, repaired and reinspected in accordance with AWS D.1 by the Vendor prior to shipment.

13.5 Quality Assurance

The Vendor shall have a Quality Assurance Program in effect during the work covered by this Specification. As a minimum the Vendor shall maintain the following records for the Purchaser's review at the Vendor's facility.

13.5.1 Purchase Orders (unpriced).

13.5.2 Mill test reports for all structural steel.

13.5.3 NDE Personnel Qualifications.

13.5.4 In-Process fabrication records.

13.5.5 Major defect repair records.

13.5.6 Nonconformances, defined as non-compliances with Specifications and Drawings.

13.5.7 Final Inspection Reports and releases.

13.6 Purchaser's Receiving Inspections

13.6.1 The Purchaser's site construction supervisor and/or the construction inspector will randomly inspect material received to verify compliance with the applicable drawings, specifications, and codes or standards. This inspector will work closely with the Vendor to assure compliance with equipment specifications and that the components are received in an undamaged, new condition. These inspections will be documented and retained in on-site files.

13.6.2 If the delivered components are found to be undamaged and comply with the Drawings and Specifications, the Purchaser's on-site inspector will authorize release to construction. If warranted and agreed upon with the Vendor, the Purchaser or his designee may perform inspections at the manufacturing facility also as noted.

13.6.3 Deficiencies noted during receiving inspections will be processed using non-conformance reports. The Purchaser reserves the right to reject non-conforming or damaged material in accordance with Paragraphs 13.2 and 13.3 of this Specification.

14.0 CLEANING, CORROSION PROTECTION AND COATING

Refer to Paragraphs 7.10 and 9.6 of this Specification for painting and surface preparation requirements.

15.0 MARKING AND IDENTIFICATION

15.1 All pieces and components requiring visual identification during receiving inspections and erection shall be marked by the Vendor prior to shipment.

15.2 The piece and component mark numbers shall be painted on the individual piece and tags, where used, shall be securely held in place by wire. The tags shall be constructed from materials resistant to damage during shipment that would prevent them from being legible upon delivery or separated from the appropriate piece.

16.0 PACKAGING, SHIPPING AND STORAGE

16.1 It shall be the Vendor's responsibility to properly package the components for delivery to allow for shipment to the job-site in an undamaged condition.

16.2 All materials and components shall be shipped to:

(Later)

Attention:

(Later)

16.3 All items shall be subject to receiving inspection by the Purchaser as noted in Section 13.6.

16.4 The Vendor shall furnish standard storage instructions for the components shipped, in case the Purchaser needs to store them at the receiving location.

17.0 ACCEPTANCE CRITERIA

Final acceptance of the Vendor's work is subject to the provisions contained in this Specification including vendor drawings, welding tests, inspections, and operating/maintenance manuals submittals.

172

ATTACHMENT 1

Refer to Electrical Motor Specifications E-1 and E-2.

LAKHRA POWER FEASIBILITY STUDY

SPECIFICATION S-4

COAL HANDLING SYSTEM

LPS2/B3839/D10

SPECIFICATION S-4
COAL HANDLING SYSTEM

TABLE OF CONTENTS

Item		Page
1.0	DESCRIPTION OF WORK	1
2.0	WORK INCLUDED	1
3.0	WORK NOT INCLUDED	4
4.0	APPLICABLE CODES, STANDARDS, AND REGULATIONS	6
5.0	SUPPLEMENTAL DATA	8
6.0	VENDOR DATA	11
7.0	DESIGN REQUIREMENTS	22
8.0	PERFORMANCE REQUIREMENTS	25
9.0	MATERIAL REQUIREMENTS	25
10.0	FABRICATION AND ASSEMBLY REQUIREMENTS	63
11.0	INSTALLATION REQUIREMENTS	64
12.0	PERSONNEL REQUIREMENTS	65
13.0	INSPECTIONS AND TESTS	65
14.0	CLEANING, CORROSION PROTECTION AND COATING	70
15.0	MARKING AND IDENTIFICATION	73
16.0	PACKAGING, SHIPPING, AND STORAGE	74
17.0	ACCEPTANCE CRITERIA	76

TABLE OF CONTENTS
(Continued)

ATTACHMENTS:

2A BELT CONVEYOR DATA SHEETS (2 Pages)

2B STANDARD STRUCTURAL STEEL DETAILS
(Index and 15 Pages)

2C ELECTRIC MOTOR SPECIFICATION

2D EXCEPTIONS TO INQUIRY (1 Page)

2E MINIMUM STANDARD BEAM CONNECTIONS (2 Pages)

LAKHRA POWER FEASIBILITY STUDY
TECHNICAL SPECIFICATION S-4
COAL HANDLING SYSTEM

1.0 DESCRIPTION OF WORK

1.1 The work to be performed consists of detail design, fabrication, procurement, delivery, erection, and testing of all items specified for the Lakhra Power Project Coal Handling System, including but not limited to conveying and feeding equipment, steel structures, machinery, electrical items, mechanical systems, and architectural items.

1.2 Electrical items to be included are electric motors, motor starters, belt conveyor motor controllers, limit switches, belt misalignment switches, speed switches, emergency pull cord switches, and chute plug switches.

1.3 Structural items to be included are: Structural steel for galleries, bents, transfer and crusher houses, grating, handrail and concrete storage silos.

1.4 Architectural items to be included are roofing, siding, metal louvers, doors, and accessories.

2.0 WORK INCLUDED

The following is a list of equipment and structures included within the scope of this contract:

2.1 Belt Conveyors - 14 Required

#1	Unloading Conveyor - 1450 tonnes/hr (1600 TPH,) 1.2M (48") belt at 3M/Sec. (600 FPM)
#2	Silo Feed Conveyor with Traveling Tripper 1450 tonnes/hr (1600 TPH,) 1.2M (48") belt at 3M/Sec. (600 FPM)
#3	Emergency Stackout Conveyor with telescopic chute - 1450 tonnes/hr (1600 TPH,) 1.2M (48") belt at 3M/Sec. (600 FPM)
#4A	Active Silo Reclaim - 725 tonnes/hr (800 TPH), .9M (36") belt at 2.5M/Sec. (500 FPM)
#4B	Active Silo Reclaim - 725 tonnes/hr (800 TPH), .9M (36") belt at 2.5M/Sec. (500 FPM)
#5	Emergency Reclaim - 725 tonnes/hr (800 TPH), .9M (36") belt at 2.5M/Sec. (500 FPM)
#6A	Plant Supply - 725 tonnes/hr (800 TPH), .9M (36") belt at 2.5M/Sec. (500 FPM)

#6B	Plant Supply - 725 tonnes/hr (800 TPH), .9M (36") belt at 2.5M/Sec. (500 FPM)
#7A	Unit 1 Silo Loading Belt with Traveling Tripper - 725 tonnes/hr (800 TPH), .9M (36") belt at 2.5M/Sec. (500 FPM)
#7B	Unit 1 Silo Loading Belt with Traveling Tripper - 725 tonnes/hr (800 TPH), .9M (36") belt at 2.5M/Sec. (500 FPM)
#8A	Plant Forwarding - 725 tonnes/hr (800 TPH), .9M (36") belt at 2.5M/Sec. (500 FPM)
#8B	Plant Forwarding - 725 tonnes/hr (800 TPH), .9M (36") belt at 2.5M/Sec. (500 FPM)
#9A	Unit 2 Silo Loading Belt with Traveling Tripper - 725 tonnes/hr (800 TPH), .9M (36") belt at 2.5M/Sec. (500 FPM)
#9B	Unit 2 Silo Loading Belt with Traveling Tripper - 725 tonnes/hr (800 TPH), .9M (36") belt at 2.5M/Sec. (500 FPM)

2.2 Flat Belt Feeders - 16 Required

4	Unloading Hoppers - 1.2M (48") x 3.04M (10') flat belt - 362 tonnes/hr (400 TPH)
16	Active Silo Unloading - 1.2M (48") x 6M (20') flat belt - 362 tonnes/hr (400 TPH)
2	Crusher Feeders - 1.5M (60") x 3.04M (10') flat belt - 728 tonnes/hr (800 TPH)
1	Emergency Reclaim - 1.5m x 3.04m (60" x 10') flat belt - 725 tonnes/hr (800 TPH)
3	Tripper Feeder - 1.5m x 4.57m (60" x 15") flat belt - 725 tonnes/hr (800 TPH)

2.3 Crushers - 2 Required

2 728 tonnes/hr (800 TPH), ring type crushers

2.4 Magnetic Separator - 2 Required

1	Unloading Conveyor
1	Emergency Reclaim Conveyor

2.5 Electronic Belt Weigh Scale - 3 Required

1	Unloading Conveyor - 1.2M (48") 1450 tonnes/hr (1600 TPH) with totalizer
2	Plant Supply Conveyors - .9M (36") 725 tonnes/hr (800 TPH) with totalizer

2.6 Sampling Systems

1	2 Stage "as received" - Mechanical Sampling System
1	2 Stage "as fired" - Mechanical Sampling System

2.7 Active Storage Silos

4	13,640 tonnes/hr (15,000 TPH) reinforced concrete silos, 21.4M x 45.7M (70'Ø x 190') tall with four expanded flow type discharge hoppers.

2.8 Slide Gates - 24 Required

4	Receiving Hopper
16	Active Storage Silos
2	Crusher House Surge Hopper
1	Emergency Reclaim Hopper
1	Inplant Surge Hopper

2.9 Flop Gates - 3 Required

1	Transfer House Chutework
2	Under Crushers

2.10 Chutes, Skirts, Etc.

1	Item of Steel Chutes, Loading Skirts, Dust Hoods, etc.

2.11 The following is a list of components to be provided by the Vendor:

2.11.1 Equipment

Coal Crushers
Telescopic Chute
Traveling Tripper
Dribble Flight Conveyors
Magnetic Separators
Feeders, 48" and 60", Flat Belt
Weigh Scales, Belt Conveyor
Belting and Splice Materials
Idlers
Pulleys
Backstops
Shafting
Bearings
Couplings
Gear Reducers

19

Roller Chain and Sprockets
Chain Casings
Belt Cleaners
Pulley Scrapers
Conveyor Take-ups
Gates, Flop, and Slide
Gate Operators with Position Feedback Limit Switches
Common Drive Bases
Conveyor Covers and Cover Supports
Machinery Fasteners
Conveyor Tables
Chutes, Hoppers, Casings, Loading Skirts, and Wear Liners
Doors, Inspection/Access
Guards
Steel Plate Partitions and Seals

2.11.2 Embedded Material and Structural Steel

Anchor Bolts
Expansion Anchors
Handrailing and Toeplates
Grating and Stair Treads
Checkered Floor Plate
Stairs/Ladders - With and Without Safety Cages
Access Platforms and Walkways
Roof Framing and Purlins
Wall Framing, Girts and Sag Rods
Hoist Beams
Wind Bracing

2.11.3 Electric Equipment

Electric Motors
Motor Starters (Solid State - Reduced Voltage)
Limit Switches
Emergency Stop Switches
Chute Plug Switches
Belt Misalignment Switches
Zero Speed Switches

2.11.4 Roofing, Siding, Flashing, and Doors

3.0 WORK NOT INCLUDED

3.1 The following work will be done by the Owner or Others.

3.2 CIVIL/STRUCTURAL

a. Excavation, fill, and finish grading

b. Sheet pile wall construction

c. All concrete and concrete work except storage silos

d. Reinforcing steel in concrete work

e. Road work

3.3 MECHANICAL

a. Fire protection

b. Dust collection systems

c. Ventilation fan motor starters

d. Ventilation systems

3.4 ELECTRICAL

The following items are to be furnished and installed by others:

a. 400V and 6900V power supplies

b. Lighting systems

c. Grounding

d. Plant communication systems

e. Conduit, cable tray, cable, pull boxes, termination boxes, and all support systems including all necessary fasteners and fittings.

f. 280V, 1 phase, 50 hertz outlets

g. 400V, 3 phase, 50 hertz service outlets

h. Electric motor wiring (except motors which are Vendor mounted as an integral part of the equipment)

i. Coal handling control system and devices

3.5 EARLY DELIVERY ITEMS

The Owner will require the following items furnished, but not installed by the Vendor:

a. Foundation anchor bolts.

b. Hopper embedded steel.

c. Sleeves, pipes, and miscellaneous items cast in concrete.

4.0 APPLICABLE CODES, STANDARDS, AND REGULATIONS

4.1 The Vendor shall comply with the latest editions and applicable sections, unless otherwise noted, of the codes, standards, guides, and regulations issued by the following organizations:

4.1.1 American Society of Mechanical Engineers (ASME)

4.1.2 American Society of Testing and Materials (ASTM)

4.1.3 American Gear Manufacturer's Association (AGMA)

4.1.4 American Sprocket and Chain Manufacturer's Association (ASCMA)

4.1.5 American National Standards Institute (ANSI)

4.1.6 Rubber Manufacturer's Association (RMA)

4.1.7 Conveyor Equipment Manufacturer's Association (CEMA)

4.1.8 American Institute of Steel Construction (AISC)

4.1.9 National Micrographics Association (NMA)

4.1.10 American Iron and Steel Institute (AISI)

4.1.11 Steel Structures Painting Council (SSPC)

4.1.12 American Welding Society (AWS)

4.1.13 Anti-Friction Bearing Manufacturer's Association (AFBMA)

4.1.14 American Society of Heating, Refrigeration and Air Conditioning Engineers (ASHRAE)

4.1.15 Sheet Metal and Air Conditioning Contractors National Association (SMACNA)

4.1.16 Underwriters' Laboratories (UL)

4.1.17 Association of Edison Illuminating Companies (AEIC).

4.2 The Vendor shall comply with the latest editions and applicable sections, unless otherwise noted, of the following codes, standards, guides, and regulations:

4.2.1 National Electric Code (NEC) Articles 500 and 502.

4.3 AMERICAN NATIONAL STANDARDS INSTITUTE (ANSI)

4.3.1	ANSI A58.1	Building Code Requirements for Minimum Design Loads in Buildings and Other Structures
4.3.2	ANSI/AFBMA 9	Load Ratings and Fatique Life for Ball Bearings B3.15
4.3.3	ANSI/AFBMA 11	Load Ratings and Fatigue Life for Roller Bearings B.3-15
4.3.4	ANSI B16.9	Factory-Made Wrought Steel Buttwelding Fittings
4.3.5	ANSI B16.11	Forged Steel Fittings, Socket-Welding and Threaded
4.3.6	ANSI B.4.1	Preferred Limits and Fits for Cylindrical Parts
4.3.7	ANSI C33.26	Safety Standard for Thermal Protectors for Motors
4.3.8	ANSI B105.1	Standard Steel Drum Pulleys and Shafting
4.3.9	ANSI Z55.1	Gray Finishes for Industrial Apparatus and Equipment

4.4 AMERICAN SOCIETY OF TESTING AND MATERIALS (ASTM)

4.4.1	ASTM A-36	Specification for Structural Steel, Shapes, and Plates
4.4.2	ASTM A-53	Specification for Pipe, Steel, Black, and Hot-Dipped, Zinc-Coated, Welded, and Seamless

183

4.4.3	ASTM A-105	Specification for Forgings, Carbon Steel, for Piping Components
4.4.4	ASTM A-106	Specification for Seamless Carbon Steel Pipe for High-Temperature Service and Pipe, Steel, Black and Hot-Dipped, Zinc-Coated (Galvanized), Welded, and Seamless for Ordinary Uses
4.4.5	ASTM A120	Pipe, Steel, Black, and Hot-Dipped Zinc-Coated (Galvanized) Welded and Seamless for Ordinary Uses
4.4.6	ASTM A-123	Specification for Zinc (hot-galvanized) Coatings on Products Fabricated from Rolled, Pressed, and Forged Steel Shapes, Plates, Bars, and Strip
4.4.7	ASTM A-153	Specification for Zinc Coating (hot-dip) on Iron and Steel Hardware
4.4.8	ASTM A-234	Specification for Piping Fittings of Wrought Carbon Steel and Alloy Steel for Moderate and Elevated Temperatures
4.4.9	ASTM A-242	Specification for High-Strength Low-Alloy Structural Steel
4.4.10	ASTM A-307	Specification for Carbon Steel Externally Threaded Standard Fasteners
4.4.11	ASTM A-325	Specification for High-Strength Bolts for Structural Steel Joints
4.4.12	ASTM A-569	Specification for Steel, Carbon (0.15 maximum, percent), Hot-Rolled-Sheet and Strip, Commercial Quality
4.4.13	ASTM E-709	Standard Recommended Practice for Magnetic Particle Examination

5.0 SUPPLEMENTAL DATA

5.1 DEFINITIONS

5.1.1 Concurrence

"Concurrence" when used to denote Owner or Owner's Engineer's action, indicates agreement and endorsement of a document's

content for use. Responsibility for the adequacy of the document rests with the Vendor.

5.1.2 Engineering Drawings

"Drawings," for the purpose of this Specification, will be Engineering Drawings furnished by the Owner's Engineer and listed in Article 6 of this Specification and Vendor Drawings supplied by the Vendor or his Subvendors.

5.1.3 Erector

"Erector," is the organization which has entered into a contract with the Owner to unload and erect the material and equipment supplied for the Coal Handling Modifications and Additions.

5.1.4 Inspector/Owner's Representative

"Inspector," is the authorized representative of the Owner.

5.1.5 Jobsite

"Jobsite" (to be announced at a later date).

5.1.6 Owner

"Owner," for the purpose of this Specification (to be announced at a later date).

5.1.7 Owner's Engineer

"Owner's Engineer" is Gilbert/Commonwealth International Inc., 209 East Washington Avenue, Jackson, Michigan 49201.

5.1.8 Owner's Project Manager

"Owner's Project Manager" is the Owner's representative assigned to manage this project. He is responsible for project direction, control, and coordination.

5.1.9 Owner's Superintendent

"Owner's Superintendent" is the Owner's authorized field representative assigned to this project so designated in writing by the Owner. He is responsible for the acceptance or rejection of material and equipment supplied in accordance with this Specification, upon delivery to the plant site.

5.1.10 Specification

"Specification" includes this document and all provisions, appendices, addenda, drawings, and attachments hereto and all drawings furnished by the Owner's Engineer required for the successful completion of the work specified herein.

5.1.11 Vendor/C.H.E.M. (Coal Handling Equipment Manufacturer)

"Vendor" is the organization responsible for furnishing and erecting the Coal Handling system in accordance with this Specification for the Owner.

5.1.12 Work

"Work" shall include those items and services to be supplied by the Vendor as described in all articles of this Specification.

5.2 EXAMINATION OF PLANS AND SITE

5.2.1 The Vendor shall be held to have examined the plans and jobsite and familiarized himself with all considerations which would affect the accomplishment of the proposed construction and his price submitted in the Proposal. No allowance shall be subsequently claimed in behalf of the Vendor by reason of his failure to do this.

5.2.2 Prior arrangements for a site examination shall be made with the Owner's Superintendent.

5.2.3 Dimensions given on the Engineering Drawings pertaining to the work are believed to be reliable, however, the Vendor is required to make a field check prior to preparing Shop Drawings to assure himself that the shop fabricated parts will fit when erected in the field. If inconsistencies are found, the Vendor shall notify the Owner's Superintendent in writing immediately.

5.3 MATERIALS

All material furnished by the Vendor and covered in this Specification, Purchase Orders, and subsequent contracts shall be new and of first class quality.

5.4 SPARE PARTS

The Vendor shall furnish with the Proposal, a complete list of recommended spare parts, including electrical spare parts, and a listing of all special tools or devices required to operate or maintain the equipment. The Vendor shall state lead times (in weeks) for long delivery parts.

186

5.5 ADVISOR SERVICES

5.5.1 Start-Up and Operating Advisors

The Vendor shall furnish, as required by the Work, one or more qualified and experienced start-up and operating advisors at the plant site to advise and make recommendations with respect to the initial starting and placing of the equipment furnished under this Contract into operation. These personnel shall have authority granted by the Vendor sufficient to resolve without delay all normal problems and to recommend such technical modifications as may be necessary for proper operation of the equipment.

5.6 PROPOSED SCHEDULE

The proposed schedule for the Coal Handling System is as follows:

Issue for Bids

Pre-Bid Meeting

Bids Due

Award of Contract

Pre-Engineering Meeting

Complete Equipment Delivery

Start of Erection

Erection Completion

Start Test Period

System Operational

Dates to be Determined at a Later Date

6.0 VENDOR DATA

6.1 GENERAL

6.1.1 A prebid meeting will be arranged by the Owner at his descretion.

6.1.2 A site visit, to ascertain all conditions, is required of all Bidders.

6.1.3 Bidders shall communicate with the Owner's Engineer on all questions, clarifications, etc., of a technical nature during the bidding stage.

6.1.4 The successful Vendor is required to attend a pre-engineering meeting within 10 working days after award of contract.

6.1.5 Bidders shall state all exceptions to the Technical Specifications and Drawings in the Proposal, see Attachment 2D.

6.1.6 When more than one Subvendor or Supplier is specified, the Bidder will state specifically the Subvendor or Supplier he will furnish in the Proposal.

6.1.7 All Bidders will communicate any discrepancies or omissions to the Owner's Engineer during the bid stage.

6.1.8 The following is a listing of the Bid Drawings:

(Later)

6.1.9 <u>Reduced Voltage Motor Starters for Belt Conveyors</u>

The Vendor shall provide the following information:

a. Motor starter outline drawings shall be fully dimensioned and include the following:

   1. size of enclosure and type,

   2. location and size of conduit openings and ground pad,

   3. location of all internal equipment,

   4. total panel weight, and

   5. location of mounting feed.

b. Complete schematic and wiring diagrams shall be submitted for each starter furnished.

c. Operation and Maintenance Manuals, see 6.2.7:

   1. Complete information for starter storage, installation assembly, disassembly, operation, and maintenance.

2. Complete Bills of Material and spare parts lists for each type of component including manufacturer, type, and catalog numbers of accessories.

3. Complete checkout, operation, and troubleshooting instructions.

6.1.10 Miscellaneous Controls

The Vendor shall furnish the following information:

a. Control equipment outline drawings shall be furnished and shall include:

1. size of enclosure and type,

2. location and size of conduit opening,

3. chart to indicate total quantity of each equipment type and where they will be used, and

4. mounting information drawings.

b. Wiring diagrams for each equipment type furnished.

c. Operation and Maintenance Manuals, see 6.2.7:

1. Complete information for equipment storage, installation, assembly, disassembly, operation, and maintenance.

2. Complete Bills of Material and spare parts lists for each equipment type including manufacturer, type, and catalog number.

6.2 DETAILED INFORMATION REQUIRED AFTER AWARD OF CONTRACT

6.2.1 The successful Vendor shall submit a monthly progress report to Gilbert/Commonwealth International Inc., 209 East Washington Avenue, Jackson, Michigan 49201, Attention: _____ Project Manager. This report shall be updated and issued monthly and shall contain specific engineering, procurement, fabrication, shipping, and erection progress schedules supporting the delivery of equipment-in-operation dates.

Actual format shall be determined at the pre-engineering meeting.

181

6.2.2 The Vendor shall furnish all necessary drawings, diagrams, schematics, details, and other information relative to the equipment and structures included in the Proposal to permit the Owner's Engineer to design and coordinate auxiliary equipment and systems associated therewith. An equipment tabulation shall be furnished in drawing form.

6.2.3 One copy of all design calculations prepared for all elements and additions of the Coal Handling System and shall be furnished to the Owner's Engineer upon completion of the Vendor's engineering phase. A listing of anticipated calculations shall be prepared for the pre-engineering meeting.

6.2.4 Drawings for all equipment and structures shall be submitted in accordance with the Article 6.2.5 schedule. Only checked Vendor's drawings shall be submitted for approval.

6.2.5 The following drawings are required without delay after the award of the contract. These drawings shall be submitted in accordance with the following schedule for modifications and additions.

	Design Information (Weeks)	For Approval (Weeks)
	(Weeks After Award)	
a. General Arrangements and Equipment Drawings		
b. Mechanical Outlines		
c. Setting drawings showing all foundation and interfacing structural steel loads, anchor bolt locations, bolt sizes, bolt lengths, thread lengths, including elevation of to top bolts and all other embedded metal details.		
d. Electrical Equipment Layout Drawings		
e. Motor Outlines and Information with complete Motor Summary Data Sheets for each motor		

	Design Information (Weeks)	For Approval (Weeks)
	(Weeks After Award)	
f. Complete Electrical Bills of Material (in drawing form)		
g. Nameplate drawings for all equipment		

(Time frames to be determined at a later date)

6.2.6 Drawings

a. General The successful Vendor and his Subvendors shall prepare and furnish drawings, diagrams, schematics, details relative to the equipment, structures, and ancilliary systems for the Coal Handling System and all items covered by the Specification and the Contract.

b. Drawing Quality

Drawings prepared by the Vendor shall meet the requirements of the "Drafting Guide for Microfilm," NMA MS102-1971. Should the Owner's Engineer receive drawings that do not meet this standard or are otherwise unacceptable for microfilm procedures, the Vendor shall be requested to furnish an acceptable copy. If a copy acceptable to the Owner's Engineer is not or cannot be furnished by the Vendor, the Owner's Engineer will redraw the drawing. The cost incurred by the Owner's Engineer to generate an acceptable drawing will be assessed against the Vendor, by the Owner, at the Owner's Engineer's current rate.

c. Final Reproducibles

The final reproducibles shall be photographically produced as a stable base mylar "Cronaflex" from the original drawings and shall be of such quality that well defined microfilm aperture cards may be produced. All prints and reproducibles shall be of such quality as to be suitable for microfilm reproduction.

Film stock for microfilming shall be of the type approved for archival standards and shall meet the requirements of the Military Standard MIL-M-9868D-1970 for Microfilming

of Engineering Drawings. The copies may be furnished unmounted in reel form or mounted in an aperture index card. If furnished unmounted, the film shall be capable of being readily removed to permit transferring of film to Owner's aperture record card. The microfilm copy shall be of the silver halide process. The film shall be a background density of 1.1 as read on a standard transmission densitometer.

Reproducibles shall be furnished without any folds or creases therein and shall include all drawings prepared for this Contract.

d. Document Reproduction

All or part of Vendor's drawings, sketches, or instructions may be copied or reproduced as necessary for the Owner's use. This shall include design interface with other systems, i.e., electrical terminal connections, piping conections, etc. This shall include documents that are labeled "Copyright."

e. As-Built Drawings

As-built drawings shall be furnished as in c. above.

f. Weights of all equipment shall be shown on the general arrangement drawings.

6.2.7 Manuals

The Vendor shall furnish 15 copies of instruction manuals. It shall be the Vendor's responsibility to include all requirements for manuals as part of Subvendor's contracts. The Vendor shall collect and assemble this information as part of the manufacturer's instruction manuals. The manufacturer's instruction manual shall include:

a. Operating Instructions

b. Maintenance and Lubrication Instructions

c. Assembly and Bill of Material Parts List

d. Special Tools Required for Maintenance

e. Warranty Information

f. Service Information

g. Parts Ordering Information

h. Manufacturer's Address and Telephone

i. Vendor's Address and Telephone

Instruction Manuals shall include all literature that would be useful in the handling, storage, installation, operation, and maintenance of the equipment, with complete equipment identification data, including complete model number, serial number, options, specials, and accessories. Nomenclature used to reference each item shall be consistent throughout the manuals.

Information furnished shall be complete for main and auxiliary equipment and systems. Material that does not contribute to the understanding of the design, handling, storage, installation, operation, and maintenance of the equipment shall be excluded.

Use shall be made of drawings, diagrams (including wiring diagrams), pictures, or actual photographs when they add to the understanding and clarity of the text.

Precautions and warnings relative to the safety of life and equipment shall be included where applicable.

It is recognized that there are commercial-type handbooks for many items of equipment. This type of information may be utilized under the following conditions:

a. Where published material is available in a form that contains the essential information required, such material may be utilized in whole or in part if properly integrated and indexed into the overall Instruction Manual. For example, Contractor may utilize instructions for subassemblies or component parts that are furnished by manufacturers who supply instruction handbooks on their subassemblies, as in the case of a thrust bearing on a turbine.

b. If the publication of the subassembly or component part manufacturer does not contain a complete care, operation, maintenance, and parts breakdown meeting the intent of these requirements, it shall be the responsibility of the Contractor to include such information in its Instruction Manual or to arrange with the subassembly manufacturer to provide a publication that will meet these requirements.

c. Where the subassembly or component part item is of such a nature that local repair normally is not employed, and the item is usually returned to the factory as a unit for overhaul, reference shall be made to such fact in the Instruction Manual.

The instruction manuals shall be assembled as follows:

a. All printed material, such as standard booklets, shall be original documents and not copies of such material. Any printed material provided shall be clear and of high quality suitable for use in the instruction manuals over a long period of time by operations and maintenance personnel.

b. The instruction manual shall have a numbered index.

c. The various sections of the instruction manuals shall be separated with dividing tabs with section numbers which correspond with the numbered index. The dividing tabs shall have mylar reinforced tabs and binder holes.

d. Any drawings which are provided as part of the manual that cannot be inserted as a single page shall be folded and placed in a plastic print holder with the opening at the top.

Manuals shall be assembled in hard cover 3-ring (or threaded rod) binders no wider than 76mm (3") and in as many volumes as required. Manuals shall have proper identification on the edge surface permanently bonded to the notebook and have a complete index in the front of all volumes.

Manuals shall contain a specific section where reduced drawings covering general equipment arrangement, parts and parts list, Subvendor component and parts drawing, machinery layouts, certified drawings, and other drawings providing pertinent information may readily be identified. A drawing index shall be provided.

Manuals are to be supplemented after initial issue and with the appropriate number of copies with exclusions, additional information, as-built drawings, and any other information required to complete the manuals. Instructions for manual inclusions shall accompany supplemental information.

Before manuals are assembled, a finalized index and summarized listing of inclusions shall be sent to the Owner's Engineers for review 2 weeks after completion of engineering.

The final instruction manuals shall be submitted 3 weeks before system is ready for "dry run" operational test.

6.2.8 Spare Parts

The successful Vendor shall submit a complete parts list and a list of recommended spare parts and lead times for each part with the manuals.

Spare parts shall include long term delivery items, special machinery items, etc.

6.3 APPROVAL OF VENDOR DRAWINGS

6.3.1 Release of Engineering Design Drawings

Engineering Drawings suitable for detailing and determining mill orders will be available to the Vendor starting on or about the date of the pre-engineering meeting.

6.3.2 Drawing Approval

Approval of Vendor's Detail Drawings constitutes approval as to size and assembly of members, general dimensions, external clearances, interface wiring, basic control, and details of operation only. This approval does not relieve the Vendor of the reponsibility for accuracy of the detail dimensions.

6.3.3 Shop Drawing Requirments

a. The title of each Vendor Drawing shall indicate the part of the structure for which the drawing has been made.

b. The Vendor's Drawings shall include the plant name, the Gilbert/Commonwealth number, and the P.O. number at the time the Vendor's Drawing is submitted for approval.

c. The Vendor Drawings shall reference the Engineering Drawings.

6.3.4 Drawing Approval Procedures

Vendor's Drawings for approval shall be sent prepaid to:

a. Gilbert/Commonwealth International Inc.
209 East Washington Avenue
Jackson, Michigan 49201

Attention: _____
Project Manager

b. (Owner's Address Later)

6.3.5 Four sets of prints and one reproducible of all Vendor's Drawings shall be submitted for approval to the Owner's Engineer. In addition one set of prints shall be submitted directly to the Owner.

6.3.6 Vendor's Drawings are to be forwarded to the Owner's Engineer for approval in accordance with the schedule given in Section 2, Article 6.2.5.

6.3.7 Only checked Vendor's Drawings shall be submitted for approval.

6.3.8 The Owner's Engineer will check the Vendor's Drawings. One copy of the checked Vendor's Drawings will be returned within a maximum of 14 working days after they are received to the Vendor either marked "Approved," "Approved As Noted," "Returned With Comments," or "Not Approved." Vendor's Drawings approved shall be returned in accordance with Article 6.3.9. Vendor's Drawings approved as noted shall be corrected and returned within 14 working days after drawings are received, in accordance with Article 6.3.9. Vendor's Drawings returned with comments or not approved shall be resubmitted for approval, within 10 working days after drawings are received, in accordance with Article 6.3.7. The resubmittal may be waived by the Owner's Engineer at his discretion.

6.3.9 One full size print, two full size reproducibles, and two 35 mm microfilm copies of approved certified Vendor's Drawings shall be submitted for filing and field distribution purposes.

6.3.10 The Contractor shall submit balancing results and data from the air distribution system testing for record.

6.4 MICROFILM

All prints and reproducibles shall be of such quality as to be suitable for microfilm reproduction.

6.5 TYPES OF DRAWINGS FOR APPROVAL

Drawing types to be submitted for approval, comment, and/or review are as follows:

a. Certified Subvendor Equipment Drawings

b. System and Equipment General Arrangements

c. Structural Platework Details with and without Liners

d. Structural Steel - Design, Loadings, Layouts, Details, and Erection

e. Bolt Lists

f. Embedded Metal Details

g. Handrailing Details

h. Grating, Checkered Floor Plate Layout and Details

i. Machinery, Component, and Parts Drawings

j. Conveyor Covers and Cover Supports Details

k. Motor Data Sheets, Speed versus Torque Curves, Speed versus Ampere Curves, Ampere versus Time Curves for Nondamage, Outline Drawing, Motor Weights, and Information

l. Electrical Equipment Layout and Drawings

m. Electrical Bills of Material

6.5.1 Drawings prepared for interfacing structural steel foundation loading, anchor bolt details, embedded metal details, form design, and details shall be sumbitted within 3 weeks after award of contract. Additional required early information and drawings is defined in Article 6.2.5.

6.5.2 All drawings certified (and identified as such) for manufacture, fabrication, construction, erection, etc., shall be submitted 3 weeks before commencing these activities. Quantities shall be submitted in accordance with Article 6.3.9.

6.6 FINAL DISTRIBUTION OF INFORMATION

All original shop detail drawings, erection drawings, additional drawings, parts lists, manuals, Bills of Material, and printed

matter prepared by the Vendor shall become the property of the Owner and shall be shipped prepaid upon completion of the work to:

Gilbert/Commonwealth International Inc.
209 East Washington Avenue
Jackson, Michigan 49201

Attention: _____
Project Manager

7.0 DESIGN REQUIREMENTS

The specific structural, mechanical, electrical, and electronic component design requirements are stated throughout this Specification and the preferred details and arrangements are shown on the bid drawings as listed in Paragraph 6.1.8.

7.1 MATERIALS TO BE HANDLED

Pakistani Lakhra Subbituminous to Lignite Coal with the following characteristics:

a. Size: 0mm x 100mm (0" - 4")

b. Moisture: 20 percent to 35 percent

c. Bulk Density: 881 Kgs per cubic meter (55 lbs per cubic foot) (Normal)

1041 Kgs per cubic meter (65 lbs per cubic foot) (for structural and belting design)

801 Kgs per cubic meter (50 lbs per cubic foot) (for conveyor capacity calculations)

d. Angle of Repose: 38 degrees

e. Angle of Surcharge: 20 degrees

f. Hardgrove Grindability: 68-95

g. Abrasistivity Index: High

7.2 SYSTEM CAPACITIES

Unloading	1450 tonnes (1600 TPH)
Stacking	1450 tonnes (1600 TPH)

Reclaiming	725 tonnes (800 TPH)
Plant Coaling	725 tonnes (800 TPH) (on two belt conveyors)

7.3 GENERAL REQUIREMENTS

7.3.1 The Coal Handling System shall be capable of operating in an ambient temperature range of 5°C to 50°C (41°F to 122°F).

7.3.2 All belt conveyors shall have equipment with soft starting capability supplied by the Vendor. These belt conveyors shall have smooth acceleration to their operating speed without damage to the driven equipment. The conveyor belts shall be protected against damage from drive pulley slippage or excessive belt tension.

7.3.3 Central loading of materials is required on all belt conveyors under all operating conditions.

7.3.4 Conveyor configurations, work points, inclines, curve data, and horizontal pulley centers are given on the bid drawings. Belt conveyors, and feeders shall be designed to start empty or fully loaded.

7.3.5 Access to all equipment, access doors, clean-up doors, and inspection doors is required to be furnished using permanently installed platforms, ladders, and stairs.

7.3.6 Belt conveyor data sheets shall be provided with the Proposal for each belt conveyor.

7.3.7 <u>Electrical</u>

a. Starting Equipment

The motors shall be capable of accelerating a fully loaded belt conveyor from rest to full speed.

The motors used on belt conveyors shall be capable of "soft start" operation in conjunction with a reduced voltage starter. Design motor torque shall be adequate to start fully loaded belt conveyors assuming a 20 percent voltage drop during inrush.

b. Starters

1. Motor starters shall be provided for all belt conveyor motors.

2. The starters shall be solid state reduced voltage type mounted in individual NEMA 12 enclosures. Control voltage of 220V ac shall be derived from the incoming 400V, 3 phase power. Control shall be via closed loop-linear timed regulation. A tachometer will be mounted on the conveyor motor to provide speed rate feedback to the starter.

3. The following protection shall be provided within the starter as a minimum:

   (a) Main fuses

   (b) Phase sequence sensing

   (c) Phase loss before start sensing (trip)

   (d) Undervoltage 65 to 75 percent nominal line voltage (trip)

   (e) Overload relays with standard heaters (trip)

4. Isolating contactors will be provided (by others) within remote MCC feeder compartments. The starter manufacturer shall provide an external signal (220V ac) to operate this contactor.

5. The starters shall be completely prewired and tested requiring only external power and control connections. All control wiring requiring external connection shall be terminated at terminal blocks rated 20A minimum. The terminal block shall be the ring lug type. An extra 20 percent spare terminals shall be provided. Internal wiring within the starter shall be SIS type, 14 AWG minimum.

6. Power and control cable entry will be from the top or side.

7. The starters shall be capable of accelerating a variably loaded conveyor motor from rest to full speed.

8. The starters shall be capable of operation on a 400V, 3 phase, 50 hertz grounded power system.

9. The starters shall be "design matched" to their respective motors.

10. All controls shall be mounted in NEMA 9 enclosures rated for Class II, Division 1, Group F environments.

11. Starters shall be as manufactured by General Electric or Westinghouse.

8.0 PERFORMANCE REQUIRMENTS

8.1 Each piece of equipment included in the Coal Handling System shall be guaranteed to deliver the specified capacities and rates when operating at the specified design conditions.

8.2 The Vendor shall guarantee that components furnished for the system, such as idlers, electric motors, motor starters, conveyor belting, shafting, bearings, pulleys, couplings, gear reducers, roller chain, sprockets, gates, gate operators, backstops, and feeders shall be designed and furnished to meet the full intent of the Specification and subsequent contract.

8.3 The Vendor shall guarantee that structures and steel platework shall be designed, fabricated, shipped, off loaded, furnished, and erected to meet the full intent of the Specification and subsequent contract for a period of 1 year following the equipment "in service" date.

8.4 In the event that the equipment and structures do not meet one or more of these guarantees, the Vendor shall, at his own expense, perform all modifications or replacements required to ensure guaranteed performance.

9.0 MATERIALS OF CONSTRUCTION

9.1 GENERAL

The following specified components, materials, and subsystems shall be supplied. If the Vendor takes exception to any component or material, he shall state the exact substitution in the Proposal. The term "or equal" is not acceptable. All materials furnished for this contract shall be new.

9.1.1 System Equipment and Components

9.1.2 Belt Conveyors

a. Belt conveyors shall be designed for operating capacity and shall include all components required, such as snub pulleys, vertical gravity take-ups, shafting, idlers, drive requirements, and belting. Belt conveyor design shall also consider material to be conveyed, relationship

with buildings, transmission lines, structures, galleries, cleaning of belts, loading conditions, accessibility, safety, duty life, and interfacing with existing equipment.

b. Belt conveyors shall operate on three equal roll, 35° troughed carrying idlers.

c. Belt conveyor head pulleys shall be a minimum 609mm (24") diameter and be provided with a snub pulley.

d. Belt conveyors shall be driven through roller chain and sprocket drives, except as noted.

e. Refer to the bid drawings for configurations of belt conveyors, system equipment, and structures.

f. Selection of all tension related conveyor components shall be based on running tensions using nominal rated horsepower.

g. Selected counterweight vertical and horizontal gravity take-ups shall be based on tensions as calculated, using actual horsepower required for conveying design tonnage.

i. The conveyor design calculations shall be submitted with the general arrangement and equipment drawings for the Owner's and Owner's Engineer's review.

9.2 EQUIPMENT AND COMPONENTS

9.2.1 Magnetic Separators

Two magnetic separators of the electromagnetic, suspended, self-cleaning and "in-line" type shall be furnished at the head end discharge of unloading conveyor and the head end discharge of the emergency conveyor. The magnetic separators shall be capable of removing ninety-five percent (95%) of all magnetic material down to 13mm (1/2") size in the coal stream leaving the head pulley. The magnets shall be of mild steel. The coil shall be immersed in a transformer-grade oil contained in a welded steel outer core. The case shall be fitted with an expansion tank and relief valve. The magnet shall be complete with mounting frame, head and tail pulleys, cleated rubber belt, bearings, reduction gear drive unit, dust hazardous drive motor (see Motor Specification Attachment 2C), coupling with guard and adjustable suspension hardware.

The magnetic separators shall be as manufactured by Eriez Magnetics, Erie, Pennsylvania 16512 or approved equal.

A silicon rectifier shall be supplied for the electromagnet with rectifier of sufficient capacity to supply the full power requirement of the separator. A control cubicle complete with all required equipment shall be provided to control the silicon rectifier and magnet. The Vendor shall furnish an adjustable tramp iron divider plate which shall be adjusted after trajectory of the coal and tramp iron has been determined under operating conditions. The tramp iron shall be discharged in a chute to grade outside for both separators.

9.2.2 Crushers

Provide two (2) ring-type coal crushers each with a minimum capacity of 728 tonnes (800 TPH). The crushers are to be located in the crusher house and will be uniformly fed by flat belt feeders. The crushers shall be capable of receiving 0" to 12" lumps of Lignite coal with a moisture range of twenty percent (20%) to thirty-five percent (35%) and weighing 55-65 lbs per cu. ft. Crushers shall be capable of producing 97% to 100% of 0mm-32mm (0"-1 1/4") coal size. Crushers shall be totally enclosed and access to the interior shall be by dust tight doors and movable panels.

Crushers shall be equipped with a bypass chute and gate within the casing, adjustable screen plates, be driven by direct coupled motors and be provided with tramp iron collection and removal features.

Each crusher is to be equipped with a hydraulic door opener for opening the rear quadrant of the crushers. Provide a common hydraulic power unit with valving arranged to select either crusher door for operation. Each crusher is to be complete with synchronized screw jacks for synchronized cage adjustment. Each crusher shall be driven by electric motor furnished by the Vendor.

Crushers shall be as manufactured by Pennsylvania Crusher Corp., Box 100, Broomall, Pennsylvania 19008 or approved equal.

9.2.3 Feeders, Flat Belt

Each feeder is to handle 0mm to 304mm (0" to 12") lignite coal on a 1219mm (48") and a 1524mm (60") wide flat belt at normal capacities of 725 tonnes (800 TPH) and 1450 tonnes (1600 TPH).

1. Provide 609mm (24") diameter drive and take-up pulleys mounted on suitable shafts of suitable size operating in roller bearings for the drive-pulley shaft and ball bearing take-ups having 304mm (12") adjustment for the take-up pulley shaft. Provide flat carrying impact idlers for the carrying strand of belt spaced 304mm (12") c/c and feeder table with suitable supports for head and take-up pulley assemblies. Provide an expanded metal guard for the take-up pulley. Provide a parallel shaft reducer with input shaft directly connected to a variable speed 6:1 ratio transmission unit by suitable flexible coupling. Variable speed transmission shall be equipped with motorized remote control. Constant speed shaft of variable speed transmission unit shall be driven through a suitable silent chain and sprocket drive by a motor. Provide guard for flexible coupling, oil-tight chain casing and a common steel base for mounting all units of the drive. The feeder drives are to be controlled locally and at the dumper or transfer house control panels. The variable speed drives shall be equipped with tachometers and remote readout meters calibrated in tons per hour.

   The Vendor shall furnish motors of suitable horsepower and speed and otherwise in accordance with the attached motor specifications and data sheets.

9.2.4 <u>Weigh Scales, Belt Conveyor, Electronic</u>

a. The Vendor shall furnish and erect belt weigh scales for the unloading conveyor and the two plant supply conveyors.

b. Scales locations are shown on the bid drawings and exact installation locations must be approved by the scale manufacturer to provide accurate weighing results.

c. Scales shall consist of the following components:

   1. Weigh carriage-integral with the conveyor table and special idlers as required by the manufacturer.

   2. Integrators

   3. Tension links

   4. Calibration and contact unit

   5. Calibration devices and tools including integrally mounted static test weights.

6. Ratemeters

7. Totalizers

8. 0-5V dc signal for transducer by others for remote flow rate indication.

d. The Vendor, in the Proposal, shall provide descriptive literature, model number, power requirements, dimensional outline drawing, and complete information of the weigh scales to be provided.

e. Scale accuracy shall be guaranteed to ±1/2 of 1 percent.

f. Weigh scales shall be as manufactured by:

Ramsey Engineering Company
1853 W. County Road C
St. Paul, Minnesota 55113

or:

Merrick Scale Manufacturing Company
180 Autumn Street
Passaic, New Jersey 07055

or:

Milltronics, Inc.
709 Stadium Drive East
Arlington, Texas 76011

9.2.5 Traveling Belt Tripper

Furnishing four (4) 914mm (36") tank type steel frame trippers as shown on the bid drawings. Trippers shall be motor propelled, manually controlled from either side or from the Transfer House control room and arranged for propulsion in either direction at a speed of 15M/sec. (50 FPM). Tripper pulleys shall be minimum of 914mm (36") diameter, crown face, welded steel with 13mm (1/2") plain rubber lagging vulcanized to the pulley face. Pulleys to be mounted on shafts of suitable size and operate in self-aligning roller bearing pillow blocks. The tripper frame shall be of rigid steel construction, suitably braced and mounted on minimum 20" diameter single flange cast or rolled steel wheels having two (2) 64mm (1/2") treads suitable for use on 38.5 Kg (85 lb) ASCE rails. The wheels shall be mounted on suitably sized, turned and polished shafts operating in bronze bushed rigid pillow blocks.
Tripper

wheels shall be keyed to the axles with two (2) keys at 90°. The keys shall be held by set screws having lock washers and nuts. For driving the tripper, the Vendor shall provide a roller chain and sprocket drive in oil-tight casing from each axle to a suitably sized drive shaft mounted in self-aligning roller bearing pillow blocks mounted to the tripper frame. Tripper drives shall be opposite hand and located outboard of the plant boiler.

Furnish a flexible steel coupling for connecting this drive shaft with the output shaft of a suitable right angle reducer. Input shaft of reducer shall be direct connected with the driving motor by a suitable flexible coupling. Provide guards for couplings and a common base for mounting motor and reducer. Provide a two-way discharge chute made up of 9.5mm (3/8") thick steel plate rigidly supported off the tripper frame. Provide a dust-tight inspection panel in the vertical portion of the discharge chutes in order to inspect and replace bottom plate liners. The dribble loading skirt under the discharge chute shall be constructed in accordance with the Drawings complete with rubber seals, clamp bars, dust curtains and rubber curtain seal at the exit end. Provide a 4.7mm (3/16") thick steel dust-tight head casing with 4.7mm (3/16") slitted rubber curtain with clamp bars above the belt where coal enters the casing and 6.3mm (1/4") slotted rubber seals below the belt with the necessary clamp bars and bolts. In the head casing provide a 609mm x 914mm (2-0" x 3'-0") inspection door hinged at one (1) side and the other side provided with latches for pulling down tight against self-adhering sponge rubber gasket around the opening.

Provide a 9.5mm (3/8") thick steel baffle (liner material) in head casing, hinged at the top and arranged with screw adjustment from the outside at the bottom to direct flow of coal.

Provide a 4.7mm (3/16") thick steel dribble chute under the head pulley to discharge dribble back to the belt. Where the return belt passes through the dribble chutes provide 4.7mm (3/16") thick rubber seals top and bottom with the necessary clamping bars and bolts for holding in position. Provide two (2) belt cleaners of the counterweighted type in back of the upper tripper pulley and rubber blade scraper on the lower. Provide an inspection door for adjusting and servicing the belt cleaners. Provide an adjustable conveyor deck at the rear of the tripper on which is to be mounted regular troughed idlers and one (1) training idler. Adjustment of the deck to be accomplished by means of a hydraulic jack and guide rod. The deck is to have an arrangement for locking in the adjusted position. Provide clips at rear for storing jack handle when

not in use. Provide ship ladders and crosswalk. Ship ladders to have 6.3mm (1/4") bent checkered plate treads with 25mm (1") flange on front edge. Ship ladders and crosswalk to be rigidly supported on the tripper frame. Provide 38mm (1 1/2") diameter pipe handrailings. Provide platforms on each side of the tripper with 6.3mm (1/4") checkered plate deck complete with toeplates, handrailing, access ladder and structural supports. Provide a remotely operated rail clamp each side of the tripper with spring closed snap type limit switch in dust and watertight enclosure arranged for control cutoff when either rail clamp is clamped to the rail. Provide the necessary 38.5 Kg (85 lb) ASCE rails for the tripper runway including the necessary cross channels for supporting same from conveyor table. All splices in rails shall be over supports. Stagger splices in adjacent rails. Provide trips at each end of tripper runway for operating the tripper travel limit switches. Provide wheel stops at each end of the tripper runway.

Provide (two [2] each way) spring closed snap type limit switches in dust and water-tight enclosures for normal and over-travel cutoff in each direction of the tripper travel.

All liner plates for the trippers shall be 13mm (1/2") thick. At the bottom of the discharge chute, provide steel plows. Plows shall be made up to 4.7mm (3/16") thick steel plate complete with inspection door and angle braces. That portion of each plow where coal passes through shall be lined with removable plates.

Provide 254mm (10") tripper trough floor channels complete with concrete anchors, welded steel grating, grating support angles and three (3) ply diaphragm rubber trough seals complete with clamp bars and bolts for each tripper.

Provide embedded supports under bearing seats for head, snub, take-up shafts and drive bases.

For propelling the trippers, furnish motors of suitable horsepower and speed with integrally mounted Stearns or equal disc type brakes.

9.2.6 Dribble Flight Conveyors

a. Dribble flight conveyors shall be made up of two (2) matched strands of No. 348 rivetless chains running on 246.6mm (5T-9.71") P.D. sprockets mounted on shafts of suitable size. The drive sprocket shafts shall be mounted in self-aligning ball bearing pillow blocks. The take-up shall be stationary in the take-up frames and the tail

sprockets will be bronze bushed and rotate on the shafts. Tail shafts are to be bored and counter-bored and provided with Alemite fittings for greasing the bronze bushed sprockets. Flight shall be 76mm x 63mm x 6.3mm (3" x 2 1/2" x 1/4") angles spaced 304mm (12") centers and mounted on angle brackets connected to the chains with extended coupling pins. The lower strands of the chains shall track on 9.5mm (3/8") thick (.30 -.40% carbon) steel wear bars mounted on the bottom plate of the conveyor trough. Trough bottom plates shall be 9.5mm (3/8") thick steel and shall be removable for replacement and for access to chain and flights. The top or return strands of chain shall be carried on steel angles having 9.5mm (3/8") thick (.30 - .40% carbon) steel wear bars. Side casing plates 7.9mm (5/16") thick shall be flanged at the bottom edge for attachment of the bottom plates.

b. For driving the dribble flight conveyors furnish a roller chain and sprocket drive in an oil-tight casing from head shaft to output shaft of the gear reducers. Provide suitable right angle gear reducers and flexible couplings for direct connection to the motors. Provide steel guards for the couplings and common steel bases rigidly braced for mounting all units of the drives.

c. Furnish motors of suitable horsepower and speed and otherwise in accordance with the attached motor specifications and motor data sheets.

d. Dribble flight conveyors shall be provided under all flat belt feeders.

9.2.7 Telescopic Chute and Hoist

Provide under the head end of the emergency stackout conveyor a telescopic chute. Chute sections shall be 6.3mm (1/4") steel plate and of suitable length fabricated in a manner to create as little binding as possible while the chute sections are being extended or retracted. Provide a hoist having sufficient capacity to raise and lower the chute at a speed of 3M/M (10 fpm). Provide a motor, coupling, right angle gear reducer, spur grear and pinion drive between the reducer output shaft and cable drum shaft, cable drums, rotating cam geared type limit switch, and slack cable switch at each drum all mounted on a common steel base of welded construction. The coupling between the motor and reducer is to be covered by a guard and the spur gears between the reducer output shaft and drum shaft are to be enclosed in an oiltight casing. The hoist machinery is to be located on the machine floor of the gallery support

tower. Provide the necessary wire rope, sheaves, rope clips, thimbles, etc., to make a complete and workable installation. Provide paddles at the bottom section of the chute which activate snap type limit switches thereby causing the hoist to raise the chute 609mm (2'-0") at one time as the coal raises. Provide a cable reel mounted on supports located on the underside of the gallery to carry the conductor cable to the paddle switches. Provide a snap type limit switch which will stop the hoist motor when normal upward limit of the telescopic chute is attained. Provide a snap type limit switch which will be used on the overflow chute and stop the belt conveyors when coal overflow occurs. Also provide a telescopic chute over-travel limit device which will consist of a pair of steel bars clamped to one of the chute hoisting cables which engage a system of levers which will activate a snap type limit switch, located on the gallery above the telescopic chute, which will stop the hoist motor and conveyors in event that the normal upward limit switch should fail to function. The hoist is to be controlled at the control room.

Provide an anemometer to be mounted on the gallery, above the telescopic chute which will sound an alarm in the control room so the telescopic chute can be raised to its highest position when it reaches a velocity, to be determined by the equipment manufacturer, when the telescopic should not be fully extended. The anemometer is to be complete with wind indicator which is to be mounted in the Purchaser's control room and any other accessories necessary for satisfactory operation.

9.2.8 Belting and Splice Materials

a. The Vendor shall furnish belting, splices, and splice materials for each belt conveyor. The Vendor will install and vulcanized splice belting on all belt conveyors.

b. Belt strength shall be based on 317.3 Kgs/cubic meter (65 lb per cubic foot) coal density. Minimum allowable working tensions shall be based on actual length of belt, angle of inclination idlers used, and maximum load carried. The Vendor shall furnish complete design and descriptive information regarding the basis of selection of belting, in the Proposal. All belting shall have a carcass of all polyester construction.

c. Actual belting lengths shall allow for vulcanized splicing and initial stretching.

d. All new belting shall be fire resistant rated.

Conveyor belting shall be as manufactured by:

The B. F. Goodrich Company
Industrial Products Division
Department 1707
500 South Main Street
Akron, Ohio 44318

or:

The Goodyear Tire and Rubber Company
1144 East Market Street
Conveyor Belt Marketing Department
Department 722 - Plant #2
Akron, Ohio 44316

9.2.9 Idlers

a. Carrying idlers shall be of the three equal steel rolls, 35° trough type. Rolls shall be a minimum of 127mm (5") diameter and have tapered roller bearings. Maximum spacing shall be as follows:

Normal Carrying	1.2M (4'-0") c/c
Impact Loading Areas	304mm (1'-0") c/c
Feeder Impacts	304mm (1'-0") c/c
Convex Vertical Curve Areas	533mm (1'-9") c/c

b. Return idlers shall be of the self-cleaning rubber disc type with massed end discs, a minimum diameter of 127mm (5"), a maximum spacing of 3M (10'-0"), and have tapered roller bearings.

c. Training idlers

Self-aligning positive-acting type training idlers shall be furnished for the carrying and the return run of each belt conveyor. Spacing for both belt runs shall be 30.48M (100'-0").

d. Transition Idlers

Adjustable three equal roll transition idlers shall be furnished at the head and tail ends of the belt conveyors.

e. Impact Idlers

At the loading points where the coal has an impact action on the belt, provide rubber-tread impact idlers 127mm (5") diameter, 3 roll, antifriction 35° trough, spaced at 304mm (12") centers. The impact idlers shall extend one-half the total length of the loading skirt.

f. Idlers shall be fitted with Alemite lubrication fittings accessible from the designated walkway side of the belt conveyors.

g. Idler frames or accessories shall not penetrate the deck plate and be of manufacturer's standard design.

h. The Vendor shall fully describe, in the Proposal, the method of aligning idlers and the supporting method of carrying and return idlers in the vertical curve areas.

i. The Vendor shall fully describe, in the Proposal, the use of any "special" idlers he may intend to use.

All idlers shall be as manufactured by

Continental Conveyor and Equipment Company
P.O. Box 400
Winfield, Alabama 33594.

or:

FMC Corporation
Material Handling Equipment Division
Homer City, Pennsylvania 15748

or:

Long-Airdox
Division of the Marmon Group
P.O. Box 351
Oak Hill, West Virginia 25901

9.2.10 Pulleys

a. All pulleys shall be designed for continuous heavy duty service, be of the pre-engineered type, and include pulley, pulley compression hubs, shafts, bearings, and pillow blocks. The Vendor shall provide with the Proposal his basis of pulley assembly design including pulley, pulley compression hubs, shaft, bearings, and pillow blocks.

b. The head pulleys shall be of welded steel construction, with crown face, and 13mm (1/2") thick herringbone rubber lagging vulcanized to the pulley face. The durometer of the rubber lagging shall be in accordance with the rubber manufacturer's recommendation for head pulleys.

c. The head end snub pulleys, vertical gravity take-up bend pulleys and drive and bend pulleys of belt conveyors shall be of welded steel construction, crown face with 13mm (1/2") thick plain rubber lagging vulcanized to the pulley face. The durometer of the rubber lagging shall be in accordance with the rubber manufacturer's recommendation for snub and bend pulleys.

d. Tail, take-up, and take-up turning pulleys shall be of welded construction with crown face. No lagging is required.

e. Return belt pulleys adjacent to tail pulleys (low tension) and subject to belt tension due to snubbing the belt shall be a minimum of 254mm (10") diameter heavy duty rubber covered steel roll mounted on suitable solid shafts and operating in self-aligning pillow block bearings.

f. All pulleys shall have taper-lock compression hubs, keyseated to their respective shafts, and have face widths of 965mm (38"), 1270mm (50"), and 1625mm (64").

g. Pulleys shall be manufactured by:

Continental Conveyor and Equipment Company
P.O. Box 400
Winfield, Alabama 33594.

or:

Van Gorp Corporation
Subsidiary of Emerson Electric Company
P.O. Box 123
Pella, Iowa 50219

or:

FMC Corporation
Material Handling Equipment Division
Homer City, Pennsylvania 15748

9.2.11 Backstops

a. Backstops shall be furnished for all belt conveyors to prevent reversal of conveyors in event of power failure. Backstops shall be equipped with torque arms and furnished suitably for electric motor stall torque.

b. Shaft mounted backstops shall be as manufactured by:

Marland One-Way Clutch Company
Division of Zurn Industries
La Grange, Illinois

or:

Stephens-Adamson, Inc.
P.O. Box 1567
Aurora, Illinois 60507

or:

Falk Corporation
Box 492
Milwaukee, Wisconsin 53201

and be sized in accordance with the manufacturer's recommendation.

9.2.12 Shafting

Shafts of proper size for belt conveyor pulleys, flop gates, and gearing shall be cold finished, turned, and polished stock and be keyseated. Keys and safety collars shall be provided. Shafts, solid or necked, shall be kept to a minimum number of sizes (diameters) to facilitate bearing interchangeability and maintenance.

The following criteria shall apply to design of shafting:

a. ANSI B105.1

b. Bending moment shock and fatigue factor of 1.5

c. Torque factor of 1.1

d. Maximum shaft deflection at hubs of 0.0015 radians

e. Maximum turndown ratio of $\frac{\text{major dia.}}{\text{minor dia.}} = 1.4$

f. Turndown fillet radii, minimum of 25 percent of the smaller diameter

9.2.13 Bearings

(See Attachment 2C for Motor Bearing requirements.)

All bearings shall operate in spherical roller-bearings, self-aligning pillow blocks of the split type with adapter mountings. All bearings shall be equipped with button-head Alemite Fittings A-1184 with extended grease piping where necessary for convenient access. Screw adjustment shall be provided for bearing pillow blocks.

Housing shall be of cast iron and shall be of split design with removable caps. Housing shall have end closures that provide for shaft thermal expansion.

Unless otherwise approved, all shaft pillow block bearings shall be have a minimum rating life of L-10 life of 100,000 hours. Of each pair of pillow blocks, one block shall be an expansion type and one fixed type, with both types having the same essential external dimensions. All pillow blocks shall, if assembled onto shafts, be factory lubricated before shipment.

Four-hole bases are required for all pillow blocks. All pillow blocks used for pulleys shall be positioned and retained by shims and positioning blocks. The number of pillow block sizes shall be minimized to reduce spare part requirements and the various quantities shall be summarized in the Proposal.

Bearings shall be as manufactured by:

FMC Corporation
Material Handling Equipment Division
Homer City, Pennsylvania 15478

or:

SKF Bearings Group
1100 First AVenue
King of Prussia, Pennsylvania 19406

or:

Falk Corporation
Box 492
Milwaukee, Wisconsin 53201

9.2.14 Couplings

a. Couplings shall be of the geared flexible type. For motors 200 kW and above, where sleeve bearings are required, limited end float flexible couplings are required. Couplings shall be bored and be keyseated to fit the coupled shafts.

b. The motor horsepower, torque, rpm, and reducer input or output rpm shall be the primary basis for selecting the required mechanical ratings of all high speed or low speed flexible couplings. Couplings shall be sized to include manufacturer's service factor for duty, speed, and load. In no case shall the couplings be sized at less capacity than the speed reducer.

c. Couplings shall be as manufactured by:

Falk Corporation
P.O. Box 492
Milwaukee, Wisconsin 53201

or:

FMC Corporation
Material Handling Equipment Division
Homer City, Pennsylvania 15748

9.2.15 Gear Reducers

Where space permits, reducers shall be parallel shaft of the herringbone or helical gear type, and totally enclosed. Where space is limited, a right angle reducer having spiral bevel and single helical gears shall be used. Reducers shall be selected with a service factor for 24 hour continuous operation per day. Drives shall have sufficient capacity to start a belt conveyor fully loaded under all conditions.

The reducer mechanical horsepower rating shall be equivalent to or greater than the product of the nominal motor horsepower and the proper service factor. The service factor used for sizing speed reducers shall be not less than 1.25.

Gear reducers, where additional cooling is required, shall be equipped with guarded fans.

Gear reducers shall have cut tooth gears, forced splash lubrication, high capacity roller bearings, and taconite type dust seals of approved design. Housing shall be of cast steel or weldments and shall have dowel pins. Housing shall be oil tight and provided with an oil filler cap, breather with weather protection, oil level sight gauge or dip stick and immersion type heater and integral thermostat to provide a 16°C (60°F) oil temperature. All dip sticks shall have the words "Full" and "Low" and "Add Oil" stamped at appropriate notches. All housing shall have removable inspection ports.

The thermal capacity of the reducer shall be equal to or greater than the nominal motor horsepower multiplied by the motor service factor of 1.15. The reducer shall be rated for maximum motor horsepower capability.

Reducers shall be commercially built and utilizing standard catalog ratios. Parts shall be fully interchangeable for units of the same size, ratio, and mechanical rating, regardless of the direction of shaft rotation.

Gear reducers shall be as manufactured by:

FMC Corporation
Material Handling Equipment Division
Homer City, Pennsylvania 15748

or:

Falk Corporation
P.O. Box 492
Milwaukee Wisconsin 53201

9.2.16 Roller Chains and Sprockets

a. Chains shall be steel bushed and of accurately finished all steel construction. Drive sprockets shall have Type B hubs and sprocket steel shall be flame-hardened. Driven sprockets shall be steel plate mounted on Type D hubs. Roller chains and sprockets shall operate in an oil bath.

b. Roller chains and sprockets shall be as manufactured by:

FMC Corporation
Material Handling Equipment Division
Homer City, Pennsylvania 15468

or:

Rexnord Inc.,
Conveyor & Power Transmission Division
4800 Mitchell Street
Milwaukee, Wisconsin 53214

or:

Falk Corporation
Box 492
Milwaukee, Wisconsin 53201

9.2.17 Chain Casings

Oil-tight chain casings shall be furnished for all roller chain and sprocket drives. Chain casings shall be 10 gauge thick steel sheets of welded construction and complete with drip shields, oil filler caps, oil level indicators, drain plugs, and supporting clips. Casings shall be flanged on the centerline of entering shafts for inspection purposes. The casings shall be designed so that the chain will not slap or wear against the casings. Where shafts enter the casing, thermoid seals shall be furnished and clamped on with a split metal clamping ring bolted to the casing. Flanges shall be bolted.

9.2.18 Lubrication and Lubricants

a. All equipment requiring grease lubrication shall be provided with A-1184 button head Alemite lubrication fittings.

b. Idler lubricating fittings shall be accessible from the designated walkway side of the belt conveyors.

c. Bearings shall be furnished with button head Alemite fittings with extended grease piping where necessary for access.

d. Roller chains and spockets shall be lubricated by the dip and splash method except as noted.

e. Gear reducers shall be lubricated by the dip and splash method.

f. The Vendor shall furnish all initial lubricants for shipping and storage. The Vendor and Erector shall furnish the Owner's Superintendent with a certified record of when lubricants are applied, a complete description, and quantities of the lubricants used. All lubrication and lubricants, other than for shipping and storage, shall be furnished by the Owner.

g. The Vendor shall describe, in the Proposal, any special lubrication systems he intends to furnish.

h. The Vendor shall provide, with the Operating Manuals, a lubrication schedule for all equipment furnished. The schedule shall include brand name, type, quantity, and frequency or rate of application of lubricants for all components in the system.

9.2.19 Belt Cleaners

Belt cleaners shall be of the multiple blade coil spring type with ratchet and handles for maintaining proper pressure against the belt and be furnished for each belt conveyor.

The multiple blades shall be observable, adjustable, and be changed out from the exterior of the head casing discharge hopper. Blades shall be tungsten carbide.

Location and application shall be approved by the manufacturer.

Belt cleaners shall be as manufactured by:

Materials Control, Inc. (Model 33)
One Smoke Tree Plaza, Suite 115
North Aurora, Illinois 60542

or:

Martin Engineering Company
U.S. Route 34
Neponset, Illinois 61345

9.2.20 Pulley Scrapers

Pulley scrapers shall be of the single blade type with adjustments each side for maintaining proper pressure against the pulley face.

9.2.21 Conveyor Take-Ups

Belt conveyors shall be equipped with vertical gravity take-ups. The take-ups shall consists of a sliding frame provided with two lifting rings operating on steel guide posts. The take-up shall include a counterweight box, counterweight material, and a weather cover.

Take-up travel for all belt conveyors shall be 3 percent of C_L (Horiz. Pulley Centers) plus 3M (10'-0").

The take-up counterweights shall be in the form of laminated steel plates or other suitable materials subject to approval of the Owner's Engineer. The material shall be designed so that 75 percent of the required weight may be fixed with the remaining 25 percent in adjustable increments. Provisions shall be made for 25 percent additional counterweight. Movable or rotating parts shall have Alemite grease fittings. The maximum weight of each adjustable plate shall be 50 pounds.

9.2.22 Gates

a. Flop gates shall be made up of two steel plates, each 13mm (1/2") thick, straddling the operating shaft at the bottom, and tapering to contact at the top. The operating shaft is to be mounted in bronze bushed bearings complete with accessible lubrication fittings. Gates are to be constructed as shown on the Bid Drawings.

The gates shall be lined on both sides with 13mm (1/2") thick tungsten liners fastened to the gate plates with 13mm (1/2") diameter machine screws having countersunk slotted heads.

b. Slide gates shall be furnished and installed as shown on the bid drawings. Slide gates shall be combination motorized and hand operated rack and pinion roller type. Each gate shall be arranged for remote motorized operation from the plant control room and local operation by a handwheel.

The slide gates shall have pinions, outer shells, and grease retainers for gate rollers and shall be of stainless steel construction.

Slide gates shall be as manufactured by PEBCO, Inc., P.O. Box 7506, Paducah, Kentucky, 42001.

9.2.23 Gate Operators

a. The Vendor shall furnish and erect gate operators for flop gates.

b. The Vendor shall furnish and erect gate operators for the rack and pinion slide gates.

c. Flop gates and operators shall be designed to rotate under a head of moving coal flow.

d. Slide gates and operators shall be designed to operate under a standing head of coal.

e. All flop and slide gates shall be capable of local or remote operation.

f. All flop and slide gate operators shall be provided with limit switches for remote position indication and control interlocks.

g. The Vendor shall furnish and erect all operating assemblies, cylinder covers, and mounting devices for proper installation, operation, and maintenance.

All flop and slide gate operators shall be as manufactured by the Sheffer Corporation, Cincinnati, Ohio 45242, and be of their "POWR-PAK" Series or approved equal.

9.2.24 Common Drive Bases

A common drive base of welded steel, rigidly braced and of suitable dimensions, shall be furnished for each drive unit. No component, mounted on the drive base shall overhang its external dimensions. Drive base shall be through bolted to the floor framing system or structural support system.

9.2.25 Conveyor Covers and Cover Supports

a. Curved galvanized steel, 16 gauge (AWG), corrugated covers shall be provided. Corrugations of the covers and supports shall be perpendicular to the centerline of the belt conveyors.

b. The segmented conveyor covers shall be attached to and supported by a curved corrugated band attached to the conveyor table with 9.5mm (3/8") diameter galvanized machine bolts through a piece of galvanized angle.

c. The conveyor covers shall be open on both sides to allow servicing the idlers and washing down of the belt conveyors.

d. The conveyor covers shall be furnished with galvanized hinges, snap locks (quick release type), and safety chains.

e. Curved 6.3mm (1/4") thick steel transition pieces, to mate with the conveyor covers, shall be furnished at the belt conveyor head, tail, and intermediate areas.

9.2.26 Machinery Fasteners

The Vendor shall furnish and install all fasteners associated for new equipment/machinery items and shall include bolts, shim packs, alignment devices, washers, nuts, vibration dampering materials, seals and sealing material, and all other items required for installation.

9.2.27 Conveyor Tables

Belt conveyor tables shall be made up of suitable channel stringers with a No. 12 gauge (AWG) deck plate across the top flanges. The exterior portion of belt conveyors shall have the stiffened deck plate applied to the top chord of the integral gallery trusses. Deck plates shall be stiffened at approximately 1.2M (4'-0") centers with cross struts of angle or channel having ends welded to channel stringers or gallery top chord members. Where joints occur in the table, the

uphill deck plates shall be crimped and lapped 100mm (4") over the downhill plate. Suitable angle posts for supporting the table, from tail pulley to head pulley, shall be furnished. On the designated walkway side of the table, extend the table posts to support a single line pipe handrailing along side of the table.

9.2.28 Chutes, Hoppers, Casings (Dust Hoods), Skirts, and Liners

a. Sealing Compound

Permagum sealing compound as manufactured by Pressitite Products Division of Interchemical Corporation, St. Louis, Missouri, shall be used for sealing all shop or field bolted or clamped joints in such items as hoppers, chutes, casings, and loading skirts. The sealing compound shall be provided by the Vendor and shall be applied in shop or field depending on whether the piece is shipped assembled or disassembled. The sealing compound shall be applied in coatings sufficiently heavy to obtain a positive squeezing action when bolts or clamps are tightened and the excess is to be scraped off flush with the flanges sealed.

b. Head pulley casings (dust hoods) and discharge hopper head pulley casings, unless otherwise noted, shall be of No. 10 gauge (AWG) steel plate properly stiffened by means of steel angles or bars. The casings shall be made dust-tight by continuously welding all shop joints and by providing a coating of sealing compound in all bolted and clamped joints when assembled in the shop or field. Spacing of fasteners shall not exceed 76mm (3") centers. A dust-tight inspection door shall be provided in the casings at the most convenient location. Where the belt enters the head pulley casing, provide a 4.7mm (3/16") thick slitted black all gum rubber curtain with suitable clamp bars and bolts above the belt and 6.3mm (1/4") thick black rubber seal strips, clamp bars, and bolts for the return belt. Where the conveyor is skirted between the head casing and the building wall line the rubber curtain is required on the steel plate partition.

Head pulley discharge hoppers shall be of all welded construction. Sloping hopper plates over which coal flows shall be 13mm (1/2") thick steel. All other plates shall 9.5mm (3/8") thick steel plate. Adjustable deflector plates shall be provided to direct coal to the loading skirt below as required by coal directional flow and central loading of belt conveyors. Deflector plates shall be made of 13mm (1/2") thick alloy steel plates.

c. Chutes

Bottom plates of all chutes shall be 9.5mm (3/8") thick steel plate. Side plates shall be 9.5mm (3/8") thick steel plate with bent plate or angle flanges. Top plates shall be 4.7mm (3/16") thick steel plate. All corners of chute liners shall be internally rounded at a minimum radius of 76mm (3"). Bottom flange fasteners shall be 152mm (6") c/c and top flange fasteners shall be 76mm (3") c/c. Chutes shall be provided with chute plug mounting devices.

d. Angle of Sloping Chutes or Hoppers

The angle of sloping chutes or hoppers shall be a minimum of 65 degrees from the horizontal. Chute valley angles shall be 55 degrees minimum. Slope angles shown on the bid drawings shall be adhered to.

e. Vertical (or High Angle) Chutes

Vertical chutes shall be 7.9mm (5/16") thick steel plates, shop welded continuously at the corners. Interior baffles (rock shelves) shall be provided where required to eliminate damage to belts, chutes, or liners due to coal falling a long vertical distance.

f. Loading Skirts

Loading skirt lengths shall be provided as shown on the bid drawings. The loading skirts at the tail ends of belt conveyors shall be provided with an adjustable bent liner plate 3M (10'-0") long from the point of initial material contact with the belt and the remainder with straight liners.

The skirts on belt conveyors shall be provided with adjustable plows to guide coal entering into the uphill skirted areas.

Side plates of skirts shall be 9.5mm (3/8") thick steel plate. Top edges of skirts shall be provided with bent or continuously welded angle flanges for connection of top cover plates. Top cover plates shall be 4.7mm (3/16") thick steel plate. At the lower inside edges of the skirt plates, provide 13mm (1/2") thick alloy steel liner plates as shown on bid Drawings.

Provide two canvas dust curtains inside all loading skirts.

Slitted black all gum rubber curtains, 4.7mm (3/16") thick, shall be provided at the discharge end of all loading skirts. Curtains shall be provided with clamp bars and bolts.

On all loading skirts, provide adjustable rubber seals, backing plates, and accessories. Skirt seals shall be as shown on the bid drawings.

Durometer of black all gum rubber curtains shall be 40-60 and skirt seals shall be 85+5.

g. Liners

The Coal Handling system incorporates two types of wear liners, 450 minimum Brinell (ASTM 514) alloy steel plates and 6.3mm (1/4") Tungsten-clad on 6.3mm (1/4") carbon steel plates. The location, extent, material, and thickness shall be shown on the Vendor's design drawings. Liners are to be completely detailed and piecemarked for ease of replacement. The size of any wear liner plate is not to exceed 914mm x 914mm. All liners are to be shop installed.

13mm (1/2") Tungsten - Clad shall be furnished for the following:

1. Flop gates - both sides

9.5mm (3/8") 450 Brinell Alloy shall be furnished for the following:

1. Chute side surfaces
2. Loading skirt side surfaces
3. Vertical chute surfaces - all sides
4. Transition pieces - all sides
5. Chute bottom surfaces
6. Sliding surfaces of hoppers
7. Any high wear area

8. Adjustable deflector plates

The Vendor shall provide a separate per square foot unit price for tungsten clad lining materials in the high wear areas. This unit price should include the credit for deletion of the 9.5mm (3/8") 450 brinell alloy for the areas involved.

Wear liner plates shall be attached to chutes, hoppers, skirts, etc., by means of 16mm (5/8") diameter slotted countersunk stainless steel flat head bolts spaced not over 609mm (2'-0") centers in any direction.

16mm (5/8") diameter slotted countersunk stainless steel flat head machine screws, spaced not over 609mm (2'-0") center in either direction, shall be used to attached alloy steel liners to gate plates.

For details of liners for chutes, hoppers, casings, gates, and skirts see bid drawings.

9.2.29 Doors

a. Inspection, Cleanup, and Access Doors

Doors in hoppers, chutes. and casings used for inspection, access, and for adjusting internal equipment shall be of the same thickness steel plate as used in the item to which they are attached. All doors shall be made dust-tight with 6.3mm (1/4") thick sponge rubber cemented around the door opening. Doors are to be hinged with Stanley or equal 100mm x 100mm (4" x 4") heavy blank hinges. For clamping the doors dust-tight, furnish two handles per door.

All doors in vertical or inclined planes are to swing horizontally and have a minimum swing of 90 degrees.

b. Special Steel Plate Door

A special hoist door of stiffened 10 gauge (AWG) steel plate are to be provided as shown on bid drawings for equipment removal from the transfer tower and crusher house upper areas.

9.2.30 Guards

a. Couplings

All couplings shall be furnished with removable solid steel No. 10 gauge (AWG) steel guards. Guards are to cover the adjacent rotating shafts as well as the coupling.

b. Tail Pulleys

All tail pulleys shall be furnished with removable guards made of expanded metal welded to steel angle frames. The expanded metal shall be No. 13 gauge (AWG) with 13mm (1/2") maximum openings.

c. Vertical Gravity Take-Ups

Vertical gravity take-ups shall be provided with a 1828mm (6'-0") high guard to prevent walking under or coming in contact with the suspended pulleys. The guard shall be made up of expanded metal welded to steel angle frames on four or appropriate number of sides. The panels shall stop 304mm (1'-0") short of the floor or grade for cleaning. One panel paralleling the pulley shall be removable. The expanded metal shall be No. 13 gauge (AWG) with 13mm (1/2") maximum openings.

d. Open Pulleys

Guards shall be provided on both sides of belt conveyors that have open pulleys. This shall include unenclosed head, tail, bend, take-up, special drive, or turning pulleys.

e. Impact Idler Areas

On belt conveyors, in the impact idler areas, expanded metal guards on steel frames are required on both sides. These guards shall be of the slip in type for cleaning purposes. These guards shall extend from the deck plate to the top area of the belt idler rolls and be of the Vendor's design.

f. Miscellaneous Guards

In addition to the above mentioned guards, items such as wire rope, cables, sheaves, return idlers, and belts accessible from floors, open gearing and moving machine

parts that may be a hazard to personnel operating the equipment shall be provided with guard protection.

g. Vehicle guards shall be provided at the transfer tower, crusher house and as shown on the Engineering Drawings.

9.2.31 Steel Plate Partitions and Belt Seals

Steel plate partitions shall be furnished for the transfer tower and the crusher house walls at the girt lines.

Partitions shall be made up of No. 11 gauge (AWG) steel plate bolted to suitable channel or angle framing. Partitions shall be complete with 4.7mm (3/16") thick black all gum rubber slitted curtains, 13mm (1/2") adjustable black all gum rubber seals with slotted holes and clamp bars for sealing both strands of the conveyor belt. The partitions shall incorporate channel door frames and steel bar door stops.

9.3 STRUCTURAL

a. General

1. All built-up members such as gallery trusses, box girders, shall be shipped in sections as large as shipping clearances will permit.

2. Any structural steel members exposed to weather, such as gallery bents, shall have drainage holes or seal welded deflector plates at points where the possibility of trapping water is evident.

3. In case of conflict between these Specifications and AISC specifications referred to previously, this Specification shall govern.

4. All structural details and layouts shown on the bid drawings shall be adhered to in the design of the structures covered by this Specification.

5. Standard structural details shown on the bid drawings and in Attachment 2B shall be strictly adhered to.

6. Fabricated structural steel shall be subject to nondestructive weld testing at the Owner's option should evidence of substandard welding be found. Testing will be done in the Vendor's shop and at the Vendor's expense.

7. The use of structural tube or pipe is not preferred and shall be subject to the approval of the Owner's Engineer.

8. Roof steel framing systems shall slope to accommodate roof drainage. Slope shall be 50mm x 304mm (2" in 12").

9. The use of long span-open web joists shall not be used in wall, floor, or roofing systems.

10. For painting see Article 14.

b. Structural Steel

Only new structural steel meeting the requirements of the American Society for Testings and Materials Designation A36-81a shall be used in the performance of this work. If, for any reason, the Vendor intends to use other grades of structural steel, he shall so state in the Proposal and list each ASTM designation.

c. Structural Steel Connections

1. Shop assembled joints may be fabricated by using either welded connections or high strength steel bolted connections subject to the approval of the Owner's Engineer. Field connections shall be made with high strength bolts unless otherwise indicated on the Engineering Drawings or in this Specification.

2. All connections are subject to review by the Owner's Engineer.

3. All welding shall be in accordance with AWS D1.1.

4. The design of all bolted connections shall be based on the use of high strength steel bolts, nuts, washers, and direct tension indicators meeting the requirements of ASTM A-325.

5. Minimum standard connections, as specified in Attachment 2E shall be used, except where end shear reactions, axial loads, or both are shown on the Vendor's Engineering Drawings. In such case it shall be the responsibility of the Vendor to design, detail, and furnish a connection adequate for these noted loads.

6. Friction type connections shall be used in bolted joints unless otherwise noted in this Specification or on the Engineering Drawings.

7. The Vendor may use bearing type connections for the following, subject to the written approval of the Owner's Engineer. The locations of all bearing type connections shall be clearly shown on the Vendor's Detail and Erection Drawings.

   a) Usually large end reactions.

   b) Solution of special clearance problems.

   c) Only bearing type bolted connections conforming to the requirements of the reference specifications will be permitted in joints connecting members that have been galvanized. Galvanized bolts, nuts, and washers shall be used in galvanized construction.

8. Direct tension indicators shall be used with all shop bolted connections conforming to ASTM A-325.

9. Heavy semi-finished hexagon bolts, nuts, direct tension indicator, and one hardened washer (flat or beveled as required) for each bolt in accordance with the requirements of ASTM A-325 shall be furnished for all field connections plus an adequate percentage to cover waste.

10. Bolts, nuts, and washers, for attaching handrailing, in accordance with ASTM A307, shall be for all field connections plus an adequate percentage to cover waste.

11. High strength steel bolts furnished by the Vendor may be used as fitting up bolts.

12. Connections to existing steel shall be of the adjustable type, either welded or bolted.

13. Electrodes for Shielded Metal Arc Welding (SMAW) welding will be E-70XX, low hydrogen unless otherwise noted on the Engineering Drawings.

d. Loads

1. All structures shall be designed as follows: Wind load shall be determined by ANSI A58.1 for components and cladding the location of the plant site. Earthquake considerations shall be in accordance with the latest edition of the Uniform Building Code, Seismic Zone 1 and an importance factor "I" of 1.5 shall be used in the design of structures.

2. Individual members of the structures shall be designed for loading combinations in accordance with:

   ANSI A58.1 - Section 2. Combination of Loads (except the 1/3 increase in AISC allowable stress is allowed only for the load combination of dead load plus wind load or seismic load)

3. Chord members of gallery trusses shall be designed for combined bending, axial loads, conduit, tray, and piping support dead and live loads (top chords extended).

4. Steel gallery bents shall be vertical where possible and where battered have a maximum slope of 50mm:304mm (2:12).

5. The following dead and live loads shall be used in designing structures.

   a) Dead Loads

Pipe, cable trays and conduits on integral galleries	148.8 Kgs/meter (100 lbs per lin ft) 74.4 Kgs/meter (50 lbs per lin ft) To be applied to each side.
36" belt conveyor including carrying idlers, belting, return idlers, stringers, deck plate and support to the floor or walkway	245.5 Kgs/meter (165 lbs per lin ft)

48" belt conveyor including carrying idlers, belting, return idlers, stringers, deck plate and support to the floor or walkway	267.8 Kgs/meter (180 lbs per lin ft)
Structural steel floor and roof framing	As Calculated
Chutework including liners and support steel and filled completely with coal	As Calculated
Equipment concentrated	As furnished loads
Exterior Siding and Girt System	48.82 Kgs/sq meter (10 lbs per sq ft)

b) Live Loads (includes impact loads)

Coal on 36" belt	98.2 Kgs/meter (66 lbs per lin ft conveyor)
Coal on 48" belt	193.5 Kgs/meter (130 lbs per lin ft conveyor)
Grating floors, walkways, and platforms	488 Kgs/sq meter (100 lbs per sq ft)
Checkered plate floors	976 Kgs/sq meter (200 lbs per sq ft)
Wind	Per ANSI, A58.1 for components and cladding

A. Classification Category III

B. Basic Wind Speed = 128.7 Kms/hr (80 mph)

	C. Exposure C
	D. Pressure Coefficients
Roofs	293 Kgs/sq meter (60 lbs per sq ft)
Coal in Chutework	317.3 Kgs/cubic meter (65 lbs per cu ft)

e. Maximum Clear Spans

1. Transfer tower roofing siding - 1524mm (5'-0") for wall girts and roof purlins.

2. Roofs - 2.1M (7'-0")

3. Beam spacing under grating floors and platforms - 1371mm (4'-6").

f. Grouting

The Vendor or his Erector will grout as required under all structural members after they are set, shimmed, leveled, and plumbed. Shimming instructions shall be supplied by Vendor.

g. Camber

The Vendor shall fully describe, in the Proposal, camber design for the gallery spans associated with 914mm (36") and 1219mm (48") belt conveyors.

h. Expansion

The Vendor shall fully describe, in the Proposal, the design for thermal expansion and contraction of the integral type gallery spans associated with the belt conveyors. Specific materials for this application are to be described. The Vendor shall designate the anchor and expansion ends.

i. Head and Tail End Supports

Head and tail end supports of belt conveyors shall be made up of structural shapes and be of such a configuration as to support all loads imposed to the supports,

allow access to mechanical elements, to make adjustments and provide for cleaning around, under, and over the head and tail pulleys.

Supports shall be mounted to steel floor framing systems, below the grating or checkered plate.

9.3.1 Embedded Structural Steel

The Vendor is to furnish all structural steel, structural platework, pipe sleeves, and anchor bolts associated with the general scope of supply. There items are to considered "Early Delivery Items" and expedited in design and delivery for installation by others.

9.3.2 Hopper Gratings and Grating Support Beams

The Vendor is to design and detail steel grating over the receiving hoppers and the emergency reclaiming hopper openings. Grating shall be of welded construction having longitudinal (bearing) and cross (spacer) bars with 304mm (1'-0") clear openings in both directions. Bars are not to be dove tailed for jointing. The Vendor shall design and detail the beams for supporting the grating to withstand the load of a D9 Caterpillar tractor 34,000,000 Kgs (75,000 lbs) with Balderson blade attached plus 50 percent impact for the emergency reclaiming hopper. The beams shall bear in the concrete hopper side wall "through" pockets. The Owner shall grout these pockets full during initial construction. See bid drawings for details.

9.3.3 Anchor Bolts

a. The Vendor shall furnish all anchor bolts, to be embedded in concrete and installed by others. The anchor bolts shall be provided with pipe sleeves, anchor plates, nuts, and washers, all taped to the threads and for their length.

b. The Vendor is to provide anchor bolt drawings, showing location, thread length, and elevations of all anchor bolts.

9.3.4 Expansion Anchors

The Vendor shall furnish and install expansion anchors to support the conveyor table legs in the concrete tunnels. Allowance for length shall be made for a minimum of 51mm (2") (of grout also furnished and installed by the Vendor.

9.3.5 Handrailing

a. All handrailing shall be 32mm (1 1/4") standard black iron pipe and meet the requirements of ASTM Specification A53-80 and the typical details included in Attachment 2B.

b. Handrailing shall be fabricated using welded construction. Welds shall be ground smooth to present a neat and workmanlike appearance. Sharpness of mitered corners shall be relieved by grinding.

c. Handrail shall be shop fabricated in sections readily handled in the field. Details and typical handrail connections shall be made in accordance with the typical details.

d. Handrailing shall be supplied on both sides of all stairs, attached to the stringers unless noted on the drawings.

e. The Vendor shall supply all items necessary for the erection of the handrail.

f. Erected handrail shall be plumb within 13mm (1/2") from top rail to floor line and shall not be out of plumb more than 6.3mm (1/4") at any one point nor more than 13mm in 7.3M (1/2" in 24').

g. Single handrails are to be provided on both sides of belt conveyor walkways on galleries, in tunnels, unless otherwise noted on the drawings and herein.

h. For painting see Article 14.

9.3.6 Steel Floor Grating and Grating Stair Treads

a. Grating and stair treads shall be of the rectangular type and consist of all welded galvanized steel construction without preliminary slotting of bearing bars and be serrated.

b. Floor, walkway, and platform grating shall be 32mm (1 1/4") thick and stair treads 25mm (1") thick. All stair treads shall have cast iron abrasive nosing subject to the Owner's Engineer's approval, furnished for each tread and at the head of each stair run.

c. Grating bearing bars shall be speced 4.7mm (1 3/16") on centers unless otherwise specified.

d. All grating, stair treads, fasteners, and miscellaneous attachments shall be hot-dip galvanized after fabrication has been completed.

e. 6.3mm (1/4") toeplates shall project 100mm (4") above the floorline and be furnished at the outer edges of all walks as required by structural floor design and floor grating details shown on the bid drawings and in Attachment 2D. Toeplates shall be attached to structural steel or grating edges only. Toeplates shall not be attached to handrailing posts.

f. One edge of each grating section shall be banded to prevent telescoping of sections.

g. Bearing bars and cross bars in adjoining sections shall lineup.

h. Fasteners for removable sections shall be arranged for removal from the top.

i. Floor grating shall be fastened to structural steel floor framing by stitch welding, except removable panels shall be fastened with mechanical fasteners. Welds shall be covered by "Galvoweld."

j. The minimum allowable design load for grating platform shall be 976 Kgs/sq meter (200 pounds per square foot).

k. The maximum allowable full load deflection shall not exceed 1/200 of the span for grating platforms.

l. Grating stair treads shall be capable of supporting a single load of 181 Kgs (400 pounds) at the center of the span distributed transversely over an 203mm (8") width of tread. The deflection at this loading shall not be more than 1/200 of the span.

m. Grating areas are not to be used for tie off or rigging support unless approved by the Owner's Superintendent.

9.3.7 Checkered Floor Plate

The Vendor shall furnish and erect four-way steel checkered floor plate in the following locations:

(LATER)

The Vendor shall provide 100mm high (4") toeplates and trim steel at floor levels, in the transfer house and crusher house, to provide a siding connection surface.

The Vendor shall detail, shop paint, field clean, and field paint all checkered plate after installation, see Article 14.

9.3.8 Stair and Ladders, with and without Safety Cages

a. The Vendor shall furnish and erect stairs and ladders as shown on the bid drawings and any required for access to equipment.

b. See Attachment 2B for required details.

c. See Article 14 for painting.

9.3.9 Access Platforms and Walkways

a. The Vendor shall furnish and erect all access, service platforms, and walkways as shown on the bid drawings.

b. The Vendor shall furnish and erect any access and/or walkway platform for access and maintenance to all equipment.

9.3.10 Roof Framing and Purlins

The Vendor shall furnish and erect roof framing and channel purlins for the transfer house and crusher house. The purlins and edge trim steel shall be designed for full bearing of the metal roofing.

9.3.11 Wall Framing, Girts, and Sag Rods

The Vendor shall furnish and erect wall framing for the transfer tower and crusher house. Framing shall consist of extended floors and channels girts to accept the siding. Channel girts shall be supported with 13mm (1/2") diameter sag rods, threaded at both ends and with 2 nuts at both ends to lock the connections after leveling the girts.

9.3.12 Hoist Beams

The Vendor shall furnish and erect equipment removal hoist beams in the following locations:

a. Transfer Tower

b. Crusher House

c. Receiving Hopper

The equipment removal hoist beams shall be designed to lift the heaviest piece of equipment plus 25 percent overload. The hoist beams shall be located over the major portion of the head end equipment.

Hoist beams shall be American Standard S-Shapes with maximum radii as required by the trolley and hoist to be installed on the hoist beam. All hoist beams will be equipped with trolley stops at both ends.

9.3.13 Wind Bracing

The Vendor shall furnish and erect wind bracing at the following locations:

a. Transfer Tower

b. Crusher House

9.3.14 Painting

For painting see Paragraph 14.0.

9.4 ELECTRICAL

All components, devices, and miscellaneous materials shall be furnished and delivered by Vendor for installation and wiring into the Modifications and Additions by Others.

9.4.1 Speed Switches

a. Zero speed detection of all belt feeders and conveyors shall be provided under this contract using ferrous detector and switch devices and solid state motion detector combination package.

b. Sensing device shall be as manufactured by PYOT-Boone Slip Sequence Control Model 404A in NEMA 9 enclosures. The Vendor shall provide ferrous activator, activator drive facilities, mounting hardware, and interfacing information to provide the proper GO switch with the conveyor and feeder drives.

c. Motion detector shall be solid state, base mounted, rated for 220 volt ac, 50 hertz input, 0.06 to 10 second timing

range, and relay type output having 1 N.O. and 1 N.C. contacts electrically isolated.

9.4.2 Emergency Stop Switches, Cable Operated

Crouse Hinds, Model AFU, emergency stop switch shall be provided at 30.4m (100') centers and shall include the required clamps and wire rope at 812mm (2'-8") from the walkway or grade. The wire rope shall be constructed to the following minimum criteria: stainless steel, vinyl coated, 3.2mm to 4.7mm (1/8" to 3/16"), brake strength 1760#, yellow color.

9.4.3 Belt Alignment Switches

Switches shall be provided by Crouse-Hinds. Belt Alignment switches shall be provided at the head and tail-end of each belt feeder and conveyor.

9.4.4 Chute Plugged Switches

a. Switches shall be Ramsey Engineering Company tilt switches. Chute plug switches shall be provided for each potential plug area as indicated on the coal flow diagram.

9.4.5 Hopper Level Switches - Control Unit

a. Level switch shall be Type CL-10DJ Dynatrol Detector as manufactured by Automation Products, Inc. with stainless steel media contact parts, complete with type EC-501A control unit per manufacturer's Bulletin No. DJ69. Switch and controller unit shall be approved for Class II, Division 1, Group F atmosphere.

b. Switch and control will be used for high level control function. Service conditions shall be coal at ambient temperature having a bulk density of 801 Kgs/cubic meter (50 lbs/cu ft). One detector and controller shall be provided for each area.

9.4.6 The Vendor shall state, in the Proposal, the quantity of each switch type to be furnished.

9.4.7 For electric motor design requirements see Article 7.

9.4.8 For electric motor specifications see Attachment 2C.

9.4.9 Limit Switches

All flop and slide gate operators shall be provided with position switches and shall be NEMA 9, Class II, Division 1, Group F.

9.5 ARCHITECTURAL

9.5.1 Roofing

a. The Vendor shall furnish and erect roofing for the transfer tower and crusher house.

Roofing shall be .032" (AWG) thick, plain mill finish, V-Beam aluminum panels.

b. The Vendor shall flash roofing to siding areas and around all door and louver openings.

9.5.2 Siding

The Vendor shall furnish and erect siding for the transfer tower and the crusher house.

Siding shall be .032" (AWG) thick, plain mill finish, contour aluminum panels.

Bituminous paint or equal shall be applied to steel surfaces in contact with aluminum surfaces to prevent dissimiliar metal corrosion.

9.5.3 All roofing and siding fasteners, closure strips, and fasteners shall be furnished and installed per the manufacturer's recommendations.

9.5.4 All roofing and siding shall be as manufactured by Elwin G. Smith or equal.

9.5.5 Doors

The Vendor shall furnish and erect all doors. Doors are required as shown on the bid drawings.

10.0 FABRICATION AND ASSEMBLY REQUIREMENTS

10.1 For structural steel refer to Specification S-2.

11.0 INSTALLATION REQUIREMENTS

11.1 CONVEYOR BELTING PROCEDURE

(LATER)

11.2 BOLTED STRUCTURAL CONNECTIONS USING LOAD INDICATOR WASHERS

The Vendor shall furnish direct tension indicators to be used with all high strength bolts.

11.2.1 The following procedures shall be followed in the use of the indicators:

a. Direct Tension Indicator Placed Under the Bolthead and the Nut is Turned

The direct tension indicator shall be placed on the bolt. The indicator protrusions shall face the bolthead. The bolt assembly shall be inserted into the connection. A round hardened washer shall be placed on the bolt and the nut installed. The nut shall be tightened until the direct tension indicator gap is compressed to 15 mils (0.015").

b. Direct Tension Indicator Placed Under the Bolthead and the Bolthead is Turned

The round hardened washer shall be placed on the bolt. The direct tension indicator shall be placed on the bolt. The indicator protrusions shall face the bolthead. The bolt assembly shall be inserted into the connection. The nut shall be installed. The bolthead shall be turned until the direct tension indicator gap is compressed to 15 mils (0.005").

c. Direct Tension Indicator Placed Under the Nut and the Bolthead Turned

A round hardened washer shall be placed on the bolt. The bolt assembly shall be inserted into the connection. The direct tension indicator shall be placed on the bolt. The indicator protrusions shall face the nut. A nut hardened washer shall be placed on the bolt. The nut shall be installed. The bolthead shall be turned until the direct tension indicator gap is compressed to 15 mils (0.015").

d. Direct Tension Indicator Placed Under the Nut and the Nut Turned

The bolt shall be inserted into the connection. The direct tension indicator shall be placed on the bolt. The indicator protrusions shall face the nut. A round hardened washer shall be placed on the bolt. The nut shall be installed. The nut shall be turned until the direct tension indicator gap is compressed to 15 mils (0.005").

11.2.2 Sufficient bolts in the connection shall be "snugged" to draw the mating surfaces into contact. All fasteners shall be tightened until the gap on the face of the direct tension indicator is reduced to the amount specified.

11.2.3 Tightening shall progress from the most rigid part of the connection out to the free edges.

11.2.4 Bolts shall not be forced into holes.

11.2.5 Holes that must be enlarged to admit bolts shall be reamed.

11.2.6 After being tightened, high-strength bolts shall not be reused.

11.2.7 After being compressed, the direct tension indicators shall not be reused.

11.2.8 All high strength steel bolted connections shall be inspected by the Vendor in accordance with Section 13.7 of this Specification.

12.0 PERSONNEL REQUIREMENTS

12.1 All welding shall be done by welders qualified in accordance with the requirements of the ASME Boiler and Pressure Vessel Code, Section IX (1980). The balance of all shop and field welding shall be done by welders qualified in accordance with the requirements of AWS "Standard Qualification Procedure."

13.0 INSPECTIONS AND TESTS

13.1 GENERAL

13.1.1 The Owner or Owner's Engineer shall be permitted access to the Vendor's facilities and facilities of Subvendors for expediting, witnessing tests, inspection purposes, and for verifying compliance with contract documents.

13.1.2 The Owner reserves the right to inspect the materials used and the workmanship. Such inspections shall not relieve the Vendor of his obligation to furnish the items in accordance with this Specification. The Vendor shall notify the Owner's Engineer at least 5 days in advance of testing exclusive of holidays and weekends to allow arrangements to be made in the event this option is exercised.

13.1.3 The Vendor shall cooperate with the Inspector and shall permit him access to all parts of the Work.

13.1.4 When requested, the Vendor shall notify the Owner when the various parts are ready for inspection.

13.2 AUTHORITY TO REJECT

The Inspector will have authority to reject all materials and workmanship not conforming to the Engineering Drawings and this Specification. Any time defective or misfabricated material is found during the progress of the Work, the Vendor shall promptly replace or repair the defective or misfabricated material at the direction of the Owner or the Owner's Engineer at no cost to the Owner. If replacement or repair are not made in a timely manner to support the construction schedule requirements, the Owner may replace or repair the material in question and backcharge the Vendor.

13.3 RECEIPT OF DEFECTIVE OR MISFABRICATED MATERIAL

If, upon receipt of the material at the destination or during erection, any defective or misfabricated material is found, the Vendor shall replace or repair this material without cost to the Owner, or the Owner may make repairs as mutually agreed with the Vendor. Repairs so made by the Owner will be backcharged to the Vendor. The defective or misfabricated material being replaced by the Vendor will be held by the Owner until replaced, unless otherwise directed by the Owner's Superintendent.

13.4 LIABILITY FOR DEFECTIVE OR MISFABRICATED MATERIAL

If the Inspector, through oversight or otherwise, has accepted material or Work which is defective, misfabricated, or contrary to this Specification or the Engineering Drawings, this material, no matter in what stage of completion, may be rejected by the Owner.

13.5 QUALITY RECORDS

13.5.1 The Vendor shall provide records, including drawings where necessary, to show the extent of materials or welding tested, the methods used for testing, the locations where tests were made, welding equipment, procedure and material, preheat used, and any repairs necessary to correct defective materials. The inspection records shall be prepared specifically for the Owner's plant material.

13.5.2 The Vendor shall provide the following Quality Records prior to start of work specifically for the Modifications and Additions.

a. Non-Destructive Testing (NDT) Personnel Qualifications

b. Welding Personnel Qualification

c. Welding Procedures

13.5.3 Typical Inspection Reports and Releases and the following records after work is completed or in-process, whichever is the case:

a. Final Inspection Reports and Releases

b. Magnetic Particle (MT) Procedures and Examination Final Results

c. Ultrasonic Testing (UT) Procedures and Examination Final Results

d. In-Process Fabrication Inspection Records

13.5.4 <u>Inspection of Welding for Critical and/or Highly Stressed Elements</u>

The Vendor shall provide non-destructive examination of all critical and/or highly stressed elements such as built-up members and rigid frame connections in accordance with this Specification.

The Vendor shall furnish with the Proposal a listing of critical welded areas, joints, rigid frame connections that will potentially require ultrasonic testing of base materials and magnetic particle weld inspection. This work applies to structural steel framework and not general structural platework such as chutework and loading skirts. Inspection of these items is covered under Section 13.8.

Plates shall be ultrasonically tested in areas where welding attachments will be made. These areas shall include hanger attachments, web attachments, framing attachments; but shall exclude stiffener attachments.

Ultrasonic inspection shall be performed in accordance with Section 6, Parts A and C of AWS D1.1, the referenced specification in this Specification.

Dry Power Magnetic Particle Inspection shall be performed in accordance with ASTM E709.

All defective welds shall be corrected in accordance with AWS D1.1-81.

Inspection records shall be provided as required in Article 16 of this Specification.

13.6 GALVANIZED MATERIAL INSPECTION

All material warped by galvanizing shall be straightened without injury to the galvanizing.

Material rejected by reasons of defective coating shall have the coating completely removed in acid bath before redipping. If any defective material is found upon receipt of material at the destination, the Vendor shall replace this material at no chage to the Owner. Such replaced material shall be subject to inspection.

13.7 BOLTED CONNECTIONS

If high strength steel bolts are used in connections, the Vendor shall furnish, for the use of the Inspector, a feeler gauge for use in spot checking the direct tension indicators assembled as part of the shop bolted connections. The feeler gauge shall meet the approval of the Owner's Engineer. The Vendor will perform inspection of bolted connections in accordance with the following requirements.

13.7.1 When the direct tension indicator is installed away from the turned element the installation shall be judged correct if the "average" gap is equal to or less than 15 mils (0.015").

13.7.2 When the direct tension indicator is installed adjacent to the turned element the installation shall be judged correct if the "average" gap is equal to or less than 15 mils (0.005").

13.7.3 The "average" gap is not a calculated average. The average gap is considered satisfied if in a series of trials on a connection the feeler gauge enters the gap on no more than 50 percent of the trials.

13.7.4 A minimum of two bolts or 10 percent of the total bolts per connection, whichever is greater, shall be checked with the feeler gauge. Any remaining bolts shall be inspected visually.

13.7.5 If one or more bolts in a connection are below the minimum tension as indicated by the feeler gauge test, then all bolts in that connection shall be checked.

13.7.6 When bolt gaps are greater than specified, the bolts shall be further tightened. If the required gaps cannot be obtained, the bolts shall be removed and discarded and a new bolt assembly and direct tension indicator shall be installed.

13.7.7 Gaps less than specified are not cause for rejection.

13.8 WELDING INSPECTION, TESTING, AND ACCEPTANCE

13.8.1 All general shop and field welding not required to be inspected by nondestructive testing shall be visually inspected. Should visual evidence of substandard welding occur, nondestructive examination will be required.

13.8.2 All welding inspections and tests shall be performed by the Vendor in accordance with AWS D1.1-81, Section 6, to quality acceptance levels defined in AWS D1.1-81, Paragraph 8.15.

13.8.3 The cost of nondestructive testing and weld inspection is to be a part of the Vendor's expense. If ASNT and/or AWS qualified inspectors are not employed by the Vendor or the Vendor's subcontractor, an independent testing laboratory shall be retained by the Vendor at the Vendor's expense. All ASNT qualified inspectors for non-destructive testing are to be qualified per SNT-TC-1a, Level II. All inspectors used for visual weld inspection shall be qualified to AWC QC-1. The Vendor's inspectors shall <u>not</u> be involved in production work while acting as an inspector.

13.8.4 All defective welds shall be removed and repaired in accordance with AWS D1.1-81 at the Vendor's expense. Any welds tested by nondestructive examination which require repair shall be retested at the Vendor's expense.

13.9 TEST PROGRAM

The Owner shall, with the participation of the Vendor and the Owner's Engineer, conduct a dry run test and the checkout of the Coal Handling System and all ancillary equipment and systems. The Owner and Owner's Engineer shall be advised 2 weeks prior to the test date that the Coal Handling System is ready for all tests.

13.10 ELECTRICAL EQUIPMENT

13.10.1 Completely assembled units, such as motors, miscellaneous switches, control panels, wire, shall be tested in accordance with the manufacturer's standards and applicable standards of ANSI, NEC, NEMA, and IPCEA as referenced in this Specification.

13.10.2 Certified copies of all tests performed on Vendor supplied electrical equipment shall be furnished with the equipment.

13.10.3 The Owner or Owner's Representative and/or Owner's Engineer reserves the right to inspect all electrical equipment before shipment to the plant site and to witness all tests. The Vendor shall notify the Owner's Engineer and Owner's Representative at least 5 days in advance of testing to allow arrangements to be made in the event this option is exercised.

14.0 CLEANING, CORROSION PROTECTION, AND COATINGS

14.1 CLEANING REQUIREMENTS

All structural steel, steel platework, steel surfaces and handrail, to be shop painted shall be shop cleaned and prepared for painting after fabrication in accordance with the latest edition of Surface Preparation Specification SSPC-SP6, "Commercial Blast Cleaning" of the Steel Structures Painting Council (1973).

All embedded steel and chutes to be wear lined shall be cleaned of rust and mill scale in accordance with SSPC-SP3.

Steel surfaces must be free from frost, oil, dirt, grease and other deleterious materials and the dewpoint temperature must be above 5°C (40°F) when paint is applied.

Material shall be kept from exposure to the weather until it has been shop painted and the paint is dry.

14.2 SPECIAL PAINT CONSIDERATIONS

Exposed unfinished surfaces of machinery shall receive one shop coat of gray machinery paint of the manufacturer's standard. Surfaces which will be inaccessible after assembly shall be given two coats of shop paint. Manufacturer's standard shop paint shall be compatible with field paint requirements as specified in paragraph 14.4.

The inside of all chutes and other areas to be lined shall be ship painted prior to attaching the wear liners.

The Vendor shall finish paint belt conveyor deck plate and conveyor tables before idlers are mounted and belting is strung and spliced.

The following items <u>are not</u> to be shop or field painted unless noted:

a. Items or surfaces coming in contact with concrete.

b. Field welded connections (to be field cleaned, primed and finish painted after welding)

c. Galvanized steel

d. Stainless steel

e. Loading skirt liners

f. Machined surfaces

g. Faying surfaces of field bolted joints (to be field cleaned, primed, and finish painted after erection)

h. Black rubber seals or curtains

i. Interior of ducts, hoods, and head casings

j. Aluminum surfaces

k. Conveyor belting

14.3 SHOP PAINT REQUIREMENTS

Unless otherwise noted on the Inquiry drawings or in this Specification, structural steel, steel platwork, and handrailing shall receive a shop applied coat of Carbo-Zinc 11 inorganic zinc primer as manufactured by Carboline Company.

Surfaces of embedded parts which are not in contact with the concrete shall be painted per the manufacturer's recommendations for the intended finish paint.

All shop paint shall be applied in accordance with the manufacturer's recommendations unless such recommendations conflict with this Specification, in which event, said conflicts shall be brought to the attention of the Owner's Engineer for resolution. A minimum 3 mil dry film thickness shop coat shall be applied.

Total elasped time between start of blast cleaning and start of coating shall not exceed 10 hours. Holidays, runs and sags shall not be acceptable. Defects shall be removed and surfaces shall be recoated.

14.4 FIELD PAINT REQUIREMENTS

The Coal Handling System equipment and structures are to be cleaned and prepared before applying the finish paint in accordance with the manufacturer's recommendation.

The finish coat for all exposed concrete embedments or steel to be covered with coal shall be one coat of coal tar epoxy at 14 mils minimum to 20 mils maximum DFT.

14.5 COLOR CODING

The following color coding is offered to generally assist the Vendor in determining Owner's desire for color selection but is not to be considered inclusive. Owner will select specific color selections after bid award.

a. Motors - 4110 Polar Green

b. Conveyor Structures - Owner's Option

c. Handrails - 0445 Yellow

d. Safety Guards - 0445 Yellow

e. Electrical Panels - 8944 Brilliant Green

f. Monorails - 0445 Yellow

15.0 MARKING AND IDENTIFICATION

15.1 GENERAL

15.1.1 Each piece and package which is to be shipped separately shall be tagged and marked with a distinct erection mark using a paint stick in the shop. Paint stick shall be compatable with finish paint.

15.1.2 All pieces shall be stamped before galvanizing with piece marks shown on the Vendor's Erection Drawings. The marking shall not be less than 19mm (3/4") high placed in the same relative location on all pieces and shall be plainly visible after galvanizing.

15.1.3 All non-galvanized parts shall have the piece mark number painted on the piece.

15.1.4 Each piece mark shall include the number of the Vendor Drawing on which the piece is detailed.

15.1.5 Members weighing more than three tons shall have the weight marked thereon.

15.1.6 Mark the north flange face of all columns "North", and mark the east flange of the column "East".

15.1.7 Beams and girders which are not symmetrical shall be marked to designate the top, and north or east end.

15.1.8 All equipment shall be identified with nameplates or laminated plastic. Each motor, gear reducer, gate operator, etc., shall have an identifying nameplate with 6.3mm (1/4") white letters on a black background with inscriptions approved by the Owner's Engineer before manufacture.

15.2 LOOSE PARTS IDENTIFICATION

Bolts and fasteners shall be identified, packaged, and shipped in accordance with Paragraph 16.0 of this Specification.

15.3 STEEL YIELD STRESS IDENTIFICATION

Steel other than ASTM A-36 shall, at all times in the Vendor's plant, be marked to identify its ASTM designation. Identification of such steel in completed members of assemblies shall be marked by painting the ASTM designation on the piece, over any shop coat of paint, prior to shipment from the Vendor's plant.

15.4 ELECTRICAL

15.4.1 Starter Nameplates

Starter nameplates shall be made of a white laminate with black lettering, a minimum of 6.3mm (1/4") high lettering. Nameplates shall identify the equipment they are controlling.

15.4.2 Control Nameplates

Control nameplates shall be permanently mounted and shall be weatherproof. The nameplate legend shall indicate Instrumentation Tag numbers by others during the drawing review stage.

16.0 PACKAGING, SHIPPING, AND STORAGE

16.1 GENERAL

16.1.1 The Vendor shall submit an advanced packaging and shipping list to the Owner's Superintendent prior to shipment of materials.

16.1.2 The Owner's Superintendent shall be verbally notified, by telephone, 2 days before shipping for plant site and unloading coordination.

16.1.3 Parts not completely assembled in the shop shall be secured by bolts, insofar as is practical, to prevent damage in shipment and handling.

16.1.4 All equipment and material furnished in accordance with this Specification shall be shipped FOB jobsite:

(LATER)

Attention:

16.2 SHIPPING SEQUENCE

All materials shall be shipped in accordance with the proposed schedule.

16.3 PACKAGING

16.3.1 Fasteners and other small parts including, but not limited to, U-bolts, washers, and nuts shall be packaged in cartons or kegs. Bolts of same size and length shall be packaged separately and identification marks plainly marked on the outside of the package. Washers and other items of same size

and shape shall have an identification mark and be packaged separately with the identification mark plainly indicated on the carton or keg. Cartons or kegs shall be of such size and weight so they may be conveniently handled by hand, and shall be of such strength that they will not break open during normal handling.

16.3.2 A list and description of the contained material shall be plainly marked on the outside of each shipping container.

16.3.3 Three copies of packing lists and shipping memoranda, such as special handling requirements, storage instruction, etc., shall be mailed, as set forth below, 48 hours before shipment is made. Packing lists shall include Owner's tag number. Copies of shipping papers shall be mailed as follows:

a. Original and one copy to:

(LATER)

Attention:
Project Superintendent

b. One copy to:

Gilbert/Commonwealth International Inc.
209 East Washington Avenue
Jackson, Michigan 49201

Attention:
Project Manager

In addition, one copy of shipping papers shall accompany each shipment.

16.3.4 Particular attention must be paid to protecting bolts and nuts from moisture.

16.3.5 Care shall be taken to provide assurance that primed and galvanized surfaces are not damaged during shipment to the jobsite. Damaged items shall be repaired at no cost to the Owner.

16.3.6 The Vendor shall preassemble all galleries and/or trusses in the largest practical sizes, for shipment to the jobsite.

16.4 PERMITS AND SPECIAL SHIPPING

The Vendor shall be responsible for all permits required for shipping. If special shipping arrangements are required, such

as oversize loads or special railroad handling, the Owner's Representative, at his option, may accompany the shipment. The Vendor shall notify the Owner's Superintendent 5 days prior to making such shipments.

16.5 SPECIAL HANDLING, UNLOADING, OR STORAGE REQUIREMENTS

16.5.1 The Vendor shall submit, to the Owner's Engineer, a list of all equipment, material, or assemblies, at least 30 days prior to shipping, which may require special handling, unloading or storage at the jobsite. This submittal shall include specific instructions for handling, unloading, or storage. Storage instructions shall include maintenance requirements during storage.

16.5.2 The Vendor will be assigned a limited on-site storage area by the Owner's Superintendent. The Vendor shall furnish with the Proposal all construction site requirements and include area requirements for indoor and outdoor storage. No material will be accepted more than 2 months prior to scheduled dates.

16.5.3 The Vendor shall prepare all equipment and material covered by this Specification for shipment in such a manner as to protect it from damage in transit and shall be responsible for and correct, at his expense, damage caused by improper preparation.

17.0 ACCEPTANCE CRITERIA

17.1 Acceptance of the Coal Handling System shall be based on completion of the following:

17.1.1 Dry run testing of the Coal Handling System has been completed and the Vendor has made all adjustments, calibrations, etc.

17.1.2 Capacities tests of the Coal Handling System have been completed to the satisfaction of the Owner and/or the Owner's Engineer.

17.1.3 All final documentation has been properly transmitted to the Owner and/or the Owner's Engineer for distribution and archival purposes.

ATTACHMENT 2A

DATA SHEETS

BELT CONVEYOR DATA SHEET

PROJECT _____

DATE _____ CONVEYOR NO. _____

Conveyor Path (Draw)

Operating Data

Belt Width _____

Belt Speed _____ M/Sec. (fpm)

Design Capacity _____ tonnes/hr (TPH)

Hours of Operation _____ hrs/day

Material Handled _____

Density _____ Kgs/cu. meter (#/cu/ft)

Moisture _____

T1 = _____ T2 = _____

Surcharge Angle Allowed _____

Length (Horizontal c/c End Pulleys) _____

Lift _____

Slope _____

Drive Type _____ Wrap _____

Particle Size _____

Operating Temperatures _____

Max. Belt Tension _____

@ _____

Belting Data

Width _____

Number of Plies _____

Construction _____

Cover Thick: Top _____ Bot. _____

Cross Sectional Area _____ sq. meter sq ft

Manufacturer _____

Grade _____

Type of Splice _____

Rated Working Tension _____ Kgs/cu/width (#/"/width)

Breaker Strip _____

Edges _____

Exact Length (Incl. Splice Allowance) ____

Idler

	Troughing	Return	Troughing Training	Return Training	Impact	Special
Style						
Diameter (mm)						
Bearings						
Spacing						
Manufacturer						

Describe any "Special" Idlers to be used.

Pulleys

	Drive A	Head Snub B	Bend C	Bend D	Tail E	F	Take Up Type	Take Up Travel
Diameter (mm)								
Width (mm)								
Shaft Dia. (mm)								
Bearing Size (mm)								
Bearing Type								
Bearing Life								
Manufacturer								

Drive Equipment

Estimated hp required at Motor Shaft _____

Motor: _____ Final hp _____ rpm NEMA Design _____ Manufacturer _____

_____ Volts _____ Phase _____ Cycles

Speed Reducer: Type _____ Model No. _____

Ratio _____ Output _____ rpm AGMA Rating _____ hp

Couplings: _____ Hi Speed _____ Low Speed _____ Holdback _____

Chain Drive: _____

Manufacturer: _____

NOTE: Attach other data as required. Provide data sheet for each belt conveyor drive.

Prepared by: _____

Company: _____

STANDARD STRUCTURAL STEEL DETAILS

DRAWING INDEX

Drawing No.	Sheet	Title
SDS-201	1	Standard Structural Steel Details - Handrail
SDS-201	2	Standard Structural Steel Details - Handrail
SDS-201	3	Standard Structural Steel Details - Handrail
SDS-201	4	Standard Structural Steel Details - Handrail
SDS-201	5	Standard Structural Steel Details - Handrail
SDS-202	1	Standard Structural Steel Details - Handrail Posts
SDS-203	1	Standard Structural Steel Details - Toeplates
SDS-204	1	Standard Structural Steel Details - Grating
SDS-205	1	Standard Structural Steel Details - Stairs
SDS-205	2	Standard Structural Steel Details - Stairs
SDS-205	3	Standard Structural Steel Details - Stairs
SDS-206	1	Standard Structural Steel Details - Ladders
SDS-206	2	Standard Structural Steel Details - Ladders
SDS-206	3	Standard Structural Steel Details - Ladders
SDS-206	4	Standard Structural Steel Details - Ladders

ATTACHMENT 2C

Refer to Electrical Motor Specifications E-1 and E-2.

SPECIFICATION NO. S-4

FOR

COAL HANDLING SYSTEM

FOR
LAKHRA POWER PROJECT

EXCEPTIONS TO INQUIRY

The Bidder shall list below all exceptions taken to any part of the Inquiry. Any exceptions taken elsewhere in the Proposal, including standard printed forms, will not be considered unless listed below. Listed exceptions will be evaluated and will not become part of a binding agreement unless accepted by the Owner. A complete explanation of each exception is required.

The above are the only exceptions taken to all documents included in this Inquiry.

_____
Company Name

_____
Authorized Signature

_____
Date

MINIMUM BEAM CONNECTIONS

Note:

1. The following connections are to be used as a minimum unless a controlling shear load listed (V=_) appears on the engineering drawing.
2. Values are based on the use of E70-XX electrodes for welds and 22mm (7/8") ØA-325 friction type bolts in standard holes in the outstanding legs for field connection.
3. All connection angles are 100 x 89 x 9.5mm (4 x 3 1/2 x 3/8") with the 4" leg outstanding.
4. Values are obtained from AISC Manual 8th edition.

Beam Depth mm Nom. Ins.	Beam Reaction Rm	Rows of Bolts	Allow. Bolt Reac. Rb	Connection Angle Length L	Weld Size Ws	Allow. Weld Reac. Rw
914mm (W36)	57,152 Kg 126.k	6	57,152 Kg 126.k	457mm (18")	6mm (1/4")	62,595 Kg 138.k
836mm (W33)	126.	6	126.	(18")	(1/4")	138.
762mm (W30)	47,626 Kg 105.	5	47,626 Kg 105.	406mm (16")	(1/4")	56,698 Kg 125.
686mm (W27)	105.	5	105.	(16")	(1/4")	51,255 Kg 113.
609mm (W24)	33,112 Kg 73.	4	38,101 Kg 84.	305mm (12")	4mm (3/16")	33,112 Kg 73.
533mm (W21)	30,390 Kg 67.	4	84.	(12")	(3/16")	30,390 Kg 67.
457mm (W18)	20,411 Kg 45.	3	28,576 Kg 63.	228mm (9")	(3/16")	20,411 Kg 45.
406mm (W16)	17,236 Kg 38.	3	63.	(9")	(3/16")	17,236 Kg 38.
355mm (W14)	15,875 Kg 35.	3	63.	(9")	(3/16")	15,875 Kg 35.
305mm (W12)	9,525 Kg 21.	2	19,050 Kg 42.	154mm (6")	(3/16")	9,525 Kg 21.
254mm (W10)	9,071 Kg 20.	2	42.	(6")	(3/16")	9,071 Kg 20.
203mm (W8)	7,711 Kg 17.	2	42.	(6")	(3/16")	7,711 kg 17.
154mm (W6)	4,989 Kg 11.	1	9,525 Kg 21.	100mm (4")	(3/16")	4,989 Kg 11.
609mm (S24)	33,112 Kg 73.	4	38,101 Kg 84.	305mm (12")	(3/16")	33,112 Kg 73.
508mm (S20)	73.	4	84.	(12")	(3/16")	73.

MINIMUM BEAM CONNECTIONS
(Continued)

Beam Depth mm Nom.Ins.	Beam Reaction Rm		Rows of Bolts	Allow. Bolt Reac. Rb		Connection Angle Length L	Weld Size Ws	Allow. Weld Reac. Rw	
457mm (S18)	25,854 Kg	57.	3	28,576 Kg	63.	228mm (9")	(3/16")	25,854 Kg	57.
381mm (S15)		57.	3		63.	(9")	(3/16")		57.
305mm (S12)	16,329 Kg	36.	2	19,050 Kg	42.	154mm (6")	(3/16")	16,329 Kg	36.
254mm (S10)	14,514 Kg	32.	2		42.	(6")	(3/16")	14,514 Kg	32.
203mm (S8)	12,700 Kg	28.	2		42.	(6")	(3/16")	12,700 Kg	28.
178mm (S7)	7,711 Kg	17.	1	9,525 Kg	21.	100mm (4")	(3/16")	7,711 Kg	17.
154mm (S6)	7,257 Kg	16.	1		21.	(4")	(3/16")	7,257 Kg	16.
457mm (MC18)	25,854 Kg	57.	3	28,576 Kg	63.	228mm (9")	(3/16")	25,854 Kg	57.
330mm (MC13)	17,339 Kg	38.	2	19,050 Kg	42.	154mm (6")	(3/16")	17,236 Kg	38.
305mm (MC12)	17,690 Kg	39.	2		42.	(6")	(3/16")	17,690 Kg	39.
254mm (MC10)	14,968 Kg	33.	2		42.	(6")	(3/16")	14,968 Kg	33.
228mm (MC9)	17,690 Kg	39.	2		42.	(6")	(3/16")	17,690 Kg	39.
203mm (MC8)	17,236 Kg	38.	2		42.	(6")	(3/16")	17,236 Kg	38.
178mm (MC7)	10,885 Kg	24.	1	9,525 Kg	21.	100mm (4")	(3/16")	10,885 Kg	24.
154mm (MC6)	9,525 Kg	21.	1		21.	(4")	(3/16")	9,525 Kg	21.
381mm (C15)	25,854 Kg	57.	3	28,576 Kg	63.	228mm (9")	(3/16")	25,854 Kg	57.
305mm (C12)	13,154 Kg	29.	2	19,050 Kg	42.	154mm (6")	(3/16")	13,154 Kg	29.
254mm (C10)	11,339 Kg	25.	2		42.	(6")	(3/16")	11,339 Kg	25.
229mm (C9)	10,885 Kg	24.	2		42.	(6")	(3/16")	10,885 Kg	24.
203mm (C8)	10,432 Kg	23.	2		42.	(6")	(3/16")	10,432 Kg	23.
178mm (C7)	6,350 Kg	14.	1	9,525 kg	21.	100mm (4")	(3/16")	6,350 Kg	14.
154mm (C6)		14.	1		21.	(4")	(3/16")		14.

LAKHRA POWER FEASIBILITY STUDY

SPECIFICATION S-5

CIRCULATING WATER PIPING

LPS/B4028/D9

LAKHRA POWER FEASIBILITY STUDY

SPECIFICATION S-5

CIRCULATING WATER PIPING

TABLE OF CONTENTS

Item		Page
1.0	DESCRIPTION OF WORK	1
2.0	WORK INCLUDED	1
3.0	WORK NOT INCLUDED	1
4.0	APPLICABLE CODES, STANDARDS, AND REGULATIONS	1
5.0	SUPPLEMENTAL DATA	2
6.0	VENDOR DATA (NONE)	3
7.0	DESIGN REQUIREMENTS	3
8.0	PERFORMANCE REQUIREMENTS (NONE)	5
9.0	MATERIAL REQUIREMENTS	5
10.0	FABRICATION AND ASSEMBLY REQUIREMENTS	5
11.0	INSTALLATION REQUIREMENTS	6
12.0	PERSONNEL REQUIREMENTS (NONE)	6
13.0	INSPECTIONS AND TESTS	6
14.0	CLEANING, CORROSION PROTECTION AND COATING (NONE)	7
15.0	MARKING AND IDENTIFICATION	7
16.0	PACKAGING, SHIPPING, AND STORAGE	8
17.0	ACCEPTANCE CRITERIA (NONE)	10

ATTACHMENTS: (Later)

LAKHRA POWER FEASIBILITY STUDY

SPECIFICATION S-5

CIRCULATING WATER PIPING

1.0 DESCRIPTION OF WORK

1.1 This Specification covers the design, detailing furnishing, fabrication, delivery of approximately (later) meters (linear feet) of 2.75M (9'-0" diameter) concrete pipe for circulating water and transition pieces as shown and called for on the Drawings, listed in the letter of inquiry and as specified herein.

1.1.1 The pipe diameter given is the nominal inside diameter of the pipe.

1.1.2 The pipe shall be prestressed concrete pressure pipe, steel cylinder type.

2.0 WORK INCLUDED

The piping manufacturer shall furnish all materials necessary for the proper installation of the aforementioned piping, grout mix for joints, transition pieces and the proper connection, where shown on the Drawings, of said piping to structures not included in this Contract.

3.0 WORK NOT INCLUDED

Installation

4.0 APPLICABLE CODES, STANDARDS AND REGULATIONS

All work and materials shall be in accordance with the latest revision of the following codes, regulations and standards as referenced herein. In the event the referenced code, regulation or standards conflicts with this Specification, this Specification shall govern.

4.1 AMERICAN WATER WORKS ASSOCIATION (AWWA)

AWWA C203 - Coal-Tar Enamel Protective Coatings for Steel Water Pipe

AWWA C301 - Reinforced Concrete Water Pipe, Steel Cylinder Type, Prestressed

AWWA, Manual M.9 - Installation of Concrete Pipe

4.2 AMERICAN SOCIETY FOR TESTING AND MATERIALS (ASTM)

The pipe manufacturer shall adhere to all ASTM requirements related to pipe as specified herein.

4.3 AMERICAN WELDING SOCIETY (AWS)

AWS D1.1 - Structural Welding Code

4.4 AMERICAN RAILWAY ENGINEERING ASSOCIATES (AREA)

Construction and Maintenance Section - Manual of Recommended Practice - Volumes I and II

4.5 AMERICAN ASSOCIATION OF STATE HIGHWAY TRANSPORTATION OFFICIALS (AASHTO)

Standard Specification for Highway Bridges

4.6 It shall be assumed that the above codes, regulations and standards apply to 2.75 meter (9'-0") diameter pipe.

4.6.1 It shall be assumed that AWWA C203 is applicable for coal-tar epoxy coatings.

5.0 SUPPLEMENTAL DATA

a. Prior to the beginning of pipe fabrication, the piping manufacturer shall submit three prints of all shop drawings and three copies of all design calculations to Gilbert/Commonwealth International Inc. for approval.

b. Shop drawings shall give all pertinent information for the type of pipe furnished.

c. Pipe manufacturer shall furnish a general arrangement drawing of 2.75 meter (9'-0") diameter pipe. The drawing shall show all dimensions including stations necessary to locate and install the pipe. Piece marks shall be shown on this drawing.

d. For prestressed concrete pipe, shop drawings shall show piece marks, joint details, size and thickness of core cylinder, reinforcing details of longitudinal and spiral bars, details of steel bell and spigot rings in accordance with this Specification.

The pipe manufacturer shall supply a tabulated layout schedule and installation instructions. The layout schedule shall show stationing, grade line, pressure zones and transition zones.

e. Design calculations shall show all assumptions made to determine critical loading conditions, design stresses developed in the pipe and locations and intensities of thrust.

f. After approval, __ prints of each shop drawing will be required for use and distribution of Gilbert/Commonwealth International Inc.

All shop drawings shall be sent prepaid to the attention of:

Gilbert/Commonwealth International Inc.
209 East Washington Avenue
Jackson, Michigan 49201.

g. The piping manufacturer shall supply, to the Owner, certificates for all materials: gaskets, lubricants, etc.

h. The piping manufacturer shall state in his Proposal the location of his manufacturing plant and his capability to provide an onsite casting plant.

6.0 VENDOR DATA

None

7.0 DESIGN REQUIREMENTS

7.1 INTERNAL PRESSURE

a. Circulating water piping shall be designed for a normal internal operating pressure of 620 kPa (90 psi).

b. Maximum normal flow of makeup water shall be 945 liters/sec. (15,000 gpm).

c. Maximum normal flow of circulating water shall be 12,000 liters/sec. (190,000 gpm).

7.2 EXTERNAL LOADS

Piping shall be designed to satisfactorily support the following external loads where such conditions exist as shown

on the Drawings. The design shall assume these loads to work in conjunction with the internal pressures or alone, whichever develops a more critical design condition.

a. Maximum cover shall be taken as 3M (10'-0") unless otherwise specified or shown on the Drawings.

b. The pipe shall be designed to withstand a maximum load from a single wheel of 13.6 tonnes (15 tons) with 1.2M (4'-0") of cover which could occur at any point along the length of the pipe.

c. At railroad crossovers the maximum load shall be assumed to be that load resulting from Cooper E80 load condition as defined by the American Railway Engineering Association, hereinafter denoted as AREA. At railroad crossovers piping shall be designed in strict accordance with applicable sections of the AREA Manual of Recommended Practice.

7.3 WATER CONDITIONS

a. The source of water for circulating water will be the Indus River.

b. Piping manufacturer shall assume the water to be chlorinated.

c. Liner in circulating water piping shall be designed for a concentration of dissolved solids eight times the normal water source concentration. Normal water source concentration shall be assumed to be 1500 ppm.

d. The piping manufacturer shall state in his Proposal the pH limits for which the liner will be designed.

e. Temperature variance of the circulating water will range from a minimum of $5^{o}C$ ($40^{o}F$) to a maximum of $54^{o}C$ ($130^{o}F$).

7.4 SOIL CONDITIONS

a. Pipe shall be supported on dense to very dense sand and gravel.

b. Modulus of subgrade reaction shall be taken as 15875 Kg/M^3 (35 kips per cubic foot).

c. Pipe manufacturer shall state in his Proposal the maximum allowable differential settlement, the recommended type of bedding, and backfilling requirements.

7.5 HARNESSED JOINTS

a. All joints at elbows located outside the base slab shall be harnessed so that any thrust will be transmitted axially through the pipe and dissipated to the earth unless otherwise shown on the Drawings.

b. The pipe manufacturer shall be responsible for the calculation of thrusts based on the flow conditions specified herein.

c. The pipe manufacturer shall determine the quantity of harnessed joints required and include the costs of such joints in his proposal.

8.0 PERFORMANCE REQUIREMENTS

None

9.0 MATERIALS REQUIREMENTS

9.1 For prestressed reinforced concrete pipe the following criteria shall be used for materials and fabrication:

a. Cement shall be Portland Cement Type II, low alkali with not more than 0.6 percent by weight of equivalent sodium oxide in accordance with ASTM Designation C-150.

b. Fine and coarse aggregates shall conform to the requirements of the aforementioned AWWA Standard C301 and the applicable ASTM Designations specified by that standard.

c. Water used for concrete and curing shall be fresh and clean, free from oil, acid, strong alkalies, or vegetable matter.

d. Steel for cylinders reinforcement, joint rings, castings for fittings and plates for special fittings shall conform to the requirements of AWWA Standard C301 and the ASTM Designations specified by that Standard.

e. Joints shall be sealed with continuous ring gaskets which shall be the sole element depended upon to make the joint watertight. Gaskets shall conform to the AWWA Standard C301.

f. The pipe manufacturer shall provide a sufficient quantity of a good grade soft vegetable soap for the lubrication of gaskets and spigot grooves prior to field installation.

10.0 FABRICATION AND ASSEMBLY REQUIREMENTS

10.1 Joints shall be double gasketed type suitable for testing for leaks immediately following pipe installation. Pipe manufacturer shall state in his proposal the method of testing and required test pressure.

10.2 Joints shall be bell and spigot type so designed and fabricated that the pipe will be self-centering when laid.

10.3 Concrete pipe shall be constructed by the vertical casting method.

10.4 All aspects of fabrication, coating and curing of the pipe shall be in accordance with the aforementioned AWWA Standard C301.

10.5 The piping manufacturer shall specify special installation requirements; however, installation will generally conform to AWWA Manual M-9.

11.0 INSTALLATION REQUIREMENTS

a. Installation - Installation of all piping will be performed by the Owner's General Contractor.

b. Superintendent of Installation - The piping manufacturer shall furnish the services of a qualified superintendent of installation when requested by the Owner to advise the Owner's General Contractor on correct installation procedures.

c. Special Requirements - The manufacturer shall state in his proposal any special tools, equipment or procedures necessary for the General Contractor to install the pipe.

12.0 PERSONNEL REQUIREMENTS

None

13.0 INSPECTIONS AND TESTS

a. The pipe manufacturer shall perform all tests required by the aforementioned Standards in accordance with the Standards.

b. Materials which do not meet the requirements of the above-mentioned tests shall not be used and shall be replaced with new material subject to the same tests.

c. All test results shall be made available to Gilbert/Commonwealth International Inc. upon request.

13.1 INSPECTION BY OWNER

General

a. The term "Inspector" referred to herein is defined as the authorized representative of the Owner.

b. Materials and workmanship shall at all times be subject to the Owner's inspection.

c. The piping manufacturer shall cooperate with the Inspector and shall permit him access to all parts of the work.

d. The piping manufacturer shall notify the Owner when the various parts are ready for inspection.

e. If, upon receipt of the material at its destination, any defective material is found, the piping manufacturer shall replace this material free of charge f.o.b. destination. The defective material shall be held until replaced.

13.2 AUTHORITY TO REJECT

The Inspector shall have authority to reject all materials and workmanship not conforming to the drawings and/or Specifications and any time defects are found during the progress of the work, the manufacturer shall promptly replace the same.

13.3 LIABILITY FOR DEFECTIVE MATERIAL

If the Inspector, through oversite or otherwise, has accepted material or work which is defective or contrary to these Specifications or Drawings, this material no matter in what stage of completion may be rejected by the Owner.

14.0 CLEANING, CORROSION PROTECTION AND COATING

None

15.0 MARKING AND IDENTIFICATION

15.1 MARKING

a. Permanent identification marks suitable for placing piping in its proper sequence and location shall be plainly marked on each piece. Piece marks shall also be shown on the General Arrangement Drawings and laying schedules.

b. Each pipe shall also have permanent markings showing the pressure for which it is designed.

15.2 SHIPPING

a. All piping and materials shall be shipped so that it will be available to the General Contractor at the scheduled time of installation as specified in Article 15.3 of this Specification.

b. Available means of shipping are truck and/or railroad.

c. Shipping addresses for truck or rail are as follows:

(Later)

15.3 DELIVERY

a. Scheduled delivery dates for all piping and transition pieces are:

(Later)

b. Pipe manufacturer shall state in his proposal the method of delivery and length of time required for delivery after approval of shop drawings.

16.0 PACKAGING, SHIPPING, AND STORAGE

16.1 GENERAL

16.1.1 The Vendor shall submit an advanced packaging and shipping list to the Owner's Superintendent prior to shipment of materials.

270

16.1.2 The Owner's Superintendent shall be verbally notified, by telephone, 2 days before shipping for plant site and unloading coordination.

16.1.3 All equipment and material furnished in accordance with this Specification shall be shipped FOB jobsite:

(Later)

16.2 SHIPPING SEQUENCE

All materials shall be shipped in accordance with the proposed schedule.

16.3 PACKAGING

16.3.1 A list and description of the contained material shall be plainly marked on the outside of each shipping container.

16.3.2 Three copies of packing lists and shipping memoranda, such as special handling requirements, storage instruction, etc., shall be mailed, as set forth below, 48 hours before shipment is made. Packing lists shall include Owner's tag number. Copies of shipping papers shall be mailed as follows:

a. Original and one copy to:

(Later)

b. One copy to:

Gilbert/Commonwealth International Inc.
209 East Washington Avenue
Jackson, Michigan 49201

Attention:
Project Manager

In addition, one copy of shipping papers shall accompany each shipment.

16.3.3 Care shall be taken to provide assurance that primed and galvanized surfaces are not damaged during shipment to the jobsite. Damaged items shall be repaired at no cost to the Owner.

16.4 PERMITS AND SPECIAL SHIPPING

The Vendor shall be responsible for all permits required for shipping. If special shipping arrangements are required, such as oversize loads or special railroad handling, the Owner's Representative, at his option, may accompany the shipment. The Vendor shall notify the Owner's Superintendent 5 days prior to making such shipments.

16.5 SPECIAL HANDLING, UNLOADING, OR STORAGE REQUIREMENTS

16.5.1 The Vendor shall submit, to the Owner's Engineer, a list of all equipment, material, or assemblies, at least 30 days prior to shipping, which may require special handling, unloading or storage at the jobsite. This submittal shall include specific instructions for handling, unloading, or storage. Storage instructions shall include maintenance requirements during storage.

16.5.2 The Vendor will be assigned a limited on-site storage area by the Owner's Superintendent. The Vendor shall furnish with the Proposal all construction site requirements and include area requirements for indoor and outdoor storage. No material will be accepted more than 2 months prior to scheduled dates.

16.5.3 The Vendor shall prepare all equipment and material covered by this Specification for shipment in such a manner as to protect it from damage in transit and shall be responsible for and correct, at his expense, damage caused by improper preparation.

17.0 ACCEPTANCE CRITERIA

As referenced in Section 13.

LAKHRA POWER FEASIBILITY STUDY

SPECIFICATION S-6

REINFORCED CONCRETE CHIMNEY WITH BRICK LINERS

LPS/B3937/D8

- 873

SPECIFICATION NO. S-6

REINFORCED CONCRETE CHIMNEY WITH BRICK LINER

TABLE OF CONTENTS

Item	Title	Page
1.0	DESCRIPTION OF WORK	1
2.0	WORK INCLUDED	1
3.0	WORK NOT INCLUDED	1
4.0	APPLICABLE CODES, STANDARDS, AND REGULATIONS	2
5.0	SUPPLEMENTAL DATA (NONE)	4
6.0	VENDOR DATA	4
7.0	DESIGN REQUIREMENTS	7
8.0	PERFORMANCE REQUIREMENTS (NONE)	11
9.0	MATERIAL REQUIREMENTS	11
10.0	FABRICATION AND ASSEMBLY REQUIREMENTS	25
11.0	INSTALLATION REQUIREMENTS (NONE)	26
12.0	PERSONNEL REQUIREMENTS	26
13.0	INSPECTIONS AND TESTS	26
14.0	CLEANING, CORROSION PROTECTION AND COATING	30
15.0	MARKING AND IDENTIFICATION	31
16.0	PACKAGING, SHIPPING, AND STORAGE	31
17.0	ACCEPTANCE CRITERIA	31

ATTACHMENTS: (LATER)

LAKHRA POWER FEASIBILITY STUDY

TECHNICAL SPECIFICATION S-6

REINFORCED CONCRETE CHIMNEY WITH BRICK LINERS

1.0 DESCRIPTION OF WORK

1.1 The work covered by this Specification shall include the design, detailing, furnishing of all tools and material, labor, supervision, delivery and storage and construction of a 190 meters high (623'-0") reinforced concrete chimney with two independent brick liners 6.66M (21.83') diameter and accessories to service the boiler flue gases of Lakhra Power Station. The design and construction shall be as specified herein and/or as shown on the Gilbert/Commonwealth International Inc. bid drawings.

2.0 WORK INCLUDED

2.1 Items to be furnished shall include but not be limited to the concrete chimney shell, independent brick liners, steel flue, structural steel platforms, grating, ladders, steel doors, handrails, vents, complete lightning protection and grounding system, an obstruction lighting system, interior and exterior lighting system and receptacle system including all hardware, beacons, fixtures, transformers, control devices, and wiring required for a complete installation.

2.2 The following supplemental items shall also be within the Contractor's scope.

2.2.1 A chimney service water system including piping and valves necessary to supply water to the flue access platforms.

2.2.2 A chimney drainage system including a reinforced concrete grade slab, sump pit, drainage system piping, valves, pump electrical wiring and controls.

3.0 WORK NOT INCLUDED

3.1 CHIMNEY FOUNDATION

3.1.1 The foundation will be designed by the Consulting Engineer from information furnished by the Contractor. The foundation will be constructed by others.

3.1.2 Foundation dowels for the chimney shell will be supplied and installed by others.

4.0 APPLICABLE CODES, STANDARDS AND REGULATIONS

Design, materials, manufacture, installation, examination, testing, inspection, and documentation shall conform to the applicable portions of the following specifications, codes, and standards, including case rulings, interpretations, and addenda as applicable and in force at the time of issue of this Specification.

4.1 AMERICAN CONCRETE INSTITUTE

4.1.1	ACI 307	Specification for the Design and Construction of Reinforced Concrete Chimneys
4.1.2	ACI 301	Specification for Structural Concrete for Building
4.1.3	ACI 214	Recommended Practice for Evaluation of Compression Test Results of Field Concrete
4.1.4	ACI 74 (305)	Hot Weather Concreting
4.1.5	ACI 75 (306)	Cold Weather Concreting
4.1.6	ACI 308	Recommended Practice for Curing Concrete

4.2 AMERICAN SOCIETY FOR TESTING MATERIALS

4.2.1	ASTM-A36	Specifications for Structural Steel
4.2.2	ASTM-A123	Specification for Zinc (Hot-Galvanized) Coating on Products Fabricated from Rolled, Pressed and Forged Steel Shapes, Plates, Bars and Strip
4.2.3	ASTM-A2472	Specification for High-Strength Low-Alloy Structural Steel
4.2.4	ASTM A380	Standard Recommended Practice for Cleaning and Descaling Stainless Steel Parts, Equipment and Systems
4.2.5	ASTM A435	Specification for Straight Beam U1 Examination of Steel Plates for Pressure Vessels.

- 216

4.2.6	ASTM-A666	Specification for Austenitic Stainless Steel for Structural Application
4.2.7	ASTM-A167	Stainless and Heat Resisting Chrome-Nickel Steel Plate, Sheet and Strip.

4.3 AMERICAN INSTITUTE OF STEEL CONSTRUCTION

4.3.1 Specification for the Design, Fabrication and Erection of Structural Steel for Buildings

4.3.2 Code of Standard Practice for Steel Buildings and Bridges

4.3.3 Specification for Structural Joints using ASTM A-325 or A-490 Bolts

4.4 MISCELLANEOUS

4.4.1 Code of Federal Regulations (CFR) - Title 29 CFR, Part 1910, "Occupational Safety and Health Standards"

4.4.2 National Electrical Code NFPA No. 70

4.4.3 American National Standard Institute "Lightning Protection Code" NFPA No. 78

4.4.4 Department of Transportation Federal Aviation Circular AC70/7460-1F, "Obstruction Marking and Lighting"

4.4.5 Department of Transportation Federal Aviation Circular AC150/5345-43B, "FAR/DOD Specification L-856, High Intensity Obstruction Lighting Systems"

4.4.6 American National Standard Institute "Building Code Requirements for Minimum Design Loads in Buildings and Other Structures" A58.1

4.4.7 Structural Welding Code - American Welding Society (AWS) D1.1

4.4.8 Steel Structures Painting Council SSPC SP-6-63 Commercial Blasting Cleaning

4.4.9 National Association of Architectural Metal Manufacturers Designation WD-19-4

4.4.10 API Standard No. 650, Welded Steel Tanks for Oil Storage

4.4.11 ASME Section IX, Welding and Brazing Qualifications

4.5 The aforementioned specifications shall govern except where such requirements are less conservative than the comparable requirements of this Specification, in which case this Specification shall govern.

5.0 SUPPLEMENTAL DATA

5.1 DEFINITIONS

5.1.1 Owner's Superintendent

"Owner's Superintendent" is the Owner's authorized field representative assigned to this project so designated in writing by the Owner. He is responsible for the acceptance or rejection of material and equipment supplied in accordance with this Specification, upon delivery to the plant site.

5.1.2 Owner's Project Manager

"Owner's Project Manager" is the Owner's Representative assigned to manage this project. He is responsible for the project direction, control and coordination.

5.1.3 Specification

"Specification" includes this document and all provisions, appendices, and attachments hereto and all drawings furnished by the Consulting Engineer required for the successful completion of the work specified herein.

5.2 DRAWINGS

For the purposes of this Specification, Engineering Drawings will be those furnished by the Consulting Engineer, and Contractor Drawings will be those supplied by the Contractor.

6.0 VENDOR DATA

6.1 DETAILED INFORMATION REQUIRED WITH PROPOSAL

6.1.1 (No. Later) copies of the Pricing Data Sheets.

6.1.2 (No. Later) copies of the Contractor Drawings showing all features of the work, determined in accordance with this Specification. The Contractor Drawings shall include, but not be limited to the following:

a. Shell thickness and outside diameter at base, breeching entrance, brick liner details at base and at top of shell.

b. Minimum percent of reinforcing steel at each of the above sections.

c. Total load imposed on the shell.

d. Maximum horizontal and vertical load and maximum overturning moment at top of foundation.

e. Preliminary details of brick liner system.

f. Detailed design of expansion joint located above breeching entry.

g. General layout and coverage of access platforms.

6.1.3 Contractor's Construction schedule and Estimated Labor Manhours.

6.1.4 Exceptions and Alternates.

6.1.5 A copy of the Contractor's quality program to be used in the performance of the work.

6.1.6 A list of all Subcontractors.

6.1.7 KVA power consumption requirements for both construction and permanent power.

6.1.8 A summary outline of the Contractor's Job Safety Program.

6.2 DETAILED INFORMATION REQUIRED AFTER AWARD OF THE CONTRACT

6.2.1 The following information will be required by the Owner after award of the contract.

a. Final foundation loads and dowel arrangements.

b. Contractor drawings for approval.

c. Final "Certified Drawings" for records and distribution.

d. Welding procedures including program requirements for weld testing, welder qualifications, NDE procedures and all other procedures required by this Specification shall be submitted to the Owner for approval prior to use. Sufficient time shall be allowed for the Owner to complete his review and approval prior to commencement of the work.

-279

e. Quality Records as required by the Owner and/or Owner's Engineer.

f. (No. Later) copies of operating instructions are required for the permanent obstruction lighting system.

f. An up-to-date index of all Contractor Drawings shall be submitted to the Owner periodically.

6.3 APPROVAL OF CONTRACTOR DRAWINGS

6.3.1 Drawing Approval

Approval of the Contractor Drawings constitutes approval as to size and assembly, general dimension and external clearances only. This approval does not relieve the Contractor of the responsibility for accuracy of the detail dimensions as interpreted from the Engineering Drawings and field measurements. Approval also does not relieve the Contractor of responsibility for the structural integrity and/or serviceability of designs, materials and equipment furnished to meet the service conditions as stated in the technical specifications.

6.3.2 Contractor Drawing Requirements

The Contractor Drawings shall show the concrete thickness at all points, the size, location and details of all reinforcing steel; details and locations of all accessory items and openings; details and locations of all platforms and support steel; details of brick liner; and all detail electrical requirements.

6.3.2.1 The Contractor Drawings shall include a Contractor document number to be assigned by the Owner's Engineer at the time the Contractor Drawings are submitted for approval.

6.4 DRAWING APPROVAL PROCEDURES

6.4.1 (No. Later) prints of Contractor Drawings for review and/or approval shall be sent prepaid to:

(LATER)

6.4.2 One sepia of Contractor Drawings for review and/or approval shall be sent to:

Gilbert/Commonwealth International Inc.
209 E. Washington Avenue
Jackson, Michigan 49201

Attention: (Later)

6.4.3 Only checked Contractor Drawings shall be submitted for approval.

6.4.4 The Consulting Engineer will check the Contractor Drawings. One copy of the checked Contractor Drawings will be returned to the Contractor either approved, approved with comments or not approved. Contractor Drawings approved shall be returned in accordance with the drawing schedule. Contractor Drawings approved with comments shall be corrected and returned in accordance with the drawing schedule. Contractor Drawings not approved shall be resubmitted for approval in accordance with this Article. The resubmittal may be waived by the Owner.

6.5 MICROFILM

6.5.1 All prints and reproducibles shall be of such quality as to be suitable for microfilm reproduction.

6.5.2 All microfilming shall be done in accordance with "Drafting Guide for Microfilm," NMA MS102.

6.6 FINAL DISTRIBUTION OF INFORMATION

6.6.1 All original shop detail drawings, erection drawings and bills of material prepared by the Contractor shall become the property of the Owner and shall be shipped prepaid upon completion of the work to:

(Later)

7.0 <u>DESIGN REQUIREMENTS</u>

7.1 SERVICE CONDITIONS

7.1.1 This chimney will be receiving gases which have been processed by a dry electrostatic precipitator. The air quality control system has been designed such that the gases entering the flues will have the characteristics listed below.

GAS CONDITIONS PER FLUE

Condition Entering Flue	100% Load - Per Unit
Gas Flow, M^3/sec (acfm)	784 (1,661,765)
Gas Velocity, M/sec fps	22.5 (74)
Gas Density at Entrance lb/ft^3	0.0498 - 0.0504
Inlet Flue Pressure, mm w.g. (inches w.g.)	(+127mm to -254mm) (+5" to -10")
Total Wet Gas, Kg/sec (lb/hr)	(Later)
Dry Gas, Kg/sec (lb/hr)	5.42×10^2 (4.3×10^6)
Water Vapor, Kg/sec (lb/hr)	43.4 (344,000)
Sulfur Dioxide, Kg/sec (lb/hr)	2,762 (6,090)
Operating Gas Temperature, 150°C - 180°C	(300 - 355)
Maximum Temperature Excursion, 345°C	(653F) for 30 minutes

7.2 SHELL DESIGN CRITERIA

7.2.1 The chimney shall be considered as a vertical cantilever fixed at the base.

7.2.2 The following values shall be used.

7.2.2.1 Concrete compressive strength shall be for design purposes 27,576 kPa (4,000 psi), Ec = (3.64 kPa x 10^6 psi).

7.2.2.2 All reinforcing steel shall be ASTM Designation A615 Grade 60 with a minimum yield point strength of 413,685 kPa (60,000 psi).

7.2.2.3 An earthquake magnitude of Zone 1 (Zone Coef "Z" = .3) and a use factor "U" = 2.0 shall be used for shell design.

7.2.3 The chimney shall be designed for a static wind pressure in accordance with Table 4.2.1 column headed 146 kg/M^2 (30 psf) of ACI 307 specification.

7.2.3.1 The following maximum unit stresses (psi) are permitted for static winds:

Type of Stress	Static WL	1.5 WL
Max Tension in A615 Grade 60 Steel	103,421 kPa (15,000 psi)	344,738 kPa (50,000 psi)
Max Compression in Concrete	6,894 kPa (1,000 psi)	13,788 kPa (2,000 psi)

7.2.4 Dynamic wind forces shall be analyzed using the following factors:

Damping Ratio $B = .04$

Strouhal Number $S = \frac{(F)\ (D\ )}{V_C} = .2$

Where: F = calculated frequence of the fundamental mode of the chimney in cycles/second.

D_C = the outside diameter of the chimney at a point about 1/6 to 1/3 down from the top.

V_C = critical velocity in feet/second.

The resultant transverse resonant wind force f_r shall be assumed to be $f_r = C_L \frac{(pVc^2)}{2} D \sin w\ t$.

Where: f_r = Newtons/meter of height (pounds per foot of height).
p = Mass density of the air, Kg - sec^2/M^4 (lb - sec^2/ft^4)
D = outside diameter at any elevation, M (ft.)
w = natural frequency of the mode considered, radians per second.
C_L = lift coefficient (assume = 0.66)

7.2.4.1 The following maximum unit stresses Kg/cm^2 (psi) are to be used in designing for resonant wind loads:

Type of Stress	Resonant WL	1.25 R WL
Max Tensile Stress	206,843 kPa (30,000 psi) (w/o liner)	413,685 kPa (60,000 psi) (w/o liner)

in A615 Grade 60 Steel	131,539 kPa (22,500 psi) (w/liner)	344,738 kPa (50,000 psi) (w/liner)
Max Compressive	13,788 kPa (2,000 psi) (w/o liner)	34,470 kPa (3,000 psi) (w/o liner)
Stress in Concrete	17,235 kPa (1,500 psi) (w/liner)	14,288 kPa (2,500 psi) (w/liner)

The load factor of 1.25 is considered necessary due to the uncertainties in selecting values for E and B.

7.2.5 Temperature and combined stresses shall be computed at each section in accordance with the reference specifications using a maximum inside flue gas temperature of 149°C (300°F) and minimum outside ambient temperature of 5°C (41°F).

7.3 DESIGN CRITERIA - BRICK LINER

7.3.1 The differential temperature of 5°C (40°F) from one side of the brick liner to the opposite side shall be considered to exist in the liner starting at the centerline of the breeching entrance to the liner and uniformly decreasing to an equal temperature in a distance up the liner equal to 8 liner inside diameters.

7.3.2 The brick liners and steel flues shall be designed to withstand without crippling or ovaling a change in pressure from 381mm (+15 inches) W.G. to -254mm (-10 inches) W.G. (Such cycle may be caused by an explosion in the steam generator system with resulting implosion condition in the liner). This pressure loading condition shall be considered to exist in the liner for a distance of 61 meters (200 feet) above the breeching entrance and thereafter diminish uniformly to atmosphere pressure at 122 meters (400 feet) above the breeching entrance.

7.3.3 The Contractor shall select, in addition to the dead weight of the liner, earthquake and wind loads, the combination of the above criteria that provides the worst design conditions.

7.3.4 The brick liner shall have a minimum inside diameter of 6 meters (19.7 feet).

8.0 PERFORMANCE REQUIREMENTS

None

9.0 MATERIALS OF CONSTRUCTION

9.1 CHIMNEY SHELL

9.1.1 Concrete

9.1.1.1 The cement used shall conform to the requirements of the Standard Specification for Portland Cement ASTM Designation C150, Type I. The same type and brand shall be used throughout the construction of the shell. All concrete aggregates shall conform to the requirements of the Specification for Concrete Aggregates ASTM Designation C33. The maximum size of aggregate shall be not larger than 1/8 of the narrowest dimension between forms, nor larger than 1/2 of the minimum clear spacing between reinforcing bars.

9.1.1.2 The concrete mix shall be designed for a minimum compressive strength of 316.5 Kg/cm^2 (4,500 psi) at 28 days. No concrete used in the shell shall have a water content exceeding 19 liters (five gallons) per sack of cement, and the maximum slump shall be 100mm (4 inches), measured at the time of placement. Concrete in the shell shall contain entrained air in accordance with reference Specification ACI 211.1. Entrained air content shall be maintained between 4% and 6% based on measurements made on concrete immediately before placing in forms.

9.1.1.3 The Contractor shall submit the concrete mix design and mix test results to the Consulting Engineer for review prior to the start of work. Design mix testing is to be performed by the same independent testing laboratory to be retained for the production work.

9.1.1.4 The Owner shall review the use of and amounts to be used of all admixtures. Admixtures used in the mix to attain certain desired results must conform to all provisions and test methods of the applicable ASTM Specification.

9.1.1.5 Fly ash in reasonable quantity, may be used as an admixture to the concrete mix subject to the requirements of Paragraph 9.1.1.4 of this Specification.

9.1.1.6 A curing compound shall be applied to both the interior and exterior surfaces of the chimney shell for its full height. This curing compound shall not be contaminated, diluted or

altered in any way prior to application and shall be "L & M Cure" as manufactured by L & M Construction Chemical Company, 8316 Blondo, Omaha, Nebraska, or Owner approved equal. This material shall be applied in accordance with the manufacturer's instructions.

9.1.2 Forms and Details of Construction

9.1.2.1 Forms and details of construction shall be in accordance with ACI-307 except that:

a. If forms for the chimney shell shall be removed and reset each day, the height of any section shall not exceed 2.28 meters (7 feet - 6 inches).

b. Under no circumstances shall the point of discharge of the concrete into the forms be more than 1.2 meters (4 feet) above the concrete surface upon which it is being deposited.

c. Care shall be taken to avoid and prevent any staining of the chimney shell exterior surface as a result of rusting of the formwork, lifting rigs and other erection equipment.

9.1.2.2 Beam Pocket Openings

Beam pocket penetrations through the concrete shell other than at the roof elevation shall be covered with closure plates of Type 302 stainless steel.

9.1.2.3 Shell Revisions

Any revisions to the completed shell structure such as additional openings, revised openings due to construction misplacement or additional inserts shall be subject to review by the Owner prior to the start of work.

9.1.2.4 Shell Centerlines

Type 302 stainless steel exterior insert plates shall be provided on the south and east sides of the shell 1.77 meters (5 feet - 6 inches) above finish grade. The plates shall be scribed with a vertical line on the true centerline of the chimney.

9.1.3 Reinforcement

9.1.3.1 All reinforcing shall be deformed billet steel bars meeting the requirements of the "Standard Specification for Deformed and Plain Billet-Steel Bars for Concrete Reinforcement," ASTM Designation A615 Grade 60.

9.1.3.2 Reinforcement shall be detailed and placed in accordance with the requirements of the ACI 307 as listed in the reference specifications.

9.1.3.3 (No. Later) copies of certified mill test reports (CMTR) for reinforcing steel shall be retained and made available to the Owner upon demand.

9.1.4 Platforms and Ladders

9.1.4.1 Platforms and ladders, including all inserts, bolts, angle handrail and floor grating shall be provided and installed in accordance with the dimensions, sizes, details and locations shown on the Contractor Drawings and reference Codes and Standards.

9.1.4.2 All platforms and ladders except as noted below shall be fabricated from structural steel meeting the requirements of ASTM A36, and shall be hot-dipped galvanized in accordance with ASTM A123.

9.1.4.3 The top platform, roof plate, hood railing and accessories exposed to the weather shall be fabricated from ASTM-A167 Designation Type 316L solid stainless steel as shown and noted on the Engineering Drawings. Beam pocket openings in the shell at the roof elevation shall be covered with stainless steel screens.

9.1.4.4 All grating shall be standard welded grating with 25mm x 4.7mm (1 inch x 3/16 inch) bearing bars on 30mm (1-3/16 inch) centers with cross bars at 100mm (4 inch) centers. The grating shall comply with the National Association of Architectural Metal Manufacturers Designation WD-19-4, and shall be hot-dipped galvanized in accordance with ASTM A123. The maximum grating span for the above specified standard grating shall be 1.2 meters (4 feet-0 inch).

9.1.4.5 The main ladder shall be provided with a safety device, Saf-T-Climb, as manufactured by Air Space Device Inc., or Owner approved equal, with safety belts and rail inserts to allow wearer to engage rail at all platforms including rest platforms. Two safety harnesses shall be provided.

9.1.5 Doors

9.1.5.1 Doors including frame and hardware, fabricated from ASTM A666 Type 304 stainless steel, shall be provided in the chimney shell for servicing the aircraft obstruction lights and photo-cells.

9.1.5.2 One .9m x 2.1m (3 feet x 7 feet) Mandoor and frame of Standard Industrial Type shall be provided at the base of the chimney at the location shown on the Engineering Drawings.

9.1.5.3 One 3.65m x 4.26m (12 feet x 14 feet) roll-up door shall be provided at the base of the chimney at the construction access opening. The internally mounted roll-up door shall be motor operated with hand-chain backup. The curtain shall be of curved, windlocked steel slates, designed to withstand a wind pressure of 14,061 Kg/m^3 (20 pounds per square foot), galvanized with a coating of zinc of not less than 381.4 g/m^2 (1.25 oz. per square foot) flat metal and finished with the manufacturers standard baked on enamel. The door shall have weathertight seals at the head and jambs, and an astragal seal at the bottom. The door shall be of standard construction similar to Kinnear Mfg. Co., Columbus, Ohio, J. G. Wilson Corporation, Norfolk, Virginia or Owner-approved equal.

9.1.6 Vents

Vent openings shall be provided through the chimney shell, nominally 609mm x 609mm (2 feet wide by 2 feet high), located as shown on the Engineering Drawings. The vents shall be equipped with manually operated galvanized mild steel louvers as manufactured by the Airolite Company, or Owner-approved equal.

9.2 INDEPENDENT BRICK LINER

9.2.1 Material and Details

a. The chimney shall be lined as shown on the general arrangement drawing with a self-supporting, solid hard burned shale brick meeting the requirement of ASTM C279 Type H except that maximum water absorption shall be limited to between 3 and 4 percent.

b. The lining brick shall be laid in Corlok B, an acid-resisting potassium silicate cement as manufactured by Pennwalt Corporation or Owner-approved equal. The material is to be mixed and used strictly in accordance with the manufacturer's specifications including the three

coat acid wash application required upon completion of the brick work. The minimum thickness of liner shall be 8 inches.

c. The brick lining shall be externally reinforced for its full height with 76mm x 9.5mm (3 inch x 3/8 inch) mild steel sectional bands spaced on 1.5 meters (5 foot) centers. At the flue opening channel buckstays shall be provided to permit band attachment. All steel work of the lining bands and buckstays shall be given two coats of Koppers Company super service black or Owner-approved equal.

d. There shall be installed completely around the flue opening a 9.5mm (3/8 inch) thick steel plate frame. The frame is to be anchored to the concrete shell by means of inserts and bolts and is to extend through the full thickness of the shell and brick lining.

e. The top of the chimney shall be surmounted with a Type 316L stainless steel flue extension as shown on the general arrangement drawing. It is to be anchored to the masonry work by means of stainless steel bolts. The flue extension is to be constructed with a smooth exterior surface so as to reduce the possibility of fly ash build-up. After fabrication is complete, the entire surface of the flue extension shall be chemically cleaned using a passivation process in accordance with the recommended procedures of the manufacturer of the stainless steel.

f. A monolithic concrete floor slab supported on steel beams shall be furnished and installed just below the flue opening. The entire top surface of the slab inside of the chimney shell shall have a continuous gastight 3.1mm (1/8 inch) thick sheet lead covering.

g. The brick liner shall contain two breeching openings with their centerlines at right angles to one another, as shown on the bid drawings.

h. The Contractor shall supply and install all liner gas manual sampling flanged openings located at the monitor elevation as indicated on the Engineering Drawings.

9.3 LIGHTNING PROTECTION AND GROUNDING

9.3.1 The chimney shall have a complete system of lightning protection in compliance with the applicable section of the latest edition of NFPA No. 78 "Lightning Protection Code." The

general requirements for lightning protection shall be as shown on the Engineering Drawings.

9.3.2 All isolated metallic parts shall be connected to lightning down conductors or chimney ground system. All connections to the lightning down conductors shall be made with bolt tension type connectors of the size and type manufactured for this use.

9.3.3 The support steel for each platform shall be bonded to the chimney lightning protection system at three locations. Reinforcing steel, ladders, flue(s) and steel framing shall be bonded to lightning system conductors at top and bottom.

9.3.4 Each down conductor (4/0 AWG minimum) shall terminate at a flush grounding plate, similar to Cadweld type B-164 with a ground terminal, similar to Bundy type QQA. The grounding plate shall also accommodate two 4/0 AWG ground risers, per plate. These risers are connected to the ground electrodes. At each grounding plate, a 6.3mm (1/4 inch) copper bus 50mm x 304mm (2 inch x 12 inch) shall also be provided to facilitate grounding of other equipment.

9.3.5 The lightning down conductors shall be advanced with the chimney during construction and shall be temporarily connected to exposed reinforcing steel and any other steel projecting above the shell (such as a material hoist structure) to provide lightning protection while the concrete shell is being constructed.

9.3.6 Lightning protection materials shall be manufactured and installed in accordance with Underwriter's Laboratories Inc.

9.4 LIGHTING SYSTEMS

9.4.1 General

9.4.1.1 The lighting systems shall include:

a. The aircraft high intensity white obstruction lights installed on the outside of the chimney per U.S. FAA advisory circular AC 70/7460-1F.

b. The platform and ladder lighting and 220 volt duplex receptacles installed on the roof deck and on each working platform inside the chimney.

9.4.1.2 The installation of the lighting systems shall be made so that the several components parts will function together as a work-

able system. They shall be complete in every detail with all components properly adjusted and in working order. Sequence operation tests for the obstruction lighting system shall be made to insure proper operation of controls.

9.4.1.3 The work shall be executed in conformance with the best approved practices so as to contribute to the total operating efficiency, ease of maintenance, accessibility and sightliness.

9.4.1.4 The detail design and installation of conduit, cable tray, fixture installation and wiring shall be the responsibility of the Contractor.

9.4.1.5 All electrical material described in this Specification shall be furnished by the Contractor, unless otherwise noted.

9.4.1.6 Galvanized steel, rung type cable trays shall be used for the vertical runs of cable and wire. The vertical trays shall be run near the chimney ladder to provide maintenance access. Tray fill shall not exceed 30 percent; rung spacing shall not be more than 228mm (9 inches) apart and the tray shall have 100 percent loading safety factor. The wiring installed in the cable trays shall be tied to the rungs at intervals of 1.2 meter (4 feet) or less for support.

9.4.1.7 Galvanized steel conduit and fittings shall be used for that wiring which is not installed in trays, except that at the Contractor's option, he may use MI type cable runs to the platform lights in place of wire in conduit. On the roof deck, Type 316L stainless steel or Owner's approved substitute shall be used for all conduit, conduit boxes and fittings. All wire used on the chimney for power and lighting shall be 90°C (194°F) wet location, 600V, ethylene propylene rubber insulated power cable.

9.4.1.8 A #1/0 AWG stranded bare copper ground cable shall be connected from each lighting panel, control panel and transformer to the chimney ground bus. The ground cable shall be fastened to the panels or transformer case by silicone bronze bolts in a readily visible location. Other ground connections may be made with heavy duty Cadweld connectors.

9.4.1.9 Individual equipment enclosures shall be NEMA 4 except for enclosures located on the roof deck which shall be NEMA 4X.

9.4.1.10 All conduit boxes shall be galvanized ferrous material. No aluminum shall be used.

9.4.1.11 All transformers and lighting panels in the chimney shall be loaded to not more than 50 percent of the transformer nameplate rating, and the circuit breakers in the lighting panels shall be loaded to not more than 80 percent of the breaker rating. One transformer and lighting panel shall be mounted on the interior of the shell adjacent to the personnel door at grade.

9.4.1.12 All lighting panels shall have a typed circuit schedule provided by the Contractor and mounted inside the cover.

9.4.1.13 Cables and Conductors shall be identified as follows:

a. Multiconductor cables shall be identified with a typewritten marker or a white plastic sleeve with black lettering, either of which shall be covered with a transparent slipon heat shrinkable tubing. This means of identification shall cover all cable terminations including field terminations, as well as those made by panel manufacturers.

b. In the event that it is necessary to provide individual markers for each conductor of a multiconductor cable, the type of marker shall be a white plastic slipon tubing with black letters. These are sometimes referred to as "spaghetti type" markers.

c. Wiring on all panels shall be marked at both ends, that is, at the device and at the terminal block. If a wire is jumpered from one terminal to another on a terminal block, both ends shall be labeled.

9.4.2 <u>Aircraft Obstruction Lighting</u>

9.4.2.1 Temporary Obstruction Lighting During Construction

a. Any permits required for temporary warning lights during construction shall be obtained by the Contractor. The Contractor shall furnish the Owner with one copy of permit applications as submitted and as approved.

b. Temporary warning lights during construction of this chimney shall comply with Section 15e from the U.S. Department of Transportation Federal Aviation Administration's "Obstruction Marking and Lighting" Advisory Circular AC 70/7460-1F.

9.4.2.2 Permanent Obstruction Lighting:

a. Any permits required for permanent aircraft obstruction lighting required by International, Local, Federal and Aircraft Regulations shall be obtained by the Owner. The Contractor shall furnish to the Owner all drawings necessary for obtaining permits for the permanent aircraft obstruction lighting.

b. Aircraft high intensity white obstruction lighting shall be in accordance with U.S. Federal Aviation Adminstration's "Obstruction Marking and Lighting" Advisory Circular AC 70/7460-1F dated September 27, 1978. The system offered shall be U.S. FAA approved and also have the Owners approval. All obstruction lighting equipment shall meet the requirements for chimney lighting in U.S. FAA Advisory Circular AC 150/5345-43B "FAA/DOD Specification L-856, High Intensity Obstruction Lighting Systems". Wiring for this equipment shall be 90°C, wet location, 600V, ethylene propylene rubber insulated type cables.

   Suitable manufacturers are: EG & G and Flash Technology Corporation of America or Owner-approved equal.

c. Power supplied for this system will be 400 volt, 3 phase, 50 hertz.

d. This system shall be automatically controlled by means of a photoelectric control situated on the north side light fixture access door at the first level of obstruction lights.

e. All components in this system shall be so mounted that the components may be serviced from inside the chimney. Those components mounted on the roof deck shall be so located that servicing may be accomplished without undue danger or personal risk to servicing personnel.

f. Roof deck flash heads, power supply enclosures and associated hardware shall be fabricated from Type 316L stainless steel. Other flash heads, power supply enclosures and associated hardware shall be Type 304 stainless steel.

h. (No. Later) copies of operating instructions and/or parts lists are required for the permanent obstruction lighting system.

g. All obstruction lights shall be monitored in such a way that a light failure will signal an alarm through a set of normally opened and normally closed contacts for connecting to Owner's annunciator.

9.4.3 Chimney Interior Lighting System

9.4.3.1 Chimney interior lighting shall consist of shell and liner peripheral and monitor platform, lighting, roof deck lighting, ladder lighting, area near grade level and miscellaneous lighting. The below listed lighting fixtures in 9.4.3.2 through 9.4.3.4 are junction box type, 200 watt, vaportight fixtures without glass globe but with guard, except as noted. The fixture bodies shall be galvanized ferrous material such as Crouse Hinds VXHA or Owner-approved equal.

9.4.3.2 Shell Peripheral Lighting:

Platform lighting fixtures shall be mounted on the chimney concrete shell 2 meters (6 feet-6 inch) above each platform and equally spaced about 6 meters (20 feet) apart. Each shell platform except ladder rest platforms shall have one 220V, duplex plug receptacle mounted 1.2 meters (4 feet-0 inch) above the platform near the ladder.

9.4.3.3 Roof Deck Lighting:

Lighting fixtures with clear glass globes and guard shall be mounted in a vertical position on the underside of the top handrail and equally spaced about 6 meters (20 feet) apart.

9.4.3.4 Ash Service Platforms:

Lighting fixtures shall be mounted in a vertical position on the topside of the top handrail at intervals of approximately 6 meters (20 feet-0 inch).

9.4.3.5 Interior Ladder Lighting:

Ladder lighting shall start at a point approximately 6 meters (20 feet) below the roof deck level. A pair of lights shall be installed approximately every 15.2 meters (50 feet-0 inch) for the length of the ladder which runs the height of the chimney. One light shall be installed on each side of the ladder on the ladder bracket and each light shall be a 150 watt PAR-38 type spot lamp. These lamps shall be aimed at a point on the ladder about 12 meters (40 feet-0 inch) below. No conduit shall pass into or through the ladder enclosure.

9.4.3.6 Monitor Platform:

a. Vaportite fluorescent lighting fixtures shall be provided on this platform. Twelve 1.2 meters (4 feet-0 inch), two lamp fixtures shall be mounted on the chimney shell with galvanized brackets to angle fixtures toward center of chimney approximately 3.4 meters (8 feet-0 inch) above platform.

b. The Contractor shall furnish and install four 220V, duplex plug receptacles equally spaced around the inside periphery 1.2 meters (4 feet-0 inch) above the platform.

9.4.3.7 Area Near Grade Level Lighting:

a. The Contractor shall furnish and install ten Holoplane Catalog 420 (or Owner-approved equal), 200 watt fixtures with Holoplane Catalog 0230 cast junction (or Owner-approved equal) boxes equally spaced around the inside wall of the chimney 3 meters (10 feet-0 inch) above the grade level floor.

b. The Contractor shall furnish and install four 220V, duplex plug receptacles equally spaced around the Periphery 1.2 meters (4 feet-0 inch) above the grade level floor.

c. The Contractor shall furnish and install two 400V, 3 phase, single plug receptacles, one 1.2 meters (4 feet-0 inch) above the grade level floor and one 1.2 meters (4 feet-0 inch) above the flue support level platform.

d. At the outside personnel door at grade level, the Contractor shall furnish and install one Holoplane Catalog 420, 200 watt fixture (or Owner approved equal) with Holoplane Catalog 0230 cast junction box on the outside wall of the chimney 457mm (1 foot-6 inch) above the centerline of the door lintel.

9.4.4 <u>Lighting Control Center Equipment</u>

9.4.4.1 The control center for the interior lighting system and the aircraft obstruction lighting system shall be located at ground level. The interior lighting system shall include: 1) Two contactor controlled lighting panels for the ladder and platform lighting with a switch near the foot of the ladder; and 2) A contactor controlled lighting panel for the plug outlets and all lighting below the flue entry elevation with switches located near each access door. Voltage drop to the

device most remote from the control center shall not exceed 3 percent.

9.4.4.2 400 Volt, 3-Phase Distribution Panel

The distribution panel shall be weather proof with a main circuit breaker. Branch circuits are to have circuit breakers. Circuits are to be provided for: (a) aircraft obstruction lighting, (b) chimney lighting, (c) 400 volt, 3-phase receptacles, (d) sump pump, (e) motor operated door and (f) two spares.

9.4.4.3 Transformer

Indoor dry type transformers, three phase, 50 Hertz, 400 volts primary with two 5 percent full current below normal (FCBN) taps to a 220 volt secondary, 80°C (176°F) rise insulation shall be sized as noted in Section (Later). Transformer shall be suitable for wall or floor mounting.

9.4.4.4 Lighting Panel

NEMA 4 Lighting and power panel, single phase, 3 wire, 220 volts, 225 amp mains and solid neutral, main lugs for copper AWG 6 through 300 MCM, 10,000 amp IC rated, plug-in branch breakers Square D Type NQOB or Owner-approved equal. The panel shall have a minimum of 12 spare pole spaces.

9.4.4.5 Lighting Contactor

Lighting Contactors shall be electrically held, normally open, four pole and with operating coil for 200 volt AC operation.

9.4.4.6 Lighting Switches

Hubbel Hypalon Presswitches (or Owner-approved equal) single pole, 3-way or 4-way, as required.

9.4.4.7 Plug Receptacles

Hubbel, 3-wire grounding, 20 amp, 220 volt AC duplex receptacles or Owner-approved equal. Hubbel yellow "Fiberglass" lift cover-plates or Owner-approved equal.

9.4.4.8 400 Volt, 3-Phase Receptacles

The Contractor shall use 600 volt, 3 pole, 60 amps fused disconnect switches with welding receptacles compatible with existing receptacles at the facility.

9.4.5 Power Supplies

9.4.5.1 400V, 50 hertz, 3-phase Construction power within (later) meters (later) (feet) of the chimney will be provided by the Owner.

9.4.5.2 The permanent power source to the chimney will be installed and connected to the main breaker in the 400V distribution panel by others.

9.5 CHIMNEY SERVICE WATER AND DRAINAGE

9.5.1 General

The Contractor shall provide a chimney service water and drainage system. This system shall include:

9.5.1.1 A chimney sump 914mm (3 feet-0 inch) in diameter, located inside the chimney at grade as shown on the Engineering Drawings.

9.5.1.2 A sump pump similar to Goulds model 3171, or Owner-approved equal.

9.5.1.3 Piping

9.5.1.3.1 Service water piping and valves starting outside the chimney shell 1.2 meters (4 feet-0 inch) below grade, penetrating the shell and running vertically through the flue service platforms. Four service water outlets shall be provided.

9.5.1.3.2 Chimney liner drain piping shall be field run and supported by the Contractor from the 304mm (12 inch) liner drain to the chimney sump. The piping shall be 152mm (6 inch) Fiberglass Resources Kwikey A or Owner-approved equal.

9.5.1.3.3 Chimney sump pump discharge piping shall penetrate the chimney shell and run to the settling basin. The Contractor shall be responsible for connecting this piping to the pump and penetrating the chimney shell. The piping shall be 50mm (2 inch) Fiberglass Resources Kwikey A or Owner-approved equal.

9.5.1.4 A trench shall be embedded in the floor, at grade level, spanning the entire floor and discharging into the sump. This trench shall consist of a Neenah Foundry Company R-4996-A1 Series Type M Trench Frame with grated cover or Owner-approved equal.

9.5.2 Substitutions

All substitute products must be submitted to the Consulting Engineer in writing for approval.

9.5.2 Electrical

9.5.3.1 One 600 volt, 3 pole, 60 amp disconnect switch in a NEMA 12 enclosure for sump pump's 400 volt, 3-phase, 50 hertz feeder shall be provided.

9.6 EXCAVATION AND BACKFILL

9.6.1 General

9.6.1.1 The Contractor shall backfill the chimney foundation and shell to finish elevation on the outside and to the bottom of slab elevation inside.

9.6.1.2 The Contractor shall excavate and backfill trenches required for buried pipes, grounding cable and electrical conduit.

9.6.1.3 Material for backfill shall be stockpiled excavation material provided by the Owner except for pipe bedding and slab subbase which shall be clean sand fill with a compacted dry weight of not less than 1,762 Kg/M^3 (110 pounds per cubic foot) and no organic matter or other materials.

9.6.1.4 Maximum unit weight shall be determined in accordance with ASTM D-698 (Standard Proctor).

9.6.2 Chimney Backfill

9.6.2.1 Chimney backfill shall be placed in no more than 304mm (12 inch) layers and compacted with heavy vibratory equipment to 90 percent maximum unit weight. A 152mm (6 inch) layer of sand subbase shall be placed and compacted to 95 percent maximum unit weight immediately below the interior chimney slab.

9.6.3 Trench Excavation and Backfill

9.6.3.1 Trenches for buried pipe cable or conduit installation shall be excavated to no more than a 603mm (2 feet-0 inch) bottom width, with vertical walls to the top of pipe and then sloped or stepped to meet OSHA requirements.

9.6.3.2 Pipes and conduit shall be bedded in at least 152mm (6 inch) of sand and backfill with sand to at least 304mm (12 inch) above the top of pipe. The remainder of the trench shall be

backfilled with excavated or stockpiled material. All trench backfill shall be compacted in no more than 203mm (8 inch) layers to 90 percent maximum unit weight.

10.0 FABRICATION AND ASSEMBLY REQUIREMENTS

10.1 DETAILS OF FABRICATION

10.1.1 All steel plates shall be minimum of 6mm (1/4 inch) in thickness.

10.1.2 The Contractor shall provide adequate clip angles, splice plates or similar devices at all field welded joints to allow the different pieces to be securely bolted together and properly aligned before any field welding is started.

10.1.3 Prior to the start of fabrication or erection, the Contractor shall submit to the Owner the proposed welding procedures for all welding on this project for comment and/or approval.

10.1.4 Prior to the start of fabrication or erection, the Contractor shall submit to the Owner copies of welder qualification forms for all welders proposed for this work for approval. Prior qualification for work other than for this project is not acceptable. Welders holding prior qualifications must be requalified.

10.1.5 All steel plates shall have full penetration butt welds or plate depth fillet welds for all vertical and horizontal joints.

10.1.6 All steel stiffeners shall be welded to steel plates using intermittent welds on alternate centers unless otherwise shown or noted on the Contractor Drawings. Intermittent welds shall be 6mm x 50mm (2 inch) fillet welds on 152mm (6 inch) centers unless otherwise shown or noted on the Contractor Drawings.

10.1.7 Contact surfaces of bolted joints shall be smooth, flush and made continuous at corners by welding. All burrs, weld beads or other projections shall be ground off in the shop.

10.1.8 All material required for the expansion joints shall be furnished and fabricated in accordance with the details shown on the Contractor Drawings.

10.1.9 After fabrication of the stainless steel top section of the flue is complete, the entire surface of the material shall be cleaned in accordance with Paragraph (Later).

10.1.10 All bolted connections shall meet the requirements as set forth in Paragraph (Later) of this Specification.

11.0 INSTALLATION REQUIREMENTS

None

12.0 PERSONNEL REQUIREMENTS

12.1 All welding shall be done by welders qualified in accordance with the requirements of the ASME Boiler and Pressure Vessel Code, Section IX. The balance of all shop and field welding shall be done by welders qualified in accordance with the requirements of AWS "Standard Qualification Procedure."

13.0 INSPECTIONS AND TESTS

13.1 GENERAL

13.1.1 The Contractor shall cooperate with the Owner's Superintendent and shall permit him access to all parts of the work at all times.

13.1.2 The Contractor shall notify the Owner's Superintendent five days in advance of when the various parts are ready for inspection.

13.1.3 The Owner's Superintendent shall satisfy himself that all requirements of this Specification including the reference specifications are met.

13.1.4 Authority to Reject

The Owner's Superintendent, shall have authority to reject all materials and workmanship not conforming to the Engineering Drawings and the Specification. Any defective material or workmanship found during the progress of the work shall be promptly replaced or corrected by the Contractor to the satisfaction of the Owner.

13.1.5 Liability for Defective Material or Workmanship

If the Owner's Superintendent, through oversight or otherwise, has accepted material or work which is defective or contrary to this Specification, Engineering Drawings or the Contractor Drawings, this material or work, no matter in what stage of completion, may be rejected by the Owner.

300

13.2 CONCRETE QUALITY TESTING

13.2.1 Methods of determining strength of concrete, field tests, concrete proportions and consistency, mixing and placing and forms and details of construction shall be in accordance with the reference specifications.

13.2.2 The Contractor shall provide the services of an independent testing laboratory to perform all sampling and testing of concrete required during the progress of the work to determine whether the concrete as produced complies with the standard of quality as specified. Sets of test cylinders shall be made per the requirements of ACI-307 except that one additional cylinder shall be made for each set and tested at one day's cure. Samples from which test specimens are to be molded, shall be secured in accordance with "Standard Method of Sampling Fresh Concrete" ASTM C172. Specimens shall be made and laboratory cured in accordance with "Standard Method of Making and Curing Concrete Test Specimens in the Field" ASTM C31. Specimens shall be tested in accordance with "Standard Method of Test for Compressive Strength of Cylindrical Concrete Specimens, " ASTM C39.

13.2.3 All samples shall be made, cured, and tested in accordance with the referenced specifications, except as amended above.

13.2.4 The Contractor is required to take slump and air entrainment tests of all concrete. The slump of all concrete placed shall not exceed 100mm (4 inch). Concrete with a slump greater than 100mm (4 inch) will be rejected. Air entrainment shall be between 4 and 6 percent total air content.

13.3 WELDING INSPECTION, TESTING AND ACCEPTANCE

13.3.1 Welding inspections and tests shall be performed by the Contractor in accordance with AWS D1.1, Section 6, to quality acceptance levels defined in AWS D1.1, paragraph 8.15 for structural welding.

13.3.2 The cost of nondestructive testing and weld inspection is to be a part of the Contractor's expense. If ASNT and/or AWS qualified inspectors are not employed by the Contractor or the Contractor's subcontractor, an independent testing laboratory shall be retained by the Contractor at the Contractor's expense. All ASNT qualified inspectors for non-destructive testing are to be qualified per SNT-TC-1A level II. All inspectors used for visual weld inspection shall be qualified to AWS QC-1. The Contractor's inspectors shall <u>not</u> be involved in production work while acting as an inspector.

13.3.3 Steel plates used for any required support girder flanges shall be ultrasonically tested for laminar separation before fabrication begins in accordance with the requirements of ASTM A435 including Supplementary Requirement S1.

13.3.4 Tension flange butt welds on structural support girders and all butt welds on liner ring girders shall be ultrasonically tested for their full length.

13.3.5 Twenty percent or 304mm (12 inch) minimum of the full lengths of all ring or support girder web to flange welds shall be magnetic particle tested. Should NDE of the initial 20 percent indicate any discontinuities, the entire length of the joint shall be magnetic particle tested.

13.3.6 Critical or high stress weld areas in addition to those noted above may require nondestructive examination by magnetic particle, dye penetrant, or ultransonic methods. These areas and the required testing will be noted during Contractor drawing approval.

13.3.7 The balance of all shop and field welding for the support steel shall be subject to visual inspection. Where substandard welds occur or improper materials or procedures are noted, magnetic particle, dye penetrant, or ultrasonic tests may be ordered to determine the presence and extent of weld defects. The costs of nondestructive tests and required weld repairs shall be borne by the Contractor.

13.3.8 Removal and repair of defects shall be in accordance with AWS D1.1 for structural supports and ASME Section IX for flue welding.

13.4 QUALITY RECORDS

The Contractor shall furnish (No. Later) sets of the following records for Owner review.

13.4.1 Purchase orders (unpriced) including amendments.

13.4.2 NDE personnel qualifications.

13.4.3 In-process fabrication inspection records.

13.4.4 NDE procedures and examination results.

13.4.5 Major defect repair records.

13.4.6 Welders qualifications.

13.4.7 Welding procedure qualification records for welds not pre-qualified.

13.4.8 Welding procedures.

13.4.9 Non-conformances, defined as non-compliances with specifications and drawings.

13.4.10 Final inspection reports and releases.

13.4.11 Concrete cylinder identification, slump test records, air entrainment test records, and cylinder tests.

13.5 MANUFACTURING SURVEILLANCE REQUIREMENTS

13.5.1 The Owner shall be afforded free access to the contractor and his subcontractor or their vendor's areas of work, facilities, and records to perform surveillance and review records applicable to this contract. Access to subcontractor or vendor's facilities will be coordinated through the contractor.

13.5.2 Authority

The Owner has the authority to refuse "release for shipment" if the requirements of the procurement documents have not been fulfilled or required documentation is not available for review. Final inspections prior to shipment shall be considered a "hold point". Additional inspection hold prints shall be established and mutually agreed upon with the contractor prior to initiation or work. Should the Owner elect, a waiver of inspection will be issued to release material in lieu of a final inspection.

13.5.3 Notification

The contractor or his subcontractor shall give the Owner a minimum of five days advance notice prior to arrival at an inspection "hold point" which the Owner has specified as one which he will witness. Failure to notify the Owner in advance of a shipment, either partial or complete, shall be cause to refuse "release for shipment."

13.5.4 Acceptance

Acceptance by the Owner is limited to the acceptability of the particular material or technique being inspected and does not constitute a complete acceptance of the product or workmanship. If through oversight or otherwise, accepted material or work does not conform to requirements, it will be rejected by the Owner regardless of stage of completion. Final acceptance

will occur after arrival at the jobsite. Shipments arriving at the jobsite without a release for shipment or waiver of inspections shall be subject to refusal of acceptance and returned to shipper at shipper's expense.

13.5.5 Post-Award Document Submittals

Within 30 days after contract award, the contractor shall provide the Owner with the following:

a. Manufacturing/Fabrication schedules and flow plan which identify inspections/tests and suggest observation and/or witness points for the Consulting Engineer.

b. A list of quality records that the contractor will maintain.

c. Unpriced copies of all purchase orders or requisitions issued to subcontractors shall be submitted to the Owner as soon as they become available.

The Owner will review the above documents and will provide comments if they do not comply with applicable requirements. The contractor shall resolve all comments prior to commencing activities affected by the comments.

14.0 CLEANLINESS, CORROSION PROTECTION AND COATING

14.1 CONCRETE SHELL

14.1.1 The outside of the top 30.4 meters (100 feet-0 inch) of the chimney shell shall be painted with two coats of Endcor 700 Polyamide Cured Epoxy as manufactured by the Dampney Company, 85 Paris Street, Everett, Massachusetts 02149 or Owner-approved equal. The color shall be grey No. 701. This coating shall be applied in strict accordance with the instructions of the manufacturer.

14.1.2 The Contractor shall use extreme care and all possible measures to prevent damage to adjacent structures, equipment, vehicles, etc. from windblown spatter or drippings of paint and shall specifically be responsible for prompt settlement of all reasonable claims resulting from such paint spatter or drippings.

14.2 STRUCTURAL STEEL

14.2.1 All structural steel is to receive a surface preparation in strict accordance with SSPC-SP6, Commercial Blast Cleaning. All structural support steel is to receive one shop coat of

Carbo-Zinc 11 inorganic zinc primer as manufactured by Carboline Co. or Owner approved equal. Primer shall be applied in accordance with the manufacturers recommendations. Minimum dry film thickness shall not be less than 3 Mils.

15.0 MARKING AND IDENTIFICATION

Each item or piece shall be separately marked or tagged with a unique identifier number and the Owner's Purchase Order Number so that it may be correctly installed. Multiples of an interchangeable item (bolts, nuts, washers, etc.) shall be identified by a group identifier.

16.0 PACKAGING, SHIPPING AND STORAGE

16.1 The contractor is responsible for all packaging, shipping and storage of materials at the Plant site.

16.2 Adequate space for outside storage of materials will be provided adjacent to the construction area.

16.3 A rail siding is available for unloading rail shipments, however use of this siding must be coordinated with other plant activities.

17.0 ACCEPTANCE CRITERIA

17.1 A schedule of acceptance milestones will be developed by the Owner and the Owner's Engineer covering design, fabrication, delivery of materials, testing and construction.

LAKHRA POWER FEASIBILITY STUDY

SPECIFICATION E-1

MOTORS UNDER 200 KW

LPS/2B2991/D6

TECHNICAL REQUIREMENTS

SECTION CONTENTS

Article	Title	Page
1.0	DESCRIPTION OF WORK	1
2.0	WORK INCLUDED	1
3.0	WORK NOT INCLUDED	1
4.0	APPLICABLE CODES AND STANDARDS	1
5.0	SUPPLEMENTAL DATA	3
6.0	VENDOR DATA	3
7.0	DESIGN REQUIREMENTS	4
8.0	PERFORMANCE REQUIREMENTS	7
9.0	MATERIAL REQUIREMENTS (NONE)	9
10.0	FABRICATION AND ASSEMBLY REQUIREMENTS (NONE)	9
11.0	INSTALLATION REQUIREMENTS (NONE)	9
12.0	PERSONNEL REQUIREMENTS (NONE)	9
13.0	INSPECTIONS AND TESTS	9
14.0	CLEANING, CORROSION PROTECTION, AND COATING	10
15.0	MARKING AND IDENTIFICATION	10
16.0	PACKAGING, SHIPPING, AND STORAGE	11
17.0	ACCEPTANCE CRITERIA	11

ATTACHMENTS

Motor Data Sheet - up to 200 KW
Specification Exceptions

SPECIFICATION E-1
TECHNICAL REQUIREMENTS
MOTORS UNDER 200 KW

1.0 DESCRIPTION OF WORK

The Work to be performed consists of designing, fabricating, testing and delivering electric motors. The motors will be used for utility power plant service at two 350 MW power plants for the Water and Power Development Authority (WAPDA) to be located in Pakistan.

2.0 WORK INCLUDED

The Work to be performed shall include all motors sized under 200 kW and furnished with the driven equipment. These motors shall be suitable for use on a 3-phase, 50 Hertz system complete with all features, accessories, and other related work required by this Specification, including:

a. Sole plates and holddown bolts between the motor and sole-plate when specified.

3.0 WORK NOT INCLUDED

3.1 The following items are not included in the requirements of this section, but will be accomplished by others:

a. Foundations.

b. Labor and equipment for unloading, handling, and installation at the jobsite.

3.2 UTILITIES AVAILABLE

The following utilities are available at the jobsite:

a. 220-volt, single phase, 50 Hertz power.

b. 380-volt, 3-phase, 4-wire, 50 Hertz power.

4.0 APPLICABLE CODES AND STANDARDS

4.1 The following codes and standards are applicable to the Work, to the extent specified herein:

a. American National Standards Institute (ANSI):

1. B3.15, "Load Ratings and Fatigue Life for Ball Bearings (AFBMA 9)."

2. B3.16, "Load Ratings and Fatigue Life for Roller Bearings (AFBMA 11)."

3. B4.1, "Preferred Limits and Fits for Cylindrical Parts."

4. C1, "National Electrical Code", Articles 500, 501, and 502.

b. Institute of Electrical and Electronics Engineers (IEEE):

1. 43, "Recommended Practice for Testing Insulation Resistance of Rotating Machinery."

2. 85, "Test Procedure for Airborne Sound Measurements on Rotating Electric Machinery."

3. 112, "Test Procedure for Polyphase Induction Motors and Generators."

4. 114, "Test Procedure for Single Phase Induction Motors."

5. 303, "Recommended Practice for Auxiliary Devices for Motors in Class 1, Group A, B, C, D, Division 2 Locations."

c. National Electrical Manufacturers Association (NEMA):

1. MG 1, "Motors and Generators."

Part 1, "Definitions."

Part 2, "Terminal Markings."

Part 10, "Ratings."

Part 11, "Dimensions."

Part 12, "Tests and Performance."

Part 14, "Application Data."

Part 18, "Definite-Purpose Motors and Generators."

2. MG 2, "Safety Standard for Construction and Guide for Selection, Installation and Use of Motors and Generators."

3. MG 13, "Frame Assignments for Alternating -Current, Integral -Horsepower Induction Motors."

5.0 SUPPLEMENTAL DATA

The documents listed on the contents page as attachments are applicable to the Work, to the extent specified herein.

6.0 VENDOR DATA

6.1 The Vendor shall furnish data in accordance with the requirements indicated on the attached Vendor Data Requirements and Submittal Schedule.

6.2 The Vendor data furnished in accordance with paragraph 6.1 shall be as follows:

a. Motor outline drawings which shall be fully dimensioned and include the following details:

1. Location and size of terminal box.

2. Location and size of conduit openings, pipe connections, and grounding pads.

3. All accessories shown and identified in their correct location.

4. Direction of rotation.

5. Total weight.

6. Location of lifting lugs.

b. Complete motor nameplate information as specified in NEMA MG1-10.38.

c. Completed Motor Data Sheet shall be supplied with outline drawing for approval.

6.3 Detailed operating and maintenance manuals shall be furnished covering the following equipment and information:

a. Complete information for motor storage, installation, assembly, disassembly, operation, and maintenance.

b. Complete bills of material and spare parts lists for each type of motor, including manufacturer, type, and catalog numbers for accessories.

c. Instructions for lubrication and disassembly of motor bearings, including at least two recommended manufacturers and designations for both lubricant and replacement bearings.

d. Repetitive starting duty limitations which should be observed to prevent motor overheating.

7.0 DESIGN REQUIREMENTS

7.1 The motors shall be designed, manufactured, and tested in accordance with applicable requirements of NEMA MG 1.

7.2 TYPE AND VOLTAGE RATING

Continuously rated, squirrel cage induction motors shall normally be furnished, except for particular applications which require a special type of motor. Motors rated 0.4 kW and above that are important to plant operation or safety shall be rated 380-volt, 3-phase, 50-hertz ac. Single-phase, 220 volt, 50-hertz ac motors may be furnished below 0.4 kW.

7.3 SERVICE CONDITIONS

The motors shall be capable of both continuous operation, and long periods of inactivity in the environmental conditions specified for the driven equipment.

7.4 MECHANICAL MOTOR BEARINGS

a. Lifetime prelubricated and sealed bearings shall be furnished on motors of 18.5 kW and smaller.

b. Ball bearings for motors larger than 18.5 kW shall be equipped with lubrication fittings and minimum pressure-relief fittings, which shall be accessible for inservice lubrication.

c. The rated life of ball and roller bearings, as defined by the Anti-Friction Bearing Manufacturers Association (AFBMA), shall be not less than 130,000 hours based on the load imposed by the driven equipment.

d. Bearings shall be constructed and provided with seals to prevent lubricant leakage along the shaft and to prevent entrance of dirt or moisture.

7.5 BALANCE AND VIBRATION

a. Motors shall be dynamically balanced. The use of low melting point materials for balance weights shall not be acceptable. Parent metal removed to achieve dynamic or static balance shall be drilled out in such a manner as not to affect the structural strength of the rotor.

b. Motors shall be balanced and aligned to have shaft runout tolerances as specified in NEMA MG 1-11.08.

c. Motors shall operate without excessive vibration from zero speed to full load speed, including acceleration and coast down. The vibration of the motor shall not exceed the amplitudes specified in NEMA MG 1-12.05 with the motor placed on an elastic mounting and tested in accordance with NEMA MG 1-12.06.

7.6 ENCLOSURES

a. Motors for application in indoor locations shall have dripproof, guarded enclosures conforming to NEMA MG 1-1.25D. Internal parts exposed to cooling air, such as air deflectors and fans, shall be of corrosion-resisting material or have corrosion-resisting plate or treatment.

b. Motors for application in outdoor locations shall be totally-enclosed, fan cooled and guarded conforming to NEMA MG 1-1.26J, or totally-enclosed nonventilated.

c. Motors for use in hazardous areas shall conform to the following parts of the National Electric Code:

Class 1 Division 1 - Paragraph 501.8a
Class 1 Division 2 - Paragraph 501.8b
Class 11 Division 1 - Paragraph 502.8a
Class 11 Division 2 - Paragraph 502.8b

d. Motors approved for hazardous areas shall exhibit nameplates marked to show the class, group, and operating temperature as required by NEC, paragraph 500-2b.

e. Totally-enclosed motors shall have drain plugs and breather facilities. Cooling fans, screens and grilles, covers over the enclosure to form air passages, and bolts, studs or other fastening devices on the outside of the enclosure, shall be made of corrosion resisting materials or be plated or treated with corrosion resisting material.

7.7 GROUNDING

a. For motors 18.5 kW and below, a tapped threaded hole shall be provided on the motor frame for bolting ground connectors to the motor frame. The hole shall be drilled and tapped for 6mm (1/4 inch), 20 UNC thread, to accommodate connectors for both 2-gage (AWG) and 6-gage (AWG) stranded copper wire.

312

b. For motors above 20 kW, a tapped threaded hole shall be provided in each of two grounding surfaces located on diagonally opposite sides of the motor frame for bolting ground connectors to the motor frame. For motors up to 4.5 kW, the holes shall be drilled and tapped for 6mm (1/4 inch), 20 UNC thread, to accommodate connectors for both 2-gage (AWG) and 6-gage (AWG) stranded copper wire. For motors 55 kW and above, two holes shall be drilled and tapped for 13mm (1/2 inch), 13 UNC thread, to accommodate a connector for 4/0-gage (AWG) stranded copper wire.

7.8 CONDUIT BOXES

Conduit boxes shall be gasketed and of diagonal-split construction or equivalent. It shall be possible to rotate the boxes through 360° in steps of 90°. Minimum dimensions and usable volumes shall be as required by NEMA MG 1-11.06, and conduit openings shall be as follows:

Motor Size (KW)	Conduit Size mm (inches)
Below 0.8	19 (3/4)
0.8 to 15	25 (1)
18.5 to 22	32 (1 1/4)
30 to 37	38 (1 1/2)
45	50 (2)
55 to 90	75 (3)
above 90	100 (4)

7.9 LIFTING PROVISIONS

Lifting lugs or eyebolts shall be included on motors weighing more than 20Kgs (45 lb).

7.10 VERTICAL MOTOR REQUIREMENTS

a. The bottom ventilating openings of dripproof vertical motors shall be guarded by baffles or located so as to prevent the direct entrance of liquids that might be released by causes such as pump seal failure.

b. Where a hollow shaft is provided, employing a sectional drive shaft with screwed joints, the motor shall be equipped with a nonreverse ratchet or a self-release coupling to disconnect it from the driven equipment upon reversal of rotation. For motors installed in hazardous locations, the ratchet or coupling shall be of nonsparking construction.

7.11 SPACE HEATERS

Space heaters shall be furnished with NEMA frame size 254T motors and larger. Space heaters shall have sufficient capacity and be located as required to prevent condensation when the motor is not in operation. They shall be suitable for a 220-volt, single-phase ac supply.

7.12 ELECTRICAL MOTORS:

a. Insulation system

1. Motors shall have Class B, Class F, or Class H insulation systems, as required according to the application.

2. The insulation system shall be nonhygroscopic and shall withstand without damage commonly encountered contaminants, moderately abrasive particles, and conductive dust.

b. Leads and Terminals

1. The motor leads and terminals shall be marked and identified in accordance with MG1, part 2.

2. Terminal blocks provided for OWNER'S connections to accessory equipment shall be suitable for ring tongue lugs.

3. Terminal blocks and leads for accessory equipment operating at 50 volts or lower shall be rated for 300-volt service. Terminal blocks and leads for accessory equipment operating above 50 volts shall be rated for 600-volt service.

8.0 PERFORMANCE REQUIREMENTS

The motors, when installed and functioning, shall meet or exceed the following performance requirements:

8.1 SERVICE CONDITIONS

Motors shall be suitable for operation in accordance with their ratings under the following service conditions:

a. Ambient temperature:

1. Maximum: 50°C (122°F)

2. Minimum: 5°C (40°F)

b. Altitude: 40 meters (130 feet)

8.2 STARTING DUTY

a. Motors shall as a minimum start and accelerate their driven equipment in accordance with NEMA MG1-1.50.A3 with 90 percent voltage at the motor terminals.

b. The motors shall be designed, built and adequately braced for across-the-line starting with 110 percent of rated voltage applied at the motor terminals. No starting compensators shall be used or required.

c. Motors that are essential to unit startup or shutdown shall, with 70 percent rated nameplate voltage at the terminals, start and accelerate their driven equipment to running speed without overheating.

8.3 TORQUE

The accelerating torque developed by the motor at the specified minimum voltage shall be at least 10 percent in excess of the driven equipment requirement at any speed from zero to the speed corresponding to breakdown torque.

8.4 SERVICE FACTOR

Totally enclosed motors shall have a service factor of 1.0 and dripproof motors shall have a service factor in accordance with NEMA MG 1-12.47. All motors shall be sized to have at least a 15 percent capacity margin above the kilowatt requirement of the driven equipment. Normal operational conditions shall not encroach on this 15 percent margin.

8.5 TEMPERATURE RATINGS

Motors shall be rated for operation in an ambient temperature of 50° C (122°F). Motor insulation system shall have a temperature rating equivalent to or higher than NEMA Class B. At rated load, the temperature rise by resistance shall not exceed that specified in NEMA MG 1-12.41, and 12.42 for Class B insulation. Higher temperature rise motors may be bid, as an alternate, if they are more economical on the basis of initial and operating costs.

8.6 NOISE LEVEL

The sound pressure level of the motor noise shall not exceed 90 dBA when measured 1 meter (3 feet) horizontally from the major surfaces of the motor at a height of 1.5 meters (5 feet)

315

above the mounting plane on the A scale of a standard sound-level meter at slow response.

8.7 EFFICIENCY

Motors to be supplied with driven equipment shall be the Vendor's premium efficiency grade motors. Standard line or less efficient motors will not be acceptable.

9.0 MATERIAL REQUIREMENTS

None

10.0 FABRICATION AND ASSEMBLY REQUIREMENTS

None

11.0 INSTALLATION REQUIREMENTS

None

12.0 PERSONNEL REQUIREMENTS

None

13.0 INSPECTIONS AND TESTS

The motors shall receive the following routine inspections and tests:

a. Three-phase motors shall be given a routine (commercial) test to demonstrate that it is free from mechanical and electrical defects. This test shall include:

   1. Measurement of no load current.

   2. Determination of locked rotor current.

   3. High potential test performed in accordance with NEMA MG 1-3.01 using test voltages specified in NEMA MG 1-12.03.

   4. Inspection of bearings.

   5. Winding resistance measurements.

   6. Vibration check.

   7. Air gap measurement.

b. Fractional kilowatt, single-phase motors shall be tested in accordance with IEEE 114.

14.0 CLEANING, CORROSION PROTECTION, AND COATING

14.1 CLEANING

Parts shall be free from dirt, scale, and unwanted grease. The equipment shall be handled throughout production and packaging so that no foreign matter will be introduced into or onto the equipment and impair its mechanical or electrical operation.

14.2 CORROSION PROTECTION AND COATING

Nonmachined metal surfaces shall be thoroughly chemically cleaned and treated for rust prevention. The painting procedure shall include the Vendor's standard prepaint treatment, primer, and finish coats.

15.0 MARKING AND IDENTIFICATION

15.1 Each package, skid, box, and crate shall be marked on the outside with the following information so that it is readily visible:

a. Owner's name
Project identification
Street address
City, state, and country

b. The Owner's purchase order number.

c. Any special instructions for handling.

d. The weight of the box, crate, etc.

e. The Engineer assigned tag number(s) and Bill of Material number(s).

15.2 Each motor shall have a permanently affixed data plate made from stainless steel, permanently imprinted with at least 4mm (5/32 inch) high letters, and shall contain the following information

a. Motor nameplates shall include all information specified in NEMA MG1-20.60 and ANSI C50.41, subparagraph 27.1, and shall also describe the repetitive starting duty limitations which should be observed to prevent overheating.

b. The motor nameplate shall identify the relationship between motor terminals, phase sequence, and motor rotation. Motors having unidirectional fans shall be furnished with a permanent marker on the motor frame indicating the direction of rotation.

15.3 The data plate shall be located where it is readily visible and shall be securely attached with stainless steel machine screws.

16.0 PACKAGING, SHIPPING, AND STORAGE

16.1 Packaging and shipping shall meet ANSI N45.2.2, Sections 2.7, 3 (including appendix A3), 4.1, 4.2, 4.3, and 4.4. The classification required by Section 2.7 for the items specified herein is level B. (This equipment is not intended for use in a nuclear power plant; ANSI N45.2.2 is referenced only because it is a comprehensive and accepted standard.)

16.2 The Vendor shall furnish a schedule of shipping packages, including weights, dimensions, and an accurate, complete description of contents.

17.0 ACCEPTANCE CRITERIA

The Vendor shall make sure that he has complied with the following requirements before he submits the Work for acceptance:

a. The Vendor shall obtain an "Approved" status from the Owner for the Vendor drawings required in paragraph 6.2.

b. The Vendor shall be able to distribute operating and maintenance manuals in accordance with paragraph 6.3 prior to equipment delivery.

UP to 200 KW
MOTOR DATA SHEET

1. GENERAL DATA

Driven Equip. _____ Tag No. _____

Motor Mfgr. _____ Drawing No. _____ Tag No. _____

Type _____ Frame No. _____ Serial No. _____

2. PHYSICAL DATA

Horiz. _____ Vert. _____ Assembly Symbol _____ Enclosure _____

Bearing Type _____ Lubricant _____

Rotation: CW _____, CCW _____, Dual _____, Net Weight _____ Kg (lb)

3. RATINGS, PERFORMANCE DATA, AND ELECTRICAL PROPERTIES

kW _____ Duty _____ Service Factor _____

Full Load Speed _____ R/min, NEMA Design Letter _____

Voltage _____ Phase _____ Hertz 50

Full Load Amps _____ Locked Rotor Amps _____

NEMA Code Letter _____ Insulation Class _____

Safe Stall Time: at Normal Operating Temp. ____, at 50° C ____ (122°F)

4. ACCESSORIES AND SPECIAL FEATURES

Space Heaters: Volts _____ Watts _____

Special Features: _____

_____

_____

_____

SPECIFICATION EXCEPTIONS

Motors Under 200 KW

The bidder certifies that the bid is complete and in absolute agreement with the requirements of this Specification, except as specifically stated below. (Use additional sheets if required.)

_____
(BIDDER'S NAME)

_____
MANUFACTURER'S NAME)

_____
(QUOTATION NUMBER)

Attest: _____
(SIGNATURE)

_____
(TITLE)

LAKHRA POWER FEASIBILITY STUDY

SPECIFICATION E-2

MOTORS 200 KW AND OVER

LPS/2B2998/D8

LAKHRA POWER FEASIBILITY STUDY
SPECIFICATION E-2
MOTORS 200 KW AND OVER

SECTION CONTENTS

ARTICLE	TITLE	PAGE
1.0	DESCRIPTION OF WORK	1
2.0	WORK INCLUDED	1
3.0	WORK NOT INCLUDED	1
4.0	APPLICABLE CODES AND STANDARDS	2
5.0	SUPPLEMENTAL DATA	3
6.0	VENDOR DATA	3
7.0	DESIGN REQUIREMENTS	5
8.0	PERFORMANCE REQUIREMENTS	14
9.0	MATERIAL REQUIREMENTS	16
10.0	FABRICATION AND ASSEMBLY REQUIREMENTS	16
11.0	INSTALLATION REQUIREMENTS (NONE)	16
12.0	PERSONNEL REQUIREMENTS	16
13.0	INSPECTIONS AND TESTS	16
14.0	CLEANING, CORROSION PROTECTION, AND COATING	18
15.0	MARKING AND IDENTIFICATION	18
16.0	PACKAGING, SHIPPING, AND STORAGE	19
17.0	ACCEPTANCE CRITERIA	19

SPECIFICATION E-2
MOTORS 200 KW AND OVER

1.0 DESCRIPTION OF WORK

The Work to be performed consists of designing, fabricating, testing and delivering electric motors. The motors will be used for utility power plant service at two 350 MW power plants for the Water and Power Development Authority (WAPDA) to be located in Pakistan.

2.0 WORK INCLUDED

The Work to be performed shall include all motors 200 KW and greater which are furnished with the driven equipment. These motors shall be suitable for use on a 3-phase, 50 Hertz system complete with all features, accessories, and other related work required by this Specification, including:

a. Sole plates and holddown bolts between the motor and sole-plate when specified.

3.0 WORK NOT INCLUDED

3.1 The following items are not included in the requirements of this section, but will be accomplished by others:

a. Foundations.

b. Labor and equipment for unloading, handling, and installation at the jobsite.

c. Differential protection relays for motors rated 2,200 kW and above.

3.2 UTILITIES AVAILABLE

The following utilities are available at the jobsite:

a. 220-volt, single-phase, 50 Hertz power.

b. 380-volt, 3-phase, 4 wire, 50 Hertz power.

c. 6,600 volt, 3-phase, 50 Hertz power.

4.0 APPLICABLE CODES AND STANDARDS

4.1 The following codes and standards are applicable to the Work, to the extent specified herein:

a. American National Standards Institute (ANSI):

1. B3.15, "Load Ratings and Fatigue Life for Ball Bearings (AFBMA 9)."

2. B3.16, "Load Ratings and Fatigue Life for Roller Bearings (AFBMA 11)."

3. B4.1, "Preferred Limits and Fits for Cylindrical Parts."

4. C1, "National Electrical Code", Articles 500, 501, and 502.

5. C50.10, "General Requirements for Synchronous Machines."

6. C50.26, "Test Procedure for the Evaluation of Sealed Insulation Systems for AC Electric Machinery Employing Form-Wound Stator Coils" (IEEE 429).

7. C50.41, "Polyphase Induction Motors for Power Generating Stations."

b. Institute of Electrical and Electronics Engineers (IEEE):

1. 43, "Recommended Practice for Testing Insulation Resistance of Rotating Machinery."

2. 85, "Test Procedure for Airborne Sound Measurements on Rotating Electric Machinery."

3. 112, "Test Procedure for Polyphase Induction Motors and Generators."

4. 115, "Test Procedure for Synchronous Machines."

5. 303, "Recommended Practice for Auxiliary Devices for Motors in Class 1, Group A, B, C, D, Division 2 Locations."

c. National Electrical Manufacturers Association (NEMA):

1. CB1, "Brushes for Electrical Machines" (ANSI C64.1).

2. MG1, "Motors and Generators":

   (a) Part 1, "Definitions."

   (b) Part 2, "Terminal Markings."

   (c) Part 3, "High-Potential Tests."

   (d) Part 10, "Ratings."

   (e) Part 11, "Dimensions."

   (f) Part 12, "Tests and Performance."

   (g) Part 20, "Induction Motors."

   (h) Part 21, "Synchronous Motors."

3. MG2, "Safety Standard for Construction and Guide for Selection, Installation and Use of Electric Motors and Generators."

5.0 SUPPLEMENTAL DATA

The documents listed on the contents page as attachments are applicable to the Work, to the extent specified herein.

6.0 VENDOR DATA

6.1 The Vendor shall furnish data in accordance with the requirements indicated on the attached Motor Data Sheets.

6.2 The Vendor data furnished in accordance with paragraph 5.0 shall be as follows:

a. Motor outline drawings which shall be fully dimensioned and include the following details:

   1. Location and size of terminal box.

   2. Location and size of conduit openings, pipe connections, and grounding pads.

   3. All accessories shown and identified in their correct location.

   4. Direction of rotation.

   5. Total weight.

325

6. Location of lifting lugs.

7. Shaft runout tolerance.

8. Diameter of rotor and size of opening for rotor removal.

9. Rotor end play and bearing clearances (sleeve bearing motors).

10. Separate outline drawing for opposite hand motors.

11. Identification of bearings and instruments insulated against shaft currents.

12. Shaft and keyway dimensions and tolerances, including motor half coupling bore.

13. Foundation design data, baseplate, and anchor bolt details.

b. Complete motor nameplate information as specified in NEMA MG1-20.60 and ANSI C50.41, subparagraph 27.1.

c. Completed Motor Data Sheet shall be supplied with outline drawing for approval.

d. A complete set of motor curves as follows:

1. Speed vs torque and speed vs current curves for the motor at 100 percent voltage and at the lowest starting voltage level for which the motor is designed.

2. Speed vs torque curves shall include a plot of the driven equipment speed vs torque requirements.

3. No-damage thermal curve with an explanation of how the thermal safety margin was obtained.

e. The following information shall be provided for vertical motors:

1. Natural frequency.

2. Center of gravity.

3. Deflection at center of gravity.

6.3 Detailed operating and maintenance manuals shall be furnished covering the following equipment and information:

a. Complete information for motor storage, installation, assembly, disassembly, operation, and maintenance.

b. Complete bills of material and spare parts lists for each type of motor, including manufacturer, type, and catalog numbers for accessories.

C. Instructions for lubrication and disassembly of motor bearings, including at least two recommended manufacturers and designations for both lubricant and replacement bearings.

d. Repetitive starting duty limitations which should be observed to prevent motor overheating.

e. Manufacturers' instructions for accessory equipment, including device internal wiring diagrams and contact developments.

7.0 DESIGN REQUIREMENTS

7.1 TYPE

The motors shall be single-speed, 3-phase, squirrel-cage induction type, designed for across-the-line starting.

7.2 RATINGS

a. kW and speed:

The output rating shall be expressed in kW available at the shaft at a specified speed, frequency, and voltage. The required output rating and synchronous speed shall be as required by the driven equipment.

b. Time rating:

The motors shall be rated on a continuous duty basis.

c. Voltage and frequency:

1. The rated voltage for 200 kW motors and above shall be 6,600 volts.

2. The rated frequency shall be 50 Hertz.

7.3 MECHANICAL

a. Bearings:

1. Horizontal motors:

(a) Split-sleeve bearings shall be furnished on horizontal motors having frame sizes of 200 kW and larger.

(b) Ball bearings may be furnished on totally enclosed horizontal motors.

2. Vertical motors:

(a) Vertical motors shall have ball- or sleeve-type guide bearings.

(b) Vertical motors shall have thrust bearings designed to carry axial thrust conditions.

(c) Plate thrust bearings shall have dial-type temperature detectors.

3. Sleeve bearings:

Sleeve bearings shall have the following features:

(a) Clearance in accordance with the manufacturer's standards.

(b) Split bearings with split-end shields on the drive or coupling end of horizontal motors to facilitate bearing replacement without uncoupling the driven equipment or removing the bottom bearing bracket.

(c) Precision-machined dowels, rabbet fittings, or equivalent, to provide positive, accurate alignment and prevent rotation of the bearing shells.

(d) Two oil rings and means for observing oil-ring rotation while the motor is operating.

(e) Oil fill and drain connections, with magnetic drain plug.

(f) Oil sight gages, marked for standing and operating levels. The gages shall be of a

material that is unaffected by exposure to sunlight.

(g) The bearing housings shall have oil reservoirs of sufficient depth to serve as settling chambers.

4. Antifriction bearings:

(a) Antifriction ball and roller bearings shall have a rating life of at least 120,000 hours, based on the load imposed by the driven equipment. Rating life shall be as defined by ANSI B3.15 and B3.16.

(b) Grease-lubricated bearings shall be factory prelubricated and fitted with pressure-relief fittings, which shall be accessible for inservice lubrication.

5. General:

(a) Bearings shall be provided with seals and constructed so as to prevent lubricant leakage along the shaft and to prevent entrance of dirt or moisture.

(b) Motors and bearings shall be designed and constructed in a manner which will prevent the circulation of damaging shaft currents.

b. Lubrication system:

1. When a forced-feed lubrication is supplied with the motor, the system shall include:

(a) A duplex oil filter to permit change without shutdown.

(b) A pressure controller and bypass relief valve, if the oil pump is a positive-displacement type.

(c) Pressure gage downstream of the filter, dial thermometer to indicate oil temperature, and sight flow indicators for each bearing.

(d) A pressure switch with low-pressure alarm and trip contacts suitable for 140 volts, 0.5 ampere dc inductive.

(e) An oil flow indicator, including a flow switch rated 140 volts, 0.5 ampere dc inductive, which shall be used to activate an alarm or trip circuit.

2. The lubrication system shall have sufficient surge capacity to absorb, without overflowing, all the oil returned from the bearings when the motor is stopped.

c. Balance and vibration:

1. Motors shall be dynamically balanced. Low-melting-point materials shall not be used for balance weights. Parent metal removed to achieve dynamic or static balance shall be drilled out in such a manner as not to affect the structural strength of the rotor.

2. Motors having shaft diameters of 125mm (5 inches) or smaller shall be balanced and aligned to have shaft runout tolerances as specified in NEMA MG1-11.08.

3. Motors shall operate without excessive vibration from zero speed to full speed, including acceleration and coast-down. Motor vibration shall be measured in accordance with and shall not exceed the limits imposed by ANSI C50.41, Section 24, with the motor placed on an elastic mounting, as specified in IEEE 112.

d. Rotor end play:

1. Horizontal sleeve-bearing motors rated 200 kW or larger shall be provided with 12mm (1/2 inch) minimum motor rotor end play. Motors below these ratings shall have 6mm (1/4) inch) minimum end play.

2. Horizontal sleeve-bearing motors shall be designed so that the rotor does not ride continuously against either bearing due to thrust developed by the motor during uncoupled operation.

3. The motor end play shall be indicated on the motor outline drawings. Shaft position when electrically centered and end play limits shall be scored on the motor shaft extension.

4. The coupling end of horizontal motor shafts shall be made smooth-faced, with no indentations, by the addition of a plate on the shaft end face.

e. Air gap:

The distance between stator and rotor shall be uniform. Access for gaging the air gaps shall be at a minimum of three points, not less than 90 degrees apart, in each end of the sleeve-bearing motors. Totally enclosed motors may have access on the drive or coupling end only. Access shall be available without disturbing the bearing housing.

f. Cooling:

Unidirectional, shaft-mounted fans shall be coordinated with the direction of rotation required by the driven equipment.

g. Enclosures:

1. Type:

The type of enclosure shall be as required for the application.

2. Weather-protected Type II motors:

Weather-protected Type II motors shall conform to NEMA MG1-1.25H and the following:

(a) Ventilating openings and passages shall be contained within the motor enclosure. Motors shall be suitable for mounting on conventional foundations or bedplates.

(b) Enclosures shall be designed to facilitate rust removal and spray painting of the motor interior without breaking any welded joints.

(c) Screened drain holes shall be provided at locations in the enclosure where water may collect.

(d) Bolts, studs, and other fastening devices on the outside of the motor enclosure shall be made of corrosion-resisting material or be plated or treated with corrosion-resisting material.

(e) Where motor-terminal leads or space-heater leads pass outside the motor enclosure, or where exposed directly to inlet air contaminants in the runs from the stator to the terminal boxes, leads

shall be carried in rigid steel conduit, or equal.

(f) Terminal boxes shall be watertight. Boxes shall be made of cast iron, cast steel, steel sheet, or steel plate and shall have hubs or threaded openings for rigid conduit. Boxes made of steel sheet or steel plate shall have a minimum wall thickness of 3mm (1/8 inch).

(g) The bearing housing at the shaft extension end of grease-lubricated motors shall have a rotating, labyrinth-type seal with the rotating portion of the seal made of bronze or a similar corrosionresistant material. The bearing housing at the shaft extension end of oil-lubricated motors shall have a seal to prevent moisture and dirt from entering the housing along the shaft. Housings for ball or roller bearings shall have inside bearing caps.

3. Totally enclosed motors:

Totally enclosed motors shall be fan-cooled and guarded, conforming to NEMA MG1-1.26J and the following:

(a) Cooling fans, screens and grills, covers over the enclosure to form air passages, and bolts, studs and other fastening devices on the outside of the enclosure shall be made of corrosion-resisting materials or be plated or treated with corrosion-resisting material.

(b) Fan covers shall be made of cast iron, cast steel, or steel plate. Covers made of steel plate shall have a minimum thickness of 3mm. The air-intake opening shall be guarded by a grill cast or formed integral with the cover or by a metal screen made of corrosionresisting material.

(c) Sheet metal covers or wrappers used over the motor enclosure to form air passages shall be made of steel or stainless steel of 3mm minimum thickness.

(d) Totally enclosed motors shall have breather facilities and means for continuously draining condensed moisture from the motor interior.

4. Drip-proof Motors

Drip-proof motors shall have fully guarded enclosures with screens conforming to NEMA MG1-1.25D. Internal parts exposed to cooling air, such as air defectors and fans, shall be corrosion-resisting material or have corrosion-resisting plate or treatment.

5. Hazardous area motors:

(a) Motors for use in hazardous areas shall conform to the following parts of the National Electric Code:

(1) Class I, Division 1 - Paragraph 501-8a.

(2) Class I, Division 2 - Paragraph 501-8a.

(3) Class II, Division 1 - Paragraph 502-8a.

(4) Class II, Division 2 - Paragraph 502-8b.

(b) Motors approved for hazardous areas shall exhibit nameplates marked to show the class, group, and operating temperature as required by NEC, paragraph 500-2B.

6. Air filters:

(a) Dry, disposable or cleanable filters shall be furnished for weather-protected and forced-ventilated motors. The filters shall be adequately sized and braced to withstand pressure surges on motor starting.

(b) Where filters are provided, the filter frames shall be designed to permit filter replacement while the motor is in service. Pressure differential devices shall be provided to detect and alarm a clogged filter.

h. Terminal boxes:

1. The 6,600 volt motor-terminal boxes shall be Type I having minimum dimensions and usable volumes one

size larger than required by ANSI C50.41, Table 5. The boxes shall have a gasketed diagonal joint or equivalent, and it shall be possible to rotate them through 360 degrees in steps of 90 degrees.

2. Accessory leads shall terminate in a terminal box or boxes separate from, but on the same side as the motor-terminal housing. Leads of accessory items normally operating at voltages of 50 volts (rms) or lower shall be separated from other accessory leads by a suitable barrier or shall be terminated in a separate box.

3. Hazardous area motors shall have terminal boxes classified as required.

i. Grounding:

Two tapped and threaded holes shall be provided in each of two grounding surfaces located on diagonally opposite sides of the motor frame for bolting ground connectors to the motor frame. The ground connections shall be located on a part of the motor frame not normally disassembled during operation or servicing.

j. Vertical motor requirements:

1. Vertical motor design shall be such that the natural frequency of the coupled motor and driven equipment shall be at least 25 percent above the motor r/min for low-speed motors (1,000 r/min and below), and at least 25 percent below the motor r/min for high-speed motors (above 1,000 r/min).

2. Where a hollow shaft employing a section drive shaft with screwed joints is provided, the motor shall be equipped with a self-release coupling to disconnect it from the driven equipment upon reversal of rotation, or a nonreverse ratchet. For motors installed in hazardous locations, only ratchets of a nonsparking construction, or bolted couplings shall be employed.

k. Lifting provisions:

Motors shall have lifting lugs or provisions for the attachment of lifting slings.

1. Soleplates:

Motors 200 kW and above shall be equipped with soleplates. Holddown bolts between the motors and the soleplate shall be furnished.

7.4 ELECTRICAL

a. Insulation system:

Motors shall have Class B, or Class F insulation systems with their associated temperature rises.

b. Leads and terminals:

1. The motor leads and terminals shall be marked and identified in accordance with NEMA MG1, Part 2.

2. The Vendor's lugs shall have NEMA two-hole pads, double-indent barrel, and an inspection slot to allow verification of correct conductor insertion.

3. Terminal blocks provided for Owner's connections to accessory equipment (such as thermocouples, resistance temperature detectors, current transformers, and space heaters) shall be suitable for use with ring tongue lugs.

7.5 ACCESSORIES

a. Space heaters:

Space heaters shall be furnished for all motors. The space heaters shall have sufficient capacity and be located as required to prevent condensation when the motor is not in operation. They shall be suitable for 220 volt, single-phase supply.

b. Current transformers:

Motors rated 2,000 kW and above shall be furnished with three self-balancing current transformers (CT's) for differential protection. The CT's shall encompass both line and neutral leads and shall be of the accuracy class C-400. The secondary leads from the CT terminals shall have 14 gage (AWG) minimum, stranded, copper conductors.

c. Surge capacitors:

Motors 200 kW and above shall be furnished with rotating machine surge capacitors, integrally mounted in the terminal box.

d. Bearing temperature detectors:

Motors rated 375 kW and above shall be furnished with dual-element, bearing thermocouples. The thermocouple sheath shall be in direct contact with the outside surface of the bearing babbit or outer race. Thermocouples shall be tip grounded, spring loaded, chromel-constantan, stainless steel sheathed, standard accuracy, complete with terminal block and head suitable for connecting the Owner's flexible conduit and shielded cable. On insulated bearings, the tip grounding feature is not applicable. Where insulated-tip designs are required to limit shaft currents, the Vendor shall obtain the Engineer's approval.

e. Stator temperature detectors:

Motors rated 375 kW and above shall be furnished with six 10-ohm (at 25°C) copper, externally grounded, resistance temperature detectors (RTD's) which shall be embedded in the stator winding. The RTD leads shall be brought out to a separate terminal box for the OWNER'S shielded-type cable connection.

8.0 PERFORMANCE REQUIREMENTS

The motors, when installed and functioning, shall meet or exceed the following performance requirements:

8.1 SERVICE CONDITIONS

Motors shall be suitable for operation in accordance with their ratings under the following service conditions:

a. Ambient temperature:

1. Maximum: 50°C (122°F)

2. Minimum: 5°C (40°F)

b. Altitude: 40 meters (130 ft)

8.2 VARIATION FROM RATED VOLTAGE AND FREQUENCY

a. The motors shall be capable of starting, accelerating, and driving the driven equipment with variations in voltage and frequency in accordance with ANSI C50.41, Section 14, without damage and without stalling.

b. Essential motors shall successfully start and accelerate their driven equipment to running speed with 70 percent rated nameplate voltage at the terminals without overheating.

NOTE: Essential motors or those motors which if unable to start, would limit the output of the boiler.

8.3 TORQUE

a. Induction motors shall have normal torque characteristics in accordance with ANSI C50.41, Section 11, unless the driven equipment requires otherwise.

b. The accelerating torque developed by the motor at the specified minimum voltage shall be at least 10% in excess of the driven equipment requirement at any speed between zero and the speed corresponding to the breakdown torque.

8.4 NUMBER OF STARTS

Motors shall be designed for across-the-line starting and shall be capable of making either of the starts described below, provided that the load inertia (Wk^2) and load torque during acceleration have conformed to the values listed in MG1, paragraphs 20.41 and 20.42, and that the applied voltage and frequency are those for which the motor was designed.

a. Two starts in succession, coasting to rest between starts, with the motor initially at maximum specified ambient temperature.

b. One start with the motor initially at a temperature not exceeding its rated load operating temperature.

8.5 BUS TRANSFER

The motors shall be able to withstand a bus transfer as described in ANSI C50.41, Section 15.

8.6 SERVICE FACTOR

The motors shall have a service factor of 1.0 when operated at rated voltage and frequency.

8.7 TEMPERATURE RISE

Motors shall be rated for operation in a maximum ambient temperature of 50°C (122°F). When operated at rated load, voltage, and frequency, the observable temperature rise of the various parts of the motor above the temperature of the cooling air shall not exceed the value specified in NEMA MG1, Sections 20.40 and 21.40 when measured in accordance with IEEE 112 or IEEE 115.

9.0 MATERIAL REQUIREMENTS

Except where otherwise specified hererin, materials of construction shall be the Vendor's standard which has proven satisfactory in the past and meets applicable code requirements.

10.0 FABRICATION AND ASSEMBLY REQUIREMENTS

The motors shall be fabricated and assembled in accordance with the following requirements:

a. The codes and standards stated in Article 4.0

b. The Vendor's QA/QC program.

11.0 INSTALLATION REQUIREMENTS

None

12.0 PERSONNEL REQUIREMENTS

The Vendor shall employ personnel qualified to perform the Work in accordance with the Vendor's QA/QC program.

13.0 INSPECTIONS AND TESTS

The following inspections and tests shall be performed:

13.1 The following tests and measurements shall be made at the factory on all motors:

a. No-load readings of current, power, and speed at rated voltage and frequency.

b. Measurement of winding resistance for all windings.

c. Measurement of vibration.

d. Measurement of air gap.

e. Insulation resistance test in accordance with IEEE 43.

f. Bearing inspection.

g. High potential test performed in accordance with NEMA MG1-3.01, using test voltages specified in NEMA MG1-20.47. (Surge capacitors shall be disconnected during high potential tests.)

13.2 The following tests and measurements, where required, shall be made at the factory on only the first motor of each type:

a. Determination of efficiency and power factor at 100%, 75%, and 50% of full load using the dynamometer, Method B, where possible and the segregated-loss, Method E, from IEEE 112 when Method B is not possible.

b. Determination of locked-rotor current.

c. Determination of speed-torque and speed-current curves.

d. Measurement of full load current and slip.

e. Temperature tests.

f. Measurement of airborne sound pressure and power levels in accordance with IEEE 85.

g. Dielectric absorption test and insulation resistance tests in accordance with IEEE 43.

h. Measurement of phase current unbalance which shall not exceed 3 percent at full load.

13.3 GENERAL REQUIREMENTS

a. Testing, inspection, and acceptance criteria shall conform with NEMA MG1, IEEE 112, and IEEE 115.

b. Test instruments used shall have current calibration traceable to a National Bureau of Standards primary standard or equivalent.

13.4 TEST REPORTS

a. Results of the production tests shall be accurately recorded and appropriate test reports prepared. The final reports shall include photographic or Xerox copies of all original data sheets as recorded (i.e., original handwritten record in lieu of transcribed copy). The final reports shall be reviewed by competent technical personnel who shall certify that the equipment tested meets the requirements of this Specification.

b. Certification of design tests shall contain statements of when, where, and by whom the tests were performed and shall state the results of the tests. These certifications shall be signed by a responsible employee of the Vendor.

c. The test reports shall indicate which tests codes were used in determining performance data, per IEEE 112 and 115 (e.g., Method B - dynamometer, or Method E - segregated-loss method).

14.0 CLEANING, CORROSION PROTECTION, AND COATING

14.1 CLEANING

Parts shall be free from dirt, scale, and unwanted grease. The equipment shall be handled throughout production and packaging so that no foreign matter will be introduced into or onto the equipment and impair its mechanical or electrical operation.

14.2 CORROSION PROTECTION AND COATING

Nonmachined metal surfaces shall be thoroughly chemically cleaned and treated for rust prevention. The painting procedure shall include the Vendor's standard prepaint treatment, primer, and finish coats.

15.0 MARKING AND IDENTIFICATION

15.1 Each package, skid, box, and crate shall be marked on the outside with the following information so that it is readily visible:

a. Owner's name
Project identification
Street address
City, state, and country

b. The Owner's purchase order number.

c. Any special instructions for handling.

d. The weight of the box, crate, etc.

e. The Engineer assigned tag number(s) and Bill of Material number(s).

15.2 Each motor shall have a permanently affixed data plate made from stainless steel, permanently imprinted with at least 4mm high letters, and shall contain the following information:

a. Motor nameplates shall include all information specified in NEMA MG1-20.60 and ANSI C50.41, subparagraph 27.1, and shall also describe the repetitive starting duty limitations which should be observed to prevent overheating.

b. The motor nameplate shall identify the relationship between motor terminals, phase sequence, and motor rotation. Motors having unidirectional fans shall be furnished with a permanent marker on the motor frame indicating the direction of rotation.

15.3 The data plate shall be located where it is readily visible and shall be securely attached with stainless steel machine screws.

16.0 PACKAGING, SHIPPING, AND STORAGE

16.1 Packaging and shipping shall meet ANSI N45.2.2, Sections 2.7, 3 (including appendix A3), 4.1, 4.2, 4.3, and 4.4. The classification required by Section 2.7 for the items specified herein is level B. (This equipment is not intended for use in a nuclear power plant; ANSI N45.2.2 is referenced only because it is a comprehensive and accepted standard.)

16.2 The Vendor shall furnish a schedule of shipping packages, including weights, dimensions, and an accurate, complete description of contents.

17.0 ACCEPTANCE CRITERIA

The Vendor shall make sure that he has complied with the following requirements before he submits the Work for acceptance:

a. The Vendor shall obtain an "Approved" status from the Owner for the Vendor drawings required in paragraph 6.2.

b. The Vendor shall be able to distribute operating and maintenance manuals in accordance with paragraph 6.3 prior to equipment delivery.

200 KW AND ABOVE
MOTOR DATA SHEET

1. GENERAL DATA:

   a. Driven Equipment: _____ Tag No. _____
   b. Motor Mfr. _____ Dwg. No. _____ Tag No. _____
   c. Type _____ Frame No. _____ Serial No. _____

2. PHYSICAL DATA:

   a. Horiz. _____ Vert. _____ Assembly Symbol _____ Enclosure _____
   b. Bearing Type _____ Lubricant _____
   c. Thrust Bearing Type _____ Max. Allowable Vibration _____mils
   d. Rotation: CW _____, CCW _____, Dual _____, Net Weight _____ Kg (lb)
   e. Vertical Motor: Axial Thrust _____ Kg (lb) down, _____ Kg (lb) up, _____ Kg (lb) 15 min. down

3. RATINGS, PERFORMANCE DATA, AND ELECTRICAL PROPERTIES:

   a. kW _____ Duty _____ Service Factor _____
   b. Full Load Speed _____ r/min, Torque Characteristics NT _____ HT _____
   c. Voltage _____ Phase _____ Hertz 50 Stator Res. (Calc.) _____ ohms
   d. Full Load Amps _____ Locked Rotor Amps _____
   e. NEMA Code Letter ____ Insulation Class ____ Temp. Rise (by res.) ____ ^{o}C
   f. Safe Stall Time: at Normal Operating Temp. _____, at $50^{o}C$ ($122^{o}F$)_____
   g. Power Factor: 100% Load _____, 75% Load _____, 50% Load _____
   h. Guaranteed Efficiency:* 100% _____, 75% Load _____, 50% Load _____
   i. Torque: Locked Rotor _____%, Pullup _____%, Breakdown _____%
   j. Minimum Starting Voltage: ____%, Allowable Load Wk^2 ____ Kg/m^2 (lb/ft^2)
   k. Acceleration Time at Allowable Load Wk^2: 100% volts _____s., 80% volts _____s
   l. Open Circuit Transient Time Constant (T'_o) _____s

LPS/B2998/D8

2,4,3

MOTOR DATA SHEET (Cont'd)

4. ACCESSORIES:

   a. Space Heaters: volts _____ watts _____
   b. Winding Temperature Detector Type _____
   c. Bearing Temperature Detector Type _____
   d. Differential CT Ratio _____/5 A
   e. Soleplates _____, Surge Protection _____,
      Air Filters _____ Winding RTD's _____
   f. _____

5. SPECIAL FEATURES: _____

_____

_____

_____

6. Method of cooling thrust bearings and thrust bearing losses which are not included in motor efficiency.	attach
7. Vertical motor shaft construction details, clearly showing if solid or hollow shafts are utilized.	attach
8. Number of repetitive starts without overheating per paragraph 8.4.	_____
9. General description of painting procedures and corrosion-protection procedures to be employed.	attach
10. Type of surge capacitor dielectric fluid and details of electrical characteristics, flammability, and extinguishing properties, toxicity, and bioaccumulation-biodegradation properties.	attach

SPECIFICATION EXCEPTIONS

Motors 200 KW and Over

The bidder certifies that the bid is complete and in absolute agreement with the requirements of this Specification, except as specifically stated below. (Use additional sheets if required.)

_____
(BIDDER'S NAME)

_____
MANUFACTURER'S NAME)

_____
(QUOTATION NUMBER)

Attest: _____
(SIGNATURE)

_____
(TITLE)

LAKHRA POWER FEASIBILITY STUDY

SPECIFICATION E-3

MEDIUM VOLTAGE SWITCHGEAR

LPS/2B2969/D8

346

LAKHRA POWER FEASIBILITY STUDY
SPECIFICATION E-3
MEDIUM VOLTAGE SWITCHGEAR

SECTION CONTENTS

ARTICLE	TITLE	PAGE
1.0	DESCRIPTION OF WORK	1
2.0	WORK INCLUDED	1
3.0	WORK NOT INCLUDED	1
4.0	APPLICABLE CODES AND STANDARDS	2
5.0	SUPPLEMENTAL DATA	3
6.0	VENDOR DATA	3
7.0	DESIGN REQUIREMENTS	4
8.0	PERFORMANCE REQUIREMENTS	15
9.0	MATERIAL REQUIREMENTS	15
10.0	FABRICATION AND ASSEMBLY REQUIREMENTS	16
11.0	INSTALLATION REQUIREMENTS	16
12.0	PERSONNEL REQUIREMENTS	16
13.0	INSPECTIONS AND TESTS	16
14.0	CLEANING, CORROSION PROTECTION, AND COATING	18
15.0	MARKING AND IDENTIFICATION	18
16.0	PACKAGING, SHIPPING, AND STORAGE	19
17.0	ACCEPTANCE CRITERIA	19

LAKHRA POWER FEASIBILITY STUDY
SPECIFICATION E-3
MEDIUM VOLTAGE SWITCHGEAR

1.0 DESCRIPTION OF WORK

The Work to be performed consists of designing, fabricating, testing, and delivering to the jobsite 6.9 kV metalclad indoor medium-voltage switchgear. The switchgear will be used for power distribution at two 350 MW power plants for the Water and Power Development Authority (WAPDA) to be located in Pakistan.

2.0 WORK INCLUDED

The Work to be performed shall include at least the following:

1. One lot of switchgear shall be supplied in accordance with the Specifications. The switchgear assemblies (an assembly is defined as a lineup of switchgear units connected by a common bus) shall be furnished complete with all stationary and removable elements, itemized accessories, instrument transformers, instruments, relays, switches, pushbuttons, and other devices, whether specifically called for herein or not, to provide a completely operable installation in accordance with the intent of this Specification.

2. Cable lugs for the power connections to the switchgear.

3.0 WORK NOT INCLUDED

3.1 The following items are not included in the requirements of this section, but will be accomplished by others:

a. Foundations, floor steel, bolts, and shims.

b. Unloading, field placement, and installation labor.

c. External connections to the equipment specified.

3.2 UTILITIES AVAILABLE

1. Circuit breaker operating power from the Owner's 125-volt dc battery.

4.0 APPLICABLE CODES AND STANDARDS

The following codes and standards are applicable to the Work, to the extent specified herein:

a. American National Standards Institute (ANSI):

1. C37.010, "Application Guide for AC High-Voltage Circuit Breakers Rated on Symmetrical Current Basis."

2. C37.04, "Rating Structure for AC High-Voltage Circuit Breakers."

3. C37.06, "Schedules of Preferred Ratings and Related Required Capabilities for AC High-Voltage Circuit Breakers Rated on a Symmetrical Current Basis."

4. C37.09a, "Test Procedures for AC High-Voltage Circuit Breakers."

5. C37.11, "Requirements for Electrical Control for AC High-Voltage Circuit Breakers Rated on a Symmetrical Current Basis or a Total Current Basis."

6. C37.12, "Guide Specifications for AC High-Voltage Circuit Breakers Rated on a Symmetrical Current Basis and a Total Current Basis."

7. C37.20, C37.20a (1970), C37.20b (1972), C37.20c (1974), C37.20d (1978) "Switchgear Assemblies Including Metal-Enclosed Bus."

8. C37.90, "Relays and Relay Systems Associated With Electric Power Apparatus."

9. C37.100, "Definitions for Power Switchgear."

10. C57.13, "Requirements for Instrument Transformers."

11. N45.2.2, "Packaging, Shipping, Receiving, Storage, and Handling of Items for Nuclear Power Plants."

12. Y.14.15, "Standard Drafting Practices for Electrical and Electronics Diagrams" (Section 15) in

b. National Electrical Manufacturers Association (NEMA):

1. ICS 1, "General Standards for Industrial Controls and Systems."

2. SG 4, "Alternating-Current High-Voltage Circuit Breakers."

3. SG 5, "Power Switchgear Assemblies." Supplement to ANSI C37.20.

c. American Society for Testing and Materials (ASTM):

D635, "Test for Flammability of Self-Supporting Plastics."

5.0 SUPPLEMENTAL DATA

The documents listed on the contents page as attachments are applicable to the Work, to the extent specified herein.

6.0 VENDOR DATA

6.1 The Vendor shall furnish data in accordance with the requirements indicated on the attached Vendor Data Requirements.

6.2 The Vendor data furnished in accordance with paragraph 6.1 shall be as follows:

a. Outline drawings shall show the general arrangement of the equipment to be supplied, principal dimensions, foundation requirements including anchor bolt requirements, provisions for cable entrances, where equipment will be subdivided for shipping and handling, and gross weight of each section.

b. Connection diagrams shall have the following specific characteristics relative to ANSI Y14.15:

1. Switch developments shall be given.

2. Internal connections for all units of all devices and relays shall be given.

3. Components shall be shown in their approximate relative physical positions.

4. Terminal blocks shall be shown in their relative physical position as nearly as possible.

c. The bill of material shall show in tabular form all equipment to be supplied and shall be tabulated for each cubicle. The following specific information shall be supplied as a minimum:

1. Quantity of equipment to be furnished.

2. Ratings of equipment to be furnished.

3. Manufacturer's part or catalog number of equipment to be supplied.

d. Recommended spare parts list.

e. Current transformer accuracy and thermal data and curves.

f. Handling, shipping, and storage instructions.

6.3 Detailed operating and maintenance manuals shall be furnished covering the following equipment and information:

a. Metalclad switchgear.

b. Circuit breakers.

c. Auxiliary and protective relays.

d. Control switches and indicating lights.

e. Test devices.

f. Instruments and meters.

g. Fuses.

h. Accessories.

i. Field assembly instructions.

7.0 DESIGN REQUIREMENTS

The medium-voltage switchgear shall be designed to operate under the following requirements and have the following features:

7.1 GENERAL DESIGN REQUIREMENTS

a. The switchgear shall be suitable for operation on a 6,900 volt, 50-hertz, 3-phase, 3-wire, low-resistance grounded wye system.

b. The switchgear shall be furnished complete with electrically operated circuit breakers, instrument transformers, instruments, relays, accessories (lifting motors

in each cell, if vertical lift mechanism), grounding devices, and all necessary parts.

7.2 ELECTRICAL DESIGN REQUIREMENTS

a. Main buses shall be rated for 3,000 amperes except as shown on the One Line Diagram E-1 and shall be braced for 66,000 amperes momentary, and shall be suitable thermally for 41,000 amperes for 3 seconds.

b. The switchgear will be used on a nominal 6.9 kV system.

c. Circuit Breakers:

1.	Rated maximum voltage	7.2	kV
2.	Frequency	50 hertz	
3.	Rated short circuit interrupting current at maximum rated voltage	33,000	amperes
4.	Maximum symmetrical interrupting current	41,000	amperes
5.	3-second short time rating	41,000	amperes
6.	Closing and latching capability	66,000	amperes
7.	Continuous current rating shall be in accordance with the One Line Diagram E1.		
8.	Basic lightning impulse level (BIL)	95	kV
9.	Low-frequency RMS withstand voltage	36	kV

7.3 MECHANICAL DESIGN FEATURES

a. Stationary Structures:

1. The switchgear shall be indoor, metal clad, deadfront construction. Cubicles of welded steel frames shall be bolted together to form a continuous lineup.

2. Provisions shall be made for either top or bottom entrance of the control and power cables.

3. Cubicles shall be arranged so that failure or explosion in one section will cause no more than minimal damage to any other section. Each unit structure shall be segregated by metal sheets into the following compartments:

   (a) Circuit breaker with secondary control.

   (b) Main bus.

   (c) Current transformer and primary entrance.

   (d) Potential transformer.

4. Each unit shall consist of a stationary housing and withdrawable type circuit breaker equipped with primary and secondary disconnecting devices, auxiliary switches, electrically operated mechanism, compression-type cable terminals, and current transformers as indicated. Front and rear doors shall be hinged and equipped with lockable handles (cylinder lock, keyed alike) to limit access to the circuit breaker assemblies. The doors shall be so braced that the weight of the equipment mounted thereon shall not cause any portion of the door to sag when the door is open. The door latching mechanism shall engage the cubicle at not less than three points. It shall be possible to close and latch the front doors when the circuit breaker is in the test position. A suitable latching device shall be provided to hold the doors in an open position and to protect the adjacent cubicles.

5. Relays, control switches, pushbuttons, and indicating lights, other than auxiliary devices, shall be mounted on a hinged front door.

6. The spare cubicles shall be complete, including the removable element.

7. The switchgear shall be in accordance with ANSI C37.20, Paragraphs 6.1.3.9, "Isolation"; 6.1.4.6, "Covers"; and 6.1.4.7, "Ventilation Openings and Vent Outlets."

b. Structural Material:

The stationary structure shall consist of rigid, welded, and bolted mild steel frames, completely metal enclosed with smooth and level sheets, free from flaws, and provided

with suitable braces to withstand all stresses incidental to shipping, installation, and operation without permanent deformation or other damage. The steel sheeting shall not be less than 11 gage (USS), except barriers, panels, and doors may be 14 gage (USS) in accordance with ANSI C37.20 and NEMA SG 5, Paragraphs 6.4.1 and 6.5.1, "Material and Finish."

c. Interchangeability:

Unit housings and circuit breakers shall be constructed and wired so that each breaker will be interchangeable with other breakers of similar rating. Stationary disconnects shall be adjusted to insure alignment of both primary and secondary contacts during final factory inspection.

d. Grounding:

A ground bus of at least 50mm x 6mm (2 inches x 1/4 inch) copper bar shall extend throughout the length of each switchgear lineup. Each housing shall be grounded directly to this bus. The frame of each circuit breaker shall be grounded through an approved ground contact shoe at all times, except when the primary disconnecting devices are separated by a safe distance. The ground connection shall be made before the primary disconnect contacts engage during insertion and shall be broken after these contacts break during withdrawal. Provisions shall be made at each end of the ground bus for the Owner's connection of 500 kcmil stranded, bare copper wire. Means of attaching a portable grounding device to the ground bus shall be provided.

e. Interlocks:

1. Provisions shall be made for quadruple padlocking of any breaker in the test or withdrawn position with the door open or closed to permit safe work on the circuit equipment. The padlocking shall prevent the breaker from being inserted into the operating position.

2. Interlocks shall not prevent opening of the door when the circuit breaker is closed.

3. Stationary primary contacts shall automatically be covered by shutters with the breakers in the withdrawn position.

4. A test position shall be provided in which the primary disconnect contacts are separated by a safe distance, the ground connection is still completed, all interlocking circuits are inoperative, and the breaker may be closed and tripped by the test control push-buttons mounted on the door of the circuit breaker unit.

5. The construction of the draw-out mechanism shall be such that proper alignment of primary and secondary disconnecting devices is assured throughout all positions and movement. The mechanism shall operate smoothly in and out of each position.

6. The contact surfaces of all copper disconnecting contacts shall be silver-to-silver.

f. Control Circuits:

1. Switches:

Control and instrument switches shall be heavy duty, rotary type, for either 125 volt dc or 125 volt ac service. Switches used for the instrument switches shall have black, knurled handles.

2. Indicating lights:

(a) Indicating lights shall be low-voltage resistor type.

(b) Color caps shall be as follows:

(1) Green - To indicate that the circuit breaker is open.

(2) Red - To indicate that the circuit breaker is closed.

(c) The light positions shall be green, amber, and red, left to right when viewed facing the front of the switchgear.

(d) The red indicating light shall be connected to supervise the trip coil.

g. Nameplates:

Nameplates shall be provided for all units, circuits, and circuit components in accordance with the following:

1. Nameplates shall be of laminated construction with black capital letters on a white background.

2. Nameplates shall be attached with stainless steel, Phillips-head, self-tapping screws.

3. Each switchgear lineup assembly shall have a large nameplate on the front for identification with letter heights 13mm (1 inch) minimum.

4. Front and rear of each unit shall be identified by nameplates, both inside and outside, so that the unit may be identified with the door open or closed. Letter height shall be 6mm minimum for nameplates inside the unit and 10mm minimum for nameplates outside the unit.

5. Switches, pushbuttons, indicating lamps, and potential and current transformers shall be identified by nameplates. Letter height shall be 6mm (1/2 inch) minimum.

6. Nameplates shall be located above the switches and pushbuttons, and below the indication lights, meters, and relays.

7. Fuses, auxiliary relays, terminal blocks, and other devices mounted inside the units shall be identified either by nameplates or stenciled inscriptions.

h. Power Terminations:

Design of the specific connections, terminals, and insulators shall conform to the following:

1. Connections between power buses, including connections to be made in the field because of subdivisions for shipping, shall be silver-to-silver for copper and tin-to-tin for aluminum. To insure continuing maximum conductivity, these connections shall be made with a minimum of two bolts and Belleville washers. The bolts shall be tightened to the manufacturer's specified torque values, by approved methods.

2. Terminal connections (terminals) shall be provided for all power cables entering and leaving the switchgear in accordance with ANSI C37.20, Paragraph 6.1.1.4 "Terminal (Terminal Connectors)." These terminals shall be tinned, solderless, long barrel, double indent with pad provisions for two bolts. Cable sizes will be as indicated on the attached Drawings.

3. The Engineer shall furnish to the Vendor, at a later date, cable type and the direction from which power cables will enter the switchgear units. It shall be possible to connect the cables without excessive bending. Undrilled removable top and bottom supports for the Owner's cables shall be installed, suitable for site drilling.

4. Special cable termination compartments shall be provided where necessary. Adequate space shall be provided for stress cones where required.

i. Space heaters for 220 volt, single-phase ac shall be provided in each unit to prevent excessive condensation while equipment is out of service.

j. Terminal blocks shall be provided on at least one side of all shipping splits to permit all secondary and control wiring running between these shipping splits to be connected with Vendor-supplied jumpers or pigtails.

k. Accessories:

Standard accessories for the installation and operation of the equipment shall be furnished by the Vendor, including the following:

1. Two sets of secondary couplers and extension devices for cell mounted switches.

2. Four breaker maintenance closing devices.

3. Four sets of operating mechanisms for inserting and removing the breaker from the service position.

4. Two sets of special wrenches for contacts.

5. Four test plugs for draw-out meters and relays.

6. Four removal and transport devices if required.

7. Four ampere grounding and phasing devices of the six-bushing design with two locked doors.

8. One package of bulbs for each rating of indicating lamps installed in the switchgear.

9. Three spare indicating lamp color caps for each color used.

10. Two test cabinets with all accessories, with an 3-meter (10 feet) connection cord.

11. Four hand cranks for emergency breaker withdrawal if required.

12. Four sets of portable grounding devices.

13. Six spare current-limiting potential transformer fuses.

14. Two litres (1/2 gallon) of touchup paint.

7.4 ELECTRICAL DESIGN FEATURES

a. Switchgear Bus:

1. The buses shall be made of high conductivity, flat copper or aluminum bar having round edges and shall be completely insulated. Electrical connections shall be silver-plated for copper and tin-plated for aluminum. To insure maximum conductivity, electrical connections shall be tightly bolted to manufacturer's specified torque values by approved methods.

2. The bus and the bus connections shall be completely insulated with antihygroscopic, track-resistant material possessing flame-retarding properties. In addition, the insulation shall not generate noxious and poisonous fumes when heated above the design ambient temperature. Suitable material with similar characteristics shall also be furnished for insulating bus joints between groups of units of the switchgear assembled in the field.

3. High-strength ferrous bolts will be acceptable for the high-voltage buses. The bidder shall specify the type of anticorrosion protection for the bolts.

b. Circuit Breakers:

1. The circuit breakers shall be three-pole, electrically operated, stored energy, withdrawable type air or vacuum circuit breakers with commonly recognized safety interlocks and having adequate thermal, mechanical, and electrical capability for the required service in accordance with ANSI C37.06. Each circuit breaker shall include interphase barriers, arc quenchers, mechanical and electrical trips, closing mechanism, position indicator, and operation counter, all mounted on a draw-out carriage comprising the removable element.

2. The breakers shall be mechanically interlocked so that they cannot be inserted or withdrawn when in the closed position. Any charged mechanism must be discharged before the breaker can be removed.

3. Breakers shall be trip-free throughout the entire closing operation.

4. The close and trip circuits shall have independent two-pole protective devices and shall be in accordance with ANSI C37.11. Close and trip controls shall be provided on the breaker door. These shall be operable without opening the breaker door and shall be effective only when the breaker is in the test position.

5. Operating voltage will be from 100 to 140 volts dc except for tripping and alarm functions which shall operate satisfactorily from 70 to 140 volts dc.

6. Sufficient auxiliary switches, limit switches, cell switches, and stabs shall be provided as necessary for all normal and specified control, indication, and interlocking functions as shown on elementary diagrams to be supplied to the Vendor by the Engineer. In addition, the following shall be provided on each breaker:

   (a) A total of eight spare stationary auxiliary contacts shall be provided (nominally four normally open and four normally closed contacts). Auxiliary contacts not directly connected to the breaker mechanism circuits shall be wired to the terminal blocks in the enclosure.

(b) A total of eight spare contacts mounted on the removable breaker element shall be provided (four normally open and four normally closed). Normally closed contacts of this type shall be bypassed with a cell switch which closes when the breaker is not in the operating position.

(c) Breaker compartments shall be provided with two contacts which open when the breaker is not in the operating position, to be used for remote indication that the breaker is not in the operating position.

7. General purpose auxiliary relays shall be provided with covers or, if surface mounted, in semi-flush cases. The surface mounted relays shall be mounted inside the switchgear enclosure.

8. The thermal over-current relays for all motor circuits shall be Westinghouse Type BL-1 with two units mounted in one Flexitest case. The thermal element contacts shall operate an external alarm and shall not trip their respective breakers. The instantaneous element will not be used. The instantaneous over-current relays for the motor circuits shall be General Electric Type PJC-32C with three targets and seal-in units, or approved equal, wired to trip their respective breakers. Three units shall be mounted in one draw out case. The ground detector relay for the motor and feeder circuits shall be General Electric Type PJC, or approved equal, wired to trip the respective breaker and single unit mounted in a draw out case. The differential relays for motors, 2,000 kW and over shall be General Electric Current Type PJC, or approved equal, wired to trip the respective breakers, and three units mounted in one draw out case. An after close auxiliary relay shall be furnished for all motor circuits. The over-current relays for transformer feeders shall be General Eletric Type 12IAC51 or approved equal. The ground relays shall be General Electric Type 12IAC51. The over-current relays shall be General Electric Type 12IAC66 or approved equal.

9. Each motor breaker shall have an elapse-time meter to record the number of hours each motor is operated. The elapse-time meter shall operate off the switchgear, 125 volts dc control power.

c. Potential Transformers:

1. The potential transformers shall be mounted on draw-out carriages and shall have provisions for visible automatic grounding of the high-voltage side in the withdrawn position. Potential transformers shall be in accordance with ANSI C57.13.

2. Each draw-out potential transformer shall be equipped with two current-limiting primary fuses.

3. Potential transformers shall have an accuracy classification of 0.3 or better on burdens W, X, Y and 0.6 accuracy classification for burden 3.

4. Each potential transformer shall have two fully insulated high-voltage bushings.

d. Current Transformers:

1. Current transformers shall be in accordance with ANSI C57.13.

2. Current transformers furnished in the switchgear shall have:

(a) Accuracy classes shall be as stated in ANSI C37.20, Table 6 or higher.

(b) Adequate mechanical and thermal capacities for use with equipment of the rating specified above.

e. Instruments and Relays:

1. Alternating current instruments and relays shall be suitable for operating on a 5-ampere current transformer secondary, 220 volt potential transformer secondary circuit and for operation at 50 hertz.

2. Instruments shall be semiflush mounted approximately 100mm (4 inches) square with a 250-degree linearized scale, 1% switchboard accuracy.

3. Protective relays shall be semiflush mounted of the draw-out type with integral testing facilities. Fault detection type shall be fitted with targets to indicate operation.

4. The number and type of relays required shall be in accordance with the attached Switchgear Equipment List.

5. Relay contacts, except for those for alarm functions, shall have a minimum continuous rating of 0.5 ampere, with an inrush rating of 6 amperes at 125 volts dc on an inductive load. Contacts for alarm functions shall be rated 0.2 ampere inductive at 125 volts dc, as a minimum.

6. Relays using control power shall be suitable for operation with a 125-volt (nominal) dc source. The relays, except for tripping and alarm functions shall pick up and stay energized continuously in the range of 100 to 140 volts dc. Tripping and alarm relays shall operate successfully from 70 to 140 volts dc.

7. General purpose auxiliary relays shall be protective relay grade with covers. Surface mounted relays shall be mounted inside the switchgear enclosure.

f. Fuses or Molded Case Circuit Breakers:

Fuses or molded case circuit breakers for secondary and control circuits shall be located as to be easily accessible to an operator standing at the front of the switchgear. The fuses shall be accessible after opening a hinged door. Bolted cover plates shall not be supplied. Fuses shall be mounted so that they can be safely replaced without deenergizing the switchgear.

8.0 PERFORMANCE REQUIREMENTS

The medium voltage switchgear, when installed and functioning, shall meet or exceed the design requirements listed in article 7.0.

9.0 MATERIAL REQUIREMENTS

The material specified herein shall be in accordance with the following requirements:

a. Except where otherwise specified herein, material of construction shall be the Vendor's standard which has proven satisfactory in the past and meets applicable code requirements.

b. Power buses shall be high conductivity copper or aluminum with silver- copper or tin- aluminum plated connection surfaces.

c. Control buses for dc control power shall be a minimum of 6 gauge (AWG), with stranded copper conductors.

10.0 FABRICATION AND ASSEMBLY REQUIREMENTS

The switchgear shall be fabricated and assembled in accordance with the following requirements:

a. The Vendor's QA/QC program.

11.0 INSTALLATION REQUIREMENTS

The switchgear shall be installed in accordance with the manufacturer's instructions.

12.0 PERSONNEL REQUIREMENTS

The Vendor shall employ personnel qualified to perform the Work in accordance with the Vendor's QA/QC program.

13.0 INSPECTIONS AND TESTS

The following inspections and tests shall be performed:

a. Circuit Breaker Tests:

1. The Vendor shall certify that circuit breakers of identical design, of each size and type to be supplied, have successfully passed all applicable design tests specified in ANSI C37.09 as amended by C37.09a, Paragraph 09-4, and NEMA SG 4, Part 4.

2. The circuit breakers supplied shall be production tested for their rated capability in accordance with all applicable production tests specified in ANSI C37.09 amended by C37.09a, Paragraph 09-5, and NEMA SG 4, Part 4.

b. Instrument transformers shall be tested in accordance with the requirements of ANSI C57.13.

c. The completed switchgear assemblies shall be tested in accordance with the requirements of ANSI C37.20, Paragraph 5.3. In addition, electrical tests shall be performed as follows:

1. Indicating lamps shall be checked by applying design voltage.

2. Indicators, meters, and recorders shall be checked by applying specified inputs and observing the scale deflection in accordance with ANSI C37.20, Paragraph 5.3.4.3.

3. Switches shall be tested in each switch position to verify conformance to the required switch development.

d. General Requirements:

1. Testing, inspection, and acceptance criteria shall conform to applicable codes and standards, as specified in article 4.0.

2. All test instruments used shall have current calibration traceable to a National Bureau of Standards primary standard or equivalent.

3. Wiring shall be visually examined for workmanship and conformance with the latest "approved" or "as built" drawings.

4. Screws and nuts securing wiring to terminals shall be checked for tightness.

5. Control wiring shall be tested for correctness, absence of short circuits, and continuity in accordance with ANSI C37.20, Section 5.3.4.1.

6. Control wiring shall be tested at a potential 1,500 volts to ground at 50 hertz for 1 minute in accordance with ANSI C37.20, Section 5.3.4.2 and NEMA ICS 1, Section 109.05. Meters, solid-state devices, and instruments shall be disconnected during this test.

e. Test Reports and Certification:

1. Results of the production tests shall be accurately recorded and appropriate test reports prepared. The final reports shall include photographic or Xerox copies of all original data sheets as recorded (i.e., original handwritten record in lieu of transcribed copy). The final reports shall be reviewed by competent technical personnel who shall certify that

364

the equipment tested meets the requirements of this Specification.

2. Certification of design tests shall contain statements of when, where, and by whom the tests were performed and shall state the results of the tests. These certifications shall be signed by a responsible employee of the Vendor.

14.0 CLEANING, CORROSION PROTECTION, AND COATING

14.1 CLEANING

Parts shall be free from dirt, scale, and unwanted grease. The equipment shall be handled throughout production and packaging so that no foreign matter will be introduced into or onto the equipment and impair its mechanical or electrical operation.

14.2 CORROSION PROTECTION AND COATING

a. All equipment shall be thoroughly chemically cleaned and treated for rust prevention. All equipment shall receive the Vendor's standard pre-paint treatment and primer coats.

b. The switchgear shall be finished with paint in accordance with ANSI C37.20, Paragraphs 6.4.1 and 6.5.1, "Material and Finish", including the requirements for phosphating and corrosion-resistant painting. In addition, all steel surfaces shall have a minimum of two finish coats.

15.0 MARKING AND IDENTIFICATION

15.1 Each package, skid, box, and crate shall be marked on the outside with the following information so that it is readily visible:

a. Owner's name
Project Identification
Street address
City, state, country

b. The Owner's purchase order number.

c. Any special instructions for handling.

d. The weight if the box, crate, etc.

e. The Engineer-assigned tag number(s) and bill of material number(s).

15.2 Each medium-voltage switchgear lineup and circuit breaker shall have a permanently affixed data plate made from stainless steel, permanently imprinted with at least 5mm high letters, and shall contain the following information:

a. Manufacturer's name and address.

b. Equipment type.

c. Serial Number:

d. Date of Manufacture:

e. Rated Voltage:

f. Rated Current:

g. Rated Frequency:

h. Rated Withstand Voltage:

15.3 The data plate shall be located where it is readily visible and shall be securely attached with stainless steel, Phillips-head, self-tapping screws.

16.0 PACKAGING, SHIPPING, AND STORAGE

16.1 Packaging and shipping shall meet ANSI N45.2.2, Sections 2.7, 3 (including appendix A3), 4.1, 4.2, 4.3, and 4.4. The classification required by Section 2.7 for the items specified herein is level B. (This equipment is not intended for use in a nuclear power plant; ANSI N45.2.2 is referenced only because it is a comprehensive and accepted standard.)

16.2 The Vendor shall furnish a schedule of shipping packages, including weights, dimensions, and an accurate, complete description of contents.

17.0 ACCEPTANCE CRITERIA

The Vendor shall make sure that he has complied with the following requirements before he submits the Work for acceptance:

a. The Vendor shall obtain an "Approved" status from the Owner for the Vendor drawings required in paragraph 3.06.2.

b. The Vendor shall be able to distribute operating and maintenance manuals in accordance with paragraph 3.06.3 prior to equipment delivery.

c. The Vendor shall have assembled and identified the special tools and spare parts required in article 2.04.

EQUIPMENT DATA

(CLIENT)

(PROJECT)

MEDIUM-VOLTAGE SWITCHGEAR

The bidder shall return one copy of this form with the bid, with all blanks filled in and related information attached

(BIDDER'S NAME)

(MANUFACTURER'S NAME)

(QUOTATION NUMBER)

1. Equipment descrition, performance, characteristics, features, and materials. attach

2. Accuracy class of current transformers

3. The following weights:

   a. Each type of circuit breaker Kg (lb)

   b. Each type of cubicle Kg (lb)

   c. Shipping weight of largest piece Kg (lb)

4. Description of packaging, shipping, and the extent of field assembly required. attach

5. The following drawings: attach

   a. Dimensions of installed equipment, including required aisle space and overhead clearance.

   b. Dimensions of cable entrances and wiring spaces in cubicles.

EQUIPMENT DATA

(CLIENT) _____

(PROJECT) _____

c. Aperture of window type, core balance current transformers suitable for relays specified.

d. Dimensions of largest shipping piece.

6. Time required for delivery of completed equipment, starting from date of drawing approval by Engineer. wks _____

7. Circuit Breakers:

a. Range of operating voltage over which interrupting rating applies _____

b. Maximum symmetrical interrupting capability of breaker(s) A _____

c. Maximum asymmetrical interrupting capability of breaker(s) A _____

d. Symmetrical interrupting rating of breaker(s) at rated maximum voltage A _____

e. Asymmetrical interrupting rating of braker(s) at rated maximum voltage. A _____

f. Rated interrupting time in cycles _____

g. Close and latch capability A _____

h. 3-second rating A _____

EQUIPMENT DATA

(CLIENT) _____

(PROJECT) _____

MEDIUM-VOLTAGE SWITCHGEAR

i.	Closing time from energizing closing relay until main contacts touch, at specified control voltage		_____
j.	Operating time from energizing trip coil until:		
	(1) Contact parting		_____
	(2) Interruption of arc	minimum maximum	_____ _____
	(3) Full open position of breaker		_____
	(4) Closing of early "b" auxiliary contact		_____
k.	Tripping current at specified control voltage (E/R value)	A	_____
l.	Closing current at specified control voltage (E/R value)	A	_____
m.	Range of control voltage for proper operation of coils and relays:	closing tripping	_____ _____
n.	Charging current and time to charge stored energy mechanism		_____

EQUIPMENT DATA

(CLIENT)

(PROJECT)

MEDIUM-VOLTAGE SWITCHGEAR

The bidder shall return one copy of this form with the bid, with all blanks filled in and related information attached.

(BIDDER'S NAME)

(MANUFACTURER'S NAME)

(QUOTATION NUMBER)

LAKHRA POWER FEASIBILITY STUDY

SPECIFICATION E-4

MOTOR CONTROL CENTERS

LAKHRA POWER FEASIBILITY STUDY
SPECIFICATION E-4
MOTOR CONTROL CENTERS

CONTENTS

Paragraph	Title	Page
1.0	DESCRIPTION OF WORK	1
2.0	WORK INCLUDED	1
3.0	WORK NOT INCLUDED	1
4.0	APPLICABLE CODES AND STANDARDS	2
5.0	SUPPLEMENTAL DATA	3
6.0	VENDOR DATA	3
7.0	DESIGN REQUIREMENTS	4
8.0	PERFORMANCE REQUIREMENTS	10
9.0	MATERIAL REQUIREMENTS	11
10.0	FABRICATION/ASSEMBLY REQUIREMENTS	11
11.0	INSTALLATION REQUIREMENTS (NONE)	11
12.0	PERSONNEL REQUIREMENTS	11
13.0	INSPECTIONS AND TESTS	11
14.0	CLEANING CORROSION PROTECTION AND COATING	12
15.0	MARKING AND IDENTIFICATION	12
16.0	PACKAGING	13
17.0	ACCEPTANCE CRITERIA	13

LAKHRA POWER FEASIBILITY STUDY
SPECIFICATION E-4
MOTOR CONTROL CENTERS

1.0 DESCRIPTION OF WORK

2.1.1 The work to be performed under this Specification shall include the design, fabrication, inspection, testing, packaging and delivery of 400 volt motor control centers. The equipment will be installed at two 350 MW power plants for the Water and Power Development Authority (WAPDA) to be located in Pakistan.

2.0 WORK INCLUDED

2.1 The work to be performed shall include the following:

2.2 The Motor Control Centers shall be furnished with all stationary and removable elements. The equipment shall be assembled, wired and tested at the factory and be ready for operation when delivered.

2.3 Cable lugs for incoming and feeder cables.

2.4 Special tools required for assembly and maintenance of equipment.

2.5 The services of a qualified installation engineer, if requested by the Owner, for the purpose of supervising full assembly, erection and performing final testing of equipment purchased under this Specification.

2.6 Channel mounting sills.

3.0 WORK NOT INCLUDED

3.1 The following items are not included in the requirements of this section but will be accomplished by others:

3.2 Mounting hardware.

3.3 Unloading and erection of all materials at the jobsite and receipt inspections.

3.4 Installation of all cables and buses leaving the Motor Control Centers.

3.5 Field testing.

4.0 APPLICABLE CODES AND STANDARDS

4.1 The following codes and standards are applicable to the work to the extent specified herein.

4.2 NATIONAL ELECTRIC MANUFACTURER'S ASSOCIATION (NEMA)

a. NEMA AB 1, Molded Case Circuit Breakers.

b. NEMA ICS 1-109, Test and Procedures for Electrical Equipment (1000 volts maximum).

c. NEMA ICS 6-110, Enclosures for Industrial Controls and Systems.

d. NEMA ICS 1-112, Ratings, Performance, Manufacturing and Application.

e. NEMA ICS 2-110, General Standards for Manual and Magnetic Controllers.

f. NEMA ICS 2-210, AC General-Purpose Magnetic Contractors, 600 volts or less.

g. NEMA ICS 2-321, AC General-Purpose Class A Magnetic Controllers for Induction Motors Rated in Horsepower 600 volts and less, 50 and 60 Hertz.

h. NEMA ICS 2-322, AC General-Purpose Motor Control Centers.

i. NEMA ST 1, Specialty Transformers

4.3 AMERICAN NATIONAL STANDARDS INSTITUTE (ANSI)

a. ANSI C37.50, Test Procedures for Low Voltage AC Power Circuit Breaker used in Enclosures.

b. ANSI-Z55.1, Gray Finishes for Industrial Apparatus and Equipment.

c. ANSI-Y.14.15, Standard Drafting Practices for Electrical and Electronics Diagrams (Section 15) including Supplement Y.14.15a.

4.4 Underwriter Laboratories (UL)

a. UL 845, Standard for Motor Control Centers.

5.0 SUPPLEMENTAL DATA

5.1 The documents listed on the contents page as attachments are applicable to the work and are a part of this Specification.

6.0 VENDOR DATA

6.1 The Vendor shall furnish data in accordance with the requirements indicated on the attached Vendor Data Requirements sheet.

6.2 The Vendor data furnished in accordance with paragraph 6.1 shall be as follows:

a. Outline drawings shall show the general arrangement of the equipment to be supplied, princiapl dimensions, foundation requirements including anchor bolt requirements, provisions for cable entrances, where equipment will be subdivided for shipping and handling, and gross weight of each section.

b. Connection diagrams shall have the following specific characteristics relative to ANSI Y14.15:

1. Switch development shall be given.

2. Internal connections for all units of all devices and relays shall be given.

3. Components shall be shown in their approximate relative physical positions.

4. Terminal blocks shall be shown in their relative physical position as nearly as possible.

5. Space shall be allowed for the addition of cable numbers and "from" and "to" identification of wires by the Engineer.

c. The bill of material shall show the tabular form all equipment to be supplied. The following specific information shall be supplied as a minimum:

1. Quantity of equipment to be furnished.

2. Ratings of equipment to be furnished.

3. Manufacturer's part or catalog number of equipment to be supplied.

376

d. Recommended spare parts list.

e. Handling, shipping, and storage instructions.

6.3 Detailed operating and maintenance manuals shall be furnished covering the following equipment and information:

a. Motor control center

b. Combination starters

c. Molded case breaker units, MCPs and current limiting fuses

d. Auxiliary relays

e. Thermal devices

f. Fuses

g. Field assembly instructions

7.0 DESIGN REQUIREMENTS

7.1 GENERAL DESIGN REQUIREMENTS

7.2 The Motor Control Centers shall be suitable for operation on a 400 volt, 50 Hertz, 3 phase, 3 wire system.

7.3 The complete Motor Control Centers shall be rated for 50° ($122^{o}F$) ambient temperature.

7.4 ELECTRICAL DESIGN REQUIREMENTS

7.5 CONSTRUCTION

The Motor Control Centers shall be heavy-duty type, free standing structures and shall be furnished with the following features:

a. Construction NEMA Class 12.

b. Wiring shall be NEMA Class 1 Type B.

c. Front panel-mounted combination starters and feeder breakers. All incoming bus, feeder cables, and control cables shall be front connected.

d. Isolated vertical wiring trough on side of units with a single separate hinged door on each vertical section.

e. Provisions for feeder and control cables to enter the top or bottom of the Motor Control Centers.

f. Gasketed cover plates over cable entrances.

g. Cabinets suitable for mounting against a wall or back-to-back.

h. General dimensions: Height: 2,300mm (90 inches), width: 500mm (8 inches) per vertical section, depth: 400mm (16 inches).

i. Horizontal wireways continuous throughout the entire unit, top and bottom and segregated from horizontal bus and unit compartment. Horizontal wireways shall have removable cover plates with captive screw fasteners that require a screw driver to secure.

j. Removable lifting angles or irons on each shipping section.

k. Provision for future expansion of the Motor Control Centers.

l. All electrical connections to internally wired components shall be accessible for maintenance with unit mounted in Motor Control Center structure.

7.6 BUS

a. All buses shall be aluminum, insulated or isolated with a 600 volt rating and braced for 43,000 amperes rms short circuit current with all connections tin plated. Vertical buses shall have a current carrying capacity of 300 amperes. Horizontal buses shall have a current carrying capacity of 1,200 amperes.

b. Bus shall be rated 600 volts, 3 phase ungrounded, 50 hertz for use at 400 volts.

c. Buses shall be enclosed with insulating barriers with automatic shutter to cover stab openings when units are removed.

d. Bus supports shall be nonhydroscopic, high dielectric strength and have high impact strength.

e. A ground bus shall extend the full length of each structure and be bonded to each vertical section. The bus shall be 6mm x 25mm (1/4 inch x 1 inch) copper. A solderless compression terminal for 4/0 AWG copper cable shall be provided

7.7 INCOMING CABLE COMPARTMENTS

a. An incoming cable compartment shall be furnished for terminating cables.

7.8 UNITS

a. All units shall be draw-out construction. Units shall be arranged to be withdrawn to a disconnect position and padlocked.

b. Units shall be standardized and removable. Units of the same type shall be interchangeable.

c. Separate compartments shall be provided for each combination starter unit, circuit breaker unit, wiring trough, vertical and horizontal power buses.

d. Only standard, current model equipment shall be furnished. All modifications required to meet this Contract shall be noted. Obsolete models or assemblies utilizing custom built parts are not acceptable.

e. Unused spaces shall be arranged for "future starter" and be furnished with mounting hardware and individual doors.

f. Individual unit doors shall be provided with an integral handle which is to be interlocked to prevent opening doors when circuits are energized or energizing circuits while the door is open. A means which requires a screwdriver shall be provided to bypass the interlock for maintenance.

g. A permanent nameplate shall be furnished for the front of each unit. Nameplate legends shall be as listed in the column labeled "Description" ion the attached Auxiliary Load List. One large nameplate shall be provided for each Motor Control Center.

h. A wiring diagram of the equipment contained in each unit shall be attached to the inside of each unit door.

i. Line connections to the buses shall be plug-in type designed to automatically disconnect the units when the units are removed from the Motor Control Center.

j. Circuit breakers shall be operable with the unit door closed and be provided with a padlocking provision.

k. Manual thermal overload relay resets shall be operable with the unit door closed.

7.9 COMBINATION STARTERS

a. Combination starters shall be magnetic full voltage, 3 phase, 400 volt, 50 hertz.

b. Manual reset three pole thermal overload relays shall be furnished. The overload relay contact shall open the main contactor circuit.

c. Motor circuit protectors shall have a minimum interrupting capacity at 400 volts of 22,000 amperes symmetrical. Trip range shall be provided to permit settings of 10 to 14 times motor full load current for circuit breaker types.

d. Starters shall be sized as follows:

Motor HP	Maximum kW	NEMA Starter Size
0-10	7.5	1
11-25	18.5	2
26-50	37	3
51-100	75	4
125-200	150	5
250-268	200	6

e. Reversing starters shall be electrically and mechanically interlocked.

f. Electrically held combination starters shall have the following features:

1. Three normally open and three normally closed auxiliary contacts in addition to the normally open contact used for seal-in and undervoltage protection.

2. 220 volt, single phase, 50 hertz holding coil for NEMA Sizes 1 and 2 starters with a minimum pickup voltage of 70 percent and with a dropout voltage less than 70 percent of rated voltage.

3. Control circuits shall be arranged for side fused and the other side grounded.

4. Interposing relay with 400 volt, single phase, 50 hertz holding coil shall be provided for control circuit of all NEMA Size 3 and larger starters with a pickup voltage of 70 percent or less and a dropout voltage less than 70 percent of rated voltage.

g. A transformer type red indicating light shall be connected across the primary of the control power transformer to indicate "circuit energized."

h. A 400-200 volt single phase 50 hertz control transformer, with one secondary fuse 200 VA minimum size.

7.10 COMBINATION CONTACTORS

a. Combination contactors shall be magnetic full voltage circuit breaker type, 3 phase, 400 volts, 50 hertz.

b. Molded case breakers shall have a minimum interrupting capacity at 480 volts of 25,000 amperes symmetrical.

c. Contactors shall be sized as follows:

Continuous Carrying Current (amps)	NEMA Starter Size
27	1
45	2
90	3
135	4
270	5
540	6

d. Electrically held combination contactors shall have the following features:

1. Three normally open and three normally closed auxiliary contacts in addition to the normally open contact used for seal-in and undervoltage protection.

2. 220 volt, single phase, 50 hertz holding coil for NEMA Sizes 1 and 2 contactors with a minimum pickup voltage of 70 percent and with a dropout voltage less than 70 percent of rated voltage.

3. Control circuits shall be arranged for one side fused and the other side grounded.

4. Interposing relay with 400 volt, single phase, 50 hertz holding coil shall be provided for control circuit of all NEMA Size 3 and larger contactors with a pickup voltage of 70 percent or less and a dropout voltage less than 70 percent of rated voltage.

5. A 400-220 volt, single phase, 50 hertz control transformer, with one secondary fuse 200VA minimum size.

e. A transformer type red indicating light shall be connected across the primary of the control powr trnasformer to indicate "circuit energized."

7.11 FEEDER BREAKERS

a. Feeder circuit breakers shall be rated 600 volt, three pole, 50 hertz, for use at 400 volts and manually operated with thermal magnetic trip units. Minimum interrupting capacity at 480 volts shall be 25,000 amperes symmetrical.

b. The position of the operating handle of the breaker shall clearly indicate the condition of the breaker as "ON," "OFF," or "TRIPPED."

c. A red "circuit energized" light shall be provided.

7.12 CONTROL AND POWER CABLE TERMINATIONS

a. Control leads shall be terminated on terminal blocks with individual white marking tags. All auxiliary contacts shall be wired to terminal blocks.

b. Power leads shall be terminated on heavy-duty, stud type terminal blocks in reversing starters. Power leads in nonreversing starters and in breakers shall be terminated on the respective contactor or breaker terminals.

7.13 MECHANICAL DESIGN FEATURES

7.13.1 Stationary Structures

a. The Motor Control Centers shall be free standing, metal clad, dead front construction. Cubicles of welded steel frames shall be bolted together to form a continuous line-up.

b. Provisions shall be made for either top or bottom entrance of the power and control cable.

c. Units shall be arranged and constructed so that failure or explosion in one section will cause no more than minimal damage to any other section.

7.14 STRUCTURAL MATERIAL

The stationary structure shall consist of rigid welded steel frames. The steel sheeting shall be manufacturer's standard.

7.15 INTERCHANGEABILITY

Units of the same size shall be constructed and wired so that they are interchangeable. Stationary disconnects shall be adjusted during factory inspection to assure alignment.

7.16 ELECTRICAL DESIGN FEATURES

7.16.1 Arrangement and Number of Units

a. Each MCC shall contain the bus connection, circuit breakers, combination starters, wiring terminal blocks, and nameplates.

b. The arrangement of equipment shall in no case prevent satisfactory performance and shall allow sufficient space for proper maintenance within the structure and future expansion.

c. All control wiring shall be Type SIS, minimum #14 AWG stranded, flame retardent, cross-linked polyethylene insulated single conductor copper wire rated at 600 volts and suitable for a conductor temperature of 90°C.

d. Terminal blocks shall be provided for all external control connections. They shall be a stud-type terminal block with individual terminal marking tags marked corresponding to the Vendor's Wiring Diagrams. Terminal blocks shall have at least 20 percent spare positions. No more than two wires shall be terminated to each point on the Vendor's side of the terminal blocks.

e. Power cable compression type terminations shall be furnished by the Vendor and shall be Bundy Hg-Lug Type YA sized to accommodate cables.

8.0 PERFORMANCE REQUIREMENTS

8.1 All components shall be designed and manufactured in accordance with this Specification and shall operate within their rated capacity as specified regardless of whether all necessary specific performances are set forth herein or in applicable standards.

8.2 The Vendor shall supply a complete starter system permitting operation which will correctly protect the motors from overloads and also successfully disconnect the source of power under all short circuit conditions and under abnormal conditions without damage to breakers, starters, thermal overloads and thermal overload heater elements.

9.0 MATERIAL REQUIREMENTS

Materials of construction shall be the Vendor's standard which have proven satisfactory in the past and meet applicable code requirements. Only new materials and components shall be used in the manufacture of equipment to be supplied under the Specification.

10.0 FABRICATION AND ASSEMBLY REQUIREMENTS

10.1 The Motor Control Centers shall be fabricated and assembled in accordance with the following requirements:

10.2 The codes and standards stated in Article 4.0.

10.3 The Vendor's QA/QC program.

11.0 INSTALLATION REQUIREMENTS

Not applicable.

12.0 PERSONNEL REQUIREMENTS

The Vendor shall employ personnel qualified to perform the work in accordance with the Vendor's QA/QC program.

13.0 INSPECTIONS AND TESTS

13.1 The equipment covered by this Specification shall be completely assembled in the factory and thoroughly tested in accordance with ANSI C37.50, NEMA ICS.1-109, NEMA ICS.1-112, and UL-845 listed in Paragraph 4.0 of this Specification.

13.2 With all of the combination starters and circuit breakers in place, the power conductors shall successfully withstand the dielectric test for 600 volt equipment performed in accordance with NEMA ICS 1-109.21.

13.3 Interchangeability of like units shall be demonstrated.

13.4 Physical wiring shall be checked against approved wiring diagrams.

13.5 The Owner reserves the right to inspect the materials used and the workmanship. Such inspections shall not relieve the Vendor of his obligation to furnish the items in accordance with this Specification.

13.6 The Inspector shall be permitted access to the Vendor's facilities and facilities of Subcontractors for expediting, witness testing and inspection purposes.

13.7 The Vendor shall cooperate with the Inspector and shall permit him access to all parts of the work.

14.0 CLEANING, CORROSION PROTECTION AND COATINGS

14.1 Parts shall be free from dirt, scale and unwanted grease. The equipment shall be handled throughout production and packaging so that no foreign matter will be introduced into or onto the equipment and impair its mechanical or electrical operation.

14.2 After fabrication all manufacturing wastes shall be removed from the interior of the unit. All grease, chalk or crayon paint marks and other deleterious material shall be removed from interior and exterior surfaces. At the time of shipment, the equipment shall be clean inside and outside.

14.3 The interior paint finish shall be the Vendor's standard.

14.4 The exterior surfaces shall be sprayed with an Oxide rust protective primer and two finish coats of ANSI No. 61 light gray per ANSI 255.1.

15.0 MARKING AND IDENTIFICATION

15.1 Each item or piece shall be separately indelibly marked or metal tagged with a unique identifier number.

15.2 For equipment requiring assembly, each item or piece shall be marked or tagged with the unique identifier number followed by a part assigned by the Vendor.

15.3 Multiples of an interchangeable item; i.e., bolts, nuts, etc., need not be individually identified, but they shall be identified by the unique identifier number, followed by the part number for the type and size assigned by the Vendor.

15.4 The unique identifier number shall appear on the following documents:

15.5 Vendor's drawings, including Subvendor's and Subcontractor's drawings

15.6 Bills of Material.

15.7 Correspondence.

15.8 Shipping documents including bills of lading and packaging lists.

15.9 Fabrication records, material certifications and test reports.

15.10 Each Motor Control Center lineup shall have a permanently affixed data plate made from stainless steel, permanently imprinted with at least 5mm (3/16 inch) high letters. It shall be located where it is readily visible and shall be securely attached. The following information shall be included on the data plate.

15.11 Manufacturer's name and address.

15.12 Equipment type.

15.14 Serial Number.

15.15 Date of Manufacture.

15.16 Rated Voltage.

15.17 Rated Current.

15.18 Rated Frequency.

16.0 PACKAGING, SHIPPING AND STORAGE

16.1 Packaging and shipping shall meet ANSI N45.2.2, Section 2.7.3 (including Appendix A3) 4.1, 4.2, 4.3 and 4.4. The classification required by Section 2.7 for the items specified herein is level B. (This equipment is not intended for use in a nuclear power plant; ANSI N45.2.2 is referenced only because it is a comprehensive and accepted standard.

16.2 All equipment not bolted to the structure and made a part thereof shall be packed in separate boxes. Removable units may be packaged separately if too heavy for safe shipment when assembled within the enclosing structure.

16.3 All boxes and crates shall be plainly marked as specified in Paragraph 15.0 above.

17.0 ACCEPTANCE CRITERIA

The motor control centers will be accepted after successful completion of all tests specified in Paragraph 12.0.

VENDOR DATA REQUIREMENTS

Client: _____ Inquiry No. _____

Plant: _____ Unit _____ Vendor _____

1. Bus

Main - Material, Size, Amp Rating _____
Vertical - Material, Size, Amp Rating _____
Short Circuit Bracing Amperes Sym _____
Base Supports: Describe Method of connection - Vertical to Horizontal _____

2. Combination Starters

Breaker Interrupting Capacity _____ _____
_____ _____
_____ _____
_____ _____
_____ _____

Continuous Current Rating of Contactors
Size 1 _____
Size 2 _____
Size 3 _____
Size 4 _____
Size 5 _____
Size 6 _____

Maximum Interrupting Rating of Contactor
Size 1 _____
Size 2 _____
Size 3 _____
Size 4 _____
Size 5 _____
Size 6 _____

Aux. Contact Rating of 220V ac Contactor _____
Max. No. of Aux. Contacts permissible _____
Control Terminal Block Max. No. of Points _____
Current/Volt Rating _____
Control Wiring Material (Material, Size, Insulation) Control _____
Type of Termination Power _____
Control _____

Gauge of Enclosure Steel _____

387

LAKHRA POWER FEASIBILITY STUDY

SPECIFICATION E-5

DIESEL GENERATOR

LPS/2B3716/D8

LAKHRA POWER FEASIBILITY STUDY
SPECIFICATION E-5
DIESEL GENERATOR

SECTION CONTENTS

ARTICLE	TITLE	PAGE
1.0	DESCRIPTION OF WORK	1
2.0	WORK INCLUDED	1
3.0	WORK NOT INCLUDED	1
4.0	APPLICABLE CODES AND STANDARDS	2
5.0	SUPPLEMENTAL DATA	3
6.0	VENDOR DATA	3
7.0	DESIGN REQUIREMENTS	5
8.0	PERFORMANCE REQUIREMENTS	13
9.0	MATERIAL REQUIREMENTS	13
10.0	FABRICATION AND ASSEMBLY REQUIREMENTS	13
11.0	INSTALLATION REQUIREMENTS (NONE)	13
12.0	PERSONNEL REQUIREMENTS	14
13.0	INSPECTIONS AND TESTS	14
14.0	CLEANING, CORROSION PROTECTION, AND COATING	16
15.0	MARKING AND IDENTIFICATION	17
16.0	PACKAGING, SHIPPING, AND STORAGE	17
17.0	ACCEPTANCE CRITERIA	18

ATTACHMENTS:
Summary Table 1 Diesel Engine Data
Summary Table 2 Generator Data
Summary Table 3 Excitation System
Summary Table 4 Automatic Starting System
Summary Table 5 Acoustic Data Sheet
Summary Table 6 Acoustic Data Sheet

LAKHRA POWER FEASIBILITY STUDY
SPECIFICATION E-5
DIESEL GENERATOR

1.0 DESCRIPTION OF WORK

The work to be performed consists of designing, fabricating, testing, and delivering to the jobsite one, 400 Volt A.C., Diesel Generator set to be used for emergency service. The Diesel Generator Set will be used at two 350 MW power plants for the Water and Power Development Authority (WAPDA) to be located in Pakistan.

2.0 WORK INCLUDED

a. One Emergency A.C. Diesel Generator Set, skid mounted, including diesel engine, generator, excitation system, field switch, and discharge resistor (if required), voltage regulator, governor, starting devices, automatic starting and control panel, externally mounted muffler, cooling pumps and fans, and any other necessary auxiliary equipment.

b. The equipment shall be completely assembled at the factory and tested. It shall be furnished complete with all necessary control devices and auxiliary equipment for satisfactory operation, except for the equipment to be supplied by the Owner as specifically indicated in this Specification. All equipment shall be mounted, wired and tested so that only external connections required by the Owner will have to be made.

c. The service of a qualified installation engineer, if requested by the Owner, shall be provided for the purpose of supervising field assembly, erection, and performance of testing of equipment purchased under this Specification.

3.0 WORK NOT INCLUDED

a. Foundation, floor steel, bolts, and shims

b. Unloading, field placement, and installation labor

c. External connections to the equipment specified

4.0 APPLICABLE CODES AND STANDARDS

The following codes and standards are applicable to the work to the extent specified herein.

4.1 AMERICAN NATIONAL STANDARDS INSTITUTE (ANSI)

ANSI C19.3 thru C19.7	Industrial Control Apparatus
ANSI C42.100	Dictionary of Electrical and Electronic Terms
ANSI C50.5	Rotating Exciters for Synchronous Machines
ANSI C50.10	General Requirements for Synchronous Machines
ANSI C50.12	Requirements for Salient Pole Synchronous Generation and Generator/Motors for Hydraulic Turbine Application
ANSI C50.21	Testing Insulation Resistance of Rotating Machinery
ANSI C57.13	Requirements for Instrument Transformers
ANSI N45.22	Packaging, Shipping, Receiving, Storage, and Handling of Items for Nuclear Power Plants
ANSI S1.2	Method for the Physical Measurements of Sound
ANSI Y14.15	Electrical and Electronics Diagrams
ANSI Y32.2	Graphic Symbols for Electrical and Electronics Diagrams
ANSI Z55.1	Gray Finishes for Industrial Apparatus and Equipment

4.2 INSTITUTE OF ELECTRICAL AND ELECTRONICS ENGINEERS (IEEE)

IEEE 74	Test Code for Industrial Control
IEEE 115	Test Procedures for Synchronous Machines

IEEE 446	Recomended Practice for Emergency and Standby Power Systems

4.3 NATIONAL ELECTRICAL MANUFACTURERS ASSOCIATION (NEMA)

NEMA ICS	Industrial Control Systems
NEMA MG-1	Motors and Generators

4.4 AMERICAN SOCIETY OF MECHANICAL ENGINEERS (ASME)

NEMA PTC-17	Reciprocating Internal Combustion Engines - Test Codes
NEMA PTC-26	Speed Governing Systems for Internal Combustion Engine - Generator Units

4.5 If there is a conflict between the requirements of codes or between codes and this specification, that requirement which is most stringent shall govern. In case of such conflict, the Owner's Engineer shall be notified prior to implementation of the governing requirement.

5.0 SUPPLEMENTAL DATA

The documents listed on the Contents page as attachments are applicable to the Work to the extent specified herein.

6.0 VENDOR DATA

6.1 The Vendor shall furnish data in accordance with the requirements indicated on the attached Summary Tables.

6.2 The VENDOR data shall be as follows:

a. Outline drawings shall show the general arrangement of the equipment to be supplied, principal dimensions, foundation requirements including anchor bolt requirements, provisions for cable entrances, where equipment will be subdivided for shipping and handling, and gross weight of each section.

b. Connection diagrams shall have the following specific characteristics relative to ANSI Y14.15:

1. Switch developments shall be given.

2. Internal connections for all units of all devices and relays shall be given.

392

3. Components shall be shown in their approximate relative physical positions.

4. Terminal blocks shall be shown in their relative physical position as nearly as possible.

5. Space shall be allowed for the addition of cable numbers ad "from" and "to" identification of wires by the Engineer.

c. The bill of material shall show in tabular form all equipment to be supplied. The following specific information shall be supplied as a minimum:

1. Quantity of equipment to be furnished.

2. Ratings of equipment to be furnished

3. Manufacturer's part or catalog number of equipment to be supplied.

d. Recommended spare parts list.

e. Current transformer accuracy and thermal data and curves.

f. Handling, shipping, and storage instructions.

6.3 Detailed operating and maintenance manuals shall be furnished covering the following equipment and information:

a. Diesel

b. Generator

c. Excitation System

d. Governor

e. Regulator

f. Battery and Charger

g. Field Switch and Resistor (if required)

h. Auxiliary and Protective Relays

i. Control Switches and Indicating Lights

j. Instruments and Meters

k. Field Assembly Instructions

7.0 DESIGN REQUIREMENTS

The Emergency A.C. Diesel Generator Set shall be designed to operate under the following requirements and have the following features.

7.1 GENERAL DESIGN REQUIREMENTS

a. The Emergency A.C. Diesel Generator shall have a rated continuous output of 625 kVA, 0.8 PF, 400 volts, 50 hertz, 3 phase, 4 wire. It shall have a two hour output of 110% kVA, 0.8 PF. The generator shall be connected to a 400 volt, 4 wire grounded system.

b. Enrivonmental Conditions

The equipment shall be designed for use in the following environment.

1. Ambient Temperature

(a) Maximum 50°C (122°F)
(b) Minimum 5°C (40°F)

2. Altitude 40M (13 ft)

7.2 DIESEL REQUIREMENTS

a. The Diesel shall have a continuous output rating the above power required for generator and all auxiliary devices such as oil pump, fans, etc., at the continuous and the 2 hour overload rating. The Diesel shall have a two hour rating of 110% BHP.

b. The Diesel along with the generator and excitation system shall be mounted on a common base (skid mounted) supplied by the manufacturer and the diesel shall drive the generator through a solid or flexible direct coupling.

c. The diesel shall operate using high speed diesel fuel oil and use a solid injection type fuel oil system controlled by the governor.

d. The engine compression ratio shall be suitable for automatic cold starting of the engine using fuel oil and without changing compression ratio.

e. The Set shall have a day tank suitable for 24 hours operation at rated load. The day tank will be supplied from Owner's 1200 liter (317 gallons) storage tank located near the engine. The day tank shall be provided with a suitable float check valve capable of closing against a 8M (26 feet) head from the Owner's storage tank or pumping system and a float switch to automatically control Owner's fuel transfer pump.

f. A suitable fuel oil filter set shall be provided with the engine and shall be located on the engine at a point that is readily accessible for servicing. The filter elements shall be of the replaceable type.

g. The lubrication system shall be a full circulating pressure system for all crankshaft bearings, camshaft bearings, timing gears, connecting rod bearings, and valve rocker arm bearings.

h. A lubricating oil full flow filter set of sufficient size shall be provided to properly filter all of the lubricating oil pumped by the lubricating oil pump. The filter set shall be located on the side of the engine at a point that is readily accessible for servicing. The filter element shall be of the replaceable type.

i. A coolant system with radiator, fan, immersion heater, thermostat control, and water pump shall be supplied with the engine. The system shall be of sufficient size to assure adequate cooling of the engine when operating at its intermittent rating at maximum generator load and with an ambient air temperature of 50°C (122°F). (The cooling air shall be pulled over the generator to the engine and discharged through the radiator.)

   A remote mounted radiator, if the (vertical) (horizontal) type, suitable for outdoor mounting shall be provided. The radiator shall be mounted 12M (39 feet) above the engine. The remote radiator package shall contain a 400 volt, 3 phase motor driven fan.

j. Design of engine and exhaust shall be such that exhaust line may be run to the roof. The Vendor shall provide exhaust pipe for this installation.

k. The engine shall be complete with all necessary accessories including the following in addition to those listed elsewhere.

1. Overspeed shutdown device

2. Crankcase breather

3. Lubricating oil pressure gauge mounted on the control panel

4. Suitable nameplate, readily visible, and listing the make, speed, rating, and serial number of the engine

5. Dry air filter

6. Suitable muffler

7. Approximately 1 meter (3 feet) of flexible exhaust tubing

8. Suitable slip-on flange for connecting the exhaust system to the engine

9. Cooling water temperature gauge mounted on the control panel

10. (Starting air pressure gauge mounted on the control panel)

l. A control panel if required.

7.3 DIESEL GOVERNOR

The engine speed shall be controlled by a governor to give speed regulation (dead band) within plus or minus 1/2 percent. The governor shall have a droop characteristic that can be adjusted between 0 and 5 percent speed for full load to no load. The governor shall have a load limiting device. The governor shall have provisions for remote control of the speed adjustment including the control. A Woodward UG-8 governor is preferred.

7.4 GENERATOR

a. The generator shall have the following specifications:

kVA:	625
PF:	0.80
Voltage:	400, 4 wire grounded
Phase:	3
RPM:	1,500
Frequency:	50

b. The generator limiting temperature rise shall be in accordance with ANSI C50.13 for Class (B) insulation in a 50°C ambient temperature.

c. The generator and exciter shall have standard NEMA open dripproof guarded frame construction and shall be mounted on a common frame with the engine. All open and exposed parts of the generator and exciter shall be painted the same color as the engine.

d. The three phase armature winding shall be provided with all coil leads brought out of the generator. These leads shall be equipped with suitable terminal lugs. The generator shall be suitable for grounded neutral operation.

e. The generator shall be provided with current transformers at the neutral ends of the phases of the generator. These CTs shall have an ANSI accuracy class of C100 suitable for relaying. CT leads shall be brought out to the engine control panel terminal block for connection to the Owner's control panel.

f. The generator shall be provided with two potential transformers.

g. The generator shall have 6-RTDs, 10 ohms at 25°C, imbedded between armature windings with connections brought out to a separate terminal box with terminal strip.

7.5 EXCITER

A stabilized exciter shall be furnished and shall have sufficient capacity to provide the maximum required excitation for the generator during normal operation and during starting of the motor load described elsewhere in this Specification. It shall be designed to have a nominal response ratio of not less than 0.5 as defined in the latest ANSI C42.100. The type of exciter (static or rotating) and rating shall be determined by the Vendor. If the static type is selected, it shall be saddle-mounted on the generator or in the control panel hereinafter specified.

7.6 VOLTAGE REGULATOR

A suitable solid state type voltage regulator shall be furnished for operation and control of the generator described above. The regulator, necessary control switches and auxiliary equipment, shall all be mounted on the control panel. The voltage regulator shall be capable of maintaining terminal voltage within plus or minus 1/2 percent of generator rated voltage from no-load to full load and be adjustable for plus or minus 7 1/2 percent of rated voltage. The characteristics of the generator voltage regulator shall be such that it shall be capable of forcing the exciter to the ceiling. The manual voltage adjusting control unit shall be mounted on the control panels and shall allow adjustments of plus or minus 7 1/2 percent at rated voltage.

The voltage regulator shall be provided with adjustable droop compensation to allow parallel operation with a power system.

7.7 ACOUSTIC REQUIREMENTS

The Diesel Generator Set when operating at no load shall have a sound level of 90 dba or less when measured at 1 meter from the set.

The acoustic data required for the diesel generator are octave band sound power levels in decibels with a reference power of one picowatt. However, sound pressure levels in decibels with a reference pressure of 0.0002 microbars will be acceptable providing the weighting network and distance to the sound source are indicted. In the Event acoustic data for this is not available, acoustic data for similar equipment will be acceptable. However, the equipment differences should be indicated and the Contractor's estimate of the acoustic effect of these differences should be indicated.

7.8 CONTROL EQUIPMENT

a. Control Panel

A control panel shall be furnished at the emergency generator for the diesel generator instruments, controls, and alarms in accordance with the applicable NEMA Standards. The control panel shall be completely piped and wired with terminal blocks for external connections. The control panel shall be floor mounted. Panel mounted devices shall include the following:

1. Voltage regulator and all necessary auxiliaries

2. Exciter field rheostat

3. Alarm devices, relays and annunciator specified under heading "Alarms"

4. Automatic starting control, push--button devices for starting, stopping and lockout out the engine. Starting control power shall be from the Owner's 125 volt dc battery. Equipment shall operate satisfactorily over a range of 90 to 140 volts.

5. Generator Voltmeter 0-600 Vac - 1 phase with switch

6. Generator Ammeter - 1 meter with switch

7. Generator Wattmeter - 3 phase

8. Generator frequency meter 45-55 hertz

9. Differential Relay - 3 single phase

10. Voltage Restrained overcurrent relays - 3 single phase

11. Synchronscope, Synchronizig Switch, Breaker Control Switch

12. Panel lights switch

13. The Contractor shall furnish suitable nameplates to identify all controls. The voltage adjusting rheostat shall be furnished with a suitable nameplate having position indication, "raise" and "lower." The operating handle shall have a pointer.

14. Painting shall be in accordance with the Contractor's standard.

15. The local engine governor and voltage control switch shall be wired to terminal blocks so that the Owner can control these functions by remote devices located on Owner's panel.

16. An engine running contact closure shall be provided.

7.9 ALARMS

a. Alarm lights shall be provided on the diesel-generator control panel. These shall include but not be limited to the following:

1. Overspeed

2. Generator low voltage

3. Low lubricating oil pressure

4. High cooling water temperature

5. Overcranking or failure to start

6. Low starting air pressure

7. Engine running

b. Alarm lights shall stay on until manually reset.

c. A contact shall close when any alarm goes on for the Owner's remote common alarm.

d. The low voltage or low lubricating oil pressure alarms shall be arranged to energize the remote alarm 10 to 15 seconds after the diesel has come up to speed.

e. The engine shall not be shut down automatically due to low oil pressure or high water temperature.

f. The current carrying capacity of the alarm contacts shall be not less than one ampere at 129 volts dc. If the Contractor's standard contacts are not adequate for this duty, interposing relays with suitable contacts may be furnished.

7.10 AUTOMATIC STARTING SYSTEM

a. Automatic starting control equipment shall be mounted in the control panel. The automatic starting equipment shall be of either the continuous cranking or intermittent cranking type as recommended by the Contractor. At least 4 cranking attempts shall be made if intermittent cranking is used. If the engine has not started at the end of the starting cycle, it shall lock out requiring manual reset, shut off the fuel supply and operate an alarm contact.

b. The automatic starting equipment shall be designed so that closing of remote undervoltage or underfrequency contacts (by the Owner) will start the engine. Provision shall be made for external starting signals from either momentary or continuously closed contacts.

c. All provisions for external controls shall be wired to terminal blocks to receive Owner's wiring.

d. The stop switch shall be arranged so that a momentary operation of the switch will cause the engine to stop.

e. Controls for manually starting and stopping the engine shall be mounted on the control panel.

f. The engine shall be equipped with a thermostatically controlled immersion water heater in the cooling water system. The water heater shall be suitable for 220 volt ac, single phase, 50 hertz. The water heater shall maintain a jacket water temperature of 20°C (68°F) in an ambient of 5°C (41°F).

g. Starting shall be by a dedicated battery with a dedicated charger supplied by the Contractor. Input power to the charger (by the Owner) shall be 400V, single phase.

(g.) Starting shall be by the use of an air motor designed for an air system which may vary between 550 and 700 kilo pascals (80 and 102 psig) by the Owner. Cranking speed shall be above the minimum recommended cranking speed at 550 kPa (180 psig). Control voltage: 125 volt dc (By Others).

h. The starting motor and engaging mechanism shall be of a type that will positively engage and shall be Bendix or approved equal.

8.0 PERFORMANCE REQUIREMENTS

a. The diesel generator set when installed and functioning shall meet or exceed the design requirements listed in Article 7.0.

b. All components shall be completely assembled, tested, and ready for operation at the time of delivery to the jobsite.

c. Upon receipt of a contact closure signal at the control panel the set shall automatically start, come up to speed and come up to voltage in 10 seconds.

d. When operating at no load, the set shall be able to accept a load of 625 kVA, 0.80 PF upon closure of the main breaker and return to rated speed in 3 seconds and 90% voltage in 2 seconds.

e. When operating loaded at 500 kVA, 0.80 PF the Set shall start an additional 45 KW induction motor (across the line starting) with the instantaneous voltage not dropping below 80 percent and the voltage returning to 90 percent within 1 second.

f. The Set shall have automatic shutdown by push-button operation at the set control board.

9.0 MATERIAL REQUIREMENTS

Except where otherwise specified herein, material of construction shall be Vendor's standard which has proven satisfactory in the past and meets applicable code requirements.

10.0 FABRICATION AND ASSEMBLY REQUIREMENTS

The Diesel Generator Set and associated equipment shall be fabricated and assembled in accordance with the following requirements:

a. The Codes and Standards stated in Article 4.0
b. The Vendor's QA/QC Program

11.0 INSTALLATION REQUIREMENTS

Not applicable

402

12.0 PERSONNEL REQUIREMENTS

a. The Vendor shall employ personnel qualified to perform the work in accordance with the Vendor's QA/QC Program.

b. Welding Procedure and Welders shall be qualified in accordance with requirements of AWS D1.1.

13.0 INSPECTIONS AND TESTS

a. After complete assembly the generator armature, generator field, exciter armature and exciter field shall be given an ac high potential test in accordance with ANSDI C50.10. Each phase of the generator and exciter armature shall be tested separately.

b. After factory assembly the unit shall be given a shop test to include:

   1. Automatic start-up, accelerating to operating speed and up to voltage in time required by performance requirements Article 8.0.

   2. Fuel consumption of diesel and temperature rise of generator at full load.

   3. No load saturation curve or data from a similar generator.

   4. Load acceptance from no load as required from Performance Requirements Article 8.0.

   5. Large motor starting as required by Performance Requirements Article 8.0.

   6. Maximum output test for 1 hour.

c. The Owner's representatives shall have free access to the equipment during the process of its manufacture. The Contractor shall notify the Owner when factory tests shall be made so that a representative may witness the tests, if desired.

d. The Owner will have the right to field test the equipment to verify the requirements of this Contract.

e. Should these field tests indicate that the equipment fails in any manner to fulfill these requirements, the Contractor shall make changes or alterations at its expense as the Contractor may deem advisable after conferring with the Owner. A second test shall be conducted in the same manner as in the first.

f. Should the second test also indicate the failure of equipment to meet the Contractor's guarantee to start, accelerate and operate the loads under the conditions specified, the Owner may reject the equipment, and the Contractor shall refund to the Owner all monies paid to the Contractor. If said equipment is rejected under the above conditions, removal of same shall be at the Contractor's expense.

g. The Owner will furnish all diesel fuel, lubricating oil, water, test equipment, load and labor required for the above specified field tests (d, e, f above).

h. The Contractor shall furnish services of a competent engineer who shall make a complete inspection of the installation and make any adjustments necessary so that the equipment will provide satisfactory operation. The equipment shall demonstrate its adequacy for starting the load by making several starting and running tests, if requested by the Owner.

i. Instrument transformers shall be tested in accordance with the requirements of ANSI C57.13.

j. Indicating lamps shall be checked by applying design voltage.

k. Indicators, meters, and recorders shall be checked by applying specified inputs and observing the scale deflection in accordance with ANSI C37.20, Paragraph 5.3.4.3.

l. Switches shall be tested in each switch position to verify conformance to the required switch development.

m. All test instruments used shall have current calibration traceable to a National Bureau of Standards primary standard or equivalent.

n. Wiring shall be visually examined for workmanship and conformance with the latest "approved" or "as built" drawings.

o. Screws and nuts securing wiring to terminals shall be checked for tightness.

p. Control wiring shall be tested for correctness, absence of short circuits, and continuity in accordance with ANSI C37.20, Section 5.3.4.1.

q. Control wiring shall be tested at a potential 1,500 volts to ground at 50 hertz for 1 minute in accordance with ANSI C37.20, Section 5.3.4.2 and NEMA ICS 1, Section 109.05. Meters, solid-state devices, and instruments shall be disconnected during this test.

r. Results of the production tests shall be accurately recorded and appropriate test reports prepared. The final reports shall be reviewed by competent technical personnel who shall certify that the equipment tested meets the requirements of this Specification.

s. Certification of design tests shall contain statements of when, where, and by whom the tests were performed and shall state the results of the tests. These certifications shall be signed by a responsible employee of the Vendor.

14.0 CLEANING, CORROSION PROTECTION, AND COATING

14.1 CLEANING

Parts shall be free from dirt, scale, and unwanted grease. The equipment shall be handled throughout production and packaging so that no foreign matter will be introduced into or onto the equipment and impair its mechanical or electrical operation.

14.2 CORROSION PROTECTION AND COATING

a. All equipment shall be thoroughly chemically cleaned and treated for rust prevention. All equpment shall receive the Vendor's standard pre-paint treatment and primer coats.

b. The Diesel-Generator Set shall be finished with paint in accordance with ANSI C37.20, Paragraphs 6.4.1 and 6.5.1, "Material and Finish," including the requirements for phosphating and corrosion-resistant painting. In addition, all steel surfaces shall have a minimum of two finish coats.

15.0 MARKING AND IDENTIFICATION

15.1 Each package, skid, box, and crate shall be marked on the outside with the following information so that it is readily visible:

a. OWNER'S name
Project Identification
Street address
City, state, and country

b. The Owner's purchase order number

c. Any special instructions for handling

d. The weight of each, the box, crate, etc.

e. The Engineer-assigned tag number(s) and bill of material number(s).

15.2 The Diesel Generator Set shall have a permanently affixed data plate made from stainless steel, permanently imprinted with at least 5mm high letters, and shall contain the following information:

a. Manufacturer's name and address

b. Equipment type

c. Serial number

d. Date of Manufacture:

e. Rated Voltage and Connection

f. Rated Output

g. Elevation and Ambient Temperature for Rating

h. Overload Rating and Time

16.0 PACKAGING, SHIPPING, AND STORAGE

16.1 Packaging and shipping shall meet ANSI N45.2.2, Section 2.7.2 (including Appendix A3) 4.1, 4.2, 4.3, and 4.4. The classification required by Section 2.7 for the items specified herein is level B. (This equipment is not intended for use in a nuclear power plant; ANSI N45.2.2 is referenced only because it is a comprehensive and accepted standard.

16.2 All equipment not bolted to the structure and made a part thereof shall be packed in separate boxes. Removable units may be packaged separately if too heavy for safe shipment when assembled within the enclosing structure.

16.3 All boxes and crates shall be plainly marked as specified in paragraph 15.1 above.

17.0 ACCEPTANCE CRITERIA

The Vendor shall comply with the following requirements before he submits the work for acceptance.

a. The Vendor shall obtain an "Approved" status from the Owner for the Vendor drawings required in paragraph.

b. The Vendor shall have successfully completed the requirements of Inspection and Test.

SUMMARY TABLE 1

DIESEL ENGINE DATA

1. Make, type and description of the governor _____

   _____

2. Engine and generator maximum load speed, rpm _____
3. Continuous and intermittent bhp rating of engine at rated speed, and site conditions and with all accessories _____
4. Number of cylinders _____, cycle _____
5. Cylinder bore _____
6. Piston stroke _____, piston speed _____
7. Type of cylinder construction _____
8. Brake mean effective pressure at rated load _____
9. Engine compression ratio _____
10. Fuel and exhaust
    a. Analysis of exhaust gases based on No. 2 fuel oil _____

       _____ _____

    b. Volume and temperature of the exhaust gases leaving the muffler

       _____
11. Quantity of cooling air at 32°C (90°F) required by the cooling system, cfm _____
12. Specific fuel consumption of engine at full load on the generator in Kg/kWhr (lb/kWhr) _____

13. Make and type of coupling between engine and generator _____

_____

14. kW rating of immersion water heater _____

15. Type of vibration dampers to be provided if required _____

_____

16. Specific oil consumption of engine at full load on the generator

_____

17. Exhaust pipe

    Diameter _____

    Schedule _____

18. Bearings: Type and number _____

SUMMARY TABLE 2

GENERATOR DATA

1. Make, type and description of generator proposed _____

   _____

2. Stator winding resistance (line to neutral) at 25°C _____
3. Rotor winding resistance at 25°C _____
4. Guaranteed temperature rise of stator and rotor at rated conditions of load and voltage _____
5. Efficiency at rated power factor
   a. 2/4 full load _____
   b. 3/4 full load _____
   c. 4/4 full load _____
6. Generator reactances
   a. Synchronous (at rated current) X_d _____
   b. Transient (at rated current) X'_d _____
   c. Subtransient (at rated current) X''_d _____
   d. Zero sequence (at rated current) X_o _____
   e. Negative sequence (at rated current) X_2 _____
7. Short circuit ratio _____
8. Full load excitation required at maximum operating temperature
   a. kW _____
   b. Amperes _____
   c. Voltage _____

9. Time constant, T'_{do} _____

10. Generator characteristics - Percentage rise in generator voltage when full load is removed with the generator operating at constant speed and excitation and rated power factor _____

11. Momentary percent drop in rated generator voltage, with voltage regulator, due to starting largest motor, _____ Kw (hp), at no-load

_____

12. The percent of generator rated voltage restored following the starting of largest motor _____

13. The time for restoring the generator voltage due to starting largest motor _____

SUMMARY TABLE 3

EXCITATION SYSTEM

1. Make, type and description of exciter proposed
   a. kW _____
   b. Voltage rating _____
   c. Current rating _____
   d. Speed _____
2. Resistance of shunt field at 25° _____
3. No-load and load saturation curve with generator field at maximum operating temperature _____
4. Guaranteed temperature rise _____
5. Type of drive _____
6. Exciter response ratio _____
7. Exciter ceiling voltage _____
8. Data on field switch
   a. Manufacturer _____
   b. Type _____
   c. Rating _____
   d. Voltage _____
   e. Current _____
9. Data on discharge resistor _____
   a. Ohms _____
   b. Amperes _____
   c. Maximum Volts _____

10. Make, type and description of generator regulator proposed

a. Regulator sensitivity _____

b. Range of voltage adjusting rheostat _____

SUMMARY TABLE 4

AUTOMATIC STARTING SYSTEM

1. Type of Cranking _____

2. Air Starting _____

   a. Airflow required m^3 (scfm) _____

   b. Volume air required per start m^3 (ft^3) _____,

      and per cranking cycle m^3 (ft^3) _____

   c. Maximum pressure KPa (psig) _____

   d. Minimum pressure KPa (psig) _____

3. Electric Starting _____

   a. Battery Manufacturer _____; type _____;

      voltage _____; capacity _____A; for _____ minutes

   b. Charger rating _____

SUMMARY TABLE 5

ACOUSTIC DATA SHEET

AC DIESEL ENGINE GENERATOR

Octave Band Geometric Mean Frequency (Hertz)	Equipment Without Acoustic Treatment or Guarantee	Equipment With Maximum Sound Level Guarantee of 90 dBA at 1 Meter (3 ft)
63	_____	_____
125	_____	_____
250	_____	_____
500	_____	_____
1000	_____	_____
2000	_____	_____
4000	_____	_____
8000	_____	_____

Kind of levels given, indicate which of the following:

Sound Power Levels
re 10 (Exp - 12) watt

Sound Pressure Levels
re 2x10 (Exp - 4) microbars

If sound pressure levels are given, indicate both of the following:

Weighting network used
A. B. C. or Linear (None)

Distance to sound source,
Feet or Meters

Bidder Comment: _____

_____

SUMMARY TABLE 6

ACOUSTIC DATA SHEET

SOUND LEVELS FOR

MECHANICAL EQUIPMENT

ITEM: AC Diesel Generator - Reference Section 5, Paragraph 5.10.1

Octave Band Geometric Mean Frequency (Hz)	Sound Power Level (dB Ref. One Picowatt)	Maximum Sound Pressure Level One Meter From A Major Surface (dB Ref. 20 Micropascals)
22		
125		
250		
1000		
2000		
4000		
8000		
Overall Level:		

Bidder statement regarding acoustical treatments, if any, that are standard for the equipment being furnished, equipment operating conditions and acoustic test code corresponding to the above data:

_____

_____

_____

LAKHRA POWER FEASIBILITY STUDY

SPECIFICATION E-6

AUXILIARY POWER TRANSFORMER

LPS/2B2976/D6

417

LAKHRA POWER FEASIBILITY STUDY
SPECIFICATION E-6
AUXILIARY POWER TRANSFORMER

SECTION CONTENTS

ARTICLE	TITLE	PAGE
1.0	DESCRIPTION OF WORK	1
2.0	WORK INCLUDED	1
3.0	WORK NOT INCLUDED	2
4.0	APPLICABLE CODES AND STANDARDS	2
5.0	SUPPLEMENTAL DATA	4
6.0	VENDOR DATA	4
7.0	DESIGN REQUIREMENTS	6
8.0	PERFORMANCE REQUIREMENTS	16
9.0	MATERIAL REQUIREMENTS	16
10.0	FABRICATION AND ASSEMBLY REQUIREMENTS	16
11.0	INSTALLATION REQUIREMENTS	17
12.0	PERSONNEL REQUIREMENTS	17
13.0	INSPECTIONS AND TESTS	17
14.0	CLEANING, CORROSION PROTECTION, AND COATING	20
15.0	MARKING AND IDENTIFICATION	21
16.0	PACKAGING, SHIPPING, AND STORAGE	21
17.0	ACCEPTANCE CRITERIA	22

ATTACHMENT - EQUIPMENT DATA

413

LAKHRA POWER FEASIBILITY STUDY
SPECIFICATION E-6
AUXILIARY POWER TRANSFORMER

1.0 DESCRIPTION OF WORK

The Work to be performed consists of designing, fabricating, testing, and delivering to the jobsite two auxiliary power transformers. The transformers will be used for utility service at two 350 MW power plants for the Water and Power Development Authority (WAPDA) to be located in Pakistan.

2.0 WORK INCLUDED

The Work performed shall include at least the following:

a. The Vendor shall furnish two, three phase transformers for each unit, complete with all features and accessories as specified herein for completely operable auxiliary power transformers.

b. The transformers will provide the normal auxiliary power requirements for a 350 MW turbine generator installation. The transformers will be energized from the generator isolated phase bus. The generator is furnished with high resistance grounding using a distribution transformer and secondary resistor.

c. The Vendor shall furnish, upon request, the services of a qualified field representative during the erection period who shall perform the following:

   1. Technical direction for:

      (1) Unloading and transferring the transformer and associated equipment from railroad cars to foundations.

      (2) Erection, assembly, and testing of all equipment.

      (3) Drying and filling the transformer with oil.

   2. Inspection of the assembly, clearance, alignment, and cleanliness of all major parts to the extent that this can be accomplished without disassembling the equipment.

3. Instruction of the Owner's operating personnel in the performance of component and operating tests that the Vendor may specify, including initial start-up and placement of the equipment in good operating condition, and recommendation of procedures for operating and maintaining the equipment.

3.0 WORK NOT INCLUDED

The following items are not included in the requirements of this section but will be accomplished by others:

a. Foundations, foundation bolts, shims, and fire protection.

b. Labor and equipment for unloading and field installation.

c. Flexible connections for termination of isolated phase bus conductors at the high-voltage bushings.

d. Available utilities:

1. Cooler power and control: 400-volt, 3-phase, 4-wire, 50-hertz ac.

2. Convenience outlets, control cabinet lights and heaters: 220-volt, single-phase, 50-hertz ac.

4.0 APPLICABLE CODES AND STANDARDS

The following codes and standards are applicable to the Work, to the extent specified herein:

a. American National Standards Institute (ANSI):

1. C37.20, "Switchgear Assemblies, Including Metal-Enclosed Bus."

2. C57.12.00, "General Requirements for Liquid-Immersed Distribution, Power and Regulating Transformers."

3. C57.12.10, "Requirements for Transformers 230,000 Volts and Below, 833/958 through 8333/10417 KVA Single Phase, and 750/862 through 60,000/80,000/100,000 KVA Three Phase."

4. C57.12.70, "Terminal Markings and Connections for Distribution and Power Transformers."

420

5. C57.12.90, "Test Code for Distribution, Power, and Regulating Transformers" (IEEE 262).

6. C57.13, "Requirements for Instrument Transformers."

7. C57.92, "Guide for Loading Oil-Immersed Distribution and Power Transformers."

8. C57.98, "Guide for Transformer Impulse Tests" (IEEE 93).

9. C59.131, "Guide for Acceptance and Maintenance of Insulating Oil in Equipment" (IEEE 64).

10. C62.1, "Surge Arresters for Alternating-Current Power Circuits" (IEEE 28).

11. C68.1, "Techniques for Dielectric Tests" (IEEE 4).

12. C68.2, "Techniques for Switching Impulse Testing" (IEEE 332).

13. C76.1, "General Requirements and Test Procedure for Outdoor Apparatus Bushings" (IEEE 21).

14. C76.2, "Electrical, Dimensional, and Related Requirements for Outdoor Apparatus Bushings" (IEEE 24).

15. N45.2.2, "Packaging, Shipping, Receiving, Storage and Handling of Items for Nuclear Power Plants."

16. Y14.15, "Standard Drafting Practices for Electrical and Electronics Diagrams," including Supplements Y14.15a and Y14.15b.

b. National Electrical Manufacturers Association (NEMA):

1. 107 (R 1971), "Method of Measuring Radio Noise (EEI Publication G9).

2. ICS 1, "General Standards for Industrial Control and Systems."

3. ICS 4, "Terminal Blocks for Industrial Control Equipment and Systems."

4. ICS 6, "Enclosures for Controls and Systems."

c. National Fire Protection Association (NFPA) 70, "National Electrical Code."

d. Institute of Electrical and Electronics Engineers (IEEE) 262B, "Trial Use Dielectric Standard for Power Transformers for Operation on Effectively Grounded Systems, 345 kV and Above."

5.0 SUPPLEMENTAL DATA

The following supplemental data are applicable to the Work, to the extent specified herein:

a. The documents listed on the contents page as attachments.

b. Transformer losses:

1. Transformer no-load and load losses will be evaluated using the factors listed below at the 65° C OA rating:

(1) No-load (iron) - $Later/kW.

(2) Load losses - $Later/kW.

2. If either the no-load or load losses fail to meet guarantees, the OWNER shall, at his option and as an alternate to rejection, require a reduction in the price of a transformer equal to the excess losses multiplied by the loss evaluation factors specified herein.

6.0 VENDOR DATA

6.1 The Vendor shall furnish data in accordance with the requirements indicated on the attached Equipment Data Requirements.

6.2 The Vendor data furnished in accordance with paragraph 6.1 shall be as follows:

a. Dimensional front, side, and top views of the assembled transformer, including the following information:

1. Bill of material which shall give the description, quantity, rating, manufacturer, and catalog or part number for each accessory item.

2. Necessary dimensional information for coordination with the OWNER'S medium voltage connections and generator isolated phase bus duct.

472

3. Location of the control cabinet, ground pads, lifting lugs, jacking points, and all accessories.

4. Dimensional tolerances for mating with foundation and bus ducts.

5. Transformer weight empty and full, core and coil weight, and volume of oil.

b. Clearance drawing of transformer shown in shipping position on the transporter.

c. Detail drawings of bushings, low-voltage bushing flanges, baseplate, and high-voltage terminal pads.

d. Schematic wiring diagrams for cooler control.

e. Wiring connection diagrams covering all electrical devices. The connection diagrams shall be in accordance with ANSI Y14.15 and the following:

1. Switch developments shall be shown.

2. Internal connections of all devices and relays shall be given.

3. Control panel devices and terminal blocks shall be shown in their approximate physical positions.

4. Drawings from a typical previous job are not acceptable. Drawings made for this specific job are required.

f. A nameplate legend list.

g. Recommended spare parts list.

h. Handling, shipping, and storage instructions.

6.3 Detailed operating and maintenance manuals shall be furnished covering the following equipment and information:

a. Loading onto and unloading off transporter.

b. Lifting, moving, handling, setting on foundation, and protection from weather at site, prior to energization.

c. Installation of bushings and cooling equipment, including radiators, valves, fans, and winding temperature monitoring equipment.

d. Requirements for insulating oil, including acceptable types, tests, filtering, and reconditioning.

e. Vacuum filling, gasket installation, and operation of oil preservation system.

f. Mounting, connection, testing, calibration, and adjustment of accessory devices, such as liquid level indicator, pressure relief device, vacuum gage, and sudden pressure relay.

g. Primary and secondary connections, phasing checks, and initial energization.

h. Recommended and required tests.

i. Changing tap settings.

j. Removal of bushing current transformers.

k. Complete parts list.

7.0 DESIGN REQUIREMENTS

The transformers shall be designed to operate under the following requirements and have the following features:

7.1 GENERAL DESIGN REQUIREMENTS:

The transformers shall be two winding, outdoor type, 3-phase oil immersed, forced air cooled OA/FA, 45/55°C, 50 Hertz.

a.

1. Rated output for each unit's transformers:

Winding	Self-Cooled	Maximum Forced Cooling
(1) HV	24 MVA, 45°C	-
(2) LV	24 MVA, 45°C	-
(1) HV	32 MVA, 55°C	35.84 MVA, 55°C
(2) LV	32 MVA, 55°C	35.84 MVA, 55°C

2. Temperature rise:

Average 45/55°C (by resistance method) above an ambient that does not exceed 50°C (122°F) peak and 40°C (104°F) average for 24 hours.

3. Insulation level:

   a. High- voltage winding 25 kV nominal system voltage -150 kV BIL, 50 kV low frequency test to ground.

   b. LV winding, 8.7 kV nominal system voltage: 95 kV BIL.

4. Impedance on HV winding 21 MVA base:

   a. H-X, 8.1%

   b. Impedance tolerances shall be in accordance with ANSI C57.12.00.

   c. Zero sequence impedance shall be less than 100%.

5. Fault conditions:

   a. The transformer, including bushings, shall have thermal and mechanical ability to withstand external short circuits at least equal to those described in ANSI C57.12.00.

   b. The transformer shall be adequate thermally and mechanically for faults on the low-voltage terminals for a condition which causes clearing of the generator step-up transformer high-voltage circuit breaker and generator exciter tripping at 2 cycles and alternately at 60 cycles for the prior condition of:

      1. Generator voltage: 105% of rated kV.

      2. Generator loading: (Later) at .85 PF (rated).

      3. Generator impedances:

         X_d'' = _____ PU on _____ MVA base

         X_d' = _____ PU

         X_d = _____ PU

         T_{do} = _____ seconds

         T_{sc} = _____ seconds

X_2 = _____ PU

R = _____ PU

6. Motor-starting condition:

   The transformer shall be adequate thermally and mechanically for the current due to frequent full voltage starting of large squirrel cage induction motors. Maximum motor size shall be as follows:

   6.9 kV system - 4,100 kW

7. Automatic bus transfer:

   The transformer shall be adequate thermally and mechanically for the current inrush which occurs when its LV windings are closed onto a bus whose voltage is equal, but 85° out of phase, to the transformer voltage, provided the current decreases to full load in 5 seconds.

8. Overvoltage condition:

   a. The transformer shall be capable of withstanding overvoltage conditions specified in ANSI C57.12.00, Paragraph 2.4.

   b. Unit auxiliary transformers shall be capable of withstanding a voltage equal to 125% of the selected transformer tap for a period of 10 seconds.

b. Tap changers:

   Deenergized tap changer with two 2-1/2% full capacity (FC) taps above and two 2-1/2% FC taps below nominal rating, on HV winding.

c. Winding connections:

   1. HV - Delta

   2. LV - Wye with neutral brought out for connection to a grounding resistor.

d. Phase displacement:

   Low voltage shall lead high voltage by 30 degrees.

-426

e. Insulating oil:

Oil shall be supplied by the VENDOR and shall meet the dielectric strength requirements specified in ANSI C57.12.00.

f. Noise level:

1. The sound pressure level of the transformer noise shall not exceed 90 dBA when measured at a distance of 1.5 meters (5 feet) horizontally from the major surfaces of the transformer and at a height of 1.5 meters above the mounting plant, using the A-scale of a standard sound level meter at slow response.

2. Noise levels specified in paragraph 7.1, 8., a. shall be achieved with the transformer loaded and all fans operating.

7.2 MECHANICAL DESIGN FEATURES:

a. Transformer tank:

1. The transformer tank shall be of all welded construction, designed to withstand full vacuum, and suitable for vacuum filling in field without the use of temporary bracing. When the tank cover is welded to the tank, a gasket or shield shall be permanently located to prevent the entrance of weld spatter into the tank. The top cover shall include manholes with gasketed covers for access to the interior. Gaskets shall be reusable with means provided to prevent overcompression. Oil shall be sealed from the atmosphere by using a pneumatic pressure system, a nitrogen pressure system, or a sealed tank, constant oil pressure system. All accessories necessary for making the oil preservation complete and operative shall be furnished as part of the transformer.

2. The transformer base shall be designed to permit skidding the transformer in two directions, parallel to either centerline. It shall be possible to move the transformer on or off its foundation without removing oil, bushings, or tank-mounted coolers.

3. Jacking steps or brackets located 350mm (14 ft) above the base, projecting at least 250mm (10 ft) beyond the base, and clear of the base shall be provided. Provisions shall also be included for lifting the core and coils and the cover.

421

4. Two grounding pads with NEMA standard tapped holes shall be located at the base of the tank on diagonally opposite corners. For three-phase units, a copper ground bus shall be furnished and connected from the high-voltage neutral bushing to one ground terminal pad at the base of the transformer. The VENDOR shall furnish the ground bus complete with insulators, mounting pads, connectors, and all necessary hardware.

5. Valved connections 50mm (2 inches) for filter press accommodation shall be supplied at the top and bottom of the transformer tank. The lower connection shall be suitable for draining the tank and shall be provided with a liquid sampling valve.

6. The transformer shall be stable (freestanding) with all oil removed and with bushings, and radiators in place.

7. Facilities for vacuum filling shall be provided, including a 75mm (3 inches) standard pipe plug and weatherproof cap on top of the transformer for vacuum pump connection.

8. The complete transformer, including all oil tanks filled with oil, shall withstand 75kPa (11 psig) at the top for 6 hours.

b. Cooling and control equipment:

1. Transformers and all accessories shall be suitable for continuous operation at rated MVA with ambient temperatures of 50°C (122°F) maximum and an average ambient temperature of 40°C (104°F) for any 24-hour period.

2. The transformer shall be equipped with air-cooled heat exchangers mounted on the tank. Isolating valves shall be provided for all detachable radiators, coolers, so that replacement can be achieved with a minimum of time and effort and without removing the transformer oil. The fan motors shall be individually accessible to allow replacement without deenergizing the entire cooler or removing large sections of sheet metal.

3. Coolers shall be removable and there shall be valves at the top and bottom connections of the cooler piping

system between the flange connections and tank. There shall be a drain plug at the bottom of each cooler. Cooler mountings shall be such that transformer vibration will not cause excessive wear in the equipment bearings.

4. With the coolers under automatic control, provision shall be made for starting the coolers automatically from the winding temperature relay.

5. Provisions shall be made for the selection of either manual or automatic control of the coolers. When manual control is selected, each cooler group shall be independently operable.

7.3 ELECTRICAL DESIGN FEATURES:

a. Low-voltage bushings:

Each three-phase low-voltage winding shall be provided with a separate three-phase set of line bushings. The bushings shall be rated 8.7 kV, 95 kV BIL. Terminals shall be provided to coordinate with the low-voltage metal-enclosed cable bus duct (e.g., number, size, cables per phase). Details will be supplied to the VENDOR at a later date. An additional bushing shall be provided on the tank cover for each low-voltage neutral.

b. High-voltage bushings:

The high-voltage bushing shall be rated 25 kV, 150 kV BIL and shall be suitable for use with isolated phase bus. Bushings shall be top mounted through the tank cover. Terminations will be provided with the isolated phase bus equipment.

7.4 ACCESSORIES:

a. Tap

1. A manual, deenergized tap changer shall be provided. The changer shall be equipped with a handle operable by an operator standing at grade level, with provisions for locking in any position. The handle shall provide visual indication of tap position. A permanently affixed stainless steel red warning plate shall be located near the tap changer handle and shall read "DO NOT OPERATE TAP CHANGER WHILE TRANSFORMER IS ENERGIZED."

2. The deenergized tap changer mechanism shall be located so that it can be inspected, repaired, or replaced without untanking the transformer.

b. Protective devices:

The accessory equipment listed below shall be provided on each transformer tank for the protection and control of the transformers and associated equipment. Gages shall be mounted at eye level, and indicators shall be readable by an operator standing at grade level. The following shall be provided:

1. Magnetic liquid level gage with alarm contact.

2. Dial type thermometer to indicate top oil temperature, complete with a manual reset, maximum reading pointer, and alarm contact.

3. Self-resetting pressure relief device with alarm contact and mechanical target.

4. Vacuum/pressure gage to indicate the gas pressure inside the tank.

5. Winding temperature indicators with indicating dial, maximum reading pointer, and external reset. The indicator relays shall have four electrically separate and adjustable contacts to operate in sequence on rising temperature and to be used as follows:

   a. One contact set to start cooling fans, to increase the transformer rating to 31.36 MVA (55°C).

   b. One normally open contact set to initiate alarm on transformer winding temperature in excess of 120°C.

6. Sudden pressure relay (rate-of-rise) as manufactured by General Electric Company or Westinghouse Electric Corporation or as approved equal, equipped with alarm and control contacts arranged for remote electrical reset.

7. Undervoltage relay with an alarm contact to on failure of the cooling system ac power supply.

8. Three temperature detector coils, each rated 10 ohms at 25°C, for the OWNER'S remote measurement of:

   a. Top oil temperature.

   b. Secondary winding LV temperature.

9. The alarm contacts referenced herein shall be provided for use with the OWNER'S remote annunciator. They shall be electrically isolated, normally open and rated 125 volts, 0.2 ampere dc inductive.

c. Bushing current transformers:

1. Each bushing shall be equipped with bushing-type current transformers arranged in the following order from the transformer end:

   (1) HV: Two multi-ratio C400 accuracy class.

   (2) LV: multi-ratio C800 accuracy class.

2. The low-voltage neutral bushing shall be equipped with a bushing-type current transformer.

3. Current transformers shall conform to the requirements of ANSI C57.13.

4. Provisions shall be made to allow field removal of bushing current transformers.

d. Low-voltage neutral grounding:

A grid-type neutral grounding resistor, rated 6,900 volts, (Later) ohms, 2,000 amperes for 1 minute, shall be provided for each low-voltage neutral. Grounding resistors shall be completely assembled and enclosed for outdoor service. The resistor assembly shall be supported from the transformer. Insulated connections shall be furnished from the neutral of the low-voltage winding to the resistor. Connections shall be provided from the resistor to a grounding pad near the base of the transformer.

e. Nameplates:

Nameplates shall be provided for all control panel devices in accordance with the following:

1. Nameplates shall be laminated and shall have vertical black capital letters on a white background.

2. Nameplates shall be securely attached with machine screws. Self-tapping screws are not acceptable.

3. Each device shall be identified by a nameplate. Nameplates shall be located above switches and pushbuttons and below meters and relays.

4. Fuses, auxiliary relays, terminal blocks, and other devices mounted inside the panels shall be identified either by nameplates or by printed or stenciled inscriptions.

7.5 MOTORS

Fan motors shall have a nameplate voltage rating of 380 volts and shall be sized to operate within their nameplate ratings. Fan motors shall be provided with thermoguards in all three phases.

7.6 POWER SUPPLIES

a. No more than three fans shall be serviced from one circuit breaker mounted in the control panel. Fan circuit breakers shall have thermal magnetic, ambient-compensated trip elements on each phase.

b. Control voltage shall be 220 volts, 50 hertz, obtained by transformation from the 3-phase, 400-volt source. Control transformers and changeover equipment shall be furnished with this equipment.

7.7 CONTROL PANEL AND WIRING:

a. Control Panel:

1. The control panel shall be weatherproof and mounted within easy reach of a person standing at grade level. It shall contain all the equipment necessary for controlling the fans for the transformer. Control, alarm, and current transformer secondary wiring shall be brought out to terminal blocks in a split-type junction box for termination of the OWNER'S field wiring. The box shall be mounted below and adjacent to the control cabinet. The bottom half shall be removable for field drilling to match the OWNER'S conduits and will remain in place during transformer removal.

2. The 400-volt equipment and terminal blocks shall be grouped separately from the 220-volt equipment. The 400-volt terminal blocks shall be equipped with insulating covers labeled "400 VOLT."

3. Space heaters:

   a. Space heaters shall be provided in the panels to prevent condensation of moisture while the equipment is out of service. The space heaters shall be operated on a 220-volt, single-phase ac supply. The space heaters shall be provided with a substantial perforated or expanded metal guard for personnel protection.

   b. The heaters shall be mounted so that the heater terminals and connecting wiring are below the heater to prevent damage from rising heat. Adequate distance shall be maintained between heaters and adjacent wiring to avoid heat damage.

4. Internal illumination suitable for operation on 220-volt ac shall be provided.

5. A single-pole fuse shall be provided for protection of the space heater and internal lighting circuits.

6. A 25mm (1 inch) copper ground pad shall be provided on the panel fastened to the frame in such a way as to make good electrical contact. Provisions shall be made for connection of the OWNER'S 4/0 AWG cable. Two drilled holes shall be provided.

7. A solid state annunciator shall be provided with integral lamp and logic providing ISA-1 type sequence to alarm each alarm condition specified herein. The annunciator shall include:

   a. Acknowledge, test, and reset functions.

   b. A remote transmit relay, independent of the local visual indication, for indication in the main control room of any local alarm condition, including loss of control power at the local panel.

   c. An audible device to sound locally.

The annunciator shall operate from a 220-volt 50-hertz ac supply.

8. A convenience duplex outlet shall be provided with protective fuses and wired to terminal blocks suitable for connection to the OWNER'S 220-volt ac, single-phase supply. The convenience outlets shall be installed, wired, and grounded in accordance with NFPA 70.

b. Wiring:

1. Wiring between the control panel and devices mounted on the transformer shall be enclosed in rigid galvanized steel conduit attached to the transformer tank. Steel wire armored cable or liquidtight, flexible steel conduit shall be used where flexibility is required, such as for wiring at motors. Conduits shall be of adequate size to allow wiring removal and replacement.

2. The Engineer will provide details of any special control and interlocking functions required.

3. Current transformer secondary wiring shall be terminated on separate shorting-type terminal blocks with sealable covers.

8.0 PERFORMANCE REQUIREMENTS

The transformers, when installed and functioning, shall meet or exceed the design requirements listed in article 7.0.

9.0 MATERIAL REQUIREMENTS

Except where otherwise specified herein, materials of construction shall be the VENDOR'S standard which has proven satisfactory in the past and meets applicable code requirements.

10.0 FABRICATION AND ASSEMBLY REQUIREMENTS

The transformers shall be fabricated and assembled in accordance with the following requirements:

1. The codes and standards stated in article 4.0.

2. The Vendor's QA/QC program.

434

11.0 INSTALLATION REQUIREMENTS

None

12.0 PERSONNEL REQUIREMENTS

The Vendor shall employ personnel qualified to perform the Work in accordance with the Vendor's QA/QC program.

13.0 INSPECTIONS AND TESTS

The following inspections and tests shall be performed:

13.1 ROUTINE TESTS AND MEASUREMENTS:

The following routine tests and measurements shall be made on the transformer in accordance with ANSI C57.12.90:

a. Resistance measurements of all windings on the rated voltage connection of each transformer and at the tap extremes of the first transformer.

b. Ratio tests on the rated voltage connection and on all tap connections.

c. Polarity test on the rated voltage connection.

d. Phase relation test on the rated voltae connection.

e. No-load losses at rated voltage and frequency on the rated voltage connection.

f. Exciting current at 100% and 110% of rated voltage and with rated frequency on the rated voltage connection.

g. Impedance and load loss at rated current on the rated voltage connection of each transformer and on the tap extremes of the first transformer.

h. Temperature rise tests at the 55°C rating in accordance with ANSI C57.12.00. Combustible gas shall be monitored and analyzed during the test. This test shall be performed on the first transformer only prior to impulse tests.

i. Applied potential tests.

j. Induced potential tests (low frequency) in accordance with the BIL purchased.

13.2 OTHER TESTS

a. The Vendor shall perform impulse tests on the transformer in accordance with ANSI C57.12.90, C57.98, (and IEEE 262B). The tests shall include applications of full waves and chopped waves on all line and neutral terminals, and shall be made with bushings installed. In case of failure, the transformer shall be repaired and the same tests reapplied with no additional cost to the OWNER.

b. Switching surge tests shall be performed on the transformer in accordance with ANSI C57.12.90.

c. The tansformer shall be excited to 110% of rating before and after the impulse tests are made, and the change in exciting current and core loss noted.

d. The transformer shall be corona tested at the full-induced potential test voltage. The equipment and general method used shall be in accordance with NEMA 107, except that capacitance tas on high-voltage bushings may be used in place of separate coupling capacitor and sphere gaps. The radio influence voltage (RIV) shall not exceed 500 microvolts.

e. The transformer shall be corona tested at 150% of operating voltage for 1 hour. The RIV level shall not exceed 150 microvolts.

f. The bushings of this transformer shall receive the following production tests:

   1. Power factor and capacitance measurement.

   2. One minute, dry withstand test at 60 hertz.

g. Power factor tests shall be made to give a basis for future field tests. The power factor of the completely assembled transformer shall not exceed 1% on the high-voltage and 2% on the low-voltage bushings at 20°C and 50 hertz.

h. Top oil pressure test 75 kilo pascals gauge (11 psig) for 6 hours.

13.3 FUNCTIONAL TESTING

Prior to shipment, the control panel shall receive a thorough shop electrical functional test as follows:

a. Indicating lamps shall be checked by applying design voltage.

b. Indicators, meters, and recorders shall be checked by applying specified inputs and observing the scale deflection in accordance with ANSI C37.20, Section 5.3.4.3.

c. Switches shall be tested in each switch position to verify conformance to the required switch development.

d. Individual annunciator points shall be checked for correct operation of audible alarm, acknowledge, test, and reset functions.

13.4 GENERAL REQUIREMENTS

a. Testing, inspection, and acceptance criteria shall conform to applicable codes and standards specified in article 4.0.

b. All test instruments used shall have current calibration traceable to a National Bureau of Standards primary standard or equivalent.

c. Wiring shall be visually examined for workmanship and conformance with the latest "approved" or "as built" drawings.

d. Screws and nuts securing wiring to terminals shall be checked for tightness.

e. Control wiring shall be tested for correctness, absence of short circuits, and continuity in accordance with ANSI C37.20, Section 5.3.4.1.

f. Control wiring shall be tested at a potential 1500 volts to ground at 60 hertz for 1 minute in accordance with ANSI C37.20, Section 5.3.4.2 and NEMA ICS 1, Section 109.05. Meters, solid-state devices, and instruments shall be disconnected during this test.

13.5 TEST REPORTS AND CERTIFICATION

a. Results of the production tests shall be accurately recorded and appropriate test reports prepared. The final reports shall include photographic or Xerox copies of all original data sheets as recorded (i.e., original handwritten record in lieu of transcribed copy). The final reports shall be reviewed by competent technical personnel who shall certify that the equipment tested meets the requirements of this Specification.

b. Certification of design tests shall contain statements of when, where, and by whom the tests were performed and shall state the results of the tests. These certifications shall be signed by a responsible employee of the Vendor.

c. A copy of the oil test sheet from the oil supplier's refinery shall be furnished.

d. A test report on bushings shall be furnished.

14.0 CLEANING, CORROSION PROTECTION, AND COATING

14.1 CLEANING

Parts shall be free from dirt, scale, and unwanted grease. The equipment shall behandled throughout production and packaging so that no foreign matter will be introduced into or onto the equpment and impair its mechanical or electrical operation.

14.2 CORROSION PROTECTION AND COATING

a. All equipment shall be thoroughly chemically cleaned and treated for rust prevention. All equipment shall receive the Vendor's standard pre-paint treatment and primer coats.

b. The transformers shall be painted in accordance with the Vendor's standard finish paint treatment. In addition, all steel surfaces shall have a minimum of two finish coats.

c. Machined surfaces, including shafts, bearings, and couplings, shall be adequately protected against corrosion and damage during shipment and outdoor storage for 1 year. Openings shall be suitably capped with metal covers where possible.

138

15.0 MARKING AND IDENTIFICATION

15.1 Each package, skid, box, and crate shall be marked on the outside with the following information so that it is readily visible:

a. OWNER'S name
Project Identification
Street address
City, state, and country

b. The OWNER'S purchase order number.

c. Any special instructions for handling.

d. The weight of the box, crate, etc.

e. The Engineer-assigned tag number(s) and bill of material number(s).

15.2 Each transformer shall have a permanently affixed data plate made from stainless steel, permanently imprinted with at least 5mm (3/16) high letters. The data plate shall contain the information required by ANSI C57.12.00 and data such as liquid level and temperature data, terminal connections for windings and reference to accessories wiring connection diagrams, operating pressures of oil preservation system, and vacuum filing. Impedance values shown on the data plate shall be in accordance with the test report. The transformer connection diagram shall correspond to the view from the same side of the transformer that bears the data plate.

15.3 The data plate shall be located where it is readily visible and shall be securely attached with stainless steel, Phillips-head, self-tapping screws.

16.0 PACKAGING, SHIPPING, AND STORAGE

16.1 Packaging and shipping shall meet ANSI N45.2.2, Sections 2.7,3 (including Appendix A3), 4.1, 4.2, 4.3, and 4.4. The classification required by Section 2.7 for the items specified herein is level B. (This equipment is not intended for use in a nuclear power plant; ANSI N45.2.2 is referenced only because it is a comprehensive and accepted standard.)

16.2 The Vendor shall furnish a schedule of shipping packages, including weights, dimensions, and an accurate, complete description of contents.

16.3 The transformer core and coil assembly shall be shipped in an upright position in its own tank. The cooling unit, bushings, and minor accessories shall be removed for shipment. The transformer shall be shipped without oil and filled with nitrogen or dry air to a pressure slightly above atmospheric pressure. A three-element impact recorders shall be installed on each transformer tank. The average reading during shipment shall not exceed 50% of full recorder scale. Upon completion of transit, the charts of the recorder shall be made available for review by the Owner or his representative. The Owner reserves the right to be supplied with copies of those portions of charts which indicate switching speeds greater than 6KM per hour and/or equivalent vertical shocks.

16.4 The required amount of insulating oil shall be shipped by tank truck directly to the jobsite.

17.0 ACCEPTANCE CRITERIA

The Vendor shall make sure that he has complied with the following requirements before he submits the Work for acceptance:

a. The Vendor shall obtain an "Approved" status from the Owner for the Vendor drawings required in paragraph 6.2.

b. The Vendor shall be able to distribute operating and maintenance manuals in accordance with paragraph 6.3 prior to equipment delivery.

c. The Vendor shall have assembled and identified the special tools required.

d. The Vendor shall supply test reports required.

EQUIPMENT DATA

(CLIENT) _____

(PROJECT) _____

AUXILIARY POWER TRANSFORMERS

The bidder shall return one copy of this form with the bid, with all blanks filled in and related information attached

_____
(BIDDER'S NAME)

_____
(MANUFACTURER'S NAME)

_____
(QUOTATION NUMBER)

1. Complete description of transformer and accessories. _____ attach _____

2. Estimated net weights of:

   a. Core and coils Kg (lb) _____

   b. Case and fittings Kg (lb) _____

   c. Insulating liquid Kg (lb) _____

   d. Total weight of transformer Kg (lb) _____

3. Shipping weight of largest piece Kg (lb) _____

4. Approximate dimensions (including shipping dimensions) with and without coolers. _____ attach _____

5. Exciting current and no-load losses at 100%, 105%, and 110% of rated voltage. _____ attach _____

6. Estimated total capacitance to ground, measured at the low-voltage winding. F _____

7. Guaranteed losses in watts at rated voltage as follows:

   a. No load W _____

EQUIPMENT DATA

(CLIENT)

(PROJECT)

AUXILIARY POWER TRANSFORMERS

			(BIDDER'S NAME)
	b. Full load at 55°C	W	
	c. Auxiliary power	W	
8.	Percent positive and zero sequence impedances with tolerances.		
9.	Estimated efficiencies at 100%, 75%, and 50% of base rating.	100% 75% 50%	
10.	Failure rate data for transformers of the proposed design, covering both inservice and factory test failures. The list should include transformer type, MVA, voltage, cause of failure, and time required to repair.		attach
11.	Calculated continuous loads that can be maintained without exceeding normal temperature rise for one two, etc., up to full complement of coolers in operation.		attach
12.	Total kVA required for each cooler.	KVA	
13.	Number of coolers and the number and rating of fans per cooler.		attach
14.	Description of standard painting procedure.		attach
15.	Description of method of shipment, with permanent cover or temporary cover, and extent of field assembly required in addition to the installation of bushings and coolers.		attach

EQUIPMENT DATA

(CLIENT)

(PROJECT)

AUXILIARY POWER TRANSFORMERS

		(BIDDER'S NAME)
16. Complete description of type of oil preservation system and combustible gas monitoring.		attach
17. Complete description of type of oil preservation system and combustible gas monitoring.		attach
18. Description of transformer overload capability.		attach
19. Recommended distance between transformer and fire wall.	M (ft)	
20. Expected noise level of transformer specified, special without noise reduction provisions.	dBA	
21. Description of special noise reduction provisions needed to bring transformer in compliance with paragraph 7.1.f.		attach
22. Calculated X/R ratio.		
23. Type of impact recorder the VENDOR plans to install in accordance with paragraph 16.3.		
24. A list of operating installations of transformers similar to those specified herein (experience list).		attach
25. Time required for delivery of completed Work, starting from date of drawing approval by Engineer.	wks	

EQUIPMENT DATA

(CLIENT)

(PROJECT)

AUXILIARY POWER TRANSFORMERS

The bidder shall return one copy of this form with the bid, with all blanks filled in and related information attached.

(BIDDER'S NAME)

(MANUFACTURER'S NAME)

(QUOTATION NUMBER)

LAKHRA POWER FEASIBILITY STUDY

SPECIFICATION E-7

STEP-UP TRANSFORMER

LPS/2B3714/D8

LAKHRA POWER FEASIBILITY STUDY
SPECIFICATION E-7
STEP-UP TRANSFORMER

SECTION CONTENTS

ARTICLE	TITLE	PAGE
1.0	DESCRIPTION OF WORK	1
2.0	WORK INCLUDED	1
3.0	WORK NOT INCLUDED	2
4.0	APPLICABLE CODES AND STANDARDS	2
5.0	SUPPLEMENTAL DATA	4
6.0	VENDOR DATA	4
7.0	DESIGN REQUIREMENTS	6
8.0	PERFORMANCE REQUIREMENTS	18
9.0	MATERIAL REQUIREMENTS	18
10.0	FABRICATION AND ASSEMBLY REQUIREMENTS	18
11.0	INSTALLATION REQUIREMENTS (NONE)	18
12.0	PERSONNEL REQUIREMENTS	18
13.0	INSPECTIONS AND TESTS	18
14.0	CLEANING, CORROSION PROTECTION, AND COATING	22
15.0	MARKING AND IDENTIFICATION	22
16.0	PACKAGING, SHIPPING, AND STORAGE	23
17.0	ACCEPTANCE CRITERIA	24

ATTACHMENT - EQUIPMENT DATA

LAKHRA POWER FEASIBILITY STUDY
SPECIFICATION E-7
STEP-UP TRANSFORMER

1.0 DESCRIPTION OF WORK

The Work to be performed consists of designing, fabricating, testing, and delivering to the jobsite four single phase generator step-up transformers for each unit. The transformers will be used for utility service at two 350 MW power plants for the Water and Power Development Authority (WAPDA) to be located in Pakistan.

2.0 WORK INCLUDED

The Work performed shall include at least the following:

a. The Vendor shall furnish three single phase transformers with a fourth spare transformer for each unit, complete with all features and accessories as specified herein for a completely operable generator step-up transformer.

b. The Vendor shall furnish upon request the services of a qualified field representative during the erection period who shall perform the following:

1. Technical direction for:

(a) Unloading and transferring the transformer and associated equipment from railroad cars to foundations.

(b) Erection, assembly, and testing of all equipment.

(c) Drying and filling the transformer with oil.

2. Inspection of the assembly, clearance, alignment, and cleanliness of all major parts to the extent that this can be accomplished without disassembling the equipment.

3. Instruction of the Owner's operating personnel in the performance of component and operating tests that the Vendor may specify, including initial start-up and placement of the equipment in good operating condition, and recommendation of procedures for operating and maintaining the equipment.

3.0 WORK NOT INCLUDED

The following items are not included in the requirements of this section, but will be accomplished by others:

a. Foundations, foundation bolts, shims, and fire protection.

b. Labor and equipment for unloading and field installation.

c. Flexible connections for termination of isolated-phase bus conductors at the low-voltage bushings.

d. Available utilities:

   1. Cooler power and control: 400-volt, 3-phase, 4 wire, 50 hertz ac.

   2. Convenience outlets, control cabinet lights and heaters: 220-volt, single-phase, 50 hertz ac.

4.0 APPLICABLE CODES AND STANDARDS

The following codes and standards are applicable to the Work, to the extent specified herein:

a. American National Standards, Institute (ANSI):

   1. C37.20, "Switchgear Assemblies, Including Metal-Enclosed Bus."

   2. C57.12.00, "General Requirements for Liquid-Immersed Distribution, Power, and Regulating Transformers."

   3. C57.12.70, "Terminal Markings and Connections for Distribution and Power Transformers."

   4. C57.12.90, "Test Code for Distribution, Power, and Regulating Transformers" (IEEE 262).

   5. C57.13, "Requirements for Instrument Transformers."

   6. C57.98, "Guide for Transformer Impulse Tests" (IEEE 93).

   7. C59.131, "Guide for Acceptance and Maintenance of Insulating Oil in Equipment" (IEEE 64).

8. C62.1, "Surge Arresters for Alternating-Current Power Circuits" (IEEE 28).

9. C68.1, "Techniques for Dielectric Tests" (IEEE 4).

10. C68.2, "Techniques for Switching Impulse Testing" (IEEE 332).

11. C76.1, "General Requirements and Test Procedure for Outdoor Apparatus Bushings" (IEEE 21).

12. C76.2, "Electrical, Dimensional, and Related Requirements for Outdoor Apparatus Bushings" (IEEE 24).

13. N45.2.2, "Packaging, Shipping, Receiving, Storage and Handling of Items for Nuclear Power Plants."

14. Y14.15, "Standard Drafting Practices for Electrical and Electronics Diagrams," including Supplements Y14.15a and Y14.15b.

b. American Society for Testing and Materials (ASTM):

D 635-72, "Test for Flammability of Self-Supporting Plastics."

c. National Electrical Manufacturers Association (NEMA):

1. 107 (R 1971), "Method of Measuring Radio Noise" (EEI Publication G9).

2. ICS-1, "General Standards for Industrial Control and Systems."

3. ICS-4, "Terminal Blocks for Industrial Control Equipment and Systems."

4. ICS-6, "Enclosures for Controls and Systems."

5. TR98, "Guide for Loading Oil-Immersed Transformers with 65°C Average Winding Rise."

6. National Fire Protection Association (NFPA) 70, "National Electrical Code."

7. Institute of Electrical and Electronics Engineers (IEEE):

   262B-1977, "Trial Use Dielectric Standard for Power Transformers for Operation on Effectively Grounded Systems, 345 kV and Above."

5.0 SUPPLEMENTAL DATA

The following supplemental data is applicable to the Work, to the extent specified herein:

a. The documents listed on the contents page as attachments.

b. Transformer losses:

   1. Transformer no-load and load losses as well as auxiliary power requirements will be evaluated using the factors listed below:

      (a) No-load (iron) - $Later/kW.

      (b) Load losses (copper) - $Later/kW.

      (c) Auxiliary power requirements - $Later/kW.

   2. If either or both the no-load and the total losses fail to meet guarantees, the Owner shall at his option and as an alternate to rejection, require a reduction in the price of a transformer equal to the excess losses multiplied by the loss evaluation factors specified herein.

6.0 VENDOR DATA

6.1 The Vendor shall furnish data in accordance with the attached equipment data requirements.

6.2 The Vendor data shall include:

a. Dimensional front, side, and top views of the assembled transformer, including the following information:

   1. Bill of material which shall give the description, quantity, rating, manufacturer, and catalog or part number for each accessory item.

   2. Necessary dimensional information for coordination with the Owner's high-voltage connections and generator isolated-phase bus duct.

3. Location of the control cabinet, ground pads, lifting lugs, jacking points, and all accessories.

4. Dimensional tolerances for mating with foundation and low-voltage bus duct.

5. Transformer weight empty and full, core and coil weight, and volume of oil.

b. Clearance drawing of transformer shown in shipping position on the transporter.

c. Detail drawings of bushings, low-voltage bushing flanges, baseplate, and bushing terminal pads.

d. Schematic wiring diagrams.

e. Wiring connection diagrams covering all electrical devices. The connection diagrams shall be in accordance with ANSI Y14.15 and the following:

1. Switch developments shall be shown.

2. Internal connections of all devices and relays shall be given.

3. Control panel devices and terminal blocks shall be shown in their approximate physical positions.

4. Drawings from a typical previous job are not acceptable. Drawings made for this specific job are required.

f. A nameplate drawing.

g. Recommended spare parts list.

6.3 Detailed operating and maintenance manuals shall be furnished covering the following equipment and information:

a. Loading onto and unloading off transporter.

b. Lifting, moving, handling, setting on foundation, and protection from weather at site, prior to energization.

c. Installation of bushings and cooling equipment, including radiators, valves, pumps, fans, and winding temperature monitoring equipment.

d. Requirements for insulating oil, including acceptable types, tests, filtering, and reconditioning.

e. Vacuum filling, gasket installation, and operation of oil preservation system.

f. Mounting, connection, testing, calibration, and adjustment of accessory devices, such as liquid level indicator, pressure relief device, vacuum gage, and sudden pressure relay.

g. Primary and secondary connections, phasing checks, and initial energization.

h. Recommended and required tests.

i. Changing tap settings.

j. Removal of bushing current transformers.

k. Complete parts list.

7.0 DESIGN REQUIREMENTS

The generator step-up transformer shall be designed to operate under the following requirements and have the following features:

a. The transformers shall be two-winding, outdoor type, single phase, oil-immersed, forced-oil, forced-air cooled FOA, 50 hertz.

1. Rated output:

   3 - 145/162.4 MVA FOA, 45°C/55°C

2. Temperature rise:

   (a) Average - 55°C (by resistance methd) above a 50°C (122°F) ambient maximum and 40°C (104°F) average for 24 hours.

   (b) Hot spot - 55/70°C above a 50°C (122°F) ambient.

3. High-voltage winding:

   (Later) kV with 2, 2 1/2% full capacity (FC) taps above and 2, 2 1/2% FC taps below (Later) kV.

4. Low-voltage winding:

   Later kV, without taps.

5. Impedance:

   10% (±7 1/2% tolerance) on transformer MVA base 145 MVA at 45°C.

6. Insulation level:

   (a) High-voltage winding (Later) kV nominal system voltage - (Later) kV BIL, (Later) kV low frequency test to ground, graded to (Later) kV BIL (Later) kV at the neutral.

   (b) Low-voltage winding (Later) kV BIL, (Later) kV low frequency test to ground.

7. Bushing voltage class:

   (a) High-voltage Line - (Later) kV (high creep).

   (b) High-voltage neutral - (Later) kV.

   (c) Low-voltage line - (Later) kV.

8. Operation above rated voltage:

   The transformer shall be capable of operating at 110% of high-voltage tap rated voltage at no load and 105% of the high-voltage winding tap rated voltage while delivering the maximum rated output MVA at 80% power factor, without exceeding the limiting temperature rise.

9. Short circuit withstand:

   The transformer, including bushings, shall have thermal and mechanical ability to withstand external short circuits as follows:

   (a) A short circuit on the low-voltage side of transformer as described in ANSI C57.12.00. The fault current magnitude shall be based on a (Later) MVA transmission system fault capacity and the fault duration shall be (Later) seconds.

(b) A short circuit on the high-voltage side of the transformer with a generator that is operating at 105% of rated voltage and has only an exciter field breaker. The genreator rating and characteristics are as follows:

(1) Rating: 350 MW, 0.85 pf, (Later) volts.

(2) Synchronous reactance (X'd): (Later) per unit.

(3) Transient reactance (X'd): (Later) per unit.

(4) Subtransient reactance (X'd): (Later) per unit.

(5) Field time constants: Tdo = (Later) seconds, Tdsc - (Later) seconds.

b. Winding connections:

1. Transformers shall be designed for the following winding connections:

(a) High-voltage - wye, with solidly grounded neutral.

(b) Low-voltage - delta.

2. Three-phase transformesr shall have internal low-voltage delta and high-voltage wye connections, with neutral brought out to a single bushing. Connections shall be arranged to give ANSI standard phase displacement with the high-voltage line-to-line the low-voltage line-to-line by 30 degrees.

c. Insulating oil:

Oil shall be supplied by the Vendor and shall be of a brand approved by the Vendor. The oil shall meet the dielectric strength requirements specified in ANSI C57.12.00.

d. Overload operation:

The transformer shall be designed to carry overloads within the limits established by NEMA TR98.

e. Noise level:

1. The sound pressure level of the transformer noise shall not exceed 90 dBA when measured at a distance of 1.5 meters (5 feet) horizontally from the major surfaces of the transformer and at a height of 1.5 meters (5 feet) above the mounting plane, using the A-scale of a standard sound level meter at slow response.

2. Noise levels shall be achieved with transformer loaded and all fans operating.

7.2 MECHANICAL DESIGN FEATURES

a. Transformer tank:

1. The transformer tank shall be of all welded construction, designed to withstand full vacuum, and suitable for vacuum filling in the field without use of temporary bracing. When the tank cover is welded to the tank, a gasket or shield shall be permanently located to prevent the entrance of weld spatter into the tank. The top cover shall include manholes for access to the interior. The manholes shall be provided with covers and reusable gaskets, with means provided to prevent overcompression. Oil shall be sealed from the atmosphere to prevent moistue absorption, oil contamination, oxidation, and sludging. The oil preservation system shall be the pneumatic pressure type, nitrogen pressure type, or sealed tank, constant oil pressure type. All accessories necessary for making the oil preservation complete and operative shall be furnished as part of the transformer.

2. The transformer base shall be designed to permit skidding the transformer in two directions, parallel to either centerline. It shall be possible to move the transformer on or off its foundation without removing oil, bushings, or tank-mounted coolers.

3. Jacking steps or brackets located 350mm (14 inches) above the base, projecting at least 250mm (10 inches) beyond the base, and clear of the base shall be provided. Provisions shall also be included for lifting the core and coils and the cover.

4. Two grounding pads with NEMA standard tapped holes shall be located at the base of the tank on diagonally opposite corners. For three-phase units, a copper ground bus shall be furnished and connected from the high-voltae neutral bushing to one ground terminal pad at the base of the transformer. The Vendor shall furnish the ground bus complete with insulators, mounting pads, connectors, and all necessary hardware.

5. Valved connections 50mm (2 inches) for filter press accommodation shall be supplied at the top and bottom of the transformer tank. The lower connection shall be suitable for draining the tank and shall be provided with a liquid sampling valve.

6. The transformer shall be stable (freestanding) with all oil removed and with bushings, radiators, and surge arresters in place.

7. Facilities for vacuum filling shall be provided, including a 75mm 3-inch standard pipe plug and weatherproof cap on top of the transformer for vacuum pump connection.

8. The complete transformer, including all oil tanks, filled with oil shall withstand a pressure of 75 kilo pascals inside the top of the tank for 6 hours.

b. Cooling and control equipment:

1. Transformers and all accessories shall be suitable for continuous operation at rated MVA with ambient temperatures of 50° C (122°F) maximum and an average ambient temperature of 40° C (104°F) for any 24-hour period.

2. The transformer shall be equipped with oil pumps and air-cooled heat exchangers mounted on the tank. Isolating valves shall be provided for all detachable heat exchangers, coolers, or pumps, so that replacement may be achieved with a minimum of time and effort and without removing the transformer oil. The pump and fan motors shall be individually accessible to allow replacement without deenergizing the entire cooler or removing large sections of sheet metal.

3. The oil pump assembly shall be flange mounted and bolted, not welded. Coolers shall be removable and there shall be valves at the top and bottom connections of the cooler piping system between the flange connections and tank. There shall be a drain plug at the bottom of each cooler. Cooler mountings shall be such that transformer vibration will not cause excessive wear in the equipment bearings.

4. The oil pumps and heat exchangers shall be arranged in two groups so that with one group operating, the transformer will carry at least (Later)% of the 55° FOA rated output continuously without overheating.

5. With the coolers under automatic control, provision shall be made for starting a preselected group of coolers when the transformer is energized. The remaining group shall start automatically from the winding hot-spot temperature relay. Equipment shall be included for manual selection of either group as the initial operating pump.

6. Provisions shall be made for the selection of either manual or automatic control of the coolers. When manual control is selected, each cooler group shall be independently operable.

7.3 ELECTRICAL DESIGN FEATURES

a. Windings:

All conductors and leads shall be copper.

b. Bushings:

1. Low-voltage:

Low-voltage bushings shall be rated (Later) kV, (Later) kV BIL, 50 hertz and be suitable for use with isolated-phase bus having a total internal temperature of (Later)^{o} C. Bushings shall be top mounted through the tank cover and spacing shall be coordinated with the spacing of the isolated-phase bus duct. Suitable flanges shall be provided at each bushing to coordinate with the bus enclosure flanges. Flexible connections will be provided with the isolated-phase bus equipment.

2. High-voltage:

High-voltage line bushings and the neutral bushing shall be mounted within 30° of the vertical. The line bushings shall be coordinated with the transformer insulation BIL and shall have a wet switching surge value not less than that of the transformer. The line bushings shall be interchangeable with the ANSI industry standard bushing of its class. External parts of the line bushings shall be designed for (Later) kV BIL creep distances (high creep). The high side neutral bushing shall be (Later) kV, (Later) kV BIL. Bushings shall be porcelain (Later) Stud connectors shall be included with the high-voltage bushings to accommodate (Later), (Later) kcmil conductors per bushing. Stud connectors shall have a four-hole pad and NEMA standard drilling for four 13mm (1 inch) bolts on 45mm (1 3/4 inches) centers for the Owner's connectors. Both faces of the four-hole pad shall be available for the Owner's line connectors. Connection to the bushing stud shall use the two-bolt type or Engineer-approved equal; a single clamping bolt on the bushing stud is not acceptable. Liquid-filled bushings shall be supplied with liquid-level indication. High-voltage line bushings and the high side neutral bushing shall have capacitance taps, stainless steel plugs for pressure testing, and provisions for power-factor testing.

7.4 ACCESSORIES

a. Tap changer:

1. A manual, deenergized tap changer shall be provided. The changer shall be equipped with a handle for operation outside the tank with provisions for locking in any position. The tap changer handle shall provide visual indication of tap position and shall be accessible in all positions to an operator standing at grade level. A permanently affixed red warning plate shall be located near the tap changer handle and shall read "DO NOT OPERATE TAP CHANGER WHILE TRANSFORMER IS ENERGIZED."

2. The tap changer mechanism shall be located so that it can be inspected, repaired, or replaced without removing the transformer oil.

b. Bushing current transformers:

1. One bushing current transformer, (Later)/5 amperes, (Later) ratio, relaying accuracy class C800 on the high-voltage neutral bushing.

2. One bushing current ratio transformer, (Later) 5 amperes, (Later) ratio, relaying accuracy class (Later) on each low-voltage bushing.

3. The current transformers shall conform to the requirements of ANSI C57.13.

4. Provisions shall be made to allow field removal of the bushing current transformers.

c. Surge arresters:

1. One single-pole, (Later) kV station-type surge arresters shall be furnished and mounted on each tank. Nominal system voltage rating will be (Later) kV, line-to-line, (with a solidly grounded neutral). The arresters shall be capable of withstanding 110% of the continuous rating for 10 minutes and resealing (i.e., interrupt power-follow-current against this voltage) if sparkover occurs. The porcelain on the arresters shall be (Later) with high creep (Later) inches design.

2. The surge arresters shall be individually grounded to the tank and to the tank grounding pad by 4/0 (AWG) stranded copper ground conductors.

3. A leakage current indicator and discharge counter shall be provided for each arrester and mounted at a readable height on the transformer tank.

4. An insulated base and insulated cable between the arrester ground connection and the counter shall be furnished for each arrester.

d. Protective devices:

The following accessory equipment shall be provided on each transformer tank for the control and protection of the transformer:

1. Magnetic liquid level gage with alarm contact.

2. Dial-type thermometer to indicate top oil temperature, complete with externally reset maximum reading pointer and alarm contact.

3. Self-resetting pressure relief device with alarm contact and mechanical target.

4. Vacuum/pressure gage to indicate the gas pressure inside the tank.

5. Winding temperature indicator relays with three sets of adjustable contacts to operate pumps, fans, and alarms. The indicator shall have an indicating dial and maximum reading pointer with external reset.

6. Oil flow indicator on each oil pump, with contacts to indicate a common remote alarm on low oil flow. The alarm circuit shall become operative only after a time delay sufficient to allow normal oil pressure to build up after motor startup.

7. Sudden pressure relay (rate-of-rise) as manufactured by General Electric Company or Westinghouse Electric Corporation or as approved equal, equipped with alarm and control contacts arranged for remote electrical reset.

8. Calibrated undervoltage relay with alarm contact to alarm on cooler power supply failure.

9. One temperature detector coil, rated 10 ohms at 25°C, for measurement of top oil temperature for the Owner's remote measurement.

10. A transformer using a nitrogen pressure system shall be equipped with a combustible gas analyzer to continuously monitor the gas in the transformer and to initiate an alarm if combustible gases become excessive. Transformers using an air pressure system or a sealed tank, constant pressure system shall be equipped with a gas detector relay to indicate the accumulation of gases in the transformer and to initiate an alarm if gases become excessive. Facilities shall be provided for combustible gas test connection from ground level.

11. Gages shall be mounted at eye level, and indicators shall be legible by an operator standing at grade level.

12. The alarm contacts specified herein shall be provided for use with the Owner's remote annunicator. They shall be rated 125 volts, 0.2-ampere dc inductive.

e. Nameplates:

Nameplates shall be provided for all control panel devices in accordance with the following:

1. Nameplates shall be laminated and shall have vertical black capital letters on a white background.

2. Nameplates shall be securely attached with machine screws. Self-tapping screws are not acceptable.

3. Each device shall be identified by a nameplate. Nameplates shall be located above switches and pushbuttons and below meters and relays.

4. Fuses, auxiliary relays, terminal blocks, and other devices mounted inside the panels shall be identified either by nameplates or by printed or stenciled inscriptions.

7.5 MOTORS

Pump and fan motors shall have a nameplate voltage rating of 380 volts and shall be sized to operate within their nameplate ratings. Fan motors shall be provided with thermoguards in all three phases.

7.6 POWER SUPPLIES

a. Two sources of 400-volt, 3-phase, 4 wire, 50-hertz ac power will be made available for operating cooling equipment. Loss of the preferred source voltage shall cause transfer of the cooler loads to the other source. Restoration to the preferred source shall be manual. Alternatively, one-half of the cooling equipment may be connected to each source with provisions for transfer to the second source if one source fails. Transfer shall not actuate the sudden pressure relay. Interlocks shall be provided to prevent paralleling the two sources.

b. Control voltage shall be 220 volts, 50 hertz, obtained by transformation from the 3-phase, 400-volt source. Control transformers and changeover equipment shall be furnished with this equipment.

c. No more than three fans shall be serviced from one circuit breaker.

d. Each pump motor shall have a separate circuit breaker.

e. Pump and fan circuit breakers shall have thermal-magnetic trip, ambient compensated elements in three phases.

7.7 CONTROL PANEL AND WIRING

a. Control panel:

1. The control panel shall be weatherproof and mounted within easy reach of a person standing at grade level. It shall contain all the equipment necessary for controlling the oil pumps and fans for the transformer. Control, alarm, and current transformer secondary wiring shall be brought out to terminal blocks in a split-type junction box for termination of the Owner's field wiring. The box shall be mounted below and adjacent to the control cabinet. The bottom half shall be removable for field drilling to match the Owner's conduits and will remain in place during transformer removal.

2. The 400-volt equipment and terminal blocks shall be grouped separately from the 220-volt equipment. The 400-volt terminal blocks shall be equipped with insulating covers labeled "400 VOLT".

3. Space heaters:

(a) Space heaters shall be provided in the panels to prevent condensation of moisture while the equipment is out of service. The space heaters shall be rated 220 volts. The space heaters shall be provided with a substantial perforated or expanded metal guard for personnel protection.

(b) The heaters shall be mounted so that the heater terminals and connecting wiring are below the heater to prevent damage from rising heat. Adequate distance shall be maintained between heaters and adjacent wiring to avoid heat damage.

4. Internal illumination suitable for operation on 220-volt ac shall be provided.

5. A single-pole fuse shall be provided for protection of the space heater and internal lighting circuits.

6. A copper ground bus shall be provided inside the panel fastened to the frame in such a way as to make good electrical contact. Provisions shall be made for connection of the Owner's 4/0 cable.

   NOTE: If the panel is longer than 1200mm, holes shall be drilled on both ends of the ground bus.

7. A solid-state annunciator with integral lamp and logic providing 1SA-1 type sequence shall be provided to alarm each alarm condition specified herein. The annunciator shall include:

   (a) Acknowledge, test, and reset functions.

   (b) A remote transmit relay, independent of the local visual indication, for indication in the main control room of any local alarm condition, including loss of control power at the local panel.

   (c) An audible device (buzzer) to sound locally.

   The annunciator shall operate from a 220-volt, 50-hertz ac supply.

8. Convenience outlets shall be provided with protective fuses and wired to terminal blocks suitable for connection to the Owner's 220-volt, single-phase ac supply. The convenience outlets shall be installed, wired, and grounded in accordance with NFPA 70.

b. Wiring:

1. Wiring between the control panel and devices mounted on the transformer shall be enclosed in rigid galvanized steel conduit attached to the transformer tank. Steel wire armored cable or liquidtight, flexible steel conduit shall be used where flexibility is required, such as for wiring at motors. Conduits shall be of adequate size to allow wiring removal and replacement.

2. The Engineer will provide details of any special control and interlocking functions required.

3. Current transformer secondary wiring shall be terminated on separate, shorting-type terminal blocks with sealable covers.

8.0 PERFORMANCE REQUIREMENTS

The generator step-up transformer, when installed and functioning, shall meet or exceed the design requirements listed in article 7.0.

9.0 MATERIAL REQUIREMENTS

Except where otherwise specified herein, materials of construction shall be the Vendor's standard which has proven satisfactory in the past and meets applicable code requirements.

10.0 FABRICATION AND ASSEMBLY REQUIREMENTS

The generator step-up transformer shall be fabricated and assembled in accordance with the following requirements:

a. The codes and standards stated in article 4.0.

b. The Vendor's QA/QC program.

11.0 INSTALLATION REQUIREMENTS

None

12.0 PERSONNEL REQUIREMENTS

The Vendor shall employ personnel qualified to perform the Work in accordance with the Vendor's QA/QC program.

13.0 INSPECTIONS AND TESTS

The following inspections and tests shall be performed:

13.1 The following routine tests shall be made on the transformer in accordance with ANSI C57.12.90:

a. Resistance measurements of all windings on the rated voltage connection of each transformer and at the tap extremes of the first transformer.

b. Ratio tests on the rated voltage connection and on all tap connections.

c. Polarity test on the rated voltage connection.

464

d. Phase relation test on the rated voltage connection.

e. No-load losses at rated voltage and frequency on the rated voltage connection.

f. Exciting current at 100% and 110% of rated voltage and with rated frequency on the rated voltage connection.

g. Impedance and load loss at rated current on the rated voltage connection of each transformer and on the tap extremes of the first transformer.

h. Temperature rise tests at the 55°C rating. Combustible gas shall be monitored and analyzed during the test. This test shall only be required on the first transformer prior to impulse tests.

i. Applied potential tests.

j. Induced potential test (low frequency) in accordance with the BIL purchased.

13.2 OTHER TESTS

a. The Vendor shall perform impulse tests on the transformer in accordance with ANSI C57.12.90, ANSI C57.98, and , The tests shall include applications of full waves and chopped waves on all line and neutral terminals, and shall be made with bushings installed. In case of failure, the transformer shall be repaired and the same tests reapplied with no additional cost to the Owner.

b. Switching surge tests shall be performed on the transformer in accordance with ANSI C57.12.90.

c. The transformer shall be excited to 110% of rating before and after the impulse tests are made, and the change in exciting current and core loss noted.

d. The transformer shall be corona tested at the low-frequency induced insulation test voltage. The equipment and general method used shall be in accordance with NEMA 107, except that capacitance taps on high-voltage bushings may be used in place of separate coupling capacitor and sphere gaps. The radio influence voltage (RIV) shall not exceed 500 microvolts.

e. The transformer shall be corona tested at 150% of operating voltage for 1 hour. The RIV level shall not exceed 150 microvolts.

f. The bushings of this transformer shall receive the following production tests:

1. Power factor and capacitance measurement.

2. One-minute dry withstand test at 60 hertz, as follows:

Bushing	Class	Test Voltage
High-voltage	Later kV (high creep)	Later kV
Neutral	Later kV	Later kV
Low voltage	Later kV	Later kV

g. Power factor tests shall be made to give a basis for future field tests. The power factor of the completely assembled transformer shall not exceed 1% on the high-voltage and 2% on the low-voltage bushings at 20°C and 50 hertz.

h. Top oil pressure test 75 kilo pascals gage for 6 hours).

i. Zero sequence impedance measurement.

13.3 FUNCTIONAL TESTING

Prior to shipment, the control panel shall receive a thorough shop electrical functional test.

a. Indicating lamps shall be checked by applying design voltage.

b. Indicators, meters, and recorders shall be checked by applying specified inputs and observing the scale deflection in accordance with ANSI C37.20, Section 5.3.4.3.

c. Switches shall be tested in each switch position to verify conformance to the required switch development.

d. Individual annunciator points shall be checked for correct operation of audible alarm, acknowledge, test, and reset functions.

13.4 GENERAL REQUIREMENTS

a. Testing, inspection, and acceptance criteria shall conform to applicable codes and standards specified in article 4.0.

b. All test instruments used shall have current calibration traceable to a National Bureau of Standards primary standard or equivalent.

c. Wiring shall be visually examined for workmanship and conformance with the latest "approved" or "as built" drawings.

d. Screws and nuts securing wiring to terminals shall be checked for tightness.

e. Control wiring shall be tested for correctness, absence of short circuits, and continuity in accordance with ANSI C37.20, Section 5.3.4.1.

f. Control wiring shall be tested at a potential 1500 volts to ground at 60 hertz for 1 minute in accordance with ANSI C37.20, Section 5.3.4.2 and NEMA ICS-1, Section 109.05. Meters, solid- state devices, and instruments shall be disconnected during this test.

13.5 TEST REPORTS AND CERTIFICATION

a. Results of the production tests shall be accurately recorded and appropriate test reports prepared. The final reports shall include photographic or Xerox copies of all original data sheets as recorded (i.e., original handwritten record in lieu of transcribed copy). The final reports shall be reviewed by competent technical personnel who shall certify that the equipment tested meets the requirements of this Specification.

b. Certification of design tests shall contain statements of when, where, and by whom the tests were performed and shall state the results of the tests. These certifications shall be signed by a responsible employee of the Vendor.

14.0 CLEANING, CORROSION PROTECTION, AND COATING

14.1 CLEANING

Parts shall be free from dirt, scale, and unwanted grease. The equipment shall be handled throughout production and packaging so that no foreign matter will be introduced into or onto the equipment and impair its mechanical or electrical operation.

14.2 CORROSION PROTECTION AND COATING

a. All equipment shall be thoroughly chemically cleaned and treated for rust prevention. All equipment shall receive the Vendor's standard prepaint treatment and primer coats.

b. The transformer shall be finished with paint in accordance with the Vendor's standard finish paint treatment. In addition, all steel surfaces shall have a minimum of two finish coats.

c. Machined surfaces, including shafts, bearings, and couplings, shall be adequately protected against corrosion and damage during shipment and outdoor storage for 1 year. Openings shall be suitably capped with metal covers where possible.

15.0 MARKING AND IDENTIFICATION

15.1 Each package, skid, box, and crate shall be marked on the outside with the following information so that it is readily visible:

a. Owner's Name
Project identification
Street address
City, state, and country

b. The Owner's purchase order number.

c. Any special instructions for handling.

d. The weight of the box, crate, etc.

e. The Engineer-assigned tag number(s) and Bill of Material number(s).

15.2 The transformer shall have a permanently affixed data plate made from stainless steel, permanently imprinted with at least 5mm high letters. The data plate shall contain the information required by ANSI C57.12.00 and data such as liquid level and temperature data, terminal connections for windings, and reference to accessories wiring connection diagrams, operating pressures of oil preservation system, and vacuum filling. Impedance values shown on the data plate shall be in accordance with the test report. The transformer connection diagram shall correspond to the view from the same side of the transformer that bears the data plate.

15.3 The data plate shall be located where it is readily visible and shall be securely attached with stainless steel, Phillips-head, self-tapping screws.

16.0 PACKAGING, SHIPPING, AND STORAGE

16.1 Packaging and shipping shall meet ANSI N45.2.2, Sections 2.7, 3 (including Appendix A3), 4.1, 4.2, 4.3, and 4.4. The classification required by Section 2.7 for the items specified herein is level B. (This equipment is not intended for use in a nuclear power plant; ANSI N45.2.2 is referenced only because it is a comprehensive and accepted standard.)

16.2 The Vendor shall furnish a schedule of shipping packages, including weights, dimensions, and an accurate, complete description of contents.

16.3 The transformer core and coil assembly shall be shipped in an upright position in its own tank. The cooling unit, bushings, and minor accessories shall be removed for shipment. The transformer shall be shipped without oil and filled with nitrogen or dry air to a pressure slightly above atmospheric pressure. A three-element impact recorder shall be installed on each transformer tank. The average reading during shipment shall not exceed 50% of full recorder scale. Upon completion of transit, the charts of the recorder shall be made available for review by the Owner or his representative. The Owner reserves the right to be supplied with copies of those portions of charts which indicate switching speeds greater than 6KM per hour (3.7 mph) and/or equivalent vertical shocks.

16.4 The required amount of insulating oil shall be shipped by tank truck directly to the jobsite.

469

17.0 ACCEPTANCE CRITERIA

The Vendor shall make sure that he has complied with the following requirements before he submits the Work for acceptance:

a. The Vendor shall obtain an "Approved" status from the Owner for the Vendor drawings required in paragraph 6.0.

b. The Vendor shall be able to distribute operating and maintenance manuals in accordance with paragraph 6.0 prior to equipment delivery.

EQUIPMENT DATA

(CLIENT)

(PROJECT)

STEP-UP TRANSFORMER

The bidder shall return one copy of this form with the bid, with all blanks filled in and related information attached

(BIDDER'S NAME)

(MANUFACTURER'S NAME)

(QUOTATION NUMBER)

1. Complete description of transformer and accessories. attach

2. Estimated net weights of:

   a. Core and coils Kg (lb) _____

   b. Case and fittings Kg (lb) _____

   c. Insulating liquid Kg (lb) _____

   d. Total weight of transformer Kg (lb) _____

3. Shipping weight of largest piece Kg (lb) _____

4. Approximate dimensions (including shipping dimensions) with and without coolers. attach

5. Exciting current and no-load losses at 100%, 105%, and 110% of rated voltage. attach

6. Estimated total capacitance to ground, measured at the low-voltage winding. F _____

7. Guaranteed losses in watts at rated voltage as follows:

   a. No load W _____

EQUIPMENT DATA

(CLIENT)

(PROJECT)

STEP-UP TRANSFORMER

(BIDDER'S NAME)

b. Full load at 55°C W _____

c. Auxiliary power W _____

8. Percent positive and zero sequence impedances with tolerances. _____

9. Estimated efficiencies at 100%, 75%, and 50% of base rating.
   100% _____
   75% _____
   50% _____

10. Failure rate data for transformers of the proposed design, covering both inservice and factory test failures. The list should include transformer type, MVA, voltage, cause of failure, and time required to repair. attach

11. Calculated continuous loads that can be maintained without exceeding normal temperature rise for one two, etc., up to full complement of coolers in operation. attach

12. Total kVA required for each cooler. KVA _____

13. Number of coolers and the number and rating of fans per cooler. attach

14. Description of standard painting procedure. attach

15. Description of method of shipment, with permanent cover or temporary cover, and extent of field assembly required in addition to the installation of bushings and coolers. attach

EQUIPMENT DATA

(CLIENT)

(PROJECT)

STEP-UP TRANSFORMER

(BIDDER'S NAME)

16.	Complete description of type of oil preservation system and combustible gas monitoring.	attach
17.	Complete description of type of oil preservation system and combustible gas monitoring.	attach
18.	Description of transformer overload capability.	attach
19.	Recommended distance between transformer and fire wall. M (ft)	
20.	Expected noise level of transformer specified, special without noise reduction provisions. dBA	
21.	Description of special noise reduction provisions needed to bring transformer in compliance with paragraph 7.1.e.	attach
22.	Calculated X/R ratio.	
23.	Type of impact recorder the VENDOR plans to install in accordance with paragraph 16.3.	
24.	A list of operating installations of transformers similar to those specified herein (experience list).	attach
25.	Time required for delivery of completed Work, starting from date of drawing approval by Engineer. wks	

EQUIPMENT DATA

(CLIENT)

(PROJECT)

STEP-UP TRANSFORMERS

The bidder shall return one copy of this form with the bid, with all blanks filled in and related information attached.

(BIDDER'S NAME)

(MANUFACTURER'S NAME)

(QUOTATION NUMBER)

LAKHRA POWER FEASIBILITY STUDY

SPECIFICATION I-1

INSTRUMENTATION AND CONTROL SYSTEM

LPS/2B3826/D7

475

SPECIFICATION I-1

INSTRUMENTATION AND CONTROL SYSTEM

TABLE OF CONTENTS

Item	Title	Page
1.0	DESCRIPTION OF WORK	1
2.0	WORK INCLUDED	1
3.0	WORK NOT INCLUDED	2
4.0	APPLICABLE CODES, STANDARDS, AND REGULATORY REQUIREMENTS	2
5.0	SUPPLEMENTAL DATA	3
6.0	VENDOR DATA	6
7.0	DESIGN REQUIREMENTS	6
8.0	PERFORMANCE REQUIREMENTS	40
9.0	MATERIAL REQUIREMENTS	40
10.0	FABRICATION AND ASSEMBLY REQUIREMENTS	40
11.0	INSTALLATION REQUIREMENTS (NONE)	40
12.0	PERSONNEL REQUIREMENTS	40
13.0	INSPECTIONS AND TESTS	40
14.0	CLEANING, CORROSION PROTECTION, AND COATING	41
15.0	MARKING AND IDENTIFICATION	41
16.0	PACKAGING, SHIPPING, AND STORAGE	41
17.0	ACCEPTANCE CRITERIA	41

- 4/6

TABLE OF CONTENTS
(Continued)

Attachments

1. Section 7.07, Burner Management System (By Others)

2. Control and Instrumentation Tables

SPECIFICATION I-1

INSTRUMENTATION AND CONTROL SYSTEM

1.0 DESCRIPTION OF WORK

This specification describes the Instrumentation and Control System to be installed at 2 x 350 MW coal-fired power plants in Pakistan for the Water and Power Development Authority (WAPDA).

2.0 WORK INCLUDED

The work included is the design, furnishing, testing, delivery, construction assistance, and commissioning of the following equipment. All components to form a complete and workable system, whether specifically identified herein or not, are required.

a. Boiler control system including the following major loops for each unit:

   1. feedwater control

   2. steam temperature control

   3. combustion control

   4. furnace pressure control

   5. cold end air heater temperature control

b. Balance of plant control system including the following major loops for each unit:

   1. condensate system, including hotwell level, condensate pumps, low pressure heater levels, and deaerator level

   2. feedwater system, including feedwater pumps, high pressure heaters, feed pump recirculation

   3. miscellaneous auxiliary controls such as circulating water pumps, closed cycle cooling water pumps, tank levels, auxiliary steam desuperheating, and compressors for service and instrument air systems.

c. Main control panel and auxiliary control panel including all operator interface equipment such as recorders, annunciators, indicators, control switches, indicating lights, and manual/auto selector stations.

478

d. Field mounted equipment including transmitters, process switches, locally mounted gauges and thermometers, control valves, and control drives.

e. Monitoring and data acquisition system including CRT terminals, logging, trending, alarm recording, and graphic display functions all furnished as an integral part of the plant control system.

f. Water quality analysis system including sample probes, analyzers, sample coolers, centralized panel, and all associated recording and alarm functions.

g. Training simulator including replica of main control panel, instructor's console, and computer to simulate response of boiler and auxiliary equipment.

3.0 WORK NOT INCLUDED

The following work is not included in this specification but will be accomplished by Others:

a. Receiving, unloading, storage, and installation of equipment at the jobsite.

b. Burner management system. A description of this system is included as Attachment 1 for the Vendor to detail his interface.

c. Supply of instrumentation and control equipment for the main turbine-generator and ancillary equipment.

d. Auxiliary boiler controls.

e. Supply of flue gas water cooled probe, tube and drum metal thermocouples, and airflow venturi sections.

f. Supply of electrical power supplies external to control system cabinets.

4.0 APPLICABLE CODES, STANDARDS, AND REGULATORY REQUIREMENTS

4.1 The equipment furnished under this specification shall be in accordance with accepted current practices of the American electric utility industry and as governed by the following codes which are specifically referenced elsewhere in this specification:

a. American National Standards Institute (ANSI)

B31.1	Power Piping
B16.10	Face-to-face and end-to-end dimension of ferrous valves
B16.11	Socket welding and threaded forged steel fittings
B16.25	Buttwelding ends
B16.34	Steel valves
B16.104	Control valve seat leakage

b. American Society of Mechanical Engineers (ASME)

Boiler and pressure vessel code, Section II, Material Specification

c. National Fire Protection Association (NFPA)

85E Pulverized Coal Fired Boilers

d. Occupational Safety and Health Administration Standards (OSHA); National Consensus Standards and Established Federal Standards, as described in the Federal Register, Volume 36, Number 105, Department of Labor, Occupational Safety and Health Administration.

4.2 Application of codes and standards referenced herein requires the application of the latest issue date and of all addenda adopted as of the date of the purchase order. Later revisions may be involved only by mutual agreement between the Purchaser and Vendor.

5.0 SUPPLEMENTAL DATA

5.1 The documents listed on the contents page as attachments are applicable to the work to the extent specified herein. The Vendor shall coordinate with the steam generator Vendor to obtain the following information:

a. Steam Generator:

1. Manufacturer: _____ _____.

2. Type: _____.

3. Furnace Pressure: Balanced draft.

4. Fuel: Pulverized Lignite.

5. Capacity: 1,312.2 tonnes/hr (2,893,000 lb/h) at 13,200 kPA (1,900 psig) and 513°C (955°F).

b. Burners:

1. Type: _____

2. Number _____ total, operated as (pairs) in _____ groups. Arrangement: _____ _____.

3. Coal Valves: one per burner.

4. Air Registers: _____ total, operated as _____ in _____ groups. Arrangement: _____ _____.

5. Overfire Air Dampers: _____ total, Arrangement: _____.

c. Ignitors:

1. Type: _____.

2. Fuel: No. 2 Fuel Oil.

3. Quantity: _____.

4. Capacity: _____ Kg/sec (lb/h) at _____ kPa (psig).

d. Draft System (quantities for each unit):

1. Forced Draft Fans: quantity 2.

2. Induced Draft Fans: quantity 2.

3. Air Heaters: quantity 2 or 4.

4. Dampers:

(a) Forced Draft Fan Outlet: quantity 2.

(b) Forced Draft Fan Inlet Vanes: quantity 2.

(c) Induced Draft Fan Outlet: quantity 2.

(d) Induced Draft Fan Inlet: quantity 2.

(e) Air Heater Hot Gas Inlet: quantity 2 or 4.

e. Pulverizer:

1. Type: _____.

2. Quantity minimum of 5.

3. Capacity: _____ tonnes per hour.

4. Feeders: _____; _____ per pulverizer.

5. Primary Air Fans: quantity _____.

6. Dampers:

(a) Hot Air: _____ per mill.

(b) Tempering Air: _____ per mill.

(c) Primary Air: _____ per mill.

(d) Auxiliary Bypass: _____ per mill.

(e) Seal Air Damper: _____ per mill.

7. Gates:

(a) Feeder inlet.

(b) Pulverizer Outlet.

f. Control devices to be furnished by Others.

One auto/manual control selector station will be supplied for each of the following services:

1. Mill hot air, tempering air damper combinations.

2. Mill primary air dampers.

3. Feeder speed controllers.

4. Mill pairs of auxiliary bypass dampers.

5.2 The Vendor shall base his main control panel design on a single, walk-in, style panel for boiler-turbine-generator functions with inclined bench area for controls and a vertical area for indication and annunciation. A separate vertical panel shall be furnished for auxiliary control and indication purposes.

6.0 VENDOR DATA

6.1 Vendor data shall be furnished in accordance with the requirements indicated on the attached Vendor Data Requirements and Submittal Schedule (later).

6.2 In addition to the Vendor data required by Section 6.1, the CONTRACTOR (Vendor) shall furnish the following information:

a. Written System Description

b. System Logic Diagrams

c. Equipment Dimensional Drawings

d. Installation, Operating, and Maintenance Manuals

e. Electrical Connection Drawings

f. Cabinet Arrangement Drawings

g. Bill of Materials

h. Time required for fabrication and delivery after receipt of all necessary drawings and approvals.

7.0 DESIGN REQUIREMENTS

7.1 GENERAL

7.1.1 All control and instrumentation systems necessary for the control, supervision and protection of the Plant are contained within this Specification.

7.1.2 It is emphasized that this specification is intended to include all control and instrumentation requirements necessary to enable the plant to be operated safely and efficiently whether such items are specified or not.

7.1.3 Tables of Instruments have been included as Attachment 2 in order to indicate the general scope of the I&C requirements. These Tables represent guidelines only and shall be used

453

accordingly; the Vendor must ensure that all I&C is provided to conform to the control and generating philosophy detailed in this Specification.

7.1.4 A consistent control and instrumentation philosophy shall apply throughout the plant and be implemented in terms of a range of equipment exhibiting a minimum diversity of type and manufacture. The Vendor shall ensure that the design, supply and implementation of the plant control and instrumentation functions, with only agreed exceptions, shall be the direct responsibility of a single control system supplier.

7.1.5 This Specification calls for an integrated control system concept in which the plant control functions are integrated with the supervisory computer system and all signals are transmitted by dedicated direct wired connections. The system shall be microprocessor based and shall include individual hand/auto control on discrete stations and conventional indicators for essential parameters.

7.1.6 The Vendor shall demonstrate a minimum of 2 years satisfactory operational service on similar power plant application.

7.1.7 All field mounted equipment shall be rated NEMA 4 or equivalent.

7.1.8 The Vendor shall supply diagrams for all loop and logic circuits containing sufficient information to permit an evaluation of the system. It is anticipated that the diagrams will be to a simplified format and shall be identified as such.

7.1.9 After award, loop and logic diagrams may be the Vendor's standard format providing all essential details are included and that a common standard is used throughout the Plant.

7.1.10 Instrument loop diagrams which cover several loops on one drawing are acceptable only, if all the loops information (wiring terminations, cable numbers, process information, equipment information etc.) can be presented on the same sheet.

7.1.11 The design criteria for the control system shall be as follows:

a. An automatic load control range of 20 percent to 100 percent MCR (Maximum Continuous Rating).

b. A minimum continuous loading rate of 5 percent per minute over this load control range.

c. A capacity to sustain an instantaneous step increase in load of a minimum of 5 percent in support of grid frequency regulation.

d. The capability of accepting a partial or total load rejection, maintaining stable firing conditions even in the worst case of being reduced to house load and subsequent rapid reloading once the fault condition has been cleared.

e. The deviations in the main boiler control parameters based on the normal operating curve characteristics shall be as follows:

1. Under steady state conditions, superheater and reheater outlet temperatures shall be maintained within $\pm 2.8^{o}C$ ($\pm 5^{o}F$).

2. During load variations of 5 percent per minute, superheater and reheater outlet temperatures shall be maintained within $\pm 4.5^{o}C$ ($\pm 8^{o}F$).

3. Steam pressure to turbine shall be maintained within ± 5 percent of the rated pressure.

4. Flue gas oxygen shall be maintained within ± 4 percent volume of the normal operating curve.

f. The unit shall be designed primarily for continuous base load operation but be capable of rapid start-up and shutdown operation.

g. The unit shall be capable of being started up from a hot or warm condition, supervised during normal operation and shutdown from the main Control Room, without the need for any local operation or supervision.

7.1.12 A forty point annunciator shall be provided for the main control panel and the auxiliary control panel. The two annunciators shall be lamp cabinets with inputs and logic provided by the plant control system.

7.1.13 Field transmitters shall be two-wire type utilizing a 4 to 20 milliamp dc signal range. Field switches shall be interrogated with 125 vdc provided by power supplies located within the plant control system cabinets.

7.1.14 An instrument numbering system will be advised by the Owner. All instruments shall be tagged with a unique identifier based on the numbering system. All labeling shall be in the English language.

485

7.1.15 The requirements of ASME standard TDP-1, Recommended Practices for the Prevention of Water Damage to Steam Turbines used for Electric Power Generation - Part 1 shall be adhered to.

7.1.16 In general, all manual and automatic control functions shall be initiated and supervised remotely and individually from either the main or auxiliary control panel. Certain sequential type control functions are not brought into the control room and typical of this category are lube oil systems associated with a major pump or fan.

7.1.17 The boiler and auxiliaries shall be equipped with a protection system which trips the plant in case of danger conditions or if the critical process variables exceed their permissible values. Both redundancy and diversity of trip criteria shall be considered to achieve sufficient guarantee against non-operability or unnecessary operation of the system. Individual control elements shall be equipped with 'passive interlocks' to prevent the inappropriate operation of the item and 'active interlocks' to trip the item in case of dangerous operating conditions.

7.1.18 With the plant protection, supervision and control all vested in the control and instrumentation systems it is essential that their integrity shall be greater than the plant items they control. Consequently the control systems in general and especially the protection systems must be designed according to stringent failure criteria. The structure of the control system shall be primarily dictated by the system failure philosophy which shall be based on the concept of gradual degradation of control under fault conditions. The control system shall comply with the following general failure criteria:

a. No single fault shall cause the complete failure of the control system.

b. No single fault shall cause the boiler or turbine protection system to operate spuriously or cause the protection system to become inoperative.

c. The grouping of the control functions into system blocks shall be arranged such that failure of any one block will only partly degrade the control of the overall system. Such degradation shall always be manageable by operator intervention.

d. The control system shall be structured to reflect the redundancy provisions of the plant so that no single fault

within the control system can cause the failure of the duty plant and at the same time cause the standby plant to be unavailable.

e. If, as a result of a control system fault, a plant item or control function cannot respond to its controls then that item or control function shall be caused to fail to a safe condition.

To meet the above failure criteria the I&C system shall incorporate whenever practically feasible self checking facilities so that internal faults can be detected within the I&C system itself prior to any resulting disturbance to the process. In addition, the protection and safety systems shall incorporate both channel redundancy and diversity of measurement as well as self-checking and adequate test facilities.

7.1.19 To meet the stringent failure and self-checking requirement for the I&C system, measurement redundancy shall be provided for all critical plant parameters. Redundant measurements shall be provided for all such parameters which can cause a direct unit trip (drum level, furnace pressure, condenser vacuum etc.) and those on which the reliability and economic operation of the unit is most critically dependent (HP & IP steam pressure and temperature etc.).

The measurement for the functions of control, indication and protection may be combined provided that the integrity of measurement is ensured by adequate channel redundancy.

For the control of critical parameters three independent measurements shall be provided with control and indication derived from the median signal. High and low deviation from the median signal shall be alarmed and all redundant signals separately available for operator information.

For protection purposes multi-channel measurement shall be provided incorporating 2 out of 3 trip action. Facilities for the online testing of each independent channel shall be provided without loss of protection. Each measurement channel shall include discrete signal transmitters and sensor tapping points i.e. multi-channel measurement of the same process shall not be derived from a common tapping point.

The general level of measurement redundancy required is indicated in the tables of instruments.

7.1.20 The control system equipment technology shall be microprocessor-based and functionally partitioned.

487

Partitioning shall be effected in not less than six control modules so that failure of an individual controller does not result in several loops being faulted to manual control. If the Contractor's architecture does not allow partitioning, then a redundant microprocessor shall be included with fully automatic tracking and switchover capability in the event of a failure of the primary microprocessor.

The components necessary to perform the control algorithms and logic functions shall be arranged on printed circuit boards. A series of printed circuit boards or modules shall be assembled in rack mounting frames to form the complete control system. The frames shall be mounted in a cabinet (hereafter called the logic cabinet), which shall be complete with all necessary accessories, such as power supplies, internal wiring, input/output field wiring terminal blocks, and interposing relays.

The logic cabinet will be installed in the main plant control room which is an environmentally protected area. The ambient temperature in the room is normally 25.6°C (78°F), but may range from +5°C to +50°C (+41°F to +122°F) with relative humidity to 95 percent. If the cabinet requires forced ventilation, it shall be provided as an integral part of the cabinet structure. Field cable entry shall be from the bottom.

7.1.21 The following criteria shall apply to the system power supplies:

a. The Owner will furnish two separate sources of 120 volt (±10 percent), 50 hz (±3 hz), single phase power to the logic cabinet. One source will be called "primary" and the other source will be called "secondary."

b. The Contractor shall provide whatever dc power supplies are required for the system including I/O. Each dc voltage level shall have redundant diode auctioneered power supplies. The supplies shall be adjustable and normally share the load equally. In the event of a failure of one power supply, the other(s) shall immediately assume full control with no interruption of service. Each set of the dc power supplies shall be fed from a separate source of ac power.

c. The Contractor shall distribute the sources of ac power as required in the system, through centrally located circuit breakers, to provide isolation for functional operating groups.

d. Each dc power supply output shall be monitored for high voltage, low voltage, and failure conditions and dry contacts shall be available to the main plant annunciator in the event of any malfunction.

e. In the event of a loss of ac power supply to the control system, or loss of dc power within the system, controlled devices shall shut down to a safe condition (de-energized to trip).

7.1.22 Terminal blocks for Owner's field wiring connections shall be barrier type, 600 volt, with washer head binding screws and individual terminal identification. Terminal blocks shall be suitable for use with ring lug terminals. All incoming and outgoing field wiring shall be via terminal blocks. Field wiring will range in size from 12 AWG to 18 AWG. Space shall be provided within the logic cabinet for the future addition of a 10 percent increase in the number of inputs and outputs.

7.1.23 Connections from the logic cabinet to the field devices shall be made by dedicated wiring. The Contractor interface with output field devices such as motor starters and relays shall in general be with dry contacts. The Contractor shall supply heavy duty interposing relays with contacts rated 125V dc 1.0 amp inductive for all outgoing signals to solenoid valves and motor starters.

7.1.24 The control system shall incorporate on-line self-diagnostic features to verify proper operation of system hardware and related support functions such as control power, field contact interrogating power, and system modules in position. Any failures determined by the system diagnostics shall be annunciated. The diagnostics shall be capable of assisting technicians in troubleshooting faults at least to the printed circuit card level.

7.1.25 The control logic configuration shall be stored in non-volatile memory such that no battery backup systems are required.

7.1.26 Field transmitters shall be two-wire, 4 to 20 milliamp dc range, ±0.25 percent limits of error, complete with 50mm (2 inch) pipe stand mounting hardware. Low displacement, capacitance bridge transmitters for pressure and flow shall be furnished. Temperature transmitters shall be provided with 316 SS thermowells with lagging extensions and ISA Type E spring loaded and sheathed thermocouples. Temperature transmitters shall be remotely mounted from the thermowell. The power requirements for the transmitters shall be provided from the logic cabinet.

7.1.27 The plant operator's interface to the control system shall be by use of the manual/automatic selector stations. The M/A stations shall display process variables in engineering units. Percentage displays are not acceptable. The Contractor shall furnish flame retardant prefabricated cables which meet or exceed flame test requirements of IEEE standards with factory assembled connectors to connect the M/A stations to the logic cabinet. The cables shall be explicitly and permanently marked to avoid misconnection.

7.1.28 The system design shall not require a prior knowledge of programming skills by the Owner's plant personnel. All parameters shall be configurable with a CRT and keyboard furnished as part of the system and provided with a desk for mounting. Configuration and tuning of the system shall be possible only by authorized persons with appropriate keys or address codes furnished by the Contractor.

7.1.29 A means shall be provided to control all process variables in a manual mode in the event of a failure of the loop controller. It is desirable that each M/A station be provided with a signal generator capable of directly positioning the final control element. If the Contractor's system architecture does not have this feature, an explanation must be provided in the proposal of how the manual mode does function with the loop controller out of service.

7.1.30 The instrumentation and control system is intended to have all connections to field devices made by dedicated wiring from the field to the logic cabinets. The data from the field devices is then available via a data highway to the CRT display units. A minimum of three CRT's shall be provided for installation in the main control room. One CRT shall normally be dedicated to alarm functions and one CRT for operator graphic displays with the third CRT available for special trending or logging functions. The CRT's are used in a supervisory and monitoring mode but not process control. One CRT shall be provided with a keyboard for engineering, maintenance, and operator requirements.

7.2 BOILER CONTROL SYSTEM

7.2.1 All necessary control and instrumentation required for the safe and efficient operation of the steam generator is to be furnished. The main boiler functions are summarized as follows:

a. Draft

490

b. Combustion

c. Fuel auxiliaries

d. Feedwater

e. Main boiler sections

f. Superheater and reheater

g. Main steam pipelines

h. Reheater pipelines

i. Auxiliary boiler groups.

7.2.2 Draft

a. The equipment for each unit to be controlled shall consist of:

Two air pre-heaters
Two rotary air heaters
Two FD fans
Two ID fans
All associated auxiliaries

b. The modulating control functions shall include:

Combustion air temperature
Air heater cold-end temperature
Combustion air supply
Furnace pressure

c. The sequence and protective functions shall include start and stop sequences, and active and passive interlocks for all equipment.

d. The control system shall receive inputs from sensors provided with the fan units to monitor the following typical parameters:

All bearings vibration monitoring
All bearings temperatures
Status of lubricating oil
Status of coolant
Status of drive motors
Status of hydraulic fluid

7.2.3 Combustion

a. The equipment to be controlled shall include the following:

Ignition fuel regulating valves
Combustion air control dampers
Pulverizers
Feeders

b. The combustion control system shall adjust the fuel and combustion air inputs to the boiler in accordance with steam demand as inferred from steam flow and pressure measured in the steam mains to the turbine. As long as an error exists, the unit master combustion controller shall continue to integrate the fuel and air requirements until the steam load is satisfied. The system shall be suitable to maintain low excess air firing within the limits specified by the boiler supplier.

c. A single master combustion control station shall be provided whose set point shall be regulated by the coordinated control system under automatic control (master fuel demand) or directly by the operator under manual control.

d. A minimum air flow limit shall be imposed.

e. The control system shall maintain a constant air to fuel ratio throughout the load ranges and under all transient conditions.

f. The system shall include flue gas oxygen trimming to the air signal to optimize combustion conditions and shall also include fuel and air cross limits.

g. Auto/manual stations shall be provided for the independent control of each mill/feeder and air flow shall be provided.

h. Air flow measurement shall be by venturi section located in the air ducting to the boiler. The location of the primary air flow measuring devices shall be such as to ensure that the air flow thus measured represents an accurate value of effective air flow to the combustion chamber and is not subject to air leakage losses within the duct and air heater circuits or to pressure fluctuations due to wind effects.

i. Air flow regulation shall be by individual windbox control, FD fan radial inlet vane control, or combinations of these methods.

j. Coal flow shall be measured by an inferred means.

k. Measurement duplication for combustion air flow shall be provided.

7.2.4 Feed Water

a. The equipment to be controlled shall include the boiler feed water pumps and the feed water regulation valves, i.e.:

3	Electric driven feedpumps (50 percent capacity each)
1	Normal load feedwater regulating valves (25-105 percent)
1	Low load feedwater regulating valves (0-30 percent)
	Monitoring and supervisory equipment

b. The feed pumps shall be driven by constant speed electric motors.

c. Each pump shall be supplied with an individual recirculation system which shall come into operation at low flows and will recirculate water back to the deaerator after suitable pressure reduction. Also, the feed pumps shall be equipped with a flow measuring orifice arrangement.

d. Each feed pump shall be capable of satisfactory operation at all conditions arising, from minimum recirculation flow through to maximum flow, operating either in parallel with another pump or individually.

e. The control system shall receive inputs from sensors provided with the feedpumps to monitor the following typical parameters:

Bearing temperatures
Status of Lubricating oil
Status of coolant
Status of lubricating oil pumps
Winding temperatures
Vibration monitoring
Axial shaft movement monitoring
Gland seal water flow

f. The modulating control functions shall include:

1. Normal Load Range Feed Control

This shall operate over the normal load control range of 20 percent to 100 percent MCR but also provide a sufficient overlap with the 'Low Load' controller to allow smooth transfer from one of the other. The normal three element control arrangement based on drum level, steam and feed flow shall be provided.

2. Start-Up and Low Load Feed Control

This shall be provided for feed control during initial boiler start-up and low load operation with a nominal range of operation from 0 percent to 30 percent of MCR. It shall consist of a single element drum level control loop and act directly on the 'Low Load' feed control valve. The characteristic of the 'Low Load' feed control valve shall compliment those of the main feed control valves and, as such, its operating range of 0-30 percent is purely nominal.

3. Recirculation Control

The recirculation system shall be controlled by a signal derived from an orifice, nozzle or venturi in the pump discharge.

The recirculation valve shall be under modulating control below a predetermined flow rate.

g. The sequence and protective functions shall include the start-up, shut down and auto standby control function for each of the two pumps. In response to the sequence system, a pump selected to standby shall be started automatically on the emergency trip of a running pump or low drum water level.

h. Duplicated and appropriately compensated measurements of drum level, and feed flow shall be provided.

7.2.5 <u>Main Boiler Sections</u>

a. The equipment to be controlled shall consist of the main boiler sections such as the superheater and reheater.

b. The modulating control functions shall include superheater outlet temperature control and reheater outlet temperature control.

c. Superheater temperature shall be controlled by regulation of spray water flow to (at least) one stage of interstage spray attemperation. Each parallel path shall be individually controlled to temperature detected at the outlet of each secondary superheater section (i.e., not average superheater outlet temperature). The control system shall include feed forward signal of temperature as measured immediately after each attemperator. The system shall be capable of maintaining a stable and accurate control over the whole range in which the boiler is capable of producing steam at the required temperature.

d. The reheat steam temperature shall be controlled by tilting burners (primary control) and by regulation of spray water to attemperators located before the reheater (secondary control), or by backpass gas dampers and regulation of spraywater to attemporators. The secondary control system shall be generally as described for Superheater temperature control. The primary control index shall be measured at the reheater outlet while the feed forward signal of temperature shall be measured immediately after each attemperator.

7.3 BALANCE-OF-PLANT CONTROL SYSTEM

7.3.1 All necessary control and instrumentation required for the safe and efficient operation of the below listed balance-of-plant systems it to be furnished:

a. Condensate system

b. Feedwater heaters

c. Instrument air system

d. Service air system

e. Auxiliary steam supply

f. Miscellaneous drains recovery system

g. Closed circuit cooling water system

7.3.2 The condensate system requires controls for all regulatory, sequence control and monitoring functions associated with the following equipment: condensate pumps, condensate recirculation control and condensate make-up balance control.

a. The condensate pumps consist of three 50 percent pumps and the associated suction and discharge isolating valves. The control functions shall include the remote start, stop, auto standby sequence and suction level control.

b. The condensate level control shall consist of a low level make-up control loop and a high level rejection control loop.

c. The condensate system make-up equipment consists of all the plant items necessary to maintain condensate make-up to the feedwater system via the condenser. These shall include reserve feedwater storage tank, feedwater make-up pumps, bypass valve.

   It shall be noted that the two feedwater make-up pumps utilize one as standby. The pumps shall be operated from the auxiliary control panel.

d. The major sequence and protective functions shall include:

   1. Manual start-up and shut-down functions for the make-up pumps and condensate pumps.

   2. Interlocks to prevent pumps starting against closed valves or low pressure on the suction side.

   3. Auto tripping of make-up pump if high level in condenser occurs.

e. The main condenser equipment to be controlled consists of the following:

   1. Condenser cooling water inlet and discharge valve control and supervision.

   2. Surge suppression control.

   3. Temperature monitoring.

7.3.3 The feedwater heaters require all controls for the regulatory, sequence control and monitoring functions associated with the high pressure and low pressure feed water heating trains.

a. The modulating functions for the deaerator shall include:

   1. Level control.

2. Pressure control.

Control of deaerator level is based on three element control, i.e., deaerator level, condensate and feedwater flow. Steam to the deaerator shall be derived from three sources, i.e., turbine extraction steam, cold reheat steam and auxiliary steam. In the upper region of the load range, the deaerator pressure shall slide with load, i.e., turbine extraction steam pressure. When the load decreases below a predetermined level, the cold reheat steam shall be automatically connected and controlled to support the deaerator at a set pressure. When the pressure from the two steam sources above are inadequate to maintain the deaerator, the auxiliary steam shall be automatically connected and controlled to support the deaerator. Because of the high temperatures that can exist in the cold reheat steam, the temperature shall be reduced by attemperation and maintained at the required temperature by automatic regulation of the spray water control valve.

b. The deaerator shall include, but not be limited to the following protective functions:

1. Tank over pressurization protection.

2. Over temperature protection.

3. High level protection.

4. If level in the storage tank is unsatisfactory then the boiler feedpumps cannot be started.

5. Abnormal build-up of water in the turbine extraction and cold steam lines, i.e., fitting of low level collection pots with level detection devices to initiate high water level protection system.

The level alarms and protection shall be capable of being independently tested on-line.

c. The controls associated with each feedwater heater (two high pressure and four low pressure) shall include:

1. Level control.

2. High level protection and supervision.

3. Extraction steam isolation.

.497

The high level alarms and protection shall be capable of being independently tested on-line.

7.3.4 The boiler/turbine generator unit will be provided with its own independent instrument air system. The equipment to be controlled for each unit consists of two motor driven compressors, two air receivers, two air dryer assemblies and a ring main pipe distribution system.

a. This equipment shall be operated from a local panel, located adjacent to the compressor installation. However, essential alarms and monitoring are required in the main control room for overall plant status assessment as follows:

1. Compressor discharge pressure.

2. Indication of compressor running/stopped.

3. Indication of standby compressor selected.

4. Alarm of standby compressor not selected.

5. Alarm of standby compressor start.

6. System low pressure alarm.

7. Operation of interconnecting valve.

8. Air dryer dew point.

9. Air dryer changeover fault.

7.3.5 The service air system to be controlled for each unit shall consist of two compressors, two air receivers and general services air ring main.

The system shall be operated locally with discharge pressures from the compressors extended to the auxiliary control panel together with a group alarm to indicate system fault.

7.3.6 The auxiliary steam system for each unit shall consist of the following:

Pressure reducing and desuperheater station conditioning steam from the cold reheat and feedheater No. 2 to the auxiliary steam main. Also controlled is the cold reheat connection control valve - all associated I&C equipment shall be controlled from the main control room.

a. The control requirements shall consist of the following:

1. Auxiliary steam main pressure to be maintained to set value by regulation of the pressure reducing station.

2. Auxiliary steam main temperature to be maintained to set value by regulation of the spray control valve.

3. Cold reheat supply shall be auto connected to system when pressure of the steam supply to the feed heater falls below set limit.

4. Availability of cold reheat supply shall be controlled from the main control room.

7.3.7 The miscellaneous drains recovery system shall consist of the following equipment:

Clean drains return pumps.

Clean drains recovery tanks.

The equipment shall be controlled and supervised from the Auxiliary Control Panel.

a. The sequence and protective functions shall include:

1. Start-up and shut-down of the clean drains return pumps.

2. Auto start-up of selected pump from high level in recovery tanks.

3. Auto stop of running pumps from low level in recovery tanks.

4. Auto start of standby pump on duty pump trip.

5. Facilities to permit one tank operation, i.e., one tank totally isolated.

7.3.8 The closed circuit cooling water system for each unit consists of two 100 percent CCCW pumps, two 100 percent heat exchangers, one head tank and auxiliaries. The CCCW make-up pumps shall also be included under this group.

One pump/heat exchanger unit is normally in service with a further pump/heat exchanger retained as standby.

The equipment shall be controlled and supervised from the auxiliary control panel in the main control room.

a. The control requirements consist of the following:

1. Start, stop and auto standby for the CCCW pumps.

2. Auto opening of drain valves on loss of electrical supply to CCCW pumps.

3. Start, stop and auto standby functions for the two CCCW make-up pumps.

4. Auto start and stop of CCCW make-up pumps to maintain levels in CCCW Head Tank, Emergency Generator Header Tank and Chilled Water Tanks.

7.4 MAIN CONTROL PANEL AND AUXILIARY CONTROL PANEL

7.4.1 The Vendor shall provide a main control panel and auxiliary control panel for remote control and supervision of all plant functions. A listing of equipment to be mounted on the panels is included as a guideline in Attachment 2, Control and Instrumentation Tables.

7.4.2 Structural requirements shall be taken from the Burner Management System (Section 7.07) specification included as Attachment 1.

7.4.3 The following general requirements shall apply:

a. Indicating instruments may be of the dial or edgewise scale type. Instrument dials and scales in general should be white with black markings. They are to be of such material that no peeling or discoloration will take place with age under the ambient conditions experienced.

b. Instrument casing bezels are to be of an approved material, finished in a specified color and of the minimum thickness necessary to give clear separation between dial or instrument front and cubicle. Bezels are to be attached to instrument cases by screws or clamps. Fixing by crimping is not acceptable.

c. All indicating instruments are to be fitted with non-reflecting glass, the distance between the dial and glass to give the best possible conditions for reading from a distance. Major scale markings should be separated by not more than four minor marks. The major classes and

numerals should be of the same thickness. Minor scale marks should be half the height and width of the major scale markings. Pointers for dials should taper evenly to the width of the minor scale marks which should be just met by the tip of the pointer. Pointers for edgewise scales should have a convex taper. Instruments shall have direct reading scales unless other arrangements are specifically authorized.

d. The maximum indication of the normal working range of fixed scale instruments indicating values which do not vary with unit output, e.g., of the full movement of the pointer. The maximum indication of the normal working range of fixed scale instruments indicating values which vary with unit output, e.g., feed flow, should make use of 90 percent of the full movement of the pointer. Wherever necessary, instruments are to be provided with a readily accessible zero adjustment. Where suppressed zero scales are supplied an equivalent adjustment is to be provided.

e. Unless otherwise specified strip chart recorders are to be provided and shall be arranged to move approximately 25mm (1") per hour and the previous 4 hours records displayed. One chart is to allow a minimum recording period of 30 days. Where two or more quantities are recorded on the same chart, they are to be distinguished by the use of distinctive colors or numerials.

f. Recording instruments are to be fitted with glass windows so that the pen contact point on the chart and the length of chart on which the record has already been made are clearly visible. Indicating scales shall be provided to enable the actual values to be read from the charts without removing them from the recorders.

g. Charts and inks or ribbons sufficient for 1 year's continuous working on each recorder shall be supplied under this Contract.

h. The accuracy of each type of instrument and measuring loop shall be to approval and the instruments shall be capable of maintaining the stated accuracies and give continuous satisfactory service over the ambient temperature and humidity ranges stated in the Contract Specification.

i. Repeatability shall be maintained to within ±0.5 percent without adjustment for a period of not less than 12 months.

.501

j. Auto/manual stations shall be provided with automatic tracking and bumpless transfer facilities.

7.5 FIELD MOUNTED EQUIPMENT

7.5.1 The Vendor shall provide all field mounted equipment to provide inputs to the control system with exceptions noted in Section 3.0. A listing of equipment is included as a guideline in Attachment 2, Control and Instrumentation Tables.

7.5.2 The following general requirements shall apply:

a. All transmitters shall be fitted with an indicator displaying appropriate physical units which may be read clearly by the plant attendant from an easily accessible position.

b. Transmitters shall be provided with all necessary isolating vent and blowdown valves, thermocouples, thermowells, and interconnecting pipework.

c. A pressure instrument measuring steady pressure shall normally operate at 75 percent of its maximum range. When used for measuring varying pressure it shall operate in a band centered on 60 percent of its maximum range.

d. Thermocouple and resistance elements shall be provided with weatherproof terminal heads.

e. The elements are to be of adequate length so that when installed the terminal head is clear of the thermowell and lagging. Excessive temperatures at the terminal head must be avoided.

f. Filled system and bi-metallic type dial thermometers shall be used as appropriate for local indications in the field. Unless otherwise specified, the respective dial sizes shall be 127mm (5") diameter.

g. Orifice plates and flow nozzles shall be manufactured of AISI 316 Stainless Steel unless specified otherwise.

h. Where detection of discrete levels are required, the simple float operated switch should be used, however each switch shall have snap action with limited hysterisis to prevent contact bounce caused by small fluctuations in level. Each switch shall be provided with a minimum of two sets of changeover contacts rated to suit system requirements.

7.5.3 Control valves shall be selected based on the following criteria:

a. The control valves shall be designed to conform to the data shown on the attached Control Valve Data Sheets (hereinafter referred to as Data Sheets to be supplied later).

b. All globe valves shall be equipped with, unless noted otherwise on the Data Sheet, cage guided valve plugs with push-down-to-close valve plug action.

c. Globe valve seat rings shall be separable from the cage. The seat ring shall be retained by the cage. Threaded-in seat rings are unacceptable.

d. Globe valve actuators shall be mounted in direct line with the valve stem. Side mounted, lever connected actuators are unacceptable.

e. Butterfly valve discs and shafts shall be joined by pinning.

f. Butterfly valve bearings shall be self-lubricated sleeve (wetted) or roller-bearing type (dry). Sleeve bearings shall be of a nonconducting material to minimize electrolysis-type pitting of the shaft.

g. All butterfly valves shall be provided with mechanical disc position indicators on the shaft.

h. Valve actuators shall be capable of tightly shutting off the unbalanced forces occurring at the maximum specified differential pressure. The design shall provide an additional minimum seating force of 9 Kg/Lineal cm (50 lb/lineal inch) of seat circumference to assure tight seating.

i. Spring and diaphragm type actuators shall be a yoke-mounted design capable of 360° mounting without restriction to operation. The actuator housing shall completely enclose the spring and diaphragm to exclude the entry of dirt or other foreign material.

j. Piston actuators may be supplied where any of the following conditions exist:

   1. The power required to operate the valve is beyond the limits of a spring and diaphragm actuator.

2. A valve travel time is required which is faster than that obtainable with a spring and diaphragm actuator.

k. All piston actuators shall be designed such that filter-lubricators are not required.

l. All piston actuators shall be sized for 345 kPa (50 psig) air pressure but shall be capable of operation over a pressure range of 345-862 kPa (50-125 psig).

m. All valve positioners shall be provided with two pressure gauges indicating "supply," and "diaphragm" and a filter pressure regulator for supplying air to the positioner. The normal plant air supply available is 552 kPa (80 psig) dry, filtered instrument quality with a -40°C (-40°F) dew point.

n. Positioners shall be capable of field characterization for non-linear functions.

o. Solenoid valves shall be three-way, universal type, high-temperature, Class H molded construction coils, waterproof, and fungus resistant design.

p. Solenoid valve ac coils shall be rated for 120 volt, 50 hertz, single phase. DC coils shall be rated for 125 volt and shall operate satisfactorily within a voltage range of 105 to 140 volts without performance degradation. All coils shall be rated continuous duty.

q. Solenoid valves shall be yoke-mounted on the control valve. Pipe or tubing mounting or attachment to the diaphragm housing are unacceptable methods.

r. Limit switches shall be valve stem actuated and be independently field adjustable.

s. Switches shall be the heavy duty type, rated for 125 volts dc, 0.5 amps, and have snap action. All switches shall have Form "C," single pole, double throw contacts. Switch enclosures shall be rated NEMA 4. Any rollers used as part of the switch actuator lever shall be steel. Teflon rollers are unacceptable.

t. The Vendor shall determine the type of packing used and the need for extension bonnets and cooling fins, taking into consideration the operating temperatures and the design of the valve. Asbestos packing is not acceptable.

u. All rising stem valves shall be provided with mechanical stem position travel indicators.

v. Valves shall be equipped with permanently attached stainless steel nameplates with engraved or stamped lettering that includes the Vendor's standard information and the Owner's valve tag number.

w. The Vendor's intended direction of fluid flow shall be permanently and clearly shown on the valve body.

x. All accessories such as I/P converters, positioners, solenoid valves, and air pressure regulators shall be mounted on the valve assembly insofar as practical. Interconnecting tubing for the accessories shall be furnished and installed. All tubing shall be seamless stainless steel or seamless copper with compression type fittings.

y. Transition pieces (or stub ends) shall be provided as noted on the Data Sheets. The stub ends shall be the same size as the valve body and shall be 150mm (6") long. They are generally specified when alloy bodies are utilized in steel piping systems. Welding shall be in accordance with provisions of ANSI B31.1, Power Piping.

7.6 MONITORING AND DATA ACQUISITION SYSTEM

7.6.1 A centralized monitoring and data acquisition system shall be provided for supervisory monitoring, alarms, event recording, etc., of the boiler/turbine generator unit and auxiliary systems contained within this Specification.

7.6.2 The monitoring and data acquisition system shall consist of a dual processor system with auto changeover facilities and fully redundant peripherals.

7.6.3 To conform to the integrated control system concept the plant monitoring and data acquisition system shall be regarded as an integral part of unit control systems to ensure close hardware and software compatibility. The input/output used by this system shall be obtained via data highway from the plant control system.

7.6.4 The monitoring and data acquisition system shall provide all the principal display functions which shall not however include any direct plant control functions. In the event of total failure the operation of the plant control systems shall be unaffected.

7.6.5 The purpose of the monitoring and data acquisition system is to acquire and process data and to present it to the operators in the main control room on the CRT console.

The duties of the system shall include, but not be limited to:

a. Collection of data from the control system cabinets;

b. Administration and processing of plant and other data;

c. Response to operator commands;

d. Display of current and historical data and system status on CRT's in graphical and alpha-numeric form;

e. Routine cyclic logging;

f. Logging on demand;

g. Chronological Event logging;

h. Alarm logging and display with alarm analysis and suppression facilities;

i. Provision of information for Pre and Post-fault analysis;

j. On-line expansion and modification of the plant image;

k. Updating and addition of programs within the system.

l. Trouble shooting and control system turning and configuration.

7.6.6 All peripherals shall be of proven reliability and shall be engineered and manufactured to a high standard. There shall be a minimum diversity of type of peripherals to reduce spare parts inventory.

7.6.7 Mass storage devices shall have adequate capacity to exceed the requirements of the fully loaded and expanded system by 25 percent.

A paging facility shall be provided for displays requiring more than one VDU screen of information and the pages shall be sequentially numbered.

Computer output shall show all necessary date and time information for the system concerned. Output shall show quantities in the specified engineering units.

Where appropriate and necessary the computer systems shall generate characteristic curves for non-linear variables.

Facilities shall be provided on the plant computers for plant image modifications to be carried out on-line without disruption of system operation.

7.6.8 Facilities to be provided shall include, but not be limited to the following:

a. Mimic Diagram Display with Live Values and Status Information

Mimic diagrams shall be configured for each functional group and functional sub-group. Mimic symbols and colors shall, as far as possible, be consistent with the control desk and panel process mimics. Plant analog values shall be displayed in engineering units immediately adjacent to the graphic representation of the equipment concerned. Means shall be provided to indicate by the color of the point display:

Value within normal operating range.

Value outside normal operating range and/or in alarm.

Null value due to instrumentation fault.

Manually entered override value into the plant data base.

Plant status information shall be indicated by color of the mimic symbol for the equipment concerned.

In addition mimic diagrams shall also be configured to show plant overview displays of the major process streams as follows:

1. Boiler

2. Main Turbo-Generator and Ancillary Plant

3. Auxiliary Systems

b. Sequence Control System Status Display and Log

The status of each functional group and functional sub-group shall be display and logged. The information to be displayed shall include, but not be limited to:

501

Status of each group and sub-group - auto or manual.

Status of each group, sub-group and item - on or off.

Group or sub-group sequences.

Step number.

Identification of satisfied and unsatisfied criteria.

Run time exceeded fault.

Auto trip of plant items.

c. Alarm Annunciation and Sequential Logging

The system shall be fully co-ordinated and consistent with the conventional alarm system. The computer shall monitor and display the date and time of the alarm initiation and also when the cause of the alarm has been cleared. Each alarm shall be sequentially logged on a dedicated printer in the Main Control Room.

d. Current Alarm Display

The alarms in effect at the time of the operator's request shall be displayed. The display shall show urgent and non-urgent alarms by different color.

The display shall distinguish between accepted and non-accepted alarms by means of steady and flashing display, respectively.

Alarms which have been reset shall be removed from the display, but shall be shown on the printed chronological log.

e. Trend Display

Analog variables indicated in the Control and Instrumentation Tables under the heading 'Computer' shall be updated and maintained by the computer system for a period of 2 months.

Each trend display should be capable of displaying not less than seven curves simultaneously, each curve being uniquely identified by color. A key shall be included indicating the service for which each curve apertains.

The trend displays shall show process parameters versus time. The process parameter shall be scaled in the appropriate engineering units. The time scale should be selectable to 30 minutes or 2 hours. The display should be capable of displaying any 30 minute or 2 hour period within the previous 2 months on demand. It shall also be possible to display continuously in roll-down format periods of variable length up to a maximum period of 2 months.

f. Operating Time Display and Log

For maintenance purposes a facility for monitoring a total of not less than 150 plant items throughout the station shall be provided. The cumulative running hours for each item of equipment shall be individually calculated.

g. Switching Cycle Display and Log

For maintenance purposes a facility for monitoring a total of not less than 150 switching events throughout the station shall be provided.

The computer shall totalize from a pre-settable start value the number of switching cycles for each of the items mounted. Facilities shall be provided to reset individual registers or a complete group to zero or other value.

h. Pre and Post Fault Analysis

Fault analysis groups shall be configured for the major plant systems, these shall include but not be limited to:

The main boiler/turbine unit.

Plant overview.

Two spare freely configurable groups.

Each group shall monitor not less than 25 analog points and 100 binary points. The fault record shall cover a total period of 15 minutes, 10 minutes before and 5 minutes after the trip occurs. Each fault analysis group record shall be initiated automatically by states logically derived from up to 10 pre-selected binary inputs.

Whenever an initiation occurs a summary of the trip log shall be printed automatically. This shall consist of the value of all monitored points within the group at

intervals of 30 seconds for a period of 10 minutes before and 5 minutes after the initiation. Some variation of sampling rates of selected parameters shall be possible.

i. Operational Guidance

The computer shall provide assistance to operators during start-up, normal running and shut down of each plant and electrical system. The computer shall display instructional and informational messages on the control room CRT's on demand. The guidance software system shall be manufacturer's standard packages but should include the following:

Instruction of the order of Functional Group, Sub-Group and Item starting and stopping sequences during plant start-up/shut-down.

j. Automatic and Manual Disabling of Faulty or Invalid Inputs and Outputs

The computer systems shall also have facilities for recognizing and automatically handling faulty or invalid inputs from the plant. Such inputs shall be recognized by:

The control system detecting a faulty transmitter or switch and flagging the computer system for each instrument.

Self checking of the analog to digital converting equipment. The inputs associated with the faulty converter shall be disabled.

Inputs determined as faulty by the computer software by rate-of-rise and signal validation.

Inputs identified as faulty by the operator.

Displays and logs containing the disabled point shall show an approved character.

Disabled points shall be logged and it shall be possible for the operator to display on request a list of disabled inputs and outputs.

50

k. Manual Entry of Override Values into the Plant Data Base

To facilitate commissioning it shall be possible for the computer operator to manually override analog and binary values in the plant data base. The facility shall only be available at the computer consoles and shall be protected against unauthorized use by a lock-and-key or password system.

Override entries resident in the data base shall be identified as such on all displays and logs containing those entries.

Logging and display of overridden values shall be available from the plant operators facilities.

l. Cyclic Logging

For the purpose of statistical and historical recording of data freely configurable groups shall be preformed to automatically log at pre-selected intervals of 30 minutes, 60 minutes and 24 hours as required analog, digital and binary information including integrated values.

m. Calculated and Derived Variables

The plant control system shall provide all calculated and derived variables via the data highway for display.

n. Bar Charts

A facility shall be provided for configuring bar charts displays of analog variables. Each display should contain not less than seven variables. The display shall have facilities for the selection of any or all of the following:

Indication of high and low alarm point.

Change of color when an alarm point is reached.

Numerical display of each parameter in engineering units.

Scaling of the bar charts.

Indication of direction of change of each parameter.

o. Daily Alarm Summary Display and Log

Alarms occurring or resetting within the 24 hours prior to the display request shall be displayed. Additionally a cyclic log with 24 hour period shall be configured for the daily alarm summary.

p. Analog Value Group Display and log

Groups of analog plant values shall be configured for convenient display and logging of analog values within the plant.

q. Binary Status Group Display and Log

Groups of binary status values shall be configured for convenient display and logging of plant status within the plant.

r. Sequence of Event Log

The log shall chronologically print all binary events as they occur in order to monitor the operating regime of the plant.

The plant operator(s) should be able to interrogate any part of the plant data.

7.6.9 Communications between plant operators and the monitoring and data acquisition system shall be based on the use of clear text English language messages and tag numbers, and shall in general conform to the identification systems used elsewhere in the plant and in the control system.

7.6.10 In addition to the audible alarm, each alarm displayed via the computer system shall be immediately brought to the operators attention in the display, for example, by means of an appropriate colored message on the top or bottom line of the display.

7.6.11 The maximum response time to alarms and other events shall not exceed 5 seconds from initiation to display under the worst case conditions of signal activity.

7.6.12 The maximum response time to operator requests shall not exceed 2 seconds.

7.6.13 The maximum update time of CRT displays and their information content shall not exceed 5 seconds.

7.7 WATER QUALITY ANALYSIS SYSTEM

7.7.1 Continuous and automatic sampling of the feedwater and steam shall be provided at the following locations:

Boiler blowdown	pH, conductivity before and after cation exchange and silica
Saturated steam	sodium and silica
Economizer inlet	hydrazine, pH

7.7.2 The analysis system shall be complete with all necessary sampling probes, valves, coolers, pressure reducers, conductivity cells, analyzers, signal converters and amplifiers. Sample coolers with stainless steel coils shall be provided for mounting near the sample point.

7.7.3 All analysis equipment including the centralized analysis panel shall be housed in the Laboratory area of the Main Control Building.

7.7.4 Facilities shall be provided to enable cooled samples to be obtained from the following locations:

a. Economizer inlet

b. Reheater inlet

c. Reheater outlet

d. Superheater outlet

e. Water wall headers (1 per header)

f. Steam drum - 3 points

g. Desuperheaters outlet interstage

Each point shall include all necessary extraction probes, isolating valves, piping and coolers, etc.

7.7.5 Continuous and automatic sampling and analysis of the condensate and feedwater shall be provided at the following locations:

Condensate pumps discharge common	Conductivity (before and after cation), pH, Sodium, O_2, silica

After LP heater No. 4	pH
Deaerator outlet	Conductivity (after cation) pH, Sodium, O_2

The analysis systems shall be complete with all necessary sampling probes, valves, coolers, pressure reducers, conductivity cells, analyzers, signal converters and amplifiers and be generally in accordance with the systems specified under paragraph 7.7.1.

7.7.6 Facilities shall be provided to enable cooled samples to be obtained from the following locations:

a. Condenser hotwell

b. Feedpump discharge common

c. Condensate pump common discharge

d. Condenser circulating water discharge

Each point shall include all necessary extraction probes, isolating valves, piping, coolers and drainage facilities.

7.7.7 Continuous and automatic sampling to determine steam purity (sodium and conductivity) shall be provided for the Auxiliary Boiler.

a. Boiler blowdown

b. Economizer inlet

c. Superheater outlet

d. Water wall header

e. Steam drum

f. Deaerator outlet

g. Feedpump discharge

7.8 TRAINING SIMULATOR

7.8.1 A training simulator shall be provided to instruct power station technicians, operatives and trainees in general operating procedures such as normal running, unit start up and unit shut down abnormal operation of the plant and emergency procedures. One training simulator shall be provided.

7.8.2 The training simulator will not be designed for use in power generation research or assessing the effect of engineering modifications. However, it shall be possible to see the effect of changing controller characteristics and settings to arrive at optimum values during commissioning.

7.8.3 The simulator shall be designed to duplicate the power generating unit main control panel as much as is reasonably practical, for training purposes only.

7.8.4 The simulator shall consist of the following equipment:

Mock Main Control Panel
Instructor's Facility
Digital Computer

a. The mock main control panel of the simulator shall be designed to mimic, in external appearance and operation only, the real unit main control panel. It shall be of the same dimensions and color and be fitted with controls and instrumentation with external appearances identical to the real item. The simulator mock main control panel shall also be fitted with an audible alarm system similar to that fitted on the real item. It is desirable, wherever economic considerations permit, to use common components on both mock panels and the equivalent real items.

b. The instructors facility will be positioned near the simulator mock main control panel but separate from it by a partition. The instructor's facility shall enable the instructor to supervise the training session, monitor the performance of the trainees, and effect control over certain predetermined engineering system model parameters in the simulator.

The instructor's facility shall also be provided with a hard copy device in order to log sequentially any operation of the simulator controls by either the trainees or the training instructor. The facility shall also be fitted with one or more CRT's to enable the instructor to monitor simulated plant performance, to intervene, to stop or to manipulate the simulator in order to demonstrate training and operational concepts or to introduce malfunctions. These operations are described in more detail under the software subsection.

c. The simulator shall be driven by one digital computer of a type and size sufficient to meet all simulator tasks

required. The machine will undergo the minimum amount of hardware conversion, such as the installation of analog-digital convertors and analog input and output ports.

The engineering simulation model shall run within the machine's normal manufacturer supplied operating system. The machine and its associated peripherals shall be housed in a separate room to the rest of the simulator, and the room will be air conditioned.

7.8.5 A plant unit, consisting of one boiler and turbo-generator and its associated equipment shall be modelled. The model shall be of sufficient accuracy only to drive the mock instrumentation and to enable the simulator to run in real time with adequate accuracy to maintain training realism to a fully trained and experienced plant operator. The engineering model should be capable of responding to normal operational procedures such as cold start, warm start, boiler shut down and turbine off load tripping. The engineering model shall also adequately represent the behavior of the plant under a comprehensive range of fault conditions which shall include emergency tripping, load run-back, partial and full load rejection etc. The simulation model shall also be capable of running at varying rates down to one length the rate of real time and faster than real time, preferably 10 times the rate of real time.

7.8.6 The engineering model shall consist of individual sub-models of discrete plant components, systems and piping. The engineering software will also be tasked with emulating the catalog and mimics available on the operating console CRT, including all the functions of the plant data acquisition system, typical example of which are pre-trip and post trip data logging.

7.8.7 It is preferred that engineering model be written in FORTRAN 77. The source code of the engineering mode shall be liberally commented in English. The model shall be supported by both engineering and software documentation. Engineering documentation shall consist of engineering data used, its source, calculations and derivation of the model.

7.8.8 All common plant data that is likely to be required by various subdivisions of the model shall be held in a single engineering database. The engineering database shall be accessible from all areas of the software model and the instructors facility, for display purposes only. The engineering database shall be capable of being established and altered only by a program referred to as "database manager."

7.8.9 The simulator will be capable of storing 40 sets of data that define conditions of the system. These sets of data shall be arranged in such a way that they may be called for, recorded from the simulation or stored by identity numbers. The instructor will be capable of amending, creating or deleting data sets and snapshots from the instructors facility.

7.8.10 Software events that occur on the instructors facility shall also be recorded on the hard copy device. Snapshots and data sets may also be hard copied.

7.8.11 A comprehensive factor test shall be conducted on the fully assembled system based on design plant response data which shall demonstrate all design, operational and training features incorporated into the training simulator.

8.0 PERFORMANCE REQUIREMENTS

The Vendor shall state in his proposal the guarantee for control system performance for the purpose defined herein.

9.0 MATERIAL REQUIREMENTS

Specific materials required for control valve body and trim selection shall be as shown on the relevant Data Sheets (later).

10.0 FABRICATION AND ASSEMBLY REQUIREMENTS

The Vendor's standard procedures shall be submitted for approval.

11.0 INSTALLATION REQUIREMENTS

None

12.0 PERSONNEL REQUIREMENTS

The Vendor shall be responsible to provide competent field personnel, acceptable to the Owner, to properly commission the equipment.

13.0 INSPECTIONS AND TESTS

An integrated factory test shall be conducted by the Vendor to demonstrate that all system components are properly connected and that all functions perform properly. The logic cabinet, all associated prefabricated cabling, the M/A stations and monitoring and data acquisition system shall be tested prior

to shipment and witnessed by the Owner. The test shall be an open loop type with switch panels, signal generators, and lights to demonstrate the correct operation of all inputs and outputs for both manual and automatic modes including alarming and indicator lights. The Vendor shall submit his test procedures, 4 weeks prior to conducting the test, for approval.

14.0 CLEANING, CORROSION PROTECTION, AND COATING

14.1 Metal parts shall be clean and free of rust and mill scale prior to painting and shipment. A schedule of the Contractor's preservation procedures shall be submitted to the Owner for approval.

14.2 Nonmachined surfaces shall be given one coat of the Contractor's standard primer. Minimum dry-film thickness shall be .05mm (2 mils), unless otherwise specified.

14.3 Machined surfaces, including shafts, bearings, and couplings, shall be adequately protected against corrosion and damage during shipment and outdoor storage for a period of 1 year. Openings shall be suitably capped with metal covers where possible.

14.4 Weld end preparations shall be coated with Deoxaluminate or approved equal and shall be covered with metal end caps prior to shipment.

15.0 MARKING AND IDENTIFICATION

15.1 To facilitate unloading and erection, the weight of each major component shall be marked in a conspicuous location with painted numerals at least 75mm (3") high.

15.2 Equipment supplied shall bear permanently attached descriptive tag numbers as specified by the Engineer.

16.0 PACKAGING, SHIPPING, AND STORAGE

The Vendor's standard procedures for overseas shipment of materials shall be submitted for approval.

17.0 ACCEPTANCE CRITERIA

17.1 MANUFACTURING ERRORS

Equipment and materials shall be complete in all respects within the limits herein specified. Manufacturing errors and omissions, required to be corrected in the field, shall be

performed under the direction of and at the expense of the Contractor. If the error requires shipment back to the factory, the disassembly, handling, shipping, and reassembly shall be at the Contractor's expense.

17.2 ACCEPTANCE TESTING

The control system will be considered "accepted" when all system functions perform under field conditions as specified in accordance with approved Contractor logic diagrams. Acceptance will be determined by the Owner.

ATTACHMENT 1

BURNER MANAGEMENT SYSTEM
(BY OTHERS, INCLUDED HERE FOR INFORMATION)

7.07 DESIGN REQUIREMENTS

7.07.1 The intent of the design requirements specified herein is to establish minimum design criteria for the system and assure that the equipment to which the system is applied can be operated in compliance with related codes and standards, and the boiler manufacturer's operating requirements.

7.07.2 Functional Requirements

The logic system shall be a microprocessor based electronic system designed to perform the following functions:

1. Burner control, including secondary air dampers, mill outlet gates and low-load burner shutoff valves.

2. Ignition control, including insertion actuator, ignition transformer and fuel shutoff valves.

3. Furnace purge.

4. Ignition fuel trip.

5. Master fuel trip.

6. Pulverizer control, including primary air fans, feeders, seal air fans and pulverizers.

7. Miscellaneous controls.

7.07.3 Logic Requirements

1. Burner and Ignition Control Logic

   a. The burner control logic shall provide:

      (1) A uniform start sequence for an orderly lightoff of any of the burner groups.

      (2) A uniform stop sequence for an orderly shutdown of any of the burner groups.

      (3) Emergency stop sequence for each burner group.

b. The start and stop sequences shall control the operation of ignitors, secondary air dampers, coal gates, and fuel shutoff valves.

c. The burner control logic shall be designed for the following modes of operation:

(1) Remote Manual:

In this mode, each step involved in the start sequence and stop sequence for the minimum permissible number of burners in any of the burner groups will be executed by the operator. The control logic shall include all necessary permissives and interlocks to:

(a) Prevent starting any burner equipment unless all required permissives have been satisfied.

(b) Prove completion of each step as a permissive for executing the subsequent step.

(c) Automatically shutdown the minimum equipment to restore safe conditions whenever an unsafe operating condition occurs.

(2) Automatic:

(a) In this mode, the start sequence and stop sequence for each burner group will be initiated by the operator. Once initiated, each step involved in the sequence will be executed automatically.

(b) The control logic shall be designed so that all permissives and interlocks that are integral to the remote manual mode shall also be integral to the automatic mode.

(c) Provisions shall be made for the operator to maintain the ignitors after the successful lightoff of the associated burner and also to disable any burner within a burner group prior to lightoff.

(3) Ignitor Operation:

(a) The system shall provide for remote startup /shutdown sequences of the ignitors as a part of the burner control logic.

(b) The system shall automatically shutdown any ignitor if any unsafe operating condition occurs.

2. Furnace Purge Logic

a. The purge logic shall be operator initiated and designed to perform the following functions:

(1) Monitor all purge permissives.

(2) Start purge cycle when all purge permissives are satisfied.

(3) Indicate purge status.

(4) Supervise purge cycle.

(5) Permit master fuel trip reset upon completion of purge cycle.

(6) End the purge and require a purge restart upon loss of any one or more purge permissives before lightoff.

b. Purge permissives shall include the following:

(1) One FD and ID fan pair running.

(2) Air flow greater than 25 percent.

(3) All fuel inputs off.

3. Ignition Fuel Trip Logic

The ignition fuel trip logic shall be designed to trip the ignition fuel trip valve in the event of the following:

a. Ignitor oil pressure low.

b. Ignitor oil valve malfunction.

c. Ignitor fuel trip pushbutton.

d. Boiler trip.

4. Master Fuel Trip Logic

a. The master fuel trip (MFT) logic shall be designed to perform the following functions:

(1) Monitor a set of predetermined conditions that initiate the master fuel trip.

(2) Execute all necessary actions required immediately after a master fuel trip.

(3) Permit MFT reset after all permissives have been satisfied.

b. The MFT shall be set to trip whenever any one of the following conditions occur:

(1) Loss of flame.

(2) Loss of all FD fans.

(3) Loss of all ID fans.

(4) High-high furnace pressure.

(5) Low-low furnace pressure.

(6) Low-low boiler drum level.

(7) Emergency pushbutton is pushed.

(8) Main turbine trip.

(9) All fuel inputs zero.

(10) Partial loss of flame.

(11) Total loss of power to combustion control or burner controls.

c. The following actions shall take place when an MFT occurs:

(1) All sources of fuel to the furnace including oil trip valve(s) and pulverizer outlet gates shall be closed.

(2) Pulverizers, feeders and primary air fans shall be tripped.

(3) Airflow actions will be included in the boiler control by Others.

d. Master fuel trip reset shall be initiated automatically after all trip conditions have been removed and the purge cycle has been completed.

e. Provisions shall be made for supplying necessary contact outputs for the Owner's use for monitoring sequence of events.

5. Pulverizer Control Logic

Pulverizer, primary air fan, seal air fan, coal feeder, gates and dampers.

6. Miscellaneous Control Logic

Flame detector cooling blowers.

7.07.4 Operator Interface

1. Control board inserts shall be provided for operator interface. An insert shall be provided for each pulverizer/burner group and one for the boiler purge/master fuel trip.

2. Pulverizer/burner group control shall include:

a. Back-lit pushbuttons for each burner group for selecting remote manual and automatic modes.

b. Back-lit pushbuttons for each burner group for initiating start and stop sequences in automatic mode.

c. Back-lit pushbuttons for each functional item of equipment in each burner group for operation in remote manual mode.

d. Flame intensity meters for each flame detector associated with the burner group.

e. Mill emergency-trip pushbutton which shall trip all fuel associated with the mill.

f. Back-lit pushbuttons for start/stop control of the pulverizer, feeder, primary air fan, coal gates and primary air dampers.

g. Status indicating lights for each item of equipment in each burner group for start-up, shutdown and emergency trip sequences.

h. Coal flow indicator.

i. Hand/automatic control stations to be provided by the Owner for primary air control damper, feeder speed, mill temperature control dampers and mill auxiliary bypass dampers.

3. Furnace purge/master fuel trip (MFT) shall include:

a. An indicating light for each of the purge permissives.

b. An indicating light for each of the following conditions:

(1) Purge required.

(2) Purge ready.

(3) Purge in progress.

(4) Purge completed.

c. A back-lit pushbutton for initiating purge cycle.

d. Two back-lit pushbuttons with guards for emergency (MFT) trip.

e. Back-lit pushbuttons for manual operation of each ignition fuel header trip valve.

f. Status indicating lights for each ignition fuel header trip valve.

7.07.5 Equipment Design Requirements

1. Equipment Environment

a. The control room and electronic room will be air-conditioned to maintain approximatley 25.6°C (78°F). Positive control of relative humidity at 50 percent will be provided; however, in the event of air-conditioning

GRS

failure and during plant starting, the Vendor's equipment mounted in these rooms shall continue to operate satisfactorily without loss of function for up to 2 hours at 37.8°C (100°F) and a relative humidity of 85 percent.

b. All field-mounted equipment shall be capable of operating in a dust laden atmosphere and ambient temperature extremes from -28.9°C to 49°C (-20 to 120°F) and relative humidity from 5 to 85 percent.

2. Cabinet-Mounted Function Modules

Cabinet-mounted function modules shall include all electronic modules necessary to perform the computing, logic and control functions as specified and shall be subject to the following requirements:

a. All computing, logic and controller circuits shall be a microprocessor based printed-circuit design using components with fast response and high noise immunity, and shall be suitable for plug-in mounting in the racks of the system cabinets.

b. Each burner group shall be controlled through independent cards and modules whereby the removal or failure of one card or module will not affect any other burner group.

c. A signal conditioning system shall be supplied to isolate all input and output signals from the system through the use of solid-state devices or buffer relays. Any relay, when used in both ac and dc circuits, shall have the wiring arranged to insure complete separation of ac and dc circuits, thus avoiding any flashover between circuits.

d. All electrical connections to the modules shall be made through plug-in connectors located at the rear of the modules.

e. Contact output rating requirements:

10 amp @ 120V ac.

3. Power Supply

a. The Vendor shall develop and distribute all power required by the system from two independent 120V ac

power feeds furnished by the Owner at system cabinet assembly terminals.

b. The Vendor shall furnish a circuit breaker or fuse for the Owner's power feed. The circuit breaker or fuse shall be located for convenient access and clearly labeled to identify service and rating.

c. Parallel, redundant, solid-state power supplies shall be furnished for each voltage level required, with provision for automatic transfer to the active power supply of a pair in the event of a failure of one supply. Each power supply shall be furnished with a low-voltage detector that activates an indicating lamp located at the power supply and closes a contact for the Owner's alarm system when the power supply fails.

d. All power supplies shall be designed to operate at not greater than 50 percent of rated power output.

e. All power supplies shall be arranged so that manual adjustments are not required. Any power supplies that require periodic adjustment of output voltage shall be furnished with a voltage error alarm contact and a voltmeter having an accuracy commensurate with adjacent requirements. Other power supplies shall be furnished with exterior test jacks located for convenient access.

f. All field contacts shall be interrogated at 125V dc (by Vendor's power supply).

4. System Cabinet and Termination:

a. All power supplies, logic modules, flame-detector receivers and flame-signal magnitude-test indicators shall be rack-mounted in a single assembly of cainet enclosures.

b. A separate cabinet enclosure shall be furnished for all terminations between field-mounted equipment, board-mounted equipment and the system cabinet assembly.

c. All cabinets shall be freestanding with a maximum height of 2,300mm (90 inches) and a maximum depth of 760mm (30 inches).

d. System cabinets shall be of all-welded construction fabricated from flat, unpitted, high-grade sheet steel. Joints shall be welded continuously and ground smooth so that joints are not visible or open after the final paint finish is applied. The cabinets shall be reinforced with suitable angles and braces where required for strength without affecting access or operation of cabinet-mounted equipment.

e. Each cabinet shall have both front and rear access using gasketed doors and butt-type, liftoff-type, steel hinges. Locking handles and a latching mechanism shall be provided for each door. The latching mechanisms shall use a three-point door-latching system to secure the door at the lock and at the top and bottom. Termination-cabinet locks shall require a different key than that used for other cabinets. Equipment shall not be mounted on the doors and door opening shall not interfere with access to adjacent cabinets.

f. All control panels and cubicles shall be self-supporting and anchored at floor elevations.

g. A means shall be provided for bolting adjacent cabinets together at shipping splits. Wiring connecting cabinets at shipping splits shall be made by plug-in cable.

h. Filters and plenum chambers, if required, shall be provided at the top and bottom of each cabinet to allow air distribution for cooling purposes and shall be readily accessible for maintenance. Heat-generating equipment shall be mounted near the top of the cabinets or in separate cabinets. Cooling fans shall be furnished, if necessary, to dissipate expected heat. Any forced air flow shall be from cabinet bottom to top.

i. Cabinets shall be composed of mounting racks for mounting of all modules and all required power supplies. Each piece of equipment shall be mounted in the racks in such a manner that its removal and replacement can be accomplished without disturbing adjacent equipment. Ample space shall be provided for access and servicing of all equipment.

j. All cabinets shall be equipped with removable lifting eyes and shall have an integral lifting frame so

that the cabinets can withstand all lifting forces without cabinet distortion.

k. Separate system termination cabinets shall be provided to receive field wiring and shall be capable of being shipped prior to the logic cabinets for field wiring. The following shall also apply to these cabinets.

(1) Sufficient access channels or holes at the cabinet top and bottom shall be provided for all incoming field cable and conduit required by the system. No field wiring shall be allowed in the system logic cabinets except Vendor-supplied prefabricated cable.

(2) The termination cabinets shall be adjacent to and field fastened to the respective system cabinet assemblies.

(3) Terminal blocks for field cables shall be 600V with screw type terminals and shall be capable of accepting two Owner-supplied conductors of the size specified herein or as required by current carrying requirements, whichever is greater. The Vendor's and the Owner's connections shall be by compression type lugs. Terminal blocks shall also conform to the following:

(a) Terminal blocks shall be arranged so that all the Owner's field wiring is terminated on one side of the block and all the Vendor's wiring is on the other side. Also, the Vendor's and Owner's field wiring shall not occupy the same space between adjacent parallel rows of terminal blocks.

(b) Ample space shall be provided for spreading and bending the Owner's incoming cable.

(c) Design shall be such that no more than two lugs may be terminated under any one terminal screw.

5. System Wiring and Cabling

a. Cabinet wiring shall be installed in a neat, workmanlike manner so as not to obstruct access to devices and shall be suitably supported to avoid straining.

b. All cable including prefabricated interconnecting cable shall be rated 90°C (194°F) and shall be tinned-copper wire with low-moisture-absorption, ethylene-propylene insulation with a hypalon jacket for all multiconductor cables. Polyvinylchloride (PVC) and polyethylene shall not be used. Conductors for voltage in excess of 50 volts shall have insulation rated for 600 volts. Conductors for voltages less than 50 volts shall have insulation rated for 300 volts.

c. The color coding of control and instrument wiring shall comply with NEMA WC 30.

d. Conductor bundling or conduit shall be employed for the different types of signal wiring separations. The separations are required if noise introduction from one circuit into another is possible.

e. Materials used for wire troughs, conduit, wire and cable ties and terminal boards shall be of material that is nonburning as defined by ASTM E84 and by ASTM D635. Polyvinyl chloride (PVC) and polyethylene shall not be used, nor shall any material which will melt and its droplets carry the flame.

f. Prefabricated cables from the control board inserts shall be for bottom cabinet entry. Wiring termination to the control board insert shall be by cable connectors.

g. Owner furnished wiring for system input and output will be multiconductor 14-gage (AWG) stranded copper with 600 volt insulation. Terminal cabinets shall be arranged to satisfy the following cable entry requirements:

(1) Bottom entry for wiring to ignitor, air register and flame detectors. The estimated length is 122 meters (400 feet).

(2) Bottom entry for wiring to coal mill equipment and burner coal valves.

6. Control Board Inserts

a. Control board inserts shall be provided for operator interface as specified.

b. Each status indicating window shall be illuminated with a single lamp. There shall be no spillover of light from one window to another. Windows shall be of white, red and green translucent acrylic plastic, with black engraved legends. All lamps shall be accessible and removable through the window side. Window color code shall be:

(1) Red indicates open or energized.

(2) Green indicates closed or deenergized.

(3) Amber indicates permissive satisfied.

c. Status indicating lamp power shall originate in system cabinet assembly from a power suppply that is separate from all other system power supplies. A lamp-test pushbutton shall be furnished for each of two displays to illuminate all lamps in a selected display.

d. Indicating lamps shall be of sufficient brightness so that an operator may easily distinguish lampstate from a distance of 3 meters (10 feet) with an ambient illumination level of 100 foot-candles. Lamps shall have a minimum life of 25,000 hours.

e. All pushbuttons shall have contacts suitable for the low-current service of the solid-state, electronic logic interface circuits.

f. Provisions shall be made for installation of hand/automatic control stations to be provided by the Owner as specified.

g. Flame Detectors

(1) The Vendor shall supply one flame detector for coal burners and 1 flame detector for oil ignitors.

(2) Flame detectors shall have a high degree of discrimination for the flame envelopes to which they are applied.

(3) Flame detectors shall be automatically self-checking for the absence of flame condition. Electronic checking rather than electro-mechanical shutter technique is preferred.

(4) Flame detectors shall have a response time adjustment to avoid false response on normal flame intensity variations.

(5) The flame detector cooling system shall be suitable for maintaining the performance of each detector under all operating conditions.

(6) All flame intensity indicators shall be mounted in the control board insert.

(7) Flame detectors shall be designed to fail safe.

(8) Flame detectors shall have provision for keeping the optical components clean with compressed air.

(9) All power for flame detectors shall originate at the main cabinet assembly.

(10) All flame detectors shall be suitable for operating in ambient temperatures for -30°C to +50°C (-22°F to +122°F).

(11) All flame detectors shall be housed in NEMA 4 enclosures.

(12) All flame detectors shall be furnished complete with sighting tubes and mounting brackets as required.

(13) All flame detectors shall be furnished with an amphenol type MS, or equal, cable connector for interconnecting conductors.

ATTACHMENT 2

GUIDELINE REQUIREMENTS
CONTROL AND INSTRUMENTATION TABLES

EXPLANATORY NOTES TO TABLES

a. Refer to Paragraph 7.1.3.

b. Where there is more than one item of equipment, the instrumentation requirements schedules shall apply to each item.

c. Key to Service Symbols:

I	=	Indicator
R	=	Recorder
S	=	Integration
C	=	Control
A	=	Alarm
H	=	High
L	=	Low
T	=	Trip
SP	=	Sampling point
t	=	test
G	=	Group
D	=	Double measurement
TR	=	Triple measurement
n	=	Number to be stated by Vendor.

d. "LOCAL" indicates items mounted directly on or adjacent to the plant equipment.

e. "LOCAL PANEL" refers to instrumentation mounted on panels located adjacent to the plant equipment.

f. "COMPUTER" column refers to signals (analog or digital) for display on the main control room CRT's.

g. "MCR" column indicates functions displayed in the main control room other than those displayed on the CRT's, i.e., recorders and conventional indicators.

LIST OF ABBREVIATIONS

A/H	=	Air Heater
Aux	=	Auxiliary
Brg	=	Bearing
Blr	=	Boiler

LIST OF ABBREVIATIONS (Cont'd)

B.F.P.	=	Boiler Feed Pump
B/P	=	Bypass
CO_2	=	Carbon Dioxide
CiRc	=	Circulating
Comp	=	Compressor
Condst	=	Condensate
Condr	=	Condenser
Condty	=	Conductivity
Clr	=	Cooler
C.W.	=	Cooling Water
D/A	=	Deaerator
Demin	=	Demineralized
Des/Htr	=	Desuperheater
Diff	=	Differential
D.P.	=	Differential Pressure
Disch	=	Discharge
E.E.	=	Exciter End
Eccy	=	Eccentricity
Econ	=	Economizer
Emer	=	Emergency
Exh	=	Exhaust
F.P.	=	Feed Pump
F.W.	=	Feed Water
F.D.	=	Forced Draft
Gov	=	Governor
G.R.	=	Gas Recirculating
Hdr	=	Header
Htr	=	Heater
H.E.	=	Heat Exchanger
H.P.	=	High Pressure
H2	=	Hydrogen
I.D	=	Induced Draft
Ind	=	Indication
In	=	Inlet
I.P	=	Intermediate Pressure
Isol	=	Isolating (isolator)
Ign	=	Ignition
L.P.	=	Low Pressure
Lub	=	Lubricating

TABLE 1

BOILERS

Description		Local	Local Panel	Computer	MCR
Combustion Air					
Air flow (each side)	(D)			IA(L)	IRA(L)
Air flow total				IA(L)	IRCA(L)T
F.D. fans in temp		t		I	IR
F.D. fans out press		I		I	I
Preheater out temp		It		I	I
A/H out temp		It		I	IR
A/H out press		I		I	
Windbox press (each level)		It		IA(H/L)	IRCA(H/L)
A/H D.P.				I	
Windbox temp (each level)				I	
Windbox to furnace D.P.				IA(H/L)	I
F.D. fan disch. damper posn		I		I	IC
F.D. fan (motor control & status)				IA(T)	ICA(T)
F.D. fan speed (for variable speed)		I		I	IC
F.D. fan faults (each)				A	A(G)
F.D. fan amps				I	
F.D. fan brg temp (each		I		IA(H)	A(G)
F.D. fan motor brg temp (each)		I		IA(H)	A(G)
F.D. fan gearbox brg temp (each)		I		IA(H)	A(G)T
F.D. fan Lub-oil press		It		IA(L)	A(G)
F.D. fan Lub-oil tank level		I		IA(L)	A(G)
A/H in damper posn		I		I	IC
A/H out damper posn		I		I	IC
A/H B/P damper posn		I		I	IC
A/H recirc damper posn		I		I	IC
Burner register posn		I		I	IC
Flue Gas					
Furnace press	(TR)	It		IA(H/L)	IRCA(H/L)T
Furnace disch duct temp		It		I	IRC
A/H inlet temp		It		I	R
A/H inlet press				I	
A/H outlet temp	(TR)	It		I	IRCA(L)
A/H outlet press				I	
A/H DP				I	

TABLE 1 (Continued)

BOILERS

Description	Local	Local Panel	Computer	MCR
Flue Gas (Cont'd)				
I.D. fan inlet press			I	
I.D. fan outlet press			I	
I.D. fan outlet temp	t		I	
To Chimney press (common)	t		I	R
GR fan disch temp	It		IA(H)	ICA(H&T)
A/H inlet dampers	I		I	IC
A/H outlet dampers	I		I	IC
I.D. fan inlet dampers	I		I	IC
I.D. fan outlet dampers	I		I	IC
A/H bypass damper	I		I	IC
G.R. fan inlet damper	I		I	IC
G.R. fan outlet damper	I		I	IC
Burner gas dampers	I		I	IC
I.D. fan			IA(T)	ICA(T)
I.D. fan faults (each			A	A(G)
I.D. fan speed	I		I	IC
I.D. fan amps			I	
A/H			IA(T)	ICA(T)
A/H faults (each)			A	A(G)
A/H amps			I	
GR fan			IA(T)	ICA(T)
GR fan faults (each)			A	A(g)
Flue Gas Analysis				
Smoke density	t	I	IA(H)	A(H)
Oxygen before A/H	t	I	IA(H)	RCA(G)
Oxygen after A/H	t	I	IA(H)	RCA(G)
Carbon monoxide		I	IA(H)	RA(G)
Ignition Fuel				
Header press			IA(L)	
Trip valve	I		I	IC

TABLE 1 (Continued)

BOILERS

Description	Local	Local Panel	Computer	MCR
Feed Water				
Feed pump suct press	I		IA(L)T	IRA(L)T
Feed pump suct temp	It		I	
Feed pump disch press	I		I	IR
F.W. reg outlet common press	I		I	IR
F.W. reg outlet common temp	It		I	IR
Feedpump suction valves	I		I	IC
Feedpump disch valves	I		I	IC
Feedpump couplings			I	IC
F.W. reg (normal)			I	IC
F.W. reg (low duty)			I	IC
Main F.W. reg in isol.	I		I	IC
Main F.W. reg in isol. B/P	I		I	IC
Main F.W. reg out isol.	I		I	IC
Start F.W. reg in isol.	I		I	IC
Start F.W. reg out isol.	I		I	IC
Feed pumps			IA(T)	ICA(T)
Feed pumps speed	I		I	IC
Feed pumps faults (each)			A	A(G)
Strainers diff press	I		A(H)	A(G)
Feed water flow			IS	IRC
Vibration Monitoring (each point)			IA(H)	RA(G)
Feedpump brgs (motor) temp (each)	I		A(H)	A(G)
Feedpump brgs (pump) temp (each)	I		A(H)	A(G)
Gland seal water flow (n)	I		A	A(G)
Gland seal water control fault			A	A(G)
Gland seal water filters D.P.	I		A	A(G)
Spray Water				
F.P. interstage tap Isol for R/Htr spraywater	I		I	IC
R/Htr Spray isol	I		I	IC
R/Htr Spray press			I	

TABLE 1 (Continued)

BOILERS

Description		Local	Local Panel	Computer	MCR
Spray Water (Cont'd)					
R/Htr Spray temp				I	
R/Htr Spray flow				IS	IR
R/Htr Des/Htr Spray control VV		I		I	IC
R/Htr Des/Htr spray bypass VV		I		I	IC
S/Htr spray isol		I		I	IC
S/Htr spray press				I	
S/Htr spray temp				I	
S/Htr spray flow				IS	IR
S/Htr spray control VV		I		I	IC
S/Htr spray B/P VV		I		I	IC
Steam Drum					
Press	(D)			I	IRC
Level - Remote Reading					ICT
Level (conventional)	(TR)	I		IA(H/L)	IRCA(H/L)
Level trip					T
Blowdown Conductivity			I	IA(H)	RA(G)
Blowdown Conductivity			I	IA(H)	RA(G)
Blowdown pH			I	IA(H/L)	RA(G)
Blowdown SiO2			I	IA(H)	RA(G)
Blowdown flow				IS	I
Main Steam					
Primary S/htr outlet temp	(D)	I		IA(H/L)	IRA(G)
Secondary S/htr inlet temp	(TR)			I	IRC
Secondary S/htr outlet temp	(TR)	t		I	IRC
Final S/htr inlet temp	(TR)			I	IRC
Final S/htr outlet temp	(TR)	It		IA(H/L)	IRCA(G)
Final S/htr outlet press		I		IA(H/L)	IRCA(G)
Final S/htr outlet flow				IS	IRC
Final S/htr outlet header		SP			
Interstage header press		I		I	
Primary S/Htr inlet header Na			I	IA	RA(G)
Primary S/Htr inlet header SiO2			I	IA	RA(G)

TABLE 1 (Continued)

BOILERS

Description		Local	Local Panel	Computer	MCR
Reheat Steam					
Primary reheater inlet temp	(D)	t		I	IR
Primary reheater inlet press				I	IR
Primary reheater outlet temp	(D)	t		I	IR
Des/htr outlet temp	(TR)	t		I	IRC
Final reheater outlet temp	(TR)	t		IA(H/L)	IRCA(G)
Final reheater outlet press				IA(H/L)	IRCA(G)
Primary reheater inlet header		SP			
Primary reheater inlet header Na			I	IA	RA(G)
Primary reheater inlet header SiO2			I	IA	RA(G)
Interstage header press		I		I	
Boiler Metal					
Economizer temp				IA(H)	R
Evaporator temp				IA(H)	R
Drum temp				IA(H)	R
Superheater temp				IA(H)	R
Reheater temp				IA(H)	R
Sootblowers					
Sootblowers steam press				-	I
Sootblowers steam temp				-	I
Sootblowers				-	IC
Burner Management System (Refer to Attachment 1)					
Purge permissives (n)				I	I(G)
Pre-light permissives (n)				I	I(G)
Boiler trip (emergency)					C
Boiler trip conditions (n)				A(T)	A(G)
Fuel trip (emergency)					C
Fuel trip conditions (n)				A(T)	A(G)
Igniter trip (emergency)					C
Igniter trip conditions				A(T)	A(G)
Burner trip conditions				A(T)	A(s)

TABLE 1 (Continued)

BOILERS

Description	Local	Local Panel	Computer	MCR
Burner Management System (Cont'd)				
Purge			I	IC
Fuel selection			I	IC
Boiler trip reset			I	IC
Fuel trip reset			I	ICD
Burners			I	IC
Flame signal strength			I	

TABLE 2

TURBINE/GENERATORS AND ANCILLARY EQUIPMENT

Description		Local	Local Panel	Computer	MCR
Steam					
Isol. valve before HP stop valve				I	IC
HP stop valve inlet press	(TR)			IA(H)	IRCA(H)
HP stop valve inlet temp		t		IA(H/L)	IRA(H/L)
First stage press				I	R
First stage temp		t		I	R
HP cylinder exhaust press				IA(H/L)	RCA(H/L)
HP cylinder exhaust temp		t		I	R
HP cylinder exhaust flow				I	-
HP cylinder casing temp	(n)			I	
IP stop valve inlet press	(TR)			IA(H/L)	RCA(H/L)
IP stop valve inlet temp		t		I	-
Isol valve before IP stop valve				I	IC
IP/LP loop press				I	
Interceptor valves steam chest temp		t		I	
Interceptor valves steam chest press				I	
IP turbine inlet belt temp		t		I	
IP turbine inlet belt press				I	
IP cylinder casing temp	(n)	t		I	
LP cylinder exhaust temp	(n)	t		I	
Each motorized drain valve				I	IC
Each motorized drain out temp				I	
Condenser					
Condenser press	(TR)			IA(L)	IRA(L)T
Condenser temp	(DP)	t		I	R
Condenser level	(TR)	I		IA(H)	IRCA(H)T
Oil					
Turbine lub. oil tank level	(TR)	I		IA(H/L)	A(T)
Supply to bearings press	(TR)			IA(L)	A(T)
Supply to bearings temp				IA(H)	A(G)
At each bearing temp		I		IA(H)	A(G)
Cooler inlet temp		It		I	A(G)

TABLE 2 (Continued)

TURBINE/GENERATORS AND ANCILLARY EQUIPMENT

Description	Local	Local Panel	Computer	MCR
Oil (Cont'd)				
Filter diff. press	I		IA(H)	A(G)
Governor oil			IA(L)	A(G)
Dirty oil drains tank level	I		IA(H)	
Dirty oil drains pump				
Hydraulic System				
Hydraulic pumps status			IA(T)	ICA(T)
Filter diff. press	I		A(H)	A(G)
Reservoir level	I		A(H/C)	A(G)
Hydraulic press	I		IA(L)	A(G)
Hydraulic temp.	I		I	
Seal Oil System				
H/E seal oil in temp	t			
H/E seal oil out temp	It		IA(H)	A(G)
Filter DP	I		IA(H)	A(G)
Gland seal in press (TE & EE)	I		IA(H)	A(G)
Defoaming tank level			A(H)	A(G)
Gland seal out temp	t		I	
Drain tank level	I		A(L)	A(G)
Vacuum tank gauge	I		IA	A(G)
Vacuum pump				
Seal oil pump com disch press	I		I	
Gland seal diff press			IA(L)	A(G)
Seal oil back-up press	I		IA(L)	
Seal oil/hydrogen DP	I			
Condenser Air Extraction System				
Condr air ext pump			IA(T)	IC
Air/Vapor mix in valve			I	C
Separator level	I		A(L)	
Air/vapor mix in temp	t		I	
Air/vapor mix out temp	t			
Air disch flow			I	
Pump suct press			I	
Pump disch press			I	

TABLE 2 (Continued)

TURBINE/GENERATORS AND ANCILLARY EQUIPMENT

Description	Local	Local Panel	Computer	MCR
Condenser Air Extraction System				
H/E cool water in temp	t			
H/E cool water out temp	t		IA(H)	
H/E compressant in temp	t			
H/E compressant out temp	t		IA(H)	
Quick Start Condenser Air extration Pump Unit				
Generally as for main condenser air extraction pump units.				
Turbine Protective Devices				
Press unloading			A	A
Vacuum operated unloading gear actuator			A(L)	A(L)
Overspeed	(D/TR)			AT
Turbine/Generator				
Emergency stop push-button	(D)		A	A
Electrical trip			A	A
Turning gear			IA(T)	ICA(T)
Water Induction Prevention				
HP turbine			A	A(G)
IP turbine			A	A(G)
Generator				
Hydrogen conditioning monitor			IA	RA(G)
Stator windings temp	(n)		IA(H)	A(G)
Stator teeth temp	(n)		IA(H)	A(G)
Stator core temp	(n)		IA(H)	A(G)
Low excitation with leading power factor			A	
Excitation diode failure			A	
Motor earth fault			A	
Megawatts			I	IRC
Volts		I	I	I

TABLE 2 (Continued)

TURBINE/GENERATORS AND ANCILLARY EQUIPMENT

Description		Local	Local Panel	Computer	MCR
Generator					
Amps			I	I	I
Load			I	I	I
Rotor winding temp	(n)		IA(H)		A(G)
AVR local/remote			IC		IC
AVR trip to manual			A		A(G)
Field suppression switch			IC		IC
Field suppression switch local/remote			IC		I
Stator heater					
Under/over excitation			A(H/L)		A(G)
Turbine Generator Supervisory Equipment					
Speed				I	IR
Shaft eccentricities				IA(H)	RA(G)
Vibration (main bearings)				IA(H)	RA(G)T
Diff. expansion				IA(H)	RA(G)
Expansion (Casing)				IA(H)	RA(G)
Thrust bearing wear				IA(H)	RA(G)T
HP pedestal movement				IA(H)	RA(G)
Emergency stop valves status				I	I
Goveror valves				I	I
Rotor stopped alarm				A	A(G)
Metal Temperatures					
Emer Stop valve steam chest	(n)			I	
Governor valve steam chest	(n)			I	
Turbine inlet belt	(n)			I	
Turbine inner casing	(n)			I	
Turbine exhaust	(n)			I	
Bearing metal thrust brg	(n)			I	
Bearing oil drains				I	
Extraction steam (top & bottom)				I	
Steam drains				I	

TABLE 2 (Continued)

TURBINE/GENERATORS AND ANCILLARY EQUIPMENT

Description		Local	Local Panel	Computer	MCR
Generator Air Cooler					
Air inlet temp				I	
Air outlet temp		It		IA(H)	A(H)
Exciter					
H/E cooling air in temp		t		IA(H)	A(G)
H/E cooling air out temp		t		IA(H)	A(G)
Diode/thyrister/fuse fail				A	A(G)
Excitation control					C
Field suppression switch				I	IC
AVR					
AVR trips	(n)			A(T)	A(G)
AVR monitoring	(n)			I	
Hydrogen					
General fault					A(G)
Hot gas from generator temp		t		IA(H)	
Cooled gas from hydrogen coolers temp		t		IC	A(H)
CO_2 in air				I	
Hydrogen in CO_2 temp				I	
Hydrogen in air				I	
Make-up flow			IS	IS	
Hydrogen purity meter			I	IA	A(G)
Hydrogen press			ICA		
HP/LP Bypass Systems					
After HP B/P temp	(D)				IRCA(H)
After HP B/P press					IRCA(H)
HP B/P PRV		I		I	IC
HP B/P PRV spray valve				I	IC
After LP B/P temp	(D)	It		I	ICA(H)
After LP B/P press		I		I	

TABLE 2 (Continued)

TURBINE/GENERATORS AND ANCILLARY EQUIPMENT

Description	Local	Local Panel	Computer	MCR
LP B/P PRV	I		I	IC
LP B/P PRV spray valve	I		I	IC
Cold reheat NR valves			I	
HP B/P spray isol.			I	IC
LP Feedwater Heaters				
Each heater & drain cooler:				
Steam in press			I	
Steam in temp	t			
F.W. out temp	t		I	
F.W. out press	t			
F.W. in temp	t		I	
F.W. in press	t			
Drain out temp	t			
Heater body press	I			
Level	I		IA	IRCA(T)T
Condst in isol	I		I	IC
Condst out isol	I		I	IC
Heater B/P	I		I	IC
No. 5 drain to condst control valve	I		I	IC
No. 5 drain to No. 6 control valve	I		I	IC
No. 5 drain to No. 6 isol valve	I		I	IC
No. 6 drain to condst control valve	I		I	IC
No. 6 drain to No. 7 control valve	I		I	IC
No. 6 drain to No. 6 isol valve	I		I	IC
No. 5 condst out pH		I	IA(H/L)	A(G)

TABLE 2 (Continued)

TURBINE/GENERATORS AND ANCILLARY EQUIPMENT

Description		Local	Local Panel	Computer	MCR
HP Feedwater Heaters					
Each heater					
Steam in temp		t			
Steam in isol					
FW out temp		t			
FW out press		t			
FW in temp		t			
FW out press		t			
Drain out temp		t			
Heater body press		t			
Level	(D)	I		IA(H/L)	RCA(G)T
HP htr 1 FW out isol		I		I	C
HP htr 1 FW in isol		I		I	C
HP htr 1 B/P		I		I	C
HP htr 2 FW out isol		I		I	C
HP htr 3 FW in isol		I		I	C
HP htr 2/3 B/P		I		I	C
HP htr 1 drain to 2 control valve		I		I	IC
HP htr 1 drain to 2 isol		I		I	IC
HP htr 1 drain to 3 control valve		I		I	IC
HP htr 1 drain to 3 isol		I		I	IC
HP htr 1 drain to condenser control		I		I	IC
HP htr 3 drain to Condr control		I		I	IC
Deaerator					
D/A steam (HP) inlet isol				I	IC
D/A steam (IP) inlet isol				I	IC
D/A aux steam inlet isol				I	IC
D/A steam in press		I		I	R
D/A steam in temp		t		I	R
D/A condensate in temp		t		I	
D/A storage tank temp		t		I	
D/A storage tank level (TR)		I		IA(H/L)	ICRA(G)T

TABLE 2 (Continued)

TURBINE/GENERATORS AND ANCILLARY EQUIPMENT

Description	Local	Local Panel	Computer	MCR
D/A level control valve			I	IC
D/A level control valve B/P			I	IC
D/A high level control valve			I	IC
D/A high level control valve isol			I	IC
D/A recirc disch isol			I	IC
D/A FW out temp			I	R
D/A FW out conductivity		I	IA(H)	RA(G)
D/A FW out pH		I	IA(H/L)	RA(G)
D/A FW out O_2		I	IA(H)	RA(G)
Feedwater				
Reserve FW tank in isol			I	IC
Reserve FW header dist isol			I	IC
Reserve FW tank level	I		IA(H/L)	
Emer exhaust spray pump			IA(T)	ICA
Emer exhaust spray suct press	I			
Emer exhaust spray disch press	I			
FW make-up pumps			IA(T)	ICA(T)
FW make-up pumps disch press	I			
FW make-up pumps common disch press			I	
FW make-up pumps disch isol			I	IC
Condensate System				
Condenser hotwell Conductivity (n)	I (portable)			
Condst ext pumps common suct press	t		IA(H/L)	C
Condst ext pumps suct isol valve	I		I	IC
Condst ext pumps suct press	I			
Condst ext pumps filter DP	I		A	
Condst ext pumps			IA(T)	ICA(T)

TABLE 2 (Continued)

TURBINE/GENERATORS AND ANCILLARY EQUIPMENT

Description	Local	Local Panel	Computer	MCR
Condst ext pumps press	I		I	
Condst ext pumps disch valve	I		I	IC
Condst flow			I	IRC
Condst ext pumps common disch press			IA	
Condst ext pumps common conductivity		I	IA(H)	RA(G)
Condst ext pumps common O_2		I	IA(H)	RA(G)
Condst ext pumps comon pH		I	IA(H/L)	RA(G)
Condst ext pumps common Na		I	IA(H)	RA(G)
Condst ext pumps common temp	t		I	
Condst ext pumps common SiO_2		I	IA(H)	RA(G)
After chemical injection pH		I	IA(H/L)	RA(H/L)
Condenser level control valve	I		I	IC
Condenser level control B/P			I	IC
Condst low level recirc control valve	I		I	IC
Condst low level recirc control B/P	I		I	IC
Extraction pump emer recirc control				
Extraction pump emer recirc B/P				
Condst dump to waste			I	IC
Spray to LP exhaust control valve			I	IC
Spray to LP exhaust control B/P			I	IC
Gland Steam Condenser				
Condensate in temp	t		I	
Condensate out temp	t		I	
Steam inlet temp	t			

TABLE 2 (Continued)

TURBINE/GENERATORS AND ANCILLARY EQUIPMENT

Description		Local	Local Panel	Computer	MCR
Drain outlet temp		t			
Shell pressure		I			
Clean drains tank level		I			
Clean drains tank temp		t			
Clean drains tank level				IA(H/L)	
LP heater 8A inlet isol				I	C
LP heater 8A outlet isol				I	C
LP heater 8B inlei isol				I	C
LP heater 8B outlet isol				I	C
LP heater 8A/8B B/P					
LP dosing pump					ICA(T)
Dosing pump disch press		I			
Tank/end		I			
Tank mixer					IC
<u>Circulating Water</u>					
Condenser in temp	(n)	t		I	I
Condenser in press				IA(L)	
Condenser in flow				I	
Condenser out temp	(n)			IA(H)	I
Condenser in isol valve		I		I	IC
CCCW H.E. in temp		t			
CCCW H.W. out temp		It		IA(H)	
Head tank level		I		IA(H/L)	
Stator cooling pumps disch press		I		I	
Stator cooling pumps				IA(T)	ICA(T)
Stator HE input temp		It			
Stator HE output temp		It		IA(H)	
Cooling water to stator flow		I			
Cooling water filter diff press		I		A(H)	
Stator discharge temp		It		IA(H)	
Hydrogen degassing system				A	A
Conductivity				IA(N)	A(G)

TABLE 2 (Continued)

TURBINE/GENERATORS AND ANCILLARY EQUIPMENT

Description	Local	Local Panel	Computer	MCR
Closed Circuit Cooling Water				
F.P. oil coolers in temp	t			
F.P. oil coolers out temp	t		IA(H)	
F.P. oil coolers in control	C		I	
Gen seal oil coolers in temp	t			
Gen seal oil coolers out temp	t		IA(H)	
Gen seal oil coolers in control	C		I	
Stator coolers in temp	t			
Stator coolers out temp	t		IA(H)	
Hyd fluid coolers in temp	t			
Hyd fluid coolers out temp	t		IA(H)	
T/G main oil coolers in temp	t			
T/G main oil coolers out temp	t		(A(H)	
T/G main oil coolers in control	C			
Sta B/P fluid coolers in temp	t			
Sta b/P fluid coolers out temp	t		(IA(H)	
G.R. fan oil coolers in temp	t			
G.R. fan oil coolers out temp	t		IA(H)	
Fans oil coolers in temp	t			
Fans oil coolers out temp	t		IA(H)	
Air comp coolers in temp	t			
Air comp coolers out temp	t		(IA(H)	
Sample coolers out flow	I			
Sample coolers out temp	I			A(G)
H_2 cooler in temp	t			
H_2 cooler out temp	It		A	A(G)
H_2 leakage			A	A(G)

TABLE 2 (Continued)

TURBINE/GENERATORS AND ANCILLARY EQUIPMENT

Description	Local	Local Panel	Computer	MCR
Exciter air cooler in temp	t			
Exciter air cooler out temp	t		IA(H)	A(G)

TABLE 3

AUXILIARY SYSTEMS

Description	Local	Local Panel	Computer	MCR
Circulating Water (C.W.) Plant				
CW pumps status	C		IA(T)	ICA(T)
CW pumps disch press	-		IA(L)	-
CW pumps (each fault)			A	-
CW pumps (group fault)			-	A(G)
CW pumps disch valve	C		I	IC
CW pumps disch chlorine monitor	R		IRA(H/L)	A(G)
Loss of injection water flow			A	A(G)
Motor air coolers CW out temp Oil bearing coolers CW out temp	I		IA(H)	
Disch valve hydraulic system press			A	
Instrument Air System				
Ring main press (2 minimum)		I	IA(L)	
Compressor		IC	I	
Instrument air tie open		A	A	A(G)
Compressor disch press		I	I	
System faults		A	A	A(G)
Compressor disch press		I		
Compressor disch temp		I		
Compressor oil press		I		
Compressor oil temp		I		
Compressor water out flow		I		
Compressor water out temp		I		
Aftercooler water out press		I		
Aftercooler water out flow		I		
Aftercooler water out temp		I		
Aftercooler air inlet temp		I		
Dryer press diff		I		
Dryer set in use		I		
Dryer absorber in operation		I		
Dryer dewpoint		A	A	A(G)
Dryer C/O fault		A	A	A(G)
Dryer moisture		A	A	A(G)

TABLE 3 (Continued)

AUXILIARY SYSTEMS

Description	Local	Local Panel	Computer	MCR
Auxiliary Steam System				
Aux steam main press	I		IA(H/L)	
Aux steam main temp	I		IA(H/L)	
Cold reheat PRV out press	I			
Cold reheat PRV out temp	It			
PRV steam out press			IA(H/L)	C
PRV steam out temp			IA(H/L)	C
PRV steam in flow				
Cold reheat isol			I	IC
Cold reheat flow			I	IC
Steam from Htr 3 flow			I	IC
Circulating Water Plant				
Screens status		ICA(T)	IA(T)	
Screens fault		A	A(G)	A(G)
Screens diff press		ICA(H)	A(A)	A(G)
Screen Washwater System				
Screen washwater pump			IA(T)	ICA(T)
Screen washwater pump disch press	I		I	
Screens diff press	I		IA	A(G)
Clean Drains Recovery System				
Clean drains recovery tank level	I		IA(H/L)	C
Clean drains recovery pumps			IA(T)	ICA(G)
Clean drains recovery pumps suct press	I			
Clean drains recovery pumps disch press	I			
HP Drains Vessel Spray Water System				
Spray water pumps			IA(T)	ICA(T)
Spray water pumps suct press	I			
Spray water pumps disch press	I		I	

TABLE 3 (Continued)

AUXILIARY SYSTEMS

Description	Local	Local Panel	Computer	MCR
Closed Circuit Cooling Water System				
CCWW head tank level	I		IA(H/L)	CA(G)
CCWW pump			IA(T)	ICA(T)
CCWW pump disch press	I		I	C
CCWW pump suct press	I			
HE cooling water in temp	It			
HE cooling water out temp	It		IA(H)	
Emergency disch valve			IA	AUTO
Recirc to CCCW tank	I			
CCCW make-up pump			IA(T)	ICA(T)
CCCW make-up pump disch press	I			
CCCW make-up pump suct press	I			
Chilled water tank level	I		A(H/L)	C
Emer Gen header tank level	I		A(H/L)	C
Turbine Oil Bulk Storage System				
Clean oil storage tank level	I			
Dirty oil transfer tank level	I			
Transfer pump	IC			
Transfer pump suction	I			
Transfer pump disch	I			
GS Air System				
Ring main press (4 off)	I		IA(L)	
Compressors disch press	I			
System fault			A	A(G)
Compressor	ICA(T)			
Compressor control temp	I			
Compressor oil press	I			
Compressor oil temp	I			
Compressor water flow	I			
Compressor water temp	I			

TABLE 3 (Continued)

AUXILIARY SYSTEMS

Description	Local	Local Panel	Computer	MCR
Aftercooler water in press	I			
Aftercooler water out flow	I			
Aftercooler water out temp	I			
Aftercooler air out temp	I			
Receiver press	I			
Lubricating Oil System				
Oil to brgs press	It	IA(L)		
Oil to brgs temp	It	I		
Oil from brgs flow	I	(H)		
Oil from brgs temp	It	IA(H)		
Oil filter press diff	I	A(H)		
Storage tank level	I	A(L)		A(G)
Transfer pumps		ICA(T)		A(G)
Flow		IS		
Used oil tank level	I			
Sump tank level	I			
Lub. oil press low (trip)		A		A(GT)
Fuel Oil				
Fuel oil tank level	I	A(H/L)		
Fuel oil filter press diff	I	A(H)		
Fuel oil flow	t	IS		
Pumps		ICA(T)		A(G)
Standby pump		I		
Press to engine		I		
Temp to engine		I		
Fuel shut-off valve		IC		IC
Start-air System				
Start-up air receiver press	I	A(L/T)		
Start-up air to engine press	It			

TABLE 3 (Continued)

AUXILIARY SYSTEMS

Description	Local	Local Panel	Computer	MCR
Cooling System				
Cooling water head tank level	I	A(L)		A(G)
Cooling water head tank temp	It	IA(H)		A(G)
Jacket water temp		A		A(H/L)

TABLE 4

AUXILIARY BOILER

Description	Local	Local Panel	Computer	MCR
Output steam press		I	I	R
Output steam temp		I	I	R
Output steam flow			I	RS
Essential trips			A(G)	
Essential trips			A(G)	
Steam transfer valve		I	I	IC
All controls, indications and alarms for boiler operation		IRCA		
Water supply pump		ICA(T)		