PN-ABF-019

Pakistan
Water and Power Developmen
Authority

Lakhra Coal Mine and
Power Generation Feasibility Stu

Power Plant Feasibility
Volume V

January 1986

Sponsored by

United States Agency for
International Development

P

Gilbert/Commonwealth International, ...

LAKHRA COAL MINE AND POWER GENERATION FEASIBILITY STUDY

POWER PLANT FEASIBILITY

VOLUME V

Submitted to

U.S. AGENCY FOR INTERNATIONAL DEVELOPMENT

and

PAKISTAN WATER AND POWER DEVELOPMENT AUTHORITY

By

Gilbert/Commonwealth International, Inc.
209 East Washington Avenue
Jackson, Michigan 49201

R-2748

January, 1986

LAHKRA POWER FEASIBILITY STUDY

TABLE OF CONTENTS

		Page
VOLUME I		
	EXECUTIVE SUMMARY	
1.0	INTRODUCTION	1-1
2.0	SCOPE OF STUDY	2-1
3.0	SYSTEM PLANNING AND COST ANALYSIS	3-1
3.1	FIRST SERIES OF GENERATION PLANNING STUDIES	3-1
3.2	SECOND SERIES OF GENERATION PLANNING STUDIES	3-10
3.3	LAKHRA TRANSMISSION SYSTEM STUDIES	3-18
3.4	IMPORTED COAL TRANSMISSION STUDIES	3-28
3.5	COST ANALYSIS FOR 300 MW UNIT SIZE	3-32
3.6	POST-STUDY REVISIONS - GENERATION AND TRANSMISSION PLANNING STUDIES	3-34
	APPENDIX 3.1 - WASP-3 Computer Generated Study Report, First Series of Generation Planning Studies	3-123
	APPENDIX 3.2 - WASP-3 Computer Generated Study Report, Second Series of Generation Planning Studies	3-179
	APPENDIX 3.3 - Load Flow and Transient Stability Plots	3-235
	APPENDIX 3.4 - Transmission System Cost Estimates	3-283
4.0	LAKHRA COAL CHARACTERISTICS	4-1
4.1	FUEL ANALYSES	4-1
4.2	COAL WASHABILITY ANALYSIS	4-9
4.3	FUEL SAMPLE COLLECTION AND SHIPMENT	4-21
4.4	TEST BURN, BASELINE PMDC NO. 2	4-31

LAHKRA POWER FEASIBILITY STUDY

TABLE OF CONTENTS
(Continued)

		Page
4.5	TEST BURN, WASHED PMDC NO. 2	4-39
4.6	TEST BURN, BT-11 TEST SHAFT	4-44
4.7	INVESTIGATION, "SIMILAR" ASH COAL TO LAKHRA ASH COAL	4-47
4.8	BOILER DESIGN PARAMETERS FOR LAKHRA COAL	4-51
5.0	POWER PLANT DESIGN CHARACTERISTICS	5-1
5.1	GENERAL	5-1
5.2	SITE SURVEYS	5-1
5.3	SITE PLANS	5-6
5.4	ENVIRONMENTAL GUIDELINES	5-11
5.5	BASIS OF DESIGN ANALYSIS (BODA)	5-55
5.5.1	Plan Layouts	5-55
5.5.2	Soils/Rock, Water, Climate Characterization	5-73
5.5.3	Fuel, Chemical, Raw Material, Wastewater Requirements	5-80
5.5.4	System Design	5-81
5.5.5	Equipment Specifications	5-84
5.5.6	Analysis of Environmental Control Technologies	5-86
5.5.7	Availability	5-97
5.5.8	Alternative Fuel Capabilities	5-100
5.5.9	Cooling Tower Considerations	5-105
5.6	CONSTRUCTION PHASE AND SCHEDULE CONSIDERATIONS	5-107

LAHKRA POWER FEASIBILITY STUDY

TABLE OF CONTENTS
(Continued)

		Page
VOLUME II		
6.0	INSTITUTIONAL DEVELOPMENT	6-1
6.1	INTRODUCTION	6-1
6.2	COAL POWER PROJECTS DEPARTMENT	6-6
6.3	PROJECT ORGANIZATION (DESIGN AND CONSTRUCTION)	6-56
6.4	PROJECT ORGANIZATION (START-UP AND TEST)	6-65
6.5	STATION ORGANIZATION (OPERATION AND MAINTENANCE)	6-71
	APPENDIX 6.1 - Organization Chart	6-79
	APPENDIX 6.2 - Job Descriptions	6-83
	APPENDIX 6.3 - Guidelines for Evaluation of Project Organizations, Major Construction Projects, and Support of Operations and Maintenance Activities	6-187
	APPENDIX 6.4 - G/C CUE	6-269
7.0	TRAINING	7-1
7.1	INTRODUCTION	7-1
7.2	WAPDA TRAINING CAPABILITIES AND ORGANIZATION	7-1
	7.2.1 Approach	7-1
	7.2.2 WAPDA Academy	7-2
	7.2.3 WAPDA Training Institutes	7-3
7.3	TRAINING NEEDS ASSESSMENT	7-6
	7.3.1 Approach	7-6
	7.3.2 Coal Power Projects Department	7-7

LAHKRA POWER FEASIBILITY STUDY

TABLE OF CONTENTS
(Continued)

		Page
VOLUME II CONT'D		
	7.3.3 Thermal Power Station Organization	7-8
	7.3.4 Training Institute Organization	7-10
7.4	PRELIMINARY TRAINING PLAN	7-11
	7.4.1 Organization	7-11
	7.4.2 Plan	7-15
	7.4.3 Estimated Cost	7-19
	APPENDIX 7.1 - Training Course Outlines	7-25
	APPENDIX 7.2 - Extract from PC-II Proforma; Training of WAPDA Officers 1985: Foreign Training Requirements of Generation	7-139
	APPENDIX 7.3 - Extract from USAID Participant Training Plans (Lakhra); FY-1985, Coal Power Station Proposed Training Fields	7-143
VOLUME III		
8.0	CAPITAL COSTS OF POWER PLANT	8-1
8.1	ESTIMATE BASIS	8-1
8.2	EXCLUSIONS	8-7
8.3	CAPITAL COST ANALYSIS	8-7
8.4	Coal Washing - Power Plant Cost Differential	8-9
8.5	Flue Gas Desulfurization Options	8-9
8.6	Operation and Maintenance	8-10
	APPENDIX 8.1 - Cost Details for the Khanot Site	8-25
9.0	CONCLUSIONS	9-1
10.0	RECOMMENDATIONS	10-1

LAHKRA POWER FEASIBILITY STUDY

TABLE OF CONTENTS
(Continued)

VOLUME IV

APPENDIX A - SPECIFICATIONS

MATERIAL SPECIFICATIONS

Chemicals
No. 2 Fuel Oil
No. 6 Fuel Oil
Limestone

MECHANICAL SPECIFICATIONS

M-1 Boiler Island
M-2 Turbine Generators and Accessories
M-3 Condenser
M-4A Electrostatic Precipitator
M-4B Wet Flue Gas Desulfurization System

VOLUME V

APPENDIX A - SPECIFICATIONS

MECHANICAL SPECIFICATIONS

M-5 Feedwater Heaters
M-6 Deaerator
M-7 Motor Driven Boiler Feed Pumps
M-8 Condensate Pumps
M-9 Circulating Water Pumps
M-10 Mechanical Draft Cooling Tower
M-11 Cycle Make-up Demineralizer System
M-12A Wastewater Treatment Equipment
M-12B Sanitary Wastewater Treatment System
M-13 High Pressure Power Piping and Hangers
M-14 Fly Ash Handling System (Vacuum Type)
M-15 Closed Circuit Cooling Water Heat Exchangers
M-16A Diesel Engine and Electric Motor Driven Fire Pump and Accessories
M-16B In-Plant and Yard Fire Protection

LAHKRA POWER FEASIBILITY STUDY

TABLE OF CONTENTS
(Continued)

VOLUME VI

APPENDIX A - SPECIFICATIONS

MECHANICAL SPECIFICATIONS

M-17 Low Pressure Piping
M-18 Traveling Water Screens

CIVIL/STRUCTURAL SPECIFICATIONS

S-1A Supply of Concrete
S-1B Concrete Work
S-2 Structural Steel
S-3 Turbine Room Overhead Crane
S-4 Coal Handling System
S-5 Circulating Water Piping
S-6 Reinforced Concrete Chimney with Brick Liners

ELECTRICAL SPECIFICATIONS

E-1 Motors Under 200 KW
E-2 Motors 200 KW and Over
E-3 Medium Voltage Switchgear
E-4 Motor Control Centers
E-5 Diesel Generator
E-6 Auxiliary Power Transformer
E-7 Step-Up Transformer

INSTRUMENTATION AND CONTROL SPECIFICATIONS

I-1 Instrumentation and Control System

VOLUME VII

APPENDIX B - DRAWINGS

SITE ARRANGEMENTS
Figure 5.3-1 Khanot Site, Plant Site General Arrangement
Figure 5.3-2 Khanot Site General Arrangement
Figure 5.3-3 Lakhra Site, Plant Site General Arrangement
Figure 5.3-4 Lakhra Site, General Arrangement

LAHKRA POWER FEASIBILITY STUDY

TABLE OF CONTENTS
(Continued)

PLANT ARRANGEMENTS

Figure 5.5.1-1	Ground Floor Plan
Figure 5.5.1-2	Mezzanine Floor and Misc. Floor Plans
Figure 5.5.1-3	Operating Floor Plan
Figure 5.5.1-4	Plant Cross Section
Figure 5.5.1-5	Longitudinal Cross Section

FLOW DIAGRAMS

Figure 5.5.3-1	Water Balance Diagram
Figure 5.5.3-2	Material Balance Diagram
Figure 5.5.4I-1	Turbine Heat Balance, SI Units
Figure 5.5.4I-2	Turbine Heat Balance, SI Units
Figure 5.5.4I-3	Turbine Heat Balance, English Units
Figure 5.5.4I-4	Turbine Heat Balance, English Units
Figure 5.5.4IX-1	Water Treatment Diagram
Figure 5.5.4XI-1	Auxiliary Steam Diagram
Figure 5.5.4XII-1	Compressed Air Diagram
Figure 5.5.4XVI-1	Fire Protection System Diagram
Figure 5.5.4XX-1	Coal Flow Diagram
Figure 5.5.4XX-1a	Inplant Coal Flow Diagram

SINGLE LINE DIAGRAMS

Figure 5.5.4XXI-1	Generator and Station Power
Figure 5.5.4XXII-1	Emergency Power System

VOLUME VIII

APPENDIX C - SUPPLEMENTAL REPORTS

Roberts & Schaefer Co. Coal Washablility Analysis

GCII Geotechnical Investigation

WAPDA Ground Water Resistivity Survey at Khanot

APPENDIX D - WORK PLAN

VOLUME IX

COMBUSTION ENGINEERING TEST REPORTS

LIST OF TABLES

Number		Page
4.1-1	Fuel Analyses	4-71
4.1-2	Composite Drill Core Analyses, Unwashed Coal (Boiler Specification Basis)	4-73
4.1-3	Composite Drill Core Analyses, Washed Coal (Boiler Specification Basis)	4-74
4.2-1	Effects of Total Cleaning on Ash/Sulfur Removal and Btu Recovery (Seam Only)	4-75
4.2-2	Effects of Total Cleaning on Ash/Sulfur Removal and Btu Recovery (Seam + 10% Dilution)	4-76
4.2-3	Effects of Partial Cleaning on Ash/Sulfur Removal and Btu Recovery (Seam Only - 4" x 1/2" Cleaned, 1/2" x 0 Raw)	4-77
4.2-4	Effects of Air Drying on Ash/Sulfur Removal and Btu Recovery	4-78
4.2-5	Effects of Size Reduction on Ash/Sulfur Removal and Btu Recovery	4-79
4.2-6	Summary of Whole Coal Analyses	4-80
4.2-7	Raw Vs. Clean Indices	4-81
4.2-8	Sample Summary	4-82
4.2-9	Distribution Curve Determination	4-83
4.2-10	Summary of Whole Coal Analyses (Plant Run)	4-84
4.2-11	Raw Vs. Clean Indices (Plant Run)	4-85
4.2-12	Mass Balance Measurements and Determination	4-86
4.4-1	Test Fuel Analyses	4-87
4.4-2	Preliminary FPTF Results - Pulverized Characteristics	4-88
4.4-3	Lakhra Baseline Coal Evaluation Test Matrix	4-89
4.4-4	Preliminary FPTF Results	4-90

LIST OF TABLES

Number		Page
4.4-5	Preliminary FPTF Results	4-91
4.4-6	Lakhra Baseline Coal Furnace Slagging Results	4-92
4.4-7	Preliminary FPTF Results - Convective Pass Fouling Characteristics	4-93
4.4-8	Preliminary FPTF Results - In-Site Fly Ash Resistivity Measurement	4-94
4.4-9	Preliminary FPTF Results - Ash Loading, Gas Velocity, Erosion Rate	4-95
4.4-10	Lahkra Coal Corrosion Probe Results	4-96
4.5-1	Test Fuel Analysis for Lakhra Washed and Baseline Coal	4-97
4.5-2	Preliminary FPTF Pulverization Results	4-98
4.5-3	Lakhra Washed Test Matrix	4-99
4.5-4	Preliminary FPTF Results - Relative Combustion Characteristics	4-100
4.5-5	Preliminary FPTF Results - Furnace Slagging Characteristics	4-101
4.5-6	Lakhra Washed Coal Characterization, FPTF Slagging Results	4-102
4.5-7	Preliminary FPTF Results - Convective Pass Fouling Characteristics	4-103
4.5-8	Preliminary FPTF Results - In-Site Fly Ash Resistivity Measurement	4-104
4.6-1	Lakhra Coal Performance Characteristics	4-105
4.6-2	Lakhra Coal Sample Analyses	4-106
4.7-1	Similar Ash Coal Comparison	4-107
5.4-1	World Bank SO_2 Emissions Criteria	5-43
5.4-2	Threshold Limit Values (TLV) for Dusts	5-44
5.4-3	Summary of Major Power Plant Wastewater Discharges	5-46

LIST OF TABLES (Continued)

Number		Page
5.4-4	Selected Pollutants Often Associated with Power Plant Waste Streams	5-47
5.4-5	Effluent Guidelines for Power Plant Wastewater Discharge to Surface Waters	5-49
5.4-6	Guidelines for Drinking Water Quality (World Health Organization - 1984)	5-51
5.5.2-1	Ground Water Quality	5-76
5.5.2-2	Water Quality of Indus River	5-77
5.5.2-3	Discharge Characteristics of Indus River at Sehwan for the Years 1972-75 and 1979	5-78
5.5.2-4	Meteorological Summary Data from Hyderabad (1931-1960)	5-79
7.2.3	Training Courses Administered at Guddu Training Center	7-5
7.4.1	System Design Descriptions	7-14
7.4.3 (a)	Estimated Cost of Module 1000 Training Courses	7-20
7.4.3 (b)	Estimated Cost of Module 2000 Training Courses	7-21
7.4.3 (c)	Estimated Cost of Module 3000 Training Courses	7-22
7.4.3.(d)	Estimated Cost of Module 4000 Training Courses	7-23
8.1	Cost Summary for Lakhra Units 1 & 2 in U.S. Dollars	8-11
8.2	Cost Summary for Lakhra Units 1 & 2 in Rupees	8-12
8.3	Account Summary for Lakhra Unit 1 & 2 in U.S. Dollars	8-13
8.4	Account Summary for Lakhra Unit 1 & 2 in U.S. Dollars	8-16
8.5	Cash Flow for Lakhra Unit 1	8-18
8.6	Cost Summary for Khanot in U.S. Dollars	8-19
8.7	Cost Summary for Khanot in Rupees	8-20

LIST OF TABLES (Continued)

Number		Page
8.8	Account Summary for Khanot Unit 1 in U.S. Dollars	8-21
8.9	Account Summary for Khanot Unit 2 in U.S. Dollars	8-24
8.10	Cash Flow for Khanot Unit 1	8-26
8.11	SO_2 Emission, Option 2 - Washed Coal	8-27
8.12	SO_2 Emission, Option 3 - 1,000 TPD Site Emission Limit	8-28
8.13	SO_2 Emission, Option 4 - 750 TPD Site Emission Limit	8-29
8.14	SO_2 Emission, Option 5 -500 TPD Site Emission Limit	8-30
8.15	Comparison of Lakhra SO_2 Emission Options	8-31
8.16	Comparsion of Khanot SO_2 Emission Options	8-32
8.17	Lakhra Staffing Plan and Operation and Maintenance Annual Costs	8-33
8.18	Khanot Staffing Plan and Operation and Maintenance Annual Costs	8-36
8.19	Vendors Solicited for Budgetary Quotes	8-39
8.20	Prefabricated Process Piping International Pricing Comparison	8-40
4.2.1	PMDC Mine No. 2 Seam Cross Section	4-109
4.2.2	Characteristic Washability Curve 4" x 100M Size Fraction, Lakhra Field-PMDC Mine No. 2	4-110
4.2.3	Characteristic Washability Curve, 4" x 1-1/2" Size Fraction, Lakhra Field-PMDC Mine No. 2	4-111
4.2.4	Characteristic Washability Curve, 1-1/2" x 3/4" Size Fraction, Lakhra Field-PMDC Mine No. 2	4-112

LIST OF FIGURES

Number		Page
4.2.5	Characteristic Washablity Curve, 3/4" x 1/2" Size Fraction, Lakhra Field-PMDC Mine No. 2	4-113
4.2.6	Characteristic Washability Curve, 1/2" x 1/4" Size Fraction, Lakhra Field-PMDC Mine No. 2	4-114
4.2.7	Characteristic Washability Curve, 1/4" x 28M Size Fraction, Lakhra Field-PMDC Mine No. 2	4-115
4.2.8	Characteristic Washability Curve, 28M x 100M Size Fraction, Lakhra Field-PMDC Mine No. 2	4-116
4.2.9	Btu/lb. vs. Ash (4" x 100M - Seam Only)	4-117
4.2.10	Effects of Total Cleaning on Ash/Sulphur Removal and Btu Recovery	4-118
4.2.11	Total vs. Partial Cleaning and the Effect on Ash/Sulphur Removal and Btu Recovery (Seam Only)	4-119
4.2.12	Raw Coal Size Reduction Due to Air Drying	4-120
4.2.13	East Fairfield Coal Company Flowsheet	4-121
4.2.14	Distribution Curve for 2-1/2" x 28M Raw Coal Cleaned in Heavy Medium Cyclones	4-123
4.4-2	Lakhra Baseline Coal Evaluation	4-125
4.4-3	Lakhra Baseline Coal Evaluation	4-126
4.4-4	Lakhra Baseline Coal Evaluation	4-127
4.4-5	Lakhra Baseline Coal Evaluation	4-128
4.4-6	Lakhra Baseline Coal Evaluation	4-129
4.4-7	Lakhra Baseline Coal Evaluation	4-130
4.4-8	Lakhra Baseline Coal Evaluation	4-131
4.5-1	Lakhra Washed Coal Evaluation	4-132
4.5-2	Lakhra Washed Coal Evaluation	4-133

LIST OF FIGURES

Number		Page
4.5-3	Lakhra Washed Coal Evaluation	4-134
4.5-4	Lakhra Washed Coal Evaluation	4-135
4.5-5	Lakhra Washed Coal Evaluation	4-136
4.5-6	Lakhra Washed Coal Evaluation	4-137
4.7-1	Site Elevation B&W Boiler	4-138
4.7-2	Design Information B&W Boiler	4-139
4.7-3	Design Information CE Boiler	4-140
4.7-4	Coal Analysis CE Boiler	4-141
4.7-5	Design Information FW Boiler	4-142
4.7-6	Side Elevation FW Boiler	4-143
4.7-7	Coal Analysis FW Boiler	4-144
4.7-8	Ash Analysis FW Boiler	4-145
5.2.1	Lakhra Area Map	5-2
5.5.1.6-1	Coal Laboratory and Sample Preparation Area	5-64
5.6.2	Master Project Schedule	5-111
5.6.3	Progressive Manufacture of Boilers and Turbines in Pakistan	5-117
5.6.4	Letter in Reference to Progressive Manufacture of Boilers and Turbines in Pakistan	5-126
5.6.5	Letter in Reference to Local Manufacturing of Boilers/Turbine	5-129
5.6.6	Letter in Reference to Progress in Manufacture of Boilers in Pakistan	5-132
5.6.7	Letter in Reference to Progressive Manufacture of Boilers and Turbines in Pakistan	5-134

LIST OF FIGURES (Continued)

Number		Page
6.2.1	CPPD Responsibilities Throughout Project Phases	6-32
6.2.2	Recommended CPPD Head Office Staff Activities	6-33
6.2.3	Recommended Coal Power Projects Department Organization	6-51
6.2.4	Coal Power Projects Department; WAPDA Staffing Plan for Key Personnel	6-54
6.2.5	Summary of Base Salary Costs (Rupees)	6-55
6.3.2(a)	Lakhra Project Organization (Design and Construction)	6-57
6.3.2(b)	Lakhra Construction Management Organization	6-58
6.3.3	Construction Management Manual; Table of Contents	6-63
6.3.4	Project Organization (Design and Construction); WAPDA Staffing Plan for Key Personnel	6-64
6.4.2	Lakhra Project Organization (Start-up and Test)	6-66
6.4.3	Start-up Manual; Table of Contents	6-68
6.4.4	Project Organization (Start-up and Test); WAPDA Staffing Plan for Key Personnel	6-70
7.4.2(a)	Coal Power Projects Department; Preliminary Training Plan	7-16
7.4.2(b)	Project Organization (Design and Construction); Preliminary Training Plan	7-17
7.4.2(c)	Project Organization (Start-up and Test); Preliminary Training Plan	7-18

LIST OF EXHIBITS

No.		Page
3.1	Pakistan Planning Commission 1986-2005 Load Forecast Used in Generation Planning Studies	3-47
3.2	Fuel Cost Data Used in Generation Planning Studies	3-48
3.3	Fixed System Thermal Units	3-49
3.4	Fixed System Hydro Units	3-51
3.5	Earliest In-Service Dates for Various Types of Thermal Units Considered in the Generation Planning Studies	3-52
3.6	Variable System Thermal Additions	3-53
3.7	Variable System Hydro Additions	3-54
3.8	Summary of Capital Costs in Dollars/kW for Alternate Thermal Power Plant Additions	3-55
3.9	Summary of Capital Costs in Dollars/kW for Variable System Hydro Additions	3-56
3.10	First Series of WASP-3 Computer Studies, Optimum Generation Expansion Program for the WAPDA System	3-57
3.11	First Series of WASP-3 Computer Studies, Capacity Factors in Percent for Various Periods for the First Domestic Coal Unit	3-60
3.12	First Series of WASP-3 Computer Studies, Capacity Factors in Percent for Various Periods for Three Domestic Coal Units (300 MW Each) and Two Imported Coal Units (600 MW Each)	3-61
3.13	First Series of WASP-3 Computer Studies, Coal Consumption for the First Year of Operation for One 300 MW Domestic Coal Unit	3-62
3.14	Data for Alternate 300 MW Unit Additions	3-63
3.15	Summary of Capital Costs in Dollars/kW for Alternate 300 MW Unit Additions	3-64
3.16	First Series of WASP-3 Computer Studies, Comparison of Alternate Generation Expansion Plans	3-65

LIST OF EXHIBITS
(Continued)

No.		Page
3.17	First Series of WASP-3 Computer Studies, Cumulative Present Worth Through the Year 2005 vs. Coal Cost	3-67
3.18	Power Cost as a Function of Capacity Factor	3-68
3.19	Second Series of WASP-3 Computer Studies, Optimum Generator Expansion Program for the WAPDA System	3-69
3.20	Second Series of WASP-3 Computer Studies, Capacity Factors in Percent for Various Periods for the First Domestic Coal Unit (300 MW) (1990-1991)	3-71
3.21	Second Series of WASP-3 Computer Studies, Capacity Factors in Percent for Various Periods for Three Domestic Coal Units (300 MW Each) and Three Imported Coal Units (600 MW Each) (1999-2000)	3-72
3.22	Second Series of WASP-3 Computer Studies Comparison of Alternate Generation Expansion Plans	3-73
3.23	Second Series of WASP-3 Computer Studies, Cumulative Present Worth Through the Year 2005 vs. Coal Cost (300 MW Unit Size)	3-76
3.24	Typical Transmission System Characteristics	3-77
3.25	Approximate Power Plant Site Locations	3-78
3.26	Alternative Transmission Plans	3-79
3.27	Plan J.1 Jamshoro Substation One-Line Diagram	3-80
3.28	Plan J.2 Jamshoro Substation One-Line Diagram	3-81
3.29	Plan L.1/K.1 Lakhra/Khanot Substation One-Line Diagram	3-82
3.30	Plan L.1/K.1 Jamshoro Substation One-Line Diagram	3-83
3.31	Plan L.2/K.2 Lakhra/Khanot Substation One-Line Diagram	3-84
3.32	Plan L.2/K.2 Jamshoro Substation One-Line Diagram	3-85

.M

LIST OF EXHIBITS
(Continued)

No.		Page
3.33	Three Phase Short Circuit Currents	3-86
3.34	Comparison of Lakhra Transmission Plans, Transmission Line Length and Major Sub-Station Equipment	3-87
3.35	Capital Costs of Lakhra Alternative Transmission Plans	3-88
3.36	Economic Comparison of Lakhra Transmission Alternatives	3-89
3.37	Computation of Transmission Losses from Lakhra/Khanot to Jamshoro	3-90
3.38	1991 Plan 1, 1 X 300 MW Imported Coal Unit	3-91
3.39	1991 Plans 2 and 2A, 1 X 600 MW Imported Coal Unit	3-92
3.40	1993 Plan 3, 2 X 600 MW Imported Coal Unit	3-93
3.41	1993 Plan 4, 2 X 600 MW Imported Coal Unit	3-94
3.42	Imported Coal 220 kV Substation, Plan 1	3-95
3.43	Imported Coal 220 kV Substation, Plan 2	3-96
3.44	Imported Coal 220 kV Substation, Plan 2A	3-97
3.45	Imported Coal 220 kV Substation, Plan 3	3-98
3.46	Imported Coal 500/220 kV Substation, Plan 4	3-99
3.47	Conceptual KESC 220 kV Substation with Connections to Import Coal Plant, Plan 1	3-100
3.48	Conceptual KESC 220 kV Substation with Connections to Import Coal Plant, Plans 2 and 2A and Plan 4	3-101
3.49	Conceptual KESC 220 kV Substation with Connections to Import Coal Plant, Plan 3	3-102
3.50	Jamshoro 500/220 kV Substation, Plans 1 and 2	3-103
3.51	Jamshoro 500/220 kV Substation, Plan 2A	3-104
3.52	Jamshoro 500/220 kV Substation, Plan 3	3-105

LIST OF EXHIBITS
(Continued)

No.		Page
3.53	Jamshoro 500/220 kV Substation, Plan 4	3-106
3.54	Capital Costs of Imported Coal Alternative Transmission Plans	3-107
3.55	Economic Comparison of Imported Coal Transmission Alternatives	3-108
3.56	Computation of Transmission Losses From Import Coal Plant to Jamshoro	3-109
3.57	Plant and Transmission Capital Costs, Comparison of Lakhra Alternatives	3-110
3.58	Plant and Transmission Capital Cost, Comparison of Lakhra Alternative, First Unit Only	3-111
3.59	Lakhra and Imported Coal Project Comparisons	3-112
3.60	Lakhra and Imported Coal Comparative Parameters, July 1985 Dollars	3-113
3.61	Diversified Maximum Demand at Generation Level (M)	3-114
3.62	Energy Requirement at Generation Level (GWH)	3-115
3.63	System Load Factor	3-116
3.64	Second Series of WASP-3 Computer Studies Generation Expansion Program with the Cost of 5100 Btu/lb Lakhra Coal Equal to $30.50/MT (1081 ¢/KCAL X 10^6)	3-117
3.65	Lakhra or Khanot 500 kV Substation for Two 350 MW Units	3-119
3.66	Capital Costs of Lakhra Alternative Transmission Plans for Two 350 MW Units	3-120
3.67	Plant and Transmission Capital Cost Comparison of Lakhra Alternatives for Two 350 MW Units Year of Expenditure Dollars	3-121

LAKHRA POWER FEASIBILITY STUDY

SPECIFICATION M-5

FEEDWATER HEATERS

LPS/B1569/D3

SPECIFICATION M-5

FEEDWATER HEATERS

TABLE OF CONTENTS

Item	Title	Page
1.0	DESCRIPTION OF WORK	1
2.0	WORK INCLUDED	1
3.0	WORK NOT INCLUDED	2
4.0	APPLICABLE CODES, STANDARDS, AND REGULATORY REQUIREMENTS	2
5.0	SUPPLEMENTAL DATA	3
6.0	VENDOR DATA	3
7.0	DESIGN REQUIREMENTS	5
8.0	PERFORMANCE REQUIREMENTS	7
9.0	MATERIAL REQUIREMENTS	7
10.0	FABRICATION AND ASSEMBLY REQUIREMENTS	7
11.0	INSTALLATION REQUIREMENTS (NONE)	10
12.0	PERSONNEL REQUIREMENTS	10
13.0	INSPECTIONS AND TESTS	10
14.0	CLEANING, CORROSION PROTECTION, AND COATING	10
15.0	MARKING AND IDENTIFICATION	11
16.0	PACKAGING, SHIPPING, AND STORAGE	12
17.0	ACCEPTANCE CRITERIA	13

SPECIFICATION M-5

FEEDWATER HEATERS

TABLE OF CONTENTS
(Continued)

ATTACHMENTS

1. Drawings

2. Water Chemistry (1 Page)

3. Feedwater Heater Specification sheet (3 Pages)

4. Heat Balance

5. Equipment Data Form (9 Pages)

6. Specifications Exceptions Form (1 Page)

LAKHRA POWER FEASIBILITY STUDY

SPECIFICATION M-5

FEEDWATER HEATERS

1.0 DESCRIPTION OF WORK

The Work to be performed shall include designing, furnishing of materials and components, fabricating, delivering twelve (12) feedwater heaters to the jobsite, providing assistance during startup and initial operation, and conducting acceptance testing of the feedwater heaters in accordance with the requirements of this Specification. The heaters will be installed at two 350 MW power plants for the Water and Power Development Authority (WAPDA) to be located in Pakistan.

2.0 WORK INCLUDED

The equipment, material, and services to be supplied by the Vendor (for each generating unit) shall include at least the following:

a. Four closed, low-pressure, horizontal feedwater heaters.

b. Two closed, high-pressure, horizontal feedwater heaters.

c. Channel and shell side relief and safety valves as specified herein.

d. Heater supports, including roller supports, for those heaters designated for shell removal.

e. Liquid level indicators with shutoff valves.

f. Connections for level controls, gage glasses, pressure and temperature instrumentation, vents and drains, inspection ports and channel manways as required.

g. Insulation clips as specified herein.

h. Design criteria for foundations and anchor bolts. Complete details shall be submitted by the Vendor upon award of a Contract.

i. Services of a qualified technical representative during installation and startup of the equipment.

j. Any special tools required for maintenance.

3.0 WORK NOT INCLUDED

The following items are not included in the requirements of this section but will be accomplished by others:

a. Connecting piping.

b. Level control system.

c. Anchor bolts and foundations, including sole plates, and roller rails.

d. Unloading and field erection.

e. Insulation and lagging, except as specified herein.

4.0 APPLICABLE CODES, STANDARDS, AND REGULATORY REQUIREMENTS

Design, materials, manufacture, installation, examination, testing, inspection, and documentation shall conform to the applicable portion of the following specifications, codes, and standards, including case rulings, interpretations, and addenda as applicable and in force at the time of issue of this Specification.

a. American National Standards Institute (ANSI) B 16.5 (latest edition) Steel Pipe Flanged, Flanged Valves and Fittings.

b. American Society of Mechanical Engineers (ASME) Boiler and Pressure Vessel Code:

   1. Section V (latest edition), "Nondestructive Examination."

   2. Section VIII (latest edition), "Pressure Vessels," Division 1.

   3. Section IX (latest edition), "Welding and Brazing Qualifications."

c. American Society for Testing and Materials (ASTM):

   1. A 688, "Welded Austenitic Stainless Steel Feedwater Heater Tubes.".

2. A 450, "Carbon Ferritic Alloy and Austenitic Alloy Steel Tubes."

3. E 309, "Recent Practice for Eddy-Current Examination of Steel Tubular Products Using Magnetic Saturation."

d. Heat Exchange Institute (HEI):

Standards for Closed Feedwater Heaters (latest edition).

5.0 SUPPLEMENTAL DATA

The documents listed on the contents page as attachments are applicable to the Work, to the extent specified herein.

6.0 VENDOR DATA

6.1 Vendor data shall be furnished in accordance with the requirements indicated on the attached Vendor Data Requirements and Submittal Schedule.

6.2 Vendor shall furnish Certified Vendor Drawings, and include a list of drawings by category, such as general arrangement, foundation data, and electrical connection. If titles of the Certified Vendor Drawings are unknown, bidder shall submit the estimated number of drawings he will submit in each category.

6.3 The Vendor shall provide (No.) copies of an instruction book covering all equipment being furnished. The instruction book shall have hard front and back covers and have proper identification on the front cover as to contents.

6.4 Instruction books are not considered design manuals, and if any discrepancies arise between the Vendor's drawings and instruction books, or items omitted from the drawings which are contained in the instruction book recommendations, the Vendor shall amend the instruction books or shall modify the installation at his own expense, whichever is deemed by the Owner as giving the most proper and operative final installation.

6.5 The following items are requested to be furnished with the bid. Data which are representative rather than exact shall be identified as such:

a. Maximum nozzle forces and moments that each heater is capable of withstanding.

b. Recommended arrangement for operating and startup vents.

25

c. All equipment support loads, and description of proposed support hardware.

d. Statement of any temperature transient limitations.

e. Statement of any temperature or entrance velocity limitations.

f. Statement of maximum NDT temperature for any component quoted.

g. Any special operating requirements, viz. bypassing, shall be submitted with the Proposal.

h. Statement of maximum nozzle stress that the equipment is capable of withstanding. The capability of the feedwater heaters to accept piping forces and moments is an inherent part of usual power plant design practice, and except where limits are quoted, the feedwater heaters shall accommodate all such forces and moments without Contract price adjustment.

6.6 QA/QC REQUIREMENTS

6.6.1 The Vendor and his subvendor(s) shall have in effect in their shops at all times an inspection, testing, and documentation program that will insure that the equipment furnished under this Specification meets, in all respects, the requirements specified herein.

6.6.2 The Vendor shall submit a copy of his quality control manual to the Engineer. The following items are requested to be furnished:

a. Outline drawing of each piece of equipment, including material list using ASTM designations.

b. Description of fabrication details.

c. Description of welding procedures to be used to assure ductile tube-to-tube sheet welds where welded tube joints are specified.

d. Copy of Vendor's tubing specification including a description of the cold work, heat treating, and pickling procedures to be employed, and a list of potential tubing suppliers. The Owner reserves the final right of approval of the tube supplier.

e. A description of the procedures to be used to protect the tubes during handling and storage prior to installation in the heaters.

6.7 PERFORMANCE TEST REPORTS AND CERTIFICATIONS

The following performance reports and certifications shall be submitted to the Owner prior to acceptance of the Work:

6.7.1 Certified copies of all shop test data shall be forwarded to the Engineer for later distribution to the Owner.

6.7.2 The Vendor shall furnish procedures and instructions for all field installation and all required startup tests and instruction books for the equipment being furnished.

6.8 SPECIAL TOOLS AND SPARE PARTS

The Vendor shall supply the following:

6.8.1 One set of any special tools required to operate and maintain his equipment, including tube expanding devices for each size tube, and one set of any special tools required to remove and install manway cover. All tools shall be identified by name and number, and this number shall appear on drawings and instructions to indicate the application of the tools furnished and to permit the ordering of replacement tools.

6.8.2 One set of lifting slings or cradles for removal of tube bundles from heaters designated for bundle removal.

6.8.3 The Vendor shall supply, with his proposal, pricing for 1 and 5 year supplies of spare parts.

7.0 DESIGN REQUIREMENTS

7.1 Heaters shall be of the horizontal "U" tube design with integral drain cooling zones, unless this Specification states otherwise.

7.2 The high-pressure heaters shall also be equipped with integral desuperheating zones.

7.3 Integral drain cooling zones shall be designed to allow satisfactory operation with a minimum of 50mm (2-inch) water level variation of condensate in the heater shell for horizontal heaters.

7.4 Heater channels (except for flat plate bolted cover type) shall be equipped with 450mm (18-inch) ID circular manways, or elliptical manways with a minimum of 450mm (18-inch) ID major axis.

7.5 Impingement baffles of stainless steel shall be provided opposite all nozzle connections where impingement of steam or water might cause erosion of tubes. Baffles shall be designed to preclude transmission of vibration to the tubes. Baffling shall also be designed to protect the tube bundle from rebound.

7.6 A shell corrosion allowance of 1.6mm (1/16 inch) minimum shall be used.

7.7 Adequate venting arrangement for removal of noncondensable gases shall be provided. Air vent limiting orifices for each heater shall be provided and will be installed in the external piping by the Owner.

7.8 All condenser neck-mounted heaters shall be equipped with stainless steel antiflash baffling capable of confining flashed vapor along the entire free drains surface.

7.9 Externally mounted heaters shall be provided with insulation clips. Cylindrical surfaces shall be equipped with insulation clips spaced at 90-degree intervals, arranged along the long axis of the heater at 450mm (18-inch) intervals. Clips may be threaded 7mm (1/4-inch) studs, flat tabs with hole, or 7mm (1/4-inch) machine nuts. Irregular surfaces of heaters, such as the shell end or forged heads, shall be similarly equipped with insulation attachment devices tackwelded at two points. Spacing shall be approximately 300mm (12 inches).

7.10 Lifting and pulling lugs shall be furnished with each heater. All lifting lugs shall be adequately sized for the full empty weight of the heater.

7.11 All internal tube side heater surfaces will be chemically cleaned in the field prior to operation. Expected cleaning solution will be (later). The heaters shall be designed for exposure to this solution, ease of flushing, and cleanout of residue.

7.12 The maximum water velocity through the tube shall not exceed 3.05 m/s (10 ft/sec) in accordance with the Heat Exchanger Institute Standard at the normal full load operating conditions.

7.13 For the purpose of design, the Vendor shall assume that the following inlet temperature changes occur:

a. Low-pressure heaters:

From normal inlet temperature to 27°C (80°F) instantaneously.

b. Intermediate and high-pressure heaters:

From normal maximum inlet temperature to 104°C (220°F) instantaneously.

c. The number of such occurrences is 40 times during the 40-year station design life.

8.0 PERFORMANCE REQUIREMENTS

8.1 The heaters shall be guaranteed to perform in accordance with Item I, "Design Operating Conditions" parts B and D, of the attached Feedwater Design Specification Sheet.

8.2 The heaters shall be designed to operate at all "Alternate Operating Condition(s)" as specified on the attached Feedwater Heater Specification Sheet without undue noise or vibration and without physical damage to the equipment.

8.3 THERMAL TRANSIENTS

The feedwater heaters shall be designed to operate efficiently when subjected to the normal temperature variations inherent in the steam power plants due to load changes, startups, and shutdowns. The unit(s) will be designed to accept a step load change of 10 percent and a ramp load change of 5 percent per minute, also transients from turbine or steam generator unit trips.

9.0 MATERIAL REQUIREMENTS

Except where otherwise specified herein, materials of construction shall be the Vendor's standard which has proven satisfactory in similar service in the past and meets applicable code requirements.

10.0 FABRICATION AND ASSEMBLY REQUIREMENTS

The feedwater heaters shall be fabricated and assembled in accordance with the following requirements:

10.1 MOUNTING

10.1.1 Heaters specified for bundle removal shall be equipped with any special fittings required to withdraw and handle the bundle when external to the shell.

10.1.2 Heaters specified for shell removal shall be equipped with roller supports to facilitate withdrawing the shell and also to accommodate normal thermal movements.

10.1.3 Heaters specified for mounting in the condenser neck shall be provided with welding rollers and plates suitable for welding to the main condenser necks.

10.2 TUBES, TUBE SHEETS, AND SUPPORT PLATES

10.2.1 Tubes

a. Minimum allowable tube size shall be 15mm (1/2 inch) od.

b. Tubes for L.P. heaters 1-4 shall be rolled into the tube sheets and shall be fabricated of welded austenitic stainless steel, to ASTM A 688 Grade TP 304. Annealing of the U-bends is required.

c. Tubes for H.P. heaters 1 and 2 shall be rolled into and welded to the tube sheet and shall be fabricated of welded austenitic stainless steel, to ASTM A 688,Grade TP 304. U-bends shall be annealed.

10.2.2 Tube Sheets

a. Tube sheets for heaters in which welded tubes are specified shall be provided with cladding of material compatible with the tube material for welding. The cladding shall be a minimum of 7mm (1/4 inch) thick after finished machining. The tube sheet, if forged, shall have been machined sufficiently to remove any "skin" effect prior to applying the cladding material.

b. Welding or rolling procedures or both, and joint configuration are subject to approval by the Engineer.

10.2.3 Tube Support Plates

a. Tube support plates shall be spaced to prevent vibration-induced damage to tubes during all operating conditions.

b. Support plate tube holes shall be deburred, with edges "broken" (or slightly chamfered) on both sides.

c. Larger diameter tube bundles shall be provided with support plates, or their equivalent, at the U-bends.

10.3 CONNECTIONS

10.3.1 In addition to the normal connections provided for steam inlet, drains, vents, feedwater inlet and outlet, the heaters shall be provided with connections for level controls, level alarms and indicators, chemical cleaning, pressure and temperature

instrumentation, relief valves, and nitrogen blanketing connections.

10.3.2 All connections for heaters except for the relief valves shall be welded. Connections 25mm (2-1/2 inches) and larger shall be butt welded unless this Specification states otherwise. Connections 50mm (2 inches) and smaller shall be socket welded. All welded connections shall be in accordance with attached Drawings SKA-82975, Sheets 1-3. All connections shall be oriented radially, with the exception of the drain cooler outlet connection.

10.3.3 The shell side relief valve connection shall be flanged. The tube side relief valve connection shall be screwed.

10.3.4 All incoming drain connections shall enter the heater shell radially at the U-bend end, beyond the tube bundle.

10.3.5 A full capacity drain connection from the condensing zone (bypassing the drain cooler section) shall be provided on heaters LP1 and LP2.

10.4 ACCESSORIES

10.4.1 Shell side relief valves

a. Shell side relief valves shall be provided for each heater with a discharge capacity equal to 10 percent of the feed-water flow for compressed liquid at design pressure and temperature. Relieving capacity shall be based on 10 percent accumulation in all cases. Valves shall be of Consolidated, Crosby, or Lonergan manufacture.

NOTE: Low-pressure heaters 1 and 2 located on the condenser neck do not require shell side relief valves.

b. Valves shall have cast steel bodies with stainless steel trim.

10.4.2 Tube side relief valves

a. Tube side relief valves of the sentinel type shall be provided for each heater. Valves shall be of Consolidated, Crosby, or Lonergan manufacture.

b. Valves shall have cast steel bodies, stainless steel trim, and spring material of carbon steel or tungsten steel depending on the particular temperature conditions. Minimum size shall be 25mm (1-inch) NPT.

10.4.3 Gage glasses for heaters with shell side design pressures of 2413 kPa (350 psig) or less shall be Jerguson, or equal, reflect type with valves. Valves shall be of the offset type with a ball check valve to limit blowout. Gage glasses shall be provided with illuminators.

10.4.4 Gage glasses for heaters with shell side design pressures above 2413 kPa (350 psig) shall be Yarway multiport type or equal. These shall be furnished as complete assemblies. Gauge glasses shall be provided with illuminators.

11.0 INSTALLATION REQUIREMENTS

None

12.0 PERSONNEL REQUIREMENTS

The Vendor shall employ personnel qualified to perform the work in accordance with the Vendor's QA/QC Program.

All welders shall be qualified under the ASME Boiler Pressure Vessel Code, Section IX.

13.0 INSPECTIONS AND TESTS

The following inspections and tests shall be performed:

13.1 The Owner and/or his representative shall have the right to inspect and verify all phases of manufacture and testing of all equipment covered by this Specification.

13.2 TESTING

13.2.1 A halogen leak test shall be performed on the shell side of the unit in accordance with ASME Section V, Article 10, prior to any wetting or hydrostatic testing of the shell side.

13.2.2 All heaters shall be hydrostatically tested by the Vendor in accordance with the ASME Code with demineralized water.

13.2.3 All tubes shall be eddy-current tested by the tube manufacturer in accordance with Supplementary Requirement S1 of ASTM A 688. A test report shall be furnished in accordance with Supplementary Requirement S3 of ASTM A 688.

14.0 CLEANING, CORROSION PROTECTION, AND COATING

14.1 All outside unmachined surfaces shall be given one shop coat of Vendor's standard primer. Dry film thickness of such paint shall be a minimum of .05mm (2 mils).

14.2 All exposed machined surfaces shall be coated and protected to prevent corrosion during shipment and storage. Details are subject to approval by the Engineer.

14.3 The heaters shall be sealed and protected internally during shipment and storage. To facilitate such protection, the heaters shall be pressurized to 34.5 kPa (5 psig) with dry Nitrogen during shipment & storage. Pressure gages to indicate N_2 pressure and valves to add in N_2 when necessary shall be provided.

15.0 MARKING AND IDENTIFICATION

15.1 Each package, skid, box and crate shall be marked on the outside with the following information so that it is readily visible:

a. (Owner's name)
(Project identification)
(Address)
(City, state, zip code)

b. Purchase Order number:

c. Weight:

d. Equipment Nos. as applicable:

15.2 Each unit shall be identified with a tag number. The number shall be permanently imprinted with at least 5mm (3/16") high letters on a 22-gage stainless steel tag. The tag shall be attached to the enclosure with pins of a similar material.

15.3 Each unit shall have a permanently secured data plate made from at least 22-gage stainless steel, permanently imprinted with 5mm (3/16") high letters, and containing the following information:

a. Manufacturer's name and address:

b. Model Number:

c. Serial Number:

d. Date of Manufacture:

e. Duty:

f. Weight:

15.4 The data plate shall be located where it is readily visible and shall be securely attached with pins of a material similar to the plate.

15.5 Equipment item numbers shall be utilized by the Vendor in designating equipment. Numbers so assigned by the Vendor may be reassigned at the option of the Engineer.

15.6 Items furnished under these specifications, but not identified herein, shall have tags inscribed as directed by the Engineer.

16.0 PACKAGING, SHIPPING, AND STORAGE

16.1 Equipment or piping that may have been hydrostatically tested shall be checked to insure that all water has been drained from the unit prior to placing equipment in storage. After any equipment is in storage, temporary wood or steel plate covers shall be provided over flanges to prevent admittance of water to the unit, and the Vendor shall be responsible for any water damage or damage due to improper closure of the unit, equipment, and associated piping until such time as it has been accepted by the Owner.

16.2 The heaters shall be packaged with a waterproof enclosure so that water, salt spray, dust, dirt, and other forms of contamination do not penetrate to the item. Items subject to detrimental corrosion, either internal or external, shall be suitably protected.

16.3 Following hydrotesting of the heater shell, the heater shall be heated and a vacuum applied to the shell to remove all moisture. Following vacuum drying of the heater a blanket of dry nitrogen shall be applied to the heater for protection during shipment and storage.

16.4 Heaters shall be shipped with nitrogen bottles and regulators, connected to each heater to maintain a 68.9 kPa (10 psig) blanket pressure during transit. Pressure gages shall be installed on both shell and tube sides of the heater to verify the integrity of the nitrogen blanket.

16.5 Heater shells shall be clearly stenciled to warn that the vessel is sealed with nitrogen under pressure and should not be opened.

16.6 The weight and lifting points or center of gravity shall be clearly marked on each item.

16.7 Shipment shall be by truck unless the Owner and the Vendor agree otherwise.

16.8 STORAGE

Unless the Owner and the Vendor agree otherwise, storage will be outdoors. Weather-resistant covers and adequate blocking will be provided if required. The nitrogen blanket as specified in paragraphs 16.3 and 4 will be maintained by the Owner during storage.

17.0 ACCEPTANCE CRITERIA

17.1 MANUFACTURING ERRORS

Equipment and materials shall be complete in all respects within the limits herein specified. Manufacturing errors and omissions, required to be corrected in the field. shall be performed under the direction of and at the expense of the Vendor. If the error requires shipment back to the factory, the disassembly, handling, shipping, and reassembly shall be at the Vendor's expense.

17.2 Instruction books shall be distributed prior to equipment being shipped.

17.3 Acceptance criteria shall be the Vendor's standard which has proven satisfactory in the past and which meets the applicable code requirements. Acceptance criteria shall be subject to Engineer approval.

ATTACHMENT 1

LIST OF DRAWINGS

The following Drawings set forth the location and extent of the Work specified herein:

Drawing No.	Sheet No.	Title
SKA-82975	1	Feedwater Heater LP1 and LP2
SKA-82975	2	Feedwater Heater LP3 and LP4
SKA-82975	3	Feedwater Heater HP1 and HP2

SAMPLE

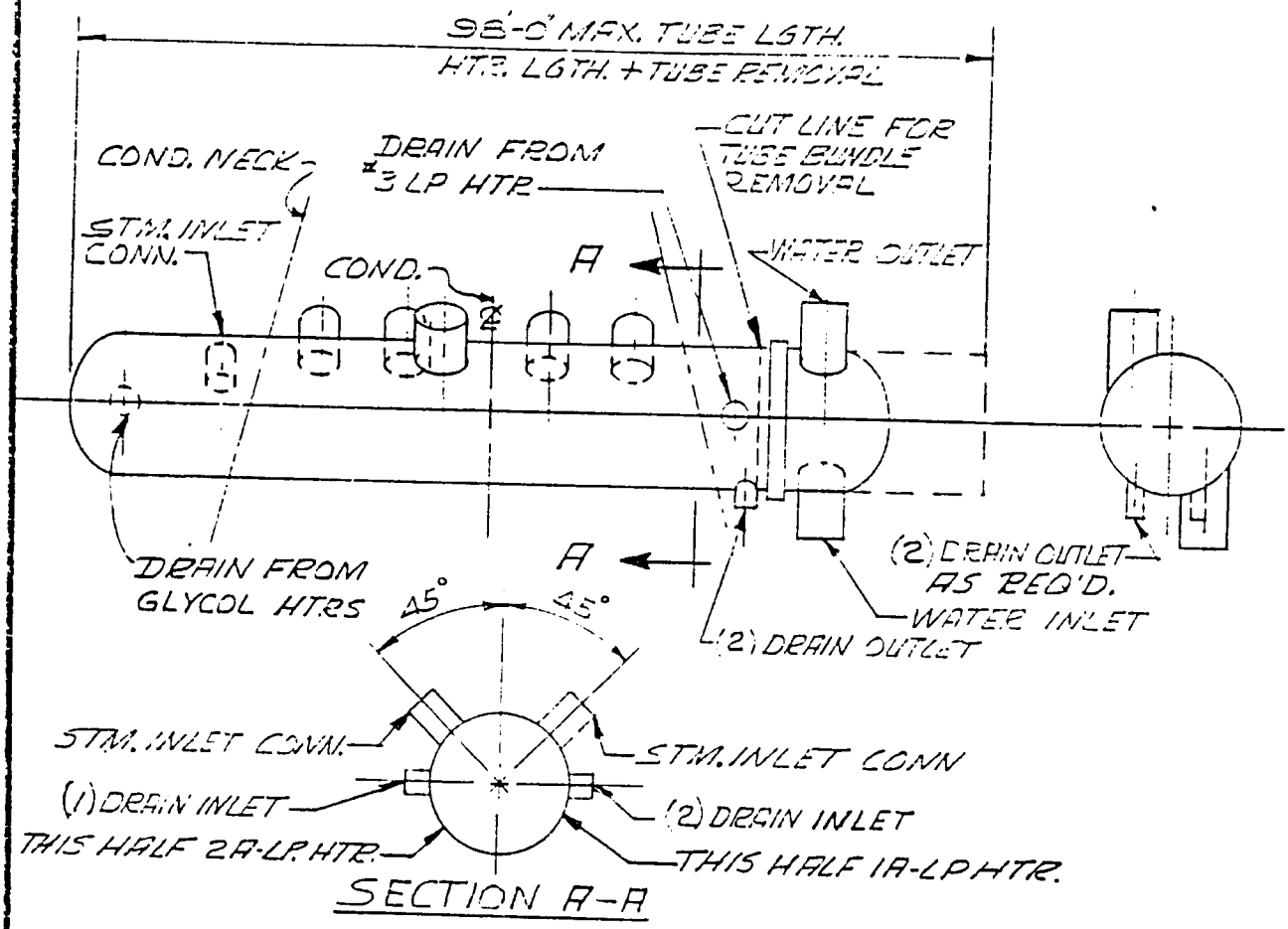

NOTE:

NOZZLE CONN. LGTH. TO SUIT EXCEPT WHERE NOTED
LP-1 & LP-2 HEATERS ARE
FOR MOUNTING IN THE CONDENSER NECK
THREE(3) IDENTICAL HEATER REQUIRED.
ONE(1) SHELL TO ENCLOSE 1A-LP HTR. & 2A-LP HTR.
ONE 1 SHELL TO ENCLOSE 1B-LP HTR. & 2B-LP HTR.
ONE 1 SHELL TO ENCLOSE 1C-LP HTR. & 2C-LP HTR.
MARK 1A-LP + 2A-LP — LATER
1B-LP & 2B-LP — LATER
1C-LP & 2C-LP — LATER

WARGER

SPECIFICATION
FEEDWATER HTR. LP-1 & LP-2
SKA-82975 SH 1

INSPD BY				PRINTS SENT OUT	AP		

SAMPLE

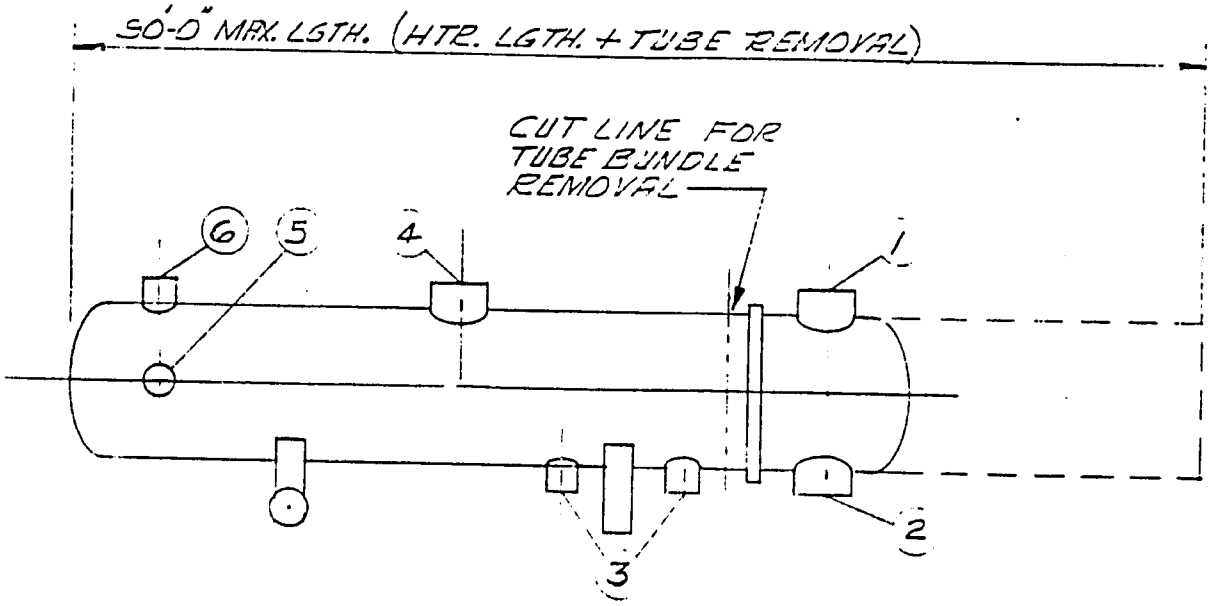

MARK No	HTR.	1 WTR. OUT	2 WTR. IN	3 DRAIN OUT	4 STM. IN	5 DRAIN IN	6 STM. IN
LATER	3 L.P.	*	*	*	*	*	NONE
LATER	4 L.P.	*	*	*	*	*	NONE

NOTE:

LP3 & LP4 HEATERS ARE SINGLE STREAM FULL SIZE HEATERS

* INFORMATION TO BE SUPPLIED BY VENDOR

L. YARGER

APP

DATE

OWNER

TITLE

SPECIFICATION FEEDWATER HTR. LP3+4

AT OFFICES OF COMMONWEALTH ASSOCIATES INC

JOB NO.

DWG NO SKA-82975 SH 2 REV

INSP'D BY					PRINTS SENT OUT	AP				

SAMPLE

60'-0" MAX. LGTH. HTR. LGTH. + TUBE REMOVAL HTRS 1
71'-0" MAX. LGTH. HTR. LGTH. + TUBE REMOVAL HTRS 2

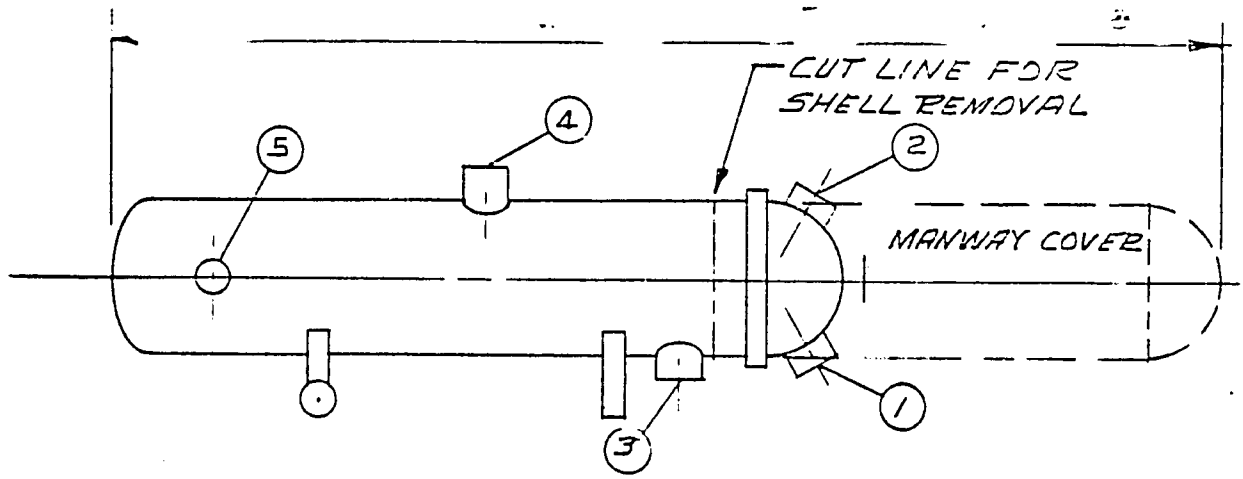

MARK No	HEATER	WATER IN	WATER OUT	DRAIN OUT	STM IN	DRAIN IN
LATER	6A	*	*	*	*	*
LATER	6B	*	*	*	*	*
LATER	7A	*	*	*	*	*
LATER	7B	*	*	*	*	*
LATER	8A	*	*	*	*	NONE
LATER	8B	*	*	*	*	NONE

NOTE:

HTRS6, HTRS7 + HTRS8 ARE ONE HALF (1/2) SIZE DUAL STREAM HEATERS.

* INFORMATION TO BE SUPPLIED BY VENDOR

AMENDED; 5-28-76

L. HARGER

OWNER

TITLE
SPECIFICATION
FEEDWATER HTRS. HP182

AT OFFICES OF
COMMONWEALTH ASSOCIATES INC.

JOB NO.

DWG NO SKA-82975 SH 3 REV

INSP'D BY

PRINTS SENT OUT

AP

ATTACHMENT 2

WATER CHEMISTRY

pH at 25°C (77°F)	8.9 - 9.2
Maximum dissolved solids, ppm	25
Maximum oxygen as O_2, ppm	0.1
Morpholine, ppm	2 - 6
Hydrazine, ppm	15 - 25
Maximum chlorides as CL-, ppm	1.0
Maximum flourides as F-, ppm	1.0

ATTACHMENT 3

FEEDWATER HEATERS
SPECIFICATION SHEET

I. Design Operating Condition

A. Tube Side

	LP1	LP2	LP3	LP4	HP1	HP2
1. FW or Condensate flow (per shell), tonnes/hr (lb/hr)	1,102.3 (2,430,712)	1,102.3 (2,430,712)	1,102.3 (2,430,712)	1,102.3 (2,430,712)	1,121.2 (2,472,300)	1,121.2 (2,472,300)
2. FW or Condensate TTD, °C (°F)	2.8 (5)	2.8 (5)	2.8 (5)	2.8 (5)	0 (0)	0 (0)
3. FW or Condensate temperature in, °C (°F)	43.1 (109.5)	68.1 (154.6)	94.8 (202.7)	112.5 (234.4)	186.7 (368)	207.8 (406.1)
4. FW or Condensate temperature out, °C (°F)	68.1 (154.6)	94.8 (202.7)	112.4 (234.4)	144.3 (291.8)	207.8 (406.1)	241.3 (466.3)
5. FW or Condensate velocity, max allow, m/s (ft/s)	2.6 (8.5)	2.6 (8.5)	2.6 (8.5)	2.6 (8.5)	2.6 (8.5)	2.6 (8.5)
6. FW or Condensate pressure loss, max allow, kPa (psi)	103.4 (15)	103.4 (15)	103.4 (15)	103.4 (15)	103.4 (15)	103.4 (15)
7. Design pressure, kPa (psig)	4,137 (600)	4,137 (600)	4,137 (600)	4,137 (600)	21,374 (3,100)	21,374 (3,100)
8. Design temperature, °C (°F)	167.2 (333)	167.2 (333)	190.6 (375)	193.3 (380)	240.6 (465)	282.2 (540)

ATTACHMENT 3

FEEDWATER HEATERS
SPECIFICATION SHEET
(Continued)

	LP1	LP2	LP3	LP4	HP1	HP2
9. Operating pressure (@ rating), kPa (psig)	2,654 (385)	2,654 (385)	2,654 (385)	2,654 (385)	15,858 (2,300)	15,858 (2,300)
B. Tubes						
1. Material	S.S.	S.S.	S.S.	S.S.	S.S.	S.S.
2. Specification(s)	A-688 TP 304	A-688 TP 304	A-688 TP 304	A-688 TP 304	A-688 TP 304	A-688 TP 304
C. Shell Side						
1. Extraction steam flow, tonnes/hr (lb/hr)	38.1 (83,973)	47.6 (105,032)	32.8 (72,314)	60.1 (132,612)	45.9 (101,309)	93.2 (205,429)
2. Extraction steam press, kPa (psia)	32.5 (4.71)	93.1 (13.5)	170.3 (24.7)	440.6 (63.9)	1,827 (265)	3,424 (496.6)
3. Extraction steam temp., oC (^{o}F)	71.6 (160.9)	103.8 (218.8)	157.6 (315.7)	255 (491)	437.6 (819.7)	332.9 (631.2)
4. Drains in, source	LP2	LP3	LP4	N.A.	HP2	N.A.
5. Drains in, flow, tonnes/hr (lb/hr)	140.6 (309,958)	92.9 (204,926)	60.1 (132,612)	N.A.	93.2 (205,429)	N.A.

ATTACHMENT 3

FEEDWATER HEATERS
SPECIFICATION SHEET
(Continued)

	LP1	LP2	LP3	LP4	HP1	HP2
6. Drains in, temp, °C (°F)	73.7 (164.6)	100.4 (212.7)	118 (244.4)	N.A.	213.4 (416.1)	N.A.
7. Drains out, flow, tonnes/hr (lb/hr)	182.6 (402,731)	140.6 (309,958)	92.9 (204,926)	60.1 (132,612)	139.1 (306,738)	93.2 (205,429)
8. Drains out, temp, °C (°F)	48.6 (119.5)	73.7 (164.6)	100.4 (212.7)	118 (244.4)	193.3 (380)	213.4 (416.1)
9. Drains cooler approach, °C (°F)	5.6 (10)	5.6 (10)	5.6 (10)	5.6 (10)	5.6 (10)	5.6 (10)
10. Shell design pressure, kPa/kPa Vac (psig/in Hg Vac)	345/101.6 (50/30)	345/101.6 (50/30)	690/101.6 (100/30)	690/101.6 (100/30)	2,172/N.A. (315/N.A.)	4,309/N.A. (625/N.A.)
11. Shell design temp, °C (°F)	293 (560)	271 (520)	354 (670)	327 (620)	221 (430)	260 (500)
12. Shell skirt design temp, °C (°F)	N.A.	N.A.	N.A.	N.A.	482 (900)	366 (690)

GUARANTEED – 11.85 kPa, 3% MU, TC2F

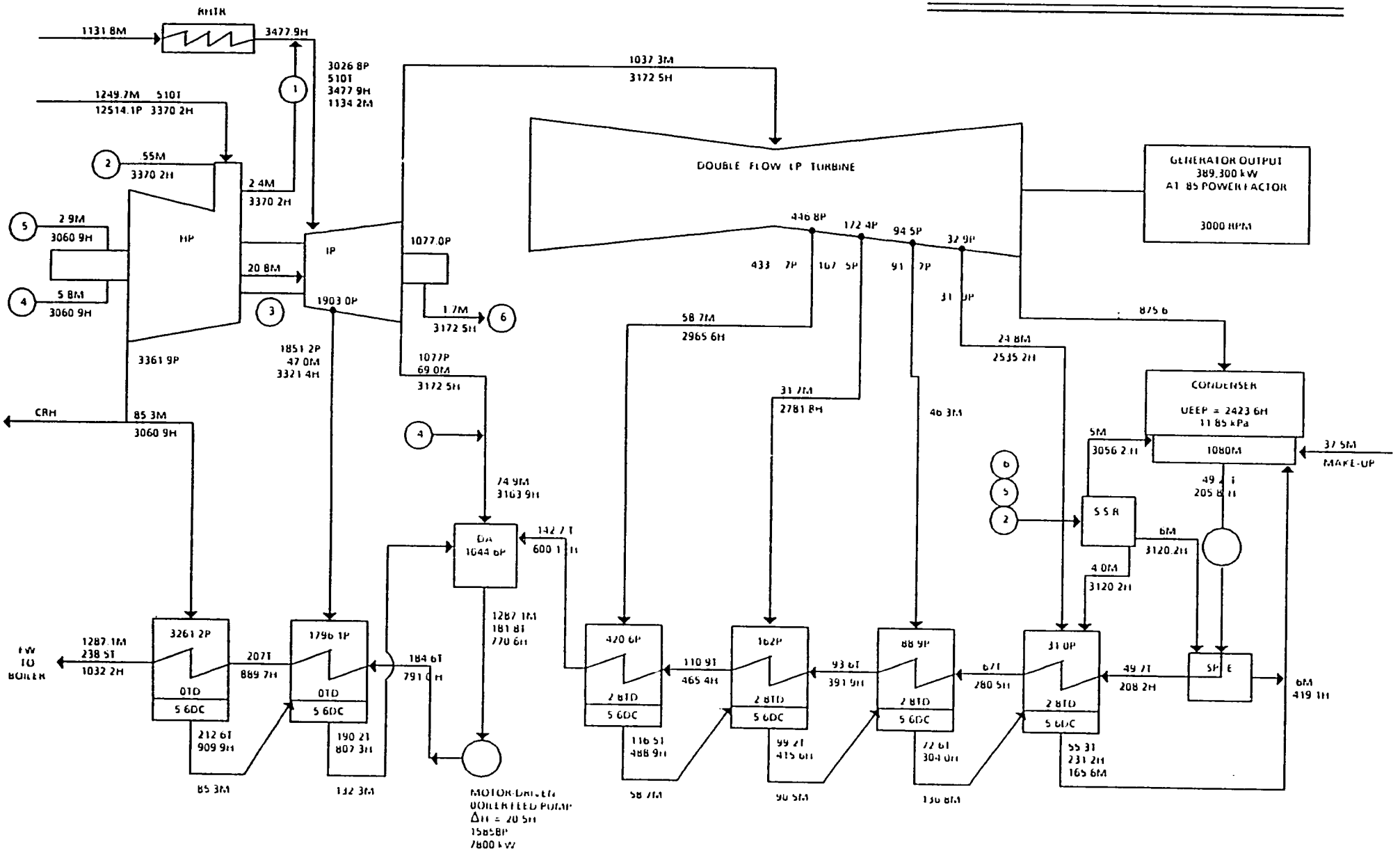

GROSS HEAT RATE = 8717 kj/kWh
(Heat Rate may vary depending on the T/G Vendor Selected)

M – Flow – tonnes/h
P – Pressure – kPa
H – Enthalpy – kj/kg
T – Temperature – °C

LAKHRA POWER PLANT
FEASIBILITY STUDY
TYPICAL PRELIMINARY TURBINE HEAT BALANCE
SI UNITS
G/C II 11/12/85 HB-1

B1619-4/GF#72

VWO – NP – 8.47 kPa, 0.5% MU, TC2F

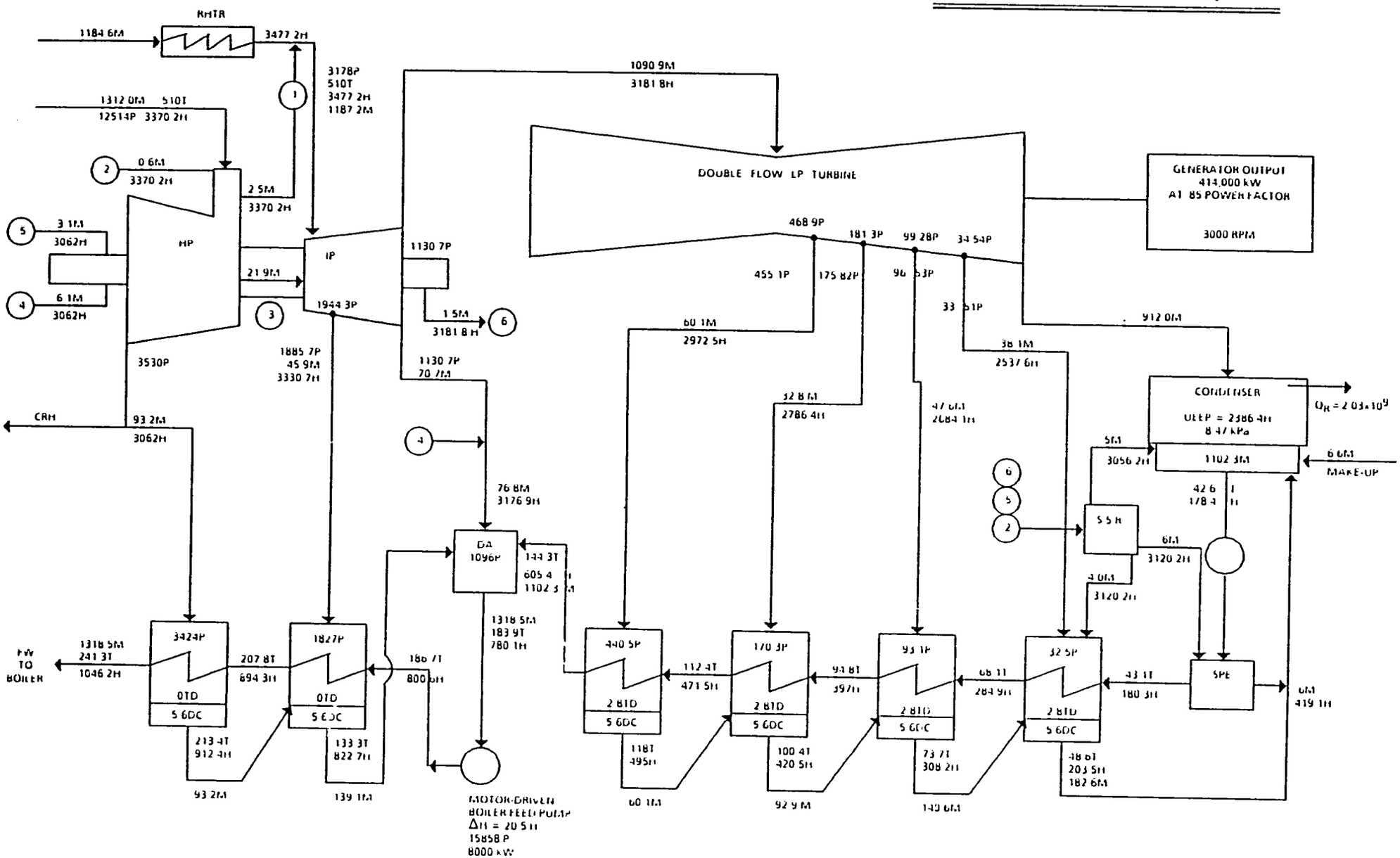

GROSS HEAT RATE = 8554 kj/kWh
(Heat Rate May Vary Depending on T/G Vendor Selected)

M – Flow – tonnes/hr
P – Pressure – kPa
H – Enthalpy – kj/kg
T – Temperature – °C

LAKHRA POWER PLANT
FEASIBILITY STUDY
TYPICAL PRELIMINARY TURBINE HEAT BALANCE
SI UNITS
G/C II 11/12/85 HB-2

B1619-2/GF#72

GUARANTEED – 3.5" HgA, 3% MU, TC2F

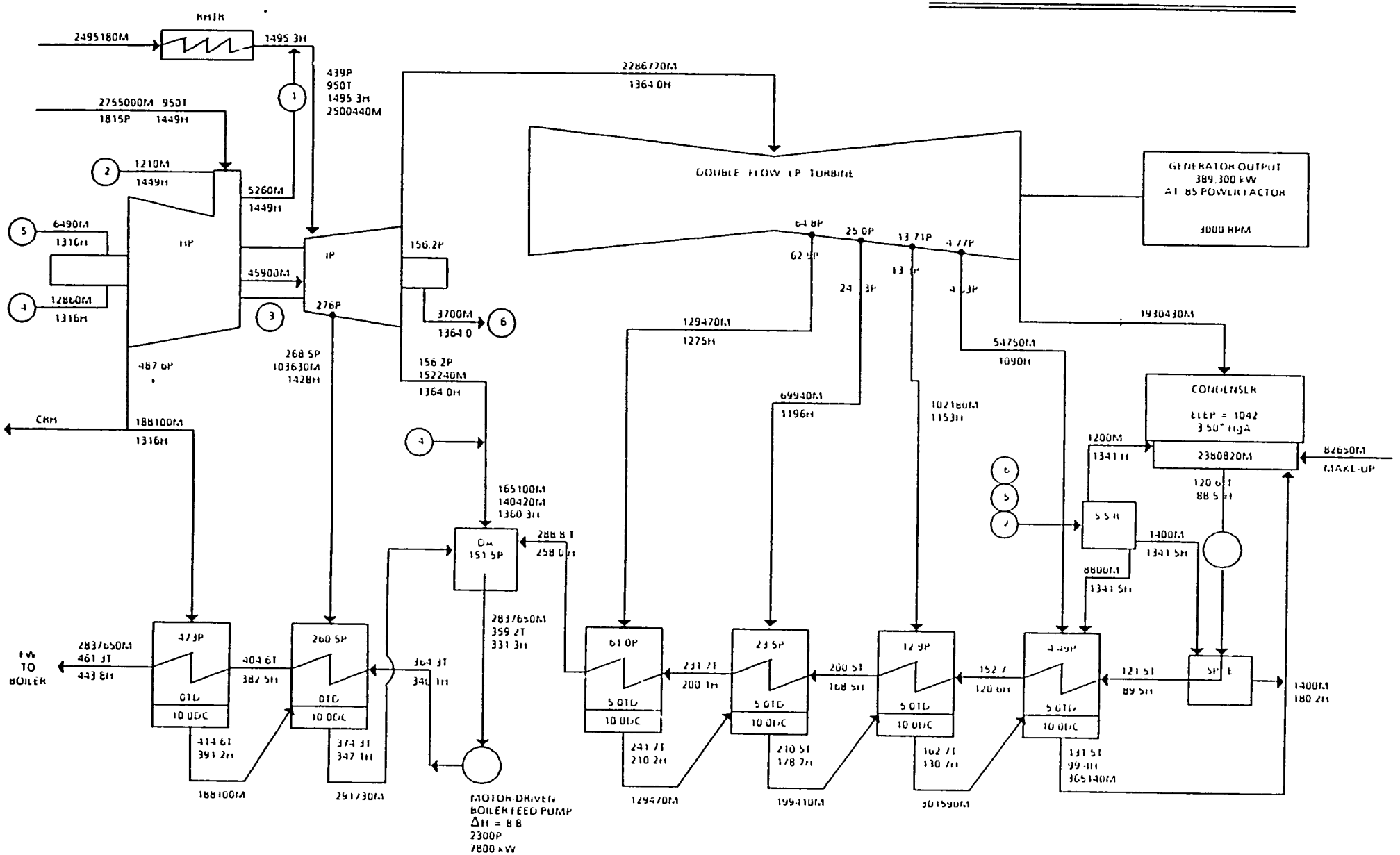

GROSS HEAT RATE = 8263 Btu/kWh
(Heat Rate may vary depending on the T/G Vendor Selected)

M – Flow – lbs/hour
P – Pressure – psia
H – Enthalpy – Btu/lb
T – Temperature – °F

LAKHRA POWER PLANT
FEASIBILITY STUDY
TYPICAL PRELIMINARY TURBINE HEAT BALANCE
ENGLISH UNITS
G/C II 11/12/85 HB-1

B1619-3/GF#72

VWO – NP – 2.5" HgA, 0.5% MU, TC2F

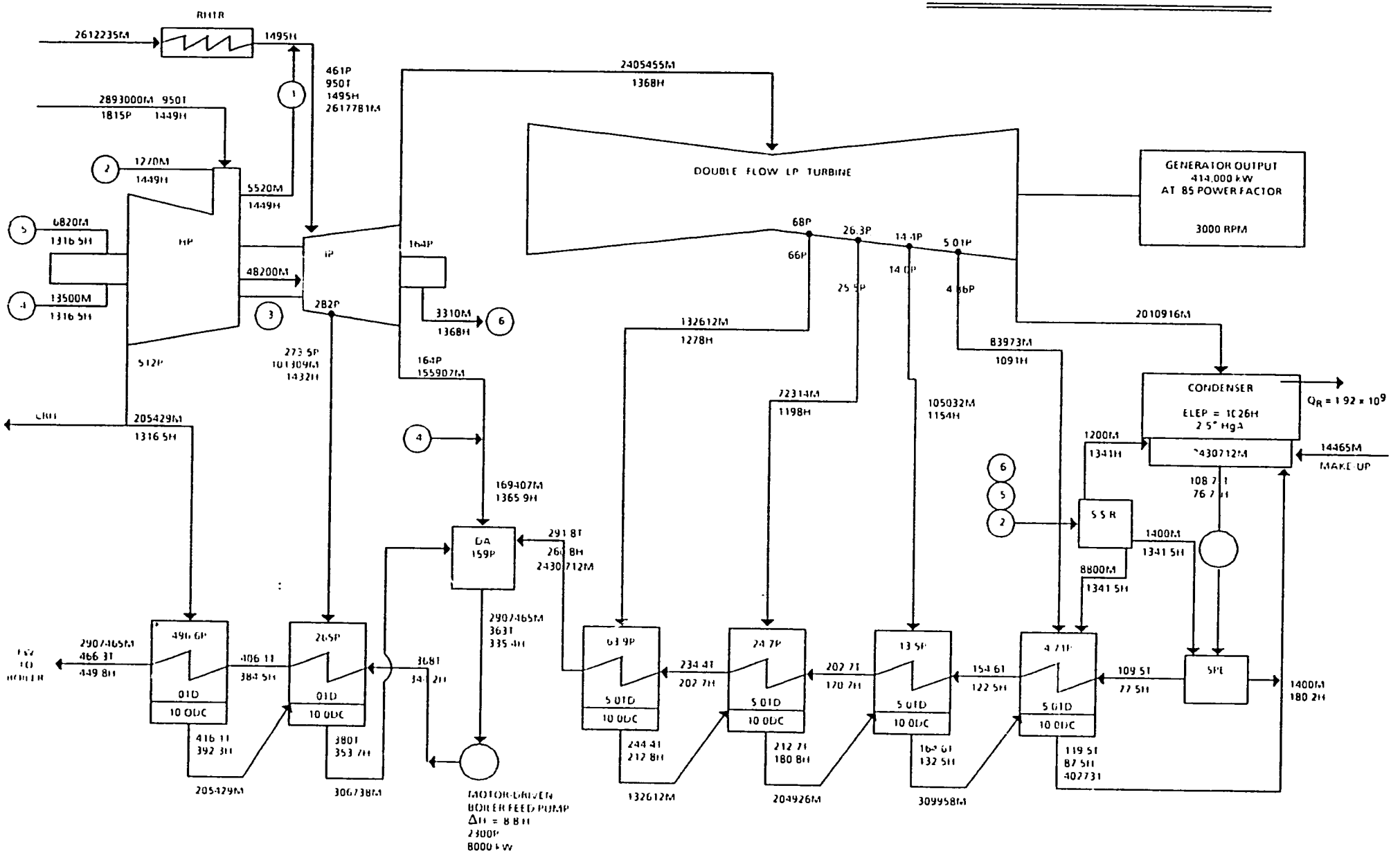

GROSS HEAT RATE = 8108 Btu/kWh
(Heat Rate may vary depending
on the T/G Vendor Selected)

M – Flow – lbs/hour
P – Pressure – psia
H – Enthalpy – Btu/lb
T – Temperature – ° F

LAKHRA POWER PLANT
FEASIBILITY STUDY
TYPICAL PRELIMINARY TURBINE HEAT BALANCE
ENGLISH UNITS
G/C II 11/12/85 HB-2

1619-1/GF#72

ATTACHMENT 5

EQUIPMENT DATA

GILBERT/COMMONWEALTH HEATER NO.

One copy of this form shall be returned with each bid, for each heater with all blanks filled in.

_____
(BIDDER'S NAME)

_____
(MANUFACTURER'S NAME)

_____
(QUOTATION NUMBER)

1. Performance Data:

a. Feedwater flow, tonnes/hr (lb/hr) _____

b. Feedwater temperature at inlet, °C (°F) _____

c. Feedwater temperature at outlet, °C (°F) _____

d. Extraction to be condensed, tonnes/hr (lb/hr) _____

e. Extraction enthalpy, kj/kg (Btu/lb) _____

f. Saturation temperature, °C (°F) _____

g. Heater pressure, kPa (psig) _____

h. Terminal difference, °C (°F) _____

i. Drains cooler approach, °C (°F) _____

j. Tube side velocity, m/s (ft/s) at avg. temp. _____

ATTACHMENT 5

EQUIPMENT DATA
(Continued)

GILBERT/COMMONWEALTH HEATER NO.

_____
(BIDDER'S NAME)

k. Drain flow into heater from higher pressure heater, tonnes/hr (lb/hr) _____

l. Temperature of drains in, °C (°F) _____

m. Drains out, tonnes/hr (lb/hr) _____

n. Temperature of drains out, °C (°F) _____

o. Log mean temperature difference:

(1) Condensing zone, °C (°F) _____

(2) Subcooling zone (corrected for reheat), °C (°F) _____

(3) Desuperheating zone, °C (°F) _____

p. Coefficient of heat transfer:

(1) Condensing zone, kj/hr/m^2 °C (Btu/hr/ft^2 °F) _____

(2) Subcooling zone, kj/hr/m^2 °C (Btu/hr/ft^2 °F) _____

ATTACHMENT 5

EQUIPMENT DATA
(Continued)

GILBERT/COMMONWEALTH HEATER NO.

(BIDDER'S NAME)

(3) Desuperheating zone, kj/hr/m^2 ^oC (Btu/hr/ft^2 ^oF) _____

q. Tube side pressure drop at average temperature including inlet and outlet losses, kPa (psi) _____

r. Shell side pressure drop through subcooling zone at 15.5^oC (60^oF), kPa (psi) _____

s. Heater duty:

(1) Total, kj/hr (Btu/hr) _____

(2) Condensing zone, kj/hr (Btu/hr) _____

(3) Subcooling zone kj/hr (Btu/hr) _____

(4) Desuperheating zone kj/hr (Btu/hr) _____

2. Construction and Dimensions:

a. Heater surface:

(1) Total heater surface m^2 (ft^2) _____

(2) Effective surface in condensing zone m^2 (ft^2) _____

ATTACHMENT 5

EQUIPMENT DATA
(Continued)

GILBERT/COMMONWEALTH HEATER NO.

(BIDDER'S NAME)

(3) Effective surface in subcooling zone m^2 (ft^2) _____

(4) Desuperheating zone surface, m^2 (ft^2) _____

(5) Lengths:

(a) Overall heater length, m (ft) _____

(b) Length required for bundle removal m (ft) _____

b. Shell:

(1) Material; ASTM No. _____

(2) Outside diameter, mm (in) _____

(3) Thickness, mm (in) _____

(4) Design temperature, °C (°F) _____

(5) Design pressure, kPa (psig) _____

(6) Test pressure, kPa (psig) _____

c. Shell Cover:

(1) Material; ASTM No. _____

(2) Thickness, mm (in) _____

ATTACHMENT 5

EQUIPMENT DATA
(Continued)

GILBERT/COMMONWEALTH HEATER NO.

_____
(BIDDER'S NAME)

d. Tubes:

(1) Material; ASTM No. _____

(2) Gage No., mm (BWG) _____ AW or MW

(3) Outside diameter, mm (in.) _____

(4) Number of tubes _____

(5) Average effective length (over U-bends), m (ft) _____

(6) Number of passes _____

(7) Design temperature, °C (°F) _____

(8) Design pressure, kPa (psi) _____

(9) Test pressure, kPa (psig) _____

e. Tubesheet:

(1) Material; ASTM No. _____ ; _____

(2) Thickness, mm (in.) _____

(3) Minimum ligament thickness between holes in tubesheet, mm (in.) _____

(4) Overlay material, ASTM No. _____

ATTACHMENT 5

EQUIPMENT DATA
(Continued)

GILBERT/COMMONWEALTH HEATER NO.

_____
(BIDDER'S NAME)

(5) Thickness of overlay after machining, mm (in.) _____

g. Channel:

(1) Material; ASTM No. _____;_____

(2) Thickness, mm (in.) _____

h. Channel Cover:

(1) Type and size mm (in) _____;_____

(2) Material and ASTM No. _____;_____

(3) Thickness, mm (in.) _____

i. Pass Partition:

(1) Material; ASTM No. _____;_____

(2) Thickness, mm (in.) _____

j. Baffles:

(1) Material; ASTM No. _____;_____

(2) Thickness and spacing, mm (in.) _____

k. Impingement Plates:

(1) Material; ASTM No. _____;_____

(2) Thickness, mm (in.) _____

ATTACHMENT 5

EQUIPMENT DATA
(Continued)

GILBERT/COMMONWEALTH HEATER NO.

_____
(BIDDER'S NAME)

l. Antiflash Baffle:

(1) Material; ASTM No. _____ ; _____

(2) Thickness, mm (in.) _____

m. Gasket material _____

n. Weights (per heat shell):

(1) Total shipping weight, kg (lb) _____

(2) Flooded, kg (lb) _____

(3) Operating, kg (lb) _____

(4) Bundle, kg (lb) _____

o. Connections:	Number	Size mm (in)
(1) Feedwater		
(2) Extraction steam		
(3) Drains in from heater No. ___		
(4) Drains out		
(5) Vents		

ATTACHMENT 5

EQUIPMENT DATA
(Continued)

GILBERT/COMMONWEALTH HEATER NO.

_____
(BIDDER'S NAME)

p. Relief Valves:

	Tube Side	Shell Side
(1) Manufacturer	_____	_____
(2) Type and model No.	_____	_____
(3) Size and relieving capacity mm (in), tonnes/hr (lb/hr)	_____	_____
(4) Material	_____	_____

q. Gage Glasses:

	Tag No.	Model No.	Visibility Range	Mfr.	Material	Other Information
(1)	LI- *	_____	_____	___	_____	_____
(2)	LI- *	_____	_____	___	_____	_____
(3)	LI- *	_____	_____	___	_____	_____

* To be supplied later.

r. Special:

List of special tools which shall be furnished _____

_____

_____

ATTACHMENT 5

EQUIPMENT DATA
(Continued)

GILBERT/COMMONWEALTH HEATER NO.

_____
(BIDDER'S NAME)

s. Volumes:

(1) Volume of saturated water in shell external to subcooling zone, m^3 (ft^3) _____

(2) Volume of water in subcooling zone, m^3 (ft^3) _____

(3) Volume of steam in shell, m^3 (ft^3) _____

t. Area of opening between heater shell and subcooling zone, mm^3 (in^2) _____

ATTACHMENT 6

SPECIFICATION EXCEPTIONS

GILBERT/COMMONWEALTH HEATER NO.

The Bidder certifies that the bid is complete and in absolute agreement with the requirements of this Specification, except as specifically stated below. (Use additional sheets if required.)

_____
(BIDDER'S NAME)

_____
(MANUFACTURER'S NAME)

_____
(QUOTATION NUMBER)

Attest: _____
(SIGNATURE)

_____
(TITLE)

LAKHRA POWER FEASIBILITY STUDY

SPECIFICATION M-6

DEAERATOR

LPS/B1522/D2

SPECIFICATION M-6

DEAERATOR

TABLE OF CONTENTS

Item	Title	Page
1.0	DESCRIPTION OF WORK	1
2.0	WORK INCLUDED	1
3.0	WORK NOT INCLUDED	1
4.0	APPLICABLE CODES, STANDARDS, AND REGULATORY REQUIREMENTS	2
5.0	SUPPLEMENTAL DATA	2
6.0	VENDOR DATA	2
7.0	DESIGN REQUIREMENTS	5
8.0	PERFORMANCE REQUIREMENTS	7
9.0	MATERIAL REQUIREMENTS	8
10.0	FABRICATION AND ASSEMBLY REQUIREMENTS	8
11.0	INSTALLATION REQUIREMENTS (NONE)	9
12.0	PERSONNEL REQUIREMENTS	9
13.0	INSPECTIONS AND TESTS (NONE)	9
14.0	CLEANING, CORROSION PROTECTION, AND COATING	9
15.0	MARKING AND IDENTIFICATION	9
16.0	PACKAGING, SHIPPING, AND STORAGE	10
17.0	ACCEPTANCE CRITERIA	11

SPECIFICATION M-6

DEAERATOR

TABLE OF CONTENTS
(Continued)

ATTACHMENTS

1. Equipment Data Forms (5 pages)

2. Heat Balance

3. Water Chemistry

4. Specification Exceptions Form (1 page)

LAKHRA POWER FEASIBILITY STUDY

TECHNICAL SPECIFICATION M-6

DEAERATOR

1.0 DESCRIPTION OF WORK

The Work to be performed under this Contract shall include the design, furnishing of materials and components, fabrication, delivery to the jobsite, and assistance during startup and initial operation, and acceptance testing of the deaerator in accordance with the requirements of this Specification. The deaerator will be used at two 350 MW power plants for the Water and Power Development Authority (WAPDA) to be located in Pakistan.

2.0 WORK INCLUDED

The Work shall include at least the following for each of the two units:

a. One horizontal deaerator, mounted upon and with necessary connections to, one horizontal storage tank.

b. All internal and interconnecting piping.

c. Safety valves as required by the ASME Code.

d. Any special tools required for maintenance.

e. Startup and operating vent valves and orifices.

f. Technical direction of installation and certification of completed storage tank.

3.0 WORK NOT INCLUDED

The following items are not included in the requirements of this Section, but will be accomplished by others:

a. Anchor bolts and structural support steel.

b. Unloading, rigging, and erection.

c. Insulation and lagging.

d. Level control and alarms.

e. Field welding and radiography.

4.0 APPLICABLE CODES, STANDARDS, AND REGULATORY REQUIREMENTS

Design, materials, manufacture, installation, examination, testing, inspection, and documentation shall conform to the applicable portion of the following specifications, codes, and standards, including case rulings, interpretations, and addenda as applicable and in force at the time of issue of this Specification:

a. American Society for Testing and Materials (ASTM):

   1. A 516, "Specification for Pressure Vessel Plates, Carbon Steel for Moderate- and Lower-Temperature Service."

   2. D 888, "Tests for Dissolved Oxygen in Water."

b. American Society of Mechanical Engineers (ASME) Boiler and Pressure Vessel Code:

   1. Section VIII, "Pressure Vessels, Division 1."

   2. Section IX, "Welding and Brazing Qualifications."

c. Heat Exchange Institute (HEI) "Standard and Typical Specifications for Deaerators." The HEI Standards are mandatory minimum requirements unless specific exception is granted by the Engineer in writing."

5.0 SUPPLEMENTAL DATA

The documents listed on the contents page as attachments are applicable to the Work, to the extent specified herein.

6.0 VENDOR DATA

6.1 Vendor data shall be furnished in accordance with the requirements indicated on the attached Vendor Data Requirements and Submittal Schedule and the following paragraphs.

6.2 Vendor shall furnish Certified Vendor Drawings, include a list of drawings by category, such as general arrangement, and foundation data. If titles of the Certified Vendor Drawings are unknown, Bidder shall submit the estimated number of drawings he will submit in each category.

6.3 INSTRUCTION BOOKS

6.3.1 The Vendor shall provide copies of an instruction book covering all equipment being furnished. The instruction book shall

.62

have hard front and back covers and have proper identification of the front cover as to contents. Instruction books shall be distributed prior to equipment being shipped.

6.3.2 Instruction books are not considered design manuals, and if any descrepancies arise between the Vendor's drawings and instruction books, or items omitted from the drawings which are contained in the instruction book recommendations, the Vendor shall amend the instruction books or shall modify the installation at his own expense, whichever is deemed by the Owner as giving the most proper and operative final installation.

6.4 The following items are requested to be furnished with the bid. Data which are representative rather than exact shall be identified as such:

a. Outline drawings of equipment.

b. Completion and return of attached Equipment Data forms.

c. Description of fabrication procedures and qualifications.

d. Description of quality control exercised during manufacture, and list of all material, chemical, and physical analysis reports, nondestructive tests, and factory tests that are included.

e. Execution and return of the attached Specification Exceptions form.

6.5 DELIVERY DATES

Bidder shall base his bid on meeting the following delivery requirements:

a. Drawings (sometimes called "approved for layout" or AFL) to be furnished by Vendor, showing outlines and overall or approximate dimensions and weights, suitable for use by Engineer in developing plant layouts: complete submittal by (later).

b. Vendor Drawings (sometimes called "certified for construction" or CFC) submitted to Engineer for approval or comment: first submittals by (later): complete drawings and information by (later).

c. Resubmittals, by Vendor, of drawings, procedures, or similar items which are returned by the Engineer or QA Organization with a status other than "approved": 6 weeks after return by the Engineer or QA Organization.

d. First item of equipment: (later).

e. Final item of equipment: (later).

NOTE: Where actual required delivery dates, as agreed to by Owner and Vendor, appear on the Purchase Order or Purchase Order Supplement, they will amend the above dates. This Specification will not be amended to reflect changes in delivery dates.

6.6 QA/QC REQUIREMENTS

Description of quality control exercised during manufacture and list of all nondestructive tests, inspections, and factory tests shall be provided.

6.7 PERFORMANCE TEST REPORTS AND CERTIFICATIONS

The following performance reports and certifications shall be submitted to the Owner prior to acceptance of the Work:

a. Certified copies of all shop test data shall be forwarded to the Engineer for later distribution to the Owner.

b. The Vendor shall furnish procedures and instructions for all field installation and all required startup tests and instruction books for the equipment being furnished.

6.8 MATERIAL TEST REPORTS AND CERTIFICATIONS

Three certified copies of all mill test reports and results of nondestructive weld tests for the structural steel furnished will be supplied to the Owner.

6.9 SPECIAL TOOLS AND SPARE PARTS

a. Special Tools:

The Vendor shall furnish one complete set of all special tools, all in first class condition, which will be required for maintenance of the equipment covered by this Specification. Identification of all tools by name and number shall be provided, and this number shall appear on drawings and instructions to indicate the application of the tools furnished and to permit the ordering replacement.

b. The Vendor shall supply, with his proposal, pricing for 1 and 5 year supplies of spare parts.

7.0 DESIGN REQUIREMENTS

7.1 The deaerator shall be of horizontal cylindrical configuration, mounted on the horizontal, cylindrical storage tank, with a mounting system designed to transmit all loads directly to the storage tank support feet.

7.2 Individual heating and deaerating trays shall be interchangeable, of such weight that they can be easily handled by one man, and so designed as to interlock without the possibility of incorrect positioning. Removable doors shall be provided, and these together with the tray supporting structure shall be arranged for ready removal or replacement of trays. All trays, troughs, overflow weirs, spray hoods, and baffles shall be of type 430 stainless steel material.

7.3 Internal bolting and tie rods shall be of corrosion-resisting material. Copper alloys shall not be used as corrosion-resisting material. Heating and/or deaerating element mounting system shall allow for expansion and contraction of the element components.

7.4 Inlet water-spray valves or other inlet distribution devices shall be readily accessible for inspection or removal. Any device used to distribute the incoming condensate shall be designed and fabricated to prevent distortion or collapsing under any service condition. Spray valves and inlet piping must be arranged to maintain a filled piping system at all times after initial filling.

7.5 Suitable baffles or other energy dissipation devices shall be provided at all water, steam, and drip inlets to prevent distortion and damage to the heating or deaerating element. Dislocation of trays will not be allowed.

7.6 Deaerated water shall be distributed uniformly throughout the storage tank to minimize the temperature differential between the stored water and the pump suction water. Provisions shall also be made to limit resonant wave action in the storage tank.

7.7 Each pump suction connection from the storage tank shall be provided with an antivortex device. Each deaerator outlet and equalizing connection shall be provided with baffles to prevent damage to the heating and/or deaerating element(s) from flowback.

7.8 An internal, direct contact-type vent condenser shall be incorporated within the heater shell for removal of noncondensable gases. It shall be designed to permit the oxygen guarantee to be maintained throughout the load range. Steam losses in venting shall be held to a minimum for the oxygen level guarantee.

7.9 Sparger nozzles shall be provided in storage tank for warming during periods of unit shutdown.

7.10 Sufficient safety valve capacity shall be provided to handle a flow of 76.8 tonnes/hr 169,407 (lb/hr), due to possible failure of the pegging steam control valve in the open position.

7.11 Internal stiffening rings shall be provided where required in order to allow the deaerator and storage tank to sustain a full vacuum.

7.12 CONNECTIONS

7.12.1 All connections and connection locations shall be subject to approval by the Engineer. All nozzles for connections up to and including 50mm (2 inches) shall be socket weld type, and for sizes 65mm (2-1/2 inches) and above, butt weld type.

7.12.2 All necessary connections shall be provided including at least the following:

		Quantity	Size
a.	Steam inlet	1	350mm (14")
b.	Condensate inlet(s)	1	450mm (18")
c.	Feedwater pump suction(s)	2	300mm (12")
d.	Heater drain inlet(s)	2	250mm (10")
e.	Safety valves	(by Vendor)	(by Vendor)
f.	Feedwater pump recirculation(s)	2	150mm (6")
g.	(Maintenance) drain	1	200mm (8")
h.	Gage glass	2	50mm (2")
i.	Level control and alarm water column	2	50mm (2")
j.	Pressure gage	2	25mm (1")
		Quantity	Size
k.	Sampling	2	20mm (3/4")
l.	Thermowell	2	25mm (1")

m. Miscellaneous drains inlet ___1___ 250mm (10")

7.13 Final spacing of the storage tank support feet shall be based on the building column spacing, as provided to the Vendor by the Engineer.

7.14 The Vendor shall state any restrictions or limitations pertaining to the attachment of insulation.

8.0 PERFORMANCE REQUIREMENTS

8.1 The guaranteed oxygen content of the effluent shall not exceed 0.005 cc/liter (ASTM D 888) as described in the Standards of the Heat Exchange Institute.

8.2 Design and operating data for the deaerator and storage tank are as follows:

a. Design pressure kPa (psia) 1,234 kPa (179)

b. Design temperature °C (°F) 343 (650)

c. Feedwater leaving tank tonnes/hr (lb/hr) 1,318.5 (2,907,465)

d. Feedwater temperature °C (°F) 184 (363)

e. Feedwater enthalpy kj/kg (Btu/lb) 780.1 (335.4)

f. Condensate entering tonnes/hr (lb/hr) 1,102.3 (2,430,712)

g. Condensate temperature °C (°F) 1.44 (291.8)

h. Condensate enthalpy kj/kg (Btu/lb) 605.4 (260.3)

i. Operating pressure kPa (psia) 1,906 kPa (159)

j. Extraction steam tonnes/hr (lb/hr) 76.8 (169,407)

k. Extraction steam enthalpy kj/kg (Btu/lb) 3,177 (1,365.9)

l. Drains entering tonnes/hr (lb/hr) 139.1 (306,730)

m. Drains enthalpy kj/kg (Btu/lb) 822.7 (353.7)

n. Six minute storage tank working liter (gal) capacity 147,631 (39,000)

o. Storage tank od (max) m (ft-in) 3 (10)

p. Storage tank length overall m (ft-in) (max) 23 (75)

8.3 TRANSIENTS

The deaerator shall be designed to sustain without physical damage the normal temperature variations inherent in steam power plants due to load changes, startups, shutdowns, and the transient conditions imposed by a full net load rejection without trip of the turbine or boiler. The effect of this lost occurrence is an abrupt cessation of steam and drain flow into the deaerator with continued flow of condensate. For other cycle considerations, an auxiliary source of steam may be provided, but the design shall assume that no such secondary source is available.

9.0 MATERIAL REQUIREMENTS

9.1 Material of construction shall conform to ASTM or ASME standard designations where possible.

9.2 Shells and heads of tanks shall be ASTM A 516, Grade 70.

9.3 All internals, trays, tray supports, tray baffles, tray enclosures, impingement baffles, spray valves, and internal piping, shall be type 430 stainless steel.

10.0 FABRICATION AND ASSEMBLY REQUIREMENTS

10.1 Interconnecting piping sections between the tanks shall be tack welded together and completely shop welded to their respective tanks during mounting and positioning of the deaerator on the storage tank to assure accurate alignment of the piping in the final field erection. With the tanks so positioned, the tray supports and storage tank feet shall be checked to assure that they are in parallel planes. All storage tank support feet shall be in the same plane and be flat to accommodate thermal movement of all feet not designated as anchor feet.

10.2 After shop assembly has been inspected by the Owner and/or the Engineer, the interconnecting welds shall be carefully removed in such a manner as to provide for normal fitup clearance for field welds without fillers or spool pieces. Any such additional hardware, if required, shall be provided by the Vendor at no additional charge.

10.3 Welders and welding procedures shall be qualified in accordance with the ASME Code, Section IX, as modified by paragraph UG-84, and Section VIII, Division 1.

11.0 INSTALLATION REQUIREMENTS

None

12.0 PERSONNEL REQUIREMENTS

12.1 The Vendor shall employ the following qualified personnel to perform the Work:

All welders shall be qualified under the ASME Code, Section IX.

12.2 A qualified technical representative shall be provided to direct the installation and startup of the equipment.

13.0 INSPECTIONS AND TESTS

None

14.0 CLEANING, CORROSION PROTECTION, AND COATING

Every effort shall be made in the construction of the deaerator and storage tank to avoid dirt traps in the shell and tank internals. Internal surfaces of the shells shall be grit blasted. Care shall be taken during final assembly of each piece of equipment to assure that all mill scale, dirt, dust, and machining oil are removed.

15.0 MARKING AND IDENTIFICATION REQUIREMENTS

15.1 Each package, skid, box and crate shall be marked on the outside with the following information so that it is readily visible:

a. (Owner's name)
(Project identification)
(Address)
(City, state, zip code)

b. Purchase Order Number

c. Weight:

d. Equipment Nos. as applicable:

15.2 Each unit shall be identified with a tag number. The number shall be permanently imprinted with at least 5mm (3/16") high letters on a 22 gage stainless steel tag. The tag shall be attached to the enclosure with pins of a similar material.

15.3 Each unit shall have a permanently secured data plate made from at least 22 gage stainless steel, permanently imprinted with 5mm (3/16") high letters, and containing the following information:

a. Manufacturer's name and address:

b. Model Number:

c. Serial Number:

d. Date of Manufacture:

e. Duty:

f. Weight:

15.4 The data plate shall be located where it is readily visible and shall be securely attached with pins of a material similar to the plate.

15.5 Equipment item numbers shall be utilized by the Vendor in designating equipment. Numbers so assigned by the Vendor may be reassigned at the option of the Engineer.

15.6 Items furnished under these specifications, but not identified herein, shall have tags inscribed as directed by the Engineer.

16.0 PACKAGING, SHIPPING, AND STORAGE

16.1 Equipment or piping that may have been hydrostatically tested shall be checked to insure that all water has been drained from the unit prior to placing equipment in storage. After any equipment is in storage, temporary wood or steel plate covers shall be provided over flanges to prevent admittance of water to the unit. The Vendor shall be responsible for any damage to unit, equipment, and associated piping until such time as it has been accepted by the Owner.

16.2 All exposed machine surfaces and openings shall be coated and protected to prevent corrosion and damage during shipment, storage, and erection. All other outside surfaces shall be given one shop coat of zinc-rich primer, minimum 2.0 mils dry-film thickness, before shipment.

16.3 All internal surfaces of the deaerator and storage tank shall be protected with a water-soluble, rust preventive coating, subject to approval of the Engineer. After this application, all openings shall be blanked off or plugged to eliminate air circulation until the heater is erected into operating position. A warning to this effect shall be painted on the shell.

16.4 Valves and trays shall be shipped loose for installation after system cleanup.

16.5 The Vendor shall submit his complete cleaning and packaging procedure for review prior to proceeding with his Work.

16.6 As a minimum, the packaging and protective measures for the deaerator and storage tank shall be suitable for 1 year of outdoor storage at the site without degradation of the equipment.

17.0 ACCEPTANCE CRITERIA

17.1 MANUFACTURING ERRORS

Equipment and materials shall be complete in all respects within the limits herein specified. Manufacturing errors and omissions, required to be corrected in the field, shall be performed under the direction of and at the expense of the Vendor. If the error requires shipment back to the factory, the disassembly, handling, shipping, and reassembly shall be at the Vendor's expense.

17.2 Submittal of Vendor data as required in article 6.0.

17.3 Submittal of performance reports and certifications as required in Paragraph 6.8.

ATTACHMENT 1

EQUIPMENT DATA

Manufacturer _____

Proposal No. _____

1. Drawings:

   List general outline and arrangement drawings submitted with bid. _____

2. Capacity of storage tank at normal water level liters (gal) _____

3. Weights:

   a. Total net weight of heater shell with internals kg (lb) _____

   b. Total heater operating weight kg (lb) _____

   c. Total heater flooded weight kg (lb) _____

   d. Shipping weight, heater kg (lb) _____

   e. Storage tank weight (empty) kg (lb) _____

   f. Storage tank weight (operating) kg (lb) _____

   g. Storage tank weight (flooded) kg (lb) _____

   h. Shipping weight, storage tank kg (lb) _____

ATTACHMENT 1

EQUIPMENT DATA

4. Overall dimensions:

a.	Heater length	m (ft)	_____
b.	Heater diameter	m (ft)	_____
c.	Storage tank length	m (ft)	_____
d.	Storage tank diameter	m (ft)	_____
e.	Assembled height, overall	m (ft)	_____

5. Performance data:

a.	Oxygen content guarantee	cc/l	_____
b.	Residual free carbon dioxide content in heated water	cc/l	_____
c.	Differential temperature between water leaving and extraction steam saturation temperature	°C (°F)	_____
d.	Maximum expected pressure drop from condensate inlet through spray nozzles at 100% flow	kPa (psi)	_____
e.	Maximum steam loss through air vent orifice at rated load	tonnes/hr (lb/hr)	_____
f.	Vent condenser capacity	tonnes/hr (lb/hr)	_____

ATTACHMENT 1

EQUIPMENT DATA

g. Predicted quantity of vented steam — tonnes/hr (lb/hr) _____

h. Degree of subcooling of vented vapors — °C (°F) _____

6. Construction data:

a. Deaerator or direct contact heater:

1) Shell material — ASTM No. _____

2) Shell thickness — mm (in) _____

3) Head material — ASTM No. _____

4) Head thickness — mm (in) _____

5) Tray material _____

6) Tray construction (welded or formed, etc.) _____

7) Number of trays & weight (each) — No.; kg (lb) _____;_____

8) Tray area — m^2 (ft^2) _____

9) Internal bolting material _____

10) Access doors, number and sizes _____;_____

ATTACHMENT 1

EQUIPMENT DATA

11) Number & size of spray nozzles _____ ; _____

12) Spray nozzle material (furnish detail drawing) _____

13) Total linear meters tray spilling area — lin m (lin ft) _____

14) Relief valve:

a) Quantity _____

b) Size mm (in) _____

c) Make _____

d) Model _____

e) Capacity kg/hr (lb/hr) _____

b. Vent condenser:

Baffle material _____

c. Storage tank:

1) Shell material ASTM No. _____

2) Shell thickness mm (in) _____

3) Head material ASTM No. _____

4) Head thickness mm (in) _____

5) Design pressure kPa (psig) _____

ATTACHMENT 1

EQUIPMENT DATA

6) Design temperature °C (°F) _____

7) Internal baffling (material and thickness) _____;_____

d. Connection sizes and number:

1) Steam mm (in); No. _____;_____

2) Feedwater mm (in); No. _____;_____

3) Vents mm (in); No. _____;_____

4) Drains mm (in); No. _____;_____

5) Condensate inlet mm (in); No. _____;_____

7. Tools:

List of tools which shall be furnished with equipment _____

_____

_____

GUARANTEED – 11.85 kPa, 3% MU, TC2F

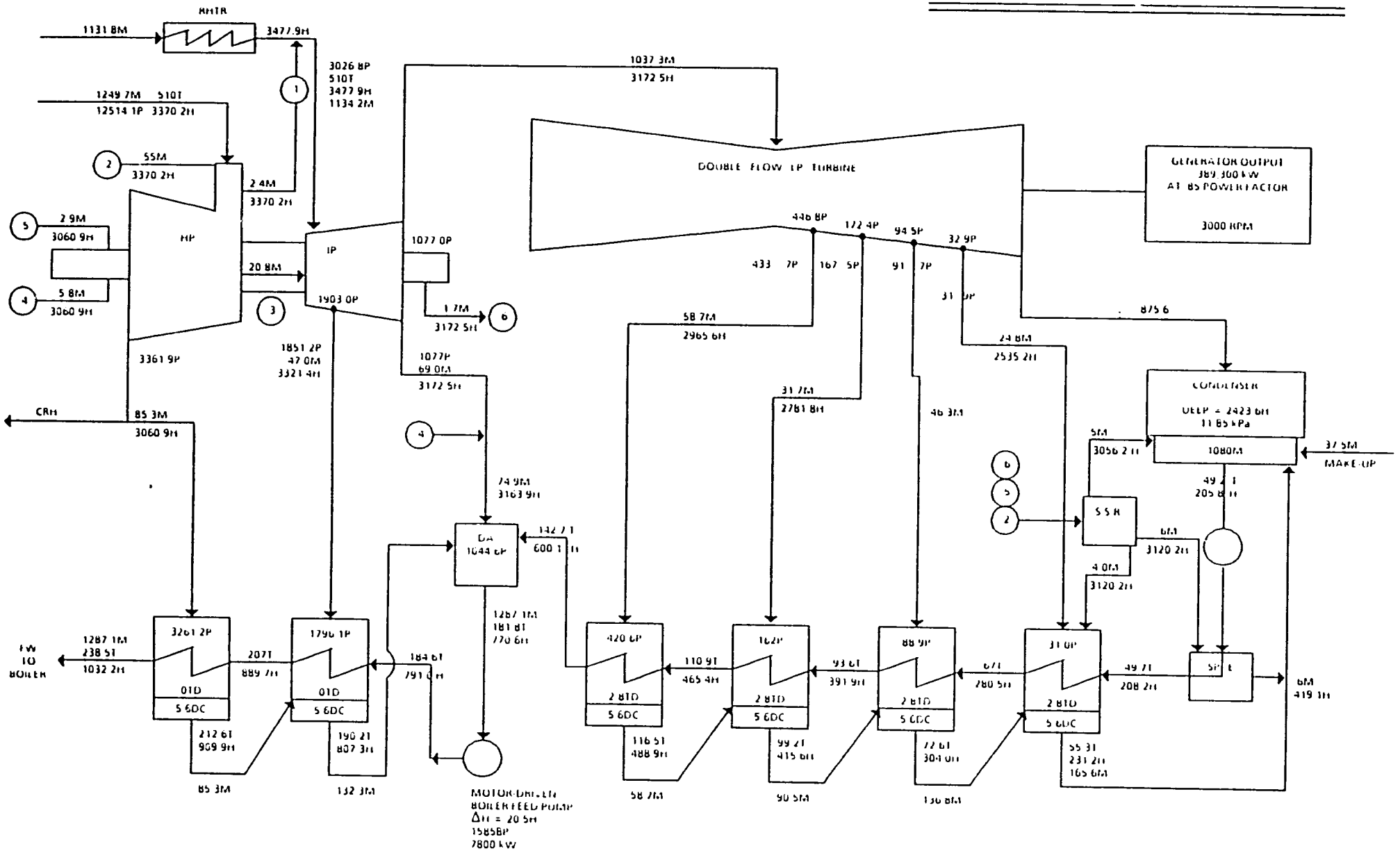

GROSS HEAT RATE = 8717 kj/kWh
(Heat Rate may vary depending on the T/G Vendor Selected)

M – Flow – tonnes/hr
P – Pressure – kPa
H – Enthalpy – kj/kg
T – Temperature – °C

LAKHRA POWER PLANT
FEASIBILITY STUDY
TYPICAL PRELIMINARY TURBINE HEAT BALANCE
SI UNITS
G/C II 11/12/85 HB-1

B1619-4/GF#72

VWO – NP – 8.47 kPa, 0.5% MU, TC2F

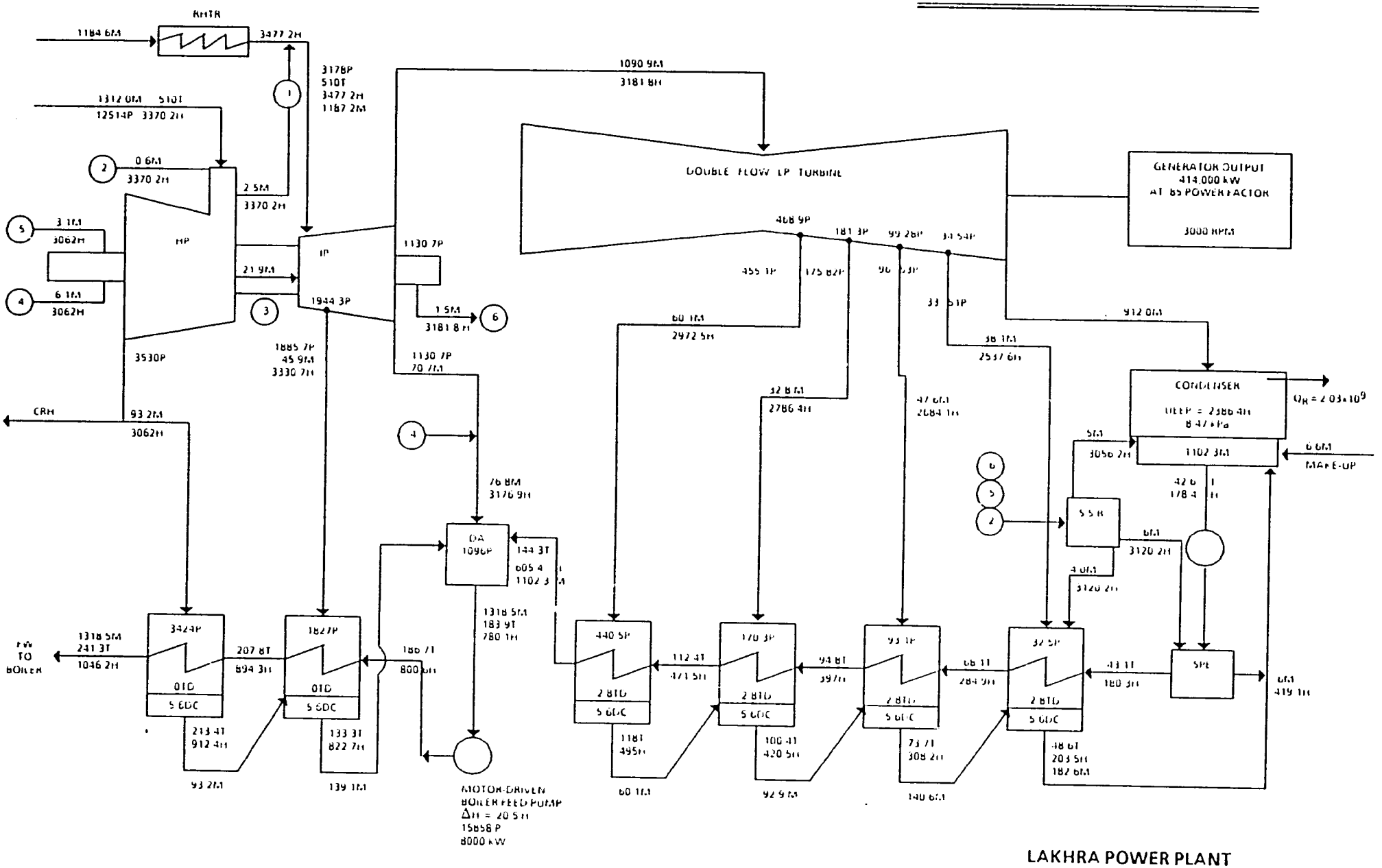

GROSS HEAT RATE = 8554 kj/kWh
(Heat Rate May Vary Depending on T/G Vendor Selected)

M – Flow – tonnes/hr
P – Pressure – kPa
H – Enthalpy – kj/kg
T – Temperature – °C

LAKHRA POWER PLANT
FEASIBILITY STUDY
TYPICAL PRELIMINARY TURBINE HEAT BALANCE
SI UNITS
G/C II 11/12/85 HB-2

B1619-2/GF#72

GUARANTEED – 3.5" HgA, 3% MU, TC2F

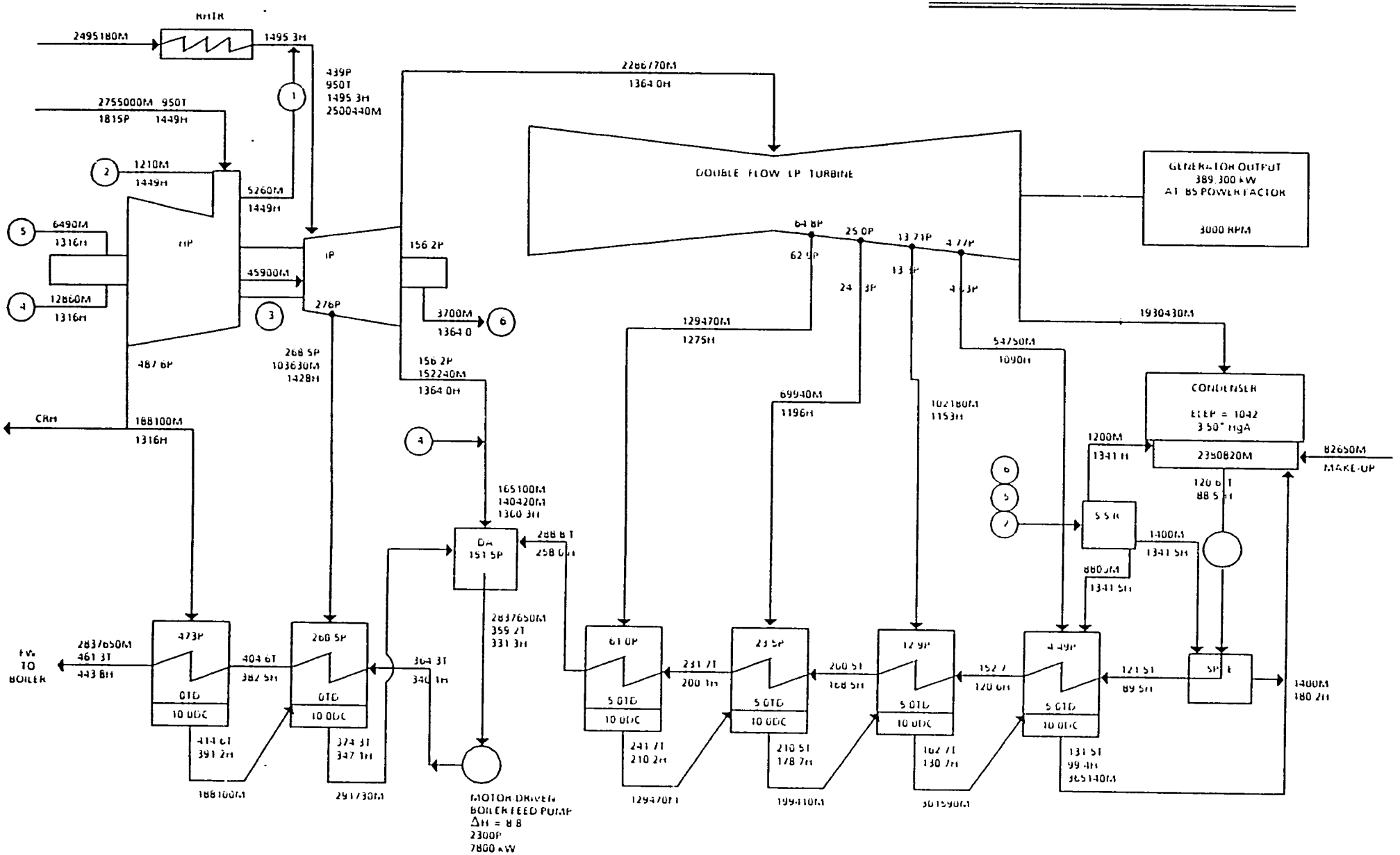

GROSS HEAT RATE = 8263 Btu/kWh
(Heat Rate may vary depending
on the T/G Vendor Selected)

M – Flow – lbs/hour
P – Pressure – psia
H – Enthalpy – Btu/lb
T – Temperature – °F

LAKHRA POWER PLANT
FEASIBILITY STUDY
TYPICAL PRELIMINARY TURBINE HEAT BALANCE
ENGLISH UNITS
G/C II 11/12/85 HB-1

B1619-3/GF#72

VWO – NP – 2.5" HgA, 0.5% MU, TC2F

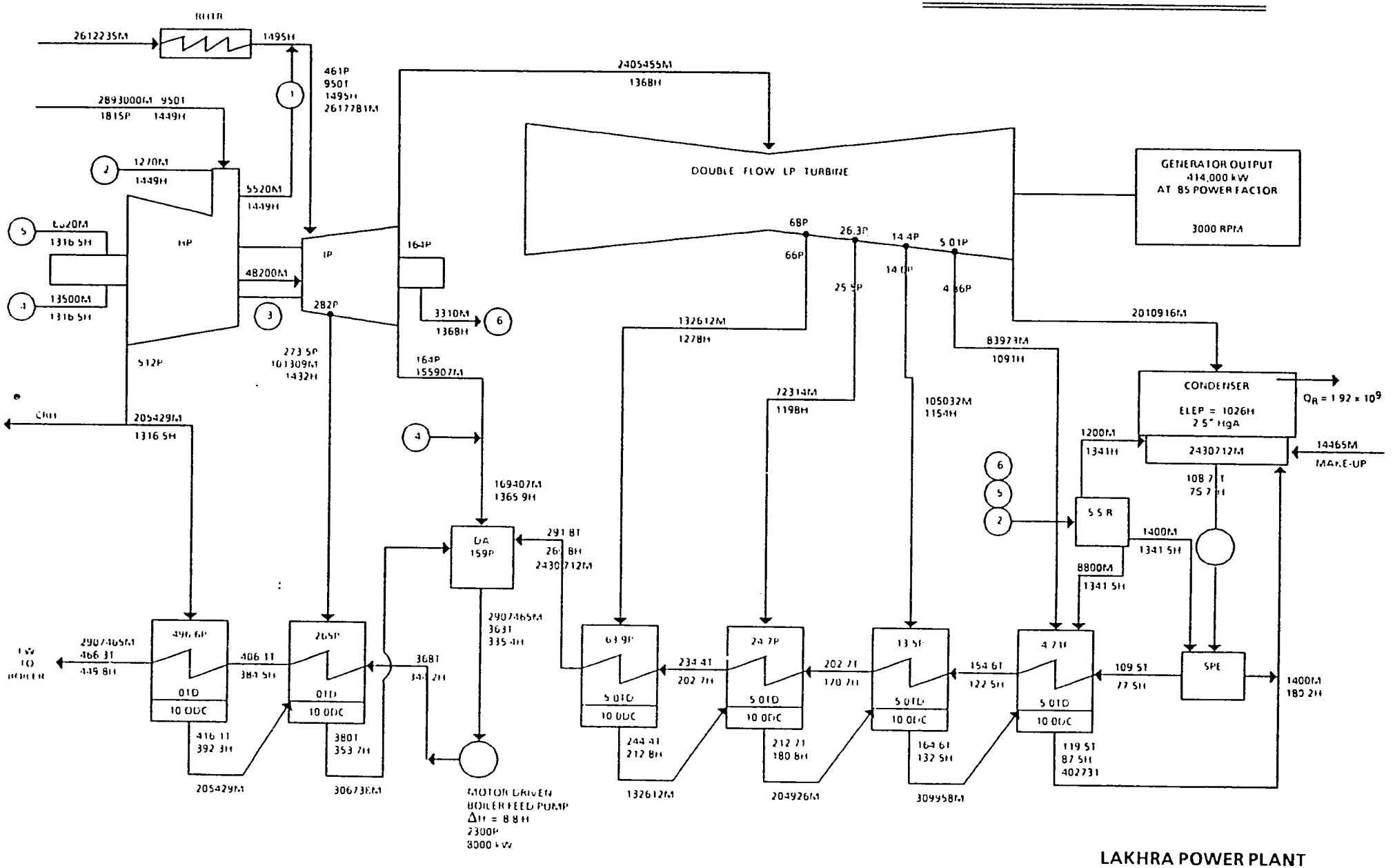

GROSS HEAT RATE = 8108 Btu/kWh
(Heat Rate may vary depending on the T/G Vendor Selected)

M – Flow – lbs/hour
P – Pressure – psia
H – Enthalpy – Btu/lb
T – Temperature – °F

LAKHRA POWER PLANT
FEASIBILITY STUDY
TYPICAL PRELIMINARY TURBINE HEAT BALANCE
ENGLISH UNITS
G/C II 11/12/85 HB-2

1619 1/GF#72

ATTACHMENT 3

WATER CHEMISTRY

pH at 25°C (77°F)	8.9 - 9.2
Maximum dissolved solids, ppm	25
Maximum oxygen as O_2, ppm	0.1
Morpholine, ppm	2 - 6
Hydrazine, ppm	15 - 25
Maximum chlorides as CL-, ppm	1.0
Maximum flourides as F-, ppm	1.0

ATTACHMENT 4

SPECIFICATION EXCEPTIONS

_____
(UTILITY NAME)

_____
(PROJECT NAME)

GILBERT/COMMONWEALTH DEAREATOR

The Bidder certifies that the bid is complete and in absolute agreement with the requirements of this Specification, except as specifically stated below. (Use additional sheets if required.)

_____
(BIDDER'S NAME)

_____
(MANUFACTURER'S NAME)

_____
(QUOTATION NUMBER)

ATTEST: _____
(SIGNATURE)

_____
(TITLE)

LAKHRA POWER FEASIBILITY STUDY

SPECIFICATION M-7

MOTOR DRIVEN BOILER FEED PUMPS

LPS/2B1811/D3

SPECIFICATION M-7

MOTOR DRIVEN BOILER FEED PUMPS

TABLE OF CONTENTS

ARTICLE	TITLE	PAGE
1.0	DESCRIPTION OF WORK	1
2.0	WORK INCLUDED	1
3.0	WORK NOT INCLUDED	1
4.0	APPLICABLE CODES, STANDARDS, AND REGULATORY REQUIREMENTS	2
5.0	SUPPLEMENTAL DATA	2
6.0	VENDOR DATA	2
7.0	DESIGN REQUIREMENTS	3
8.0	PERFORMANCE REQUIREMENTS	9
9.0	MATERIAL REQUIREMENTS	9
10.0	FABRICATION AND ASSEMBLY REQUIREMENTS	9
11.0	INSTALLATION REQUIREMENTS (NONE)	9
12.0	PERSONNEL REQUIREMENTS	10
13.0	INSPECTIONS AND TESTS	11
14.0	CLEANING, CORROSION PROTECTION, AND COATING	12
15.0	MARKING AND IDENTIFICATION	12
16.0	PACKAGING, SHIPPING, AND STORAGE	13
17.0	ACCEPTANCE CRITERIA	14

SPECIFICATION M. 7

MOTOR DRIVEN BOILER FEED PUMPS

TABLE OF CONTENTS
(Continued)

ATTACHMENTS

1. Motor Attachment Specification Boiler Feed Pumps Auxiliary Motors

2. Motor Data Form (Auxiliary Motors)

3. Water Chemistry

4. Equipment Data

5. Specification Exceptions

6. Acoustic Data Summary Sheet

LAKHRA POWER FEASIBILITY STUDY
TECHNICAL SPECIFICATION M-7

MOTOR DRIVEN BOILER FEED PUMPS

1.0 DESCRIPTION OF WORK

The work to be performed consists of designing, fabricating, testing, and delivering to the jobsite feedwater pumps and feedwater booster pumps. The pumps will be used at two 350 MW power plants for the Water and Power Development Authority (WAPDA) to be located in Pakistan.

2.0 WORK INCLUDED

The work shall include at least the following:

a. Six nominal 50 percent capacity boiler feed pumps complete with motor drives, coupling, and guards.

b. Six nominal 50 percent capacity feedwater booster pumps complete with gear speed reducer couplings and guards.

c. Spare element for the boiler feed pumps.

d. Dismantling jig for the boiler feed pumps.

e. Complete sets of warmup, recirculations, and balancing leakoff orifices for each boiler feed pump.

f. Shaft sealing closures for boiler feed pumps for use during chemical cleaning.

g. The services of a qualifed technical representative in accordance with Paragraph 1.0.

3.0 WORK NOT INCLUDED

The following items are not included in the requirements of this section, but will be accomplished by Others:

Anchor bolts and foundations.

4.0 APPLICABLE CODES, STANDARDS, AND REGULATORY REQUIREMENTS

Design, materials, manufacture, testing, inspection, and documentation shall conform to the applicable portions of the following specifications, codes, and standards including case rulings, interpretations, and addenda as applicable and in force at the time of issue of this Specification:

a. The pumps shall be furnished in accordance with the latest Hydraulic Institute Standards.

b. American Society of Mechanical Engineers (ASME) Boiler and Pressure Vessel Code:

   1. Section VIII, Division 1

   2. Section IX

c. All materials shall be in accordance with ASTM Specifications. Any exception will be subject to approval by the Owner or the Engineer.

d. All pressure piping shall be designed in accordance with ANSI B31.1, "Power Piping."

5.0 SUPPLEMENTAL DATA

The documents listed on the contents page as attachments are applicable to the Work, to the extent specified herein.

6.0 VENDOR DATA

6.1 Vendor shall furnish certified vendor drawings, and include a list of drawings by category, such as general arrangement, foundation data, and electrical connection. If titles of the certified vendor drawings are unknown, bidder shall submit the estimated number of drawings he will submit in each category.

6.2 The Vendor shall provide (No. later) copies of an instruction book covering all equipment being furnished. The instruction book shall have hard front and back covers and have proper identification on the front cover as to contents.

6.3 Instruction books are not considered design manuals, and if any discrepancies arise between the Vendor's drawings and instruction books or items omitted from the drawings which are contained in the instruction book recommendations, the Vendor shall amend the instruction books or shall modify the installation at his own expense, whichever is deemed by the Owner as giving the most proper and operative final installation.

6.4 PERFORMANCE TEST REPORTS AND CERTIFICATIONS

The following performance reports and certifications shall be submitted to the Owner prior to acceptance of the Work:

1. Certified copies of all shop test data shall be forwarded to the Engineer for later distribution to the Owner.

2. The Vendor shall furnish procedures and instructions for all field installation and all required start-up tests and instruction books for the equipment being furnished.

6.5 SPECIAL TOOLS AND SPARE PARTS

6.5.1 The Vendor shall supply the following:

One set of any special tools required to operate and maintain his equipment. All tools shall be identified by name and number, and this number shall appear on drawings and instructions to indicate the application of the tools furnished and to permit the ordering of replacement tools.

6.5.2 The Vendor shall supply, with his proposal, pricing for 1 and 5 year supplies of spare parts.

7.0 DESIGN REQURIEMENTS

7.1 SYSTEM

Each feedwater booster pump will take suction from the deaerator storage tank and will discharge directly to a boiler feedwater pump.

7.2 DESIGN CONDITIONS

Each pump shall be designed for continuous operation at the following conditions:

			Motor Driven Feedwater Pump	Feedwater Booster Pumps
a.	Capacity	liters/sec (gal/min)	228 (3,615)	228 (3,615)
b.	Suction temperature	^{o}C (^{o}F)	By Vendor	184 (363)
c.	Suction pressure	kPa (psig)	By Vendor	1,145 (166)
d.	Discharge pressure	kPa (psig)	16,010 (2,322)	2,462 (357)
e.	Interstage bleed for reheater	tonnes/hr (lb/hr)	27.3 (60,150)	27.3 (60,150)

			Motor Driven Feedwater Pump	Feedwater Booster Pumps
f.	Interstage bleed	kPa (psig)	7,860 (1,140)	
g.	Superheater attemperator spray capacity	tonnes/hr (lb/hr)	59.6 (131,500)	
h.	Superheater attemperator spray discharge pressure	kPa(psig)	17,100 (2,480)	
i.	Speed	r/min	3,000	
j.	Available NPSH, normal	m (ft)		13.4 (44)
*k.	Available NPSH, transient	m (ft)		Later
**l.	Suction side design pressure	kPa (psig)	3,102 (450)	3,102 (450)

* Normal NPSH - Pumps shall be capable of continuous operation at design conditions with no incipient cavitation as long as normal NPSH stated is met or exceeded.

** Transient NPSH - The transient NPSH stated contains no margins of any kind. Pumps shall be capable of operation at design conditions with some cavitation, without damage to pump internals when this NPSH is provided.

7.3 DYNAMIC CHARACTERISTICS

The pumps shall be designed to have a head capacity characteristic which rises steadily from the rated capacity to shutoff. At shutoff, pump head shall not be less than 120 percent and not greater than 140 percent of the head at rated capacity.

7.4 ACOUSTIC REQUIREMENTS

7.4.1 The Vendor shall submit as part of his Proposal a tabulation of octave band sound power levels in accordance with 7.5.3 below for the equipment being quoted without acoustic treatment or guarantee. The Proposal will be considered incomplete without this information.

7.4.2 The Vendor shall submit as part of his Proposal an additional price for a guaranteed maximum sound level of 90 dBA (90 decibels, A network weighted) when measured with a Type I precision sound level meter at slow response and at a distance of 1 meter (3 feet) in any direction from the nearest surface of the equipment. The Vendor shall also submit with his Proposal a tabulation of octave band sound levels in accordance with 7.5.3 below for the equipment in the sound attenuated condition.

7.4.3 The Vendor shall complete and submit as part of his Proposal the attached Acoustic Data Summary Sheet. It is preferred that the octave band levels be sound power levels in decibels with a reference power of 10 (exponent -12) watt. However, sound pressure levels in decibels with a reference pressure of 0.0002 microbars will be acceptable providing the weighting network and distance to the sound source are indicated. In the event acoustic data for similar equipment will be acceptable. However, the equipment differences should be indicated and the Vendor's estimate of the acoustical effect of these differences should be indicated.

7.4.4 The maximum sound power or sound pressure levels will be verified by measurements at the installation site at the Purchaser's discretion. The Purchaser's Engineer will perform these requested tests in accordance with standard test procedures as applicable to the particular installation or type of equipment.

7.4.5 Where no specific testing procedure is applicable, verification tests shall be conducted in accordance with the following:

7.4.6 Institute of Electrical and Electronics Engineers (IEEE) Standard 85, "IEEE Test Procedure for Airborne Sound Measurements on Rotating Electric Machinery."

7.4.7 American National Standards Institute (ANSI) S1.2, "Method for the Physical Measurement of Sound."

7.5 COMPONENT CHARACTERISTICS

7.5.1 Feedwater Pumps

7.5.1.1 The boiler feed pumps shall be multistage, barrel type with centerline support, removable head, and arranged for bottom suction and discharge connections. Rotation of the main feed pump shall be counterclockwise when facing the coupling end of the pump.

7.5.1.2 The feed pump casings shall be supported by the Vendor's base at the pump centerline in such a manner as to permit free expansion and contraction due to temperature change without causing leakage, misalignment, or excessive strain. Shim packs at least 3.2mm (1/8") thick shall be provided between the pumps and pedestal mount to permit field adjustments for alignment.

7.5.1.3 The feed pump suction and discharge connections shall be located on the bottom of the outer pump casing or barrel. The suction and discharge nozzles shall be machined for welding. The discharge nozzle material shall be the same as the Owner's ASTM A 106, Grade B, carbon steel pipe material. The two nozzles shall be welded to the barrel to permit removal of the internal parts without disturbing the piping, driver, or external supports of the pump.

7.5.1.4 The feed pumps shall be supplied with intermediate-stage bleed connections for reheat attemperation service and emergency bypass desuperheater service.

7.5.2 Shaft Seals

The feedwater pumps shall be supplied with condensate injection shaft seals of the floating ring or throttle bushing type. Unfiltered water for shaft sealing will be available from the Owner's condensate system at that pressure as required by the Vendor for his equipment. The temperature will be approximately 42.6°C (109°F). All necessary filters, pressure and temperature controls necessary to render the Owner's water supply suitable for sealing service shall be supplied. If filters are required, the Vendor shall furnish two full capacity units.

7.5.3 Booster Pumps

7.5.3.1 The booster pumps shall be of the horizontal or radially split case type with completely interchangeable inner assemblies.

7.5.3.2 The booster pump suction and discharge connections shall be flanged and arranged to permit removal of pump internals without disturbing the suction and discharge piping.

7.5.4 The reduction gears shall be of the double helical type to meet AGMA 421 with a reduction from 3,000 to booster pump rated speed and a 2.0 service factor. Gear housing shall be of fabricated steel.

7.5.5 Lubrication

7.5.5.1 A common lubrication system for each feed pump set (main pump, booster pump, motor drive, and gear speed reducer) shall be provided. The lubrication system shall include, but not be limited to:

a. lube oil reservoir,

b. ac driven auxiliary oil pump with pressure switches to operate the auxiliary pump and alarm shall be provided,

c. shaft driven main oil pump, and

d. oil cooler.

Where practicable, all oil piping, reducing orifices, necessary filtration, and valves shall be furnished and installed within the confines of the pump supports.

7.5.5.2 All lube oil piping for the feedwater pump shall be fully guarded to reduce oil fire hazards. All oil piping shall be shop fabricated, pickled, and sealed for shipment.

7.5.6 Bearing

Shaft bearings shall be spherical seat or tilting pad, self-aligning type, and the thrust bearing shall be of the Kingsbury type designed to satisfy the thrust requirements of the pump and motor used.

7.5.7 Baseplate

The pump Vendor shall supply appropriate baseplates and sole-plates for components of each set to ensure proper alignment can be attained and maintained. The arrangement of each set shall be main feed pumps, double ended motor drive, gear speed reducer, and booster pump.

7.5.8 Startup Strainers

Stainless steel mesh cone-type strainers shall be furnished for temporary installation between flanges in the suction piping to each pump set. Strainers shall be capable of withstanding full suction differential pressure.

92

7.5.9 Temperature Detectors

Bearing metal temperature thermocouples, of ISA Type E, chromel-constantan grounded junction, spring loaded, No. 20 AWG wire size shall be furnished and installed in each pump, gear, and motor bearing and all thrust bearings. Thermocouples shall be provided for the upper pump casing and lower pump casing, as well as any other area recommended by the Vendor. All pump thermocouples shall be wired to a junction box located on the pump baseplate or support.

7.5.10 Vibration Detection

Provision shall be made near each bearing on the main boiler feed pump for mounting the Owner's vibration detection equipment. The Owner's equipment will be of the shaft riding or proximity type.

7.5.11 Insulation and Enclosures

7.5.11.1 The boiler feed pumps shall be supplied with insulation installed on the casing and a sheet metal enclosure over the insulation. The insulation shall consist of at least 50mm (2") of fiberglass blanket insulation securely attached to the pump casing by dead soft stainless steel wire and suitable insulation lugs welded to the pump casing.

7.5.11.2 The metal enclosure may be omitted if the pump is enclosed by the Vendor's sound enclosure.

7.5.12 Couplings

Gear type flexible couplings with readily removable guard shall be furnished for connecting motor driven pumps to motors and gears.

7.5.13 Main drive motors for the boiler feed pumps shall meet the requirements of Attachment 1A Motor Specification. Auxiliary motors shall meet the requirements of Attachment 1 Motor Specification.

7.6 VIBRATION REQUIREMENTS

7.6.1 Maximum vibration at all operating conditions shall not exceed .025mm (1 mil).

7.6.2 Critical speed shall not be within 20 percent of operating speed.

8.0 PERFORMANCE REQUIREMENTS

The feedwater and feedwater booster pumps, when installed and functioning, shall meet the design conditions stated in Paragraph 7.2.

9.0 MATERIAL REQUIREMENTS

9.1 Materials of construction shall be as follows:

		Motor Driven Feedwater Pump	Feedwater Booster Pumps
a.	Barrel	Carbon steel	
b.	Inner casing	4-6% Chrome	4-6% Crome
c.	Impellers	12-14% Chrome	12-14% Chrome
d.	Volutes or diffusers	12-14% Chrome	
e.	Shaft	Forged 12-14% Chrome	Forged 12-14% Chrome
f.	Shaft sleeves	12-14% Chrome	12-14% Chrome

9.2 The pumps shall be constructed from material suitable of operation with feedwater adjusted to a pH 8.9 to 9.2 and a nominal oxygen content of 0.003 to 0.005cc/liter with a maximum oxygen content of 0.010cc/liter at temperature up to 176.7°C (350°F).

10.0 FABRICATION AND ASSEMBLY REQUIREMENTS

The pumps shall be fabricated and assembled in accordance with the following:

a. The codes and standards stated in Article 4.0.

b. The Vendor's QA/QC program.

11.0 INSTALLATION REQUIREMENTS

NONE

-a9-

12.0 PERSONNEL REQUIREMENTS

12.1 The services of qualified field representatives shall be provided for a total of 10 days during the installation of the equipment. The representatives shall be responsible for the following:

a. Technical direction for:

1. Setting sole plates of equipment supplied.

2. Unloading and transferring the equipment to temporary field storage and to final installation.

3. Installation and assembly of all equipment supplied by the Vendor on suitable foundations and structures supplied by the Owner. Complete assembly and welding procedures shall be made available to the Owner's erection personnel at least 6 months prior to start of erection.

b. Scheduling and periodically advising the Owner of progress and the anticipated completion date.

c. Inspecting the assembly, alignment, and cleanliness of all parts.

d. Instructing the Owner's operation personnel in the following:

1. Conduct of such operating tests as the Vendor may specify.

2. Initial starting and placing the equipment in good operating condition.

3. Vendor's recommended procedure for regular starting, operating, and shutting down of all equipment supplied.

e. Furnishing all special installation test instruments and tools.

f. Insuring that all technical direction complies with the Owner's requirements.

12.2 All welders shall be qualified in accordance with the ASME Boiler and Pressure Vessel Code, Section IX.

13.0 INSPECTIONS AND TESTS

13.1 The following inspections and tests shall be performed:

a. Performance Test

A performance test is required on all pumps to determine head, capacity, and NPSH requirements. The test shall be performed at rated speed for 4 hours and operation at minimum flow for 1 hour. This test may be witnessed by the Owner or Engineer or both at their option.

b. The Vendor shall also perform an overspeed test on the main pump to prove structural integrity at approximately 120 percent speed. The overspeed test shall be performed either with the rotor in the casing or separately. It is preferred that this test be run with rotor fully assembled; however, consideration will be given to overspeed testing of individual impellers.

c. Tests shall include dynamic monitoring of suction and discharge pressures to determine the magnitude and frequency of pressure pulses generated by the pump. Monitoring equipment shall be sufficiently responsive to detect pressure pulsations of as little as 1 percent and at a frequency of up to 30,000 hertz.

13.2 The water used for testing the pumps shall be clean shop or domestic water with no suspended solids in samples taken from the flow stream.

13.3 As a minimum, the following data shall be recorded:

a. Flow.

b. Discharge pressure.

c. Suction pressure.

d. Suction temperature.

e. Speed.

f. Vibration.

g. Seal water flow.

13.4 The Vendor shall notify the Owner of these tests at least 1 week before the test date so that the Owner or his representative may be present at the test site to observe such tests.

14.0 CLEANING, CORROSION PROTECTION, AND COATING

Parts shall be free from dirt, scale, and unwanted grease. The equipment shall be handled throughout production and packaging so that no foreign matter will be introduced into or onto the equipment and impair its operation.

Boiler feed pump rotor shall be secured for shipment so as to prevent any movement either axially or rotation.

15.0 MARKING AND IDENTIFICATION

15.1 Each package, skid, box and crate shall be marked on the outside with the following information so that it is readily visible:

a. (Owner's name)
(Project identification)
(Address)
(City, state, zip code)

b. Purchase Order number:

c. Weight:

d. Equipment Nos. as applicable:

15.2 Each unit shall be identified with a tag number. The number shall be permanently imprinted with at least 5mm (3/16") high letters on a 22-gage stainless steel tag. The tag shall be attached to the enclosure with pins of a similar material.

15.3 Each unit shall have a permanently secured data plate made from at least 22-gage stainless steel, permanently imprinted with 5mm (3/16") high letters, and containing the following information:

a. Manufacturer's name and address:

b. Model Number:

c. Serial Number:

d. Date of Manufacture:

e. Duty:

f. Weight:

15.4 The data plate shall be located where it is readily visible and shall be securely attached with pins of a material similar to the plate.

15.5 Equipment item numbers shall be utilized by the VENDOR in designating equipment. Numbers so assigned by the VENDOR may be reassigned at the option of the Engineer.

15.6 Items furnished under these specifications, but not identified herein, shall have tags inscribed as directed by the Engineer.

16.0 PACKAGING, SHIPPING AND STORAGE

16.1 All items shall be adequately crated, wrapped or otherwise protected so that shipment and delivery may be made without damage.

16.2 All flanges shall be protected by bolted-on wooden covers and all threaded openings shall be closed with caps or plugs.

16.3 A list and description of the contained material shall be plainly marked on the outside of each shipping container. All individual items shall be tagged.

16.4 Bolts, nuts, fittings and other small parts shall be separately boxed or packaged for shipment and properly tagged and identified.

16.5 Three copies of packing lists and shipping memoranda (special handling requirements, storage instructions, etc.) shall be mailed forty-eight hours before shipment is made. Packing lists shall include Vendor's mark number and Owner's tag number. Copies of shipping papers shall be mailed as follows (later):

16.6 Unless otherwise specified by the Vendor, storage of the equipment shall be outdoors. The Vendor shall inform the Owner of any special storage requirements sufficiently in advance of shipping of the equipment to allow for necessary preparation.

17.0 ACCEPTANCE CRITERIA

The Vendor shall comply with the following requirements before he submits the work for acceptance:

17.1 Submittal of ASME Data forms for coded items.

17.2 Submittal of Vendor drawing list.

17.3 Incorporation of all Owner and Owner's Engineer comments on Vendor drawings.

17.4 Completion of shop performance testing and completion and submittal of all test reports.

ATTACHMENT 1

Refer to Electrical Motor Specifications E-1 and E-2.

ATTACHMENT 2

Refer to Motor Data Sheets included in Electrical Motor Specifications E-1 and E-2.

ATTACHMENT 3

WATER CHEMISTRY

ph at 25°C (77°C)	8.9 - 9.2
Maximum dissolved solids, ppm	25
Maximum oxygen as O_2, ppm	0.1
Morpholine, ppm	2 - 6
Hydrazine, ppm	15-25
Maximum chlorides as CL-, ppm	1.0
Maxium flourides as F-, ppm	1.0

ATTACHMENT 4

MOTOR DRIVEN FEEDWATER PUMPS
EQUIPMENT DATA

The bidder shall return one copy of this form with each copy of his bid, with all blanks filled in.

1.	Bidder's Name		_____
2.	Manufactuer's Name		_____
3.	Quotation Number		_____
4.	Manufacturer's model number		_____
5.	Type		_____
6.	Number of stages		_____
7.	Capacity	tonnes/hr (lb/hr)	_____
8.	TDH at design conditions	m (ft)	_____
9.	Suction temperature	°C (°F)	_____
10.	Speed at design conditions	r/min	_____
11.	Required NPSH at design conditions	m (ft)	_____
12.	Shutoff head	m (ft)	_____
13.	Efficiency at design conditions	%	_____
14.	Size of suction connection	mm (in.)	_____
15.	Size of discharge connection	mm (in.)	_____
16.	Interstage bleed	kPa (psia)	_____
17.	Driver brake horsepower required at design conditions		_____
18.	Minimum recommended pump flow	tonnes/hr (lb/hr)	_____

ATTACHMENT 4

MOTOR DRIVEN FEEDWATER PUMPS
EQUIPMENT DATA
(Continued)

19.	Critical speed (1)	r/min	_____
20.	Critical speed (2)	r/min	_____
21.	Shaft stiffness	L^4/D^2	_____
22.	Initial clearances:		
	a. Wearing ring running clearance	mm (in.)	_____
	b. Shaft seal running clearance	mm (in.)	_____
23.	Static pump shaft deflection	mm (in.)	_____
24.	WR^2 of pump unit rotating	Kg/m^2 (lb/ft^2)	_____
25.	Performance test conditions:		
	a. Flow	tonnes/hr (lb/hr)	_____
	b. TDH	m (ft)	_____
	c. Suction temperature	°C (°F)	_____
	d. Driver brake horsepower	kw (BHP)	_____
	e. Flow measuring device		_____
	f. List of test data to be recorded, including required NPSH if recorded		_____
			_____
			_____
26.	Pump thrust loading:		
	a. Design conditions		_____
	b. Maximum		_____

ATTACHMENT 4

MOTOR DRIVEN FEEDWATER PUMPS
EQUIPMENT DATA
(Continued)

27. Weights:

a.	Pump	Kg (lb)	_____
b.	Baseplate, couplings, and other parts	Kg (lb)	_____
c.	Total, each pump	Kg (lb)	_____

28. Seal water requirement at 46°C (115°F), liters/sec (gal/min) at load and on standby _____ / _____

29. Materials:

a.	Inner casing	_____
b.	Outer casing	_____
c.	Impellers	_____
d.	Wearing rings	_____
e.	Shaft	_____
f.	Shaft sleeves	_____
g.	Gaskets or seals	_____
h.	Allowable pH range	_____

30. Type of bearings _____

31. Breakdown orifices:

a. Warmup:

(1)	Flow	tonnes/hr (lb/hr) _____
(2)	Size	mm (in.) _____

ATTACHMENT 4

MOTOR DRIVEN FEEDWATER PUMPS
EQUIPMENT DATA
(Continued)

b. Balancing Drum:

(1) Flow — tonnes/hr (lb/hr) _____

(2) Size — mm (in.) _____

32. Lubricating oil requirements:

a. Quantity — tonnes/hr (lb/hr) _____

b. Supply temperature — °C (°F) _____

c. Return temperature — °C (°F) _____

d. Pressure required — kPa (psia) _____

33. Coupling:

a. Manufacturer and model number or type _____ / _____

b. Maximum speed — r/min _____

c. Rated horsepower and service factor _____ / _____

34. Maximum allowable moments of pump nozzles at zero force — joules (ft-lb) _____

35. Maximum allowable force on pump nozzles at zero moments — Kg (lb) _____

36. Description and weights of components to be field assembled _____ / _____

_____ / _____

_____ / _____

ATTACHMENT 4

MOTOR DRIVEN FEEDWATER PUMPS
EQUIPMENT DATA
(Continued)

37. Itemized description of recommended spare parts _____

38. List of tools which will be furnished with the equipment _____

39. Recommended suction strainer screen mesh opening mm (in.) _____

40. List of special test instruments to be furnished by the Vendor that will be required for installation of his equipment, start-up and initial operation _____

ATTACHMENT 5

SPECIFICATION EXCEPTIONS

GILBERT/COMMONWEALTH

The Bidder certifies that the bid is complete and in absolute agreement with the requirements of this Specification, except as specifically stated below. (Use additional sheets if required.)

_____
(BIDDER'S NAME)

_____
(MANUFACTURER'S NAME)

_____
(QUOTATION NUMBER)

Attest: _____
(SIGNATURE)

_____
(TITLE)

ATTACHMENT 6

ACOUSTIC DATA
SUMMARY SHEET

MOTOR DRIVEN BOILER FEED PUMPS

Octave Band Geometric Mean Frequency (Hertz)	Equipment Without Acoustic Treatment or Guarantee	Equipment With Maximum Sound Level Guarantee of 90 dBA at 1 meter (3 feet)
63	_____	_____
125	_____	_____
250	_____	_____
500	_____	_____
1000	_____	_____
2000	_____	_____
4000	_____	_____
8000	_____	_____

Kind of levels given, indicate which of the following:

Sound Power Levels re 10 (exp -12) watt	_____	_____
Sound Pressure Levels re 2x10 (exp -4) microbars	_____	_____

If sound pressure levels are given, indicate both of the following:

Weighting network use A, B, C, or Linear (None)	_____	_____
Distance to sound source Feet or Meters	_____	_____

Vendor Comments: _____

_____

_____

_____

LAKHRA POWER FEASIBILITY STUDY

SPECIFICATION M-8

CONDENSATE PUMPS

LPS/2B1477/D2

110

SPECIFICATION M-8

FOR
CONDENSATE PUMPS

TABLE OF CONTENTS

		PAGE
1.0	DESCRIPTION OF WORK	1
2.0	WORK INCLUDED	1
3.0	WORK NOT INCLUDED	1
4.0	APPLICABLE CODES, STANDARDS AND REGULATORY REQUIREMENTS	2
5.0	SUPPLEMENTAL DATA	2
6.0	VENDOR DATA	2
7.0	DESIGN REQUIREMENTS	3
8.0	PERFORMANCE REQUIREMENTS	5
9.0	MATERIAL REQUIREMENTS	5
10.0	FABRICATION AND ASSEMBLY REQUIREMENTS	6
11.0	INSTALLATION REQUIREMENTS (NONE)	6
12.0	PERSONNEL REQUIREMENTS	6
13.0	INSPECTIONS AND TESTS	6
14.0	CLEANING, CORROSION PROTECTION AND COATING	7
15.0	MARKING AND IDENTIFICATION	7

TABLE OF CONTENTS
(Continued)

		PAGE
16.0	PACKAGING, SHIPPING AND STORAGE	8
17.0	ACCEPTANCE CRITERIA	9

ATTACHMENTS

1. Condensate Pumps System Head Curve
2. Heat Balance Data
3. Proposed Condensate Pump Suction
4. Condensate Pumps Design Data
5. Condensate Pumps Specification Summary Sheets
6. Motor Specification
7. Motor Data Sheet
8. Acoustic Data Sheet

LAKHRA POWER FEASIBILITY STUDY
TECHNICAL SPECIFICATION M-8
CONDENSATE PUMPS

1.0 DESCRIPTION OF WORK

The work to be performed consists of designing, fabricating, and delivering to the jobsite three condensate pumps, motors, and accessories. The pumps shall be vertical type direct driven by electric motors supplied by the Vendor.

The pumps will be used at two 350 MW power plants for the Water and Power Development Authority (WAPDA) to be located in Pakistan.

2.0 WORK INCLUDED

2.1 The following pumps and accessories shall be provided for each unit:

2.1.1 Three vertical turbine type direct drive condensate pumps.

2.1.2 Electric motor drives.

2.1.3 Fabricated steel support bases for motor drive. The pump manufacturer shall coordinate with motor vendor to assure a base compatible for reed critical frequency design.

2.1.4 Fabricated steel suction can per Attachment 3.

2.1.5 Suitable rigid adjustable couplings for connection to the vertical solid shaft motors.

2.1.6 Coupling guards.

2.1.7 The Vendor shall supervise and be responsible for installation, alignment and trouble-free operation of the motor and the driven equipment assembly.

3.0 WORK NOT INCLUDED

3.1 Wiring, piping

3.2 Motor starters and controls and all external wiring and conduit.

3.3 Foundations and anchor bolts.

4.0 APPLICABLE CODES, STANDARDS, AND REGULATORY REQURIEMENTS

4.1 All materials shall be in accordance with ASTM Specifications. Any exceptions will be subject to approval of the Buyer.

4.2 The pumps shall be furnished in accordance with the latest Hydraulic Institute Standards.

4.3 Anti-Friction Bearing Manufacturer's Association (AFBMA)

4.4 ANSI S1.2 "Methods for the Physical Measurements of Sound"

4.5 National Electrical Manufacturer's Association (NEMA)

4.6 ASME Boiler and Pressure Vessel Code, Section IX

4.7 Occupational Safety and Health Administration Standards, Part 910

4.8 Application of codes and standards referenced herein requires the application of the latest issue date and of all addenda adopted as of the date of the purchase order. Later revisions may be involved only by mutual agreement between Purchaser and Vendor.

5.0 SUPPLEMENTAL DATA

The documents listed on the contents page as attachments are applicable to the work to the extent specified herein.

6.0 VENDOR DATA

6.1 Vendor data shall be furnished in accordance with the requirements indicated on the attached Vendor Data Requirements and Submittal Schedule.

6.2 Vendor shall furnish Certified Vendor Drawings, and include a list of drawings by category, such as general arrangement, foundation data, and electrical connection. If titles of the Certified Vendor Drawings are unknown, bidder shall submit the estimated number of drawings he will submit in each category.

6.3 The Vendor shall provide (No. ___) copies of an instruction book covering all equipment being furnished. The instruction book shall have hard front and back covers and have proper identification on the front cover as to contents.

6.4 Instruction books are not considered design manuals, and if any discrepancies arise between the Vendor's drawings and

instruction books, or items omitted from the drawings which are contained in the instruction book recommendations, the Vendor shall amend the instruction books or shall modify the installation at his own expense, whichever is deemed by the Owner as giving the most proper and operative final installation.

6.5 PERFORMANCE TEST REPORTS AND CERTIFICATIONS

The following performance reports and certifications shall be submitted to the Owner prior to acceptance of the Work:

a. Certified copies of all shop test data shall be forwarded to the Engineer for later distribution to the Owner, including:

   1. Certified copies of material test reports.

   2. Certified reports of nondestructive examination performed.

b. The Vendor shall furnish procedures and instructions for a field isntallation and all required start-up tests and instruction books for the equipment being furnished.

6.6 SPECIAL TOOLS AND SPARE PARTS

6.6.1 The Vendor shall supply the following:

One set of any special tools required to operate and maintain his equipment. All tools shall be identified by name and number, and this number shall appear on drawings and instructions to indicate application of the tools furnished and to permit the ordering of replacement tools.

6.6.2 The Vendor shall supply, with his proposal, pricing for 1 and 5 year supplies of spare parts.

7.0 <u>DESIGN REQUIREMENTS</u>

7.1 All equipment furnished under these Specifications shall conform in all respects to the Centrifugal Pump Standards of the Hydraulic Institute Standards.

7.2 The condensate pumps shall be designed to operate in conjunction with a two pass, one zone, transverse condenser, and the Purchaser's power cycle as shown on the attached heat balance diagram, Figure 2, Attachment 2, and the condensate system head curve shown on Figure 1, Attachment 1.

7.3 Each pump shall be of the vertical turbine type and shall be complete with a suction can. The discharge flange shall be located on the discharge head and the suction flange on the suction can.

7.4 The condensate pumps shall have a constantly rising head curve from the design point to shutoff and shall be designed for single speed motor operation. Shutoff head shall be not less than 120 percent and not more than 130 percent of Design Total Developed Head.

7.5 The total capacity and total head are given in Attachment 4. The minimum NPSH required at the pump mounting flange shall be sufficient to enable the pump to operate singularly against the system head curve.

7.6 Condensate pumps together with their motor drives shall be suitable for one pump operation and for operation with three pumps in parallel, intermittently and/or continuously without incidence of surging, excessive vibration, or other deleterious operating conditions.

7.7 The condensate pumps shall be furnished with mechanical seals complete with cooling coils.

7.8 The condensate pump suction connections shall be located below the pump mounting flange as shown on Attachment 3 "Proposed Condensate Pump Suction."

7.9 The condensate pumps shall be designed to permit full voltage starting of driving motors.

7.10 Motors shall be supplied by the Vendor and shall be in accordance with the attached Motor Specifications, Attachment 6 and Motor Data Sheet, Attachment 7.

7.11 The motor mounting, frame stator support, stator and any other supporting structure shall not distort to cause a rotor rub with the smallest recommended air gap reduced by 50 percent during a full voltage, full load start. The loading of the bearings shall not cause a wipe under the same conditions.

7.12 ACOUSTIC REQUIREMENTS

7.12.1 The Vendor shall submit as part of his proposal a tabulation of octave band sound power levels in accordance with 7.12.3 below for the equipment being quoted without acoustic treatment or guarantee. The proposal shall be considered incomplete without this information.

7.12.2 The Vendor shall submit as part of his proposal an additional price for a guaranteed maximum sound level of 90 dba (90 decibels, a network weighted) when measured with a Type I precision sound level meter at slow response and at a distance of 1 meter (3 feet) in any direction from the nearest surface of the equipment. The Vendor shall also submit with his proposal a tabulation of octave band sound power levels in accordance with 7.12.3 below for the equipment in the sound attenuated condition.

7.12.3 The Vendor shall complete and submit as part of his proposal the attached Acoustic Data Summary Sheet (Attachment 8). It is preferred that the octave band levels be sound power levels in decibels with a reference power of 10 (exponent 12) watt. However, sound pressure levels in decibels with a reference pressure of 0.0002 microbars will be acceptable providing the weighting network and distance to the sound source are indicated. In the event acoustic data for the equipment quoted is not available, acoustic data for similar equipment will be acceptable. However, the equipment difference should be indicated and the Vendor's estimate of the acoustical effect of these differences should be indicated.

8.0 PERFORMANCE REQUIREMENTS

8.1 The Vendor shall guarantee that the total developed head of the condensate pumps shall not be less than that stated in Item 4, Attachment 4 and not more than 3 percent above this figure at the specified capacity, suction pressure, water temperature and pump speed.

8.2 The Vendor shall guarantee the design efficiency at design speed.

8.3 The Vendor shall guarantee that each single condensate pump and motor combination shall be capable of operating alone at the runout point for indefinite time periods without cavitation or any other deleterious effects. The runout point shall be defined by the point of intersection of the system head curve and the single pump curve.

8.4 The minimum NPSH required at the pump mounting flange shall be sufficient to enable the pump to operate singularly against the system head curve, Attachment 1.

9.0 MATERIAL REQUIREMENTS

Pump materials shall be as recommended by the Vendor to best meet the Owner's service requirements but in no case inferior to the materials recommended in the Hydraulic Institute

Standards. No copper bearing materials shall be used for condensate wetted parts. All material shall be approved by the Purchaser's Engineer before fabrication.

10.0 FABRICATION AND ASSEMBLY REQUIREMENTS

10.1 All welding procedures shall be qualifed in accordance with Section IX ASME Boiler and Pressure Vessel Code and shall be approved by the Purchaser's Engineer before fabrication.

10.2 The pumps shall be manufactured in accordance with the latest Hydraulic Institute Standards.

11.0 INSTALLATION REQUIREMENTS

None

12.0 PERSONNEL REQUIREMENTS

12.1 The Vendor shall include supervision of installation and the startup engineering services priced separately in his proposal.

12.2 All welders shall be qualified under ASME Boiler and Pressure Vesel Code, Section IX.

13.0 INSPECTIONS AND TESTS

The following inspections and tests shall be performed.

13.1 The equipment covered by this Specification shall be subject to inspection by the Purchaser and the Owner during fabrication, construction, testing, and prior to shipment.

13.2 Hold point shall be defined as a check point in a sequential operation at which certain data are taken, inspections made, or approval required before the next sequential step can be taken.

13.3 Inspection and test plan shall be defined as a listing, with optimum sequencing, of all the inspections and test required to be performed for a specific item, component, structure or system.

13.4 Shop performance tests conducted to establish guaranteed performance shall be proposed and carried out by the Vendor in accordance with the methods and procedures outlined in the latest applicable ASME Test Code for Centrifugal Pumps (PTC 8.2) and applicable publications and as mutually agreed between Owner and Vendor. Vendor shall submit, within 4 weeks after

award, testing procedures for approval by the Purchaser's Engineer.

13.5 The shop performance tests shall be conducted with each pump and motor assembly to demonstrate:

a. Total head produced by the pump.

b. The capacity, or rate of flow.

c. Power input to the pump.

d. Efficiency.

e. Suction requirements of the pump, including cavitation characteristics.

13.6 The Vendor shall provide a qualified Engineer to supervise and conduct the test, and submit a complete report of the test. Vendor shall conduct tests on first and second pump and motor assemblies in accordance with Vendor's schedule and without interruption. The Vendor shall notify the Owner 10 days prior to conducting of the test on the third pump and motor assembly so that the Owner may send a representative to observe the test if desired.

14.0 CLEANING, CORROSION PROTECTION, AND COATING

The equipment shall be free of all rust, scale, oil, or other foreign material before shipment. All carbon steel external unmachined surfaces shall be shop primed in accordance with the Vendor's standard. All unpainted or machined surfaces shall be adequately protected to prevent corrosion during shipment and storage.

15.0 MARKING AND IDENTIFICATION

15.1 Each package, skid, box and crate shall be marked on the outside with the following information so that it is readily visible:

a. (Owner's name)
(Project identification)
(Address)
(City, state, zip code)

b. Purchase Order Number

c. Weight:

d. Equipment Nos. as applicable:

15.2 Each unit shall be identified with a tag number. The number shall be permanently imprinted with at least 5mm (3/16") high letters on a 22 gage stainless steel tag. The tag shall be attached to the enclosure with pins of a similar material.

15.3 Each unit shall have a permanently secured data plate made from at least 22 gage stainless steel, permanently imprinted with 5mm (3/16") high letters, and containing the following information:

a. Manufacturer's name and address:

b. Model Number:

c. Serial Number:

d. Date of Manufacture:

e. Duty:

f. Weight:

15.4 The data plate shall be located where it is readily visible and shall be securely attached with pins of a material similar to the plate.

15.5 Equipment item numbers shall be utilized by the Vendor in designating equipment. Numbers so assigned by the Vendor may be reassigned at the option of the Engineer.

15.6 Items furnished under these specifications, but not identified herein, shall have tags inscribed as directed by the Engineer.

16.0 PACKAGING, SHIPPING, AND STORAGE

All tube connections, suction and discharge nozzles shall be temporarily sealed to prevent entry of foreign material during shipment. The equipment shall be properly crated to prevent damage during shipping and storage.

17.0 ACCEPTANCE CRITERIA

The Vendor shall ensure that he has complied with the following requirements before submitting the work for acceptance:

17.1 Submittal of pump performance reports and certified pump curves.

17.2 Submittal of all Vendor data required per Specification Summary Sheets 1-4 Attachment 5, Acoustic Data Summary Sheet Attachment 8, and Motor Data Sheet Attachment 7.

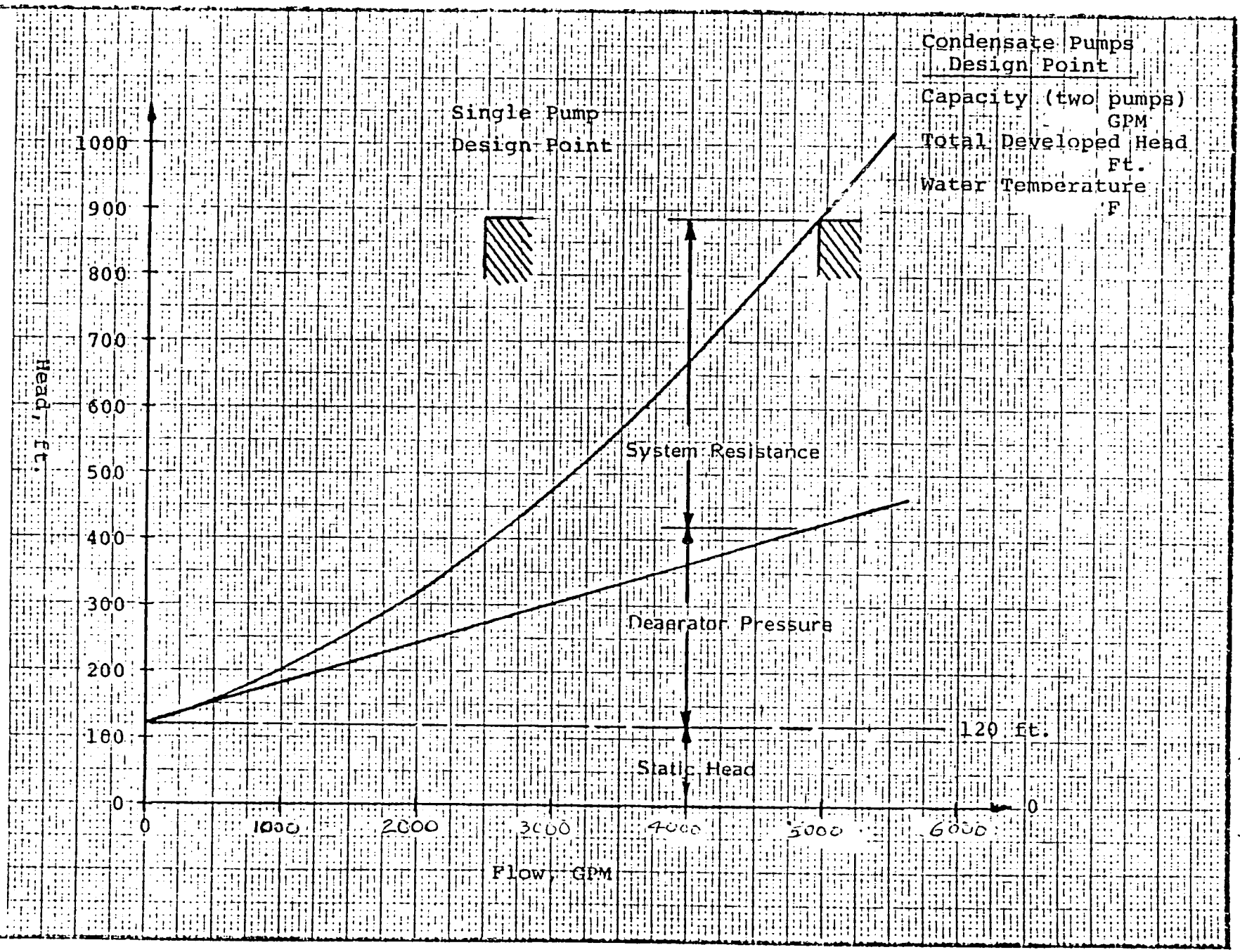

JMB

PREPARED UNDER RESPONSIBLE SUPERVISION OF

APP.

DATE

OWNER

AT OFFICES OF
COMMONWEALTH ASSOCIATES, INC
109 E. WASHINGTON AVE. JACKSON, MICH

Condensate Pumps
System Head Curve

NO.

SH.

A&E 17 0153 8-70.

12

GUARANTEED – 11.85 kPa, 3% MU, TC2F

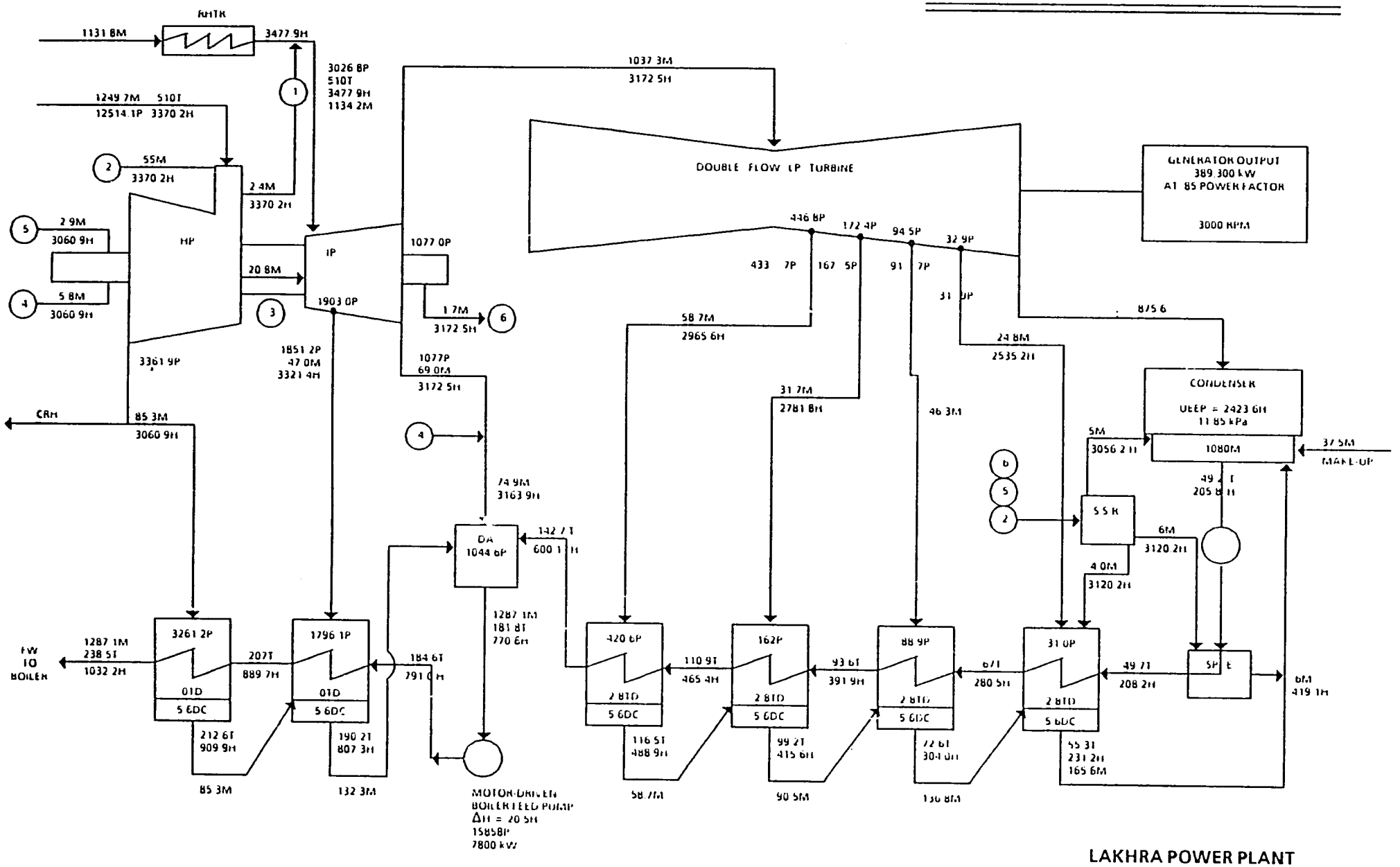

GROSS HEAT RATE = 8717 kj/kWh
(Heat Rate may vary depending on the T/G Vendor Selected)

M – Flow – tonnes/hr
P – Pressure – kPa
H – Enthalpy – kj/kg
T – Temperature – °C

LAKHRA POWER PLANT
FEASIBILITY STUDY
TYPICAL PRELIMINARY TURBINE HEAT BALANCE
SI UNITS
G/C II 11/12/85 HB-1

(2)

B1619-4/GF#72

VWO – NP – 8.47 kPa, 0.5% MU, TC2F

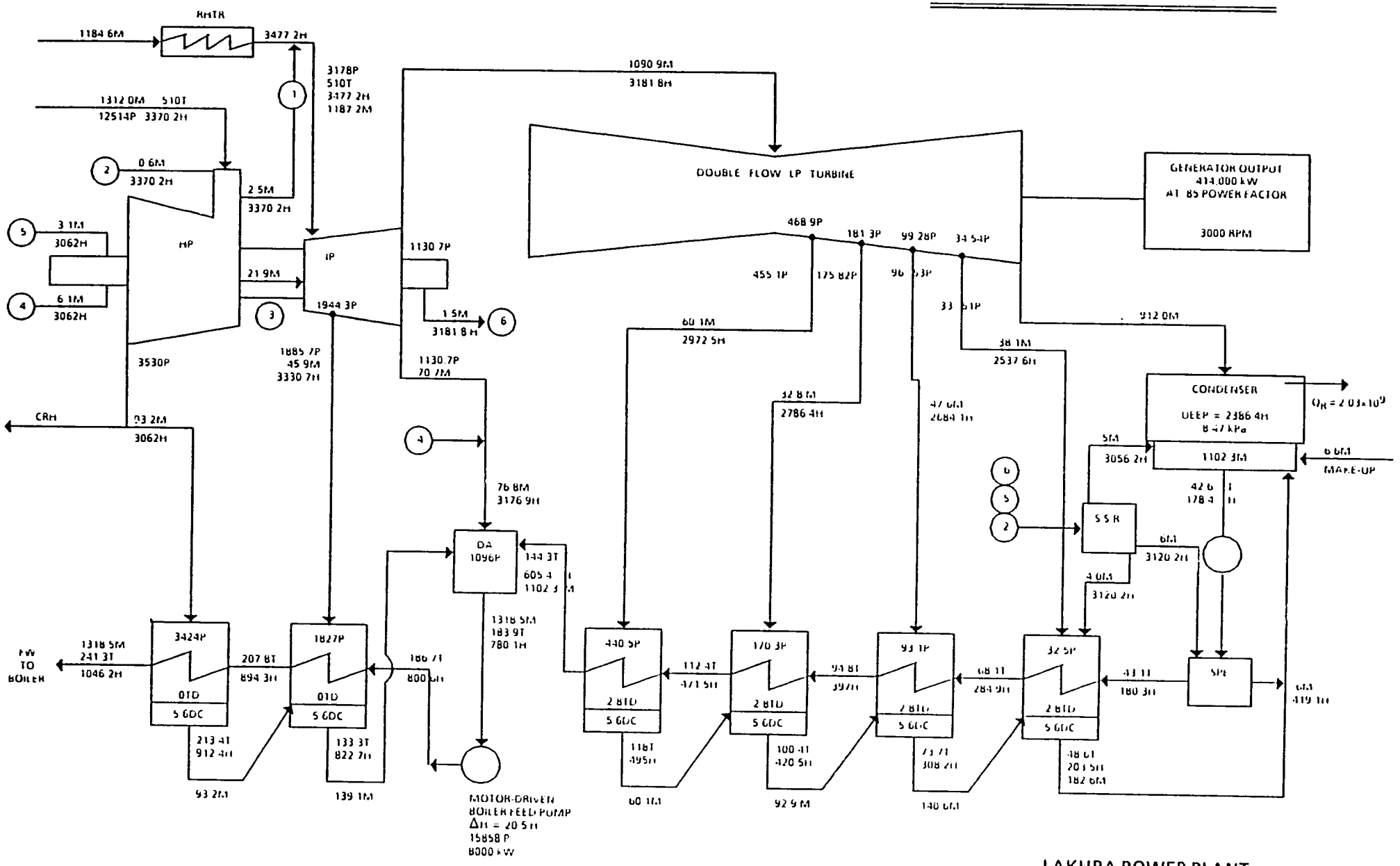

GROSS HEAT RATE = 8554 kj/kWh
(Heat Rate May Vary Depending
on T/G Vendor Selected)

M – Flow – tonnes/hr
P – Pressure – kPa
H – Enthalpy – kj/kg
T – Temperature – °C

LAKHRA POWER PLANT
FEASIBILITY STUDY
TYPICAL PRELIMINARY TURBINE HEAT BALANCE
SI UNITS
G/C II 11/12/85 HB-2

B1619-2/GF#72

GUARANTEED – 3.5" HgA, 3% MU, TC2F

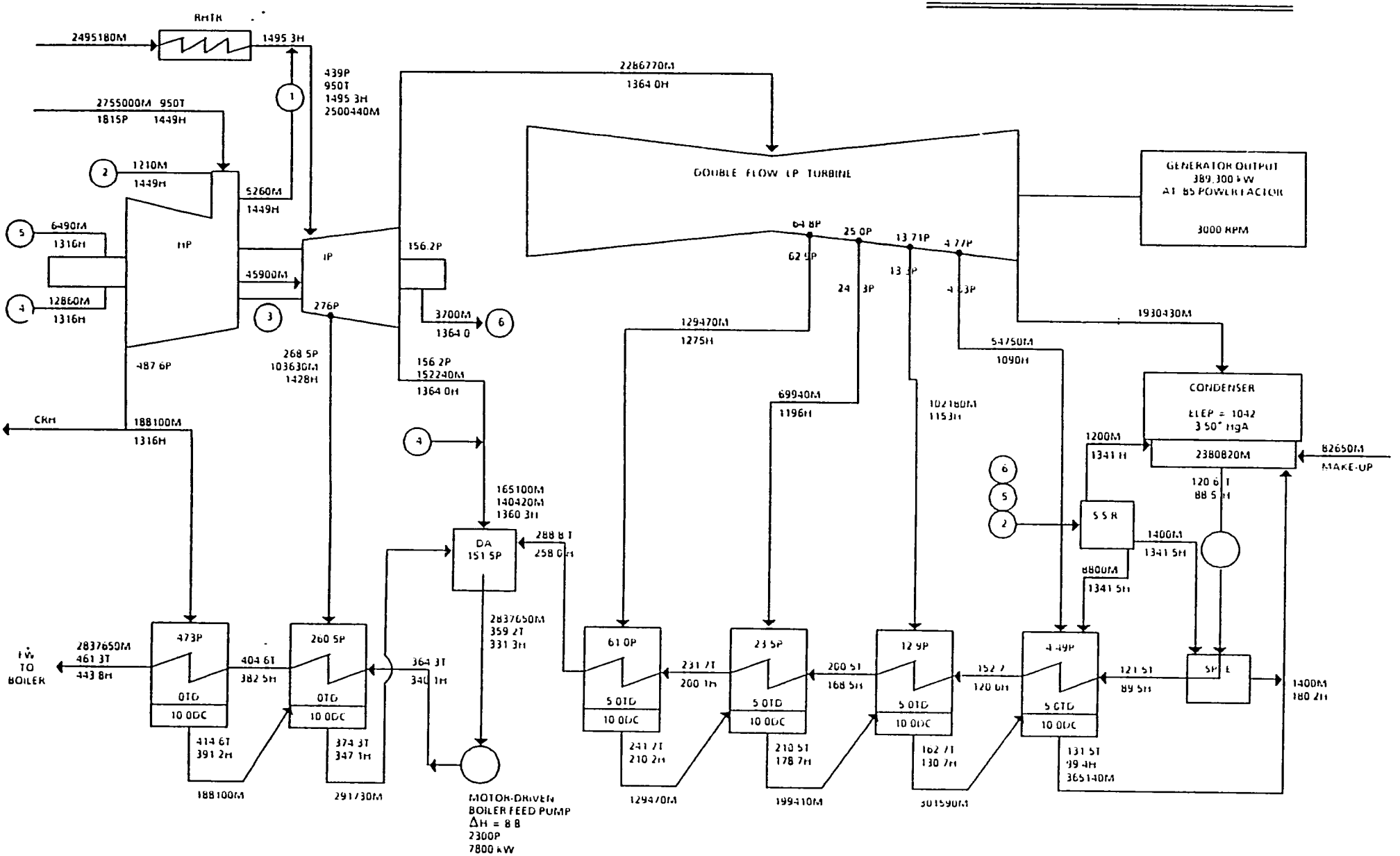

GROSS HEAT RATE = 8263 Btu/kWh
(Heat Rate may vary depending on the T/G Vendor Selected)

M – Flow – lbs/hour
P – Pressure – psia
H – Enthalpy – Btu/lb
T – Temperature – ° F

LAKHRA POWER PLANT
FEASIBILITY STUDY
TYPICAL PRELIMINARY TURBINE HEAT BALANCE
ENGLISH UNITS
G/C II 11/12/85 HB-1

B1619-3/GF#72

VWO – NP – 2.5" HgA, 0.5% MU, TC2F

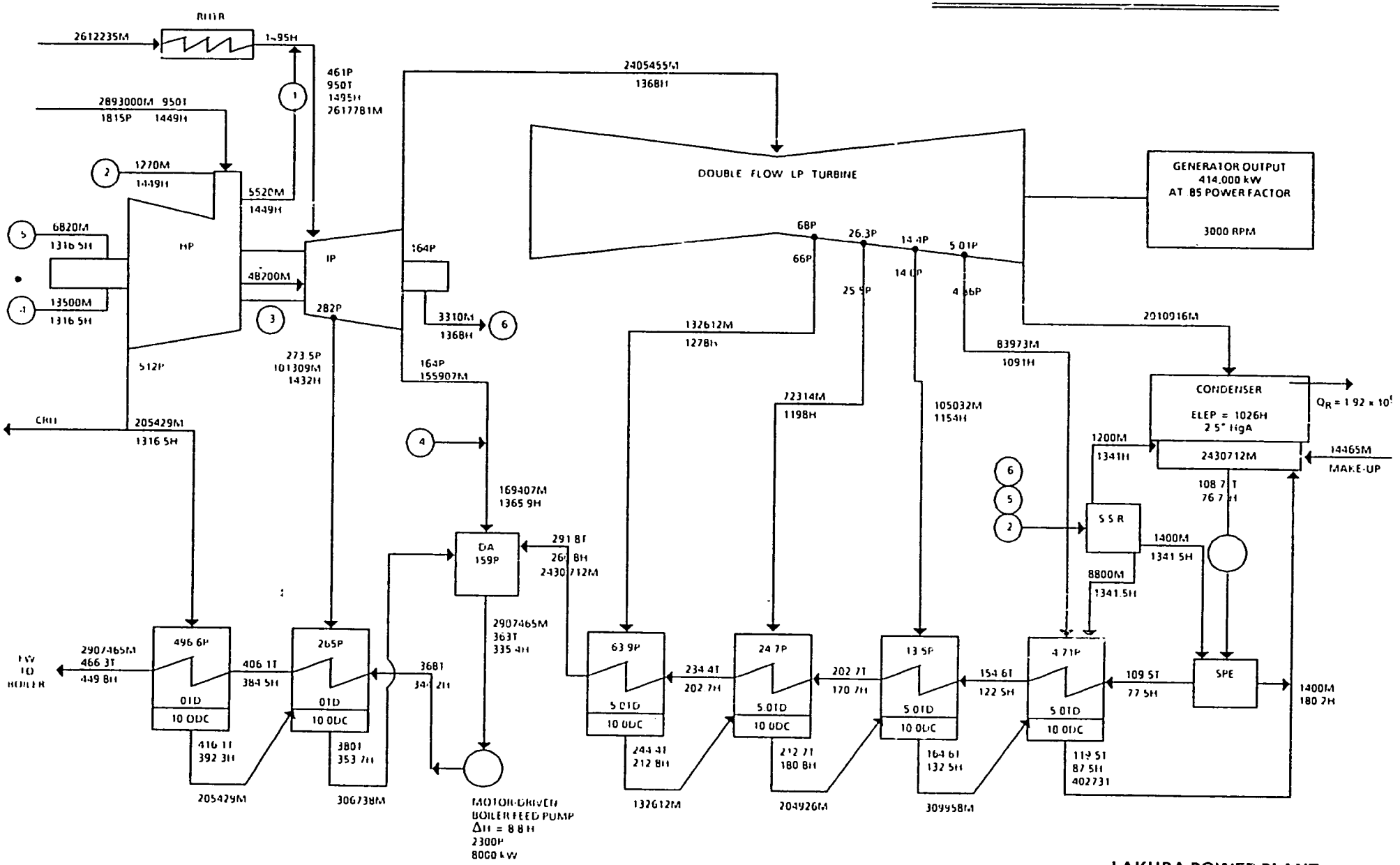

GROSS HEAT RATE = 8108 Btu/kWh
(Heat Rate may vary depending on the T/G Vendor Selected)

M – Flow – lbs/hour
P – Pressure – psia
H – Enthalpy – Btu/lb
T – Temperature – ° F

LAKHRA POWER PLANT
FEASIBILITY STUDY
TYPICAL PRELIMINARY TURBINE HEAT BALANCE
ENGLISH UNITS
G/C II 11/12/85 HB-2

1619-1/GF#72

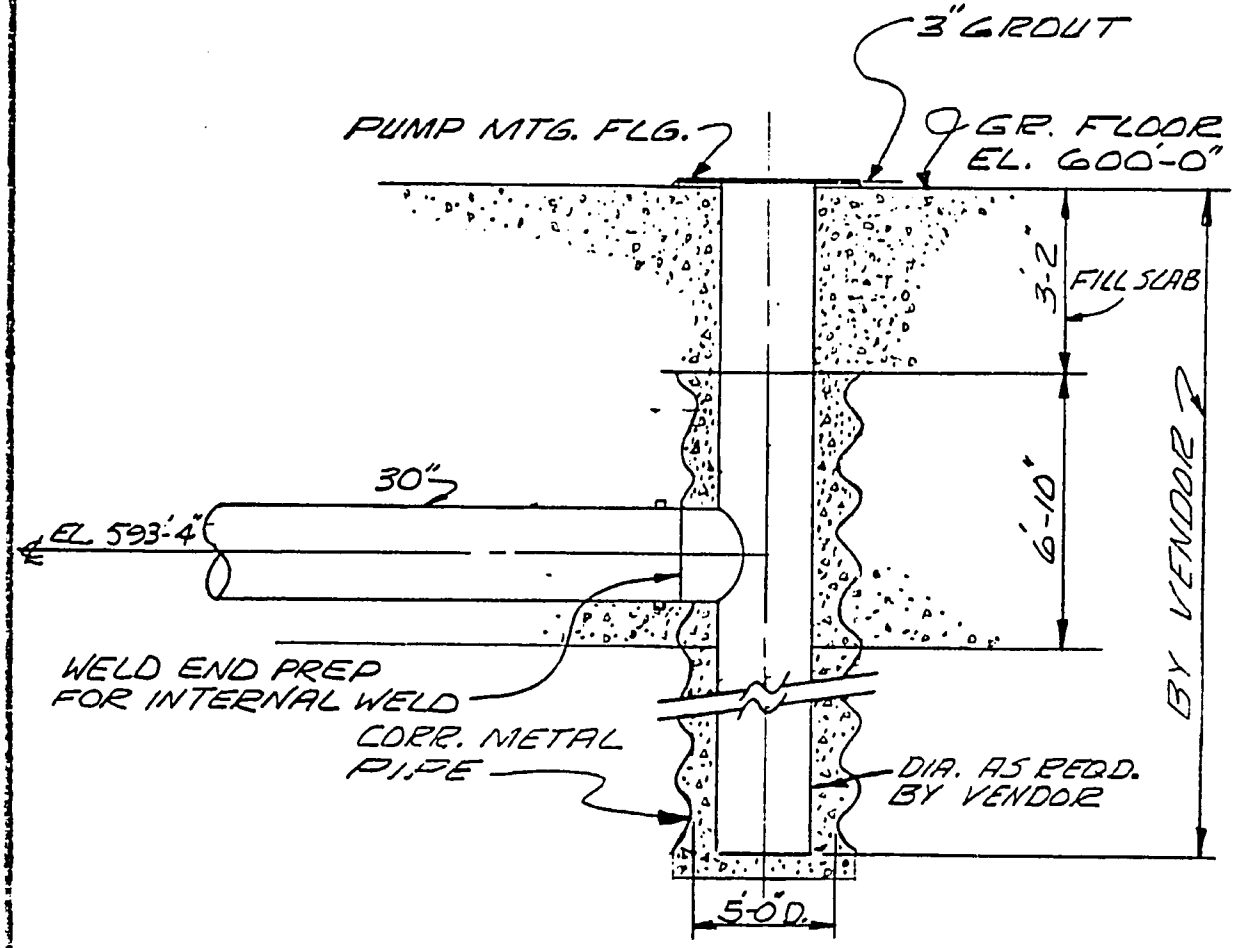

	L.L.Y.	
AT OFFICES OF COMMONWEALTH ASSOCIATES INC.	OWNER	TITLE PROPOSED CONDENSATE PUMP SUCTION
	JOB NO.	DWG. NO. SH REV

INSP'D BY					PRINTS SENT OUT	AP					

ATTACHMENT 4

CONDENSATE PUMPS

DESIGN DATA

Design Data for Each Unit

1.	Number of Pumps Required	3 (50% capacity)
2.	Design Capacity - each pump (Water at 42.6°C) (108.7°F)	154.5 l/s (2,450 gpm)
3.	Design Total Developed Head	271/m (890 ft)
4.	Normal Suction Pressure at Pump Mounting Flange	5.3 kPa (.77 psia)
5.	NPSH Available at Pump Mounting Flange	.55 m (1.8 ft)
6.	System Head Curve	Attachment 1
7.	Heat Balance Diagram	Attachment 2
8.	Condensate Pump Suction	Attachment 3

ATTACHMENT 5

CONDENSATE PUMPS
SPECIFICATION SUMMARY SHEETS

Manufacturer _____

Proposal No. _____

Manufacturer's pump designation and size _____

Design Capacity l/s (gpm) _____

Design Total Developed Head, m (ft) _____

Brake horsepower at design conditions, kw (hp) _____

Brake horsepower at run-out condition, kw (hp) _____

Efficiency at design capacity, design T.D.H. and design speed, % _____

Shutoff head at design speed, m (ft) _____

Rise in design head to shutoff, % _____

Minimum NPSH required at pump mounting flange at design conditions, m (ft) _____

Suction Specific Speed _____

Minimum flow at design rpm, l/s (gpm) _____

Suction, Double, or Single _____

Number of Stages _____

Arrangement of impellers (in-line, opposed) _____

Balancing accomplished by (method) _____

Impellers installed on shaft by (keyed, shrink fit, etc.) _____

Interchangeable impellers (Yes or No) _____

Type of bearing lubrication _____

ATTACHMENT 5
SUMMARY SHEETS (Cont'd)

Materials	Description	ASTM Designation
Outer Casing	_____	_____
Inlet Casing	_____	_____
Lower Bearing	_____	_____
Impeller, first stage	_____	_____
Bowl and guide vane, first stage	_____	_____
Guide vane bearing, first stage	_____	_____
Impellers, intermediate stages	_____	_____
Bowl and guide vane, intermediate stages	_____	_____
Guide vane bearings, intermediate stages	_____	_____
Impeller, last stage	_____	_____
Bowl and guide vane, last stage	_____	_____
Guide vane bearing, last stage	_____	_____
Shaft	_____	_____
Fabricated Steel Pump Suction Can	_____	_____

First/second/third critical speeds (approx) _____

Shaft diameter at impellers, mm (in) _____

ATTACHMENT 5
SUMMARY SHEETS (Cont'd)

Shaft diameter at bearings, mm (in) _____

Shaft length, kg (lb) _____

Distance between bearing center lines, mm _____

Radial clearance under static conditions on wearing rings, mm (in) _____

Suction nozzle size, mm (in) _____

Discharge nozzle _____

Size, mm (in) _____

Flange Class _____

Weight of pump only, kg (lb) _____

Weight of pump and outer casing, kg (lb) _____

Weight of pump and motors, kg (lb) _____

Wet Impeller WR^2 of driven equipment, $kg\text{-}m^2$ ($lb\text{-}ft^2$) _____

Speed vs torque curve - discharge valve closed _____

Speed vs torque curve - discharge valve open _____

Thurst to be carried by Vendor's motor thrust bearing

1. Normal operating conditions

   a. Maximum continuous thrust, kg (lb) _____

   b. Direction (up or down) _____

2. Starting conditions - discharge valve open

   a. Maximum momentary thrust, kg (lb) _____

   b. Direction (up or down) _____

ATTACHMENT 5
SUMMARY SHEETS (Cont'd)

3. Starting conditions - discharge valve closed

   a. Maximum momentary thrust, kg (lb) _____

   b. Direction (up or down) _____

4. Stopping or shutting down conditions

   a. Maximum momentary thrust, kg (lb) _____

   b. Direction (up or down) _____

Manufacturer (Coupling) _____

Type _____

Model No. _____

Journal bearings (pump)

Number _____

Estimated life _____

Estimated time to obtain from manufacturer and replace new bearing _____

Material specification _____

Bearing housing - material _____

- thickness _____

- liner _____

Seal Leakage

Normal operating condition _____

Standby condition _____

ATTACHMENT 6

Refer to Electrical Motor Specifications E-1 and E-2.

ATTACHMENT 7

Refer to Motor Data Sheets included in Electrical Motor Specifications E-1 and E-2.

ATTACHMENT 8

ACOUSTIC DATA
SUMMARY SHEET

CONDENSATE PUMPS

Octave Band Geometric Mean Frequency (Hertz)	Equipment Without Acoustic Treatment or Guarantee	Equipment With Maximum Sound Level Guarantee of 90 dBA at 1 meter (3 feet)
63	_____	_____
125	_____	_____
250	_____	_____
500	_____	_____
1000	_____	_____
2000	_____	_____
4000	_____	_____
8000	_____	_____

Kind of levels given, indicate which of the following:

Sound Power Levels re 10 (exp -12) watt	_____	_____
Sound Pressure Levels re 2x10 (exp -4) microbars	_____	_____

If sound pressure levels are given, indicate both of the following:

Weighting network use A, B, C, or Linear (None)	_____	_____
Distance to sound source Feet or Meters	_____	_____

Vendor Comments: _____

_____

_____

_____

LAKHRA POWER FEASIBILITY STUDY

SPECIFICATION M-9

CIRCULATING WATER PUMPS

LPS/B1132/D1

136

SPECIFICATION M-9

CIRCULATING WATER PUMPS

TABLE OF CONTENTS

Article	Title	Page
1.0	DESCRIPTION OF WORK	1
2.0	WORK INCLUDED	1
3.0	WORK NOT INCLUDED	1
4.0	APPLICABLE CODES, STANDARDS, AND REGULATORY REQUIREMENTS	2
5.0	SUPPLEMENTAL DATA	2
6.0	VENDOR DATA	2
7.0	DESIGN REQUIREMENTS	4
8.0	PERFORMANCE REQUIREMENTS	6
9.0	MATERIAL REQUIREMENTS	6
10.0	FABRICATION AND ASSEMBLY REQUIREMENTS	7
11.0	INSTALLATION REQUIREMENTS (NONE)	7
12.0	PERSONNEL REQUIREMENTS	7
13.0	INSPECTIONS AND TESTS	7
14.0	CLEANING, CORROSION PROTECTION, AND COATING	8
15.0	MARKING AND IDENTIFICATION	8
16.0	PACKAGING, SHIPPING, AND STORAGE	9
17.0	ACCEPTANCE CRITERIA	10

SPECIFICATION M-9

CIRCULATING WATER PUMPS

TABLE OF CONTENTS
(Continued)

ATTACHMENTS

1. List of Drawings (Not Included)
2. System Head Curves (Not Included)
3. Tagging List (1 page)
4. Pump Specification Sheets including Water Analysis
5. Equipment Data Form (9 pages)
6. Equipment Specification Exceptions Form (1 page)
7. Acoustic Data Summary Sheet
8. Vendor Data Requirements and Submittal Schedule (1 page) (Later)
9. Motor Specification
10. Motor Data Sheet

SPECIFICATION M-9

CIRCULATING WATER PUMPS

1.0 DESCRIPTION OF WORK

1.1 The Work to be performed consists of designing, fabricating, testing, and delivering to the jobsite circulating water pumps for two 350 MW power plants for the Water and Power Development Authority of Pakistan (WAPDA).

1.2 The circulating water pumps will take suction from a cooling tower basin. The pump pits or pumphouses will be designed to meet the pump requirements.

2.0 WORK INCLUDED

The Work shall include at least the following for each unit:

a. Two nominal 6.44 cumecs (102,125 gpm) capacity, horizontal circulating water pumps designed for runout conditions of single pump operation, as determined from the attached System Head Curves, Attachment 2.

b. Steel mounting base for pump and motor.

c. Services of a qualified field representative to coordinate the installation of the equipment and assist during start-up and initial operation.

d. Pump performance testing.

e. Constant speed motor drives.

3.0 WORK NOT INCLUDED

The following items are not included in the requirements of this section, but will be accomplished by others:

a. Pump discharge piping, valves, and expansion joints.

b. Foundation and anchor bolts.

c. External cooling and sealing water piping.

d. Unloading and field erection.

4.0 APPLICABLE CODES, STANDARDS, AND REGULATORY REQUIREMENTS

Design, materials, manufacture, installation, examination, testing, inspection, and documentation shall conform to the applicable portions of the following specifications, codes, and standards, including case rulings, interpretations, and addenda as applicable in force at the time of issue of this Specification:

a. Pumps specified herein shall be designed and manufactured in accordance with the Hydraulic Institute (HI) Standards.

b. Materials used in the fabrication and manufacture of the pumps shall be in accordance with American Society for Testing and Materials (ASTM) standards.

c. Nuts, bolts, and other standardized items shall conform to American National Standards Institute (ANSI) standards. Flanged connections shall be faced and drilled in accordance with ANSI standards.

d. Welders shall be qualified in accordance with Section IX of the ASME Boiler and Pressure Vessel Code.

e. Occupational Safety and Health Administration (OSHA), Part 1910, "Occupational Health and Safety Standard."

f. Steel Structures Painting Council (SSPC) SP 10, "Near-White Blast Cleaning."

5.0 SUPPLEMENTAL DATA

The documents listed on the contents page as attachments are applicable to the Work, to the extent specified herein.

6.0 VENDOR DATA

6.1 Vendor data shall be furnished in accordance with the requirements indicated on the attached Vendor Data Requirements and Submittal Schedule.

6.2 The Vendor data furnished in accordance with paragraph 6.1 shall include the following. Data which are representative rather than exact shall be identified as such.

6.2.1 Performance curves indicating the following:

6.2.1.1 Discharge capacity in cumecs per second from zero to maximum discharge, plotted against total head in meters of water.

6.2.1.2 Brake kilowatts at motor coupling.

6.2.1.3 Efficiency for the range of operating capacity.

6.2.1.4 Required NPSH (to prevent cavitation), from shutoff to runout conditions.

6.2.1.5 Design point.

6.2.1.6 Minimum flow (for continuous operation).

6.2.2 Karmann-Knapp diagram.

6.2.3 Outline and sectional drawings showing all principal dimensions, operational and maintenance clearances, and weights of major items.

6.2.4 Electrical connection drawings.

6.2.5 Equipment support loads and a description of the support system including required number, location, material, and torque requirements of anchor bolts.

6.2.6 A list and description of proposed testing.

6.2.7 The limiting reverse rotation speed and time shall be specified for pumps to compensate for conditions specified in paragraph 8.3.

6.2.8 The bidder shall consider the operation of his equipment at runout conditions stated in paragraph 2.0,a. in light of the attached System Head Curves, and shall state the capability of the pumps to operate at that condition continuously.

6.2.9 Description of quality control exercised during manufacture.

6.2.10 Operating and maintenance manuals covering the following:

6.2.10.1 Procedures and instructions for field installation.

6.2.10.2 Required startup tests.

6.2.10.3 Operation and maintenance of the equipment being furnished.

6.2.10.4 List of recommended spare parts.

6.3 QA/QC REQUIREMENTS

a. The Vendor and his subvendor(s) shall have in effect in their shops at all times an inspection, testing, and documentation program that will ensure that the equipment

furnished under this specification meets, in all respects, the requirements specified herein.

b. The Vendor shall submit a copy of his quality control program to the Engineer.

6.4 PERFORMANCE TEST REPORTS AND CERTIFICATIONS

The following performance reports and certifications shall be submitted to the Owner prior to acceptance of the Work:

a. Alignment data sheets for rotating equipment shall be prepared and submitted to the Engineer.

b. Rotating equipment shall be lubricated and lubrication sheets shall be prepared, issued currently, and certified by both the Vendor and Engineer.

c. Certified copies of all shop test data shall be forwarded to the Engineer for later distribution to the Owner.

6.5 SPECIAL TOOLS AND SPARE PARTS

a. The technical representative required in paragraph 2.0,c. shall furnish all special installation test instruments and tools.

b. The Vendor shall furnish one complete set of new, first quality special tools or fixtures required for maintenance of the pumps specified herein. Tools shall be identified by name and number, and this number shall appear on the drawings and in the instructions to indicate the application of the tools and to permit ordering replacements.

c. The Vendor shall supply, with his propsoal, pricing for 1 and 5 year supplied of spare parts.

7.0 DESIGN REQUIREMENTS

7.1 Pumps shall be of the same design and be capable of operating in parallel or as a single pump on the system pump curve.

7.2 Flexible gear type couplings shall be provided.

7.3 The Owner's discharge connection may include an expansion joint with control units. The Vendor shall ensure the pump flanges are designed in such a manner as to allow the field installation of the expansion joint control units.

142

7.4 The pump assembly shall be designed to withstand the maximum vibration limit as stated in the Hydraulic Institute Standard as measured at the outboard motor bearing. Shaft deflection as calculated under maximum load shall not exceed .05mm (2 mils) at the end of the gland of the stuffing box.

Note: Maximum load for deflection calculations is defined as the maximum radial hydraulic load on the control impeller at any point on its curve based on the specific gravity listed on the attached Pump Specification Sheets as 1.0, whichever is greater.

7.5 Pumps will pump treated Indus River water. A typical analysis is listed in attachment 4.

7.6 ACOUSTIC REQUIREMENTS

7.6.1 The Vendor shall submit as part of his proposal a tabulation of octave band sound power levels in accordance with 7.6.3 below for the equipment being quoted without acoustic treatment or guarantee. The proposal shall be considered incomplete without this information.

7.6.2 The Vendor shall submit as part of his proposal an additional price for a guaranteed maximum sound level of 90 dba (90 decibels, a network weighted) when measured with a Type I precision sound level meter at slow response and at a distance of 1 meter (3 feet) in any direction from the nearest surface of the equipment. The Vendor shall also submit with his proposal a tabulation of octave band sound power levels in accordance with 7.6.3 below for the equipment in the sound attenuated condition.

7.6.3 The Vendor shall complete and submit as part of his proposal the attached Acoustic Data Summary Sheet (Attachment 7). It is preferred that the octave band levels be sound power levels in decibels with a reference power of 10 (exponent 12) watt. However, sound pressure levels in decibels with a reference pressure of 0.0002 microbars will be acceptable providing the weighting network and distance to the sound source are indicated. In the event acoustic data for the equipment quoted is not available, acoustic data for similar equipment will be acceptable. However, the equipment difference should be indicated and the Vendor's estimate of the acoustical effect of these differences should be indicated.

8.0 PERFORMANCE REQUIREMENTS

The circulating pumps, when installed and functioning, shall meet or exceed the following requirements:

8.1 The rating requirements shall be in accordance with the attached Pump Specification Sheets.

8.2 The pumps shall be designed to have a head-capacity characteristic which rises steadily to shutoff. At shutoff, the pump total head shall be not less than 130 percent of the head at the design condition. The best efficiency point (bep) of the pump shall be at the normal operating capacity.

8.3 In the event of a motor trip from an operating condition (discharge valve 100 percent open), reverse flow can occur due to the continued operation of the remaining pump(s).

9.0 MATERIAL REQUIREMENTS

9.1 Materials shall be in accordance with ASTM standards. Exceptions will be permitted only by written request and with approval from the Engineer.

9.2 The following materials are suggested; alternates may be proposed if they offer an advantage for the application:

a.	Casing	Carbon steel or cast iron
b.	Impeller(s)	Bronze
c.	Shaft	Carbon steel
d.	Wearing Rings	400 Series stainless steel
e.	Submerged bolts, nuts, and	Stainless steel screws

9.3 SUPPORT BASES

The Vendor shall furnish fabricated steel support bases for the pump and the Owner's motor drivers.

9.4 BEARINGS, SEALS, AND LUBRICATION

9.4.1 Bearings shall be radial horizontal split sleeve type and thrust bearings Kingsbury type. The bearings shall be oil lubricated.

144

9.4.2 Seals (stuffing boxes) shall be packed and the Vendor shall recommend the flow and pressure of clear injection water, if injection water is required.

10.0 FABRICATION AND ASSEMBLY REQUIREMENTS

The pumps shall be fabricated and assembled in accordance with the following requirements:

a. The codes and standards stated in article 4.0.

b. The Vendor's QA/QC program.

11.0 INSTALLATION REQUIREMENTS

None

12.0 PERSONNEL REQUIREMENTS

The Vendor shall employ the following qualified personnel to perform the Work:

12.1 All welders shall be qualified under the ASME Boiler and Pressure Vessel Code, Section IX.

12.2 Personnel for the technical direction of installation shall be technically competent.

13.0 INSPECTIONS AND TESTS

13.1 Tests for this class of equipment.

13.2 Testing shall be performed in accordance with Hydraulic Institute Standards to ensure a stable and vibration-free design.

13.3 In lieu of a full size pump performance test, the Vendor, with the Engineer's approval, shall do one of the following:

a. Perform a model test using a homologous series prototype for the pump being offered.

b. Submit certified test results from such a test previously performed for the pump series.

c. Submit proof of actual field test results from pumps of the same series in the size range acceptable to the Engineer.

13.4 Test procedures shall conform to the Hydraulic Institute Standards.

145

13.5 The Owner's representative shall be given free access to the Vendor's manufacturing facilities to inspect the Work in progress. Prior to the start of manufacture, the Owner shall be given a schedule of dates of all proposed tests and inspections.

13.6 If the results of a test conducted after installation indicate that the equipment does not meet its guaranteed performance, the Vendor shall at his expense make all necessary adjustments or changes to improve performance. Any subsequent test, adjustment, or modification prior to Owner acceptance shall be at the Vendor's expense.

14.0 CLEANING, CORROSION PROTECTION, AND COATING

14.1 Stainless steel surfaces or surfaces within 50mm (2 inches) of field welds shall not be painted.

14.2 All other external surfaces shall be cleaned of rust, scale, oil, etc., and then white sand blasted in accordance with SSPC-SP 10 prior to application of one primer coat and one shop coat of paint in accordance with the Vendor's standard.

15.0 MARKING AND IDENTIFICATION

15.1 Each package, skid, box, and crate shall be marked on the outside with the following information so that it is readily visible:

a. (Owner's name)
(Project identification)
(Street address)
(City, state, and zip code)

b. The Owner's purchase order number.

c. Any special instructions for handling.

d. The weight and lifting points or center of gravity.

e. The Engineer assigned tag number(s) and Bill of Material number(s).

15.2 Tagging

15.2.1 Pumps shall be supplied with punched metal tags, permanently affixed, giving the following:

a. Tag number.

b. Pump model.

c. Standard dimension designation.

d. Serial number.

e. Size.

f. Impeller diameter (maximum and installed).

g. Materials of construction.

h. Design pressure and temperature.

i. Capacity.

15.2.2 Tag numbers shall be in accordance with the attached Tagging List.

16.0 PACKAGING, SHIPPING, AND STORAGE

16.1 Equipment or piping that may have been hydrostatically tested shall be checked to ensure that all water has been drained from the unit prior to placing equipment in storage or on its foundation. After any equipment is in storage or on its foundation, temporary wood or steel plate covers shall be provided over flanges to prevent entrance of water into the unit, and the Vendor shall be responsible for any damage to unit, equipment, and associated piping until it has been accepted by the Owner.

16.2 Rotating parts shipped within the casing shall be properly blocked to ensure against damage during loading, transport, and storage. Blocking materials shall be brightly colored to facilitate their identification for removal prior to placing the equipment in service.

16.3 Unless the Owner and the Vendor agree otherwise, storage of the pumps and accessories will be outdoors. The Vendor shall inform the Owner of any special storage requirements sufficiently in advance of shipment to allow for necessary preparation.

16.4 Unpainted surfaces shall be adequately protected to prevent corrosion during shipment and storage.

16.5 Tools shall be shipped to the jobsite in a suitable separate container.

17.0 ACCEPTANCE CRITERIA

17.1 MANUFACTURING ERRORS

Equipment and materials shall be complete in all respects within the limits herein specified. Manufacturing errors and omission, requiring correction in the field, shall be performed under the direction of and at the expense of the Vendor. If the error requires shipment back to the factory, the disassembly, handling, shipping, and reassembly shall be at the Vendor's expense.

17.2 INSTALLATION INSTRUCTIONS

a. The Vendor shall provide copies of an instruction book covering all equipment being furnished, prior to the equipment being shipped. The instruction book shall have hard front and back covers and have identification of the contents on the front cover.

b. Instruction books are not considered design manuals, and if any discrepancies arise between the Vendor's drawings and instruction books, or items omitted from the drawings which are contained in the instruction book recommendations, the Vendor shall amend the instruction books or shall modify the installation at his own expense, whichever is deemed by the Owner as giving the most proper and operative final installation.

c. The instruction book shall contain a list of the special test instruments being furnished by the Vendor that are required for installation of his equipment, startup, and initial operation.

ATTACHMENT 1
SECTION IV

LIST OF DRAWINGS

The following Drawings set forth the location and extent of the Work specified herein:

Dwg. No.	Rev.	Date	Title
(Later)			

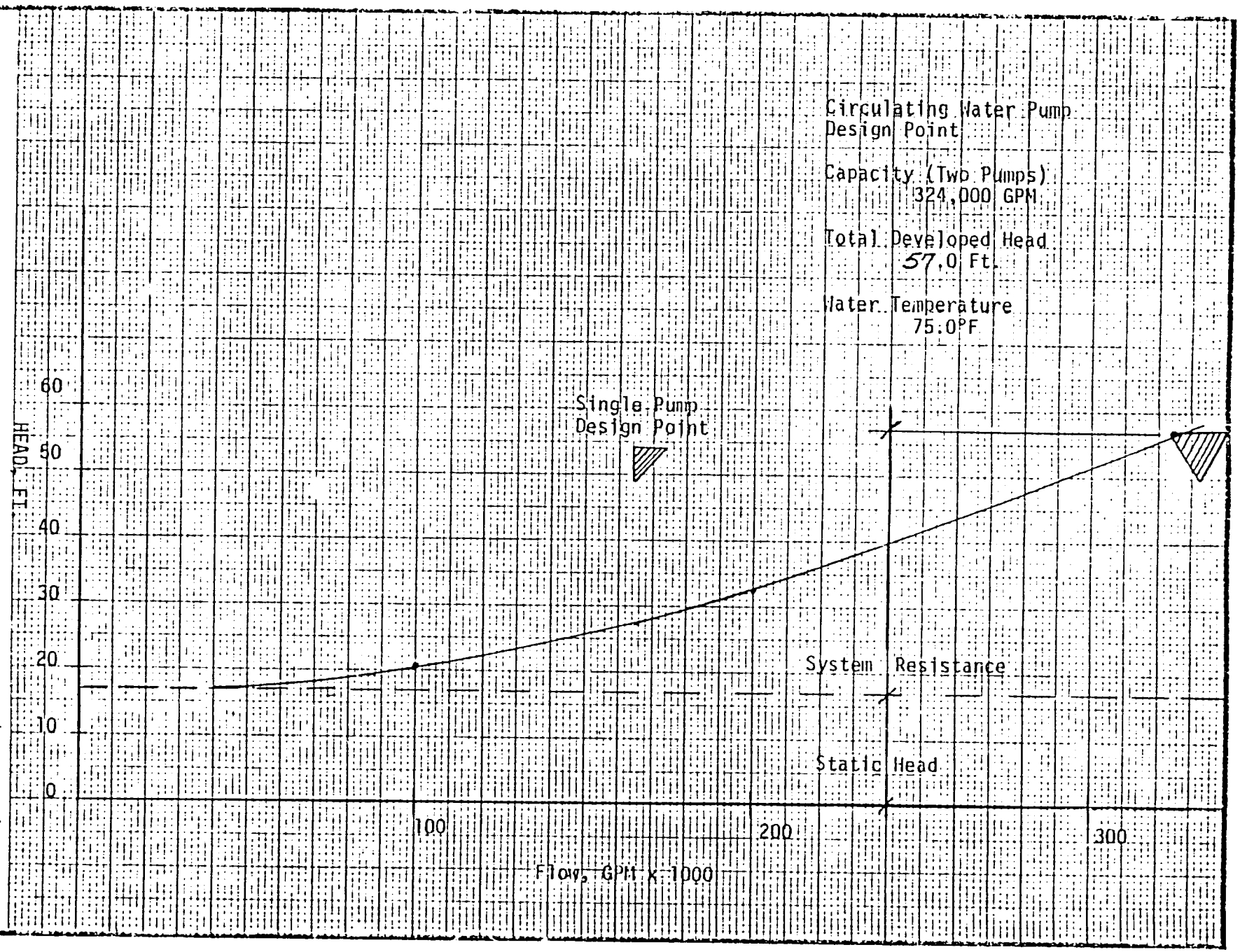

PREPARED UNDER RESPONSIBLE SUPERVISION OF

AT OFFICES OF
COMMONWEALTH ASSOCIATES INC.
2001 E WASHINGTON AVE. JACKSON, MICH.

ATTACHMENT 2
Circulating Water Pump
System Head Curve
(SAMPLE)

APP.

OWNER

DATE

NO.

SH.

K&E 17 3153 0-70

ATTACHMENT 3
CIRCULATING WATER PUMPS

TAGGING LIST

(CLIENT)
(PROJECT)

TAG NUMBER	NAME OF EQUIPMENT

ATTACHMENT 4
CIRCULATING WATER PUMPS

PUMP SPECIFICATION SHEETS

WAPDA
LAKHRA FEASIBILITY

1. Item Horizontal Centrifugal Pumps

2. Service Circulating Water

3. Number of pumps 4

4. Rating, per pump:

a.	Capacity, cumecs	(gal/min)	6.44 (102,125)
b.	Total head at design capacity (based on minimum water level per paragraph 4d.)	m (ft)	24.4 (80)
c.	Temperature (max;min)	°C (°F)	46;20 (115;55)
d.	Minimum water level in suction chamber	m (ft-in)	
e.	Maximum water level in suction chamber	m (ft-in)	
f.	Pump pit bottom elevation	m (ft-in)	

ATTACHMENT 4

TYPICAL CIRCULATING WATER ANALYSIS

Measuring Item	Unit	Value
Temperature	°C	13-46°C (55-115°F)
pH		6.5-8.5
Conductivity	Micr-Mho/cm	2700
Total Solid	ppm	1500
Chloride	ppm as Cl	700
Total Hardness	ppm as $CaCO_3$	700-1000
Suspended Solids	ppm	150

ATTACHMENT 5
EQUIPMENT DATA

WAPDA
LAKHRA FEASIBILITY

GILBERT/COMMONWEALTH — CIRCULATING WATER PUMPS

The bidder shall return one copy of this form with each copy of his bid, with all the blanks filled in.

_____ (BIDDER'S NAME)

_____ (MANUFACTURER'S NAME)

_____ (QUOTATION NUMBER)

1. Manufacturer's model number _____
2. Type _____
3. Specific speed r/min _____
4. Impeller:
   a. Type _____
   b. Diameter mm (in) _____
5. Number of stages _____
6. Shaft and bearings:
   a. Shaft diameter mm (in) _____
   b. Inboard bearings:
      (1) Number _____
      (2) Type _____
   c. Outboard bearings:
      (1) Number _____
      (2) Type _____

ATTACHMENT 5
EQUIPMENT DATA

WAPDA
LAKHRA FEASIBILITY

GILBERT/COMMONWEALTH — CIRCULATING WATER PUMPS

			(BIDDER'S NAME)
7.	Capacity	Cumecs (gpm)	
8.	Total head at design conditions	m (ft)	
9.	Shutoff head	m (ft)	
10.	Pump speed at design conditions	r/min	
11.	Required NPSH at design conditions	m (ft)	
12.	Required NPSH runout conditions	m (ft)	
13.	Depth from pump mounting base to centerline of suction bell	m (ft)	
14.	Minimum flow for continuous operation	Cumecs (gpm)	
15.	Pump efficiency at design conditions	%	
16.	Suction diameter	mm (in)	
17.	Size of discharge connection	mm (in)	
18.	Pump data required for motors:		
	a. Kilowatts (BHP) at coupling required by driven equipment when operating at normal rated design flow		

ATTACHMENT 5
EQUIPMENT DATA

WAPDA
LAKHRA FEASIBILITY

			(BIDDER'S NAME)
b.	Kilowatts (BHP) at coupling required by driven equipment when operating at maximum runout allowable		_____
c.	Motor kilowatts (HP) recommended		
d.	Motor speed at rated loads	r/min	_____
e.	Full load torque required for maximum output of equipment	nt-m (ft-lb)	_____
f.	A speed torque curve for the driven equipment requirements at maximum output is required. If the speed torque curve is not immediately available, the following data shall be supplied:		
	(1) Percent above full load torque for starting fully loaded	%	_____
	(2) Percent above full load torque when at 50% of rated speed	%	_____

ATTACHMENT 5
EQUIPMENT DATA

WAPDA
LAKHRA FEASIBILITY

GILBERT/COMMONWEALTH — CIRCULATING WATER PUMPS

_____
(BIDDER'S NAME)

g.	Direction of rotation of driven equipment when looking at coupling end: (clockwise or counter-clockwise)		
h.	WR^2 value for element or elements of rotating equipment	$kg\text{-}m^2$ ($lb\text{-}ft^2$)	_____
i.	End play required from magnetic centerline of motor (plus; minus)	mm (in)	_____
j.	Couplings:		
	(1) Type and size		_____ ; _____
	(2) Make		_____
	(3) Bore	mm (in)	_____
	(4) Keyway size	mm (in)	_____
	(5) Shaft extension required	mm (in)	_____
k.	Is shipment of motor required to Vendor's plant?		_____
l.	Approximate time before shipment that the motor is required at the Vendor's plant	weeks	_____

ATTACHMENT 5
EQUIPMENT DATA

WAPDA
LAKHRA FEASIBILITY

_____
(BIDDER'S NAME)

m.	Time required after award of Contract to submit complete motor shaft extension dimensions and coupling mounting information required by the motor manufacturer	weeks	_____
n.	Approximate time before shipment that the certified motor prints are required	weeks	_____

			Thrust	Operating Condition
o.	The amount of thrust and the operating conditions at which the following thrusts occur shall be specified:			
	(1) Weight supported by motor bearing	kg (lb)	_____	_____
	(2) Maximum continuous downthrust on motor bearings by driven equipment	kg (lb)	_____	_____
	(3) Total maximum continuous downthrust on motor bearings	kg (lb)	_____	_____
	(4) Maximum momentary downthrust on motor bearings	kg (lb)	_____	_____

ATTACHMENT 5
EQUIPMENT DATA

WAPDA
LAKHRA FEASIBILITY

(BIDDER'S NAME)

			Thrust	Operating Condition
	(5) Upthrust on motor bearings	kg	_____	_____
	(6) Maximum runout limitation	Kw (HP)	_____	_____
p.	Is a self-release coupling required?		_____	
q.	Is a nonreverse rachet required?		_____	
r.	Limits on reverse operation (time; speed)	min;r/min	_____ ;	_____
19.	Pump first critical speed	r/min	_____	
20.	Drawing approval:			
a.	Time required after award of Contract to submit drawings for approval	weeks	_____	
b.	Time required for delivery of equipment after drawing approval	weeks	_____	

ATTACHMENT 5
EQUIPMENT DATA

WAPDA
LAKHRA FEASIBILITY

GILBERT/COMMONWEALTH — CIRCULATING WATER PUMPS

_____
(BIDDER'S NAME)

	Material	ASTM No.
21. Alternate materials for vertical pumps:		
a. Column pipe, discharge elbow, and driver pedestal	_____	_____
b. Impeller(s)	_____	_____
c. Suction bell	_____	_____
d. Bowls, diffusers	_____	_____
e. Line shaft	_____	_____
f. Impeller shaft	_____	_____
g. Shaft sleeves	_____	_____
h. Bearings	_____	_____
i. Wear rings	_____	_____
j. Submerged bolts, nuts, screws	_____	_____

22. Does the equipment have the capability of operating in accordance with the requirements of paragraph 8.2. _____

23. Description of an alternate method of operation, if any _____

_____

_____

ATTACHMENT 5
EQUIPMENT DATA

WAPDA
LAKHRA FEASIBILITY

_____
(BIDDER'S NAME)

24. Weight:

a.	Rotating element	kg (lb)	_____
b.	Heaviest lift during assembly or disassembly	kg (lb)	_____
c.	Total pump weight including motor support (dry; operating)	kg (lb)	_____ ; _____

25. Lubrication and seal water:

a.	Flow		_____
b.	Maximum allowable pressure	kPa (psi)	_____
c.	Required pressure	kPa (psi)	_____
d.	Required quality:		_____
	(1) pH		_____
	(2) Particulate size	mm (in)	_____
	(3) Chlorides	ppm	_____

26. Is there a need for clear water lubrication of line bearings as specified in paragraph 1.08.3 based upon the water analysis provided in the attached Pump Specification Sheets? _____

ATTACHMENT 5
EQUIPMENT DATA

WAPDA
LAKHRA FEASIBILITY

GILBERT/COMMONWEALTH — CIRCULATING WATER PUMPS

_____
(BIDDER'S NAME)

27. List of tools furnished with equipment

_____

_____

_____

28. Itemized description of recommended spare parts

_____

_____

_____

_____

_____

_____

_____

_____

_____

29. List of special test instruments to be furnished by the Vendor that are required for installation of his equipment, startup, and initial operation.

_____

_____

_____

_____

_____

ATTACHMENT 6
SPECIFICATION EXCEPTIONS

GILBERT/COMMONWEALTH CIRCULATING WATER PUMPS

The bidder certifies that the bid is complete and in absolute agreement with the requirements of this Specification, except as specifically stated below. (Use additional sheets if required).

_____
(BIDDER'S NAME)

_____
(MANUFACTURER'S NAME)

_____
(QUOTATION NUMBER)

Attest: _____
(SIGNATURE)

_____
(TITLE)

ATTACHMENT 7

ACOUSTIC DATA
SUMMARY SHEET

CIRCULATING WATER PUMPS

Octave Band Geometric Mean Frequency (Hertz)	Equipment Without Acoustic Treatment or Guarantee	Equipment With Maximum Sound Level Guarantee of 90 dBA at 1 meter (3 feet)
63	_____	_____
125	_____	_____
250	_____	_____
500	_____	_____
1000	_____	_____
2000	_____	_____
4000	_____	_____
8000	_____	_____

Kind of levels given, indicate which of the following:

Sound Power Levels re 10 (exp -12) watt	_____	_____
Sound Pressure Levels re 2x10 (exp -4) microbars	_____	_____

If sound pressure levels are given, indicate both of the following:

Weighting network use A, B, C, or Linear (None)	_____	_____
Distance to sound source Feet or Meters	_____	_____

Vendor Comments: _____

_____

_____

_____

ATTACHMENT 9

Refer to Electrical Motor Specifications E-1 and E-2.

ATTACHMENT 10

Refer to Motor Data Sheets included in Electrical Motor Specifications E-1 and E-2.

LAKHRA POWER FEASIBILITY STUDY

SPECIFICATION M-10

MECHANICAL DRAFT COOLING TOWER

LPS/B1499/D2

SPECIFICATION M-10

MECHANICAL DRAFT COOLING TOWERS

TABLE OF CONTENTS

Item	Title	Page
1.0	DESCRIPTION OF WORK	1
2.0	WORK INCLUDED	1
3.0	WORK NOT INCLUDED	2
4.0	APPLICABLE CODES, STANDARDS, AND REGULATORY REQUIREMENTS	2
5.0	SUPPLEMENTAL DATA	4
6.0	VENDOR DATA	4
7.0	DESIGN REQUIREMENTS	6
8.0	PERFORMANCE REQUIREMENTS	9
9.0	MATERIAL REQUIREMENTS	11
10.0	FABRICATION AND ASSEMBLY REQUIREMENTS	13
11.0	INSTALLATION REQUIREMENTS (NONE)	14
12.0	PERSONNEL REQUIREMENTS	14
13.0	INSPECTIONS AND TESTS	15
14.0	CLEANING, CORROSION PROTECTION, AND COATING	16
15.0	MARKING AND IDENTIFICATION	18
16.0	PACKAGING, SHIPPING, AND STORAGE	19
17.0	ACCEPTANCE CRITERIA	19

MECHANICAL DRAFT COOLING TOWERS

TABLE OF CONTENTS
(Continued)

Attachments

1. STRUCTURAL DESIGN SPECIFICATIONS S-1A AND S-1B

2. WATER ANALYSIS SHEET (1 page)

3. EQUIPMENT DATA FORMS (9 pages)

4. SPECIFICATION EXCEPTIONS FORM (1 page)

5. MOTOR SPECIFICATION

6. MOTOR DATA SHEET

7. ACOUSTIC DATA SHEET

LAKHRA POWER FEASIBILITY STUDY

SPECIFICATION M-10

MECHANICAL DRAFT COOLING TOWER

1.0 DESCRIPTION OF WORK

1.1 The Work to be performed shall include the design, furnishing of materials and components, delivering to the jobsite, construction, assistance during startup and initial operation, and acceptance testing of four (4) mechanical draft counterflow concrete cooling towers in accordance with the requirements of this Specification. The cooling towers will be installed at two 350 MW power plants for the Water and Power Development Authority (WAPDA) to be located in Pakistan.

1.2 The towers shall be designed for continuous full-load duty in a closed circuit with the condensers of a 300 MW generating plant.

2.0 WORK INCLUDED

2.1 The Work shall include at least the following:

a. Complete cooling tower structures in place, including foundations, basins, and all excavation and backfill.

b. Discharge stacks.

c. Hot-water distribution system, complete with all supports with the main inlet at grade.

d. Louvers, fill, complete with fill-support system, and drift eliminators.

e. Two access stairs per tower with ladders, platforms, walkways, and access doors necessary for operation, maintenance, and inspection.

f. Handrails, kneerails, and toe guards or kick plates.

g. Fans, gear boxes, drive shafts, couplings, vibration switches, and lubrication system.

h. Lightning protection system (proposed as option).

j. Fire protection system for fill.

k. Technical direction and startup services for testing and initial operation.

l. Performance testing in accordance with Article 13 of this Specification.

m. Supply of motors for valve operators and fans.

2.2 The terminal points of supply shall be as follows:

a. The flange face or construction joint of the hot water piping immediately external to the cooling tower basin.

b. The construction joints nearest the basin wall in the cold-water outlet flume.

c. The flange of the drain and overflow outlet pipes.

d. Pigtails for connection to the ground loop.

3.0 WORK NOT INCLUDED

The following work is not included in this section but will be accomplished by others:

a. Hot-water supply piping (to base of cooling tower).

b. Cold-water piping or flume (to pumphouse).

c. Grounding grid.

d. Piling, if required.

e. Wiring, cable, conduit, materials, and installation.

f. Final cleaning of surfaces to be painted.

4.0 APPLICABLE CODES, STANDARDS, AND REGULATORY REQUIREMENTS

4.1 The equipment furnished under this Specification shall be in accordance with accepted current standards for electric utility equipment and as governed by the following codes which are specifically referenced elsewhere in this Specification, attachment specification, or both:

a. American Concrete Institute (ACI).

b. American Gear Manufacturers Association (AGMA).

c. American Institute of Steel Construction (AISC).

d. American National Standards Institute (ANSI):

S1.2, "Method for the Physical Measurement of Sound."

e. American Society of Civil Engineers (ASCE).

f. American Society of Mechanical Engineers (ASME):

PTC-23, "Power Test Code for Atmospheric Water-Cooling Equipment.

g. American Society for Testing and Materials (ASTM).

h. American Welding Society (AWS).

i. Institute of Electrical and Electronics Engineers (IEEE):

Std.-85-, "Airborne Sound Measurements on Rotating Electric Machinery."

j. National Electrical Manufacturers Association (NEMA).

k. National Fire Protection Association (NFPA):

a. 214-, "Water-Cooling Towers."

b. 78-, "Lightning Protection Code."

c. 220-, "Types of Building Construction."

l. Underwriters' Laboratories, Inc. (UL):

96A, "Master Labeled Lightning Protection Systems."

m. Applicable state and local codes.

4.2 The equipment to be supplied under this Specification is also subject to the following Federal regulations as amended at the date of award of Contract.

a. "Safety and Health Regulations for Construction" as described in the Federal Register, Volume 36, Number 75, Part II by the Department of Labor, Bureau of Labor Standards.

b. Occupational Safety and Health Administration Standards; National Consensus Standards and Established Federal Standards, as described in the Federal Register, Volume 36,

172

Number 105, Department of Labor, Occupational Safety and Health Administration.

c. American Uniform Building Code, Section 1.5.

4.3 Application of codes and standards referenced herein requires the application of the latest issue date and of all addenda adopted as of the date of the purchase order. Later revisions may be invoked only by mutual agreement between Purchaser and Vendor.

5.0 SUPPLEMENTAL DATA

The items listed on the contents page under Attachments are hereby made a part of this Specification.

6.0 VENDOR DATA

6.1 Vendor data shall be furnished in accordance with the requirements indicated on the attached Vendor Data Requirements and Submittal Schedule (later).

6.2 In addition to the Vendor data required by Section 6.1, the Vendor shall furnish the following information:

a. Description of fabrication details.

b. Tower outline drawing showing overall dimensions and location of interface points.

c. Shop loading curve for the period applicable to fabrication of the specified equipment for the delivery dates per Paragraph 6.2 of this Specification.

d. Time required after receipt of order to submit certified drawings for approval and performance curves as specified herein.

e. Time required for fabrication and delivery after receipt of all necessary drawings and approvals.

f. Cutoff date beyond which revisions cannot be made on equipment specified.

g. The schedule of Certified Vendor Drawings shall include a list of drawings by category, such as general arrangement, foundation data, and electrical connections. If titles of the Certified Vendor Drawings are unknown, an estimated number of drawings will be submitted in each category.

h. Description of fill bypass system and the method of dissipating hydraulic energy when bypassing.

i. Speed torque curves of fan speed reducer and fan at rated temperature and at minimum temperature at which fan may be operated at.

j. Delivery dates:

1. Drawings (sometimes called "approved for layout" or AFL) to be furnished by Vendor, showing outlines and overall or approximate dimensions and weights, suitable for use by Engineer in developing plant layouts; complete submittal by _____.

2. Vendor Drawings (sometimes called "certified for construction" or CFC) and other technical information: first submittals by _____; complete drawings and information by .

3. Resubmittals, by Vendor, or drawings, procedures, or similar items which are returned by the Engineer or QA organization with a status other than "approved"; 6 weeks after return by the Engineer or QA organization.

4. First item of equipment: _____.

5. Final item of equipment: _____.

6.3 QA/QC REQUIREMENTS

6.3.1 The Vendor and his subcontractor(s) shall have in effect in their shops at all times an inspection, testing, and documentation program that will insure that the equipment furnished under this Specification meets, in all respects, the requirements specified herein.

6.3.2 The Vendor shall submit a copy of his quality control manual to the Engineer.

6.4 PERFORMANCE REPORTS AND CERTIFICATIONS

The following performance reports and certifications shall be submitted to the Owner prior to or with delivery of the Work:

6.4.1 The Vendor shall submit to the Owner the results of tests specified in Paragraphs 13.2 and 13.3.

6.4.2 The Vendor shall furnish a list of field test results of the equipment which must be tested during installation and initial startup.

6.4.3 Test procedures shall be in accordance with the latest revision of the ASME "Power Test Code for Atmospheric Water-Cooling Equipment," PTC-23. Cooling tower performance will be evaluated by comparing the ASME results of the tests on the tower to the guaranteed performance curves when linearly interpolated.

6.4.4 Performance analyses shall be based upon the arithmetic averages of the observed readings.

6.5 MATERIAL TEST REPORTS AND CERTIFICATIONS

6.5.1 Three certified copies of all mill test reports and results of nondestructive weld tests for the structural steel furnished will be supplied to the Owner.

6.5.2 Prior to start of manufacture, the Engineer shall be given a list, with scheduled dates, of all proposed tests and inspections. The Engineer shall be notified at least 1 week in advance of those tests and inspections that he wishes to observe. Five certified copies of all factory test data shall be furnished to the Engineer.

6.6 SPECIAL TOOLS AND SPARE PARTS

6.6.1 The Vendor shall furnish one complete set of all special tools, all in first class condition, which will be required for maintenance of the equipment covered by this Specification. Identification of all tools by name and number shall be provided, and this number shall appear on drawings and instructions to indicate the application of the tools furnished and to permit the ordering of replacement tools.

6.6.2 Instruction books supplied by the Vendor for equipment being furnished shall include a listing of recommended spare parts.

6.6.3 The Vendor shall supply, with his proposal, pricing for 1 and 5 year supplies of spare parts.

7.0 DESIGN REQUIREMENTS

7.1 TOWER LOCATION

7.1.1 The Vendor shall consider the location of the cooling tower(s) as shown on the Drawings and shall pay particular attention to this layout with respect to the location of adjacent structures and building. The Vendor shall be responsible for determining

115

the effect of wind on airflow distribution and for the proper performance of the cooling tower, as located, and shall inform the Owner of any potential problems with the tower location as shown.

7.1.2 The Vendor shall be responsible for the specified performance of the cooling tower(s), as located on the site.

7.2 The tower shall be capable of handling a 10 percent greater than design waterflow with proportionately reduced cooling capacity.

7.3 WATER ANALYSIS

Makeup water will be treated water taken from the Indus River. The attached Water Analysis Sheet shows typical design water analysis for the tower makeup water. The concentration factor of solids in the circulating water may vary from to 2 to 9. Based on the water analysis and concentration factors, the Vendor shall supply a statement of recommended treatment of cooling tower or makeup water.

7.4 GENERAL DESIGN REQUIREMENTS

7.4.1 The cooling tower structure shall be designed to support the Owner's electrical conduit for the fan motors and to support the Owner's lighting fixtures and conduit for lighting the stairs, platforms, and open decks.

7.4.2 Permanent davits shall be provided on the cooling tower to hoist the gear reducers, motors, lubricants, etc., to and from the fan deck to the ground. Also, skids shall be provided to move gear reducers, motors, lubricants, etc., across the fan deck.

7.5 DESIGN DATA

The cooling tower shall comply with the design conditions listed on the Equipment Data forms.

7.6 STRUCTURAL DESIGN REQUIREMENTS

The design and construction of all necessary reinforced concrete structures shall be as detailed in Attachment.

All motors supplied shall meet the requirements of Attachment 5 Motor Specification.

7.7 ACOUSTIC REQUIREMENTS

7.7.1 The Vendor shall submit as part of his Proposal a tabulation of octave band sound power levels in accordance with 7.7.3 below for the equipment being quoted without acoustic treatment or guarantee. The Proposal will be considered incomplete without this information.

7.7.2 The Vendor shall submit as part of his Proposal an additional price for a guaranteed maximum sound level of 90 dBA (90 decibels, A network weighted) when measured with a Type I precision sound level meter at slow response and at a distance of 1 meter (3 feet) in any direction from the nearest surface of the equipment. The Vendor shall also submit with his Proposal a tabulation of octave band sound levels in accordance with 7.7.3 below for the equipment in the sound attenuated condition.

7.7.3 The Vendor shall complete and submit as part of his Proposal the attached Acoustic Data Summary Sheet. It is preferred that the octave band levels be sound power levels in decibels with a reference power of 10 (exponent -12) watt. However, sound pressure levels in decibels with a reference pressure of 0.0002 microbars will be acceptable providing the weighting network and distance to the sound source are indicated. In the event acoustic data for similar equipment will be acceptable. However, the equipment differences should be indicated and the Vendor's estimate of the acoustical effect of these differences should be indicated.

7.7.4 The maximum sound power or sound pressure levels will be verified by measurements at the installation site at the Purchaser's discretion. The Purchaser's Engineer will perform these requested tests in accordance with standard test procedures as applicable to the particular installation or type of equipment.

7.7.5 Where no specific testing procedure is applicable, verification tests shall be conducted in accordance with the following:

7.7.5.1 Institute of Electrical and Electronics Engineers (IEEE) Standard 85, "IEEE Test Procedure for Airborne Sound Measurements on Rotating Electric Machinery."

7.7.5.2 American National Standards Institute (ANSI) S1.2, "Method for the Physical Measurement of Sound."

8.0 PERFORMANCE REQUIREMENTS

8.1 The cooling tower when installed and functioning shall meet or exceed the following performance requirements.

a.	Total circulating waterflow	l/s (gpm)	12,886 (204,250)
b.	Total heat rejection	kJ/hr (Btu/hr)	2.07×10^9 (1.96×10^9)
c.	Design influent temperature	°C (°F)	45°C (113°F)
d.	Design effluent temperature	°C (°F)	34 (93)
e.	Design wet-bulb temperature	°C (°F)	28.3 (83)
f.	Design drift loss	%	.005
g.	Design approach	°C (°F)	5.6 (10)

h. The Vendor shall guarantee that the cooling tower meet the specified octave band frequency sound pressure levels when tested under all operating conditions, as described herein.

8.2 FILL DESIGN

8.2.1 Either splash type, film type, or any combination of fill thereof may be utilized; however, the fill shall be of sufficient thickness and adequately supported to provide the necessary rigidity. The fill and fill support structure shall be designed to withstand loads arising from all reasonable operating conditions, including icing of the fill.

8.2.2 The fill system shall be free from sagging and shall have freedom to expand and contract without overstressing.

8.2.3 The fill system shall be arranged in sections that can be removed for inspection, cleaning, and maintenance.

8.2.4 The fill and fill support system shall be free from vibration and movement under all operating conditions.

8.3 DRIFT ELIMINATORS

8.3.1 The eliminators shall be the multipass type and shall be fitted into the interior of the tower to prevent drift in excess of .005 percent of the circulating waterflow rate. This limitation shall be guaranteed for all operating conditions.

8.3.2 The eliminators shall be arranged in sections which are easily removable for inspection, cleaning, or maintenance.

8.4 DISTRIBUTION SYSTEM

8.4.1 Water shall be distributed over the fill in pipes or troughs. Valves shall be provided which are designed for equalization of flow and for isolation of tower sections for maintenance.

8.4.2 The distribution system shall be designed so that all exposed piping can be drained for freeze protection or flushed for desilting.

8.4.3 The distribution system shall be arranged so that rated water flow can be maintained with one section of the fill out-of-service. Motor-operated sectionalizing valves shall be included with the distribution system.

8.4.4 The water distribution system shall be designed on a fail-safe basis. Any piping, which would be subject to pump shutoff pressure by malfunction of valves, shall be either designed for the pressure or provided with suitable relief devices.

8.4.5 Thermometer wells, pressure test taps, and taps for pilot tube shall be provided in a suitable location to meet the requirements of ASME PTC-23.

8.5 BYPASS SYSTEM

The Vendor shall provide remotely operated fill bypass system including piping, headers, motor operated valves to bypass 0 to 100 percent of design flow to the basin. It shall provide the same pumping head as the tower during normal operation.

8.6 ACCESS FACILITIES

8.6.1 Walkways, stairways, landings, ladders, doors, and openings shall be provided, as required, to give access to all sections of the cooling tower requiring periodic inspection, adjustment, repair, or replacement.

8.6.2 The towers shall be provided with landings and platforms, including all necessary walkways, to provide full access to

the distribution system and deicing valves, and have a minimum of two stairways to the fan deck which will provide two means of egress for safety reasons.

8.6.3 Crossflow designs shall include an access walkway and door through the tower fill structure providing access to the tower interior above the water level in the cooling tower basin. The door shall be fitted with a lock, hinges, and safety latch of corrosion-resistant materials.

8.6.4 An access way with ramp shall be provided to allow entrance of a front-end loader to the cooling tower basin for removal of silt and debris. For crossflow designs, a door shall be provided that is easily opened and closed, and complete with an access walkway, specified in Paragraph 8.6, 3., provided that personnel above-water access is maintained to the cooling tower interior when the cooling tower basin is filled.

8.6.5 Access facilities items covered under Paragraph 8.6 shall be in compliance with OSHA, state, or municipal codes, or both, as applicable.

8.7 GUARANTEED PERFORMANCE CURVES

The Vendor shall furnish as a minimum the following guaranteed performance curves:

a. Wet bulb vs cold water temperature for 80, 90, 100, and 110 percent flow rates at 80, 90, 100 and 110 percent ranges.

b. Wet bulb temperature vs evaporation rate for 90, 100, and 110 percent ranges.

c. kaV/L vs L/G

9.0 MATERIAL REQUIREMENTS

9.1 GENERAL

9.1.1 The cooling tower shall not contain any wood or wood products.

9.1.2 Each component of the cooling tower shall be suitable for the specified water environment. Care shall be taken in the use of minor parts, purchased components, etc., to be sure that they are suitable for service. The Owner shall have the right to approve all materials or to reject any materials that are known to be not suitable for the service.

9.1.3 Plastic materials shall be fire resistant as defined in NFPA Standard No. 220.

9.2 STRUCTURES

The cooling tower structure and basin shall be reinforced concrete.

9.3 FILL

The fill structural supports shall be reinforced concrete. Louvers, fill, fill support, and eliminators may be manufacturers standard plastic fire-resistant materials.

9.4 WATER DISTRIBUTION SYSTEM

The water distribution system shall be reinforced plastic or concrete. Valves shall be cast iron with 316 stainless steel shafts and bronze trim. Any sprayers, nozzles, or other devices exposed to the water shall be plastic. Any purchased valves shall be bought from vendors acceptable to the Owner.

9.5 HARDWARE

Nuts, bolts, fasteners, connectors, etc., shall be of bronze, plastic, or Monel. The fan and motor support structure shall be galvanized or epoxy coated. Before the support structure is galvanized, all sharp corners, rough welds, and exposed edges shall be ground smooth with a minimum of a 3mm (1/8 inch) radius.

9.6 FAN STACKS

Fan stacks for the cooling tower can be fire-resistant fiberglass or concrete.

9.7 EQUIPMENT REQUIREMENTS

9.7.1 Gear Reducer: The gear reducers shall be manufactured to AGMA standards and have a service factor of not less than 2.00 and be designed for continuous cooling tower service. The gear case shall be coated for corrosion protection and shall have an oil filter system. Fill, drain, and sample connections for the oil shall be piped to an external location. Input and output shafts shall be corrosion protected. All oil lines shall be stainless steel.

9.7.2 Drive train and accessories:

9.7.2.1 The fan shall be complete with a hub cover. The complete drive train shall be factory assembled for alignment including the motor. Final alignment, doweling, and final fan pitch adjustment shall be performed in the field after installation. A

vibration trip switch and oil temperature monitor shall be included.

The Vendor shall provide a motor specification marked to show those features that are required and those that are desirable for cooling tower service. The motors shall be set, aligned, and doweled in the Vendor's shop.

9.7.2.2 Fan blades, gear reducer shafts, driver couplings, etc., shall have noncorrosive coatings or shall be fabricated from noncorrosive materials. All components exposed to atmospheric conditions shall have corrosion protection.

9.8 INSTRUMENTATION AND CONTROLS

Thermometer wells and test taps shall be provided in the cooling tower, as required, for the specified tests. Temperature wells and test taps shall be provided for continuous measurement of water temperatures to and from the cooling tower.

9.9 LIGHTNING PROTECTION SYSTEM

The lightning protection system and all components supplied shall be in accordance with the requirements of the Underwriters' Laboratories, Inc. Standard 96A and the NFPA, Codes and Standards Vol. 7, Standard 78, "Lightning Protection Code." Design and installation shall be subject to the approval of the Owner.

10.0 FABRICATION AND ASSEMBLY REQUIREMENTS

10.1 The means employed for doing the various classes of Work shall be at the option of the Vendor subject to approval of the Engineer as may be necessary to safeguard the quality and results of all the features of the Work and specific erection and testing procedure as specified herein.

10.2 The Vendor shall perform all Work of assembling items of equipment requiring field assembly as follows:

10.2.1 Setting in place on foundations to accurate line and grade.

10.2.2 Properly shimming up with steel shims, including drilling holes in equipment bases for insertion of grout where required.

10.2.3 Aligning to manufacturers' standards as set forth in their erection manuals

10.2.4 Doweling of bed plates and separate coupling bases including drilling where required, of equipment bases, and shims, reaming

of holes in embedded metal frames, and installation of coupling guards.

10.3 The Vendor shall maintain the portions of the jobsite affected by the Work in a condition acceptable to Owner as regards to housekeeping.

10.4 There shall be no cutting, burning, heating, welding, or tacking of any kind to fabricated, installed equipment, or both, for temporary support, attachment purposes, or other reasons without the specific approval of the Owner.

10.5 ROTATING EQUIPMENT

10.5.1 The fan, gear reducer, and driver couplings shall be field checked by the Vendor for alignment, as specified in the instruction book for the equipment.

10.5.2 Approval shall be obtained from the Owner before the final coupling of the equipment is undertaken. The Vendor shall be responsible for the final coupling to manufacturer's tolerances. If the motor is coupled to the equipment, the coupling shall be disconnected to establish the direction of motor rotation.

10.5.3 The Vendor shall open, or make accessible for inspection any parts of equipment, such as speed increaser gear, as the Owner may direct prior to equipment being placed in operation. The Vendor shall check all bolts to the specified torque values. The bolts shall be locked in place by a method approved by the Engineer. The couplings on preassembled equipment shall be disconnected by the Vendor and alignment verified. Field assembled couplings shall be aligned as stated for other rotating equipment.

10.5.4 Internals shall be carefully handled and installed in the manner and sequence recommended by the manufacturer.

10.5.5 After the equipment has been installed and tested and the installation has been approved by the Owner or his agent, the Vendor shall dowel the equipment.

11.0 INSTALLATION REQUIREMENTS

None

12.0 PERSONNEL REQUIREMENTS

12.1 Services of a qualified field representative shall be provided to coordinate the proper startup of the equipment.

12.2 The Vendor shall supply the required test observers and assistance for the performance tests as specified below.

13.0 INSPECTIONS AND TESTS

13.1 INSPECTION

The Owner or his agent shall have free access to the Vendor's and the subcontractor's shops for inspection and fabrication and for observing shop tests. Tests required for certification of equipment shall be made at the Vendor's expense.

13.2 INITIAL FIELD TESTS

13.2.1 Operational tests:

The Owner shall have the right to make operational tests, at his expense, to demonstrate the ability of the equipment furnished by the Vendor to operate under the conditions specified. The Vendor shall provide all instrumentation and controls as specified in Paragraph 9.8 to facilitate all tests. If the results of the tests conducted indicate that the equipment does not meet its guaranteed performance, the Vendor shall, at his expense, make all necessary adjustments or changes to improve the performance. Subsequent tests until acceptance by the Owner shall be made at the Vendor's expense. The Owner will supply engineers and technicians for data taking.

13.2.2 Installation and startup tests:

The Vendor shall furnish not less than 90 days in advance of any tests, a list of all field tests of the equipment which must be made during installation and initial startup.

13.3 PERFORMANCE TESTS

13.3.1 Thermal performance tests:

A minimum of three thermal performance tests will be performed, one under spring, summer, and winter operating conditions. The test procedures shall be mutually agreed upon before award of the Contract. Multiple inlet wet bulb temperatures will govern for the test. Waterflow measurements will be made using the Universal Venturi Tube of B.I.F. Industries. The expense of equipment and attendance will be charged to the Owner. The Vendor should include the expense for any observers he wishes to be present.

13.3.2 Drift tests:

a. The cooling tower shall be tested to determine the total drift quantity and drop size using mutually agreeable procedures.

b. Tests shall be conducted within 1 year of initial operation as scheduled by the Owner. If testing shows that modifications to the equipment are necessary, the Vendor shall make all the required changes, and then appropriate tests will be conducted to verify that the modifications met their design objectives. The Vendor shall provide equivalent support for retesting as he did for the initial testing at no additional cost to the Owner.

13.3.3 Evaporation tests:

The cooling tower shall be tested for evaporation losses at a minimum of three atmospheric conditions selected by the Owner in the spring, fall, and winter seasons. The test procedure will be the hold load constant, close off makeup and blowdown, and measure the loss of water in the cold water basin over a period of time mutually agreed upon. If a stilling chamber is required, the Vendor shall so state and include it in the bid.

13.3.4 Noise test:

With the cooling tower operating under conditions selected by the Owner, a noise test will be performed per IEEE standard 85 and ANSI S1.2 to determine sound pressure levels at the octave band center frequencies as indicated on Attachment 9.

Measurements to be taken at a distance one meter.

13.4 FIRE PROTECTION REQUIREMENTS

The Vendor shall, at his expense, have the necessary tests performed on fill, drift eliminators, fan stacks, louvers, and other required components to determine if these components meet the fire protection criteria specified in Paragraph 08.1.

14.0 <u>CLEANING, CORROSION PROTECTION, AND COATING</u>

14.1 Metal parts shall be clean and free of rust and mill scale prior to painting and shipment. A schedule of the Vendor's preservation procedures shall be submitted to the Owner for approval.

14.2 Nonmachined surfaces shall be given one coat of the Vendor's standard primer. Minimum dry-film thickness shall be 2 mils, unless otherwise specified.

14.3 Machined surfaces, including shafts, bearings, and couplings, shall be adequately protected against corrosion and damage during shipment and outdoor storage for a period of 1 year. Openings shall be suitably capped with metal covers where possible.

14.4 Weld end preparations shall be coated with Deoxaluminate or approved equal and shall be covered with metal end caps prior to shipment.

14.5 The Vendor shall clean up excessive dirt and remove any protective coatings applied by manufacturers. External surfaces of equipment shall be cleaned of dirt and grease. Final cleaning of surfaces to be painted will be performed by others.

14.6 The Vendor shall <u>not</u> remove protective covers from flanges, pipe connections, etc., until connections to piping systems are ready to be made.

14.7 Rotating Equipment:

14.7.1 The Vendor shall install lubricant in the bearings of equipment as it is received for storage or installation, and thereafter shall manually rotate the shafts of the equipment on a <u>weekly basis</u> until the equipment is placed in operation, to maintain a protective film on the journals and bearings. Before placing the equipment in service, the Vendor shall clean the bearings, remove the original lubricant, and install lubricant furnished by the Owner for the respective equipment. This operation will be under the direction of the Owner and plant operating personnel.

14.7.2 Rotating equipment shall have its lubrication piping to bearings checked to insure free passage. Bearings for drive and driven equipment shall be checked and cleaned as follows:

a. Sleeve bearings or oil-lubricated antifriction bearings:

Flush all housings with clean lubrication oil and drain completely. Replace drain plugs and fill lubricating system with lubricant furnished by the Owner as provided for the particular unit.

b. Grease-lubricated ball bearing equipment:

Remove the bearing housing cover to insure supply and good clean condition. If grease shows any signs of deterioration, dirt, or contamination by any foreign material, remove grease completely, bathe bearings in kerosene, completely dry them, and repack them with

grease furnished by the Owner as provided for the particular unit. This operation will be under the direction of the Owner and plant personnel.

14.8 STATIONARY EQUIPMENT

Equipment or piping that may have been hydrostatically tested or that may be damaged by freezing shall be checked to insure that all water has been drained from the unit prior to placing equipment in storage or on its foundation. The Vendor shall take all precautions necessary to protect equipment and piping in storage or in place from damage due to weather conditions including protection from freezing damage. After equipment is in storage or on its foundation, temporary wood or steel plate covers shall be provided over flanges to prevent admittance of water to the unit. The Vendor shall be responsible for any damage to the unit, equipment, and associated piping until such time as it has been accepted by the Owner.

15.0 MARKING AND IDENTIFICATION

15.1 Each package, skid, box and crate shall be marked on the outside with the following information so that it is readily visible:

a. (Owner's name)
(Project identification)
(Address)
(City, state, zip code)

b. Purchase Order Number

c. Weight:

d. Equipment Nos. as applicable:

15.2 Each unit shall be identified with a tag number. The number shall be permanently imprinted with at least 5mm (3/16") high letters on a 22 gage stainless steel tag. The tag shall be attached to the enclosure with pins of a similar material.

15.3 Each unit shall have a permanently secured data plate made from at least 22 gage stainless steel, permanently imprinted with 5mm (3/16") high letters, and containing the following information:

a. Manufacturer's name and address:

b. Model Number:

c. Serial Number:

d. Date of Manufacture:

e. Duty:

f. Weight:

15.4 The data plate shall be located where it is readily visible and shall be securely attached with pins of a material similar to the plate.

15.5 Equipment item numbers shall be utilized by the Vendor in designating equipment. Numbers so assigned by the Vendor may be reassigned at the option of the Engineer.

15.6 Items furnished under these specifications, but not identified herein, shall have tags inscribed as directed by the Engineer.

16.0 PACKAGING, SHIPPING, AND STORAGE

16.1 The Vendor shall be responsible for receiving, unloading, hauling, uncrating, checking, storing, handling, setting in proper place, assembling, aligning work on drives, shimming, doweling, and rigging in accordance with the Drawings and Specifications, as required, to place into commercial operation all items of equipment, complete with appurtenances thereto.

16.2 The Vendor shall be responsible for the protection and safe handling of all equipment and materials until the Work is completed and accepted by the Owner. The responsibility of the Vendor for equipment and materials, furnished by the Owner, shall begin on delivery of same at the jobsite.

16.3 Storage and protection of equipment and materials will be subject to approval by the Engineer.

16.4 Proper and adequate handling equipment and rigging shall be used at all times. Equipment and rigging shall be examined and checked at frequent intervals and at any time when so requested by the Engineer.

17.0 ACCEPTANCE CRITERIA

17.1 MANUFACTURING ERRORS

Equipment and materials shall be complete in all respects within the limits herein specified. Manufacturing errors and omissions, required to be corrected in the field, shall be performed under the direction of and at the expense of the Vendor. If the

error requires shipment back to the factory, the disassembly, handling, shipping, and reassembly shall be at the Vendor's expense.

17.2 Submittal of Vendor Data as required in Article 6.0

17.3 Submittal of performance test reports and certifications as required in Article 6.4.

ATTACHMENT 1

STRUCTURAL DESIGN SPECIFICATIONS

TECHNICAL SPECIFICATION S-1A

FOR

SUPPLY OF CONCRETE

LAKHRA POWER FEASIBILITY STUDY

SPECIFICATION S-1A

FOR

SUPPLY OF CONCRETE

TABLE OF CONTENTS

		Page
1.0	DESCRIPTION OF WORK	1
2.0	WORK INCLUDED	1
3.0	WORK NOT INCLUDED	1
4.0	APPLICABLE CODES, STANDARDS AND REGULATORY REQUIREMENTS	1
5.0	SUPPLEMENTAL DATA (NONE)	4
6.0	VENDOR DATA	4
7.0	DESIGN REQUIREMENTS	5
8.0	PERFORMANCE REQUIREMENTS (NONE)	6
9.0	MATERIAL REQUIREMENTS	6
10.0	FABRICATION AND ASSEMBLY REQUIREMENTS	7
11.0	INSTALLATION REQUIREMENTS (NONE)	8
12.0	PERSONNEL REQUIREMENTS (NONE)	8
13.0	INSPECTIONS AND TESTS	8
14.0	CLEANING, CORROSION PROTECTION AND COATING (NONE)	11
15.0	MARKING AND IDENTIFICATION	11
16.0	PACKAGING, SHIPPING AND STORAGE	11
17.0	ACCEPTANCE CRITERIA	11

SPECIFICATION S-1A
FOR
SUPPLY OF CONCRETE

1.0 DESCRIPTION OF WORK

The scope of services to be performed consists of supplying all materials, labor, equipment, supervision, tools, transportation, mix design, detailing, testing, and incidentals to batch, mix and deliver concrete to the power plant jobsite as described in this Specification.

2.0 WORK INCLUDED

2.1 The Work shall include, but not be necessarily limited to, the following items:

2.1.1 Furnish concrete mix designs and test results for the concrete mixes to be supplied from an independent laboratory testing agency including slump tests, and admixture types and quantities.

2.1.2 Furnish all concrete materials that meets the concrete mix design provisions as noted in 2.1.1.

2.1.3 Furnish all labor, equipment, supervision, tools, incidentals, and transportation to batch, mix, and deliver the concrete to the placement location.

2.2 The Work shall be planned and provide adequately for both usual and unusual conditions such as: severe precipitation, low or high temperatures, high winds, etc., so as to supply concrete as required to the placement location.

3.0 WORK NOT INCLUDED

3.1 CONCRETE PLACEMENT

Concrete placement is not covered by this Specification.

4.0 APPLICABLE CODES, STANDARDS AND REGULATORY REQUIREMENTS

4.1 All work specified herein and covered by this Specification shall comply with all applicable portions of the following codes, standards, and regulations, and be in accordance with Federal laws, state laws, and local laws:

4.1.1 American Concrete Institute (ACI)

ACI 211.1	Standard Practice for Selecting Proportions for Normal and Heavy Weights and Mass Concrete
ACI 214	Recommended Practice for Evaluation of Strength Test Results of Concrete
ACI 301	Specifications for Structural Concrete for Buildings
ACI 304	Recommended Practice for Measuring, Mixing, Transporting and Placing Concrete
ACI 305R	Recommended Practice for Hot Weather Concreting
ACI 306R	Recommended Practice for Cold Weather Concreting
ACI 318	Building Code Requirements for Reinforced Concrete

4.1.2 American Society for Testing of Materials (ASTM)

ASTM C29	Standard Method of Test for Unit Weight and Voids in Aggregate
ASTM C33	Standard Specification for Concrete Aggregates
ASTM C39	Standard Test Method for Compressive Strength of Cylindrical Concrete Specimens
ASTM C94	Standard Specification for Ready-Mixed Concrete
ASTM C138	Standard Test Method for Unit Weight, Yield and Air Content (Gravimetric) of Concrete
ASTM C143	Standard Test Method for Slump of Portland Cement Concrete
ASTM C150	Standard Specification for Portland Cement
ASTM C172	Sampling Freshly Mixed Concrete
ASTM C173	Standard Test Method for Air Content of Freshly Mixed Concrete by the Volumetric Method
ASTM C186	Standard Test Method for Heat of Hydration of Hydraulic Cement

ASTM C192	Standard Method of Making and Curing Concrete Test Specimens in the Laboratory
ASTM C226	Standard Specification for Air Entraining Additions for Use in the Manufacture of Air-Entraining Portland Cement
ASTM C231	Standard Test Method for Air Content of Freshly Mixed Concrete by the Pressure Method
ASTM C233	Standard Method of Testing Air Entraining Admixtures for Concrete
ASTM C260	Standard Specification for Air Entraining Admixtures for Concrete
ASTM C451	Standard Test Method for Early Stiffening of Portland Cement (Paste Method)
ASTM C456	Standard Test Method for Processing Additions for Use in the Manufacture of Hydraulic Cements
ASTM C494	Standard Specification for Chemical Admixtures for Concrete
ASTM C618	Standard Specification for Fly Ash and Raw or Calcined Natural Pozzolan for Use as a Mineral Admixture in Portland Cement Concrete

4.1.3 National Bureau of Standards (NBS)

Handbook 44	Specification, Tolerance and Other Technical Requirements for Commercial Weight and Measuring Devices

4.1.4 National Ready Mixed Concrete Association (NRMCA)

Certification of Ready Mixed Concrete Production Facilicies

4.2 CONFLICTS

4.2.1 The aforementioned codes, regulations, and specifications shall govern except where such requirements are less conservative. than the comparable requirements of this Specification, in which case, this Specification shall govern.

4.2.2 All conflicts shall be presented in writing to the Owner immediately, or if possible 3 days prior to beginning the Work affected by the conflict.

4.3 AVAILABILITY OF STANDARDS AND SPECIFICATIONS

4.3.1 These reference codes, standards, and specifications are available from the American Concrete Institute, P.O. Box 19150, Redford Station, Detroit, Michigan 48219; from the American Society for Testing and Materials, 1916 Race Street, Philadelphia, Pennsylvania 19103; and from the National Bureau of Standards, Commerce Department, Gaithersburg, Maryland 20760.

4.3.2 The Vendor, having reference to these documents, shall maintain copies of each at the batch plant at all times.

4.4 REFERENCE TO STANDARDS

4.4.1 For convenience, reference is made in succeeding sections of this Specification to various specific portions of the codes, standards, and specifications and certain modifications and additions are made.

4.4.2 Neither the specific references nor any modifications and additions are intended to deemphasize any other portion of these codes, standards, and specifications.

4.5 APPLICABLE ISSUE DATE

Application of codes and standards referenced herein requires the application of the latest issue date and of all addenda adopted as of the date of the purchase order. Later revisions may be invoked only by mutual agreement between Purchaser and Vendor.

5.0 SUPPLEMENTAL DATA

None

6.0 VENDOR DATA

6.1 Vendor shall furnish concrete mix design and laboratory test results from an Independent Testing Agency for Approval.

6.2 Vendor shall furnish his proposed concrete material(s) sources and locations with his Proposal.

fl6

7.0 DESIGN REQUIREMENTS

7.1 CONCRETE MIX

7.1.1 Ready-mixed concrete shall be in accordance with ASTM C94.

7.1.2 The Vendor shall obtain concrete mixes and tests designed in accordance with ACI 318, Section 4, for each class of concrete. Concrete mixes shall be designed by a qualified independent testing laboratory using representative samples of aggregate and cement. The designing laboratory shall submit its design in a written report to the Owner for review. The report shall state the mix proportions used and the slump and compressive strength of each class of concrete as determined by laboratory tests. Compressive tests shall conform to ASTM C39 "Standard Method of Test for Compressive Strength of Cylindrical Concrete Specimens." All costs of laboratory mix design and associated testing shall be paid for by the Vendor as part of the cost of his work.

7.1.3 Concrete shall use Type I, Type II, or Type V cement, be homogeneous, readily placeable and uniformly workable and will be designed in accordance with ACI 211.1 to attain properties of strength, durability and placeability in conformance with the following requirements:

a. The maximum size of coarse aggregate specified in the mix design will not be larger than 40 mm (1 1/2") for footings/mats and 20 mm (3/4") for floor slabs, walls, and etc.

b. The minimum concrete strengths and allowable slumps for which the different concrete classes will be designed shall be as follows:

Class Concrete	Minimum 28 Day Compressive Strength kPa (psi)	Allowable Slump mm (inches)
AA	27,580 (4,000)	75 ± 25 (3 ± 1)
A	20,685 (3,000)	75 ± 25 (3 ± 1)
B (Lean Fill)	13,790 (2,000)	75 ± 25 (3 ± 1)

c. The water-cement ratio, including liquid admixtures and free moisture in all aggregates shall not exceed 0.50.

d. The fly ash content shall replace no more than 20 percent, by weight, of the cement.

8.0 PERFORMANCE REQUIREMENTS

None

9.0 MATERIAL REQUIREMENTS

9.1 GENERAL

9.1.1 The concrete shall be composed of Portland Cement, fly ash, coarse and fine aggregate, and water.

9.1.2 Each ingredient shall be a single brand from a single source. No change in brand or source shall be made without prior written approval.

9.1.3 The specific class(es) of concrete will be as specified on the Engineering Drawings.

9.2 CEMENT

Cement shall be Type I, Type II, or Type V Portland Cement and shall meet the requirements of ASTM C-150. The specific cement type will be as specified on the Engineering Drawings.

9.3 AGGREGATE

Coarse and fine aggregate shall conform to ASTM C33.

9.4 WATER

Mixing water shall be fresh water and meet the requirements of ASTM C94. The use of sea water will not be permitted.

9.5 ADMIXTURES

9.5.1 Admixtures containing calcium chloride or other chlorides, sulfides, or nitrates shall not be used.

9.5.2 Chemical and water-reducing admixtures shall meet the requirements of ASTM C494.

9.5.3 Water-reducing admixtures shall be compatible for use in the same concrete mix.

9.6 FLY ASH

Fly ash shall meet the requirements of ASTM C618 for Class F fly ash, except that the loss on ignition shall not exceed 6 percent.

10.0 FABRICATION AND ASSEMBLY REQUIREMENTS

10.1 BATCHING, MIXING AND TRANSPORTING CONCRETE

10.1.1 All concrete shall be batched and mixed on site and transported to the placement location(s) in accordance with ASTM C94 and ACI 304 unless otherwise specified herein.

10.1.2 Batch plant facilities and truck mixers shall meet the requirements of the National Ready Mixed Concrete Association as specified in their pamphlet entitled "Certification of Ready-Mixed Concrete Production Facilities."

10.1.3 Equipment and methods for mixing concrete shall be such that thoroughly mixed concrete of uniform quality is produced.

10.1.4 Any mixer leaking mortar, or causing waste of materials through faulty charging, shall be taken out-of-service and kept out until satisfactory repair and improvements have been made.

10.1.5 Before beginning operations each day, accumulations of hardened concrete and foreign materials shall be removed from the inner surfaces of the drum, charging and discharging openings and chutes.

10.1.6 Retempered concrete shall not be used.

10.1.7 Discharge of the concrete shall be completed within 3/4 to 1 hour or before the drum has revolved 300 revolutions, whichever comes first. Both the clock and the counter shall be started when the mixing water comes in contact with the cement.

10.1.8 Truck mixers shall be in good mechanical condition, with no leaking valves or leaking connections in the water supply lines.

10.1.9 Truck mixers shall be of the revolving drum type, so constructed that the concrete can be thoroughly mixed to insure a uniform distribution of materials throughout the mass.

10.1.10 Concrete completely mixed in a truck mixer shall be mixed for 70 to 100 revolutions at the mixing speed designated by the truck manufacturer.

10.2 HEATED CONCRETE

The Vendor shall supply facilities of sufficient capacity to heat water and aggregates for heated concrete. The Vendor shall follow the practices of ACI 306 for furnishing concrete during cold weather.

10.3 CONCRETE REQUIRING COOLING

The Vendor shall provide for and follow the practices of ACI 305 for concrete requiring cooling.

11.0 INSTALLATION REQUIREMENTS

None

12.0 PERSONNEL REQUIREMENTS

None

13.0 INSPECTIONS AND TESTS

13.1 INSPECTION

13.1.1 The Owner's Representative may inspect the portland cement either at the cement plant and/or at the point of delivery to the batch plant.

13.1.2 Inspection of batching and mixing facilities may be made by the Owner's Representative at the batching plant and/or at the point of delivery.

13.1.3 The Vendor shall cooperate with the Owner's Representative when inspections are requested.

13.1.4 The Vendor shall perform a periodic checkout of any batch plant control system when so requested by the Owner's Representative.

13.1.5 The Vendor shall have a minimum of 10 standard 23 kg (50-pound) weights, meeting the requirements of the National Bureau of Standards, readily available for calibrating and testing weighing equipment.

13.2 AUTHORITY TO REJECT

The Owner will have authority to reject all materials and workmanship not conforming to this Specification any time defects are found during the progress of the work. The Vendor shall promptly repair or replace the same at the direction of the Owner.

13.3 RECEIPT OF DEFECTIVE MATERIAL

If upon receipt of the material at the destination or during placing, any defective material is found, the Vendor shall

replace this material free of charge, FOB jobsite. The defective material will be documented by the Owner. Samples of the defective materials will be taken by the Owner.

13.4 LIABILITY FOR DEFECTIVE MATERIAL

If the Owner's Representative, through oversight or otherwise, has accepted material or work which is defective or does not conform to this Specification, this material, no matter in what state of completion, may be rejected by the Owner.

13.5 TESTING OF CEMENT

13.5.1 When requested by the Owner, the Vendor shall sample and utilize an independent testing agency to test the portland cement used in the concrete in accordance with Section 8 and 9 of ASTM C150. The test results shall be documented and forwarded to the Owner.

13.5.2 The following periods from time of sampling shall be allowed for completion of testing:

1-day test	6 days
3-day test	8 days
7-day test	12 days
28-day test	33 days

13.5.3 All cement stored in bulk at the mill for more than 6 months, or cement in bags stored locally for more than 3 months after completion of the tests, may be retested before use and may be rejected if it fails to conform to any of the requirements of this Specification.

13.5.4 At the request of the Owner the Vendor shall obtain from the cement manufacturer a statement in writing indicating the nature, amount, and identity of any processing addition used in the production of the cement. Also, if requested the cement manufacturer shall supply test data showing compliance of any such processing addition with ASTM C465.

13.5.5 When requested by the Owner, the Vendor shall furnish a certification from the cement manufacturer that the cement was tested in accordance with and conforms to the requirements of ASTM C150. The certification along with a report of the test results shall be furnished at the time of shipment.

13.6 TESTING OF CONCRETE

13.6.1 Testing of concrete will be done in accordance with the codes, standards, and specifications as referened in Section 4.0 of this Specification.

13.6.2 The Vendor's Independent Testing Agency will determine the mix design and test all cylinders and will supply copies of the test reports to the Owner. Such testing will be in accordance with ASTM C39.

13.6.3 The Owner's Representative may reject a batch of concrete if the compressive strength and slump of the concrete does not meet the specified design limits specified in Subsections 7.1.3 and 13.6.7 of this Specification.

13.6.4 The concrete cylinders to be used in compression tests will be made and cured in accordance with ASTM C192 by an Independent Testing Agency.

13.6.5 Normally not less than four cylinders will be made for each test and not less than one test for each 100 cu. meters or major portion thereof of each class of concrete furnished.

13.6.6 Additional cylinders may be required for testing when the temperature falls below 4.5°C (40°F) or above 49°C (120°F).

13.6.7 The strength level of an individual class of concrete will be considered satisfactory if both of the following requirements are met:

a. The averge of all sets of three consecutive strength tests equal or exceed the specified compressive strength.

b. No individual strength test (averge of two cylinders) falls below the specified compressive strength by more than 3,450 kPa (500 psi).

13.6.8 The Owner will have the right to order a change in the proportions of the water content for the remaining portion of the structure if the strength of the laboratory control cylinders for any portion of the structure falls below the compressive strength as specified.

13.6.9 The Owner may order concrete removed and replaced at the expense of the Vendor if the tests specified indicate the concrete is below the design compressive strength due to improper batching, mixing, and transporting or the use of materials that do <u>not</u> meet the requirements of this Specification.

13.6.10 The Vendor is responsible for any in-process testing he deems necessary to ensure that the concrete delivered meets the requirements of this Specification.

14.0 CLEANING, CORROSION PROTECTION AND COATING

"None."

15.0 MARKING AND IDENTIFICATION

Batch tickets shall be provided in accordance with the provisions of ASTM C94.

16.0 PACKAGING, SHIPPING, AND STORAGE

16.1 STORAGE AND HANDLING

16.1.1 Cement, aggregates, and admixtures shall be handled and stored in accordance with the requirements of ACI 301, Section 2.5 so as to prevent deterioration or contamination.

16.1.2 All cement which has become caked, partially set or otherwise deteriorated, damaged or contaminated shall not be used.

16.1.3 All cement with a temperature in excess of 74°C (165°F) shall not be used.

16.1.4 All aggregates shall be stored and handled so as to preserve the gradation and cleanliness of the material.

16.1.5 Any segregation and/or contamination is cause for rejection. No unsuitable material shall be used in concrete furnished under this Specification.

16.1.6 Provisions for cooling aggregate and water shall be provided for during hot weather concreting.

16.1.7 Provisions for heating aggregate and water shall be provided for cold weather concreting.

17.0 ACCEPTANCE CRITERIA

17.1 The acceptability of concrete will be based upon the criteria specified in Subsection 7.0 of this Specification.

17.2 The mix design and laboratory test results from an Independent Testing Agency, for the concrete furnished, are required prior to acceptance of this Specification's work.

17.3 The Owner shall have authority to reject all materials and work not conforming to this Specification. Any defective material or work found shall be promptly replaced or corrected by the Vendor to the satisfaction of the Owner.

17.4 If the Owner, through oversight or otherwise, has accepted material or work which is defective or contrary to this Specification, the material or work, no matter in what stage of completion, may be rejected by the Owner.

17.5 Acceptance tests shall be performed on the materials of Section 9.0 of this Specification. These tests may be waived provided that the Vendor submits copies of the Manufacturer's Certified Material Test Reports.

TECHNICAL SPECIFICATION S-1B

FOR

CONCRETE WORK

LAKHRA POWER FEASIBILITY STUDY

SPECIFICATION S-1B

FOR

CONCRETE WORK

TABLE OF CONTENTS

		Page
1.0	DESCRIPTION OF WORK	1
2.0	WORK INCLUDED	1
3.0	WORK NOT INCLUDED	2
4.0	APPLICABLE CODES, STANDARDS AND REGULATORY REQUIREMENTS	2
5.0	SUPPLEMENTAL DATA (NONE)	5
6.0	VENDOR DATA (NONE)	5
7.0	DESIGN REQUIREMENTS (NONE)	5
8.0	PERFORMANCE REQUIREMENTS (NONE)	5
9.0	MATERIAL REQUIREMENTS	5
10.0	FABRICATION AND ASSEMBLY REQUIREMENTS (NONE)	6
11.0	INSTALLATION REQUIREMENTS	6
12.0	PERSONNEL REQUIREMENTS (NONE)	18
13.0	INSPECTIONS AND TESTS	18
14.0	CLEANING, CORROSION PROTECTION AND COATING (NONE)	19
15.0	MARKING AND IDENTIFICATION	20
16.0	PACKAGING, SHIPPING AND STORAGE	20
17.0	ACCEPTANCE CRITERIA	20

SPECIFICATION S-1B
FOR
CONCRETE WORK

1.0 DESCRIPTION OF WORK

The Contractor shall furnish all labor, supervision, tools, construction equipment, transportation and materials as specified by the Owner, and do all work necessary for receiving, handling, placing and curing of concrete for the power plant as described in this Specification.

2.0 WORK INCLUDED

2.1 Services to be supplied include, but are not limited to:

a. Removal of water from excavations

b. Installation of a mud mat

c. Construction of forms

d. Receive, store, handle and place reinforcing steel

e. Build construction joints, keyways, and expansion joints

f. Unload, store and install all water stops

g. Unload, store, handle and install or erect all embedded items

2.2 ITEMS TO BE FURNISHED

Items to be furnished include, but are not limited to:

a. Tools, equipment, labor and all incidentals required for completing the services required by this Specification

b. Form materials including bracing, shoring, spreaders, ties and form release agents required for the project

c. Tie wires, reinforcing chairs, etc., required for placing reinforcing steel

d. Grout and water stop materials

e. Curing compounds and surface hardeners required for the project

2.3 The Contractor shall plan and provide adequately for both usual and unusual conditions such as severe precipitation, high winds, etc., so as to complete the concrete work under the general direction of the Owner's Superintendent as indicated on the Contractor's Drawings and this Specification.

3.0 WORK NOT INCLUDED

3.1 Work items not covered by this Specification are as follows:

a. Supply of Concrete

b. Testing of Concrete

c. Supply of Reinforcing Steel

4.0 APPLICABLE CODES, STANDARDS AND REGULATORY REQUIREMENTS

All materials, fabrication, examination, testing, inspection, certification and documentation shall conform to the applicable portions of the following Specifications.

4.1 INDUSTRIAL CODES AND STANDARDS

4.1.1 American Concrete Institute (ACI)

ACI 305R	Hot Weather Concreting
ACI 306R	Cold Weather Concreting
ACI 211.1	Recommended Practice for Selecting Proportions for Normal and Heavyweight Concrete
ACI 214	Recommended Practice for Evaluation of Strength Test Results of Concrete
ACI 301	Specifications for Structural Concrete for Buildings
ACI 304	Recommended Practice for Measuring, Mixing, Transporting and Placing Concrete
ACI 311	Recommended Practice for Concrete Inspection
ACI 315	Manual of Standard Practice for Detailing Reinforced Concrete Structures

	ACI 318	Building Code Requirements for Reinforced Concrete
	ACI 347	Recommended Practice for Concrete Formwork

4.1.2 American Welding Society

AWS D1.4	Structural Welding Code Reinforcing Steel

4.2 AMERICAN SOCIETY FOR TESTING AND MATERIALS

ASTM A82	Standard Specification for Cold-Drawn Steel Wire for Concrete Reinforcement
ASTM A184	Standard Specification for Fabricated Steel Bar or Rod Mats for Concrete Reinforcement
ASTM A185	Standard Specification for Welded Steel Wire Fabric for Concrete Reinforcement
ASTM A615	Standard Specification for Deformed Billet-Steel Bars for Concrete Reinforcement
ASTM C29	Standard Method of Test for Unit Weight of Aggregate
ASTM C31	Standard Method of Making and Curing Concrete Compression and Flexure Strength Test Specimens in the Field
ASTM C33	Standard Specification for Concrete Aggregates
ASTM C39	Standard Method of Test for Compressive Strength of Molded Concrete Cylinders
ASTM C42	Standard Method of Obtaining and Testing Drilled Cores and Sawed Beams of Concrete
ASTM C78	Standard Method of Test for Flexural Strength of Concrete (Using Simple Beam with Third-Point Loading)
ASTM C94	Standard Specifications for Ready-Mixed Concrete
ASTM C138	Standard Method of Test for Weight Per Cubic Foot, Yield and Air Content (Gravimetric) of Concrete

209

ASTM C143	Standard Method of Test for Slump of Portland Cement Concrete
ASTM C150	Standard Specification for Portland Cement
ASTM C192	Standard Method of Making and Curing Concrete Test Specimens in the Laboratory
ASTM C231	Test for Air Content of Freshly Mixed Concrete by the Pressure Method
ASTM C233	Testing Air Entraining Admixtures for Concrete
ASTM C618	Specification for Fly Ash and Raw or Calcined Natural Pozzolans for Use in Portland Cement Concrete

4.3 FEDERAL CODES AND STANDARDS

Code of Federal Regulations (CFR) - Title 29 CFR, Part 1910, "Occupational Safety and Health Standards".

4.4 AMERICAN ASSOCIATION OF STATE HIGHWAY OFFICIALS

AASHTO M 182-60 - Burlap Cloth made from Jute or Kenaf.

4.5 GOVERNING SPECIFICATIONS

4.5.1 The aforementioned regulations and specifications shall govern except where provisions of this Specification conflict, in which event this Specification shall govern.

4.5.2 The Contractor shall bring all conflicts between the aforementioned regulations and this Specification to the attention of the Owner's Superintendent.

4.6 AVAILABILITY OF STANDARDS AND SPECIFICATIONS

4.6.1 These reference standards and specifications are available from American Concrete Institute, P.O. Box 19150 Detroit, Michigan; from American Society for Testing and Materials, 1916 Race Street, Philadelphia, Pennsylvania and from The American Welding Society, 2501 N.W. 7th Street, Miami, Florida 33125.

4.6.2 The Contractor having reference to these documents shall maintain copies of same on the jobsite at all times.

4.7 APPLICABLE ISSUE DATE

Application of codes and standards referenced herein requires the application of the latest issue date and of all addenda adopted as of the date of the purchase order. Later revisions may be invoked only by mutual agreement between Purchaser and Vendor.

5.0 SUPPLEMENTAL DATA

None

6.0 VENDOR DATA

Not Applicable

7.0 DESIGN REQUIREMENTS

Not Applicable

8.0 PERFORMANCE REQUIREMENTS

Not Applicable

9.0 MATERIAL REQUIREMENTS

9.1 CONCRETE

9.1.1 All concrete shall have a minimum 28 day compressive strength of 20,685 kPa (3,000 psi) unless otherwise approved by the Owner's Engineer.

9.1.2 All concrete shall consist of cement conforming to ASTM Specification C-150-78a, Type I or Type II and shall be air entrained unless otherwise approved by the Owner's Engineer.

9.2 GROUT

9.2.1 All grout shall be placed by the Contractor in accordance with the manufacturer's recommended procedures. All fluid grout is to be nonstaining, nonshrink and containing no iron fillings.

9.2.2 All grout will be fluid grout unless otherwise approved by the Owner's Engineer.

9.3 FORMS

9.3.1 Exterior wall forms shall be either wood or metal and shall conform to the shape, lines and dimensions of the concrete as called for on the Contractor's Drawings.

9.3.2 At all unexposed surfaces, undressed lumber may be used.

9.4 REINFORCING STEEL

9.4.1 The reinforcing steel shall be billet steel, intermediate grade deformed bars and shall meet Specification ASTM Designations A615, Grade 60, unless otherwise approved by the Owner's Engineer.

9.4.2 Welded wire fabric and mesh reinforcement shall meet Specifications ASTM A82 and ASTM A185.

9.4.3 Fabricated steel bar or rod mats for concrete reinforcement shall meet Specification ASTM Designation A184.

9.5 EMBEDDED ITEMS

Sleeves, pipes or conduits of aluminum shall not be embedded in structural concrete unless effectively coated or covered with bitumastic to prevent aluminum-concrete reaction or electrolytic action between aluminum and the reinforcing steel.

10.0 FABRICATION AND ASSEMBLY REQUIREMENTS

NONE

11.0 INSTALLATION REQUIREMENTS

11.1 FORMS

11.1.1 Form Placement

11.1.1.1 When forms are re-used, the surfaces to be in contact with concrete must be thoroughly cleaned and defects repaired before re-using.

11.1.1.2 Forms shall be substantial and sufficiently tight to prevent leakage of concrete and formation of fins.

11.1.1.3 Forms shall be properly braced or tied together so as to maintain their position and shape. If adequate foundation for shores cannot be secured, trussed supports shall be provided.

11.1.1.4 Forms shall be sufficiently strong to securely carry all construction loads without permanent deformation or deflection.

11.1.1.5 Forms shall be set to line and grade and so constructed and fastened as to produce true lines. Special care shall be taken to prevent bulging and to ensure that all surfaces be plumb and true.

11.1.1.6 Forms shall be so constructed as to facilitate the screeding and striking-off of exposed surfaces to accurate elevations.

11.1.1.7 Temporary openings shall be provided at the base of wall forms and at other points where necessary to facilitate cleaning and inspection.

11.1.1.8 All foreign matter shall be completely removed before any concrete is placed.

11.1.1.9 The inside of forms shall be coated with nonstaining mineral oil or other approved material. The oil shall be applied before reinforcement is placed.

11.1.1.10 All inserts, pipe sleeves, frames, etc., as may be required and all recesses as may be required or directed, shall be built into the construction.

11.1.1.11 Permanent Metal forms may be used in constructing the roofs and concrete floors only where shown and indicated on the Contractor's Drawings. These forms shall be capable of withstanding all construction loads.

11.1.1.12 All forms shall be constructed within the suggested tolerances of ACI 347, "Recommended Practice for Concrete Formwork" unless otherwise approved by the Owner's Engineer.

11.1.1.13 All forms shall be inspected and approved by the Owner's Superintendent before depositing of concrete.

11.1.2 <u>Form Removal</u>

11.1.2.1 Forms shall not be disturbed until the concrete has adequately hardened.

11.1.2.2 Shoring shall not be removed until the member has acquired sufficient strength to safely support its weight together with any other loads superimposed upon it.

11.1.2.3 Allowable construction loads for concrete with forms removed shall be based on cylinder test result strengths as a minimum.

11.2.3.4 Members subject to additional loads during construction shall be adequately shored to support both the member and construction loads in such a manner as will protect the member from damage by the loads.

11.1.2.5 Shoring under girders, beams and slabs shall have wedges under them to facilitate their adjustment and removal.

11.1.2.6 If fins and bulges repeatedly occur after such has on three (3) occasions been called to the Contractor's attention it will be considered an error in forming and they shall be removed and ground down at the Contractor's expense.

11.1.2.7 Wall clamps or tie rods shall be so made that when forms are removed no metal shall be within 25 mm (1") of any surface.

11.1.2.8 All openings in the surface due to formwork shall be promptly and completely filled with mortar.

11.1.2.9 All honeycombed openings and voids in concrete shall be repaired at the direction and discretion of the Owner's Engineer.

11.1.2.10 No wire ties shall be used except with express permission of the Owner's Superintendent.

11.2 REINFORCING STEEL

11.2.1 Bar Bending

All bends shall be made cold, around a pin having a minimum diameter equal to that specified in ACI 318.

11.2.2 Placing

11.2.2.1 Reinforcing shall be clean, free of all loose rust, scale, oil and other coatings which would impair or reduce its bond, before the reinforcing is placed in the forms, and shall be in such condition immediately before placing of concrete.

11.2.2.2 Reinforcing shall be accurately and securely placed to dimensions and spacing shown on the Contractor's Drawings.

11.2.2.3 Blocking used to hold the reinforcing steel up from the subgrade or formwork shall be structurally adequate, and shall prevent seepage of water to the reinforcing. Steel chairs or concrete blocks are acceptable.

11.2.2.4 Reinforcing steel shall be securely held in proper place to resist all applied construction loads. Interpretation of construction loads shall include, among other things, men walking on the reinforcing steel and the dumping of concrete through and on the reinforcing steel.

11.2.2.5 Where splices are shown or permitted they shall provide sufficient lap to adequately transmit the stress between bars in accordance with ACI 318.

11.2.2.6 Cadwelds as indicated on the Contractor's Drawings shall be used in accordance with ACI 318, and placed in accordance with the manufacturer's recommended procedures.

11.3 PLACING CONCRETE

11.3.1 General

11.3.1.1 Before beginning a run of concrete, hardened concrete and foreign materials shall be removed from the inner surfaces of the mixing and conveying equipment.

11.3.1.2 Before depositing concrete, all debris shall be removed from the space to be occupied by the concrete.

11.3.1.3 Retempered concrete shall not be used in this work, except under the direct supervision and approval of the Owner's Superintendent.

11.3.2 Removal of Water

11.3.2.1 Water shall be removed from excavations by the Contractor before concrete is deposited. No concrete shall be placed in any space containing water.

11.3.2.2 Underwater placement of concrete shall be prohibited except by written approval of the Owner's Engineer.

11.3.3 Preparation Before Concreting

11.3.3.1 Before any concrete is placed, all mud shall be completely removed and the temperature of all surfaces the concrete will contact shall be raised above the freezing point.

11.3.3.2 Concrete shall not be placed on frozen subgrade or on a surface that contains frozen materials.

215

11.3.3.3 The surface of concrete which has set and against which new concrete is to be poured shall be thoroughly cleaned to remove all foreign materials and laitance and saturated with water unless otherwise approved by the Owner's Engineer.

11.3.4 Dry Pack Grout

11.3.4.1 Dry pack grout shall be used only when approved by the Owner's Engineer.

11.3.4.2 Dry pack grout shall consist of one part cement to 2-1/2 parts of sand with just enough water to produce a mortar that will stick together while being molded into a ball by a slight pressure of the hands.

11.3.4.3 The dry pack grout shall be placed in small increments at a time and well rodded and packed beneath the plate using approximately a 25 mm (1") diameter rod for compacting.

11.3.5 Fluid Grout

11.3.5.1 Fluid grout shall be used in all locations where grout is called for unless otherwise approved by the Owner's Engineer.

11.3.5.2 Types of additives for fluid grouts shall be approved by the Owner's Superintendent.

11.3.5.3 Placement shall be in accordance with the manufacturer's recommended procedures.

11.3.6 Mud Mat

The installation of a mud mat, to provide suitable conditions to install the base slabs, shall be approved by the Owner's Superintendent. The concrete placed shall be in addition to the designed thickness of the concrete.

11.3.7 Handling

11.3.7.1 Concrete shall be handled from the mixer to the place of final deposit as rapidly as practicable by methods which prevent the separation or loss of ingredients.

11.3.7.2 It shall be deposited in the forms as nearly as practicable in its final position to avoid rehandling.

11.3.7.3 It shall be so deposited as to maintain, until the completion of the unit, a plastic surface approximately horizontal.

11.3.7.4 Concrete may be dropped into forms vertically for a distance of not more than 10 m (30 feet) through a tight tube, the bottom of the tube to be not more than 1 m (3 feet) above the plastic surface. This section does not apply to cast-in-place or pipe piles.

11.3.7.5 Forms for walls or other thin sections of considerable height shall be provided with openings or other devices that will permit the concrete to be placed in a manner that will avoid accumulations of hardened concrete on the forms or metal reinforcement and prevent segregation. Under no circumstances shall concrete that has partially hardened be deposited in the work.

11.3.7.6 In high walls and columns, care shall be exercised to minimize shrinkage.

11.3.7.7 Easier workability of concrete secured by means of excess water shall be done only with the expressed permission of the Owner's Superintendent.

11.3.8 Depositing Continuously

If for any reason the concreting is stopped, the greatest care shall be taken to stop the work at such a point that the joints formed will not weaken the member structurally. Such construction joints shall be made only on approval of the Owner's Engineer and shall be true, straight joints.

11.3.9 Chuting

11.3.9.1 Concreting shall not be conveyed by chuting except where other methods would be impracticable and then only with the expressed permission of the Owner's Superintendent.

11.3.9.2 In case chuting is permitted, the plant shall be of such size and design as to ensure a practically continuous flow in the chute.

11.3.9.3 The angle of the chute with the horizontal shall be such as to allow the concrete to flow without separation of the ingredients.

11.3.9.4 The delivery end of the chute shall be as close as possible to the point of deposit, but not more than 1 meter (3 feet) above plastic surface.

11.3.9.5 When the operation is intermittent, the spout shall discharge into a hopper. The chute shall be thoroughly flushed with water before and after each run. The water used for this purpose shall be discharged outside the forms.

11.3.10 Consolidation

11.3.10.1 Concrete, during and immediately after depositing, shall be thoroughly consolidated to maximum subsidence, without segregation, using approved mechanical vibrators.

11.3.10.2 All areas shall be vibrated uniformly.

11.3.10.3 Vibrators shall be inserted vertically at close enough intervals so that the zones of influence overlap.

11.3.10.4 Vibration shall not be continued in any one spot to the extent that pools of grout are formed.

11.3.10.5 The vibrator shall be inserted to the full depth of the layer being treated. When concrete is being placed in layers, the tip of the vibrator shall extend approximately 100 mm (4") into the underlying layer.

11.3.10.6 Vibrators shall not be used to move concrete horizontally.

11.3.10.7 A sufficient number of vibrators shall be employed to insure uniform consolidation throughout the entire mass.

11.3.10.8 Operators of vibrators shall be experienced and competent.

11.3.10.9 The Contractor shall provide ample standby vibrators and repair parts and shall provide systematic maintenance.

11.3.10.10 Frequency of vibrators to consolidate mass concrete shall not be less than 6000 rpm when immersed in the concrete for vibrating heads larger than 100 mm (4") diameter. The minimum frequency of vibrators with heads 100 mm (4") or less in diameter shall be 7000 rpm.

11.3.10.11 For thin walls or inaccessible portions of the forms, the concrete shall be assisted into place by tapping or vibrating the forms opposite the freshly placed concrete.

11.3.10.12 Concrete shall be thoroughly worked around the reinforcement and around embedded fixtures and conduits and into the corners of the forms. Special care shall be taken to rod along concrete surfaces which are to be exposed.

11.3.11 Construction Joints

11.3.11.1 Construction joints and keyways shall be built and located as shown on the Contractor's Drawings.

11.3.11.2 If for any reason additional joints are required, the proposed change shall only be made with the approval of the Owner after consultation with the Owner's Engineer.

11.3.12 Expansion Joints

11.3.12.1 Expansion joints where required, shall be so made that the necessary movement may occur with minimum resistance at the joint.

11.3.12.2 Reinforcement shall not extend across expansion joints and the breaker between the two sections shall be complete except for the water stop when used.

11.3.12.3 Exposed edges at expansion joints shall be rounded or beveled and the joint filled with elastic joint filler of approved quality.

11.3.13 Installation of Water Stop

11.3.13.1 All splices except simple butted types shall be shop fabricated.

11.3.13.2 The Contractor shall perform only butt type splices in the field and shall submit a copy of the splicing procedure to the Owner's Superintendent for approval prior to performing any of the work.

11.3.13.3 Splices shall have a tensile strength of not less than 60 percent of the unspliced material.

11.3.13.4 Special care shall be exercised to vibrate concrete thoroughly around all water stops.

11.3.13.5 The Contractor shall tie the outside edge of the water stop at not less than 1.25 m (4'-0") centers to either the reinforcing steel or the formwork so that it is not displaced while placing concrete.

11.3.13.6 Immediately before pouring adjoining concrete the protruding portion of the water stop shall be cleaned of all foreign material and placed in its correct position and the surface of the existing concrete shall be prepared in accordance with Article 11.3.3.3.

11.3.13.7 Contractor shall straighten and make any necessary repairs the existing water stop.

11.3.13.8 Connections to existing water stop shall be made in accordance with this Specification.

11.3.13.9 The Contractor shall apply joint water-proofing in accordance with the recommendations of the manufacturer.

11.3.14 Cold Weather Handling

The Contractor shall follow the recommendations and handle concrete in cold weather in accordance with ACI 306R-78.

11.3.15 Hot Weather Handling

11.3.15.1 The Contractor shall follow the recommendations and handle concrete in hot weather in accordance with ACI 305R-77.

11.3.15.2 The curing practices specified in Article 11.4 shall be rigidly adhered to.

11.4 CURING

11.4.1 General

Immediately after concrete has hardened sufficiently to prevent marring or water damage, the surfaces shall be cured by being kept continuously wet (moist curing) for a minimum period of 7 days (unless specified otherwise) or by the application of approved membrane curing compound.

11.4.2 Moist Curing

11.4.2.1 Exposed surfaces of concrete shall be covered with two thicknesses of an approved woven fabric, and approved quilted fiber blanket or other highly absorptive material capable of preventing the evaporation of mixing water. (AASHTO Designation M 182).

11.4.2.2 Such covering shall be thoroughly wet when applied and shall be kept saturated by spraying with water until the end of the cure period.

11.4.2.3 Wood wall forms may be left in place and considered as an adequate moisture retainer provided the tops of the forms are kept saturated so that water will run down between the forms and the concrete.

11.4.2.4 Steel wall forms will not be considered as providing an adequate moisture barrier during the curing process. They shall be removed after 24 hours except in such areas where required to support concrete subject to dead load flexural stresses.

11.4.2.5 Permanent metal forms may be considered as providing an adequate moisture barrier during the curing process if such forms are tight and curing is performed in accordance with the applicable sections of this Specification.

11.4.2.6 Large surface areas such as base slabs and floors may be diked and flooded for the minimum curing period if so desired.

11.4.3 Membrane Curing

11.4.3.1 Membrane curing compounds, where used, shall be applied in accordance with manufacturer's recommendations.

11.4.3.2 The formed surfaces of the concrete shall be thoroughly wetted by sprinkling with water immediately after stripping forms. Surface defects and tie rod holes shall be filled prior to the application of the membrane curing compound. There shall be no free water on the surface when the compound is applied.

11.4.3.3 The application of curing compounds to floor slabs shall be performed immediately after the floor surface has hardened sufficiently so that it will not be marred by the application. If the surface has dried out prior to application, it shall be saturated with water before applying the curing compound, but there shall be no free water on the surface at the time of application.

11.4.3.4 The application shall be made with spraying equipment capable of applying a smooth even textured coat.

11.4.3.5 If transparent compounds are used they shall contain a dye which soon fades out to assure adequate coverage.

11.4.3.6 Spraying equipment shall be of the pressure tank type with provision for continual agitation of the content during application. Compressed air lines shall be trapped to prevent moisture or oil from getting into the compound.

11.4.3.7 No curing compound shall be used without prior approval of the Owner's Superintendent.

11.4.3.8 The curing compound shall be of a composition that will remain intact as a sealing coat for 28 days after its application.

11.4.3.9 Whenever the curing membrane will be subject to damage from traffic or other cause, it shall be protected, after drying for 24 hours, by a layer of sand or earth not less than 25 mm (1") in thickness, or by other suitable and effective means.

11.4.3.10 Any damage to the membrane within the curing period shall be repaired without delay by a liberal application of curing compound.

11.4.3.11 No membrane curing compounds shall be used on the surfaces of construction joints.

11.4.4 Transition Period

11.4.4.1 Care should be taken either at the end of the curing period or upon removal of the forms to avoid sudden exposure to a temperature greatly different than that at which the concrete was cured. Particular attention should be given this matter in cold weather.

11.4.4.2 Exposure should be made in such manner as to allow time for the whole mass of concrete to approach gradually the temperature to which it is to be subjected immediately following the curing period.

11.4.4.3 In no case should the temperature change at the surface of the concrete be greater than 3°C (5°F) in any hour or be greater than 20°C (40°F) in 24 hours.

11.5 WALL FINISH

11.5.1 General

11.5.1.1 Smooth, solid concrete surfaces are required throughout the work.

11.5.1.2 Only those exposed concrete surfaces specifically designated on the Contractor's Drawings shall be rub finish or machine finished.

11.5.2 Initial Treatment

11.5.2.1 The surfaces to be rub or machine finished shall receive initial treatment as soon as the forms are removed.

11.5.2.2 In general, this will be not less than eight days after the placing of the concrete in that section.

11.5.2.3 All holes, pits or imperfections in the surface shall first be thoroughly wetted, scrubbed with a wire brush and compactly filled with mortar.

11.5.2.4 The entire surface shall then be thoroughly wetted down and kept wet while the finishing process is going on.

11.5.3 Final Treatment

11.5.3.1 For rub finish, rubbing shall be done by hand with a No. 20 carborundum stone and shall be continued until all hollows, line markings and surplus materials have been removed and a uniform surface has been attained.

11.5.3.2 Machine finishing shall be done with an approved machine and shall be continued until all line markings and surplus materials have been removed and a uniform surface has been attained.

11.5.3.3 Walls to be sack rubbed shall be thoroughly filled by rubbing a thick slurry of cement and water into the wall using a burlap rag. The slurry must be rubbed into the surface and care must be taken that no film is left on the surface.

11.6 FLOOR FINISH

11.6.1 Monolithic Finish

11.6.1.1 Where a separate or two coat finish is not specified on the Contractor's Drawings for floors, the floor shall be cast monolithically with the finish of the same mix as the rest of the slab.

11.6.1.2 Concrete shall be placed between screeds and struck off to the proper slope. Care should be exercised that no pockets or hollows form at the surface of the slab.

11.6.1.3 All concrete floors and finish, where so indicated on the Contractor's Drawings, shall slope evenly to floor drains.

11.6.1.4 The finish shall be floated into the slab by means of power floats followed by steel troweling as soon as the concrete has hardened sufficiently to prevent excess lines from working to the surface.

11.6.1.5 Following the first troweling, the floor shall be allowed to stand until it has set sufficiently to finish hard and smooth, and it shall receive a second steel troweling. The troweling shall remove all evidence of kneeboard impressions, trowel marks or other irregularities.

11.6.1.6 Floor surfaces that do not show a good smooth finish shall be ground to a true surface by the Contractor if directed by the Owner's Engineer. This work shall be performed at the Contractor's expense.

11.6.1.7 Particular care shall be exercised by the Contractor to ensure that the surfaces of concrete floors on either side of construction joints and especially at joints between existing and new floors are flush and level. Where concrete floors are to be covered, the Contractor shall provide a surface which will be suitable to receive the proposed covering and shall be subject to approval of the Owner's Engineer.

11.6.2 Curing

11.6.2.1 When the floor has hardened sufficiently so that it cannot be easily scratched, it shall be completely covered with sand, burlap or other approved material and kept continuously damp for a minimum of seven days as specified by Article 9.4 of this Specification.

11.6.3 Surface Hardener

11.6.3.1 Where noted on the Contractor's Drawings concrete floors shall be surfaced hardened using Master Builders Sani-Seal as manufactured by Master Builders or an equal as approved by the Owner's Superintendent. This finish shall be installed in strict accordance with the manufacturer's recommendation.

11.6.3.2 The Contractor shall make use of the manufacturer's field service in applying this floor finish.

12.0 PERSONNEL REQUIREMENTS

Not Applicable

13.0 INSPECTIONS AND TESTS

13.1 GENERAL

13.1.1 The Owner reserves the right to inspect the materials used and the workmanship.

13.1.2 The Contractor shall cooperate with the Owner's Engineer and shall permit him access to all parts of the work.

13.1.3 When requested the Contractor shall notify the Owner when the various parts are ready for inspection.

13.1.4 The Owner's Engineer will satisfy himself that all requirements of this Specification and reference specifications are met.

13.2 AUTHORITY TO REJECT

The Owner's Engineer will have authority to reject all materials furnished by the Contractor and workmanship not conforming to the Contractor's Drawings and this Specification any time defects are found during the progress of the work, and the Contractor shall promptly replace or repair same at the direction of the Owner at no increased cost to the Owner.

13.3 LIABILITY FOR DEFECTIVE MATERIAL

If the Owner's Engineer, through oversight or otherwise, has accepted material or work which is defective or contrary to this Specification or the Contractor's Drawings, this material, no matter in what stage of completion, may be rejected by the Owner.

13.4 INSPECTION OF CONCRETE

13.4.1 Testing of concrete will be performed in accordance with the specifications referred to in Article 5 of this Specification.

13.4.2 Testing will be in accordance with ASTM Specification C-29. The Contractor shall assist in making test specimens as requested.

13.4.3 If the slump of a batch of concrete does not meet the specified design slump, the Owner's Engineer may order that batch of concrete to be rejected at the cost of the Contractor.

13.4.4 Concrete cylinders to be used in compression tests shall be made and cured in accordance with ASTM Specification C-31.

13.4.5 Not less than four specimens shall be made for each test and not less than one test for each 100 cu. meters or major portion thereof of concrete for each class of work.

13.4.6 At least one set of test specimens for each day concrete is poured shall be made regardless of the amount of concrete poured that particular day.

13.4.7 Additional specimens may be required for testing when the temperature falls below 4.4°C (40°F). In such case, the cylinders shall be made at the request of the Owner's Engineer.

14.0 CLEANING, CORROSION PROTECTION AND COATING

Not Applicable

15.0 MARKING AND IDENTIFICATION

Not Applicable

16.0 PACKAGING, SHIPPING AND STORAGE

Not Applicable

17.0 ACCEPTANCE CRITERIA

17.1 The average strength of all cylinders shall be equal to or greater than the strength specified, and at least 90 percent of all the tests shall indicate a strength equal to or greater than the strength specified.

17.2 If the strength of the laboratory control cylinders for any portion of the structure falls below the compressive strength as specified, the Owner's Engineer shall have the right to order the Contractor to change the proportions of the water content for the remaining portion of the structure.

17.3 If the strength of the field cured cylinders falls below the required strength, the Owner's Engineer shall have the right to require conditions of temperatures and moisture necessary to secure the required strength and may require tests in accordance with the "Method of Obtaining and Testing Drilled Cores and Sawed Beams of Concrete" (ASTM C-42), or order load tests (ACI 318) to be made on portions of the structure so affected.

17.4 If any independent certified laboratory attests that the concrete as delivered was solely responsible for the failure of the concrete to reach strength the Owner's Engineer may order such concrete removed and replaced at the expense of the Contractor.

17.5 Where laboratory and/or field cured cylinders meet the strength requirements of this Specification but tests on in-place concrete fail to meet strength requirements, the Owner's Engineer may order such concrete removed and replaced at the expense of the Contractor, provided strength is below minimum acceptable requirements due to negligence or lack of care by the Contractor.

226

ATTACHMENT 2

TYPICAL CIRCULATING WATER ANALYSIS

Measuring Item	Unit	Value
Temperature	^{o}C	13-46°C (55-115°F)
pH		6.5-8.5
Conductivity	Micr-Mho/cm	2700
Total Solids	ppm	1500
Chloride	ppm as Cl	700
Total Hardness	ppm as $CaCO_3$	700-1000
Suspended Solids	ppm	150

ATTACHMENT 3

EQUIPMENT DATA

MECHANICAL DRAFT COOLING TOWER

One copy of this form shall be returned with each bid, with all the blanks filled in.

1. Bidder's Name _____

2. Manufacturer's Name _____

3. Quotation Number _____

4. Manufacturer's model No. _____

5. Design conditions:

a.	Dry air through tower	tonnes/hr (lb/hr)	_____
b.	Draft	kPa (inH_2O)	_____
c.	Temperature of air vapor mixture at tower outlet	°C (°F)	_____
d.	Velocity of air entering tower fill	mm/s (in/s)	_____
e.	Resistance of air inlet louvers	kPa (inH_2O)	_____
f.	Resistance of fill	kPa (inH_2O)	_____
g.	Resistance of drift eliminator	kPa (inH_2O)	_____

ATTACHMENT 3
(Continued)

EQUIPMENT DATA

MECHANICAL DRAFT COOLING TOWER

	h.	Fan stack exhaust velocity	m/s (fps)	_____
	i.	Water loading (fill cross section)	l/m^2 (gpm/ft^2)	_____
	j.	Drift loss	%	_____
	k.	Evaporation loss	l/s (gpm)	_____
	l.	L/G (Liquid/Gas) ratio		_____
6.	Design capacity of distribution system		l/s (gpm)	_____
7.	Maximum capacity of distribution system (without overflow)		l/s (gpm)	_____
8.	Pumping head above basin sill		m (ft)	_____
9.	Fill system:			
	a.	Air inlet area	m^2 (ft^2)	_____
	b.	Height of fill	m (ft)	_____
	c.	Number of decks		_____
	d.	Depth of fill	m (ft)	_____
	e.	Total fill volume	m^3 (ft^3)	_____
	f.	Total fill surface	m^2 (ft^2)	_____
	g.	Vertical spacing of splash bars	mm (in)	_____
	h.	Horizontal spacing of splash bars	mm (in)	_____

ATTACHMENT 3
(Continued)

EQUIPMENT DATA

MECHANICAL DRAFT COOLING TOWER

i. Width of splash bars mm (in) _____

10. Materials of construction:

a. Drift eliminators _____

b. Drift eliminator spacers _____

c. Louvers _____

d. Partitions _____

e. Deck _____

f. Water distribution piping _____

g. Water distribution basins _____

h. Fill support _____

i. Fill _____

j. Fill hangers _____

k. Splashers or spray nozzles _____

l. Valves _____

m. Stairways _____

n. Handrails _____

o. Access platforms; walkways _____;_____

p. Structural connectors _____

q. Bolts; nuts; washers _____:_____:_____

ATTACHMENT 3
(Continued)

EQUIPMENT DATA

MECHANICAL DRAFT COOLING TOWER

11. Dimensions, etc.:

a.	Basin dimension(s)	m (ft)	_____
b.	Basin water storage	l (gal)	_____
c.	Fan stack diameter at throat	m (ft)	_____
d.	Fan stack diameter at top	m (ft)	_____
e.	Hot-water inlet size	mm (in)	_____
f.	Cold-water outlet size	mm (in)	_____
g.	Height of inlet above basin curb	m (ft)	_____
h.	Minimum basin free board	m (ft)	_____

12. Construction:

a. Basin:

(1)	Concrete	m^3 (yd^3)	_____
(2)	Reinforcement	Kg (ton)	_____
	(a) Size		_____
	(b) Spacing		_____
(3)	Wall thickness	mm (in)	_____
(4)	Floor thickness	mm (in)	_____

ATTACHMENT 3
(Continued)

EQUIPMENT DATA

MECHANICAL DRAFT COOLING TOWER

b. Foundations:

(1) Concrete m^3 (yd^3) _____

(2) Reinforcement Kg (ton) _____

c. Shell and columns:

(1) Concrete m^3 (yd^3) _____

(2) Reinforcement Kg (ton) _____

(a) Shell - size; spacing _____ ; _____

(b) Columns - size; spacing _____ ; _____

(3) Column diameter mm (in) _____

d. Fill structure:

(1) Concrete m^3 (yd^3) _____

(2) Reinforcement Kg (ton) _____

13. Design Data:

a. Design wind at 30 ft km/h (mph) _____

b. Design dynamic pressure:

(1) 0 to 50 ft n/m^2 (psf) _____

(2) 50 to 150 ft n/m^2 (psf) _____

ATTACHMENT 3
(Continued)

EQUIPMENT DATA

MECHANICAL DRAFT COOLING TOWER

c. Total weight of cooling tower:

(1) Dry Kg (ton) _____

(2) Operating Kg (ton) _____

d. Design pressure of distribution piping kPa (psi) _____

14. Fans:

a. Manufacturer and model _____

b. Number of blades _____

c. Blade diameter m (ft) _____

d. Blade material _____

e. Hub material _____

f. Fan speed(s) rpm _____

g. Fan horsepower nominal kw (hp) _____
maximum @ °C ambient kW (hp) _____

h. At fan speed(s):

(1) Fan static efficiency % _____

(2) Fan total efficiency % _____

(3) Total static pressure kPa (inH_2O) _____

(4) Total pressure kPa (inH_2O) _____

(5) Air delivery per fan m^3/S (scfm) _____

ATTACHMENT 3
(Continued)

EQUIPMENT DATA

MECHANICAL DRAFT COOLING TOWER

i. Maximum input power required kW (hp) _____

j. Total inertia of speed reducer and fan referred to input shaft speed Kgm^2 ($lb\text{-}ft^2$) _____

15. Speed reducer:

a. Manufacturer _____

b. Model No. _____

c. Type _____

d. AGMA horsepower rating _____

e. Service factor at rated hp _____

f. Reduction ratio _____

16. Drive shaft:

a. Number _____

b. Type _____

c. Manufacturer _____

d. Length m (ft) _____

e. Diameter mm (in) _____

f. Rated kW (hp) _____

g. Material _____

h. Coupling material;type _____ ; _____

ATTACHMENT 3
(Continued)

EQUIPMENT DATA

MECHANICAL DRAFT COOLING TOWER

17. Flame spread rating:

    a. Test procedure _____

    b. Fill _____

    c. Eliminators _____

    d. Louvers _____

    e. Fan stacks _____

ATTACHMENT 4

SPECIFICATION EXCEPTIONS

The bidder certifies that the bid is complete and in absolute agreement with the requirements of this Specification, except as specifically stated below. (Use additional sheets if required.)

_____
(BIDDER'S NAME)

_____
(MANUFACTURER'S NAME)

_____
(QUOTATION NUMBER)

Attest: _____
(SIGNATURE) (DATE)

_____
(TITLE)

ATTACHMENT 5

Refer to Electrical Motor Specifications E-1 and E-2.

ATTACHMENT 6

Refer to Motor Data Sheets included in Electrical Motor Specifications E-1 and E-2.

ATTACHMENT 7

ACOUSTIC DATA
SUMMARY SHEET

MECHANICAL BLOWERS

Octave Band Geometric Mean Frequency (Hertz)	Equipment Without Acoustic Treatment or Guarantee	Equipment With Maximum Sound Level Guarantee of 90 dBA at 1 meter
63	_____	_____
125	_____	_____
250	_____	_____
500	_____	_____
1000	_____	_____
2000	_____	_____
4000	_____	_____
8000	_____	_____

Kind of levels given, indicate which of the following:

Sound Power Levels re 10 (exp -12) watt	_____	_____
Sound Pressure Levels re 2x10 (exp -4) microbars	_____	_____

If sound pressure levels are given, indicate both of the following:

Weighting network use A, B, C, or Linear (None)	_____	_____
Distance to sound source Feet or Meters	_____	_____

Vendor Comments: _____

_____

_____

_____

LAKHRA POWER FEASIBILITY STUDY

SPECIFICATION M-11

CYCLE MAKE-UP DEMINERALIZER SYSTEM

LPS/2/B1458/D1

SPECIFICATION M-11

CYCLE MAKE-UP DEMINERALIZER SYSTEM

TABLE OF CONTENTS

Item	Title	Page
1.0	DESCRIPTION OF WORK	1
2.0	WORK INCLUDED	1
3.0	WORK NOT INCLUDED	2
4.0	APPLICABLE CODES AND STANDARDS	3
5.0	SUPPLEMENTAL DATA	4
6.0	VENDOR DATA	4
7.0	DESIGN REQUIREMENTS	5
8.0	PERFORMANCE REQUIREMENTS	20
9.0	MATERIAL REQUIREMENTS	21
10.0	FABRICATION AND ASSEMBLY REQUIREMENTS	21
11.0	INSTALLATION REQUIREMENTS	22
12.0	PERSONNEL REQUIREMENTS	22
13.0	INSPECTIONS AND TESTS	23
14.0	CLEANING, CORROSION PROTECTION, AND COATING	23
15.0	MARKING AND IDENTIFICATION	23
16.0	PACKAGING, SHIPPING, AND STORAGE	24
17.0	ACCEPTANCE CRITERIA	24

ATTACHMENTS:

1. Motor Specification
2. Motor Data Sheet
3. Specification Summary Data Sheets - 4 pages
4. Acoustic Data Sheet - 1 page
5. Water Data

LAKHRA POWER FEASIBILITY STUDY

TECHNICAL SPECIFICATION M-11

CYCLE MAKE-UP DEMINERALIZER SYSTEMS

1.0 DESCRIPTION OF WORK

The Work to be performed consists of designing, fabricating, and delivering to the jobsite two 37.8 l/s (600 gal/min) cycle makeup demineralizer systems. This system will be used to supply demineralized water to the condensate storage tank or directly to the condenser at two 350 MW power plants, for the Water and Power Authority (WAPDA) to be located in Pakistan.

2.0 WORK INCLUDED

The Work to be performed shall include at least the following items:

a. Two lined cation demineralizer vessels.

b. Two lined strong cation demineralizer vessels.

c. Two lined weak anion demineralizer vessels.

d. One lined vacuum degasifier with packing, two vacuum pumps, and two degasifier booster pumps.

e. Two lined mixed bed demineralizer vessels.

f. The vessels shall be complete with internal piping, required nozzle connections, and manways. The demineralizer vessels shall have lifting lugs and shall be mounted on skids.

g. The required quantities of cation and anion exchange resins.

h. Two air blowers for mixing the resins in the mixed bed demineralizer.

i. An acid storage tank with two top-mounted, immersion-type acid pumps.

j. A heat traced liquid caustic storage tank with two caustic pumps.

k. An electrically heated hot water tank.

l. All interconnecting piping, valves, and instrumentation including the regeneration and recycle piping. The piping and valves for the skid-mounted units shall be assembled and mounted on the vessels before shipment.

m. A control panel.

n. A sampling station.

o. Structural and design information including equipment support interface, support hardware, bracket details, required anchor bolt sizes, anchor bolt locations, required anchor bolt materials, and specific anchor bolt torque requirements. Where there are no specific torque requirements, the Vendor shall so state.

p. Valve list.

q. The services of an engineer during installation and start-up.

r. Electric motor starters and controls.

3.0 WORK NOT INCLUDED

The following items are not included in the requirements of this section, but will be accomplished by others:

a. Concrete support pads for the equipment.

b. Lighting except where it is an integral part of the equipment of this system.

c. Water piping to and from the equipment of this system.

d. Waste drain pipe or trenches or both from this system.

e. Electrical facilities available:

   1. 400-volt, 50-hertz, 3-phase ac (for motors).

   2. 220-volt, 50-hertz, single-phase ac (for control).

   3. 220-volt, 50-hertz, single-phase (separate supply for panel lighting, space heaters, etc.).

   4. 125-volt (nominal), 140-volt (maximum) dc (for annunciators).

f. Oil-free instrument air at 552 kPa (80 lb/in^{2}g) for operation of pneumatic equipment.

g. Safety protection equipment including showers and eyewash.

h. Field erection.

i. Final coats of paint as required for the equipment after installation.

j. All external wiring and conduit.

4.0 APPLICABLE CODES AND STANDARDS

The following codes and standards are applicable to the Work, to the extent specified herein:

4.1 American National Standards Institute (ANSI):

a. B16.5, "Steel Pipe Flanges and Flanged Fittings"

b. B16.9, "Factory Made Wrought Steel Butt Welding"

c. B16.11, "Forged Steel Fittings, Socket Welding and Threaded"

d. B31.1, "Code for Pressure Pipe, Power Piping"

e. B36, "Wrought Steel, Wrought Iron and Stainless Steel Pipe"

f. C37.20, "Switchgear Assemblies Including Metal-Enclosed Bus"

4.2 American Society of Mechanical Engineers (ASME) Boiler and Pressure Vessel Code:

a. Section II, "Material Specifications"

b. Section VII, "Pressure Vessels"

c. Section IX, "Welding Qualifications"

4.3 American Society for Testing and Materials (ASTM):

a. D 635-72, "Test for Flammability of Self-Supporting Plastics"

4.4 Hydraulic Institute (HI) Standards.

4.5 Institute of Electrical and Electronic Engineers (IEEE) (Instrument and Controls)

244

4.6 Manufacturing Standards of the Valve and Fitting Industry. (Instruments and Controls)

4.7 National Electrical Manufacturers Association (NEMA):

Industrial Controls and Systems.

4.8 Steel Structures Painting Council (SSPC):

Commercial Blast Cleaning.

4.9 Regulations of the Occupational Safety and Health Administration (OSHA) applicable to the use and handling of sulfuric acid and caustic and permissible noise levels of operating equipment.

4.10 All materials shall be in accordance with ASTM Specifications. Any exceptions will be subject to the approval of the Buyer.

4.11 Application of codes and standards referenced herein requires the application of the latest issue date and of addenda adopted as of the date of the purchase order. Later revisions may be involved only by mutual agreement between Purchaser and Vendor.

5.0 SUPPLEMENTAL SPECIFICATIONS AND INFORMATION

5.1 The documents listed on the contents page as attachments are applicable to the work to the extent specified herein.

6.0 VENDOR DATA

6.1 Vendor data shall be furnished in accordance with the requirements indicated on the attached Vendor Data Requirements and Submittal Schedule.

6.2 Vendor shall furnish Certified Vendor Drawings, and include a list of drawings by category, such as general arrangement, foundation data, and electrical connection. If titles of the Certified Vendor Drawings are unknown, bidder shall submit the estimated number of drawings he will submit in each category.

6.3 The Vendor shall provide (No.) copies of an instruction book covering all equipment being furnished. The instruction book shall have hard front and back covers and have proper identification on the front cover as to contents.

6.4 Instruction books are not considered design manuals, and if any discrepancies arise between the Vendor's drawings and instruction books, or items omitted from the drawings which are contained in the instruction book recommendations, the

Vendor shall amend the instruction books or shall modify the installation at his own expense, whichever is deemed by the Owner as giving the most proper and operative final installation.

6.5 PERFORMANCE TEST REPORTS AND CERTIFICATIONS

The following performance reports and certifications shall be submitted to the Owner prior to acceptance of the Work:

a. Certified copies of all shop test data shall be forwarded to the Engineer for later distribution to the Owner.

b. The Vendor shall furnish procedures and instructions for all field installation and all required start-up tests and instruction books for the equipment being furnished.

6.6 SPECIAL TOOLS AND SPARE PARTS

6.6.1 The Vendor shall supply the following:

One set of any special tools required to operate and maintain his equipment. All tools shall be identified by name and number, and this number shall appear on drawings and instructions to indicate the application of the tools furnished and to permit the ordering of replacement tools.

6.6.2 The Vendor shall supply, with his proposal, pricing for 1 and 5 year supplies of spare parts.

7.0 DESIGN REQUIREMENTS

7.1 GENERAL

7.1.1 The cycle makeup demineralizer system shall normally provide a supply of acceptable quality demineralized water to the condensate storage tank or directly to the condenser during start-up or high-demand operating conditions.

7.1.2 The water supply to the makeup demineralizer system shall be from the filtered water storage tank of the makeup pretreatment system. An analysis of the water supply is included in Attachment 5. The system shall remove dissolved solids from the water by ion exchange through the cation, anion, and mixed bed demineralizer units and remove dissolved gases from the water by vacuum degasification.

7.1.3 The system shall provide 11.67 l/s (185 gal/min) of demineralized water per train and shall consist of two trains each having weak cation, strong cation, weak anion demineralizers, a mixed

bed demineralizer, and a common vacuum degasifier. The vacuum degasifier shall have the capacity to meet the requirements of the system with both trains in operation. Each train shall be designed for the full capacity of the system and for parallel operation.

NOTE: Normally one train shall satisfy the requirements of the system and the second train is in a regenerated standby condition.

7.1.4 Each train shall be mounted on steel skids. The skid installations shall be complete with shop-installed vessel interconnecting pipework, valves, tubing, wiring, and instrumentation. Vessel internals shall also be shop installed.

7.1.5 The demineralizer vessels shall be designed for the shutoff head of the high water level of the filtered water pumps. The strong anion demineralizer vessels and the mixed bed demineralizer vessels shall be designed for the shutoff head of the degasifier booster pumps.

7.1.6 The system shall include the required interlocks, pressure, and vacuum protection.

7.1.7 Control, from the control panel shall be a manual pushbutton initiated automatic operation.

7.1.8 The treated water shall discharge into the Owner's condensate storage tank or directly to the condenser.

7.1.9 The acid and caustic pump operation shall be required for automatic regeneration of the demineralizer resins by pumping regenerant to mix with dilution water using specially designed mixing tees.

7.1.10 The total acid and caustic regenerant solution quantities shall nearly neutralize each other or require minimum acid or caustic to give the waste solution a pH of 6.0 to 8.0.

7.1.11 Automatic trip of the system train shall be provided due to high conductivity of the anion unit or high differential conductivity of the cation unit.

7.1.12 Low flow, high conductivity or high silica of the mixed bed effluent shall alarm the condition and recycle the effluent back to the cation inlet.

7.1.13 A resin strainer shall be provided on the regenerant waste discharge line with differential pressure switches.

7.1.14 Equipment shall be designed and constructed in accordance with the applicable codes and standards specified in Article 4.0.

7.2 REGENERATION EQUIPMENT

7.2.1 Separate regeneration systems are required for sulfuric acid regeneration of the cation units, sodium hydroxide regeneration of the anion units, and sulfuric acid-sodium hydroxide regeneration of the mixed bed units. The cation and anion exchangers are generated in one operational sequence, and the mixed bed in another, in order to obtain near neutral regenerant waste solutions.

7.2.2 Filtered water shall be used for diluting the acid regenerant solution and degasified decationized water shall be used for diluting caustic regenerant solution.

7.2.3 Concentrated chemicals shall be pumped to mixing tees for dilution and delivering correct concentrations of chemicals to the regneration units. The valve arrangement and operation shall ensure that dilute chemicals or water cannot drain back to the concentrated chemical system.

7.2.4 The mixing tee, pipework, and valves shall be fabricated from material acceptable to the chemical concentrations involved. Flanged or socket weld connections shall be used. Valves for concentrated chemical service shall be Teflon-lined plug valves and valves for dilute chemical service shall be plastic-lined diaphragm valves. Preferred pipe materials shall be alloy 20 for concentrated acid service, 304 stainless steel for 50 percent caustic service, and lined pipe for dilute regenerant solution.

7.2.5 Regeneration Pumps:

a. The sulfuric acid pump shall be a vertical centrifugal submerged pump mounted on top of the acid storage tank. Two pumps shall be supplied, one pump shall be a stored spare.

b. The sodium hydroxide pump shall be a reciprocating diaphragm-type pump. The pump stroke adjustment shall be manual and a pulse dampener shall be provided on the discharge line to reduce pressure fluctuations. Two pumps shall be supplied, one pump shall be a standby spare.

c. Relief valves shall be located on the pump discharge lines which shall return the regenerant chemical back to its respective tank.

d. Piping, valves, and instrumentation shall be included with the pumps.

7.2.6 Bulk Acid and Caustic Storage Tanks:

a. One 40 m^3 (10,000 gallons) regenerant storage tank of 12mm (1/2 inch) thick carbon steel shall be provided for storage of 93 percent sulfuric acid and one 40 m^3 (10,000 gallon) regenerant storage tank of 12mm (1/2 inch) thick steel shall be provided for the storage of 50 percent caustic soda. Saddles for support of the tanks, on concrete foundations, shall extend 120° of the shell circumference.

b. The tanks shall be complete with flanged connections for the following:

1. Vent with drier and overflow for the acid storage tank.

2. Vent and overflow for the caustic tank.

3. 50mm (20") diameter manhole.

4. Bottom drain.

5. Caustic tank, bottom connection with internal pipe above tank floor for pump suction. Tank shall be heat traced and insulated by others.

6. Acid tank, top mounting flanges for pumps. One pump shall be supplied per this Specification and a second mounting flange shall be installed for the pump to be supplied by the Vendor for the condensate demineralizer system.

7. Truck fill line with drain.

8. Acid tank, level instrumentation.

9. Caustic tank level instrumentation.

10. External surfaces of each tank shall have all scale removed, sandblasted and receive a primer coating. Internals of the tanks snall be solvent cleaned.

7.3 HOT WATER TANK

7.3.1 One 1034 kPa (150 lb/in^2) hot water tank of ASME code construction shall be supplied and shall be sized to hold sufficient hot water for diluting the caustic required for a complete regeneration of the anion resin in both the anion and mixed bed demineralizers.

7.3.2 The water shall be heated with electric immersion-type heaters. Thermostatic controls shall maintain the water temperature at about 82°C (180°F). The immersion heaters shall be sized to heat the tank contents from ambient to operating temperature in 8 hours maximum time. Cold water is blended with 82°C (180°F) water to give the 49°C (120°F), which is required for the dilute caustic regenerant.

7.3.3 The unit shall be complete with inlet and outlet piping, valves, safety valves, instruments, and temperature blending equipment and controls.

7.4 AIR BLOWER

An air blower shall be furnished for mixing the resin in the mixed bed demineralizer after completing the resin regeneration. The noise level of the air blower equipment shall not exceed OSHA limits.

7.5 SAMPLE STATION

7.5.1 A sample station shall be provided to monitor the effluent water quality of each unit and the concentration of the regenerant solutions. The analyzer results shall be recorded on a recorder mounted on the control panel. Analyses which do not conform to preset limits shall annunciate an alarm on the control panel.

7.5.2 This rack shall be so arranged as to be located close to the demineralizer system in order that the sample lines can be kept as short as possible. This rack shall be complete with stainless steel tubing, stainless steel valves, stainless steel sink, counter top, drain, and all the required supporting brackets. There shall be a dusttight, NEMA 12 terminal box enclosed on this rack for connections to be made to the conductivity recorder which shall be mounted on the control panel.

7.6 SYSTEM RECYCLE

The effluent of each train shall be monitored for conductivity, silica, and flow. A low flow, high conductivity, or high silica of a system train effluent will cause effluent of the train to recycle back to the cation inlet until the fault is corrected or the train is removed from service for regeneration by the operator. Either alarm shall indicate that the system train is in recycle and shall require operator attention.

250

7.7 PIPING AND VALVES

The Vendor shall supply all unit piping, valves, fittings, and headers for complete installation of the makeup demineralizer system including the following:

7.7.1 Plastic-lined interconnecting piping shall be provided between vessels, degasifier, and booster pumps, and skid-assembled pipework shall be shop assembled. Plastic pipe is not acceptable.

7.7.2 Piping shall be supplied in accordance with the details shown on the flow diagrams. The supply shall include all joint materials, flange bolting, and pipe supports on the skids.

7.7.3 All pipework, valves, and instruments shall be furnished, fabricated, and shop installed between vessels mounted on skids.

7.7.4 All furnished pipe lengths and prefabricated pipe shall be matchmarked and shipped in convenient sections to the field for assembly by others. Included shall be pipe between skid-mounted equipment, the degasifier equipment, and regenerant equipment to vessels.

7.7.5 Flanged connections shall be provided for all service requirements of pipe over 65mm (2 1/2 inches). Piping 50mm (2 inches) and under shall be socket welded.

7.7.6 Fittings, such as elbows, tees, crosses, and reducers, shall be constructed from materials equivalent to the pipe with which they are used.

7.7.7 All piping shall be designed for installation in a neat rectangular form and shall allow convenient access to valves, instruments, and equipment. Adequate pipe supports shall be provided and shall be installed in a manner that does not impose undue stresses on pipe flanges. When a flanged joint is disconnected, there shall be no noticeable displacement of flange faces.

7.7.8 All surfaces which come in contact with regenerant solutions, demineralized water, and resins shall be lined or fabricated of corrosion resistant materials. Atmospheric pressure drains to waste downstream from the control valves shall be Schedule 10, 304 SS, or lined pipe.

7.7.9 All shop-assembled piping shall bear appropriate union labels.

7.8 TUBING

The Vendor shall provide all tubing required for the skid-mounted equipment supplied under this Specification except as otherwise specified. All notes on erection of piping shall, wherever relevant, be applicable to the erection of tubing.

7.8.1 Meter lines:

a. Tubing shall be seamless stainless steel, SAE 1010, suitable for bending and flaring, 9mm (3/8") o.d. x 1.25mm (.049") wall.

b. Fittings shall be Swagelock.

c. Valves shall be stainless steel, 600 lb screwed ends.

d. Meter lines containing liquid shall not be taken directly into the control panel. The flow should be converted to an electric or a pneumatic signal and transmitted to the panel.

7.8.2 Pneumatic Lines:

a. Tubing shall be seamless, soft annealed copper 6mm (1/4") o.d. x 1mm (.035") wall.

b. Fittings shall be Swagelock type, brass, or stainless steel.

c. Valves shall be bronze, 200 lb, and have screwed ends.

7.9 VALVES

All vent, drain, backwash, rinse, sampling, instrument, inlet, and outlet valves shall be provided as follows:

7.9.1 Air-operated diaphragm valves and controls shall be provided for remote-manual operation of the demineralizers from the control panel. Manual shutoff valves to the inlet and outlet headers shall be provided. Handwheels shall be included on all valves. Stem cover protectors shall be included where required. Valve position indicators shall be included.

7.9.2 "Fail Safe" pneumatic operated valves shall be used in regenerant, backwash, and vent operations.

250

7.9.3 Each Saunders-type diaphragm valve involved in the automatic operation shall have included an approved switch to operate two lamps on the board.

7.9.4 Sample and instrument valves and connections shall be Type 304 or 316 stainless steel.

7.9.5 Multiport valves are not acceptable.

7.9.6 Valves supplied for use with 66° Be sulfuric acid and 50 percent caustic shall be Teflon-lined.

7.9.7 Isolation valves are required for all instrumentation.

7.10 DEGASIFIER

7.10.1 Vacuum Degasifier

a. A single vacuum degasifier shall be provided for the removal of carbon dioxide and oxygen from the effluent of the cation exchanger. The unit shall be capable of producing an effluent containing not more than 5 mg/l CO_2 and 0.1 mg/l O_2 when operating at a maximum flow rate of 75.7 l/s (1,200 gal/min) and at 7.2°C (45°F). A two-stage degasification at progressively reducing pressure will be acceptable if it will provide a more efficient oxygen reduction. The unit shall also be capable of providing adequate degasification at flow rates down to 2 l/s (31.7 gal/min).

b. The vessel shall be designed for operation from full vacuum 760mm of mercury to a pressure of 1034 kPa (150 lb/in^2, g) and shall include both a degasing section and a storage section.

c. The high surface area packing shall be a maximum of 25.4mm (1 inch) in size and have a minimum surface area of 246m^2 per m^3 (75 ft^2/c.ft) of packing.

d. All internal distribution elements shall be fabricated of 316 stainless steel and shall be shop installed before shipment. To prevent loss of packing, screens shall be installed in all lines where loss can occur. Vessel internals shall be anchored securely and braced to withstand the loadings caused during shipping and operation.

e. Manways shall be provided in each degasification section nand in the water storage section. They shall be a minimum of 450mm (18 inches) in diameter and shall be supplied with handles and lifting eyes or davits if the weight is excessive.

f. Handholes shall be provided at each degasification stage for removing the packing.

g. The tower shall be supplied with all valves, piping instrumentation, and controls for satisfactory operation. These items, including the tower packing material, shall be supplied loose for installation in the field.

7.10.2 Vacuum Pumps

a. A vacuum pump shall be provided for each stage of degasification to maintain the required pressure at which degasification is to be attained. A standby pump shall also be furnished.

b. The pumps shall be Nash or equal with motor and automatic devices to prevent sealing water from being sucked into the degasifier when the pumps stop.

c. The pumps shall be complete with all necessary connections and valves for the cooling water supply and venting the vapor.

7.10.3 Degasifier Booster Pumps

a. Three half-size degasifier booster pumps shall be supplied; two operational and one standby, sized to deliver _____ l/s (gal/min) against a TDH which is sufficient to deliver the water through the following units and to allow a minimum available head of 15 meters (50 feet) to deliver the water to the Owner's condensate storage tank.

b. The pumps shall be selected carefully with the minimum NPSH requirements possible and shall be located and piped to the degasified water storage tank in such a way that these requirements are met.

c. They shall be constructed throughout with materials suitable for operation in degasified, decationized water, and shall have mechanical seals. Provision shall be made on the pumps for venting of the casing to the vacuum degasifier water storage section.

d. The pumps shall be complete with motor, drain, and vent connections.

7.11 INSTRUMENTS AND CONTROLS

The Vendor shall furnish instrumentation in conformance to specific requirements listed below and general requirements in

254

attached "Instruments and Accessories." Controlling and monitoring demineralizer operation and regeneration shall include the following:

7.11.1 Control Panel

7.11.1.1 One control cubicle with all components to be readily accessible for maintenance, complete with alarm system, timers, control switches, instruments, indicating lights, wiring to terminal points, and tubing to bulkhead conections shall be furnished. All terminals shall be permanently labeled and there shall be no more than two wires on each terminal. Components shall not be mounted on cubicle doors. The cubicle shall be NEMA 12 dusttight and driptight construction and equipped with air filter and blower for internal pressurizing. Panels shall be fabricated of not less than 5mm (3/16")steel plate. Access doors shall be provided at each end of the panel. The bottom plate of the cubicle shall be so supported that the floor will not sag or deflect when traversed by personnel. Provisions shall be made for top/bottom entry of cable into the panel.

7.11.1.2 The control panel shall be equipped with a 5mm x 25mm (3/16 x 1") copper ground bus extending the entire length and with steel structure connected to the bus so as to effectively ground the entire structure. A double indent compression type terminal shall be provided at each end of the ground bus for connection to the Owner's No. 4/0 AWG bare stranded copper ground cable and also for power leads.

7.11.2 Control Panel Wiring

Control equipment to be installed in the cubicle shall be of the following makes and types:

a. Control relays shall be 230-volt ac, plug-in, industrial type control relays with dust covers.

b. Internal or step timers shall be 230-volt, 50-hertz ac.

7.11.3 Fluorescent canopy lighting shall be provided for the panel and fluorescent lighting shall be provided inside the cubicle. One 20-watt fluorescent fixture shall be provided for each 1.2m (4 feet) of board length or fraction thereof. The lights shall be activated by opening the access doors on enclosed panels or by a switch on open panels. A duplex grounded type receptacle shall be provided for each 2.4m (8 feet) of board length or fraction thereof. Provision shall be made to mount the control panel on the Owner's curb foundation.

7.11.4 Cycle controllers or sequence timers, relays, air solenoid valves, and instruments for automatic regeneration of the resins after manual initiation shall be furnished. Provision shall be made for manual override of valve operations. All relays shall be readily accessible for maintenance and shall be located not less than 45cm (18 inches) from the floor.

7.11.5 Electrical control switches shall be provided for the Vendor's pumps, air blowers, and mixers. All control switches shall be GE type SBM, or equal, with pistol grip handles for control functions and oval handles for permissive functions. All pushbuttons and pushbutton type selector switches and indication lights shall be heavy duty, oil-tight, conforming to NEMA ICS 2-216.

7.11.6 Indicating lamps shall be resistor type with low voltage, long life lamps. The color caps shall be as follows:

a. Green - To indicate OFF or NONOPERATING position.

b. Red - To indicate ON or OPERATING position.

c. Amber - To indicate ABNORMAL condition with alarm.

d. Blue - To indicate limit conditions.

e. White - To indicate condition such as hot line and available power.

7.11.7 A multipoint cabinet type static annunciator, annunciator supplier to be selected by the Engineer later, with at least four spares, shall be provided on the control panel. Two separate alarms shall be transmitted to the central control room to indicate cycle makeup demineralizer trouble when any alarm condition exists and another to indicate loss of primary or secondary control power point shall be included. Manufacturer and model shall be specified later by Engineer.

7.11.8 Solenoid air control valves shall be the fail-safe on loss of voltage, or loss of air pressure type, 230-volt ac. Block type solenoids will not be permitted. Solenoids shall not be mounted in the control cubicle. Where multiple solenoids are mounted in manifold connections, they shall be mounted in a box with suitable electric disconnect plugs mounted on the outside of the box. The Vendor shall provide overpressure protection for his components. Solenoid air control valves shall include all air regulators and air filters, air reservoirs, and segregating valves as required for the complete control system. Each solenoid valve shall be provided with manual override for use in case of electric power failure.

7.11.9 A distribution panel shall be provided within the control cubicle for control and lighting services. Separate circuits shall be provided for instrument chart motor drives, illumination, and convenience outlets. Fuses and fuse blocks shall be provided for those instruments where fusing is not integral with service circuit.

7.11.10 All pneumatic tubing shall terminate in bulkhead fittings (where applicable). Ample space shall be provided between fittings to facilitate the Owner's connections. Instrument shutoff valves and test ties with plugs shall be provided in each line. All air supplied to control valves shall be valved individually. Tubing shall be adequately supported and protected. Valves in instrument lines shall be supported independently of tubing.

7.11.11 Steel panel board surfaces shall be thoroughly cleaned and bonderized, followed immediately by an application of rust resisting paint. A finish coat shall be provided (to be specified later).

7.11.12 Equipment supplied by the Vendor shall be acceptable to field personnel for erection.

7.11.13 A 24-hour clock shall be mounted on the face of the panel.

7.11.14 The following instruments and accessories shall be mounted on the control section of the panel:

a. Switches and indicating lights for the following:

1. Acid regenerant pumps.

2. Caustic regenerant pumps.

3. Degasifier booster pumps.

4. Degasifier vacuum pumps.

5. Resin mix blower.

b. Pushbutton switches and indication lights:

1. Initiate automatic regeneration.

2. Service operation.

c. Indicators:

1. Condensate storage tank level.

2. Acid storage tank level.

3. Caustic storage tank level.

d. Recorders:

1. Flow:

System effluent.

2. Conductivity (for each train):

(a) Weak cation unit.

(b) Cation unit.

(c) Weak anion unit.

(d) Mixed Bed unit.

(e) Regenerant acid concentration.

(f) Regenerant caustic concentration.

3. pH:

System effluent.

4. Silica:

Mixed bed effluent.

e. Indicating lights:

Lights shall be installed on the fascia of the panels for indicating the position of all operated pumps and valves for system regeneration and service operation.

f. Timers:

Adjustable timers shall be installed on the fascia of the panel for all steps of the regeneration sequence operation.

g. Alarms:

The annunciator shall have a sufficient number of windows for 26 alarms plus 6 spares. The windows required are as follows:

	Window	Alarm
1.	Filtered Water	Low Pressure
2.	Weak Cation Demineralizer A, B	Conductivity
3.	Strong Cation Demineralizer A, B	Conductivity
4.	Weak Anion Demineralizer A, B	Flow Limit Exceeded
5.	Vacuum Degasifier Water Storage	High-Low Level
6.	Vacuum Degasifier	High Pressure
7.	Degasifier Booster Pumps	Low Flow
8.	Mixed Bed Demineralizer A, B	Flow Limit Exceeded
9.	Mixed Bed Demineralizer A	High Conductivity
10.	Mixed Bed Demineralizer B	High Conductivity
11.	Mixed Bed Demineralizer A	High Silica
12.	Mixed Bed Demineralizer B	High Silica
13.	Mixed Bed Demineralizer A	Low Flow
14.	Mixed Bed Demineralizer B	Low Flow
15.	Demineralizer Train A	Recycle
16.	Demineralizer Train B	Recycle
17.	Demineralizer System Effluent	High-Low pH
18.	Acid Storage Tank	Low Level

	Window	Alarm
19.	Acid Dilution Water	Low Flow
20.	Dilute Sulfuric Acid	Concentration High-Low
21.	Caustic Storage Tank	Low Level
22.	Caustic Storage Tank	High-Low Temperature
23.	Caustic Dilution Water	Low Flow
24.	Dilute Caustic Soda	High-Low Concentration
25.	Hot Water Tank	High-Temperature
26.	Air Blower	Low Flow

7.12 ACCESSORIES

The following accessories shall be mounted inside the panel:

a. Relays.

b. Solenoids.

c. Programming device.

d. Terminal blocks.

e. Instrument air filter regulators.

7.13 MOTORS

See Motor Specifications, Attachment 1.

7.14 ACOUSTIC REQUIREMENTS

7.14.1 The Vendor shall submit as part of his Proposal a tabulation of octave band sound power levels in accordance with 7.14.2 below for the equipment being quoted without acoustic treatment or guarantee. The Proposal will be considered incomplete without this information.

7.14.2 The Vendor shall submit as part of his Proposal an additional price for a guaranteed maximum sound level of 90 dBA (90 decibels, A network weighted) when measured with a Type I precision sound level meter at slow response and at a distance of 1 meter (3 feet) in any direction from the nearest surface of the equipment. The Vendor shall also submit with his Proposal a

tabulation of octave band sound levels in accordance with 7.14.3 below for the equipment in the sound attenuated condition.

7.14.3 The Vendor shall complete and submit as part of his Proposal the attached Acoustic Data Summary Sheet. It is preferred that the octave band levels be sound power levels in decibels with a reference power of 10 (exponent -12) watt. However, sound pressure levels in decibels with a reference pressure of 0.0002 microbars will be acceptable providing the weighting network and distance to the sound source are indicated. In the event acoustic data for similar equipment will be acceptable. However, the equipment differences should be indicated and the Vendor's estimate of the acoustical effect of these differences should be indicated.

7.14.4 The maximum sound power or sound pressure levels will be verified by measurements at the installation site at the Purchaser's discretion. The Purchaser's Engineer will perform these requested tests in accordance with standard test procedures as applicable to the particular installation or type of equipment.

7.14.5 Where no specific testing procedure is applicable, verification tests shall be conducted in accordance with the following:

7.14.6 Institute of Electrical and Electronics Engineers (IEEE) Standard 85, "IEEE Test Procedure for Airborne Sound Measurements on Rotating Electric Machinery."

7.14.7 American National Standards Institute (ANSI) S1.2, "Method for the Physical Measurement of Sound."

8.0 PERFORMANCE REQUIREMENTS

8.1 WATER QUALITY

8.1.1 See Attachment #5

8.1.2 The system shall be designed to produce an effluent from the mixed bed demineralizer of at least the following quality:

a.	Conductivity µmhos	0.5	
b.	pH		6.0 to 8.0
c.	Silica, as SiO_2	mg/l	0.02
d.	Oxygen at 7.2°C (45°F) as O_2	mg/l	0.1

8.2 RESINS

The resins to be supplied shall be warranted to maintain their initial exchange capacities within guaranteed limits based on a period of 5 years operation.

a.	Cation resin	%	10
b.	Anion resin	%	10

9.0 MATERIAL REQUIREMENTS

See 7.0 DESIGN REQUIREMENTS

10.0 FABRICATION AND ASSEMBLY REQUIREMENTS

10.1 VESSEL DESIGN

10.1.1 All vessels shall be of welded construction and be in accordance with the latest requirements of the ASME Code Section VIII. Each vessel shall bear an ASME code stamp for the specified working pressure. All data reports required by the code shall be submitted to the Engineer for record.

10.1.2 Pressure relief valves shall be provided on all vessels as required by the ASME Code. Relief valves shall discharge to a suitable drain header.

10.1.3 Each vessel shall be provided with an 450mm (18-inch) o.d. flanged manway. Manhole covers shall be provided with lifting handles and davits. Manhole covers and bolting shall be fitted carefully and matchmarked so that the covers may easily be removed and replaced.

10.1.4 All connections to the vessels shall be flanged.

10.1.5 Lifting lugs shall be provided.

10.1.6 The vesels shall be of suitable height to provide for not less than 100 percent bed expansion.

10.1.7 Each vessel shall have two sight glass windows located at the operational level which shall be spaced 180° apart. The mixed bed vessels shall have additional sight glasses located at the resin interface. The sight glasses shall provide a minimum viewing aperture of 305mm (12") high and 76mm (3") wide. The sight glass frame shall be welded to the shell and be in accordance with the code requirements.

10.1.8 The vessels shall have dished heads. Dished vessel bottoms that concave into the vessel interiors are not acceptable. The underdrain system shall be devoid of subfill.

10.1.9 Each vessel shall have connections for influent and effluent water, inlet and outlet regenerants, drain, vent, pressure relief, bottom resin removal, and air for scrubbing resins and bumping resin beds.

10.1.10 Each vessel shall have structural steel supporting legs and be drilled for skid mounting bolts. The skid frames shall be drilled for foundation bolts.

10.1.11 The demineralizer vessels and vacuum degasifier shall be lined with 5mm (3/16") thick rubber.

10.1.12 The lining shall completely cover each flange.

10.1.13 The vessel internal underdrain header and lateral distribution systems shall be 316 stainless steel the acid regenerant systems. Vessel internals for caustic regenerant systems shall be 304 stainless steel. Plastic vessel internals are not acceptable.

10.1.14 All vessel internals shall be anchored securely and braced to withstand the loadings caused during shipping and operation.

10.1.15 The regenerant solution and rinses shall discharge to a regenerant waste neutralization tank.

10.1.16 A recirculation line shall be provided from the system effluent to the cation inlet. Initiation of this function shall be automatic based on full condensate storage tank level or unsuitable effluent.

11.0 INSTALLATION AND START-UP

The Vendor shall provide the services of an engineer for the installation and startup of the system to insure that the equipment is properly installed, has been brought into satisfactory operation, and that the Owner's personnel are instructed in the operation and maintenance of the equipment.

12.0 PERSONNEL REQUIREMENTS

The Vendor shall include supervision of installation and the start-up engineering services priced separately in his proposal.

13.0 INSPECTIONS AND TESTS

13.1 The Purchaser's Engineer shall at all times have free access to the Vendor's shops and records which shall be kept and made available to the Purchaser's Engineer.

13.2 The Purchaser's Engineer's Inspectors will have the authority to refuse "release for shipment" if all requirements of approval drawings, procedures, specification, purchase documents, and codes or standards have not been fulfilled or if certified copies of required inspection and test reports are not available for review.

14.0 CLEANING, CORROSION PROTECTION, AND COATING

14.1 Tropicalisation: In choosing materials and their finishes due regard shall be given to the ambient conditions in which equipment is to operate. Consideration shall be given to the hot climate and a humid and/or dust laden atmosphere.

14.2 Painting: All ferrous parts shall be free of rust and loose mill scale and shall receive one shop coat of zinc-chromate iron oxide alkyd resin primer. Motors and reducers shall be furnished with the manufacturer's standard paint.

14.3 Any stainless steel, nonferrous or galvanized material shall not be painted.

15.0 MARKING AND IDENTIFICATION

15.1 Each package, skid, box, and crate shall be marked on the outside with the following information so that it is readily visible:

a. (OWNER'S name)
(Project identification)
(Street address)
(City, state, and zip code)

b. The OWNER'S purchase order number.

c. Any special instructions for handling.

d. The weight and lifting points or center of gravity.

e. The Engineer-assigned tag number(s) and Bill of Material number(s).

15.2 Tagging

15.2.1 Pumps shall be supplied with punched metal tags, permanently affixed, giving the following:

a. Tag number.

b. Pump model.

c. Standard dimension designation.

d. Serial number.

e. Size.

f. Impeller diameter (maximum and installed).

g. Materials of construction.

h. Design pressure and temperature.

i. Capacity.

15.2.2 Tag numbers shall be in accordance with the attached Tagging List.

16.0 PACKAGING, SHIPPING, AND STORAGE

Sound loading practice shall be followed to ensure safe shipment. Units shall be cradled and blocked as required with heavy timbers or similar material to eliminate movement under any reasonable handling condition. Chains, straps, cables or similar devices shall be used to furnish the required restraint during shipping. Units shall be tagged in accordance with Paragraph 15.0

17.0 ACCEPTANCE CRITERIA

The Vendor shall submit all requested data before submitting the work for acceptance including the following:

a. Structural and design information as stated in 2.0, p.

b. Certified drawings.

c. Completion of performance tests, test reports and certifications.

ATTACHMENT 1

Refer to Electrical Motor Specifications E-1 and E-2.

ATTACHMENT 2

Refer to Motor Data Sheets included in Electrical Motor Specifications E-1 and E-2.

ATTACHMENT 3

SUMMARY DATA SHEETS

1. Drawings:

   a. List of drawings submitted _____

   _____

   _____

   _____

   b. Time required for submission of of certified drawings in sufficient detail to permit the Engineer to complete installation drawings. weeks _____

   c. Time required for submission of final drawings assuming all drawings are retruned by the Enginner within 3 weeks. weeks _____

   d. Time required for delivery of equipment after receipt of order. weeks _____

2. Weak Cation Unit:

   a. Inside diameter mm (ft-in) _____

   b. Straight side mm(ft-in) _____

   c. Rated flow l/s (gal/min) _____

   d. Design pressure kPa (lb/in^{2}g) _____

   e. Design temperature ^oC (^oF) _____

   f. Thickness:

      (1) Shell mm (in) _____

      (2) Head mm (in) _____

ATTACHMENT 3
(Continued)

g. Material Spec.:

(1) Shell _____

(2) Head _____

h. Lining: thickness; material mm (in) _____

i. Internals:

(1) Inlet distributor:

(a) Type _____

(b) Material _____

(2) Reagenerant distributor:

(a) Type _____

(b) Material _____

(3) Underdrain:

(a) Type _____

(b) Material _____

j. Resin:

(1) Manufacturer _____

(2) Type _____

k. Bed depth: volume m^3 (ft^3) _____

l. Rated flow cap. per unit m^3 (gal) _____

m. Sulfuric acid (93%) per regen. kg (lb) _____

n. Main piping to headers: size; material mm (in) _____ ; _____

o. Main header: size; material mm (in) _____ ; _____

ATTACHMENT 3
(Continued)

p. Regen. quantities

	l/s Rate (gal/min)	Time minutes	Total m^3 (gallons)
(1) Backwash	_____	_____	_____
(2) Acid injection	_____	_____	_____
(3) Slow rinse	_____	_____	_____
(4) Fast rinse	_____	_____	_____
(5) Total to waste	_____	_____	_____

q. Weight of unit and internals kg (lb) _____

r. Flooded weight: including resin kg (lb) _____

s. Pressure drop at design flow rate: header to header kPa (lb/in^{2}g) _____

3. Strong Cation Unit:

a. Inside diameter mm (ft-in) _____

b. Straight side mm (ft-in) _____

c. Rated flow l/s (gal/min) _____

d. Design pressure kPa (lb/in^{2}g) _____

e. Design temperature ^oC (^oF) _____

f. Thickness:

(1) Shell mm (in) _____

(2) Head mm (in) _____

g. Material Spec.:

(1) Shell _____

(2) Head _____

ATTACHMENT 3
(Continued)

h.	Lining: Thickness; material	mm (in)	_____ ; _____
i.	Internals:		
	(1) Inlet distributor:		
	(a) Type		_____
	(b) Material		_____
	(2) Regenerant distributor:		
	(a) Type		_____
	(b) Material		_____
	(3) Underdrain:		
	(a) Type		_____
	(b) Material		_____
j.	Resin:		
	(1) Manufacturer		_____
	(2) Type		_____
k.	Bed depth: volume	m^3 (ft^3)	_____
l.	Rated flow cap. per unit	m^3 (gal)	_____
m.	Sulfuric acid (93%) per regen.	kg (lb)	_____
n.	Main piping to headers: size; material	mm (in)	_____ ; _____
o.	Main header: size; material	mm (in)	_____ ; _____

ATTACHMENT 3
(Continued)

p. Regen. quantities

	l/s Rate (gal/min)	Time minutes	Total m^3 (gallons)
(1) Backwash	_____	_____	_____
(2) Acid injection	_____	_____	_____
(3) Slow rinse	_____	_____	_____
(4) Fast rinse	_____	_____	_____
(5) Total to waste	_____	_____	_____

q. Weight of unit and internals kg (lb) _____

r. Flooded weight: including resin kg (lb) _____

s. Pressure drop at design flow rate: header to header kPa (lb/in^{2}g) _____

3. Weak Anion Unit:

a. Inside diameter mm (ft-in) _____

b. Straight side mm (ft-in) _____

c. Rated flow l/s (gal/min) _____

d. Design pressure kPa (lb/in^{2}g) _____

e. Design temperature ^oC (^oF) _____

f. Thickness:

(1) Shell mm (in) _____

(2) Head mm (in) _____

g. Material Spec.:

(1) Shell _____

(2) Head _____

ATTACHMENT 3
(Continued)

h. Lining: Thickness; material mm (in) _____ ; _____

i. Internals:

(1) Inlet distributor:

(a) Type _____

(b) Material _____

(2) Regenerant distributor:

(a) Type _____

(b) Material _____

(3) Underdrain:

(a) Type _____

(b) Material _____

j. Resin:

(1) Manufacturer; type _____

k. Bed depth: volume m^3 (ft^3) _____

l. Rated flow cap. per unit m^3 (gal) _____

m. Caustic (50%) per regen. kg (lb) _____

n. Main piping to headers: size; material mm (in) _____ ; _____

o. Main header: size; material mm (in) _____ ; _____

p. Regen. quantities

	l/s	Rate (gal/min)	Time minutes	Total m^3 (gallons)
(1) Backwash		_____	_____	_____
(2) Caustic injection		_____	_____	_____

ATTACHMENT 3
(Continued)

p. Regen. quantities (Cont'd)

	l/s Rate (gal/min)	Time minutes	Total m^3 (gallons)
(3) Slow rinse	_____	_____	_____
(4) Fast rinse	_____	_____	_____
(5) Total to waste	_____	_____	_____

q. Weight of unit and internals kg (lb) _____

r. Flooded weight: including resin kg (lb) _____

s. Pressure drop at design flow rate: header to header kPa (lb/in^{2}g) _____

4. Degasifier:

a. Rated flow l/s (gal/min) _____

b. Degas. section:

Inside diameter; str. side mm (ft-in) _____

c. Storage section:

Inside diameter; str. side mm (ft-in) _____

d. Design pressure mmHg (in Hg); kPa (lb/in^{2}g) _____

e. Design temperature ^{o}C (^{o}F) _____

f. Thickness:

(1) Shell mm (in) _____

(2) Head mm (in) _____

g. Material Spec.:

(1) Shell _____

(2) Head _____

ATTACHMENT 3
(Continued)

h.	Lining: Thickness; material	mm (in)	_____ ; _____
i.	Storage capacity, minimum	m^3 (gal)	_____
j.	Max CO_2 content of effluent	mg/l	_____
k.	Max O_2 content of effluent	mg/l, °C	_____ ; _____
l.	Weight of unit and internals	kg (lb)	_____
m.	Flood weight, including packing	kg (lb)	_____
n.	Packing, mfr; type; nom. size	m^3 (ft^3)	_____ ; _____ ; _____

5. Vacuum Pump:

a.	Manufacturer		_____
b.	Type; model No.		_____ ; _____
c.	Capacity, head	l/s (gal/min); m(ft)	_____
d.	Power requirements	Kw (hp) V, A	_____ ; _____ ; _____
e.	Speed	r/min	_____
f.	Material:		
	(1) Shaft		_____
	(2) Impeller		_____
	(3) Casing		_____
g.	NPSH requirements	m (ft)	_____
h.	Weight, complete with motor	kg (lb)	_____

6. Mixed Bed Demineralizer:

a.	Inside diameter	mm (ft-in)	_____
b.	Straight side	mm (ft-in)	_____
c.	Rated flow	l/s (gal/min)	_____

ATTACHMENT 3
(Continued)

d. Design pressure kPa (lb/in^{2}g) _____

e. Design temperature ^{o}C (^{o}F) _____

f. Thickness:

(1) Shell mm (in) _____

(2) Head mm (in) _____

g. Material Spec.:

(1) Shell _____

(2) Head _____

h. Lining: Thickness; material mm (in) _____;_____

i. Internals:

(1) Inlet distributor:

(a) Type _____

(b) Material _____

(2) Regenerant distributor:

(a) Type _____

(b) Material _____

(3) Underdrain:

(a) Type _____

(b) Material _____

(4) Underdrain:

(a) Type _____

(b) Material _____

j. Cation resin: mfr; type _____;_____

ATTACHMENT 3
(Continued)

k. Anion resin: mfr; type _____;_____

l. Bed depth: volume mm (in) m^3 (ft^3) _____

m. Rated flow cap. per unit m^3 (gal) _____

n. Sulfuric acid (93%) per regen. m^3 (gal) _____

o. Caustic (100%) per regen. kg (lb) _____

p. Main piping to headers: size; material mm (in) _____;_____

q. Main header: size; material mm (in) _____;_____

r. Regen. quantities

	l/s Rate (gal/min)	Time minutes	Total M^3 (gallons)
(1) Backwash	_____	_____	_____
(2) Caustic injection	_____	_____	_____
(3) Slow rinse	_____	_____	_____
(4) Fast rinse	_____	_____	_____
(5) Total to waste	_____	_____	_____

s. Weight of unit and internals kg (lb) _____

t. Flooded weight: including resin kg (lb) _____

u. Pressure drop at design flow rate: header to header kPa (lb/in^2g) _____

7. Regeneration Equipment:

a. Type of acid 93% H_2SO_4

b. Type of caustic 50% NaOH

8. Pumps:

	Acid	Caustic
a. Mfr; type	_____;	_____;
b. Head material	_____	_____

ATTACHMENT 3
(Continued)

c. Capacity; head l/s (gal/min); m (ft) ____;____;____

d. Type flow control ____

e. Power Requirements Kw (HP), V;A ____

f. Speed rpm ____

9. Hotwater Tank:

a. Inside diameter mm (ft-in) ____

b. Straight side mm (ft-in) ____

c. Capacity m^3 (gal) ____

d. Design pressure kPa (lb/in^2g) ____

e. Design temperature ^oC (^oF) ____

f. Thickness:

(1) Shell mm (in) ____

(2) Head mm (in) ____

g. Material spec.; lining ____;____

h. Rating of heating element Kw, V, A ____

i. Temperature control: mfr; type ____;____

10. Demineralizer Control Board
Physical Data:

a. Dimensions:

(1) Length ____

(2) Width ____

(3) Height ____

(4) Operatng weight ____

ATTACHMENT 3
(Continued)

b. Blower:

(1) Number _____

(2) Manufacturer _____

(3) Rating m^3/s (ft^3/min) _____

11. Flow Recorders:

a. Quantity _____

b. Service _____

c. Manufacturer _____

d. Model No. _____

e. Range l/s (gal/min) _____

f. Type chart, etc. _____

h. Flow transmitters: mfr; model _____ ; _____

12. Conductivity Recorders:

Quantity, total: _____

a. Service	_____	_____	_____	_____
b. Quantity	_____	_____	_____	_____
c. Number of points	_____	_____	_____	_____
d. Number of points	_____	_____	_____	_____
e. Manufacturer	_____	_____	_____	_____
f. Model No.	_____	_____	_____	_____
g. Illumination, type of internal	_____	_____	_____	_____
h. Range, mhos per cm^3	_____	_____	_____	_____

ATTACHMENT 3
(Continued)

13. Flow Indicators:

Quantity, total: _____

a. Service	_____	_____	_____	_____
b. Quantity	_____	_____	_____	_____
c. Manufacturer	_____	_____	_____	_____
d. Model No.	_____	_____	_____	_____
e. Type	_____	_____	_____	_____

14. Flow, Integrating Meters:

Quantity, total: _____

a. Service	_____	_____	_____	_____
b. Quantity	_____	_____	_____	_____
c. Manufacturer	_____	_____	_____	_____
d. Model No.	_____	_____	_____	_____
e. Type	_____	_____	_____	_____

15. Pressure Indicators:

Quantity, total: _____

a. Service	_____	_____	_____	_____
b. Quantity	_____	_____	_____	_____
c. Manufacturer	_____	_____	_____	_____
d. Model No.	_____	_____	_____	_____
e. Type	_____	_____	_____	_____

ATTACHMENT 3
(Continued)

16. Alarm Annunciator:

    a. Manufacturer _____

    b. Type _____

    c. Number of Points used; total _____ ; _____

17. Timers:

    a. Quantity, total _____

    b. Manufacturer _____

    c. Model No. _____

18. Relays:

    a. Quantity, approx. _____

    b. Manufacturer _____

    c. Model No. _____

19. Program Controllers:

    a. Quantity, total _____

    b. Manufacturer _____

    c. Model No. _____

20. Cost of Neutralizing Regenerant Wastes:

    a. Excess acid kg (lb) 100% H_2SO_4 _____

    b. Excess caustic kg (lb) 100% NaOH _____

    c. Amount of acid or caustic needed to neutralize excess Kg (lb) 100% _____ _____

    d. Cost of neutralizing chemicals, @ _____ $/1000 m^3 $ _____

SPECIFICATION EXCEPTIONS

CYCLE MAKE UP DEMINERALIZER SYSTEM

The bidder certifies that the bid is complete and in absolute agreement with the requirements of this Specification, except as specifically stated below. (Use additional sheets if required).

_____
(BIDDER'S NAME)

_____
(MANUFACTURER'S NAME)

_____
(QUOTATION NUMBER)

Attest: _____
(SIGNATURE)

_____
(TITLE)

ATTACHMENT 4

ACOUSTIC DATA
SUMMARY SHEET

Octave Band Geometric Mean Frequency (Hertz)	Equipment Without Acoustic Treatment or Guarantee	Equipment With Maximum Sound Level Guarantee of 90 dBA at 1 Meter (3 feet)
63	_____	_____
125	_____	_____
250	_____	_____
500	_____	_____
1000	_____	_____
2000	_____	_____
4000	_____	_____
8000	_____	_____

Kind of levels given, indicate which of the following:

Sound Power Levels re 10 (exp -12) watt	_____	_____
Sound Pressure Levels re 2x10 (exp -4) microbars	_____	_____

If sound pressure levels are given, indicate both of the following:

Weighting network use A, B, C, or Linear (None)	_____	_____
Distance to sound source Feet or Meters	_____	_____

Vendor Comments: _____

_____

_____

_____

283

ATTACHMENT 5

WATER ANALYSIS

Temp		18-28°C	
pH	_____	8-9	
Alkalinity as $CaCO_3$	_____	66	mg/l
Hardness as $CaCO_3$	_____	82	mg/l
Silica	_____	5	mg/l
Sulphate	_____	100	mg/l
Chloride	_____	55	mg/l
Suspended Solids	_____	1 to 5	mg/l
Iron	_____	<1	mg/l

LAKHRA POWER FEASIBILITY STUDY

SPECIFICATION M-12A

WASTEWATER TREATMENT EQUIPMENT

B1853/G#74

SPECIFICATION M-12A
FOR
WASTEWATER TREATMENT EQUIPMENT

TABLE OF CONTENTS

		Page
1.0	DESCRIPTION OF WORK	1
2.0	WORK INCLUDED	1
3.0	WORK NOT INCLUDED	1
4.0	APPLICABLE CODES, STANDARDS AND REGULATORY REQUIREMENTS	1
5.0	SUPPLEMENTAL DATA	2
6.0	VENDOR DATA	2
7.0	DESIGN REQUIREMENTS	3
8.0	PERFORMANCE REQUIREMENTS	4
9.0	MATERIAL REQUIREMENTS	4
10.0	FABRICATION AND ASSEMBLY REQUIREMENTS	7
11.0	INSTALLATION REQUIREMENTS (NONE)	7
12.0	PERSONNEL REQUIREMENTS	7
13.0	INSPECTIONS AND TESTS	7
14.0	CLEANING, CORROSION PROTECTION AND COATING	7
15.0	MARKING AND IDENTIFICATION	7
16.0	PACKAGING, SHIPPING AND STORAGE	8
17.0	ACCEPTANCE CRITERIA	9

ATTACHMENTS

1. Motor Specification
2. Motor Data Sheet
3. Specification Summary Data Sheets - 4 pages
4. Acoustic Data Sheet - 1 page

LAKHRA POWER FEASIBILITY STUDY
TECHNICAL SPECIFICATION M-12A
WASTEWATER TREATMENT

1.0 DESCRIPTION OF WORK

Work to be performed consists of designing, fabricating, testing and delivering wastewater treatment equipment. The wastewater treatment equipment is to be used at two 350 MW coal-fired power plants for the Water & Power Development Authority of Pakistan (WAPDA).

2.0 WORK INCLUDED

The scope of work shall include the supply of a pH control-neutralization system with two metering pumps, caustic and acid day tanks and controls. All items are to be skid-mounted for installation by others. The scope includes all equipment, materials and other services including the sample system controls, motor starters with spare parts, special tools, operation and maintainance manuals, detailed drawings and installation data. Data sheets in Attachment 3 shall be filled out.

3.0 WORK NOT INCLUDED

The following are not included and will be provided by others:

a. Neutralization tank.

b. Personnel protection showers.

c. Field installation labor.

d. Piping to and from the neutralization skid.

e. Mounting of instruments on remote panels or interconnecting wiring to remote panels.

f. Containment area.

4.0 APPLICABLE CODES, STANDARDS, AND REGULATORY REQUIREMENTS

4.1 All materials shall be in accordance with ASTM specifications. Any exceptions will be subject to approval of the Buyer.

4.2 All pressure piping shall be in accordance with ANSI B31.1 "Power Piping."

4.3 The pumps shall be furnished in accordance with the latest Hydraulic Institute Standards.

4.4 ANSI S1.2, "Methods for the Physical Measurement of Sound."

287

4.5 National Electrical Manufacturer's Association (NEMA).

4.6 Application of codes and standards referenced herein requires the application of the latest issue date and of all addenda adopted as of the date of the purchase order. Later revisions may be involved only by mutual agreement between Purchaser and Vendor.

5.0 SUPPLEMENTAL DATA

The documents listed on the contents page as attachments are applicable to the work to the extent specified herein.

6.0 VENDOR DATA

6.1 Vendor data shall be furnished in accordance with the requirements indicated on the attached Vendor Data Requirements and Submittal Schedule (later).

6.2 Vendor shall furnish Certified Vendor Drawings, and include a list of drawings by category, such as general arrangement, foundation data, and electrical connection. If titles of the Certified Vendor Drawings are unknown, bidder shall submit the estimated number of drawings he will submit in each category.

6.3 The Vendor shall provide (No. later) copies of an instruction book covering all equipment being furnished. The instruction book shall have hard front and back covers and have proper identification on the front cover as to contents.

6.4 Instruction books are not considered design manuals, and if any discrepancies arise between the Vendor's drawings and instruction books, or items omitted from the drawings which are contained in the instruction book recommendations, the Vendor shall amend the instruction books or shall modify the installation at his own expense, whichever is deemed by the Owner as giving the most proper and operative final installation.

6.5 Performance Test Reports and Certifications

The following performance reports and certifications shall be submitted to the Owner prior to acceptance of the Work:

a. Certified copies of all shop test data shall be forwarded to the Engineer for later distribution to the Owner.

b. The Vendor shall furnish procedures and instructions for all field installation and all required start-up tests and instruction books for the equipment being furnished.

6.6 Special Tools and Spare Parts

6.6.1 The Vendor shall supply the following:

One set of any special tools required to operate and maintain his equipment. All tools shall be identified by name and number, and this number shall appear on drawings and instructions to indicate the application of the tools furnished and to permit the ordering of replacement tools.

6.6.2 The Vendor shall supply, with his proposal, pricing for 1- and 5-year supplies of spare parts.

7.0 DESIGN REQUIREMENTS

7.1 Wastewater pH adjustment and neutralization skid will be used to adjust the pH of the boiler cleaning solutions. A 1200 m^3 (317,000 gallon) tank will be used to store the cleaning solutions. Sulfuric acid and caustic soda will be added as required based on the pH of the tank which may vary from 0 to 14. The system shall consist of:

7.2 One acid feed tank (93 percent acid) and metering pump.

7.3 One caustic soda feed tank (50 percent caustic) and metering pump.

7.4 One pH indicating controller and pH sensor.

7.5 One level probe and level alarm. Level probe mounting on the 1200 m^3 (317,000 gallons) tank by others.

7.6 One recirculation and agitation pump to circulate tank contents at a minimum rate of 120 l/s (1800 gpm) at a pressure of 300 kPa (43.5 psig).

7.7 Two mixing tees for feeding caustic soda and acid to the recirculation loop.

7.8 One automatic control system with graphics, indicating lights, pushbuttons and alarms to make an operating system.

All instruments shall be labelled for identification. Provide all motors, starters, controls, plates, pipework, fittings and supporting steel work.

Chemical tanks shall be minimum of 4 m^3 (1,000 gallons) capacity and metering pumps shall be made of suitable materials and sized for delivery of 0-5 kg/hr, (0-11 lb/hr) of reagents at 800 kPa (116 psi) pressure.

7.9 ACOUSTIC REQUIREMENTS

7.9.1 The Vendor shall submit as part of his proposal a tabulation of octave band sound power levels in accordance with 7.9.3 below for the equipment being quoted without acoustic treatment or guarantee. The proposal shall be considered incomplete without this information.

7.9.2 The Vendor shall submit as part of his proposal an additional price for a guaranteed maximum sound level of 90 dbA (90 decibels, a network weighted) when measured with a Type I precision sound level meter at slow response and at a distance of 1 meter (3 feet) in any direction from the nearest surface of the equipment. The Vendor shall also submit with his proposal a tabulation of octave band sound power levels in accordance with 7.9.3 below for the equipment in the sound attenuated condition.

7.9.3 The Vendor shall complete and submit as part of his proposal the attached Acoustic Data Summary Sheet (Attachment 4). It is preferred that the octave band levels be sound power levels in decibels with a reference power of 10 (exponent 12) watt. However, sound pressure levels in decibels with a reference pressure of 0.0002 microbars will be acceptable providing the weighting network and distance to the sound source are indicated. In the event acoustic data for the equipment quoted is not available, acoustic data for similar equipment will be acceptable. However, the equipment differences should be indicated and the Vendor's estimate of the acoustical effect of these differences should be indicated.

8.0 PERFORMANCE REQUIREMENTS

The system, when installed and functioning, shall meet the design conditions.

9.0 MATERIAL REQUIREMENTS

9.1 VALVES AND PIPING

a. Piping shall be in accordance with the requirements of ANSI B31.1 and welding shall conform to Section IX of the ASME Code.

b. The VENDOR shall supply all valves and piping of proper size and design to minimize head losses and provide good control for all operations of the coagulator chemical feeders, filters and backwash. The VENDOR shall also supply necessary solenoid valves, orifices and similar items associated with controls.

c. The routing of all piping to be supplied under this Specification, including field-fabricated piping, if any, shall be shown in detail on piping arrangement drawings to be prepared by the VENDOR. The VENDOR shall have the Engineer's approval

of piping arrangement drawings before shop fabrication or shipment of loose material for field fabrication is started.

d. Pipe shall be seamless carbon steel, SA-106, Grade B, schedules as follows:

   1. 50 mm (2 inches) or less - Schedule 80.

   2. 65-250 mm (2 1/2 to 10 inches) - Schedule 40.

e. Unless otherwise specified herein, all fittings 65 mm (2-1/2 inches) and larger shall be of the butt-welding type and all fittings 50 mm (2 inches) and smaller shall be of the socket-welding type. Butt-welding fittings shall conform to ANSI B16.9 and shall be constructed in accordance with ASTM A 234, Grade WPB. Socket-welding fittings shall confrom to ANSI B16.11 and shall be constructed in accordance with ASTM A 105, Grade II.

f. Carbon steel flanges shall be of the welding-neck type and shall confrom to ANSI B16.5 with material in accordance with ASTM A 105. Flanges which mate with flat-faced valves or equipment flanges shall be flat faced.

g. Flange bolting shall conform to the applicable provisions of ANSI B16.5 and shall be commercial type. Bolts shall be the hexagonal head type in accordance with ANSI B18.2.1, threaded on one end, and furnished with one hexagonal nut for each bolt in accordance with ANSI B18.2.2. Threading shall be in accordance with ANSI B1.1, coarse thread series, Class 2A fit for bolts and Class 2B fit for nuts. The materials shall conform to the specifications as follows:

   1. Bolts - ASTM A 193.

   2. Nuts - ASTM A 194.

h. All valves shall be provided with handwheels. All solenoid valves shall be provided with manual overrides. All handwheels shall be marked clearly to indicate rotation to "open" or "close."

i. Control valves shall be Fisher or Engineer-approved equivalent, fitted with overriding handwheel for manual operation in the event of failure of the operating medium. All control valves shall be fitted with valve postion indicators.

j. The design of all valve bodies shall conform to the requirements of ANSI B16.5, B16.9 and B16.11, as applicable for dimensions, material thickness and material specifications, in their respective pressure class.

k. PVC or alloy piping will be used for dilute acid and dilute caustic service.

l. PVC valves shall be Hills-McCanna "McCannaplast" ball type or Engineer-approved equivalent.

9.2 The pumps shall be Milton Roy or Engineer-approved equivalent and shall be manually adjustable from 0 to 100 percent of capacity. Each pump shall have a built-in, externally adjustable relief valve. Each pump shall be the hydraulically balanced, flexible diaphragm type, with double ball-check valves. All internal moving parts of the pumps shall run submerged in lubricating oil.

9.3 CONTROL PANEL

9.3.1 A grid-mounted NEMA Type 12 enclosure shall be provided for the control equipment required for operation of the system. All indicating equipment (indicators, lights, recorders, integrators and timers) shall be installed within the enclosure so as to be visible on the front panel. Pushbuttons and selector switches shall be mounted in the enclosure so as to be operable at the front panel and shall be located no less than .6 m (2 feet) nor more than 1.8 m (6 feet) above the floor. Devices mounted in the enclosure shall include at least the following:

9.3.1.1 Lights to indicate motor operations.

9.3.1.2 Level indicator for treatment tank.

9.3.1.3 Level indicator for storage tanks.

9.3.1.4 Lights to indicate valves in "open" or "closed" position.

9.3.1.5 Lights to indicate timers running.

9.3.1.6 Pushbutton stations or selector switches for pumps.

9.3.2 ANNUNCIATOR

The control panel shall be provided with an annunciator, complete with acknowledge and test pushbuttons. All spare annunciator points shall be wired to terminal boards.

9.3.3 The control panel shall be the front-opening type.

9.3.4 The panel shall not enclose meter lines containing liquids.

9.3.5 All electrically operated cycle timers pertinent to control function shall be supplied flush mounted on the face of the control panel. They shall have indicating lights, automatic reset and indicators showing elapsed time or time remaining in step.

9.3.6 The instruments and solenoids shall be furnished on a shop-fabricated panel. The panel shall be prewired and tubed. The prewired terminal strip shall include terminals for valve limit switches. Solenoids shall have manual override and, if mounted inside the panel, shall have bulkhead fittings on the panel wall.

9.3.7 The pH cells shall be equipped with automatic temperature compensation.

10.0 FABRICATION AND ASSEMBLY REQUIREMENTS

See 9.0 Material Requirements.

11.0 INSTALLATION REQUIREMENTS

None

12.0 PERSONNEL REQUIREMENTS

The Vendor shall include supervision of installation and the start-up engineering services priced separately in his proposal.

13.0 INSPECTIONS AND TESTS

13.1 The Purchaser's Engineer shall at all times have free access to the Vendor's shops and records which shall be kept and made available to the Purchaser's Engineer.

13.2 The Purchaser's Engineer's Inspectors will have the authority to refuse "release for shipment" if all requirements of approval drawings, procedures, specification, purchase documents, and codes or standards have not been fulfilled or if certified copies of required inspection and test reports are not available for review.

14.0 CLEANING, CORROSION PROTECTION AND COATING

14.1 Painting: All ferrous parts shall be free of rust and loose mill scale and shall receive one shop coat of zinc-chromate iron oxide alkyd resin primer. Moving parts shall receive one shop coat of slush oil. Motors and reducers shall be furnished with the manufacturer's standard paint.

14.2 Any stainless steel, nonferrous or galvanized material shall not be painted. The cast iron guides shall remain unpainted.

15.0 MARKING AND IDENTIFICATION

15.1 Each package, skid, box and crate shall be marked on the outside with the following information so that it is readily visible:

a. (OWNER'S name)
(Project identification)

(Address)
(City, state, zip code)

b. Purchase Order number:

c. Weight:

d. Equipment Nos. as applicable:

15.2 Each unit shall be identified with a tag number. The number shall be permanently imprinted with at least 5mm (3/16") high letters on a 22-gage stainless steel tag. The tag shall be attached to the enclosure with pins of a similar material.

15.3 Each unit shall have a permanently secured data plate made from at least 22-gage stainless steel, permanently imprinted with 5mm (3/16") high letters, and containing the following information:

a. Manufacturer's name and address:

b. Model Number:

c. Serial Number:

d. Date of Manufacture:

e. Duty:

f. Weight:

15.4 The data plate shall be located where it is readily visible and shall be securely attached with pins of a material similar to the plate.

15.5 Equipment item numbers shall be utilized by the VENDOR in designating equipment. Numbers so assigned by the VENDOR may be reassigned at the option of the Engineer.

15.6 Items furnished under these specifications, but not identified herein, shall have tags inscribed as directed by the Engineer.

16.0 PACKAGING, SHIPPING AND STORAGE

16.1 All items shall be adequately crated, wrapped or otherwise protected so that shipment and delivery may be made without damage.

16.2 All flanges shall be protected by bolted-on wooden covers and all threaded openings shall be closed with caps or plugs.

16.3 A list and description of the contained material shall be plainly marked on the outside of each shipping container. All individual items shall be tagged.

16.4 Bolts, nuts, fittings and other small parts shall be separately boxed or packaged for shipment and properly tagged and identified.

16.5 Three copies of packing lists and shipping memoranda (special handling requirements, storage instructions, etc.) shall be mailed forty-eight hours before shipment is made. Packing lists shall include Vendor's mark number and Owner's tag number. Copies of shipping papers shall be mailed as follows (later):

16.6 Unless otherwise specified by the Vendor, storage of the equipment shall be outdoors. The Vendor shall inform the Owner of any special storage requirements sufficiently in advance of shipping of the equipment to allow for necessary preparation.

17.0 ACCEPTANCE CRITERIA

The Vendor shall ensure that he has complied with the following requirements before submitting the work for acceptance:

17.1 Submittal of pump performance reports and certified pump curves.

17.2 Submittal of all Vendor data required per Specification Summary Sheets Attachment 3, Acoustic Data Summary Sheet Attachment 4, and Motor Data Sheet Attachment 2.

295

ATTACHMENT 1

Refer to Electrical Motor Specifications E-1 and E-2.

ATTACHMENT 2

Refer to Motor Data Sheets included in Electrical Motor Specifications E-1 and E-2.

ATTACHMENT 3

SPECIFICATION SUMMARY SHEETS
pH CONTROL SYSTEM

Weight of Skid _____ kg (lb)

Dimensions:

Length _____ m (ft)

Width _____ m (ft)

Height _____ m (ft)

No. of Modules _____

ATTACHMENT 3
(Continued)

pH CONTROL SYSTEM
ACID TANK

Working Capacity, Volume _____, m^3 (gallons)

Manufacturer:

Materials _____ Shell _____

_____ Heads _____

Dimensions:

_____ Diameter _____, mm (in.)

_____ Shell Height _____, mm (in.)

_____ Height to Top _____, mm (in.)

_____ Thickness (shell) _____, mm (in.)

_____ Thickness (beads) _____, mm (in.)

Weight/Working _____ kg (lb)

ATTACHMENT 3
(Continued)

pH CONTROL SYSTEM
CAUSTIC TANK

Working Capacity, Volume _____, m^3 (gallons)

Manufacturer:

Materials _____ Shell _____

_____ Heads _____

Dimensions:

_____ Diameter _____, mm (in.)

_____ Shell Height _____, mm (in.)

_____ Height to Top _____, mm (in.)

_____ Thickness (shell) _____, mm (in.)

_____ Thickness (beads) _____, mm (in.)

Weight, Working _____ kg (lb)

ATTACHMENT 3
(Continued)

pH CONTROL SYSTEM
ACID FEED PUMP

Type _____ _____

Number _____

Maximum Output _____ kg/hr (lb/hr)

Range Output _____ kg/hr (lb/hr)

Head at Max. Output _____ kPa (psi)

Speed Control Range _____ strokes/min.

Power at Max. Output _____ kW (hp)

Efficiency at Max. Output _____ %

Materials of Construction

_____

_____

_____

_____

Relief Valve _____ Internal _____ External _____

Type of Valves _____

Material of Valves _____

Drive _____

Seals or Glands _____

ATTACHMENT 3
(Continued)

pH CONTROL SYSTEM
CAUSTIC FEED PUMP

Type _____

Number _____

Maximum Output _____ kg/hr (lb/hr)

Range Output _____ kg/hr (lb/hr)

Head at Max. Output _____ kPa (psi)

Speed Control Range _____ strokes/min.

Power at Max. Output _____ kW (hp)

Efficiency at Max. Output _____ %

Materials of Construction

_____

_____

_____

_____

Relief Valve _____ Internal _____ External _____

Type of Valves _____

Material of Valves _____

Drive _____

Seals or Glands _____

ATTACHMENT 4

ACOUSTIC DATA
SUMMARY SHEET

Octave Band Geometric Mean Frequency (Hertz)	Equipment Without Acoustic Treatment or Guarantee	Equipment With Maximum Sound Level Guarantee of 90 dBA at 1 Meter (3 feet)
63	_____	_____
125	_____	_____
250	_____	_____
500	_____	_____
1000	_____	_____
2000	_____	_____
4000	_____	_____
8000	_____	_____

Kind of levels given, indicate which of the following:

Sound Power Levels, re 10 (exp -12) watt	_____	_____
Sound Pressure Levels re 2x10 (exp -4) microbars	_____	_____

If sound pressure levels are given, indicate both of the following:

Weighting network use A, B, C, or Linear (None)	_____	_____
Distance to sound source Feet or Meters	_____	_____

Vendor Comments: _____

_____

_____

_____

LAKHRA POWER FEASIBILITY STUDY

SPECIFICATION M-12B

SANITARY WASTEWATER TREATMENT SYSTEM

SPECIFICATION M-12B
SANITARY WASTEWATER TREATMENT SYSTEM
TABLE OF CONTENTS

Article	Title	Page
1.0	DESCRIPTION OF WORK	1
2.0	WORK INCLUDED	1
3.0	WORK NOT INCLUDED	2
4.0	APPLICABLE CODES AND STANDARDS	2
5.0	SUPPLEMENTAL DATA	2
6.0	VENDOR DATA	2
7.0	DESIGN REQUIREMENTS	3
8.0	PERFORMANCE REQUIREMENTS	7
9.0	MATERIAL REQUIREMENTS	7
10.0	FABRICATION AND ASSEMBLY REQUIREMENTS	8
11.0	INSTALLATION REQUIREMENTS - NONE	8
12.0	PERSONNEL REQUIREMENTS	8
13.0	INSPECTIONS AND TESTS	8
14.0	CLEANING, CORROSION PROTECTION, AND COATING	9
15.0	MARKING AND IDENTIFICATION	9
16.0	PACKAGING, SHIPPING, AND STORAGE	10
17.0	ACCEPTANCE CRITERIA	10

ATTACHMENTS

1. Design Data Sheet - 1 page
2. Motor Specification
3. Motor Data Sheet
4. Specification Summary Data Sheets - 4 pages
5. Acoustic Data Sheet - 1 page

LAKHRA POWER FEASIBILITY STUDY
TECHNICAL SPECIFICATION M-12B
SANITARY WASTEWATER TREATMENT SYSTEM

1.0 DESCRIPTION OF WORK

The work to be performed consists of designing, fabricating, and delivering to the jobsite one package-type activated sludge treatment plant. The plant shall consist of aeration compartment, clarifier, air diffusers, effluent trough, scum baffle, mechanical skimmer, clarifier sludge collection mechanism, sludge airlifts, and access bridges and walkways, access stairway and all internal piping. The structures shall be built to withstand the hydrostatic pressures encountered in operation. The plant shall treat the sanitary wastewater from two 350 MW power plants for the Water and Power Development Authority of Pakistan (WAPDA) and the associated worker's colony of about 2500 homes with five persons per house.

2.0 WORK INCLUDED

The following components and accessories will be provided as part of this specification:

2.1 One complete activated sludge plant to treat approximately 3786 M^3/d (1,000,000 gpd) of raw domestic wastewater. The activated sludge plant shall include at least the following units.

2.2 An inlet chamber and bar screen.

2.3 A wastewater solids comminutor.

2.4 Aeration tank.

2.5 Foam control system.

2.6 Air diffusion equipment.

2.7 Air blowers.

2.8 Clarifier and clarifier mechanism.

2.9 Air lifts for settled sludge.

2.10 Sludge digester.

2.11 Chlorine contact chamber.

2.12 Chlorination equipment.

2.13 Raw sanitary waste pump station.

2.14 Control panel.

3.0 WORK NOT INCLUDED

3.1 All field erection and painting.

3.2 Anchor bolts but plant manufacturer to furnish location diagrams for anchor holds.

3.3 All external wiring and conduit.

3.4 Remote alarms, water supply, wiring and piping beyond the furnished equipment.

3.5 All excavation, backfilling and grading.

3.6 Sludge drying beds.

3.7 Field painting.

3.8 Concrete slab, foundations and base keyway, placing of concrete and groundwork.

4.0 APPLICABLE CODES, STANDARDS, AND REGULATORY REQUIREMENTS

4.1 All materials shall be in accordance with ASTM specifications. Any exceptions will be subject to approval of the Buyer.

4.2 All pressure piping shall be in accordance with ANSI B31.1 "Power Piping."

4.3 The pumps shall be furnished in accordance with the latest Hydraulic Institute Standards.

4.4 ANSI S1.2, "Methods for the Physical Measurement of Sound."

4.5 National Electrical Manufacturer's Association (NEMA).

4.6 Application of codes and standards referenced herein requires the application of the latest issue date and of all addenda adopted as of the date of the purchase order. Later revisions may be involved only by mutual agreement between Purchaser and Vendor.

5.0 SUPPLEMENTAL DATA

The documents listed on the contents page as attachments are applicable to the work to the extent specified herein.

6.0 VENDOR DATA

6.1 Vendor data shall be furnished in accordance with the requirements indicated on the attached Vendor Data Requirements and Submittal Schedule (later).

6.2 Vendor shall furnish Certified Vendor Drawings, and include a list of drawings by category, such as general arrangement, foundation

data, and electrical connection. If titles of the Certified Vendor Drawings are unknown, bidder shall submit the estimated number of drawings he will submit in each category.

6.3 The Vendor shall provide (No. later) copies of an instruction book covering all equipment being furnished. The instruction book shall have hard front and back covers and have proper identification on the front cover as to contents.

6.4 Instruction books are not considered design manuals, and if any discrepancies arise between the Vendor's drawings and instruction books, or items omitted from the drawings which are contained in the instruction book recommendations, the Vendor shall amend the instruction books or shall modify the installation at his own expense, whichever is deemed by the Owner as giving the most proper and operative final installation.

6.5 PERFORMANCE TEST REPORTS AND CERTIFICATIONS

The following performance reports and certifications shall be submitted to the Owner prior to acceptance of the Work:

a. Certified copies of all shop test data shall be forwarded to the Engineer for later distribution to the Owner.

b. The Vendor shall furnish procedures and instructions for all field installation and all required start-up tests and instruction books for the equipment being furnished.

6.6 SPECIAL TOOLS AND SPARE PARTS

6.6.1 The Vendor shall supply the following:

One set of any special tools required to operate and maintain his equipment. All tools shall be identified by name and number, and this number shall appear on drawings and instructions to indicate the application of the tools furnished and to permit the ordering of replacement tools.

6.6.2 The Vendor shall supply, with his proposal, pricing for 1- and 5-year supplies of spare parts.

7.0 DESIGN REQUIREMENTS

7.1 The foundation slab of this plant may be below grade after completion of the project. Vendor shall furnish structural reinforcement to resist external hydrostatic loads and earth pressures when the plant units are completely dewatered.

7.2 The partition walls which separate the plant units shall be reinforced to allow dewatering of the individual cells and the walls shall withstand full hydrostatic pressure of the next cell being full.

7.3 The plant and its various components, electrical and instrumentation, in general all furnished equipment, shall be suitable for the ambient environment and conditions.

7.4 The inlet bar screen shall be fabricated of 6mm x 50mm (1/4" x 2") steel bars. The screen shall be designed for maximum ease of cleaning.

7.5 Comminutors shall be of rotating drum type with slots and shall be designed to cut and shred wastewater solids without removing the solids.

7.6 The aeration tank shall be designed to permit flexibility of operation in any of the activated sludge modes: contact stablization, complete mix, step aeration and conventional.

7.7 A water spray system shall be provided for control of foam or froth in the aeration tanks. The spray system shall consist of properly spaced nozzles mounted on a water pipe header receiving water from a centrifugal pump mounted on a bracket in the final settling tank. The pump shall take suction from the upper section of the final settling tank. The nozzles shall be of aluminum or brass construction. Spray nozzles shall produce a sharp spray pattern. A hose bib shall be furnished between the discharge side of the pump and spray nozzle shutoff valve to provide wash-up water when required. The pump shall be sized by the Vendor.

7.8 Sufficient individual air diffuser assemblies shall be provided. Diffuser assemblies shall allow regulation of air and quick removal. Air piping and diffuser assemblies shall be designed to minimize clogging. The air diffusion shall ensure proper mixing and diffusion of air with no stagnant pockets or zones and will maintain the solids in suspension.

Tanks shall be filleted as required to prevent sludge accumulation and at the top to enhance rotation of tank contents and prevent scum and froth accumulation.

Minimum dissolved oxygen (D.O.) level of 2 mg/l will be maintained in the aeration tank.

7.9 The air requirements shall be supplied by at least two positive displacement blowers each of sufficient size to provide air requirements for aeration tanks, digesters, airlifts and other plant uses.

7.10 Clarifier shall be of all welded steel construction. A complete sludge collector mechanism, support bridge, continuous scum baffle, mechanical skimming system/peripheral effluent trough with adjustable fiberglass reinforced plastic (FRP) or stainless steel weir plates shall be furnished.

7.11 A steel inlet pipe extending from the aeration tank to the center inlet well shall be furnished.

7.12 The sludge collector mechanism shall be complete with center inlet well, drive assembly, drive shaft and adjustable raise mechanism.

7.13 A heavy duty double reduction worm gear motor shall be connected to and drive the sludge collector shaft by means of an adequately sized roller chain. The drive motor shall be bolted directly to the gear box. An electric torque sensor shall protect the drive train from overload by sensing drive torque and shutting off the drive motor should it become overloaded.

7.14 Settled sludge shall be returned from the clarifier to either aeration tank or the digester. Skimmings shall be piped to the digester.

Sludge digestion tank shall be of adequate capacity to aerobically digest the secondary sludge. A diffused aeration system similar in design to the aeration tank shall be furnished. Contents of the tank shall be well agitated. Minimum of 0.14 M_3/sec (30 scfm) / 28.2 M^3 (1000 c. ft.) of air shall be provided. Digester shall be periodically decanted and supernatant will be returned to the aeration basin while the sludge will be transferred to a drying lagoon to be built by others.

7.15 A chlorine contact chamber will be provided to mix chlorine solution and clarified effluent. Chlorine contact chamber shall provide minimum of 30 minutes detention time at peak flow and will do same without stratification. Sufficient baffling will be provided to provide adequate agitation. Chlorine contact tank should be capable of being bypassed and dewatered.

7.16 A factory built raw sewage lift station and valve pit shall be furnished. The principal items of equipment include two submersible pumps, valves, piping, control panel, and wiring.

Two totally submersible raw sewage pumps with solids handling capacity of 80 mm (3") diameter shall be furnished. Each pump shall be equipped with standard impeller, 1000 rpm, 380 volt, 3 phase, 50 Hz motor of sufficient horsepower so that the motor is not overloaded at any point on the pump curve.

7.17 The design shall be such that the pumping units will be automatically connected to the discharge piping when lowered into place on the discharge connection. The pumps shall be easily removable for inspection or service, requiring no bolts, nuts or other fastenings to be removed for this purpose, and no need for personnel to enter the wet well. Each pump shall be fitted with a galvanized chain of adequate strength and length to permit raising the pump for inspection and removal. The pump construction shall be the manufacturer's standard design for raw sewage which has received no prior pretreatment.

The Vendor shall furnish upper guide bar brackets, safety chain hooks, cable holder, intermediate guide bar brackets if required, and the necessary anchor bolts.

7.18 The Vendor shall furnish the required number of non-floating, displacement type liquid level sensors, contacts, timers, etc., to perform the following intended pump operation: There shall be provisions for audio alarms for the following pump operating conditions: low level cutoff, high level and low level. The pumps shall alternate in operation. Each pump shall have a 24 hour timer which will enable the operator to have the pump turn on automatically at any desired time of day regardless of level in the wet well. The pump shall then operate until the low level cutoff turns the pump off. If the timer turns the pump on when the wet well level is below the low level cutoff, the low level cutoff will override the timer and pump will not turn on. Contacts shall be provided so that at the pump shutoff, the solenoid valve on the flushing water line will open to permit flushing water to enter the pump discharge line. An adjustable timer (0 to 60 minutes) shall then close this solenoid valve after the elapsed set time.

7.19 ACOUSTIC REQUIREMENTS

7.19.1 The Vendor shall submit as part of his proposal a tabulation of octave band sound power levels in accordance with 7.19.3 below for the equipment being quoted without acoustic treatment or guarantee. The proposal shall be considered incomplete without this information.

7.19.2 The Vendor shall submit as part of his proposal an additional price for a guaranteed maximum sound level of 90 bA (90 decibels, a network weighted) when measured with a Type I precision sound level meter at slow response and at a distance of 1 meter (3 feet) in any direction from the nearest surface of the equipment. The Vendor shall also submit with his proposal a tabulation of octave band sound power levels in accordance with 7.19.3 below for the equipment in the sound attenuated condition.

7.19.3 The Vendor shall complete and submit as part of his proposal the attached Acoustic Data Summary Sheet (Attachment 5). It is preferred that the octave band levels be sound power levels in decibels with a reference power of 10 (exponent 12) watt. However, sound pressure levels in decibels with a reference pressure of 0.0002 microbars will be acceptable providing the weighting network and distance to the sound source are indicated. In the event acoustic data for the equipment quoted is not available, acoustic data for similar equipment will be acceptable. However, the equipment differences should be indicated and the Vendor's estimate of the acoustical effect of these differences should be indicated.

8.0 PERFORMANCE REQUIREMENTS

The plant, when installed and functioning, shall meet the design conditions stated in Attachment 1.

9.0 MATERIAL REQUIREMENTS

9.1 All steel tanks shall be fabricated from minimum of 6mm (1/4") thick structural grade steel plate and structural slopes used for reinforcing shall have a minimum thickness of 6mm (1/4") at the thinnest section.

9.2 Screen shall be fabricated of 6mm x 40mm (1/4" x 1-1/2") steel.

9.3 Handrails shall be 40mm (1-1/2") galvanized pipe.

9.4 Walkways shall be of galvanized steel grating. Walkways shall be minimum 1m (3'-0") wide.

9.5 Scum baffles shall be of FRP, 3M (12") wide and extend 75mm (3") above static water level.

9.6 Air piping shall be Sch. 40 steel pipe of galvanized malleable iron fitting and shall be sized for at least 200% of air requirements.

9.7 Ductile iron pipe within the lift station and valve pit shall be flanged joint cement lined, coated inside and out with approved bitumastic or coal tar enamel. Pipe shall receive factory prime coat.

9.8 The pipe and fittings shall conform to ANSI A21.51 and ANSI A21.10 respectively. Copper pipe within the valve pit shall be Type L, hard drawn. Fittings shall be cast bronze, solder-type.

9.9 Flanged Coupling Adaptor (FA1): Dresser Style 128, tied per manufacturer's recommendations; or equal.

9.9.1 Check valve (CK1): Clow, F-5382; or equal.

9.9.2 Plug Valve (PL1): DeZurik, Series 100 (lever operated); or equal.

9.9.3 Backflow Preventer with isolation gate valves (BP1): Beeco, Model 6-C; or equal.

9.9.4 Gate valve (GAI): Nibco, Figure # S-111 or T-111; or equal.

9.9.5 Globe valve (GLI): Crane (Plug Type Disc); or equal.

9.10 Pressure Gauge (PGI): Ashcroft, Figure # 1079 115mm (4 1/2") dial, 0 to 60 psi; or equal.

9.11 Solenoid valve (SOI): Automatic Switch Company, Model 8210; or equal.

9.12 Air Release Valve (ARI): APCo, No. 75, with shutoff valve; or equal.

9.13 All tar coated piping shall receive two coats of a suitable primer/sealer prior to finish color painting to prevent discoloration of finish coats by "bleeding." Primer/sealer shall be two coats Koppers Inertol Tarstop, .03 dry mm (1.2 mils) per coat; or equal.

9.14 Ferrous piping and equipment in the lift station wet well shall receive two finish coats of Kopper's Bisumastic 300-M, .2 dry mm (8.0 mils) per coat; or equal.

9.15 Ferrous piping and valves shall receive one finish coat of Koppers Pug Primer .05 dry mm (2.1 mils) and two finish coats.

10.0 FABRICATION AND ASSEMBLY REQUIREMENTS

See 9.0, Material Requirements.

11.0 INSTALLATION REQUIREMENTS

None

12.0 PERSONNEL REQUIREMENTS

The Vendor shall include supervision of installation and the start-up engineering services priced separately in his proposal.

13.0 INSPECTIONS AND TESTS

13.1 The Purchaser's Engineer shall at all times have free access to the Vendor's shops and rcords which shall be kept and made available to the Purchaser's Engineer.

13.2 The Purchaser's Engineer's Inspectors will have the authority to refuse "release for shipment" if all requirements of approval drawings, procedures, specification, purchase documents, and codes or standards have not been fulfilled or if certified copies of required inspection and test reports are not available for review.

13.3 Acoustic Tests

13.3.1 The maximum sound power or sound pressure levels will be verified by measurements at the installation site at the Purchaser's discretion. The Purchaser's Engineer will perform these requested tests in accordance with standard test procedures as applicable to the particular installation or type of equipment.

13.3.2 Where no specific testing procedure is applicable, verification tests shall be conducted in accordance with the following:

13.3.2.1 Institute of Electrical and Electronics Engineers (IEEE) Standard 85, "IEE Test Procedure for Airborne Sound Measurements on Rotating Electric Machinery."

13.3.2.2 American National Standards Institute (ANSI) S1.2, "Method for the Physical Measurement of Sound".

14.0 CLEANING, CORROSION PROTECTION, AND COATING

14.1 Painting: All ferrous parts shall be free of rust and loose mill scale and shall receive one shop coat of zinc-chromate iron oxide alkyd resin primer. Moving parts shall receive one shop coat of slush oil. Motors and reducers shall be furnished with the manufacturer's standard paint.

14.2 Any stainless steel, nonferrous or galvanized material shall not be painted.

15.0 MARKING AND IDENTIFICATION

15.1 Each package, skid, box and crate shall be marked on the outside with the following information so that it is readily visible:

a. (OWNER'S name)
(Project identification)
(Address)
(City, state, zip code)

b. Purchase Order number:

c. Weight:

d. Equipment Nos. as applicable:

15.2 Each unit shall be identified with a tag number. The number shall be permanently imprinted with at least 5mm (3/16") high letters on a 22-gage stainless steel tag. The tag shall be attached to the enlosure with pins of a similar material.

15.3 Each unit shall have a permanently secured data plate made from at least 22-gage stainless steel, permanently imprinted with 5mm (3/16") high letters, and containing the following information:

a. Manufacturer's name and addres:

b. Model Number:

c. Serial Number:

d. Date of Manufacture:

e. Duty:

f. Weight:

15.4 The data plate shall be located where it is readily visible and shall be securely attached with pins of a material similar to the plate.

15.5 Equipment item numbers shall be utilized by the VENDOR in designating equipment. Numbers so assigned by the VENDOR may be reassigned at the option of the Engineer.

15.6 Items furnished under these specifications, but not identified herein, shall have tags inscribed as directed by the Engineer.

16.0 PACKAGING, SHIPPING AND STORAGE

16.1 All items shall be adequately crated, wrapped or otherwise protected so that shipment and delivery may be made without damage.

16.2 All flanges shall be protected by bolted-on wooden covers and all threaded openings shall be closed with caps or plugs.

16.3 A list and description of the contained material shall be plainly marked on the outside of each shipping container. All individual items shall be tagged.

16.4 Bolts, nuts, fittings and other small parts shall be separately boxed or packaged for shipment and properly tagged and identified.

16.5 Three copies of packing lists and shipping memoranda (special handling requirements, storage instructions, etc.) shall be mailed 48 hours before shipment is made. Packing lists shall include Vendor's mark number and Owner's tag number. Copies of shipping papers shall be mailed as follows (later):

16.6 Unless otherwise specified by the Vendor, storage of the equipment shall be outdoors. The Vendor shall inform the Owner of any special storage requirements sufficiently in advance of shipping of the equipment to allow for necessary preparation.

17.0 ACCEPTANCE CRITERIA

The Vendor shall ensure that he has complied with the following requirements before submitting the work for acceptance:

17.1 Submittal of pump performance reports and certified pump curves.

17.2 Submittal of all Vendor data required per Specification Summary Sheets 1-4 Attachment 4, Acoustic Data Summary Sheet Attachment 5, and Motor Data Sheet Attachment 3.

ATTACHMENT 1

SANITARY WASTEWATER TREATMENT PLANT

DESIGN DATA

Population Equivalent	12,500
Design Average Flow	3786 m^3/day (1,000,000 GPD)
Design Maximum Flow	9465 m^3/day (2,500,000 GPD)
Peak Hour Flow	11,358 m^3/day (3,000,000 GPD)
Influent BoD_5, conc.	200 mg/l
Influent TSS, conc.	220 mg/l

EFFLUENT REQUIREMENTS

BOD_5	30 mg/l
TSS	30mg/l
Chlorine Residual	0.5 mg/l
Fecal Coliform	200/100 ml

DESIGN DATA

Velocity through Screen,	.3048 m/s (1 Fps)
Detention in Aeration Tanks, min.	7.5 hours
Design Loading, max.	.481Kg/m^3 (30 lb/1000 c.ft.)
Sludge Return Capacity	200%
Clarifier Rise Rate Avg. Flow	28.44 m^3/m^2.d (600 gpd/ft^2)
Freeboard, all tanks, min.	45.7 cm (18")
Min. Air for Aeration Tanks	125 m^3/Kg of BOD_5 (2000 c.ft/lb of BOD_5)

ATTACHMENT 2

Refer to Electrical Motor Specifications E-1 and E-2.

ATTACHMENT 3

Refer to Motor Data Sheets included in Electrical Motor Specifications E-1 and E-2.

ATTACHMENT 4

SANITARY WASTEWATER TREATMENT PLANT

SUMMARY SHEETS

Vendor _____

Proposal No. _____

Proposal Date _____

Location _____ _____

Comminutor

Manufacturer _____

Model _____

kW (Hp) _____

Capacity _____

Electrical Requirements _____ V; _____ phase; _____ Hz

Aeration Tank

Volume m^3 (ft^3) _____

Length M (ft.) _____

Water Depth M (ft.) _____

Freeboard cm (in.) _____

Final Settling Tank

Volume m^3 (ft^3) _____

Water Depth m (ft) _____

Freeboard cm (in) _____

Surface Settling Rate $m^3/m^2.d$ (GPD/ft^2) _____

Weir Loading $m^3/d.m$ (GPD/ft) _____

ATTACHMENT 4 (Continued)

Blowers

Aeration Tank
Air m^3/s (SCFM) _____

Waste Sludge Tank
Air m^3/s (SCFM) _____

Air Lifts m^3/s (SCFM) _____

Total Air m^3/s (SCFM) _____

Pressure kPa (psig) _____

Blower Manufacturer _____

Model _____

Speed (RPM) _____

Motor Manufacturer _____

Speed (RPM) _____

kW (Hp) _____

Volts _____

*Surge Tank Blower kW (Hp) _____

Chlorine Contact Tank

Volume m^3 (ft^3) _____

Length m (ft) _____

Water Depth m (ft) _____

Freeboard mm (in.) _____

Effluent Pipe Diameter mm (in) _____

Effluent Pipe Invert m (ft) _____

Digester

Volume m^3 (ft^3) _____

Size _____

Water depth m (ft) _____

Freeboard mm (in) _____

ATTACHMENT 4 (Continued)

Aeration

Total No. of Diffuser Assemblies _____

No. of Diffuser Assemblies Aeration Tank _____

No. of Diffuser Assemblies Digester _____

Type of Diffusers _____

Capacity Each _____

ATTACHMENT 4 (Continued)

DATA SHEET - SEWAGE LIFT STATION

By: _____ Date: _____

Pumps

Manufacturer _____

Model _____

kW (Hp) _____

Capacity _____ l/s (gpm) at _____ m (feet) TDH

Electrical Requirements _____

Motor rpm _____

Pump Construction _____

_____

_____

_____

_____

_____

Pump Control Center Enclosure NEMA Rating _____

Liquid Level Sensor Type _____

Pump Control Description _____

_____

_____

_____

_____

_____

_____

_____

B1902/G#77

ATTACHMENT 4 (Continued)

Valves Manufacturer and Model Number

Flanged Coupling Adaptor _____

Check Valve _____

Plug Valve _____

Backflow Preventer _____

Gate Valve _____

Globe Valve _____

Pressure Gauge _____

Solenoid Valve _____

Air Release Valve _____

Paint Manufacturers and Model Numbers

Piping and Valves _____

_____

_____

_____

Exterior Structural Steel, Plates and Manhole Frame _____

_____

_____

_____

_____

ATTACHMENT 5

ACOUSTIC DATA
SUMMARY SHEET

Octave Band Geometric Mean Frequency (Hertz)	Equipment Without Acoustic Treatment or Guarantee	Equipment With Maximum Sound Level Guarantee of 90 dBA at 1 meter (3 feet)
63	_____	_____
125	_____	_____
250	_____	_____
500	_____	_____
1000	_____	_____
2000	_____	_____
4000	_____	_____
8000	_____	_____

Kind of levels given, indicate which of the following:

Sound Power Levels, re 10 (exp -12) watt	_____	_____
Sound Pressure Levels re 2x10 (exp -4) microbars	_____	_____

If sound pressure levels are given, indicate both of the following:

Weighting network use A, B, C, or Linear (None)	_____	_____
Distance to sound source Feet or Meters	_____	_____

Vendor Comments: _____

_____

_____

_____

LAKHRA POWER FEASIBILITY STUDY

SPECIFICATION M-13

HIGH PRESSURE POWER PIPING

AND HANGERS

LPS-2/B1825/D3

325

SPECIFICATION M-13

HIGH PRESSURE PIPING AND HANGERS

TABLE OF CONTENTS

ITEM	TITLE	PAGE
1.0	DESCRIPTION OF WORK	1
2.0	WORK INCLUDED	1
3.0	WORK NOT INCLUDED	1
4.0	APPLICABLE CODES AND STANDARDS	1
5.0	SUPPLEMENTAL DATA	2
6.0	VENDOR DATA	2
7.0	DESIGN REQUIREMENTS	3
8.0	PERFORMANCE REQUIREMENTS	10
9.0	MATERIAL REQUIREMENTS	10
10.0	FABRICATION AND ASSEMBLY REQUIREMENTS	10
11.0	INSTALLATION REQUIREMENTS (NONE)	12
12.0	PERSONNEL REQUIREMENTS	12
13.0	INSPECTIONS AND TESTS	12
14.0	CLEANING, CORROSION PROTECTION, AND COATING	13
15.0	MARKING AND IDENTIFICATION	13
16.0	PACKAGING, SHIPPING, AND STORAGE	14
17.0	ACCEPTANCE CRITERIA	14

ATTACHMENTS

1. Power Piping Class Sheets
2. Power Pipe Line List
3. Weld End Preparation Schedule
4. Weld End Preparation Detail - Figures A and B
5. Instrument Taps, Thermowell and Nozzle Details - Figures C thru F
6. Vendor Data Summary Sheets (4 Sheets)

LAKHRA POWER FEASIBILITY STUDY
SPECIFICATION M-13
HIGH PRESSURE POWER PIPING
AND HANGERS

1.0 DESCRIPTION OF WORK

The work to be performed consists of furnishing and delivering to the jobsite the high pressure piping, pipe hangers, and piping restraints as listed in Section 2.0 below. The piping and hangers will be used at two 350 MW Coal Fired Units for Pakistan's Water and Power Development Authority (WAPDA) to be located in Pakistan.

2.0 WORK INCLUDED

The work to be performed shall include, but not be limited to, the following:

2.1 Main steam piping and hangers.

2.2 Hot and cold reheat piping and hangers.

2.3 Boiler feedwater (including superheater spray water) piping and hangers.

2.4 Piping restraints as determined by the Purchaser's Engineer.

3.0 WORK NOT INCLUDED

The following items are not included in the requirements of this specification and will be accomplished by others.

3.1 Unloading and storing.

3.2 Installation.

4.0 APPLICABLE CODES AND STANDARDS

The following codes and standards are applicable to the work to the extent specified herein:

4.1 American Society of Mechanical Engineers (ASME) Boiler and Pressure Vessel Code Sections I, V, VIII, and IX.

4.2 American National Standards Institute (ANSI).

ANSI/ANSI B31.1c Power Piping

B16.11 Steel Fittings - Socket Welding and Threaded

4.3 Pipe Fabrication Institute (PFI) Standards.

ES-3

4.4 American Society for Nondestructive Testing (ASNT) Recommended Practice No. SNT-TC-1A, and all supplements.

4.5 American Institute of Steel Construction (AISC) Specification for the Design, Fabrication and Construction of Structural Steel for Buildings.

4.6 American Welding Scoiety (AWS) D1.1., Structural Welding Code.

4.7 The issue or revision date of all codes or standards referenced in this Specification will be shown in parenthesis immediately after the code or standard.

5.0 SUPPLEMENTAL DATA

The items listed on the contents page under Attachments are hereby made a part of this Specification.

6.0 VENDOR DATA

6.1 The Purchaser's Engineer will furnish to the Vendor one reproducible of each of the Purchaser's Engineer's Piping Drawings for a complete system for Vendor's use. The Vendor shall prepare shop detail sheets and isometrics for complete piping systems on as many sheets as the Vendor deems necessary. The details required on the Vendor prepared isometric sheets are outlined in Paragraph 6.6. These isometrics, when approved and released for fabrication by the Purchaser's Engineer, shall become the basis for the Vendor's fabrication of all piping materials.

6.2 The Purchaser's Engineer may furnish to the Vendor, for information and checking purposes, drawings of related equipment to which piping connections are to be made.

6.3 The Purchaser's Engineer may furnish to the Vendor drawings of general arrangement, stuctural steel and concrete work, and electrical work for Vendor's reference.

6.4 The Vendor shall prepare all necessary shop detail and isometric sheets for all systems in accordance with this Specification. Purchaser's Engineer's P&ID Diagrams and Piping

Drawings show the pipe sizes and Power Piping Classes to be followed for each pipe line. Any exceptions, restrictions, or additions to the Power Piping Class will be noted on the Drawings.

6.5 The Vendor shall design the piping assemblies to minimize the amount of field fabrication while meeting the practical requirements of shipping, erection, and handling limitations.

6.6 PIPING ISOMETRICS

6.6.1 Detailed piping isometrics for all systems within the scope of this specificatin will ultimately be used for field erection. It is not the intent of the Purchaser's Engineer to specify a method of isometric production, rather to utilize the Vendor's standard method and incorporate certain specific requirements.

6.6.2 The Vendor shall prepare isometrics of piping systems based on the Purchaser's Engineers piping drawings and submit one sepia of each isometric to the Purchaser's Engineer for approval. The Vendor shall submit all isometrics for complete systems at one time. No partial submission will be accepted. Each isometric shall incorporate the following:

6.7 Size:

Vendor's standard size, but not to exceed 760mm x 1015mm (30"x40").

6.8 Details:

The piping isometrics shall show (a) pipe spool piece numbers, (b) shop weld locations, (c) pipe reference location (elevation, at least one column row intersection, and a north arrow), (d) field weld location with a 5mm x 13mm (3/16"x1/2)" box for a field weld number, (e) flow direction arrow, (f) instrumentation tap locations, and Purchaser's Engineers identifying number, (g) valve location, dimension, and Purchaser's Engineer's identifying number, and (h) Vendor furnished loose material. All of the above items are available to the Vendor from the Purchaser's Engineer's piping drawings except Items (a), (b), (d), and (h).

7.0 DESIGN REQUIREMENTS

The high pressure piping shall be designed to operate under the following requirements and have the following features:

7.1 The Main Steam and Boiler Feed systems as defined by the scope of the ASME Boiler and Pressure Vessel Code, Section 1, and all references included therein are under the jurisdiction of that code with respect to ASTM reporting and stamping.

7.2 The Main Steam, Hot and Code Reheat, and Boiler Feedwater shall be fabricated in accordance with ANSI/ASME B31.1c.

7.3 DIMENSIONS

All piping shall be fabricated to the overall dimensions shown on the dimensioned piping drawings, keeping in mind the intermediate field welds.

7.4 The final closure weld shall be in the location determined on the dimensioned piping drawing by the Purchaser's Engineer.

7.5 The attached Power Piping Classes list minimum allowable inside diameters for the Main Steam, Hot Reheat, Cold Reheat, and Boiler Feedwater. The Vendor, when purchasing pipe, shall add allowances for mill tolerances and fabricating consideration to conform to the minimum dimensions listed in accordance with the codes referenced herein and the respective parameters listed in the Power Piping Class sheets.

7.6 All materials welded to or into the piping assemblies shall be of a material compatible with the base material of the pipe. This requirement includes backing rings, saddles for nozzle reinforcement, hanger lugs, and insulation support lugs.

7.7 Tapered machined backing rings shall be supplied for all field welds. The Vendor shall match fit and mark all backing rings in his shop to insure ease of assembly for field welds. Any necessary machining shall be a part of the lump sum bid for each system as well as marking the backing ring and corresponding pipe.

7.8 All safety valve nozzles shall be designed in accordance with ANSI/ASME B31.1c Appendix II - Nonmandatory Rules for the Design of Safety Valve Installations.

7.9 The piping shall be cut short in accordance with the Purchaser's Engineer's Drawings to provide for thermal expansion and terminal movements.

7.10 In addition to the cut short in paragraph 7.9, the Engineer's Drawings for piping containing steam shall be level and plumb during normal operation. The Purchaser's Engineer's Drawings will specify elevations of the piping at critical locations.

7.11 Pricing for nondestructive examination, shop welds, preheating, normalizing, and end bevel preparation shall be included in the Lump Sum bid for each piping system specified.

7.12 BENDING

7.12.1 All pipe shall be filled with sand before bending. The pipe shall be bent with a minimum amount of flattening and no wrinkling or cracking. Bends shall be made by heating the pipe to a temperature determined by the Vendor and subject to review by the Purchaser's Engineer. Subsequently, the pipe shall be placed on a bending table and shall be bent in the temperature range determined by the Vendor and subject to review by the Purchaser's Engineer.

7.12.2 During heating and bending, a continuous record of the metal temperature shall be made on an automatic recording potentiometer. This record is to be made so that overheating shall be prevented and that bending shall be made within the specified temperature range.

7.12.3 During hot working of the pipe, care shall be exercised to avoid contact with nonferrous metals or alloys.

7.12.4 No quenching shall be permitted during the bending operation. The pipe shall be cooled in still air.

7.12.5 The Vendor's procedures for normalizing shall be submitted to the Purchaser's Engineer for review.

7.12.6 All bending shall be performed within tolerances as set forth in the latest issue of PFI Standard ES-24.

7.13 INSTRUMENT TAPS

7.13.1 The steam sampling elements shall be installed according to Attachment 5, Figure F. The sample elements shall be furnished by the Purchaser and supplied to the piping fabricator for installation. Mounting installation is subject to approval by the Purchaser's Engineer.

7.13.2 The water sampling elements shall be installed according to Attachment 5, Figure F. The sample element (pipe nipple) shall be furnished and installed by the piping fabricator.

7.13.3 All pressure tap connections shall be installed according to Attachment 5, Figure C. All pressure taps shall conform to ANSI/ASME Standard B31.1c.

7.13.4 All thermocouple wells shall be installed according to Attachment 5, Figures D and E. The thermocouple wells shall be furnished by the Purchaser and supplied to the piping fabricator for installation.

7.13.5 Flow nozzles (furnished by others) shall be installed by the Vendor in each piping system. The Vendor shall be required to special bore the piping for the flow nozzles as provided by the Purchaser's Engineer. The Vendor shall be responsible for having the complete assembly calibrated and flow tested at a facility approved by the Purchaser's Engineer. The flow nozzles (furnished by others) include the following:

Location
BFP Discharge
Superheat Spray Water
Superheat Spray Water
Superheat Spray Water

7.14 HANGERS

7.14.1 The term "piping hangers" shall apply only to devices designed to adequately support the pipe during normal operation and hydrostatic testing.

7.14.2 The term "piping restraints" shall apply to devices whose function is not solely for the support of the pipe.

7.14.3 When selecting pipe hangers the Vendor shall assume the maximum movements of the pipe occur so as to minimize the resulting loads and moments on the boiler connections.

7.14.4 Terminal movements and locations of anchors, guides, and restraints required by the Purchaser's Engineer will be shown on the Drawings.

7.14.5 Terminal point vertical movement from cold to hot position of Main Steam, Hot and Cold Reheat, and Boiler Feed Piping shall be as follows:

Pipe Designation	Downward Movement
Main Steam Outlet Header @ Elev.	(Later)
Hot Reheat Outlet Header @ Elev.	(Later)
Cold Reheat Header @ Elev.	(Later)
Economizer Inlet Header @ Elev.	(Later)
Hot Reheat @ Turbine	(Later)
Cold Reheat @ Turbine	(Later)
Main Steam @ Turbine Throttle Valves	(Later)

7.14.6 All structural steel support members for hangers and frames for restraints 4.6m (15'-0") and less shall be supplied as part of the hanger assembly. Support members greater than 4.6m (15'-0") shall be supplied by others.

7.14.7 Variable support hangers shall generally be avoided in the design of pipe hangers for the pipe within the scope of this Specification. Any intended usage of variable support hangers shall have the approval of the Purchaser's Engineer.

7.15 HANGER DESIGN

The following items shall be incorporated into the design of the pipe hangers:

7.15.1 The design of the pipe hangers shall conform to ANSI/ASME Standard B31.1c and MSS Standard Practices for Pipe Hangers and Supports SP-58 "Materials and Design" and SP-69 "Selection and Application."

7.15.2 For horizontal piping runs, hangers shall be located on major column lines. For vertical piping runs, hangers may be supported from the following floor elevations.

(Elevations Later)

7.15.3 The Vendor shall submit location, loads and moments of all hangers in each system for Purchaser's Engineer review and

approval. Rigid hanger detail sheets shall show the maximum allowable load. Constant support detail sheets shall show load, total travel, calculated travel, and direction of movement for hot, cold, and erected position. The hydrostatic test load shall also be shown for each hanger not designed for liquids.

7.15.4 Support lugs welded to piping shall be of material that is compatible with the piping material. Welded lugs that require post-weld heat treatment shall be attached in the pipe fabrication shop.

7.15.5 Each hanger shall have a turnbuckle for vertical adjustment and a locknut for locking the turnbuckle.

7.15.6 Rods shall be vertical in the hot position. Where rod angularity would exceed 4 degrees from vertical in the cold position, roller assemblies shall be furnished at the supporting steel.

7.15.7 Constant support hangers shall be used for critical systems where vertical movement exceeds 19mm (3/4") or where transfer of load to adjacent hangers or equipment cannot be tolerated.

7.15.8 Total travel for constant support hangers shall exceed calculated travel by at least 25mm (1") or 20 percent whichever is greater.

7.15.9 Constant support hangers shall be furnished with travel stops and designed for the hydro testing. The stops shall be factory installed so that the hanger lever is in the cold position. The stops shall be permanently attached to the hanger assembly and of such a design as to allow future re-engagement, although hanger may be at some other position than cold, without adjustment of rod length.

7.15.10 All rods shall be carbon steel. All eye bolts shall be welded.

7.15.11 An abnormal concentration of hangers and/or supports on one beam shall not be allowed. Vendor shall advise Purchaser's Engineer specifically and promptly of any case where overloading is unavoidable.

7.15.12 Hanger positions shall be carefully selected so that supporting steel stresses are minimized and field work is made as simple and inexpensive as possible.

7.15.13 Design rules to be followed are:

7.15.13.1 Minimize number of hangers on any one beam.

7.15.13.2 Place hanger concentric with supporting steel member.

7.15.13.3 Place hanger as far from center of beam as possible.

7.15.13.4 Use single plate lug attachments welded to beam at centerline where possible. Hanger attachments which distribute loads across the supporting beam flange must be supplied with adequate web stiffeners to prevent flange distortion.

7.16 HANGER FIELD ADJUSTMENT

The Vendor shall provide an engineer on a per diem basis for field adjustment of hangers. The following procedures for field adjustment shall be incorporated:

7.16.1 Hangers shall be adjusted for the proper load when cold and checked after the system is heated to see that the setting is correct for the hot condition. The Vendor shall make a permanent record of all hanger loads and hanger indicator positions in both the hot and cold positions. This record shall be made available to the Purchaser's Engineer.

7.16.2 Where two or more constant support hangers are placed in a piping system, balancing of the loads shall be accomplished by turning the field load adjustment bolt on each support so that the travel indicator is off the stops but allowing for maximum travel.

7.16.3 During unit start-up, piping systems that have vibration or are shaking shall be noted and corrective measures shall be taken immediately. Such corrective measures shall have the approval of the Purchaser's Engineer.

7.17 Following award of contract, the Purchaser's Engineer will supply all reasonable data necessary for the Vendor's selection of the appropriate piping restraints, and in particular, the restraints necessary for the safety and relief valves adjacent to the boiler connections. The Vendor may review and comment on the selection of restraints, but neither the Purchaser nor his Engineer shall be liable for the cost of any Vendor review.

7.18 The Vendor shall make available to Purchaser's Engineer upon request all calculations by the Vendor. All designs by the Vendor are subject to Purchaser's Engineer review but such

inspections and reviews do not relieve the Vendor of responsibility for a proper design.

8.0 PERFORMANCE REQUIREMENTS

The high pressure piping when installed and functioning shall be guaranteed for the following:

8.1 Fabricated to the sizes and dimensions shown on the Purchaser's Engineer's Drawings and within the tolerances of PFI Standard ES-3.

8.2 Fabrication of materials in compliance with the Purchaser's Engineer's specifications.

8.3 Fabricated, heat treated, examined, cleaned, and prepared for shipment in compliance with the Purchaser's Engineer's specifications.

8.4 Furnished in compliance with all codes, standards, laws, and regulations.

9.0 MATERIAL REQUIREMENTS

All materials used shall be in accordance with the requirements as set forth on the Power Piping Class sheets attached for the various high pressure piping systems.

10.0 FABRICATION AND ASSEMBLY REQUIREMENTS

10.1 Preparation of Assembly for Welding

10.1.1 Ends to be welded shall be cleaned thoroughly, inside and outside, of all rust, scale, grease, oil, paint, or any condition which may be detrimental to the quality of the completed joint. Joints shall be in proper alignment and shall be held with clamps before tack welding.

10.1.2 Tack welds may be used for assembly purposes using a wedge or spacing blocks, either 19mm (3/4") long "U" shaped or round. The same material as the base metal shall be used. Tack welds may be used only between the spacer blocks and the grooved side walls. Tack welds shall be made substantially flush with the pipe surface and shall be removed from the immediate area of the base metal, when the spacer blocks are removed. The maximum numbers of tack welds are as follows:

Size of Pipe	Number of Welds
150mm (6") and smaller	3
200mm (8" and 10")	4
300mm (12")	6
400mm (16") ID and larger	8

10.1.3 Tack welds for heavy pipe shall be no longer than 40mm (1-1/2").

10.2 Welding

10.2.1 The Vendor's welding procedure shall comply with the requirements of the ASME Boiler and Pressure Vessel Code, Section IX, and/or paragraph 127.5 of ANSI/ASME B31.1c, Power Piping Code.

10.2.2 The Vendor shall also comply with paragraph 127.6 of ANSI/ASME B31.1c for all systems within the scope of this specification.

10.2.3 All nozzles or branch welds shall be reinforced with welding saddles of material with the same chemical and mechanical properties as the pipe. Before the saddle is welded into place, the nozzle weld shall receive a hydrostatic test equal to the operating pressure plus 25 percent.

10.2.4 All socket welds shall conform to the requirements specified in ANSI B16.11, and standards listed in Table 126.1 and Figure 127.4.4, C of ANSI/ASME B31.1c. A 1.5mm (1/16") approximate gap between the pipe and the bottom of the socket shall be provided before welding.

10.2.5 Welding shall be continued with as few interruptions as possible. In no case shall the welding be interrupted before a minimum of at least 9.5mm (3/8") thickness of weld deposit or 25 percent of the welding groove is filled, whichever is greater. An "interruption" is defined as when the weld area is allowed to cool below minimum preheat temperature.

10.2.6 The Vendor shall submit his Welding Method Procedures to the Purchaser's Engineer for review.

10.2.7 For field weld end details, see attached Drawings "Weld End Preparation Detail," Figures A and B.

10.3 Preheat and Interpass Temperature for Welding

10.3.1 The preheat temperature shall meet the requirements of ANSI/ASME B31.1c - Power Piping Code paragraphs 131.2 and 132 as applicable, and the applicable Vendor Welding Method Procedure.

10.3.2 The Vendor shall be required to submit to the Purchaser's Engineer for review his procedures for preheat, interpass temperature, and stress relief methods, techniques, control and documentation.

10.4 Full Furnace Stress Relief

10.4.1 For final stress relieving treatment, the pipe shall be placed in an annealing furnace, properly supported to prevent distortion.

11.0 INSTALLATION REQUIREMENTS

None

12.0 PERSONNEL REQUIREMENTS

The Vendor shall employ the following qualified personnel to perform the work:

12.1 All welding shall be performed by welders qualified under the requirements of the ASME Boiler and Pressure Vessel Code Section IX.

12.2 All radiography shall be performed and interpreted by a Level 2 Radiographer as defined in ASNT Recommended Practice No. SNT-TC-1A, paragraph I-IV, Supplement A.

13.0 INSPECTIONS AND TESTS

13.1 All main steam welds shall have a radiographic examination after stress relieving in accordance with the requirements of the ASME Boiler and Pressure Vessel Code, Section 1.

13.2 Welds on the hot and cold reheat and the high pressure boiler feedwater systems shall be examined after stress relieving in accordance with the requirements of ANSI/ASME B13.1C, Chapter VI.

13.3 Field Butt Welds requiring radiographic examination shall have an access port and plug provided by the Vendor during shop fabrication for all pipes 250 mm (10 inches) and larger. Port and plug shall be in acordance with PFI Standard ES-16.

13.4 A hold point shall be established prior to shipment after completion of all inspections and tests and prior to packaging piping for shipment.

13.5 An inspection hold point shall be established immediately following the backing ring fit up as detailed in Paragraph 7.7.

13.6 Certificate of Test

The Vendor shall supply the Purchaser's Engineer with a certified copy of the incoming mill reports for the piping to be used on this job. The incoming mill reports and the pipe shall be identified so that, for each length of pipe, the associated mill report can be obtained.

14.0 CLEANING, CORROSION PROTECTION AND COATING

14.1 All material, both fabricated and commercial, shall be cleaned and protected for shipment.

14.2 Cleaning shall consist of grit or shot blasting the inside where required. The Vendor shall submit to the Purchaser's Engineer for review the material(s) he intends to use for grit or shot blasting. It shall also consist of the removal of all oil and grease residue, and the removal of all weld spatter beads. Bends shall be wire brushed on the outside, but shall be grit blasted or turned with a wire brush on the inside.

14.3 The Vendor's standard for the protection of the outside diameter, such as lacquer with primer over welds, is acceptable.

14.4 Ends of fabricated sections shall be protected with metal caps to exclude foreign material and shall be of suitable strength to protect end bevels. The design of the caps shall be reviewed by the Purchaser's Engineer.

14.5 All Weld-O-Let, Thread-O-Let, thermowells and steam sample connections shall be protected for shipping by blocking with 76mm x 76mm (3" x 3") hardware and steel banded, or by other methods approved by the Purchaser's Engineer, to insure arrival in an undisturbed state at the plant site. Further, all installed thermowells should be capped to prevent collection of dust, grease, and moisture.

15.0 MARKING AND IDENTIFICATION

15.1 The Vendor shall mark an identification number on each piping assembly, component, or pre-engineered hanger that he ships. The number shall be marked durably and legibly. The identification shall consist of the appropriate two or three-letter abbreviation of system name, Engineer's drawing number, the Vendor's item number, and any other identification which will aid the field.

15.2 Constant support hangers shall have permanent metal nameplates, securely fastened, to show supplier's name, model, size, load

or travel range, and set points. Adhesive decals or labels will not be allowed.

16.0 PACKAGING AND SHIPPING

16.1 Effective safeguards shall be used to protect the piping during transit and outdoor storage:

16.2 All open pipe ends and connections shall be capped or plugged to prevent the entry of dirt and foreign material.

16.3 Welding ends machined for solid backing rings shall be protected by a plywood or hardboard liner disc held securely against the beveled end by a metal cap which has been securely banded or taped to the pipe.

16.4 Other machined welding ends need only be protected by the metal cap without the liner disc.

16.5 Flange faces shall be protected by a solid plywood or hardboard disc, matching the outside diameter of the flange, and securely mated to the flange face.

16.6 All pipe taps and socket wells shall be securely plugged with wooden or plastic plugs.

16.7 Random fittings shall be shipped in crates, cartons, or bags suitable for maintaining cleanliness during shipment and storage.

17.0 ACCEPTANCE CRITERIA

The Vendor shall comply with the following requirements before submitting the work for acceptance:

17.1 Submittal of Mill Reports and Test Reports.

17.2 Submittal and approval of all necessary shop detail and isometric sheets.

17.3 Submittal of welding and bending procedures.

17.4 Satisfactory completion of all fabrication tests and inspections and required test documentation.

ATTACHMENT 1

PIPING CLASS 1501CS
(BFP DISCHARGE PIPING)

Design Conditions:

19,305 kPa (2,800 psig), 4,137 kPa (600 psig) field hydro pressure SE = 103,422 kPa (15,000 psi), y + 0.4, A = 3mm (0.125").

Pipe Material: ASTM A 106, Grade B carbon steel.

Pipe: 20mm (3/4") through 150mm (6") - Schedule XXS.

350mm (14") nominal OD, minimum wall (based on 19,305 kPa (2,800 psig) = 34.3mm (1.35"), C dimension = 286mm (11.259") (+.25mm (+0.010"), -0.000").

250mm (10") nominal OD, minimum wall = 26.9mm (1.06"), C dimension = 218.2mm (8.589") (+.25mm (+0.010"), -0.000").

200mm (8") nominal OD, minimum wall = 22.35mm (.88"), C dimension = 173.3mm (6.824") (+.25mm (+0.010"), -0.000").

Minimum wall thickness, in accordance with ANSI B31.1 - latest edition.

Fittings: 20mm (3/4") through 50mm (2") - Forged carbon steel, socket welding type, ANSI B16.11, ASTM A 105, 6000 lb rating.

65mm (2 1/2") through 150mm (6") - Carbon steel, butt welding type, same schedule as pipe, ANSI B16.9, ASTM A 234, Gr WPB.

200mm (8") through 350mm (14") - Carbon steel, butt welding type, same pressure-temperature rating as pipe, ASTM A 234, WPB (A 515, Gr 70 plate or A 181, Grade II forging).

Flanges: None

Branch Connections:

50mm (2") and smaller - Socket weld ASTM A 181, Class 60, XXS.

Unions: None

Gaskets: None

Bolts: None

ATTACHMENT 1

PIPING CLASS 1501CS
(BFP DISCHARGE PIPING)
(Continued)

Valves: 20mm (3/4") through 50mm (2") - 1,500 lb forged carbon steel, socket welding ends.

65mm (2 1/2") and larger - 1,500 lb cast carbon steel, butt welding ends, pressure seal bonnets. Pressure containing castings shall have radiographic examination in accordance with MSS SP-54.

Weld End Preparation:

50mm (2") and smaller - Square cut, reamed, and deburred.

65mm (2 1/2") to 100mm (4") - See "Weld End Preparation Detail," Section 4.3, Figure A.

150mm (6") and larger - See "Weld End Preparation Detail," Section 4.3, Figure B.

Backing Ring for Field Butt Welds:

65mm (2 1/2") through 100mm (4") - Carbon steel split-type with strike-off spacer pins.

150mm (6") and larger - Carbon steel solid machined ring.

Nondestructive Examination:

Per requirements of Table 136.4 in current edition of ANSI/ASME B31.1c; also all weld end preparations 125mm (5") and larger shall be magnetic particle or liquid penetrant examined. The following Supplementary Requirements per ASTM Specification A 106 shall also be performed on one end only:

S4 - Flattening Test
S5 - Finish and Metal Structure

ATTACHMENT 1

PIPING CLASS 2501AS
(MAIN STEAM)

Design Conditions:

13,170 kPa (1,910 psig), 513°C (955°F), SE = 72,910 kPa (10,560 psi).

Pipe: 20mm (3/4") to 80mm (3") - ASTM A 335, Gr P11, SCH.160.

125mm (5") nominal OD, 12.7mm (5"), minimum wall, 116.4mm (4.58") C dimension (+.25mm (+0.010"), -0.000")

200mm (8") nominal OD, 18.3mm (.72") minimum wall, 181.5mm (7.144") C dimension (+.25mm (+0.010"), -0.000").

400mm (16") nominal OD, 35.6mm (1.4") minimum wall, 335mm (13.159") C dimension (+.25mm (+0.010"), -0.000").

500mm (20") nominal OD, 43.2mm (1.7") minimum wall, 420.6mm (16.559") C dimension (+.25mm (+0.010"), -0.000").

Fittings: 25mm (1") to 40mm (1 1/2") - ASTM A 182, Gr F11, socket weld, forged, 6,000 lb.

All others - ASTM A 182, Gr F11, forged, butt weld, same pressure-temperature rating as pipe.

Flanges: None

Branch Connections:

20mm (3/4") to 50mm (2") - XXS, A 182, Gr F11, sockolet or equal.

Unions: None

Gaskets: None

Bolts: None

Valves: 25mm (1") to 50mm (2") - 2500 lb, forged, socket weld.

65mm (2 1/2") and larger - 2500 lb cast, butt weld, pressure seal bonnet.

ATTACHMENT 1

PIPING CLASS 2501AS
(MAIN STEAM)
(Continued)

Weld End Preparation:

20mm (3/4") to 65mm (2 1/2") - See "Weld End Preparation Detail," Section 4.3, Figure A.

80mm (3") and larger - See "Weld End Preparation Detail," Section 4.3, Figure B.

Backing Ring for Field Butt Welds:

20mm (3/4") to 65mm (2 1/2") - Alloy steel split-type with strike-off spacer pins.

80mm (3") and larger - Alloy steel solid machined ring.

Nondestructive Examination:

Per requirements of Table 136.4 in current edition of ANSI/ASME B31.1. Butt weld end preparations shall be magnetic or liquid penetrant examined.

ATTACHMENT 1

PIPING CLASS 1501AS
(HOT REHEAT)

Design Conditions:

4,688 kPa (680 psig), 513°C (955°F), SE = 72,910 kPa (10,560 psi).

Pipe:

10mm (3/4") to 150mm (6") - ASTM A 335, Gr P11, Schedule 80.

200mm (8") to 600mm (24") - ASTM A 335, Gr P11, Schedule 80.

Over 600mm (24") - ASTM 671, Type 1.

Fittings:

20mm (3/4") to 50mm (2") - 3,000 lb, ASTM A 182, Gr F11, socket weld.

65mm (2 1/2") to 150mm (6") - ASTM A 234, Gr WP11, butt weld, same schedule as pipe.

200mm (8") to 600mm (24") - ASTM A 234, Gr WP11, butt weld, same schedule as pipe.

Larger than 600mm (24") - butt weld, MSS SP-48, ASTM A 234, Gr WP22, same pressure-temperature as pipe.

Flanges:

50mm (2") and smaller - 900 lb, forged, ASTM A 182, Gr F11, 1/4" raised face, socket weld.

65mm (2 1/2") and larger - 900 lb, forged, ASTM A 182, Gr F22, 7mm (1/4") raised face, weld neck.

Branch Connections:

50mm (2") and smaller - ASTM A 182, Gr F11, sockolet or equal, XXS.

65mm (2 1/2") and larger - Nozzle weld.

Unions: None

Gaskets: Spiral - wound type with 2.4mm (3/32") thick gauge ring, Type 316 stainless steel with canadian asbestos filler - Flexitallic Style CB.

Bolts: Bolt studs - ASTM A 193, Gr 16.

Nuts: Heavy Hex, ASTM A 194, Gr 3.

ATTACHMENT 1

PIPING CLASS 1501AS
(HOT REHEAT)
(Continued)

Valves: 20mm (3/4") to 50mm (2") - 800 lb, forged alloy steel, socket weld.

65mm (2 1/2) and larger - 900 lb, cast or forged alloy steel, butt weld, pressure seal bonnets.

Weld End Preparation:

50mm (2") and smaller - Square cut, reamed, and deburred.

65mm (2 1/2") to 200mm (8") - See "Weld End Preparation Detail," Section 4.3, Figure A.

250mm (10") and larger - See "Weld End Preparation Detail," Section 4.3, Figure B.

Backing Ring for Field Butt Welds:

65mm (2 1/2") through 200mm (8") - Alloy steel split-type with strike-off spacer pins.

250mm (10") and larger - Alloy steel solid machined ring.

Nondestructive Examination:

Per requirements of Table 136.4 in current edition of ANSI/ASME B31.1. Also, weld end preparation shall be magnetic particle or liquid penetrant examined.

ATTACHMENT 1

PIPING CLASS 601CS
(COLD REHEAT)

Design Conditions:

4,137 kPa (600 psig), 337.8°C (640°F), SE = 103,525 kPa (15,000 psi).

Pipe:

20mm (3/4") to 50mm (2") - ASTM A 106, Gr B, XS.

65mm (2 1/2") to 350mm (14") - ASTM A 106, Gr B, Standard Weight.

400mm (16") to 450mm (18") - ASTM A 106, Gr B, XS.

500mm (20") - ASTM A 106, Gr B, Schedule 40.

550mm (22") to 600mm (24") - ASTM A 106, Gr B, Schedule 60.

Fittings:

20mm (3/4") to 50mm (2") - 3,000 lb, socket weld, ASTM A 105.

65mm (2 1/2") to 600mm (24") - Butt weld, ASTM A 234, Gr WPB, same schedule as pipe.

Over 600mm (24") - Butt weld, ASTM A-234, Gr WPB, MSS SP-48, same pressure-temperature rating as pipe.

Flanges:

50mm (2") and smaller - 400 lb, forged, ASTM A 105, socket weld, 7mm (1/4") raised face.

65mm (2 1/2") and larger - 400 lb, forged, ASTM A 105, weld neck, 1/4" raised face.

Branch Connections:

50mm (2") and smaller - ASTM A 105, sockolet or equal, XS.

65mm (2 1/2") and larger - Nozzle weld.

Unions:

40mm (1 1/2") max. size, 3000 lb, forged carbon steel, socket weld, ground steel seats.

Gaskets:

Spiral - wound type with 2.4mm (3/32") thick gauge ring, Type 304 stainless steel with canadian asbestos filler - flexitallic Style CB.

ATTACHMENT 1

PIPING CLASS 601CS
(COLD REHEAT)
(Continued)

Bolts: Bolt studs - ASTM A 193, Gr B7.

Nuts: Heavy Hex, ASTM A 194, Gr 2H.

Valves: 20mm (3/4") to 50mm (2") - 800 lb, forged carbon steel, socket weld.

65mm (2 1/2") and larger - 400 lb, cast or forged carbon steel, butt weld.

Weld End Preparation:

50mm (2") and smaller - Square cut, reamed, and deburred.

65mm (2 1/2") through 450mm (18") - See "Weld End Preparation Detail," Section 4.3, Figure A.

500mm (20") and larger - See "Weld End Preparation Detail," Section 4.3, Figure B.

Backing Ring or Field Butt Welds:

65mm (2 1/2") through 450mm (18") - Carbon steel split-type with strike-off spacer pins.

500mm (20") and larger - Carbon steel solid machined ring.

Nondestructive Examination:

Per requirements of Table 136.4 in current edition of ANSI/ASME B31.1. Also, weld end preparation over 600mm (24") shall be magnetic particle or liquid penetrant examined.

ATTACHMENT 2

HIGH PRESSURE POWER PIPE LINE LIST

Line	Piping Class	DESIGN Pressure kPa	(PSIG)	Temp °C	(°F)
*Boiler Feedwater	1501 CS	19,305	(2,800)	315	(600)
*Main Steam	2501 AS	13,169	(1,910)	513	(955)
Hot Reheat	1501 AS	4,688	(680)	513	(955)
Cold Reheat	601 CS	4,137	(600)	338	(640)

*Includes auxiliary services

HIGH PRESSURE PIPING

	2½	3	4	6	8	10	12	14	16	18	20	22	24	OVER 24
2503C	SPECIAL													
2502C	XXS					SPECIAL								
2501A	XXS					SPECIAL								
1501A	Sch. 80							Sch. 100						SPECIAL
1502C	STD.							XS			Sch. 40	Sch. 60		SPECIAL

WELD END PREP. FIG. 1

WELD END PREP. FIG. 2

FIG. III

WELD END PREPARATION SCHEDULE

SAMPLE

ATTACHMENT 3

ATTACHMENT 4

WELD END PREPARATION DETAILS

FIGURE A

WELD END PREPARATION DETAIL

(FOR CARBON STEEL AND LOW CHROME PIPING
WITH WALL LESS THAN 9/16")

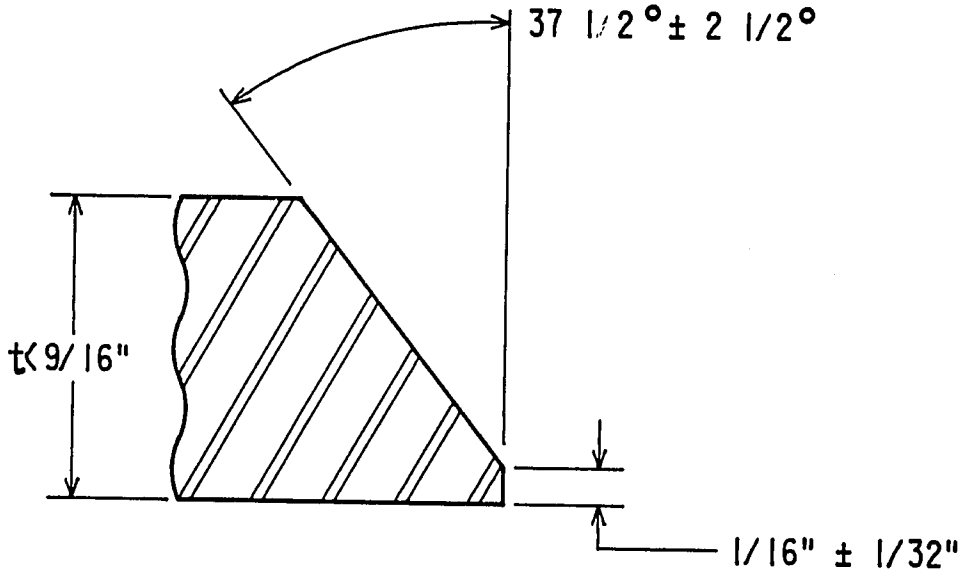

(FOR USE WITH SPLIT-TYPE COMMERCIAL BACKING
RING OF MATERIAL COMPATABLE WITH PIPE MATERIAL)

PIPING DESIGN AND CLASS STANDARDS

REV.	DATE	DESCRIPTION	DFTG.	CHK'D	ENG.	S. ENG.

MECH.	ELECT.	STRUCT.	I&C
DRAWN BY JLC 10/26/82	CHECKED BY	ENGINEER	SUPERVISING ENGINEER

PREPARED UNDER RESPONSIBLE SUPERVISION OF

AT THE OFFICE OF

COMMONWEALTH ASSOCIATES INC.
209 E. WASHINGTON AVE. JACKSON, MICHIGAN

OWNER

TITLE

JOB NO.

DRAWING NO. SHEET REV.

FIGURE B

WELD END PREPARATION DETAIL

(FOR CARBON STEEL AND LOW CHROME PIPING WITH WALL EQUAL TO OR GREATER THAN 9/16". COMPOUND BEVEL REQUIRED ONLY ON PIPING ABOVE 1" NOMINAL WALL THICKNESS. C BORE PER APPLICABLE FORMULA FOR OD OR ID SPECIFIED PIPE IN PFI STANDARD ES-1)

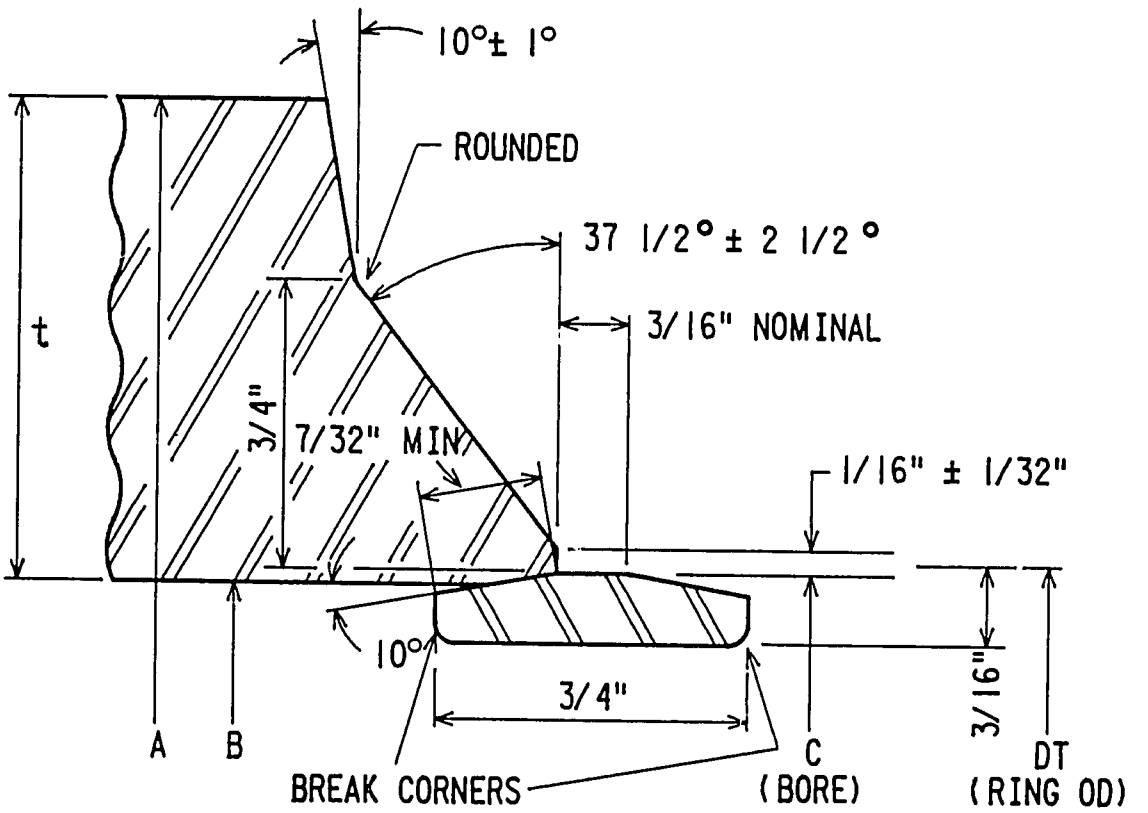

(FOR USE WITH MACHINED RING OR MATERIAL COMPATABLE WITH PIPE MATERIAL)

A = OUTSIDE DIAMETER
B = INSIDE DIAMETER

PIPING DESIGN AND CLASS STANDARDS

REV.	DATE	DESCRIPTION	DFTG.	CHK'D	ENG.	S. ENG.

MECH.	ELECT.	STRUCT.	I&C
DRAWN BY JLC 10/26/82	CHECKED BY	ENGINEER	SUPERVISING ENGINEER

PREPARED UNDER RESPONSIBLE SUPERVISION OF

AT THE OFFICE OF
COMMONWEALTH ASSOCIATES INC.
209 E. WASHINGTON AVE. JACKSON, MICHIGAN

OWNER

TITLE

JOB NO.

DRAWING NO. SHEET REV.

ATTACHMENT 5

INSTRUMENT TAPS

BRANCH CONNECTION/
INSTRUMENT TAP
FIGURE C

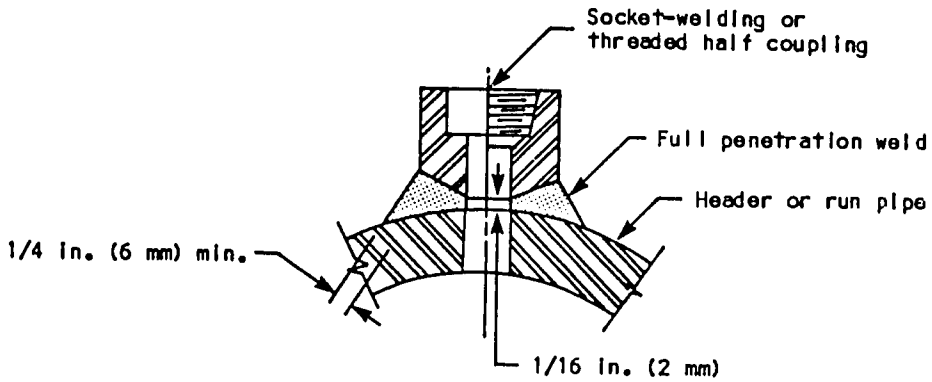

Branch Connection/Instrument Tap using ANSI B16.11 forged steel socket weld or threaded half coupling.

1. Use 3/4" socket weld for instrument pressure tap up to 800 psig or 700°F.
2. Use 1" socket weld for instrument pressure tap over 800 psig or 700°F.
3. Use 1" NPT for screwed thermowells up to 800 psig or 700°F.

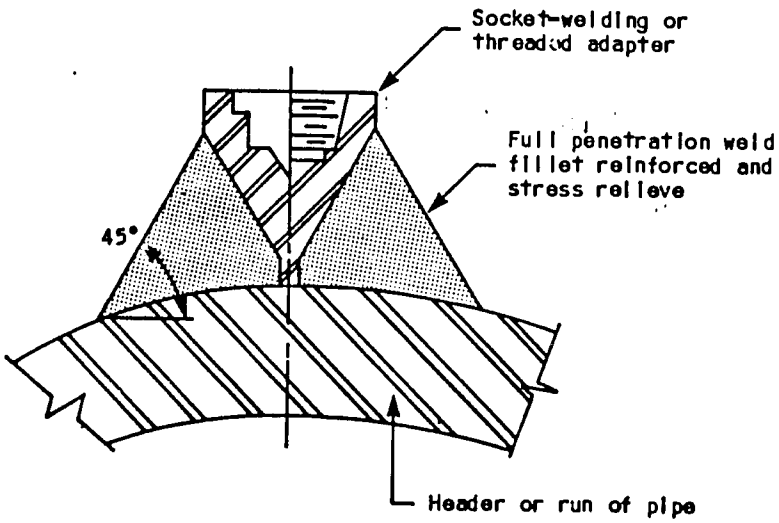

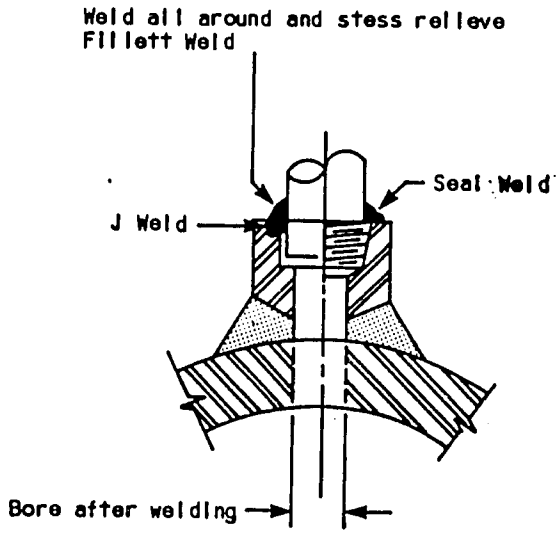

Branch Connection/Instrument Tap using special welded or threaded adapter where high pressure and temperature design conditions require fittings greater than ANSI B16.11 forged steel fittings.

1. Adapter wall thickness shall conform to Code Requirements for Pressure, Temperature, and Material Used.

WELD IN THERMOWELL
FIGURE D

TAG NUMBER(S)	WELL MAT'L	WELDOLET MAT'L	PIPE MAT'L	"A" DIM.	"B" DIM.	"C" DIM.	"L" DIM.	DESIGN PRESS.

DESIGN TEMP

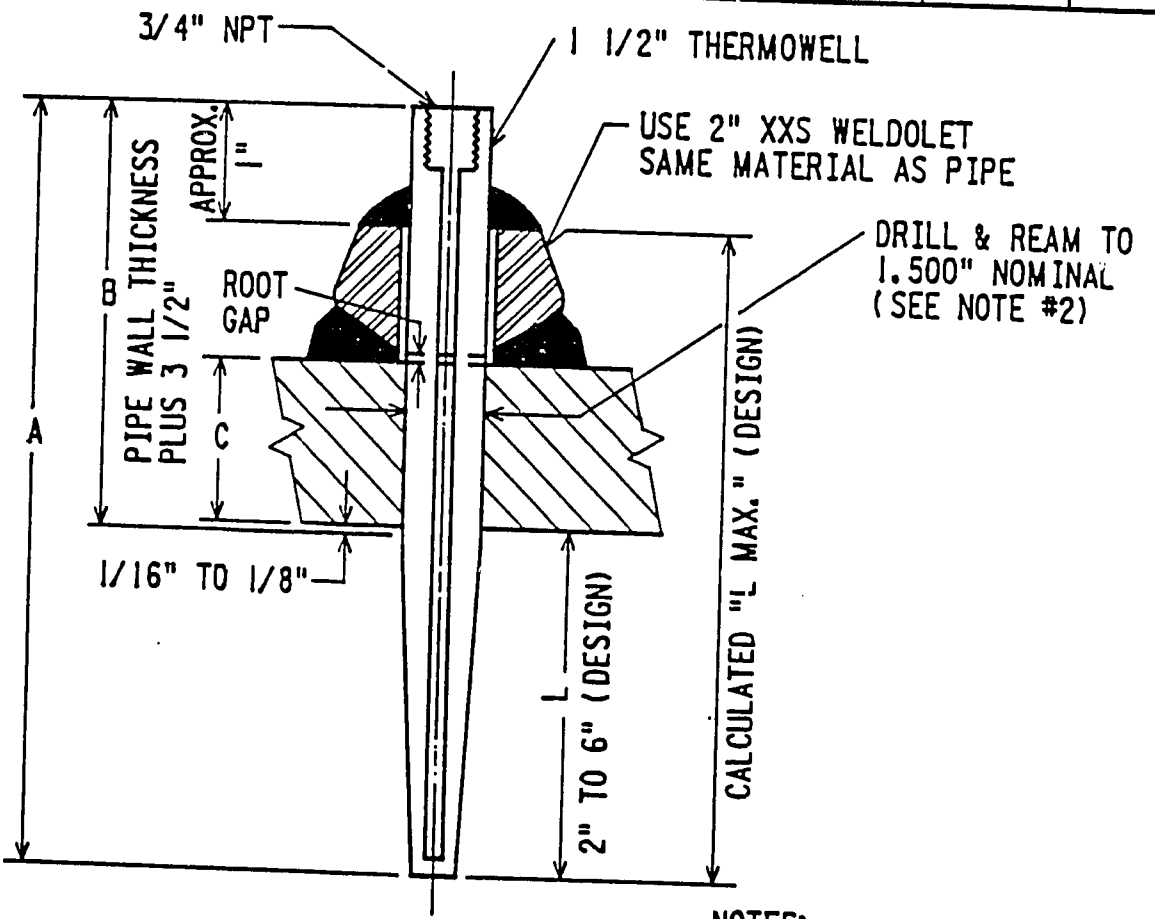

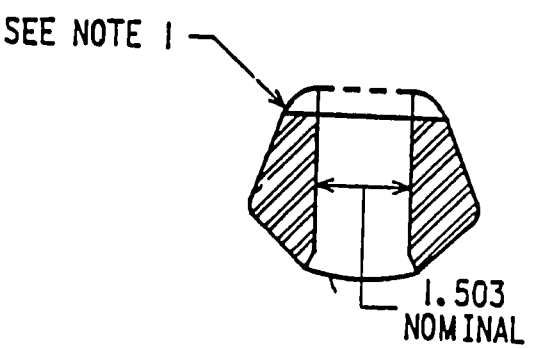

DETAIL " "
WELDOLET

NOTES:

1. GRIND OFF TAPERED LIP ON WELDOLET
2. MEASURE THERMOWELL DIAMETER WITH MICROMETER. DRILL AND REAM HOLE FOR A FORCED THERMOWELL FIT. THE FORCED FIT SHALL BE TIGHT, BUT NOT EXCESSIVE TO CAUSE DAMAGE TO THE THERMOWELL.
3. FOR WELLS IN HIGH VELOCIY SERVICE "L" DIMENSIONS SHALL BE CHECKED FOR LIMITATION OF MAXIMUM LENGTH BY PERFORMING THE FREQUENCY AND STRESS CALCULATIONS PER ASME PERFORMANCE TEST CODE 19.3-1974, "PART 3 TEMPERATURE MEASUREMENT". "L MAX." SHALL BE EQUAL OR LESS THAN CALCULATED MAXIMUM ALLOWABLE LENGTH.
4. IF CALCULATED "L MAX." LIMITS DESIGN COMPLIANCE REFER TO FIGURE "E".

SYS2

OS1:[362,4]ICS01.DGN

WELD IN AND MECHANICALLY
LOCKED (THREADED)
THERMOWELL (NOTE 3)
FIGURE E

TAG NUMBER(S)	WELL MAT'L	PIPE MAT'L	"A" DIM.	"B" DIM.	"C" DIM.	"L" DIM.	"T" DIM.	DESIGN PRESS.	DESIGN TEMP
							5/8"		

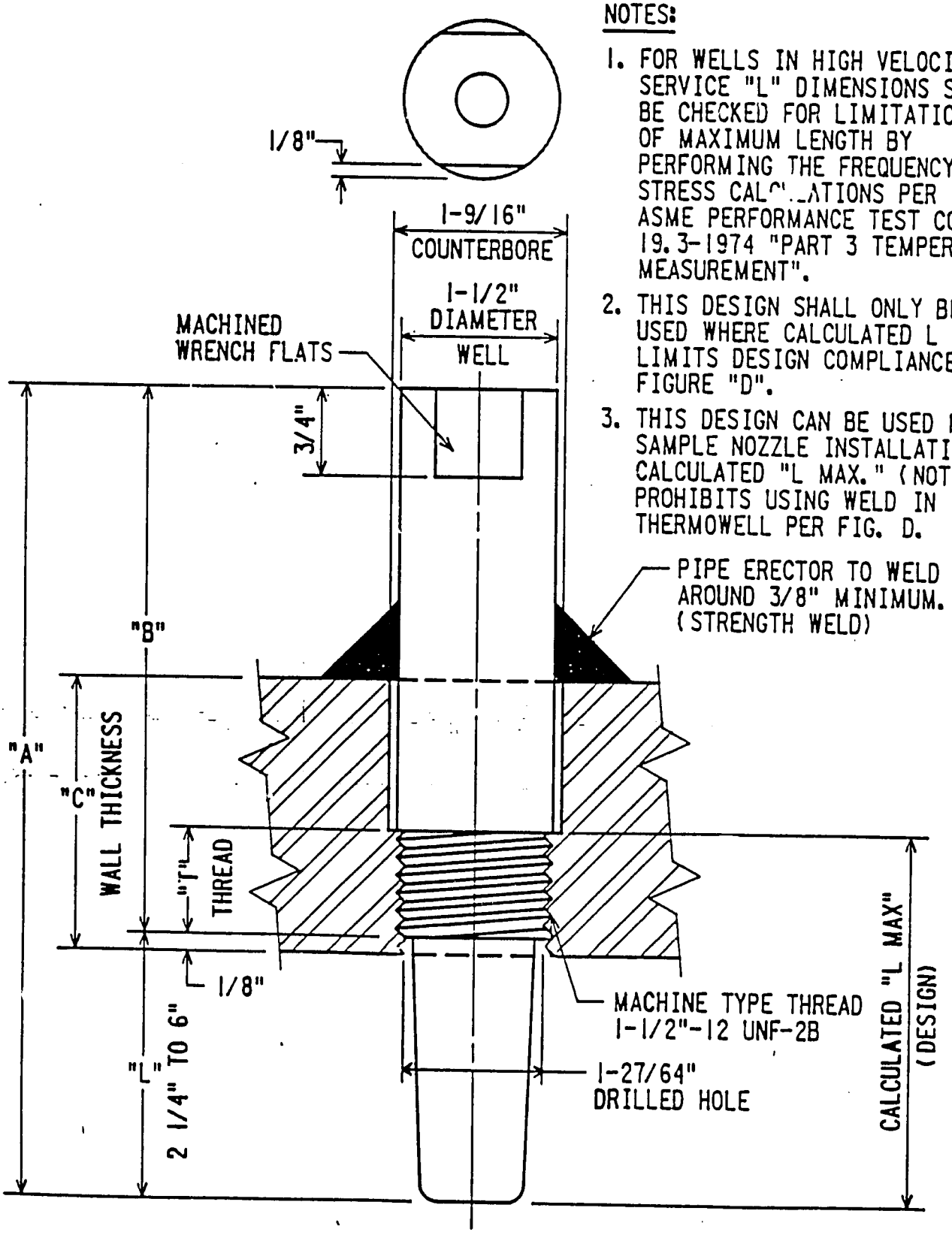

NOTES:

1. FOR WELLS IN HIGH VELOCITY SERVICE "L" DIMENSIONS SHALL BE CHECKED FOR LIMITATION OF MAXIMUM LENGTH BY PERFORMING THE FREQUENCY AND STRESS CALCULATIONS PER ASME PERFORMANCE TEST CODE 19.3-1974 "PART 3 TEMPERATURE MEASUREMENT".
2. THIS DESIGN SHALL ONLY BE USED WHERE CALCULATED L MAX. LIMITS DESIGN COMPLIANCE OF FIGURE "D".
3. THIS DESIGN CAN BE USED FOR STEAM SAMPLE NOZZLE INSTALLATION WHERE CALCULATED "L MAX." (NOTE 1) PROHIBITS USING WELD IN THERMOWELL PER FIG. D.

US11 364, 41 US102 DGN 1 TAB

FIGURE F

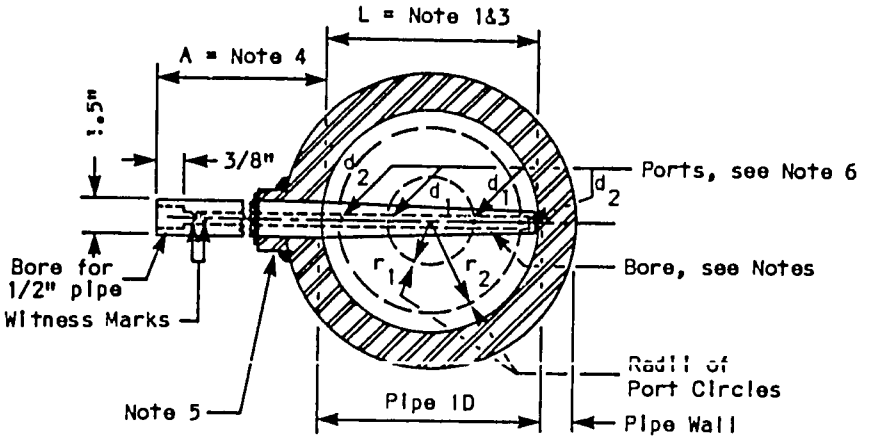

FOR LINES 6" AND SMALLER

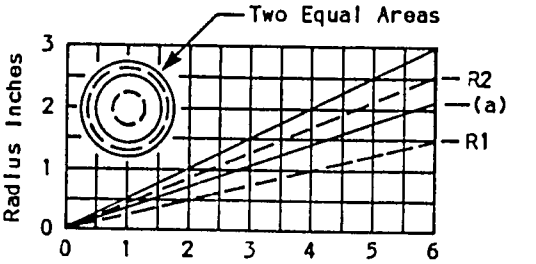

(a) Division Circle
(R1) & (R2) Port Circle

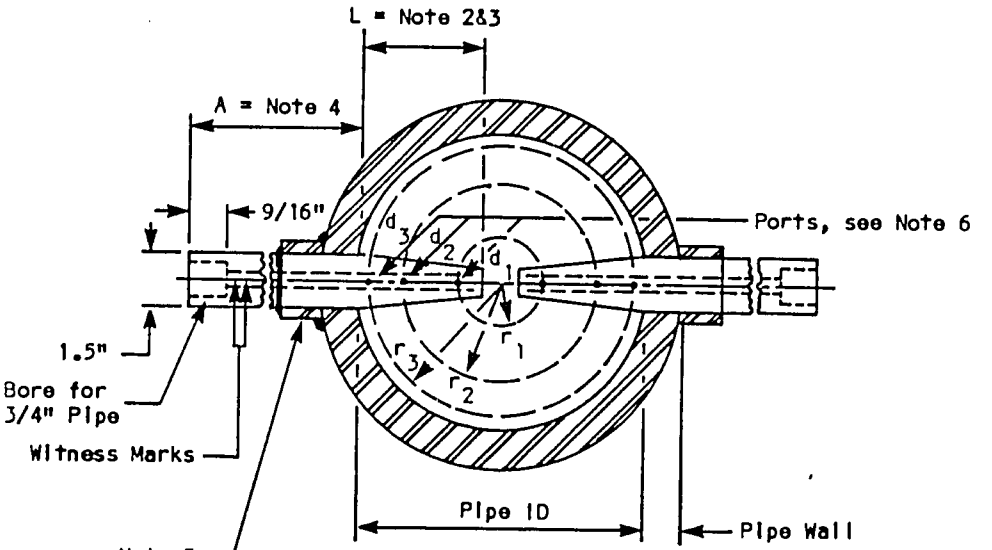

FOR LINES LARGER THAN 6"
STEAM SAMPLE NOZZLE/WELL

SELECT PORT RADIUS FROM CHART

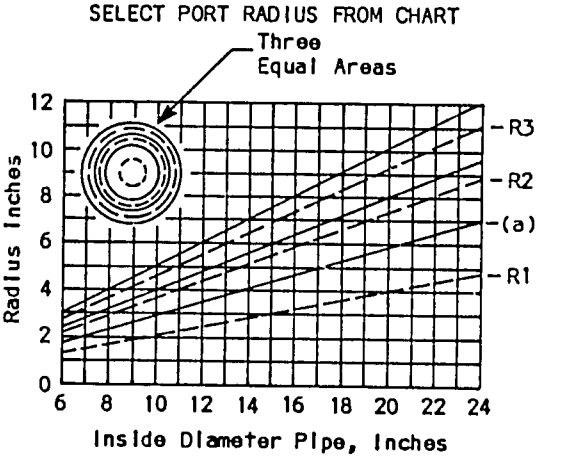

(a) Division Circle
(R1), (R2) & (R3) Port Circle

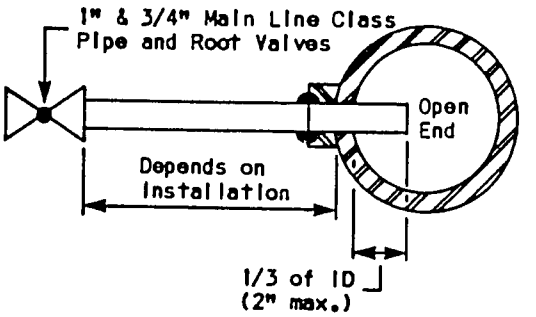

LIQUID SAMPLE NOZZLE

NOTES:

1. L = pipe ID minus 1/4".
2. L = 1/2 pipe ID minus 1/4".
3. All sample nozzle/wells will be checked for limitation of maximum length by performing the frequency and stress caclulations per ASME Performance Test Code 19.3-1974 "Part 3 Temperature Measurement."
4. A = pipe wall plus 3 3/8".
5. Refer [redacted] FIGURE D for Installation.

NOTES: (continued)

6. Nozzle Port and Bore Calculations for Isokenetic Sample.

*d = Diameter of Ports = $\sqrt{\frac{a}{0.7854N}}$ = in.

b = Diameter of Nozzle Bore = $\sqrt{\frac{3a}{1.5708}}$ = in.

a = Total Port Area = $\frac{Af}{F}$ = in.^{2}

A = Traverse Area of Pipe = 0.7854 x (Pipe ID)^2 = in.^{2}

f = Flow Rate of Total Sample Extracted = lb/hr

F = Flow Rate of Fluid Through Pipe = lb/hr

N - Total Number of Ports

*Minimum Port Dia. = 0.0625

ATTACHMENT 6

VENDOR DATA SUMMARY SHEET FOR

BOILER FEEDWATER
CLASS 1501 CS

1. Vendor's required submittal date of Purchaser's Engineer's drawings to insure delivery date of

2. Pipe Material: _____

3. Pipe Dimensions:

Minimum I.D.					
OD	_____	_____	_____	_____	_____
Minimum Wall	_____	_____	_____	_____	_____
Nominal Wall	_____	_____	_____	_____	_____

4. Field Welds:

	Quantity	Location(s)
OD	_____	_____
OD	_____	_____
OD	_____	_____

5. (A description of the method(s) of manufacture and fabrication.)

6. (A description of the method of making shop welds.)

7. (A description of pipe cleaning methods.)

8. (A description of the packaging and shipping procedures.)

9. (A chart detailing the Vendor's scope of supply for steel used in pipe hanging.)

ATTACHMENT 6

VENDOR DATA SUMMARY SHEET FOR

MAIN STEAM
CLASS 2501 AS

1. Vendor's required submittal date of Purchaser's Engineer's drawings to insure delivery date of

2. Pipe Material: _____

3. Pipe Dimensions:

Minimum I.D.					
OD	_____	_____	_____	_____	_____
Minimum Wall	_____	_____	_____	_____	_____
Nominal Wall	_____	_____	_____	_____	_____

4. Field Welds:

	Quantity	Location(s)
OD	_____	_____
OD	_____	_____
OD	_____	_____

5. (A description of the method(s) of manufacture and fabrication.)

6. (A description of the method of making shop welds.)

7. (A description of pipe cleaning methods.)

8. (A description of the packaging and shipping procedures.)

9. (A chart detailing the Vendor's scope of supply for steel used in pipe hanging.)

ATTACHMENT 6

VENDOR DATA SUMMARY SHEET FOR

HOT REHEAT
CLASS 1501 AS

1. Vendor's required submittal date of Purchaser's Engineer's drawings to insure delivery date of

2. Pipe Material: _____

3. Pipe Dimensions:

Minimum I.D.					
OD	_____	_____	_____	_____	_____
Minimum Wall	_____	_____	_____	_____	_____
Nominal Wall	_____	_____	_____	_____	_____

4. Field Welds:

	Quantity	Location(s)
OD	_____	_____
OD	_____	_____
OD	_____	_____

5. (A description of the method(s) of manufacture and fabrication.)

6. (A description of the method of making shop welds.)

7. (A description of pipe cleaning methods.)

8. (A description of the packaging and shipping procedures.)

9. (A chart detailing the Vendor's scope of supply for steel used in pipe hanging.)

ATTACHMENT 6

VENDOR DATA SUMMARY SHEET FOR

COLD REHEAT
CLASS 601 CS

1. Vendor's required submittal date of Purchaser's Engineer's drawings to insure delivery date of

2. Pipe Material: _____

3. Pipe Dimensions:

Minimum I.D.					
OD	_____	_____	_____	_____	_____
Minimum Wall	_____	_____	_____	_____	_____
Nominal Wall	_____	_____	_____	_____	_____

4. Field Welds:

	Quantity	Location(s)
OD	_____	_____
OD	_____	_____
OD	_____	_____

5. (A description of the method(s) of manufacture and fabrication.)

6. (A description of the method of making shop welds.)

7. (A description of pipe cleaning methods.)

8. (A description of the packaging and shipping procedures.)

9. (A chart detailing the Vendor's scope of supply for steel used in pipe hanging.)

LAKHRA POWER FEASIBILITY STUDY

SPECIFICATION M-14

FLY ASH HANDLING SYSTEM

(VACUUM TYPE)

SPECIFICATION M-14

FLY ASH HANDLING SYSTEM
(VACUUM TYPE)

TABLE OF CONTENTS

Item	Title	Page
1.0	DESCRIPTION OF WORK	1
2.0	WORK INCLUDED	1
3.0	WORK NOT INCLUDED	2
4.0	APPLICABLE CODES AND STANDARDS	3
5.0	SUPPLEMENTAL DATA	5
6.0	VENDOR DATA	7
7.0	DESIGN REQUIREMENTS	8
8.0	PERFORMANCE REQUIREMENTS	17
9.0	MATERIAL REQUIREMENTS	18
10.0	FABRICATION AND ASSEMBLY REQUIREMENTS	18
11.0	INSTALLATION REQUIREMENTS (NONE)	18
12.0	PERSONNEL REQUIREMENTS	18
13.0	INSPECTION AND TESTS	18
14.0	CLEANING, CORROSION PROTECTION AND COATING	20
15.0	IDENTIFICATION AND MARKING	20
16.0	PACKAGING, SHIPPING, AND STORAGE	21
17.0	ACCEPTANCE CRITERIA	22

ATTACHMENTS

1. MOTOR SPECIFICATION
2. MOTOR DATA SHEETS
3. DESIGN DATA SHEET
4. SUMMARY DATA SHEETS
5. ACOUSTIC DATA SUMMARY SHEET

LAKHRA POWER FEASIBILITY STUDY
TECHNICAL SPECIFICATION M-14
FLY ASH HANDLING SYSTEM
(VACUUM TYPE)

1.0 DESCRIPTION OF WORK

The work to be performed consists of furnishing and delivering to the jobsite a complete vacuum type fly ash handling system to serve two 350 MW power plants for the Water and Power Development Authority (WAPDA) to be located in Pakistan.

2.0 WORK INCLUDED

The work to be performed shall include but not be limited to the following:

2.1 Hydraulic exhausters each with a separator.

2.2 Two pulse jet type bag filters with dump gates and controls.

2.3 Two primary and/or secondary cyclone collectors, if required by the Vendor's system, with controls and any associated piping and valves. (Note: The Specification as written, describes the design of a system including both a primary and a secondary collector. The Vendor shall have the option of omitting one or both cyclone collectors if doing so will not diminish the performance and reliability of the system.)

2.4 Manually operated ash hopper isolation slide gates.

2.5 Pneumatically operated ash segregating valves.

2.6 All piping, valves, fittings, and expansion joints required to transport fly ash from the precipitator and economizer hoppers to the fly ash storage silo. These shall include but not be limited to the following:

a. Wear resistant conveying pipe from the dust collector hoppers to the bag filter and from the hydraulic exhausters to the air separator.

b. Silo bypass piping and bag filter bypass piping.

c. Ash intake valves (hopper valves with pneumatic operators, branch line air intake valves and vacuum relief valves as required.

d. Branch line segregating valves and pneumatic operators.

e. Manual isolation gate valves primary and secondary collector bypass and bag filter bypass.

f. All flanges, gaskets and bolting required to completely erect the system.

g. Redundant piping main runs from precipitator, air heater, and economizer to silo.

2.7 Hopper fluidizing air blowers and accessories.

2.8 Silo and silo outlet hopper fluidizing stones and mounts.

2.9 Hopper fluidizing air heaters and controls.

2.10 Two ash silo outlet hoppers with hood and accessories.

2.11 Silo pressure/vacuum relief valve.

2.12 Silo level indicator.

2.13 Instrumentation, controls and alarms as specified herein to adequately operate and project the system.

2.14 CONTROL PANELS

a. One main control panel for operation, monitoring and annunciation of the fly ash transport system, ash water booster pumps, precipitator hopper fluidizing air system, ash silo dust collectors and isolation valves, to be located in plant main control room.

b. One control panel in the ash silo unloader room for operation, monitoring and annunciation of the ash silo fluidizing air system.

2.15 Technical assistance required to install, adjust, and start up the system, including training of the Owner's operators.

3.0 WORK NOT INCLUDED

The following items are not included in the requirements of this specification and will be performed by others:

3.1 Foundations, anchor bolts, and grout work.

2/6

3.2 Pipe hangers and supports.

3.3 Water supply including piping, to the hydraulic exhausters.

3.4 Air vent, drain, and overflow piping from the air separator.

3.5 Fluidizing air piping and insulation.

3.6 Ash hopper fluidizing diffusers and hopper heaters.

3.7 Compressed air supply and piping.

3.8 Electric power supply field control wiring and conduit, and electric power supply for system control panels. Electric power available is 400 volts, 3 phase, 50 hertz and 220 volts, 1 phase, 50 hertz.

3.9 Two fly ash storage silos.

3.10 Fly ash silo unloaders.

3.11 Installation of equipment.

4.0 APPLICABLE CODES AND STANDARDS

The following codes and standards are applicable to the work to the extent specified:

4.1 American National Standards Institute (ANSI) Standards

4.1.1	ANSI B16.5	Steel Pipe Flanges and Flanged Fittings
4.1.2	ANSI B31.1	Power Piping Code
4.1.3	ANSI C51.1	Safety Standard for Construction and Guide for Selection, Installation, and Use of Electric Motors and Generators (NEMA Pub. No. MG2)
4.1.4	ANSI 52.14	Polyphase Induction Motors for Power Generating Stations
4.1.5	ANSI S1.2.	Method for Physical Measurement of Sound

4.2 American Welding Society (AWS)

4.2.1	D1.1	Structural Welding Code

4.3 Institute of Electrical and Electronic Engineers (IEEE)

4.3.1 IEEE 1 General Principles for Temperature Limits in the Rating of Electric Equipment

4.3.2 IEEE 85 IEEE Test Procedure for Airborne Sound Measurements on Rotating Electric Machinery

4.3.3 IEEE 429 Evaluation of Sealed Insulation Systems for AC Electric Machinery Employing Form Wound Station Coils

4.4 INSTRUMENT SOCIETY OF AMERICA (ISA)

4.4.1 ISA RP8.1 Specification and Guides for Use of General Annunciators

4.5 OCCUPATIONAL SAFETY AND HEALTH ACT (OSHA)

National Electrical Manufacturers Association

NEMA MG-1 Motors and Generators

NEMA MG-2 Safety Standard for Construction and Guide for Selection, Installation and Use of Electric Motors and Generators

4.6 AMERICAN SOCIETY OF MECHANICAL ENGINEERS (ASME)

4.6.1 ASME Boiler and Pressure Vessel Code, Section VIII

4.6.2 ASME Boiler and Pressure Vessel Code, Section IX

4.7 Application of codes and standards referenced herein requires the application of the latest issue date and of all addenda adopted as of the date of the purchase order. Later revisions may be invoked only by mutual agreement between Purchaser and Vendor.

5.0 SUPPLEMENTAL DATA

5.1 COAL/FLY ASH ANALYSES

SHORT PROXIMATE

Daily Basis	Typical	Range
GCV-(Dry) Btu/lb	7500	6300 - 8700
Ash-(Dry) %	36.0	26.0 - 46.0
Sulfur-(Dry) %	7.4	6.5 - 9.5
H_2O %	32.0	25 - 45
Monthly Basis		
GCV-(Dry) Btu/lb	7500	6900 - 8100
Ash-(Dry) %	36.0	30.0 - 42.0
Sulfur-(Dry) %	7.4	6.8 - 8.3
H_2O %	32.0	28.0 - 40.0

PROXIMATE ANALYSIS
(Dry Basis)

	Typical	Range
Ash (%)	36.00	26.17 - 41.87
VM (%)	34.60	32.15 - 39.58
FC (%)	29.40	23.68 - 35.82
Total	100.00	- - -
Sulfur (%)	7.26	6.02 - 9.85
GCV-(Btu/lb)	7500	6060 - 8950
Equilb. Moisture (%)	38.91	33.77 - 50.06
Forms of Sulfur		
Total	7.71	6.02 - 9.85
Pyritic	4.14	2.89 - 5.51
Sulfate	0.60	0.31 - 1.56
Organic	2.97	1.43 - 3.86

ULTIMATE ANALYSIS

	Typical (% As Fired)	Range (% Dry Basis)		
H_2O	32.00	-	-	-
Ash	24.48	36.00	26.17 -	41.87
H_2	2.12	3.12	2.76 -	3.66
C	29.12	42.82	35.61 -	50.75
N_2	0.55	0.81	0.66 -	1.08
S	4.94	7.26	6.02 -	9.85
O_2	6.79	9.99	9.69 -	12.84
TOTAL	100.00	100.00	-	-
GCV-(Btu/lb)	5100	7500	6300 -	8700
Chlorine	-	0.14	0.10 -	0.19
Water Soluble				
Chlorine	-	0.11	0.04 -	0.16
Potassium Oxide	-	0.018	0.011 -	0.024
Sodium Oxide	-	0.253	0.092 -	0.917
Total Alkalies	-	0.231	0.104 -	0.363

MINERAL ANALYSIS
(% Ignited Basis)

	Typical	Range		
SiO_2	39.60	-	32.34 -	47.68
Al_2O_3	20.17	-	12.12 -	26.30
TiO_2	2.02	-	1.33 -	3.16
CaO	3.70	-	2.11 -	8.39
K_2O	0.61	-	0.45 -	0.76
MgO	1.60	-	0.79 -	2.54
Na_2O	0.72	-	0.32 -	1.02
Fe_2O_3	24.64	-	17.02 -	33.60
P_2O_5	0.75	-	0.56 -	0.93
SO_3	5.63	-	2.20 -	10.55
Undetermined	0.56	-	- -	-
Phosphorus % Dry Basis	0.105	-	0.076 -	0.143
Slag Viscosity (T250)°F	-	-	2200 -	2530

6.0 VENDOR DATA

6.1 Vendor data shall be furnished in accordance with the requirements indicated on the attached Vendor Data Requirements and Submittal Schedule.

6.2 Vendor shall furnish certified vendor drawings, and include a list of drawings by category, such as general arrangement, foundation data, and electrical connection. If titles of the certified vendor drawings are unknown, bidder shall submit the estimated number of drawings he will submit in each category.

6.3 The Vendor shall provide (No.) copies of an instruction book covering all equipment being furnished. The instruction book shall have hard front and back covers and have proper identification on the front cover as to contents.

6.4 Instruction books are not considered design manuals, and if any discrepancies arise between the Vendor's drawings and instruction books or items omitted from the drawings which are contained in the instruction book recommendations, the Vendor shall amend the instruction books or shall modify the installation at his own expense, whichever is deemed by the Owner as giving the most proper and operative final installation.

6.5 PERFORMANCE TEST REPORTS AND CERTIFICATIONS

The following performance reports and certifications shall be submitted to the Owner prior to acceptance of the Work:

1. Certified copies of all shop test data shall be forwarded to the Engineer for later distribution to the Owner.

2. The Vendor shall furnish procedures and instructions for all field installation and all required start-up tests and instruction books for the equipment being furnished.

6.6 SPECIAL TOOLS AND SPARE PARTS

6.6.1 The Vendor shall supply the following:

One set of any special tools required to operate and maintain his equipment. All tools shall be identified by name and number, and this number shall appear on drawings and instructions to indicate the application of the tools furnished and to permit the ordering of replacement tools.

6.6.2 The Vendor shall supply, with his proposal, pricing for 1 and 5 year supplies of spare parts.

7.0 DESIGN REQUIREMENTS

The fly ash handling system shall be designed to operate under the following conditions and have the following features:

7.1 GENERAL

7.1.2 The fly ash handling system shall be arranged generally as shown on the following arrangement drawings (later):

7.1.3 The fly ash system shall be designed in accordance with the attached Design Data Sheet, Attachment 3.

7.1.4 The system shall be of the dry vacuum type. The dry fly ash is fed from the various hoppers into an ash transport piping network. The vacuum shall be induced by a hydraulic exhauster. The vacuum system shall convey the fly ash from the dust collector hoppers to the ash storage silo. The fly ash will be separated at the silo by a cyclone separator and a bag filter. The ash will be discharged into the silo and the remaining air flows to the suction side of the hydraulic exhauster. In a secondary operating mode the silo or bag filter will be bypassed and ash will be conveyed to the hydraulic exhauster. The design of the system shall allow for the future use of a mechanical exhauster as a vacuum source.

7.1.5 The hydraulic exhauster shall be designed to handle the solid material entrained in the conveying air stream and shall be fabricated of wear resistant material. Nozzles in the hydraulic exhausters shall be replaceable and accessible through one or more hand-holes. Nozzles shall be tungsten carbide lined.

7.1.6 The air separator tank shall be furnished with abrasion resistant wear sections where inlet slurry impinges on the air separator wall.

7.1.7 The fly ash shall be collected from (No. later) precipitator hoppers, (No. later) economizer hoppers and (No. later) air heater hoppers.

7.1.8 The fly ash vacuum piping shall be arranged with one branch per precipitator field. Each branch shall have a spring loaded air intake valve to admit air for transport of the fly ash. Each branch shall have a solenoid controlled penumaticlly operated conveyor line branch segregating valve, with provisions for manual operation in the event of loss of control signal.

7.1.9 Each hopper shall be provided with a solenoid controlled penumatically operated fly ash intake valve and a manually operated

emergency slide gate valve. The emergency slide gate valves shall be located between the hopper flange and the fly ash intake valve. The valves shall be compatible with a 300mm (12 inch) ASA 150 pound flat face hopper flange. The fly ash intake valves shall have provisions for manual operation in the evenbt of loss of control signal. The fly ash intake valves shall be shop assembled.

7.1.10 The Vendor shall furnish a filter in the instrument air supply to each pneumatically operated valve. If lubricated air is required, the Vendor shall furnish an oiler for each penumatic operator. A filter regulator shall be furnished with each pneumatically operated valve, if required for operation of the valve with the air supply pressure supplied as indicated in Attachment 3. Each filter or filter regulator (and oiler, if required) shall be shop mounted and connected to its respective valve.

7.1.11 Piping and manual valves shall be provided to bypass and isolate either the silo or the bag filter.

7.1.12 All fly ash conveying piping including piping from the hydraulic exhauster to the air separator shall be made of a material specially designed to resist the abrasive action of the fly ash. All conveyor line fittings and valves shall also be made of abrasion resistant material. All elbows and fittings shall have replaceable wear backs. Connectors for the conveying line shall securely lock the lengths of pipe together and effectively eliminate air infiltration into the transport piping at the joints. Expansion joints shall be provided to accomodate pipeline expansion and hopper movement. Any pipe ties required shall be furnished by the Vendor. Cleanouts shall be furnished shall be furnished by the Vendor. Pipe sections shall be of a length to facilitate easy replacement of worn sections and shall utilize mechanical joints.

7.1.13 There shall be no physical restrictions between the precipitator outlet and the primary collector inlet which are smaller than the ash hopper valve throat opening.

7.1.14 Fly ash temperature in the precipitator hoppers will be 95°C to 205°C (200°F to 400°F). Fly ash temperature in the economizer hoppers will be 260°C - 430°C (500°F to 800°F).

7.1.15 The fly ash system collecting equipment shall consist of a primary collector and a bag filter. The bag filter shall be located immediately downstream of the primary collector and shall be located on the silo roof. The bag filter shall dump without re-entrainment of collected ash. The dumping mechanism

and openings on the collector and bag filter shall be as large as is practical to reduce plugging problems. the primary collector shall have inspection doors of adequate size to permit removal of any internal parts for repair or replacement. Inspection doors shall have hinges and wing nuts. Bidders shall submit with their proposals, a recommendation for performing maintenance on the lower dump gate without removing the silo from service. The Vendor shall propose with his Base Bid either a continuous or intermittent collecting system and shall submit, with his proposal, an explanation to justify his selection.

7.2 BAG FILTER

7.2.1 The conveyor shall have a fabric type bag filter located between the primary collector and the vacuum producer. The bag filter shall collect dust carry-over from the mechanical collectors. Maximum air to cloth ratio shall be 3.5:1. Bag cleaning shall be accomplished by automatically pulsing the bags with compressed air. Compressed air 0-690 kPa (0-100 psi) for bag cleaning will be supplied by others.

7.2.2 Maintenance and bag removal shall be done from the top portion of the bag filter. The bag filter shall be of a design which minimizes the down time and effort required to change bags and perform routine maintenance. The method of bag attachment shall ensure secure bag retention, minimize leakage and protect the bags from abrasion. The Vendor shall provide an illustration of the bag attachment method with the Proposal.

7.2.3 Construction of the bag filter and collectors shall withstand maximum air temperatures of 135°C (275°F) and shall not be constructed of any combustible materials. The bag filter shall have hinged access doors(s) and inspection ports to allow repair.

7.2.4 Ash silo outlet hoppers with hoods shall be provided for installation at the bottom of each of the two Owner furnished ash silos. Each hopper shall be furnished with one outlet flange. The outlet flange shall be equipped with a manually operated isolation valves and pneumatically operated ash admission valve. The outlets shall be connected to the Owner furnished ash conditioning unloader.

7.3 SILO ACCESSORIES

7.3.1 The Vendor shall furnish an ash silo fluidizing air system to provide fluidizing air to the ash silo fluidizing stones and ash silo hopper fluidizing stones for each ash silo. The Vendor shall provide for each silo ash silo fluidizing blowers

with electric motors. Each blower shall be sized to provide the fluidizing air required by the ash silo and ash silo outlet hopper. The Vendor shall provide all filters, expansion joints, snubbers, silencers, valves and instruments and controls for the ash silo fluidizing blowers. The Vendor shall furnish all fludizing stones and mounts required for the ash silo and ash silo outlet hoppers. The Vendor shall supply one fluidizing air electric heater per fluidizing air blower. Each electric heater shall be capable of heating fluidizing air from 5°C (42°F) to 150°C (300°F) at the fly ash hoppers. Allowance shall be made in the heater capacity to compensate for heat losses in the piping from the heaters to the hoppers. Piping and insulation shall be furnished by others.

7.3.2 The Vendor shall furnish one silo vent filter for each silo suitable for venting and filtering air displaced by dust deposited into the silo and by fluidizing air introduced to the silo.

7.3.3 The Vendor shall furnish one relief valve for each silo designed to relieve pressure in the silo. It will be mounted on the silo roof.

7.3.4 The Vendor shall furnish four silo ash level detectors for each silo, one for each of the quarter points with indication on the fly ash tranport system control panel and on the silo unloader room control panel. A separate high silo level detector shall be provided for alarm on both these panels.

7.3.5 All items of equipment shall be shop assembled to the greatest extent possible.

7.4 CONVEYING SYSTEM CONTROLS

7.4.1 The Vendor shall furnish a main fly ash control panel for each unit housing the conveying system controls. The panel shall consist of an electro-mechanical controller, selector switches, time delay relays, vacuum indicators, vacuum recorder, pressure indicators, manual switches, indicating lights, mimic panel and miscellaneous equipment necessary for automatic or manual control of the fly ash system. All lights indicating the position of equipment shall be controlled by limit switches mounted on the device and not signals generated by the controller. If limit switch contacts are required as an input to the controller as well as for panel lights, separate contacts of the same switch shall be utilized. The system mimic on the main panel shall have position lights and operating lights for all applicable system equipment. The color and designation shall be as follows:

Color & Position	Signifies
Red - Right of CS Center	Breaker closed, motor on, valve or damper open, start, increase.
Green - Left of CS Center	Breaker open, motor off, valve or damper closed, stop, trip, decrease.

Color & Position	Signifies
Amber (When Used)	Breaker tripped, remote, overload or abnormal condition.
White (When Used)	Breaker - Condition normal permissive or limit position or condition reached.

7.4.2 The controller shall operate in either an "Automatic" mode or "Manual" mode. In the "Automatic" mode, the controller shall empty the hopper in the order dictated by the program. The controller shall be able to skip hoppers or groups of hoppers. In the "Manual" mode the controller shall empty the hopper which is selected by the operator. Upon being switched back to the "Automatic" mode the controller shall continue dumping the hopper being dumped before the interruption.

7.5 ANNUNCIATION SYSTEM

7.5.1 An annunciation system shall be provided for the ash tranport system mounted on the main fly ash control panel.

7.5.2 The annunciator shall have an isolated contact to signal the Owner's main control room annunciator system.

7.5.3 Each annunciator shall be self-contained and completely wired and tested at the factory so as to be ready for operation upon delivery. The annunciators shall be fabricated with labor compatible with the labor normally used in field handling and installation.

7.5.4 Annunciator audible and visual actions shall be as follows:

a.	Alarm Initiation	Fast flashing window and audible signal
b.	Alarm Acknowledge	Steady lighted window and audible signal silenced
c.	Condition Return to Normal	Slow flashing window
d.	Acknowledge Return to Normal	Lighted window extinguished

e. Reflash features shall be provided with local annunciators supplying input to the central control room annunciator.

f. Annunciator systems shall feature solid-state logic hardware.

7.5.5 Each annunciator shall be served by a nominal power supply of 125 volts dc but shall be capable of continuous operation at 130 volts dc with a minimum of 90 volts dc and for periods of 36 hours at 140 volts dc without damage. Circuiting shall be self-protecting for the occasional voltage spikes associated with station battery systems. The annunciator shall be of the solid state type such as the Riley Panalarm Series 70 or Electro-devices Electrostat type.

7.5.6 Each possible system malfunction shall be alarmed on the annunciator. Alarm conditions shall include but not be limited to the following:

a. Bag Filter High Differential

b. Bag Filter Failure

c. Primary and Secondary Collector Dump Failure

d. Bag Filter Dump Failure

e. Primary and Secondary Collector OFF

f. Bag Filter OFF

g. Plugged Hopper

h. Exhauster Water Pressure Low

i. Conveying Complete

j. Fly Ash Silo Level High

k. Bag Filter Level High

7.5.7 Vacuum producter failure shall cause all dust valves to close, thus shutting off all flow of ash into the system.

7.5.8 The design of the controls incorporated into the panel shall accommodate remote location of the panel from the ash system. The panel will be located in the plant main control room. Field wiring between the control panel and controlled equipment will be furnished by the Owner.

7.5.9 The control panels shall be free standing with all control devices mounted at a convenient height for use by standing operators. The control panels shall be in a NEMA Type 12 enclosure. If ventilation is required, the Vendor shall supply a ventilating fan and filter designed to pressurize the cabinet to a slight positive pressure. The controls shall be designed to operate with ambient temperature of 10° to $55^{o}C$ (50° to $130^{o}F$) and relative humidity of 10 to 100 percent. The control equipment electrical supply will be 230 volt, single phase, 50 hertz. The panel shall include lighting and convenience receptacles.

7.5.10 The control panels shall be completely shop fabricated with labor compatible with that labor normally used in field handling and installation and shall be assembled with all internal wiring as required with terminal points properly identified for field connection at the top by the Owner. The panels shall be designed to accept either top or bottom field cable entry.

7.5.11 Components shall be arranged to ensure good accessibility to individual devices and terminals to allow connecting external circuits and for servicing.

The panels' front shall be made of 6mm (1/4 inch) thick hot rolled steel, pickled and select smooth stock. All other panel areas shall be of the same type steel 3mm (1/8 inch) thick. Construction shall be absolutely rigid, corners shall be smooth radii, face joints shall be welded and ground smooth and flush. The panels shall have back mounted doors with two or three point vault type latches. Bolts shall be hexhead.

7.5.12 The internal surfaces of the panels shall be cleaned with solvent and painted with at least one coat of primer and one coat of white enamel. Exterior surfaces shall be sand blasted all over, filled and sanded as required, and painted with at least one coat of primer and two coats of paint.

7.5.13 The panels shall be furnished with switches each with red and green indicator lights and nameplates for the following equipment.

Equipment	Switch Type
Ash Water Booster Pump A	"ON/OFF/AUTO"
Ash Water Booster Pump B	"ON/OFF/AUTO"
Fluidizing Air Blower A	"ON/OFF/STANDBY"
Fluidizing Air Blower B	"ON/OFF/STANDBY"
Fluidizing Air Heater A	"ON/OFF/STANDBY"
Fluidizing Air Heater B	"ON/OFF/STANDBY"

7.5.14 Indicating lights shall be green and red, left and right, respectively, when viewed facing the front of the panel.

7.5.15 Extra space shall be alloted on the panel for future incorporation of controls for two full capacity vacuum pumps to be used as the system vacuum source.

The mimic busses and process lines shall be constructed of 1.6mm (1/16 inch) thick and 9.5mm (3/8 inch) wide, square edge, satin surfaced lamicoid or Owner's Engineer approved equal plastic strips. The strips shall be permanently affixed using Goodyear Pliobond adhesive or Owner's Engineer approved equal.

7.5.16 All indicating lights shall be energized from 230 volt ac or 125 volt dc. The lamps of the indicating lights shall be for low-voltage operation and the voltage dropping resistor for application to the particular source shall be mounted integrally with the indicating light assembly.

7.5.17 Control Switches and Control Devices

7.5.17.1 The following control functions in relation to position of control device shall apply to the use of pushbuttons, maintained position control switches, or spring return to center control switches.

Left	Center (If Used)	Right
Off	Auto	On
Stop	Neutral	Start
Trip Breaker		Close Brk.
Close Valve		Open Valve
Decrease		Increase
Lockout (Pull)		

7.5.17.2 Pushbutton controls shall use a red colored button for stop, trip or off functions, and black or any other color for other functions.

7.5.17.3 The Vendor shall supply secondary current transformers and register in the fly ash handling equipment control panel for the motor overload control operation. All instrument and annunciator points that are recommended by the Vendor and this Specification shall be flush mounted on the control panel.

7.6 WIRING

7.6.1 Wiring shall be complete with all control, instrument, and alarm circuits requiring external connections brought to terminal blocks conveniently located for Purchaser's connections. Extra flexible wire shall be used across all hinged joints.

7.6.2 Wire shall be single conductor, stranded, soft drawn copper, No. 14 AWG minimum except for low energy instrument circuitry which shall be No. 18 AWG minimum. Insulation shall be 600 volt, Type SIS, rated 90°C conductor temperature, capable of passing the IPCEA flame resisting test, IPCEA Pub. S-61-402, Section 6.5.

7.6.3 Each wire shall be identified at both ends with "Perma- Shield" Mylar white wire markers or Purchasers Engineer's approved equal, inscribed with wire numbers shown on the Vendor's diagrams.

7.6.4 Terminations shall be made with solderless ring-tongue compression type connectors. Burndy "Hylug," Type YAV for No. 9 AQG and smaller, and Type YA-L for larger wires, or equivalent amp connectors or Purchasers Engineer's approved equal.

7.6.5 Control wiring shall be run in grounded control wire trough or cabled groupings shall be effectively shielded from all high voltages.

7.6.6 Terminal blocks shall be 600 volts with sliding link connectors, hinged marking strip and individual white marking tags. The terminal links shall be arranged so that they drop open when loosened if blocks are mounted horizontally. A minimum of 15 percent spare terminal points shall be provided. Non-disconnecting terminal blocks may be used for Vendor's internal wiring cross-connections.

7.7 ACOUSTIC REQUIREMENTS

7.7.1 The Vendor shall submit as part of his Proposal a tabulation of octave band sound power levels in accordance with 7.7.2

below for the equipment being quoted without acoustic treatment or guarantee. The Proposal will be considered incomplete without this information.

7.7.2 The Vendor shall submit as part of his Proposal an additional price for a guaranteed maximum sound level of 90 dBA (90 decibels, A network weighted) when measured with a Type I precision sound level meter at slow response and at a distance of 1 meter (3 feet) in any direction from the nearest surface of the equipment. The Vendor shall also submit with his Proposal a tabulation of octave band sound levels in accordance with 7.73 below for the equipment in the sound attenuated condition.

7.7.3 The Vendor shall complete and submit as part of his Proposal the attached Acoustic Data Summary Sheet. It is preferred that the octave band levels be sound power levels in decibels with a reference power of 10 (exponent -12) watt. However, sound pressure levels in decibels with a reference pressure of 0.0002 microbars will be acceptable providing the weighting network and distance to the sound source are indicated. In the event acoustic data for similar equipment will be acceptable. However, the equipment differences should be indicated and the Vendor's estimate of the acoustical effect of these differences should be indicated.

7.7.4 The maximum sound power or sound pressure levels will be verified by measurements at the installation site at the Purchaser's discretion. The Purchaser's Engineer will perform these requested tests in accordance with standard test procedures as applicable to the particular installation or type of equipment.

7.7.5 Where no specific testing procedure is applicable, verification tests shall be conducted in accordance with the following:

7.7.5.1 Institute of Electrical and Electronics Engineers (IEEE) Standard 85, "IEEE Test Procedure for Airborne Sound Measurements on Rotating Electric Machinery."

7.7.5.2 American National Standards Institute (ANSI) S1.2, "Method for the Physical Measurement of Sound."

8.0 PERFORMANCE REQUIREMENTS

The fly ash handling system when installed and operating shall meet or exceed the following requirements:

8.1 The fly ash handling system shall have a minimum capacity of 72.5 tonnes (80 tons) per hour of dry free-flowing fly ash. The system shall be capable of emptying all hoppers in 4 hours of each 8 hours.

8.2 The fluidizing air system shall be capable of heating fluidizing air from 5°C (42°F) to 150°C (300°F) at the fly ash hoppers.

8.3 The capacity of the fly ash handling system and fluidizing air system shall be guaranteed.

8.4 The equipment furnished under this specification shall be guaranteed as to materials and performance for 1 year following satisfactory operation. Any defect which may appear in the equipment during that period because of faulty design, workmanship, or material shall be repaired or replaced by the Vendor without additional cost to the Purchaser. Such repair shall be warranted for 1 year from the date of satisfactory repair.

9.0 MATERIAL REQUIREMENTS

9.1 Fly ash transport piping shall be abrasion resistant cast iron or Schedule 40 carbon steel as specified.

9.2 Ash transport piping fittings shall be abrasion resistant cast iron with a minimum BHN of 400.

9.3 All material used shall be in accordance with the latest ASTM standards.

10.0 FABRICATION AND ASSEMBLY REQUIREMENTS

The Vendor shall employ his standard procedure in fabrication and assembly.

11.0 INSTALLATION REQUIREMENTS

None

12.0 PERSONNEL REQUIREMENTS

12.1 All work shall be performed by personnel competent to execute the work assigned.

12.2 Personnel for the technical assistance of installation, start-up, and operator training shall be technically competent.

13.0 INSPECTIONS AND TESTS

13.1 The Owner's representative shall have free access to the supplier's manufacturing plant during the period of fabrication. The Owner's representative shall have the authority to witness non-destructive tests on the equipment by qualified Vendor

Representatives and shall have authority to reject any faulty material.

13.2 All control panels shall be subjected to a high potential test in accordance with NEMA ICSI-109 "Test and Test Procedures," Table 3.

13.3 The Vendor shall furnish the Owner with triplicate certified copies of all tests made at the factory prior to shipment of the equipment.

13.4 SYSTEM ACCEPTANCE TEST

13.4.1 Within 180 days after start-up of the fly ash handling system, the Owner will conduct a performance test following the procedure outlined below or as mutually agreed upon between the Owner and the Vendor. Acceptance of this test by the Owner will constitute acceptance of the system as meeting guaranteed conditions.

13.4.2 Fly Ash Handling System Capacity Test

The following procedure is suggested for testing the fly ash system by a simple but fairly accurate method:

13.4.2.1 Check that the conveyor is operating properly and there is no leakage present.

13.4.2.2 Allow fly ash to accumulate in precipitator hoppers for 6 hours minimum at full load.

13.4.2.3 Empty the ash silo as much as possible using the dry unloading spout.

13.4.2.4 Start the fly ash handling system and note time of starting.

13.4.2.5 Convey ash through one or more complete cycles and note time of shutdown. If more than one cycle is included in the test, the unit should be operated at full load during the entire test period.

13.4.2.6 Empty the silo as much as possible using unloader and weigh the fly ash removed.

13.4.2.7 Divide the weight of ash collected by the conveying time in hours. The result will be the average conveying rate of the system.

13.4.2.8 The fly ash handling system supplier should have a representative present during the test.

14.0 CLEANING, CORROSION PROTECTION AND COATING

14.1 All equipment shall be clean and free of rust, scale, and oil.

14.2 All foreign material shall be removed from the interior of equipment before shipment.

14.3 All metal surfaces shall be cleaned and prepared in accordance with the Vendor's standards prior to shop coating.

14.4 Immediately after cleaning, all metal surfaces including all piping and fittings shall be shop coated in accordance with Vendor's standard practices for the temperature ranges involved. Shop coating shall conform to the paint manufacturer's recommendations.

14.5 Following the prime coat, the control panel and cabinet shall be given two coats of enamel paint in accordance with the Vendor's standard practices.

15.0 IDENTIFICATION AND MARKING

15.1 Each package, skid, box and crate shall be marked on the outside with the following information so that it is readily visible:

a. (Owner's name)
(Project identification)
(Address)
(City, state, zip code)

b. Purchase Order Number

c. Weight:

d. Equipment Nos. as applicable:

15.2 Each unit shall be identified with a tag number. The number shall be permanently imprinted with at least 5mm (3/16") high letters on a 22 gage stainless steel tag. The tag shall be attached to the enclosure with pins of a similar material.

15.3 Each unit shall have a permanently secured data plate made from at least 22 gage stainless steel, permanently imprinted with 5mm (3/16") high letters, and containing the following information:

a. Manufacturer's name and address:

b. Model Number:

c. Serial Number:

d. Date of Manufacture:

e. Duty:

f. Weight:

15.4 The data plate shall be located where it is readily visible and shall be securely attached with pins of a material similar to the plate.

15.5 Equipment item numbers shall be utilized by the Vendor in designating equipment. Numbers so assigned by the Vendor may be reassigned at the option of the Engineer.

15.6 Items furnished under these specifications, but not identified herein, shall have tags inscribed as directed by the Engineer.

16.0 PACKAGING, SHIPPING AND STORAGE

16.1 All items shall be adequately crated, wrapped or otherwise protected so that shipment and delivery may be made without damage.

16.2 All flanges shall be protected by bolted-on wooden covers and all threaded openings shall be closed with caps or plugs.

16.3 A list and description of the contained material shall be plainly marked on the outside of each shipping container. All individual items shall be tagged.

16.4 Bolts, nuts, fittings and other small parts shall be separately boxed or packaged for shipment and properly tagged and identified.

16.5 Three copies of packing lists and shipping memoranda (special handling requirements, storage instructions, etc.) shall be mailed via international courier forty-eight hours before shipment is made. Packing lists shall include Vendor's mark number and Owner's tag number. Copies of shipping papers shall be mailed via international courier as follows (later):

16.6 Unless otherwise specified by the Vendor, storage of the equipment shall be outdoors. The Vendor shall inform the Owner of

any special storage requirements sufficiently in advance of shipping of the equipment to allow for necessary preparation.

17.0 ACCEPTANCE CRITERIA

The Vendor shall comply with the following requirements before he submits the work for acceptance:

17.1 Submittal of all requested data.

17.2 Submittal of all test reports.

ATTACHMENT 1

Refer to Electrical Motor Specifications E-1 and E-2.

ATTACHMENT 2

Refer to Motor Data Sheets included in Electrical Motor Specifications E-1 and E-2.

ATTACHMENT 3

DESIGN DATA
FLY ASH HANDLING SYSTEM

Steam Generator Manufacturer	(later)
Type of Fuel	Pulverized Coal
Fuel Burned per unit tonnes/hr (tons/hr)	348 (384) (To be confirmed)
Ash Content of Fuel (%)	25
Fly Ash (%)	70
Maximum Design Temperature °C (°F)	204 (400)
Precipitator Ash Hoppers	
Number/Usable Capacity $m^3(ft^3)$/hopper	
- large	(later)
- small	(later)
Economizer Ash Hoppers	
Number/Usage Capacity ($m^3(ft^3)$/hopper)	(later)
Air Heater Hopper	
Number/Usage Capacity ($m^3(ft^3)$/hopper)	(later)
Approximate Conveying Distance (dry to silo) m (ft)	183 (600)
Grade Elevation m (ft)	40 (122)
Top of Owner's Storage Silo-Elevation m (ft) approximately	18 (60)
Design Ambient Air Temperature °C (°F)	(50) (122)
Barometric Pressure kPa (in Hg)	101 (29.8)

ATTACHMENT 4

FLY ASH HANDLING EQUIPMENT
SUMMARY DATA SHEETS

Vendor _____

Proposal Number _____

Proposal Date _____

System Capacity _____

Maximum total compressed air required by fly ash transport system, m^3/sec (scfm) _____

- Maximum compressed air pressure required, kPa (psig) _____
- Pickup velocity, m/s (fpm) _____
- Maximum velocity in pipe, m/s (fpm) _____
- Minimum velocity in pipe, m/s (fpm) _____

Primary Mechanical Collector

- Manufacturer/Model Number _____
- Continuous Operation, Yes or No _____
- Collector Height, m (ft) _____
- Collector Material and Thickness - mm (in) _____
- Capacity of Collector, m^3 (ft^3) _____
- Collector Efficiency, Percent _____
- Fluididizing air required, m^3/s @ kPa (scfm at psig) _____
- Dump Valve Size mm (in) _____

ATTACHMENT 4
(Continued)

Primary Mechanical Collector (cont'd.)

Dump Valve Acutator

Type _____

Air Requirement Std m^3/sec (scfm) _____

Duration of Stroke _____

Frequency of Stroke _____

Collector pressure Drop, kPa (in W.G.)

Maximum _____

Minimum _____

Normal _____

Weight (loaded), kg (lbs) _____

Extent of shop assembly _____

Secondary Mechanical Collector

Manufacturer/Model Number _____

Continuous Operation, Yes or No _____

Collector height, m (ft) _____

Collector Material and Thickness - mm (in) _____

Capacity of Collector, m^3 (ft^3) _____

Collector Efficiency, Percent _____

Fluidizing air required, m^3/sec @ kPa (cfm @ psi) _____

Dump Valve Size mm (in) _____

ATTACHMENT 4
(Continued)

Secondary Mechanical Collector (cont'd.)

Dump Valve Actuator

Type _____

Air Requirement Std m^3/sec (scfm) _____

Duration of Stroke _____

Frequency of Stroke _____

Collector Pressure Drop kPa (in W.G.)

Maximum _____

Minimum _____

Normal _____

Weight (loaded), kg (lbs) _____

Insulation and Heat Trace Required, Yes or No _____

Extent of shop assembly _____

Bag Filter _____

Manufacturer/Model Number _____

Continuous Operation, Yes or No _____

Type _____

Bag Filter height, m (ft) _____

Bag Filter Casing Material Thickness, mm (in) _____

Capacity of Hopper _____

Bag Filter Efficiency, Percent _____

Number of Bags _____

ATTACHMENT 4
(Continued)

Bag Filter (cont'd.)

Length of Bags mm (in) _____

Material of Bags _____

Diameter of Bags mm (in) _____

Air-to-Cloth Ratio _____

Cleaning Air Requirements - m^3/s-kPa (scfm - psig) _____

Dump Valve Size mm (in) _____

Dump Valve Actuator

Type _____

Air Requirement _____

Duration of Stroke _____

Frequency of Stroke _____

Collector Pressure Drop, kPa (in W.G.)

Maximum _____

Minimum _____

Normal _____

Design Inlet Dust Loading _____

Maximum Temperature ^{o}C (^{o}F) _____

Maximum Allowable Vacuum, kPa (in Hg) _____

Top bag removal, yes or No _____

Number of access hatches _____

Access Hatch Size mm (in) _____

ATTACHMENT 4
(Continued)

Bag Filter (cont'd.)

Weight Loaded kg (lbs)	_____
Insulation and Heat Trace Required Yes or No	_____
Extent of shop Assembly	Shop Assembled - Bags Installed in Field

Hydraulic Exhauster

Manufacturer/Model Number	_____
Nominal Size	
Motive Water Connection Size and Type	_____
Air Inlet Connection Size and Type	_____
Outlet Connection Size and Type	_____
Motive Water Supply, l/s (gpm) and Pressure, kPa (psig)	_____
Vacuum Produced at Design Motive Water Flow, kPa (in W.G.)	_____
Air Flow at Design Motive Water Flow, m^3/sec (scfm)	_____
Body Material	_____
Nozzle Diameter mm (in)	_____
Nozzle Material	_____

ATTACHMENT 4
(Continued)

Air Separator

Model No. _____

Size (Diameter x height, m (ft) _____

Weight, kg (lbs) -

empty _____

full _____

Wall thickness, mm (in) _____

Material _____

Wear section thickness, mm (in) _____

Wear section material _____

Extent of shop assembly _____

Silo Vent Filter

Number being supplied _____

Manufacturer _____

Model Number _____

Weight, Kg (lbs)

Operating _____

Empty _____

Dimensions

Number of Bags _____

Bag Material _____

ATTACHMENT 4
(Continued)

Piping

Material _____

Size _____

Weight per m (ft) _____

Lineal m (ft) supplied _____

Hardness of Vendor furnished
Fly Ash Pipe, BHN _____

Expansion Joints

Type _____

Size mm (in) _____

Number furnished _____

Fittings (list separately for each)

Size mm (in) _____

Weight _____

Number being supplied _____

Hardness of Vendor furnished fittings _____

Pneumatically Operated Air Line Valves

Number being supplied _____

Manufacturer - valve _____

Valve Model Number _____

Valve Size mm (in) _____

Valve Weight Kg (lbs) _____

ATTACHMENT 4
(Continued)

Pneumatically Operated Air Line Valves (cont'd.)

Manufacturer Operator _____

Operator Model Number _____

Operator Weight _____

Air Requirements _____

Pneumatically Operated Ash Segregating Valves

Number being supplied _____

Manufacturer - Valve _____

Valve Model Number _____

Valve Size mm (in) _____

Valve Weight Kg (lbs) _____

Manufacturer - Operator _____

Operator Model Number _____

Operator Weight Kg (lbs) _____

Air Requirements _____

Fly Ash Intake Valves

Quantity _____

Manufacturer _____

Type _____

Type of Actuator _____

Air Requirements, m^3/sec and kPa
(scfm and psig) _____

ATTACHMENT 4
(Continued)

Fly Ash Intake Valves (cont'd.)

- Size mm (in) _____
- Material _____
- Duration and frequency of Stroke _____
- Extent of Shop Assembly _____

Ash Silo Fluidizing Air System _____

Silo Fluidizing Air Diffusers

- Quantity _____
- Air Requirement Per Diffuser, m^3/sec (scfm) _____
- Total Air Requirement, m^3/s (scfm) _____
- Pressure Requirement, kPa (psig) _____

Fluidizing Air Blowers

- Manufacturer/Model Number _____
- Type _____
- Quantity _____
- Volume Flow/Blower, kPa (scfm) _____
- Discharge pressure, kPa (psig) _____
- Discharge Temperature Assumed, ^{o}C (^{o}F) _____
- Maximum Discharge Pressure, kPa (psig) _____
- Blower Efficiency, percent _____
- Motor, kw (hp) _____
- Blower Speed, rpm _____

ATTACHMENT 4
(Continued)

Fluidizing Air Blowers (cont'd.)

Runout Conditions

Flow, m^3/s (scfm) _____

Discharge Pressure, kPa (psig) _____

Maximum Discharge Pressure, kPa (psig) _____

Brake Horsepower, kw (bhp) _____

Pressure Relief Setting kPa (psig) _____

kw (bhp) @ Pressure Relief Setting, kw (bhp) _____

Weight (including motor) kg (lbs) _____

Blower, Inlet Connections

Size, mm (in) _____

Type _____

Blower, Outlet Connections

Size, mm (in) _____

Type _____

Extent of Shop Assembly _____

Fluidizing Air Heaters

Number _____

kW (each/total) _____

Power Supply (Voltage/Phase/Hz) _____

Controls _____

ATTACHMENT 4
(Continued)

Air Filters/Silencers

Manufacturer/Model Number _____

Type _____

Quantity _____

Design Pressure Drop, kPa (in W.G.) _____

Reusable, Yes/No _____

Snubbers

Manufacturer/Model Number _____

Type _____

Quantity _____

Volume, m^3 (ft^3) _____

Design Pressure, kPa (psig) _____

Design Temperature, ^oC (^oF) _____

Inlet/Outlet Connections

Size, mm (in) _____

Type _____

Back Pressure Regulator Valve

Manufacturer/Model Number _____

Type _____

Size _____

ATTACHMENT 4
(Continued)

Control Panel

Manufacturer _____

Size _____

NEMA Type _____

Power Requirements _____

ATTACHMENT 5

ACOUSTIC DATA SUMMARY SHEET

MECHANICAL BLOWERS

Octave Band Geometric Mean Frequency (Hertz)	Equipment Without Acoustic Treatment or Guarantee	Equipment With Maximum Sound Level Guarantee of 90 dBA at 1 meter (3 feet)
63	_____	_____
125	_____	_____
250	_____	_____
500	_____	_____
1000	_____	_____
2000	_____	_____
4000	_____	_____
8000	_____	_____

Kind of levels given, indicate which of the following:

Sound Power Levels re 10 (exp -12) watt	_____	_____
Sound Pressure Levels re 2x10 (exp -4) microbars	_____	_____

If sound pressure levels are given, indicate both of the following:

Weighting network use A, B, C, or Linear (None)	_____	_____
Distance to sound source Feet or Meters	_____	_____

Vendor Comments: _____

_____

_____

_____

402

LAKHRA POWER FEASIBILITY STUDY

SPECIFICATION M-15

CLOSED CIRCUIT COOLING WATER HEAT EXCHANGERS

SPECIFICATION M-15

CLOSED CIRCUIT COOLING WATER HEAT EXCHANGERS

TABLE OF CONTENTS

Article	Title	Page
1.0	DESCRIPTION OF WORK	1
2.0	WORK INCLUDED	1
3.0	WORK NOT INCLUDED	1
4.0	APPLICABLE CODES, STANDARDS, AND REGULATORY REQUIREMENTS	2
5.0	SUPPLEMENTAL DATA	2
6.0	VENDOR DATA	2
7.0	DESIGN REQUIREMENTS	4
8.0	PERFORMANCE REQUIREMENTS	5
9.0	MATERIAL REQUIREMENTS	5
10.0	FABRICATION AND ASSEMBLY REQUIREMENTS	5
11.0	INSTALLATION REQUIREMENTS (NONE)	6
12.0	PERSONNEL REQUIREMENTS	6
13.0	INSPECTIONS AND TESTS	6
14.0	CLEANING, CORROSION PROTECTION, AND COATING	7
15.0	MARKING AND IDENTIFICATION	8
16.0	PACKAGING, SHIPPING, AND STORAGE	9
17.0	ACCEPTANCE CRITERIA	9

TABLE OF CONTENTS
(Continued)

ATTACHMENTS:

1. Design Data Cooling Water Heat Exchangers

2. Summary Data Cooling Water Heat Exchangers

3. Cooling Water Heat Exchangers Connections

4. Typical Circulating Water Analyses

5. Typical Closed-Loop Cooling Water Chemical Analysis

6. Arrangement Drawing Closed Circuit Cooling Water Heat Exchanger

7. Vendor Data Requirements and Submittal Schedule (Later)

LAKHRA POWER FEASIBILITY STUDY
TECHNICAL SPECIFICATION M-15
CLOSED CIRCUIT COOLING WATER HEAT EXCHANGER

1.0 DESCRIPTION OF WORK

This Specification covers the design requirements of the two (2) 100 percent cooling water heat exchangers and accessories as specified below. The heat exchangers will be used at two 350 MW power plants for the Water and Power Development Authority (WAPDA) to be located in Pakistan. The cooling water heat exchangers will be installed in a closed cycle to supply the various cooling water needs of plant systems and component equipment. The source of circulating water for the heat exchangers will be from a cooling tower which has as its source treated Indus River water.

The purpose of the Specification is to supply the Vendor with sufficient information for a quotation on the cooling water heat exchangers for the Owner's service requirements.

The Vendor shall be fully responsible for the heat exchangers design and tube material selection and shall warrant both items in his warranty of equipment. If the Vendor cannot warrant tube material selection specified, he shall offer an alternate which he can warrant.

The power plant is designed to operate as a base load unit. The Vendor shall design the cooling water heat exchangers for this condition.

2.0 WORK INCLUDED

The following shall be provided:

2.1 Four (4) closed cooling water heat exchangers.

2.2 Channel and shell side relief valves.

2.3 Heater supports.

2.4 Design criteria for foundations and anchor bolts. Complete details shall be submitted by the Vendor upon award of Contract.

3.0 WORK NOT INCLUDED

3.1 Connecting Piping

3.2 Anchor bolts and foundations, including sole plates and roller rails.

3.3 Unloading and field erection.

4.0 APPLICABLE CODES, STANDARDS, AND REGULATORY REQUIREMENTS

4.1 The cooling water heat exchangers shall conform to the codes and standards of the following as referenced herein:

American Society of Mechanical Engineers (ASME)

American National Standards Institute (ANSI)

American Society for Testing Materials (ASTM)

Heat Exchange Institute (HEI)

Tubular Exchanger Manufacturers Association (TEMA)

4.2 Application of codes and standards referenced herein requires the application of the latest issue date and of all addenda adopted as of the date of the purchase order. Later revisions may be invoked only by mutual agreement between Purchaser and Vendor.

4.3 Each vessel shall be stamped in accordance with Paragrah UG-118 ASME Boiler and Pressure Vessel Code, Section VIII, Division 1. The stamping shall be applied at a prominent location.

4.4 Where the requirements of this Specification exceed those of referenced codes, the Specification shall govern.

4.5 Nothing in this Specification shall be construed to relieve the Vendor of his responsibility in respect to applicable codes and regulations.

5.0 SUPPLEMENTAL DATA

The documents listed on the contents page as attachments are applicable to the work, to the extent specified herein.

6.0 VENDOR DATA

6.1 Vendor data shall be furnished in accordance with the requirements indicated on the attached (later) Vendor Data Requirements and Submittal Schedule.

6.2 Vendor shall furnish Certified Vendor Drawings, and include a list of drawings by category, such as general arrangement, foundation data, and electrical connection. If titles of the Certified Vendor Drawings are unknown, bidder shall submit the estimated number of drawings he will submit in each category.

6.3 The Vendor shall provide (No. later) copies of an instruction book covering all equipment being furnished. The instruction book shall have hard front and back covers and have proper identification on the front cover as to contents.

6.4 Instruction books are not considered design manuals, and if any discrepancies arise between the Vendor's drawings and instruction books, or items omitted from the drawings which are contained in the instruction book recommendations, the Vendor shall amend the instruction books or shall modify the installation at his own expense, whichever is deemed by the Owner as giving the most proper and opertive final installation.

6.5 The following items are requested to be furnished with the bid. Data which are representative rather than exact shall be identified as such:

a. Recommended arrangement for operating and start-up vents.

b. All equipment support loads, and description of proposed support hardware.

c. Completed Summary Data Sheets Attachment 2.

d. Statement of any temperature transient limitations.

e. Statement of any temperature or entrance velocity limitations.

6.6 PERFORMANCE TEST REPORTS AND CERTIFICATIONS

The following performance reports and certifications shall be submitted to the Owner prior to acceptance of the Work:

a. Certified copies of all shop test data shall be forwarded to the Engineer for later distribution to the Owner.

b. The Vendor shall furnish procedures and instructions for all field installation and all required start-up tests and instruction books for the equipment being furnished.

6.7 SPECIAL TOOLS AND SPARE PARTS

The Vendor shall supply the following:

a. One set of any special tools required to operate and maintain his equipment, including tube expanding devices for each size tube, and one set of any special tools required to remove and install manway cover. All tools shall be identified by name and number, and this number shall appear on drawings and instructions to indicate the application of the tools furnished and to permit the ordering of replacement tools.

b. One set of lifting slings or cradles for removal of tube bundles from heaters designated for bundle removal.

c. The Vendor shall supply, with his proposal, pricing for 1- and 5-year supplies of spare parts.

7.0 DESIGN REQUIREMENTS

7.1 Channels shall be of ample depth to prevent tube sheet and head erosion. The design shall include additional devices as may be required, such as flow straighteners, distribution controlling devices, and tube inlet liners, to minimize erosion and/or corrosion.

7.2 A corrosion allowance of 1.5 mm (1/16 inch) shall be included in the thickness of all carbon steel pressurized components.

7.3 Circulating water velocity in tubes shall not exceed 2.4 m/sec (8 ft/sec) at a specific gravity of 1.0 for either heat exchanger.

7.4 The cooling water heat exchangers shall be of welded design which includes all external connections such as shell joints, Purchaser's connections, and seal welding tapped connections. Channel covers shall be flanged and bolted.

7.5 Number of tube support plates shall be sufficient to minimize vibration. The plates shall be spaced to prevent resonance.

7.6 Tube-support-plate holes shall be round and smooth, and have sharp edges chamfered to prevent tube damage.

7.7 The maximum tube side pressure drop shall be 34.5 kPa (5.0 psi) at the design condition.

7.8 The tube side fluid will be circulating water with typical analyses as listed in Attachment 4.

7.9 The shell side fluid will be closed-loop cooling water with typical analysis as listed in Attachment 5.

7.10 The cooling water heat exchangers shall be of the horizontal, single pass shell, single pass tube, baffled type. Each heat exchanger shall be designed to operate under the conditions as specified on Table 1 attached to this Specification.

7.11 The space available for installation including pulling clearance is approximately 22 meters (72'-0") overall length.

7.12 Shell side and tube side relief valves of appropriate size shall be furnished by the Vendor.

7.13 Heat exchangers shall be equipped with fixed supports at two points consisting of saddles and supporting legs for mounting on Purchaser's steel or concrete work. Provisions to accommodate thermal expansion shall be designed into the supporting device. The legs shall be sized to allow a minimum clearance of .6 meters (2 feet) between the floor and the bottom of the shell.

7.14 The heat exchangers shall be designed for removal of the tubes. The shells shall have the required lifting lugs for handling the entire heat exchanger.

8.0 PERFORMANCE REQUIREMENTS

8.1 Each cooling water heat exchanger shall be guaranteed to perform in accordance with the design values specified on Attachment 1.

8.2 Performance of the heat exchangers shall be determined in accordance with the procedures of the ASME Power Test Code for Feedwater Heaters PTC 12.1 except that demonstration of the specified terminal difference, drain temperature approach and the pressure losses as measured at the heater nozzles will be accepted as adequate demonstration of guaranteed performance.

9.0 MATERIAL REQUIREMENTS

9.1 Tubes shall be ASTM B543 welded 90-10, Cu-Ni not less than 25 mm (1.0 inch) O.D. and wall thickness not less than 16 BWG average wall thickness.

9.2 Shell, nozzles, flanges, channels, tube sheets, baffles other than impingement baffle and tube support plates shall be as specified in Section D-3, Material Design Standards of the Heat Exchange Institute for Closed Feedwater Heaters.

10.0 FABRICATION AND ASSEMBLY REQUIREMENTS

10.1 The heat exchangers shall be manufactured in accordance with Mechanical Standards, TEMA Class "C" Heat Exchangers.

10.2 TUBES AND TUBE SHEETS

10.2.1 Tube-ends shall be rolled to the tube sheets. Expansion of tubes to the tube sheet shall not result in a wall thickness reduction greater than 6 percent of original thickness with a nominal reduction of 3 percent.

10.2.2 Circumferential welding of tubes to extend their length shall not be permitted.

10.3 SHELLS AND CHANNELS

10.3.1 The number, types, size and location of all nozzles and connections on all heat exchangers are subject to final approval by the Purchaser's Engineer.

10.3.2 All butt weld end preparations of pipe nozzles shall conform to ANSI B16.25.

10.3.3 Channel closure covers shall be of the flanged and bolted design for access to inlet and outlet side tube sheets for cleaning and

maintenance. Channel closure covers shall also include manholes for inspection.

10.3.4 Shell and channel connections shall be as listed on Attachment 3.

10.4 WELDING PROCEDURES

10.4.1 Welding procedures shall be qualified in accordance with ASME Boiler and Pressure Vessel Code, Section IX and as modified by Paragraph UG-84, ASME Boiler and Pressure Vessel Code, Section VIII, Division 1. If electroslag welding procedure is applied for butt welding, the procedure qualifications shall be further qualified by ASME interpretation Case 1355.

10.4.2 All longitudinal joints, joints within a formed or flat head and joints attaching hemispherical heads to cylindrical shells, shall be Type 1, Table UW-12, ASME Boiler and Pressure Vessel Code, Section VIII, Division 1.

10.4.3 Circumferential welded joints within the main shell joints attaching formed heads other than hemispherical to cylindrical shells or joints attaching flanges to cylindrical shells or nozzles shall be Type 1 or 2, Table UW-12, ASME Boiler and Pressure Vessel Code, Section VIII, Division 1.

10.4.4 Welds connecting nozzles larger than 50 mm (2 inch) nominal pipe size to the shell side of the vessel shall be full penetration welds extending through the entire thickness of the vessel wall.

11.0 INSTALLATION REQUIREMENTS

None

12.0 PERSONNEL REQUIREMENTS

12.1 All welders shall be qualified under the ASME Boiler Pressure Vessel Code, Section IX.

12.2 The Vendor shall include supervision of installation and the start-up engineering services priced separately in his proposal.

13.0 INSPECTIONS AND TESTS

13.1 The Purchaser's Engineer shall at all times have free access to the Vendor's shops and to the following records which shall be kept and made available to the Purchaser's Engineer.

13.2 The Inspection and Test Plan shall include but not be limited to the following mandatory Hold Points:

a. Bundle Insertion
b. Hydrostatic Test
c. Final Inspection Prior to Shipment

13.3 The Vendor shall provide the Owner, or his authorized agent, a minimum of seventy-two (72) hours advance notice, exclusive of weekends and holidays, of these mandatory Hold Points.

13.4 Hold Point shall be defined as a check point in a sequential operation at which certain data are taken, inspections made, or approved required before the next sequential step can be taken.

13.5 Inspection and Test Plan shall be defined as a listing with optimum sequencing, of all the inspections and tests required to be performed for a specific item, component, structure of system.

13.6 The Purchaser's Engineer's Inspectors will have the authority to refuse "release for shipment" if all requirements of approval drawings, procedures. Specification, purchase documents, and codes or standards have not been fulfilled or if certified copies of required inspection and test reports are not available for review.

13.7 Each lenth of tubing shall be inspected by both hydrostatic and eddy current nondestructive procedures. Hydrostatic tests shall be at 150 percent of the channel design pressure. Nondestructive test for the welded tubes shall be in accordance with ASTM Method E-243.

13.8 Hydrostatic test at 1.5 times the design pressure of both the shell and tube sides of all heat exchangers shall be performed by the Vendor in accordance with Paragraph UG-99, ASME Boiler and Pressure Vessel Code, Section VIII, Division.

13.9 The steel tube sheets, steel channels and steel channel covers of both heat exchangers shall have a nil ductility temperature test to permit hydrostatic testing of the units at 150 percent of design pressure using a fluid temperature of 15.6°C (60°F). It shall be demonstrated by Charpy V-notch impact test values of 20.3 joules (15 foot-pounds) average for three samples with a minimum of 13.6 joules (10 foot-pounds) for one sample at a test tempeature of -1°C (30°F.) Material and weld test plates prepared in accordance with ASME Boiler and Pressure Vessel Code, Section 1X as modified by Section VIII, Division 1, Paragraph UG-84, shall be tested in the base metal, weld metal and heat affected zones.

14.0 CLEANING, CORROSION PROTECTION, AND COATING

14.1 All manufacturing waste such as metal chips and filings, welding rods and stubs, waste, rags, debris and other foreign material shall be removed from the interior of each unit prior to preparation for shipment. All mill scale, rust, oil, grease, chalk, crayon or paint marks and other deleterious materials shall be removed from interior and exterior surfaces. At the time of shipment each unit shall be clean inside and out.

14.2 Each unit shall be completely drained and purged dry following hydrostatic test. Each opening shall be closed with an appropriate pressure tight device to protect connection surfaces, prevent the

entrance of foreign material and seal the unit for pressurization with nitrogen.

14.3 Each unit shall be purged and pressurized to 34.5 kPa (5 psig) with commercially pure nitrogen during storage and shipment. The Vendor shall furnish the supply tanks, regulators, connections and gauges necessary to maintain pressurization of the units until they are delivered to the plant site.

14.4 The heat exchangers shall have exterior protective coating but no protective coatings of any kind shall be applied to interior surfaces of the heat exchangers.

15.0 MARKING AND IDENTIFICATION

15.1 Each package, skid, box and crate shall be marked on the outside with the following information so that it is readily visible:

a. (Owner's Name)
(Project Identification)
(Address)
(City, State, Zip Code)

b. Purchase Order Number:

c. Weight:

d. Equipment Nos. as applicable:

15.2 Each unit shall be identified with a tag number. The number shall be permanently imprinted with at least 5 mm (3/16 inch) high letters on a 22-gauge stainless steel tag. The tag shall be attached to the enclosure with pins of a similar material.

15.3 Each unit shall have a permanently secured data plate made from at least 22-gauge stainless steel, permanently imprinted with 5 mm (3/16 inch) high letters, and containing the following information:

a. Manufacturer's Name and Address:

b. Model Number:

c. Serial Number:

d. Date of Manufacture:

e. Duty:

f. Weight:

15.4 The data plate shall be located where it is readily visible and shall be securely attached with pins of a material similar to the plate.

15.5 Equipment item numbers shall be utilized by the Vendor in designated equipment. Numbers so assigned by the Vendor may be reassigned at the option of the Engineer.

15.6 Items furnished under these specifications, but not identified herein, shall have tags inscribed as directed by the Engineer.

16.0 PACKAGING, SHIPPING AND STORAGE

16.1 All items shall be adequately crated, wrapped or otherwise protected so that shipment and delivery may be made without damage.

16.2 All flanges shall be protected by bolted on wooden covers and all threaded openings shall be closed with caps of plugs.

16.3 A list and description of the contained material shall be plainly marked on the outside of each shipping container. All individual items shall be tagged.

16.4 Bolts, nuts, fittings and other small parts shall be separately boxed or packaged for shipment and properly tagged and identified.

16.5 Three copies of packing lists and shipping memoranda (special handling requirements, storage instructions, etc.) shall be mailed forty-eight hours before shipment is made. Packing lists shall include Vendor's mark number and Owner's tag number. Copies of shipping papers shall be mailed as follows (later):

16.6 Unless otherwise specified by the Vendor, storage of the equipment shall be outdoors. The Vendor shall inform the Owner of any special storage requirements sufficiently in advance of shipping of the equipment to allow for necessary preparation.

17.0 ACCEPTANCE CRITERIA

17.1 The following performance reports and certifications shall be submitted to the Owner prior to acceptance of the Work.

a. Certified copies of all shop test data shall be forwarded to the Engineer for later distribution to the Owner.

b. The Vendor shall furnish procedures and instructions for all field installation and all required start-up tests and instruction books for equipment being furnished.

c. The Vendor shall submit all data required per Specification Summary Sheets 1-3, Attachment 2.

ATTACHMENT 1

DESIGN DATA - COOLING WATER HEAT EXCHANGERS

Heater Load	Design Conditions
Duty - Btu/Hr	36.93 x 10^6 kj/hr (35 x 10^6 BTu/hr)
Cooling Water - (constant at all loads)	386 l/s (6125 GPM)
Cooling Water Outlet Temperature -	38.3°C Maximum (101°F)
Circulating Water Flow -	773 l/s (12,250 gpm)
Circulating Water Inlet Temperature -	35°C (95°F)
Heat Exchanger Outlet Terminal Diff -	3.75°C (6°F)
Shell Side Design Pressure -	862 kPa bar/101.5 kPa Vacuum (125 psig/30 in Hg Vacuum)
Shell Side Design Temperature -	49°C (120°F)
Tube Side Design Pressure -	413.7 kPa (60 psig)
Tube Side Design Temperature -	49°C (120°F)
Tube Side Pressure Drop -	34.5 kPa (5 psig)
Tube Side Cleanliness Factor	85%

ATTACHMENT 2

SUMMARY DATA

COOLING WATER HEAT EXCHANGERS

Manufacturer	_____
Proposal No.	_____
No. of passes, tube side	_____
Tubes - Material	_____
- Gauge - mm (BWG)	_____
- Outside diameter - mm (in.)	_____
- Spacing	_____
- Average effective length - mm (in.)	_____
- Surface - m^2 (ft^2)	_____
Shell - Material	
- Inside diameter - mm (in.)	_____
- Thickness - mm (in.)	_____
Tube Sheets - Material	_____
- Thickness - mm (in.)	
Tube support plates - Material	_____
- Thickness - mm (in.)	_____
- Number Provided	_____
- Maximum Distance Between Supports	_____
Channel - Material	_____
- Cover thickness - mm (in.)	_____

- Depth inside - mm (in.) _____
- Gasket material _____

Flow Baffles
- Material _____
- Thickness - mm (in.) _____
- Number Provided _____

Impingement Baffles
- Material _____
- Thickness - mm (in.) _____
- Number Provided _____

Liners
- Material _____
- Thickness - mm (in.) _____

Weight
- Empty - Kg (lb) _____
- Operating - Kg (lb) _____
- Full of water Kg (lb) _____

Pressure drop
- Shell side - kPa (psi) _____
- Tube side - kPa (psi) _____

Water Velocity
- Tube side - m/s (ft/s)@ 16°C (60°F) _____ ( )
  m/s (ft/s)@op. temp. °C (°F) _____
  Shell side - m/s (ft/s)@ 16°C (60°F) _____ ( )
  m/s (ft/s)@op. temp. °C (°F) _____

Shell Relief Valve
- Manufacturer _____
- Mfgr's Designation _____
- Size & Quantity _____
- Set Pressure - kPa (psi) _____

Tube Side Relief

Valve

- Manufacturer _____
- Mfgr's Designation _____
- Size & Quantity _____
- Set Pressure - kPa (psi) _____
- Capacity - tonnes/hr (lb/hr) _____

Note: Alternates shall be included in separate table.

ATTACHMENT 3

COOLING WATER HEAT EXCHANGERS CONNECTIONS

	No.**	Size	Type	Location
Shell				
Cooling Water Inlet	1	____*	Weld End	
Cooling Water Outlet	1	____*	Weld End	
Drains	As Req'd	100mm (4")	Weld End	
Air Vent-Operating	By Vendor		Socket Weld	
Air Vent-Start-Up	By Vendor		Socket Weld	
Relief Valve	By Vendor		Flanged	Top of Shell
Level Control	2	50mm (2")	Socket Weld	
Level Indicator	2	50mm (2")	Socket Weld	
Tempeature	2	25mm (1")	Tapped	One Each - Cooling Water Inlet Cooling Water Outlet
Pressure	3	12mm (1/2")	Socket Weld	One Each - Top of Shell Cooling Water Inlet Cooling Water Outlet
Channel				
Inlet	1	____*	Weld End	
Outlet	1	____*	Weld End	
Drain	1	50mm (2")	Socket Weld	
Vent	1	25mm (1")	Socket Weld	
Relief Valve	1	25mm (1")	Socket Weld	
Pressure	2	12mm (1/2")	Socket Weld	One Each - Inlet & Outlet

Temperature	2	25mm (1")	Tapped	One Each - Inlet & Outlet

ATTACHMENT 4

TYPICAL CIRCULATING WATER ANALYSIS

Measuring Item	Unit	Value
Temperature	°C	13-46°C (55-115°F)
pH		6.5-8.5
Conductivity	Micr-Mho/cm	2700
Total Solid	ppm	1500
Chloride	ppm as Cl	700
Total Hardness	ppm as $CaCO_3$	700-1000
Suspended Solids	ppm	150

ATTACHMENT 5

TYPICAL CLOSED-LOOP COOLING WATER CHEMICAL ANALYSIS

pH at 25°C (77°F)	8.9 - 9.2
Maximum dissolved solids, ppm	25
Maximum oxygen as O_2, ppm	0.1
Morpholine, ppm	2 - 6
Hydrazine, ppm	15 - 25
Maximum chlorides as CL-, ppm	1.0
Maximum flourides as F-, ppm	1.0

ATTACHMENT 6
ARRANGEMENT DRAWING
CLOSED CIRCUIT COOLING WATER HEAT EXCHANGER

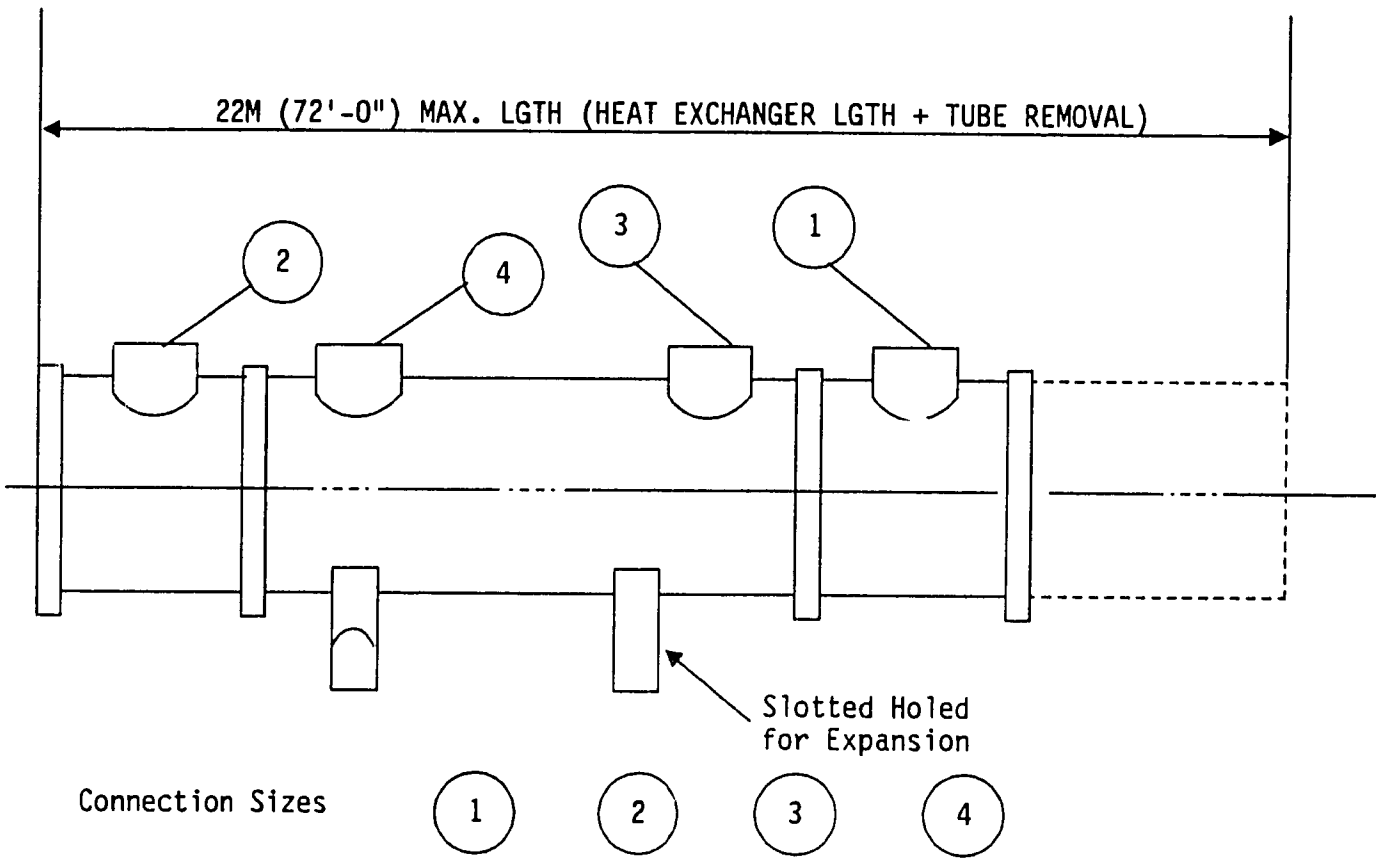

Connection Sizes 1 2 3 4

Cooling Water Heat exchanger Equipment Nos.	Circ. Water In	Circ. Water Out	Cooling Water Out	Cooling Water In
Later	*	*	*	*
Later	*	*	*	*
*Size by Vendor				

LAKHRA POWER FEASIBILITY STUDY

SPECIFICATION M-16A

DIESEL ENGINE AND ELECTRIC MOTOR DRIVEN
FIRE PUMP AND ACCESSORIES

LPS/2/B1441/D1

DIESEL ENGINE AND ELECTRIC MOTOR DRIVEN
FIRE PUMP AND ACCESSORIES

SPECIFICATION M-16A

TABLE OF CONTENTS

		Page
1.0	DESCRIPTION OF WORK	1
2.0	WORK INCLUDED	1
3.0	WORK NOT INCLUDED	2
4.0	APPLICABLE CODES, STANDARDS, AND REGULATORY REQUIREMENTS	2
5.0	SUPPLEMENTAL DATA	3
6.0	VENDOR DATA	3
7.0	DESIGN REQUIREMENTS	5
8.0	PERFORMANCE REQUIREMENTS	9
9.0	MATERIAL REQUIREMENTS	9
10.0	FABRICATION/ASSEMBLY REQUIREMENTS	9
11.0	INSTALLATION REQUIREMENTS (None)	9
12.0	PERSONNEL REQUIREMENTS (None)	9
13.0	INSPECTIONS AND TESTS	9
14.0	CLEANING/CORROSION PROTECTION/COATING	11
15.0	MARKING AND IDENTIFICATION	11
16.0	PACKAGING, SHIPPING, AND STORAGE	12
17.0	ACCEPTANCE CRITERIA	13

ATTACHMENTS:

1. Electric Motor Driven Fire Pump and Accessories
2. Design Information Required With Proposal
3. Motor Attachment Specification
4. Motor Data Sheet

LAKHRA POWER FEASIBILITY STUDY
DIESEL ENGINE AND ELECTRIC MOTOR DRIVEN
FIRE PUMP AND ACCESSORIES

SPECIFICATION M-16A

1.0 DESCRIPTION OF WORK

The work to be performed consists of design, fabrication, and delivery for two horizontal fire pumps: one with electric motor and the other with diesel engine drive, complete with controllers and all required accessories in accordance with NFPA Codes 20 and 70, Underwriters' Laboratory Standard UL-448 and Factory Mutual (FM) System. The fire pumps will be in service at two 350 MW power plants for the Water and Power Development Authority (WAPDA) to be located in Pakistan.

The fire pumps, motor, controller, and all required accessories shall be inspected, tested, and shipped in accordance with this Specification.

2.0 WORK INCLUDED

2.1 Equipment and materials supplied shall include, but not be limited to the following:

a. One electric motor driven and one diesel engine driven horizontal fire pumps, UL-listed/FM approved with couplings, and coupling guards.

b. Fire Pump Driver Controllers, UL-listed/FM approved.

c. Necessary accessories to include, but not be limited to, the accessories listed in Article 7.0, of this Specification.

d. An itemized list of special tools and test equipment, and spare parts.

2.2 The Vendor shall furnish competent and experienced representatives at the installation site to make recommendations with respect to the unloading, handling, installation, adjusting, and assembly of the equipment to be furnished, and the initial starting and placing of the equipment in good operating condition.

2.3 The price of such standard services offered shall be listed separately from the base quoted price. The Vendor shall specify the number of days such service is included in the price listed. The Vendor shall also quote a per diem price for such services above and beyond the number of days service included in his standard offering, with such extra days only to be worked at the specific request of the Owner. Daily time sheets will be submitted to the Owner verifying each day worked by the Vendor's field representative irrespective of whether such days are included in the above standard offering.

2.4 Such services required due to defects in design, workmanship, or material for any component furnished by the Vendor shall not be chargeable against either the days included in the Vendor's standard offering or on a per diem basis.

3.0 WORK NOT INCLUDED

3.1 The following equipment, materials, and services will be supplied by others:

a. Anchor bolts, shims and foundations

b. Unloading and field erection

c. Operating personnel for installation, start-up, and testing

d. All lubricants required for operation

e. Pump suction and discharge piping

f. Electrical power connections; power available

1. 400V, 3 phase, 50 Hz, ungrounded

2. 220V, 1 phase, 50 Hz.

4.0 APPLICABLE CODES, STANDARDS, AND REGULATORY REQUIREMENTS

When standards such as Underwriters' Laboratory (UL), Factory Mutual (FM), National Fire Protection Association (NFPA), etc. are referred to in this Specification, without current or effective dates, the latest revision of the standard references as of the date of the purchase order for the work of this Specification shall be considered applicable.

4.1 NATIONAL FIRE PROTECTION ASSOCIATION (NFPA)

NFPA-20 Standard for the Installation of Centrifugal Fire Pumps

NFPA-70 National Electric Code

4.2 FACTORY MUTUAL CORPORATION (FM)

4.3 UNDERWRITERS' LABORATORIES INC. (UL)

UL 448 Pumps for Fire Protection

4.4 NATIONAL ELECTRICAL MANUFACTURERS ASSOCIATION (NEMA)

ICS.6 Enclosures for Industrial Controls and Systems

5.0 SUPPLEMENTAL DATA

The items listed under "Attachments" in the Table of Contents, are hereby made a part of this Specification. Any modifications to the standard Specification attached hereto shall be made only with the express written approval of the Engineer.

6.0 VENDOR DATA

6.1 The Vendor shall furnish the following information with the proposal.

a. Description of Lubrication System for Pumps

b. Description of Fire Pump Control System

c. Curves

1. Head vs. capacity

2. Bhp vs. capacity

3. Efficiency vs. capacity

4. NPSH required vs. capacity

d. Schematic and wiring diagrams of all electrical systems involved.

e. Description of equipment and materials being furnished.

521

f. Outline drawings giving sufficient details and dimensions to enable the Engineer to complete associated engineering studies, to determine major foundation design requirements, to establish space and access requirements, and to establish the quality and location of associated equipment connections required by the equipment and materials comprising the system.

g. Completed copies of all data sheets in Attachment 2 of this Specification, Itemized Price List, Exceptions, if any, and all data sheets appearing in supplemental Specifications attached.

h. Weights of major component parts or assemblies.

i. An itemized list of special tools and test equipment required for installation, start-up, or maintenance.

j. Setting Drawing showing anchor bolt locations and bolt sizes.

k. The Vendor shall supply, with his proposal, pricing for 1 and 5 year supplies of spare parts.

6.2 After award of contract, the Vendor shall submit the following:

a. Certified outline drawings of fire pumps, drives and accessories.

b. Certified performance curves.

c. Operating and Maintenance instructions including as a minimum:

1. Installation Procedures

2. Operating Procedures

3. Lubrication Procedures

4. Parts List

d. Storage and Handling Instructions.

The Vendor shall supply preliminary operating instructions 4 months before shipment and final instructions 60 days before shipment.

6.3 Special Tools and Spare Parts

6.3.1 The Vendor shall supply the following:

One set of any special tools required to operate and maintain his equipment. All tools shall be identified by name and number, and this number shall appear on drawings and instructions to indicate the application of the tools furnished and to permit the ordering of replacement tools.

7.0 DESIGN REQUIREMENTS

7.1 GENERAL

This Specification covers the manufacturing and furnishing of one electric motor driven horizontal and one diesel engine driven vertical fire pump and accessories. The fire pump will be located indoors in a mechanical equipment room.

Fire pump design conditions are listed in Attachment 1.

7.2 HORIZONTAL CENTRIFUGAL FIRE PUMPS

7.2.1 The fire pumps shall be of horizontal centrifugal single stage construction specifically labeled for fire service. The suction supply for the fire pump will be from an elevated water tank at a maximum pressure of 275 kPa (40 psig) and a minimum pressure of 206 kPa (30 psig). The pump casing shall be cast iron with 200mm (8 inch) 250 lb rating suction and 150mm (6 inch) 250 lb rating discharge flanges machined to American National Standards Institute (ANSI) dimensions.

7.2.2 The fire pump, driver, and controller shall each be furnished fully assembled and mounted on a common base arrangement.

7.3 ELECTRIC MOTOR DRIVE

Electric motor shall be furnished in accordance with Attachment 3 and meet the requirements of NFPA 20.

7.4 ELECTRIC MOTOR CONTROLLER

7.4.1 The controller shall be UL listed/FM approved and combined manual and automatic across-the-line type controller for fire pump service.

7.4.2 The controller shall be in a watertight NEMA Type 4 enclosure and shall be marked "Electric Fire Pump Controller". Identification and marking shall be in accordance with Article 15.0 of this Specification.

7.4.3 The controller shall be completely assembled, wired, and tested by the manufacturer before shipment from the factory.

7.4.4 A wiring diagram shall be permanently attached to the inside of the enslosure, and complete instructions covering the operation of the controller shall be conspicuously mounted on the controller. All field wiring terminals shall be plainly marked to correspond with the wiring diagram furnished.

7.4.5 The controller shall include the following features:

a. Motor Starter

The controller shall have an across-the-line type starter energized automatically through either a deluge valve contact or a pressure switch in the controller or remote start contact or controller start button or mechanical starting lever. The starter shall be manually stopped only.

b. Circuit Breaker

For protection against over current with interrupting capacity of 30,000 amps symmetrical. The circuit breaker shall not open at the sum of the locked rotor currents of the fire pump motor and other associated fire pump electrical accessory currents.

c. Isolating Switch

To isolate incoming service power from the rest of the controller.

d. "Power On" Pilot Light

Front mounted lamp to indicate that power is available to the controller. Lamp color shall be Red.

e. Start and stop pushbuttons.

f. Alarm system for pump running conditions.

7.5 FITTINGS (MOTOR DRIVE)

The pump manufacturer shall furnish piping accessory items for the pump installation which will adapt the pump connections to the fire protection system and test connection as follows. All fittings supplied shall be rated for the maximum working pressure of the system.

a. Eccentric tapered suction reducer.

b. Concentric tapered discharge increaser.

c. Hose valve test head (shared by both pumps).

d. Hose valves with caps and chains

e. Pump casing relief valve.

f. Automatic air release valve.

g. Ball drip valve.

h. Suction and discharge pressure gauges.

7.6 DIESEL ENGINE DRIVE

The diesel engine pump driver shall be a horizontal shaft open type internal combustion engine rated at 1,760 rpm, clockwise rotation viewed from the end opposite the pump. The engine shall be provided by the pump manufacturer with, at a minimum the following accessories for automatic operation.

a. UL listed emergency manual operator, factory wired, and mounted on the engine junction box for standby engine starting and operation in case of main controller or interconnecting wiring malfunction.

b. Cooling waterlines, pressure regulator, strainer, bypass lines, and necessary fittings for engine cooling system, prepiped and factory mounted.

c. Flexible exhaust connector.

d. Residential exhaust silencer.

e. Engine jacket water heater, factory installed.

f. One set dual batteries, lead acid storage type.

g. Compressed air starting system with two air supply tanks per engine and a common air compressor.

h. Fuel system as recommended in NFPA Pamphlet 20.

i. Fuel storage tank sized to provide a minimum 8 hour supply of fuel per engine. The tank shall be furnished with legs for floor mounting and with a direct reading level gauge.

7.7 ENGINE CONTROLLER

The automatic engine controller shall be UL listed and FM approved specifically for fire pump service. The controller must be capable of performing or contain the following features:

Local start/stop.

Pump room alarm audible and visual signals.

The engine controller shall be mounted on a common base with the pump and engine.

7.8 FITTINGS (ENGINE DRIVE)

The pump manufacturer shall furnish piping accessory items for the pump installation which will adapt the pump connection to the fire protection system and test connection as follows. Fire pump fittings shall be rated for the maximum working pressure of the system.

a. Hose valve test head (shared by both pumps.)

b. Hose valves with caps and chains.

c. Ball drip valve.

d. Automatic air release valve.

e. Suction and discharge pressure gauge.

f. Main relief valve (direct acting spring actuated).

g. Relief valve overflow cone. (Open type for valves discharging to atmosphere.)

h. Discharge tee with elbow (for mounting relief valve).)

7.9 JOCKEY PUMP AND MOTOR

The jockey pump shall be close coupled, end suction design, bronze fitted with stainless steel shaft.

The jockey pump motor shall be open dripproof and rated at 3,000 rpm. The motor shall be sized to prevent overloading at the highest head condition 91.5m (300 feet).

7.9.1 Jockey Pump Controller

The jockey pump controller shall be listed by Underwriters Laboratories or approved by Factory Mutual and shall be designed for use with the electric motor driven jockey pump.

7.10 The successful Vendor shall supply technical assistance as required to install, adjust and operate systems in accordance with Article 2.2 of this Specification including training of the Owner's personnel. The Vendor's technical service and training representative shall be knowledgeable in all aspects of the pump operation.

8.0 PERFORMANCE REQUIREMENTS

8.1 Guarantee that the fire pump and its accessories satisfy the design conditions and characteristics of this Specification.

9.0 MATERIAL REQUIREMENTS

9.1 Materials of construction for the fire pump and accessories shall be of the standard materials for fire protection systems and shall comply with applicable UL listings and FM approval.

10.0 FABRICATION/ASSEMBLY REQUIREMENTS

Standard fabrication and assembly procedures will be satisfactory.

11.0 INSTALLATION REQUIREMENTS

None

12.0 PERSONNEL REQUIREMENTS

Personnel requirements shall be in accordance with Section 2.2 of this specification.

13.0 INSPECTIONS AND TESTS

13.1 The Owner, or any person appointed by the Owner, may at any time inspect the equipment prior to delivery to see that the same is in accordance herewith. Such inspections will be conducted during regular business hours. These inspections shall not relieve the Vendor of his obligation to furnish the equipment in accordance with the requirements of this Specification.

13.2 The Owner's Representative has the authority to refuse "release for shipment" if the requirements of procurement documents have not been fulfilled or required documentation is not available for review.

13.3 The Vendor shall give the Owner's Representative (to be defined later) a minimum of 5 days advance notice of observation and witness points. Final inspection prior to shipping is one witness point; release by the Owner's Representative prior to all shipments is reuqired. Failure to notify the Owner's Representative in advance of an established witness point shall be sufficient cause to refuse "release for shipment."

13.4 TESTING

13.4.1 All shop tests required for qualification of procedures, personnel, and proof that the equipment conforms to all applicable codes and standards and this Specification, shall be made at the expense of the Vendor and shall include, but not necessarily be limited to the following:

a. The fire pump shall be tested in accordance with NFPA 20 and UL/FM approved tests and procedures.

b. Before shipment, pressure retaining parts of the fire pump shall be hydrostatically tested to at least 1.5 times the operating pressure. The procedures and acceptance criteria shall be in accordance with NFPA and UL/FM, Codes and Standards.

c. Except where otherwise specified herein, testing, inspection, and acceptance criteria shall be the Vendor's standard which has proven satisfactory in the past and meets applicable code requirements.

13.4.2 The Owner, the Engineer, or both shall have the right of representation at all shop tests and they shall be notified at least a minimum of five calendar days in advance of all shop tests.

Six certified copies of all required test or calibration data shall be forwarded to: (Later)

13.5 Upon completion of system installation (by others), conduct an in-service test of the Fire Pump System with approval of the Owner's Representative and a Representative of the Owner's Insurance Brokers. The tests shall be a full flow capacity test throughout the operating range of the fire pump with

pressure flow, speed, voltage, and current readings being taken. If, in the opinion of the Owner's Representative or the Representative of the Owner's Insurance Brokers, the system performance does not meet the Specification requirements, the required modification costs shall be borne by the Vendor.

14.0 CLEANING/CORROSION PROTECTION/COATING

14.1 All parts shall be adequately cleaned, and the flanges and other openings sealed by blank covers, plugs, and caps. All components shall be finished painted with red enamel.

14.2 Machined surfaces, including shafts, bearings, and couplings shall be adequately protected against corrosion and damage during shipment and outdoor storage for a period of 1 year.

14.3 One gallon of the Vendor's standard shop primer and finish coat shall be supplied with the equipment.

15.0 MARKING AND IDENTIFICATION

15.1 Each package, skid, box and crate shall be marked on the outside with the following information so that it is readily visible:

a. (OWNER'S name)
(Project identification)
(Address)
(City, state, zip code)

b. Purchase Order number:

c. Weight:

d. Equipment Nos. as applicable:

15.2 Each unit shall be identified with a tag number. The number shall be permanently imprinted with at least 5mm (3/16") high letters on a 22-gage stainless steel tag. The tag shall be attached to the enclosure with pins of a similar material.

15.3 Each unit shall have a permanently secured data plate made from at least 22-gage stainless steel, permanently imprinted with 5mm (3/16") high letters, and containing the following information:

a. Manufacturer's name and address:

- 435

b. Model Number:

c. Serial Number:

d. Date of Manufacture:

e. Duty:

f. Weight:

15.4 The data plate shall be located where it is readily visible and shall be securely attached with pins of a material similar to the plate.

15.5 Equipment item numbers shall be utilized by the VENDOR in designating equipment. Numbers so assigned by the VENDOR may be reassigned at the option of the Engineer.

15.6 Items furnished under these specifications, but not identified herein, shall have tags inscribed as directed by the Engineer.

16.0 PACKAGING, SHIPPING AND STORAGE

16.1 All items shall be adequately crated, wrapped or otherwise protected so that shipment and delivery may be made without damage.

16.2 All flanges shall be protected by bolted-on wooden covers and all threaded openings shall be closed with caps or plugs.

16.3 A list and description of the contained material shall be plainly marked on the outside of each shipping container. All individual items shall be tagged.

16.4 Bolts, nuts, fittings and other small parts shall be separately boxed or packaged for shipment and properly tagged and identified.

16.5 Three copies of packing lists and shipping memoranda (special handling requirements, storage instructions, etc.) shall be mailed forty-eight hours before shipment is made. Packing lists shall include Vendor's mark number and Owner's tag number. Copies of shipping papers shall be mailed as follows (later):

16.6 Unless otherwise specified by the Vendor, storage of the equipment shall be outdoors. The Vendor shall inform the Owner of any special storage requirements sufficiently in advance of shipping of the equipment to allow for necessary preparation.

17.0 ACCEPTANCE CRITERIA

17.1 POST-AWARD DOCUMENT SUBMITTALS

Within 30 days after contract award, the Vendor shall provide the Owner's Representative with the following:

a. Manufacturing/Fabrication schedules and flow plans which identify Inspections/Tests and suggested observation and/or witness points for the Owner or the Owner's Representative.

b. Special process procedures, e.g. welding, NDE, and welder qualification; and test Procedures, etc., required by Codes and Standards and the Technical Specification.

c. A list of Quality Records that the Vendor will maintain.

d. A list of Subvendors by item supplied, used, or expected to be used on this contract; in addition, (unpriced) copies of all Purchase Orders or Requisitions issued to Subvendors shall be submitted to the Owner's Representative as soon as these become available.

The Owner's Representative will review the above documents and will provide comments if these do not comply with applicable requirements. The Vendor shall resolve all comments prior to commencing activities affected by these documents.

ATTACHMENT 1

DESIGN INFORMATION

FIRE PUMPS

		Electric	Diesel	Jockey
1.	Design Flow m^3/S (gpm) each	1.26×10^{-1} (2000)	1.26×10^{-1} 2000	1.26×10^{-3} (20)
2.	Rated Head m (ft)	76 (250)	76 (250)	76 (250)
3.	NPSH Available m (ft)	49 (160)	49 (160)	49 (160)
4.	Fluid Pumped	Water	Water	Water
5.	Specific Gravity	1.0	1.0	1.0
6.	Fluid Temp ^oC (^oF)	18.33 (65)	18.33 (65)	18.33 (65)
7.	Combustion Air ^oC (^oF)	N/A	5 (41) min 50 (122) max	N/A
8.	Base Plate Elev. Above Mean Sea Level m (ft)	40 (130)	40 (130)	40 (130)

ATTACHMENT 2

DESIGN INFORMATION REQUIRED

FIRE PUMPS AND ACCESSORIES

_____
(VENDOR'S NAME)

_____
(MANUFACTURER'S NAME)

_____
(QUOTATION NUMBER)

			Electric	Diesel	Jockey
1.	Manufacturer's Model Number		_____	_____	_____
2.	Pump Type		_____	_____	_____
3.	Impeller Type and Diameter,	/mm (in.)	___/___	___/___	_____
4.	Pump Speed at Design Conditions,	rpm	_____	_____	_____
5.	Design Capacity,	m^3/s (gpm)	_____	_____	_____
6.	TDH at Design Conditions,	m (ft)	_____	_____	_____
7.	Pump Efficiency at Design Conditions,	%	_____	_____	_____
8.	Driver Brake Horsepower Req'd. at Design Conditions,	Kw (bhp)	_____	_____	_____
9.	Shutoff Head,	m (ft)	_____	_____	_____
10.	Hydrostatic Test Pressure	kPa (psig)	_____	_____	_____
11.	Minimum Required Flow,	m^3/s (gpm)	_____	_____	_____
12.	Pump Shaft Diameter,	mm (in.)	_____	_____	_____
13.	Pump Suction Size, (flanged)	mm (in.)	_____	_____	_____

ATTACHMENT 2
DESIGN INFORMATION REQUIRED
(Continued)

			Electric	Diesel	Jockey
14.	Pump Discharge Size, (flanged)	mm (in.)	_____	_____	_____
15.	Shaft Critical Speed,	rpm	_____	_____	_____
16.	Materials: (Give ASTM Nos.):				
	a. Pump Casing		_____	_____	_____
	b. Impellers		_____	_____	_____
	c. Pump Shaft		_____	_____	_____
	d. Shaft Sleeves/Packing		_____	_____	_____
	e. Wear Ring Material (if installed)		_____	_____	_____
	f. Coupling, Make and Type		_____	_____	_____
	g. Baseplate		_____	_____	_____
	h. Type of Paint used for Primer and Finish Coats		_____	_____	_____
17.	Weights:				
	a. Total Pump Weight Including Motor Support,	Kg (lb)	_____	_____	_____
	b. Motor Controller	Kg (lb)	_____	_____	_____
18.	Lubrication, Grease:				
	a. Type		_____	_____	_____

ATTACHMENT 2
DESIGN INFORMATION REQUIRED
(Continued)

	Electric	Diesel	Jockey
19. Controller:			
a. Manufacturer	_____	_____	_____
b. Model Number	_____	_____	_____
c. Dimensions m (ft)	_____	_____	_____
d. Circuit-Breaker Interrupting Capacity	_____	_____	_____
e. Starting Method	_____	_____	_____
20. Spare Parts			
Itemized Description of Recommended Spare Parts (Use Additional Sheet if Required)	_____	_____	_____
21. Tools:			
List of Tools Furnished with Equipment	_____	_____	_____
	_____	_____	_____
	_____	_____	_____
	_____	_____	_____
22. Motor/Engine:			
a. Manufacturer	_____	_____	_____
b. Model Number	_____	_____	_____
c. Voltage	_____	_____	_____
d. Kilowatt (Horsepower)	____( )	____( )	____( )

ATTACHMENT 2
DESIGN INFORMATION REQUIRED
(Continued)

	Electric	Diesel	Jockey
23. Motor/Engine Selection Data:			
a. Motor/Engine Horsepower Kw (hp)	_____	_____	_____
b. Motor/Engine Speed at rated Loads, rpm	_____	_____	_____

ATTACHMENT 3

Refer to Electrical Motor Specifications E-1 and E-2.

ATTACHMENT 4

Refer to Electrical Motor Specifications E-1 and E-2.

LAKHRA POWER FEASIBILITY STUDY

SPECIFICATION M-16B

IN-PLANT AND YARD FIRE PROTECTION

LPS/2/B1491/D1

-145

SPECIFICATION M-16B

IN-PLANT AND YARD FIRE PROTECTION

TABLE OF CONTENTS

		Page
1.0	DESCRIPTION OF WORK	1
2.0	WORK INCLUDED	1
3.0	WORK NOT INCLUDED	1
4.0	APPLICABLE CODES AND STANDARDS	2
5.0	SUPPLEMENTAL DATA	2
6.0	VENDOR DATA	2
7.0	DESIGN REQUIREMENTS	3
8.0	PERFORMANCE REQUIREMENTS	6
9.0	MATERIAL OF CONSTRUCTION	7
10.0	FABRICATION REQUIREMENTS	8
11.0	INSTALLATION REQUIREMENTS	8
12.0	PERSONNEL REQURIEMENTS	8
13.0	INSPECTIONS AND TESTS	9
14.0	CLEANING CORROSION PROTECTION AND COATING	9
15.0	MARKING AND IDENTIFICATION	9
16.0	PACKAGING, SHIPPING, AND STORAGE	10
17.0	ACCEPTANCE CRITERIA	10

ATTACHMENTS

1. Halon Extinguishing System Functional Block Diagram
2. Design Data

LAKHRA POWER FEASIBILITY STUDY
IN-PLANT AND YARD FIRE PROTECTION

SPECIFICATION M-16B

1.0 DESCRIPTION OF WORK

1.1 Design, fabricate, install, and test for wet pipe sprinkler, deluge water spray, and Halon 1301 fire extinguishing systems, as specified herein. These systems will be for 2 x 350 MW power plants for the Water and Power Development Authority (WAPDA) to be located in Pakistan.

2.0 WORK INCLUDED

The work to be performed shall include but not be limited to the following:

2.1 Wet pipe sprinkler, pre-action and deluge water spray system(s) hydraulically designed, installed, and tested as described in this Specification and indicated on the Engineering Drawings, with the exception of any materials as may be noted in this Specification or on the Engineering Drawings to be "furnished by Others."

2.2 Total flooding Halon 1301 fire extinguishing systems including Halon storage cylinders, designed, installed and tested as described in this Specification and indicated on the Engineering drawings.

2.3 Provide technical direction services for installation, start-up, and system operation instruction.

2.4 Submit shop drawings of suppression systems being provided. Shop drawings shall include outline of hazard being protected, hydraulic calculations design data, types of fittings, pipe sizes, dimensional location of sprinklers, and pipe detector type and location, wiring and interconnection diagrams, and other information required by NFPA and the (Owner) (Owner's Engineer).

3.0 WORK NOT INCLUDED

The following work is not included in the requirements of this specification and will be performed by others:

3.1 The Owner will provide the water supply. The water supply described in Section 5.0 provides the pressure and flow profile in accordance with Attachment (later) at the interface point(s) shown on the Engineering Drawings.

3.2 The Owner will provide electrical power supplies of 400V ac, 3 phase, 50 hertz; 220V ac, 1 phase, 50 hertz; uninterruptable 125V dc.

4.0 APPLICABLE CODES AND STANDARDS

The latest revisions of the following codes and standards are applicable to the work specified herein:

4.1 National Fire Protection Association (NFPA) Standards

4.1.1 NFPA 13, Standard for the Installation of Sprinkler Systems.

4.1.2 NFPA 15, Standard for Water Spray Fixed Systems for Fire Protection.

4.1.3 NFPA 70, National Electric Code.

4.1.4 NFPA 72C, Remote Station Protective Signaling Systems.

4.1.5 NFPA 72D, Proprietary Protective Signaling Systems.

4.1.6 NFPA 72E, Automatic Fire Detectors.

5.0 SUPPLEMENTAL DATA

Fire protection water will be supplied by a fire pump with a flow rate of 126 ℓ/s (2,000 gpm). The normal system pressure at grade is 689 kPa (100 psig). Source of fire protection water will be from a 3,800 kiloliters (1,000,000 gallon) water tank located 30.4 m (100') above grade.

6.0 VENDOR DATA

6.1 The Vendor shall furnish the following information with the Proposal.

6.1.1 Submit to the (Owner) (Owner's Engineer) (Owner's Insurance Underwriter) for approval, shop drawings for the area(s) being protected. The shop drawings shall include hydraulic calculations, design data, types of fittings, pipe sizes, dimensional locations of sprinklers and pipe, and other information required by NFPA and the (Owner) (Owner's Engineer) (Owner's Insurance Underwriter) for a complete study, analysis and checking of the work to be provided.

6.1.2 Completed copies of all data sheets in Attachment 2 of this Specification, Price Summary Sheet in Section 1, and Exceptions, if any.

6.1.3 Exceptions to the Specification, if any.

6.1.4 The Vendor shall supply, with his proposal, pricing for 1 and 5 year supplies of spare parts.

6.2 After award of Contract, the Vendor shall submit the following:

6.2.1 Within 90 days, the Vendor shall furnish all necessary working drawings, hydraulic calculations, diagrams, details, and other information relative to the equipment included in the Proposal for approval.

6.2.2 Vendor information submitted for approval will be returned approved or with comments within 21 days after receipt by the Engineer.

6.2.3 Final submital of items in Section 6.2.1 will be submitted to the Engineer within 60 days after receipt of approved or with comments drawings by the Vendor. Two full size prints and two full size reproducibles of approved Vendor drawings, five sets of hydraulic calculation, (later) sets of installation, operation and maintenance manual, and all equipment and devices supplied by the Vendor shall be submitted.

7.0 DESIGN REQUIREMENTS

7.1 DELUGE WATER SPRAY SYSTEM

7.1.1 The Vendor shall hydraulically design, supply, erect, and test deluge water spray systems for each of the following hazards:

a. Hydrogen Seal Oil Unit.

b. Turbine Oil Reservoir.

c. ID and FD Fan Lube Oil Reservoir.

d. Oil Filled: Main, Start-up and Station Power Transformers.

e. Coal Handling Areas.

The systems shall be designed, installed, and tested in accordance with NFPA 15 and plant layout and Engineering Drawings included with this Specification.

7.1.2 The fire detection for the deluge water spray systems shall be a Class B thermistor sensor heat detector. Each lube oil system reservoir shall be monitored as a separate zone.

119

7.1.3 The deluge valve actuation shall be by either an electrical release (solenoid valve) and a manual emergency release located adjacent to the deluge valve. The solenoid valve shall be activated by an electrical signal from the local detection, monitoring, and control cabinet.

7.1.4 The deluge valves shall be supplied and installed complete with all trim piping, pressure gauges, and components required for operation.

7.1.5 All components used in the fire detection and deluge water spray systems shall be U.L. listed or F.M. approved.

7.2 WET PIPE AND PRE-ACTION SPRINKLER SYSTEMS

7.2.1 The Vendor shall hydraulically design, supply, erect, and test wet pipe sprinkler systmes for each of the following hazards:

Wet Pipe	Pre-Action
a. Diesel Generator Area	a. Turbine Generator Bearings
b. Cable Spreading Room	b. Boiler Feed Pumps
c. General Office Areas	c. Turbine Generator Governor Housing
d. Assembly/Meeting Rooms	
e. Main Fire Pump Room and Diesel Fire Pump Day Tank Area.	

The systems shall be designed, installed, and tested in accordance with NFPA 13.

7.2.2 The wet pipe and pre-action sprinkler system shall provide area protection with a design density of no less than .17ℓps/m^2 (0.25 gpm/sq ft) at the most hydraulically remote sprinkler.

7.2.3 The wet pipe valve shall be supplied and installed complete with all trim piping, pressure gauges, and components required for operation. The air supply to the valve location will be furnished by Others.

7.2.4 The pre-action sprinkler system shall be controlled by a normally closed pre-action valve which is actuated automatically by heat detectors.

450

7.2.5 Heat detectors for the pre-action system shall be Class B, thermistor sensor heat detectors. Each hazard shall be monitored as a separate zone.

7.2.6 All components used in the wet pipe sprinkler systems shall be U.L. listed or F.M. approved.

7.3 HALON 1301 SYSTEM

7.3.1 Total flooding Halon 1301 fire suppression systems are required for protection of the Control Room, and the Computer Room.

7.3.2 The Halon 1301 fire suppression systems shall be designed in accordance with the requirements of NFPA 12A and shall provide the following features:

a. Automatic release by cross-zoned ionization smoke detector, or local actuation pad, or manual station.

b. A connected reserve bank of cylinders providing second discharge.

c. Hazard alarm locally and annunciation at Main Control Room.

d. Delayed discharge of 15 seconds after automatic release only.

e. Pressure switch shutdown of electrical equipment. To be located at system discharge manifold to shutdown air moving, electrical and other similar equipment.

f. Pressure release. (QTY later) doors, (QTY later) dampers.

7.4 HALON DISTRIBUTION SYSTEM

Cylinders

The Halon 1301 storage cylinder assemblies shall be designed and filled in accordance with the requirements of NFPA 12 A. The cylinders shall be stored in supports designed to hold the cylinders securely in an upright position with clamps and straps. Where the quantity of Halon 1301 required to achieve the design concentration exceeds the capacity of a single cylinder, cylinders shall be manifolded to provide the total Halon requirements. The cylinders shall be equipped with pressure gauge, pressure transmitter, and recorder to indicate stored pressure and with a capability to annunciate a predetermined minimum pressure level.

7.5 SUPERVISORY CONTROL PANELS

7.5.1 A supervisory control panel shall be provided for each system hazard. Controls for more than one hazard may be combined in one panel if the hazards are in close proximity 15m (50 ft) radius) and within sight from each other. Design of the control panels shall be in accordance with NFPA 72A, and NFPA 72C. All panels shall be U.L. listed and/or FM approved.

7.5.2 Supervisory control panel for deluge water spray and pre-action sprinkler systems shall include status lights, manual electric release, visual and audible alarm for fire and system trouble, and provisions for remote functions such as:

a. Pre-alarm annunciation.

b. Alarm annunciation.

c. Trouble annunciation.

7.5.3 Supervisory control panel is not required for the wet pipe sprinkler system. However, auxiliary contacts shall be provided at the water motor alarm for remote annunciation.

7.5.4 Supervisory control panel for the Halon 1301 system shall include status lights, visual and audible alarms for fire and system trouble, manual release, abort system, and provisions for remote functions such as:

a. De-energize HVAC system and close isolation dampers upon discharge of Halon.

b. Alarm annunciation.

c. Trouble annunciation.

8.0 PERFORMANCE REQUIREMENTS

8.1 The Vendor shall warrant that the equipment to be furnished is free of all defects in workmanship and material. The foregoing warranty shall continue for a period of 1 year from and after the date of initial operation of the equipment. As used herein, the term "date of initial operation of the equipment" means the day on which the equipment is first operated as an integral part of the Owner's Plant. This warranty shall apply to materials and labor supplied by the Vendor and to materials furnished to the Vendor by Subvendors.

8.2 The repair, replacement, or relocation of any equipment or piping due to defective workmanship, materials, or installation shall be borne by the Vendor without cost to the Owner. These costs shall apply to materials and labor supplied by the Vendor and to materials furnished to the Vendor by Subvendors.

8.3 DELUGE SYSTEM

8.3.1 The Vendor shall perform an in-service full flow test of each deluge system. During the full flow test, the Vendor shall check to ensure proper nozzle layout and discharge pattern, and for any obstruction.

8.4 HALON 1301 SYSTEM

8.4.1 Storage containers and system piping shall be tested in accordance with NFPA 12A.

The Vendor shall guarantee the performance of all systems furnished in accordance with the acceptance criteria, Section 17.0 of this Specification.

9.0 MATERIAL OF CONSTRUCTION

9.1 Wet pipe and deluge system piping materials shall be as follows:

9.1.1 All exterior piping shall be ASTM A-120 standard weight seamless galvanized steel pipe with galvanized malleable iron fittings.

9.1.2 All interior piping shall be ASTM A-53 or ASTM A-120 Grade B standard weight seamless black steel pipe with mallable iron fittings.

9.1.3 All piping and fittings shall be designed for a minimum working pressure of not less than 1,034 kPa (150 psig).

9.1.4 All piping 65 mm (2 1/2") and larger may be installed using Victaulic couplings and fittings. All piping 50 mm (2") and smaller shall have screwed connections and fittings.

9.1.5 All the materials supplied shall be new and be the standard products of the manufacturer. Wherever applicable, Underwriter's Laboratories listed Factory Mutual approved equipment shall be used.

9.2 Halon 1301 system piping material shall be as follows:

9.2.1 Halon discharge piping: ASTM A-53 or A-106, ANSI B36.10. Steel piping conforming to ASTM A-120 is not acceptable.

9.2.2 Pipe size 100 mm (4") and Smaller: Schedule 40.

9.2.3 Piping Joints: Screwed. Pipe fittings shall be ASTM A-197 malleable iron, 300 lb class only.

9.3 Hangers and supports shall comply with perspective NFPA Code.

9.4 The heat detectors shall be Alison 9090 Series Thermistor Sensor. The control system for the water extinguishing system shall be Alison Series A888, or Engineer approved equal.

9.5 The Halon 801 distribution and control system shall be as supplied by Chemetron Fire Systems or Engineer approved equal.

10.0 FABRICATION REQUIREMENTS

The Vendor shall use his standard fabrication procedures in the manufacture of Vendor manufactured equipment.

11.0 INSTALLATION REQUIREMENTS

11.1 WET PIPE, PRE-ACTION AND DELUGE SYSTEMS

The wet pipe and deluge systems shall be installed in accordance to the guidelines of NFPA 13 and 15.

11.2 HALON 1301 SYSTEMS

The Halon 1301 systems shall be installed in accordance to the guidelines of NFPA 12A.

11.3 Provision shall be made such that all water spray piping would allow for servicing or removal of the protected equipment.

11.3 For all Vendor furnished pipes that penetrate rated fire walls or floors, the Vendor shall provide and install a fire retardant seal such as Thunderline Corporation's Pyro-Pac Linkseal, or Engineer approved equal. For nonrated walls, seal shall be standard link seal.

12.0 PERSONNEL REQUIREMENTS

The Vendor shall provide a field engineer to supervise the installation check for completion of all systems and conduct

the testing and the placing-in-service of each of the fire protection systems.

13.0 INSPECTIONS AND TESTS

13.1 Upon completion of installation, all protection systems shall be inspected by a competent representative of the Vendor, to ensure that system piping is installed according to the approved shop drawings.

13.2 Hydrostatic and full flow test shall be performed for all water extinguishing systems in accordance with NFPA 13 and 15. Test shall include ensuring proper operation of local and remote alarms, automatic and manual actuation device, trouble indicators and all associated controls.

13.3 Halon systems shall be tested in accordance with NFPA 12A. Test shall include complete discharge into protected areas. Instruments shall be provided to measure and record discharge time, concentration achieved, agent distribution, and hold time.

13.3.1 Vendor may use either CO_2, Freon 12, or Halon 1301 as agent for test. Vendor shall supply agent used. If Halon is used, it shall be restored to full capacity.

13.4 Certified test and inspection results shall be provided upon completion of the tests.

14.0 CLEANING, CORROSION PROTECTION, AND COATING

Cleaning, corrosion protection, and coating of furnished materials shall be the manufacturer's standard.

15.0 MARKING AND IDENTIFICATION

15.1 All deluge and wet pipe valve and Halon control stations shall be marked and identified as such. Manual release control of each deluge valve and Halon System shall be marked and identified.

15.2 Supervisory control panels, associated built-in and remote visual and audible alarms shall be labeled with engraved laminated plastic nameplates, with white characters on black background with beveled edges.

15.3 Signs shall be made for the rooms protected with Halon 1301 to announce that the respective room is protected by such system, including brief instructions for evacuation.

16.0 PACKAGING, SHIPPING, AND STORAGE

16.1 All materials shall be securely packaged giving due consideration to conditions expected for overseas transport. Packaging of materials subject to corrosion shall be sealed for protection against salt water moisture during shipment.

16.2 In packaging the materials, the Vendor shall assume that no enclosed storage facility will be provided at the jobsite. Therefore, packaging should withstand exposure if kept outdoors for at least 1 year.

17.0 ACCEPTANCE CRITERIA

17.1 Systems acceptance test shall be in accordance with NFPA 12A, 13 and 15 and performed after completion of installation prior to releasing the systems to the Owner.

17.2 Equipment, material, workmanship, and system performance which does not meet the requirements of this Specification, applicable NFPA Codes, or Vendor drawings will be rejected by the Owner, unless corrected by the Vendor. Cost for such repair or correction shall be borne by the Vendor.

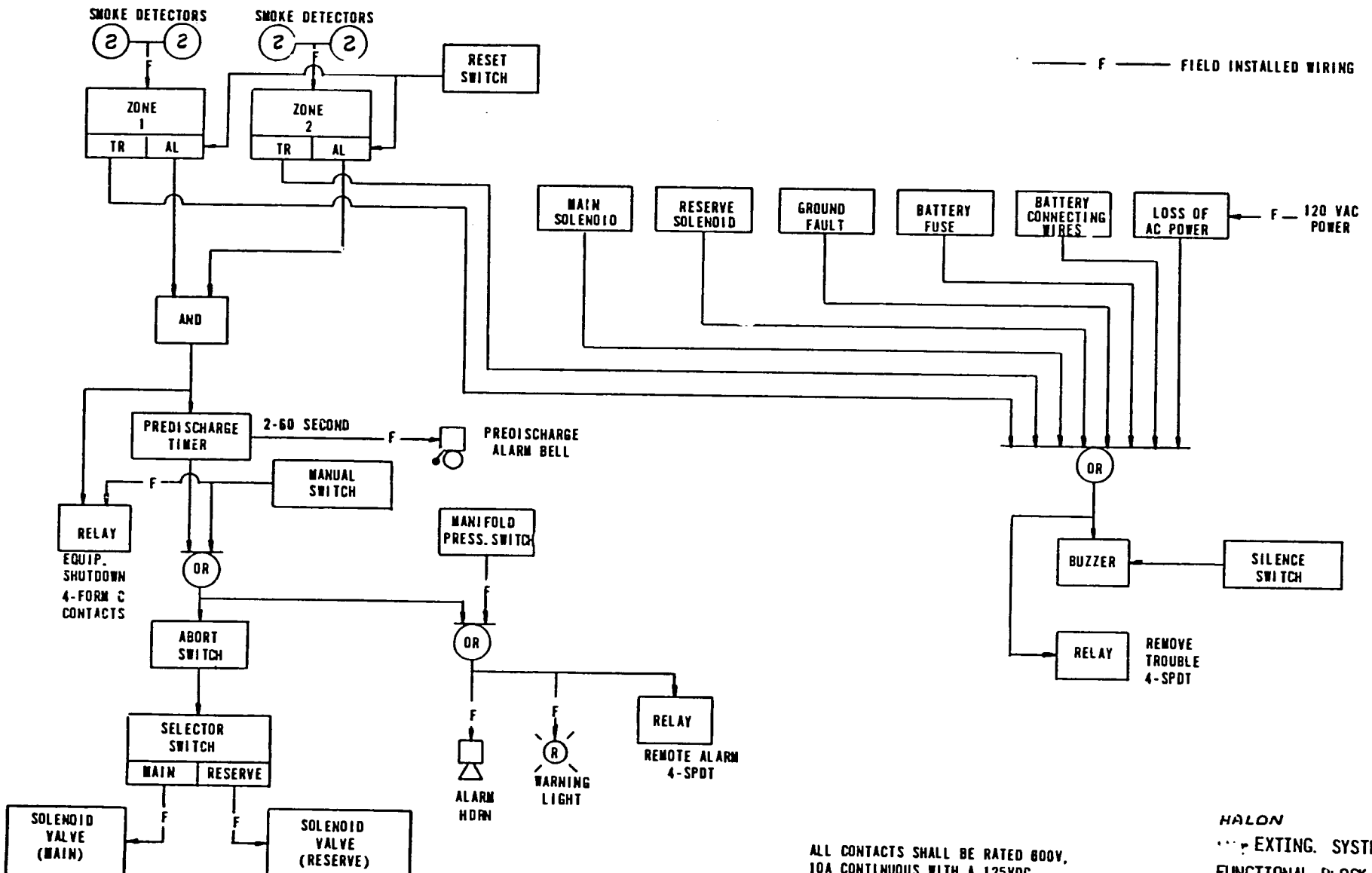

ALL CONTACTS SHALL BE RATED 600V, 10A CONTINUOUS WITH A 125VDC MAKE AND BREAK RATING OF 1A

HALON
EXTING. SYSTEM
FUNCTIONAL BLOCK DIAGRAM

ATTACHMENT 1

4-27

ATTACHMENT 2

INPLANT AND YARD FIRE PROTECTION SYSTEMS

LAKHRA POWER FEASIBILITY STUDY
SPECIFICATION M-16B

DESIGN DATA

1. Deluge System Hydrualic Requirements

	Flowrate Required at Entrance to Deluge Valve, l/s gpm	Pressure at Entrance to Deluge Valve, kPa (psig)	Size of Deluge Valve, mm (inch)
a. Hydrogen Seal Oil	_____	689 (100)	_____
b. Turbine Oil Reservior	_____	689 (100)	_____
c. ID and FD Fan Lube Oil Reservoir	_____	689 (100)	_____
d. Transformers: Main	_____	689 (100)	_____
Start-up	_____	689 (100)	_____
Station Power	_____	689 (100)	_____
e. Coal Handling Area	_____	689 (100)	_____

2. Wet Pipe System Hydraulic Requirements

	Flowrate Required at Most Remote 139 m^2 (1,500 sq ft), l/s (gpm)	Pressure at Entrance to Alarm Check Valve, kPa (psig)	Size of Alarm Check Valve mm (inch)
a. Diesel Gen. Area	_____	689 (100)	_____
b. Cable Spreading Rm.	_____	689 (100)	_____
c. Office Area	_____	689 (100)	_____

ATTACHMENT 2
(Continued)

	Flowrate Required at Most Remote 139 m^2 (1,500 sq ft), l/s (gpm)	Pressure at Entrance to Alarm Check Valve, kPa (psig)	Size of Alarm Check Valve mm (inch)
d. Assembly/Meeting Rm.	_____	689 (100)	_____
e. Main Fire Pump Rm./ Day Tank Area	_____	689 (100)	_____

3. Preaction System Hydraulic Requirements

	Flowrate Required at Most Remote 139 m^2 (1,500 sq ft), l/s (gpm)	Pressure at Entrance to Preaction Valve, kPa (psig)	Size of Preaction Valve mm (inch)
a. Turbine Generator Bearings	_____	_____	_____
b. Boiler Feed Pumps	_____	_____	_____
c. Turbine Generator Governor Housing	_____	_____	_____