PN-ABF-015

# Pakistan Water and Power Development Authority

# Lakhra Coal Mine and Power Generation Feasibility Study

# Power Plant Feasibility

## Volume I

January 1986

Sponsored by

United States Agency for International Development

Prepared by

Gilbert/Commonwealth International, Inc.

Peter Bloom, AID/Washington
D. Matheson

**Gilbert/Commonwealth International, Inc.** engineers and consultants

P.O. Box 1498, Reading, Pennsylvania 19603/Telephone 215-775-2600, Cable Gilasoc/Telex 836-431

391-0487

May 5, 1987
G/C-USAID-040

Reply to Jackson office:
209 E. Washington Avenue
Jackson, Michigan 49201
Telephone: (517) 788-3000
Telex: 215-017, Answerback COMASUR

LAKHRA POWER PLANT
FEASIBILITY STUDY
FINAL REPORT - CHAPTER 3

Mr. John Morgan
Deputy Chief, Energy and Environment
USAID/Pakistan
18-6th Avenue, Ramna 5
Islamabad, Pakistan

Dear Mr. Morgan:

My letter, G/C-USAID-035 dated July 15, 1986, transmitted to you the final report for the Lakhra Plant Feasibility Study. As stated in the referenced letter, Chapter 3 "System Planning and Cost Analysis" was not included due to a series of WASP runs being conducted at that time. Subsequently, the WASP runs have been completed and a draft of Chapter 3 has been reviewd and commented upon by USAID and WAPDA. This transmittal is in accordance with your telex to me dated March 31, 1987. It contains:

1) A revised Table of Contents,
2) Chapter 3 in its entirety (please insert in Volume I behind Tab 3),
3) Chapter 10 in its entirety (please destroy previous Chapter 10 of Volume III and insert behind Tab 10),
4) Volume X which contains the Appendices for Chapter 3 (this is being transmitted to USAID, Pakistan and WAPDA only).

By copy of this letter, I am distributing these additions in accordance with your request as follows:

| Recipient | Number of Copies Chapter 3, 10, & TOC | Volume X |
|---|---|---|
| USAID/Pakistan | 24 | 5 |
| WAPDA/Lahore | 10 | 5 |
| Robert Ichord, AID/Washington | 1 | |

May 5, 1987
G/C-USAID-040
Page Two

| Recipient | Number of Copies Chapter 3, 10, & TOC | Volume X |
|---|---|---|
| Peter Bloom, AID/Washington | 1 | |
| James Sullivan, S&T/EY, AID/W | 1 | |
| Ibrahim Elwan, World Bank/ Washington | 1 | |
| Paul Dyson, World Bank/ Washington | 1 | |
| Bernard Baratz, World Bank/ Washington | 1 | |
| Akira Tsusaka, Asian Development Bank/Manila | 1 | |
| Allen Burrell, Asian Development Bank/Manila | 1 | |
| Clifford R. Miercourt, North American Coal Corporation | 1 | |
| Henry Townsend, Bechtel Western Power Company | 1 | |
| Maurice Francois, CDF International | 1 | |
| Kenneth A. Schweers, ICF/W | 1 | |
| John T. Boyd Company | 1 | |
| John Mobsby, Bank of America International | 1 | |
| Ken Kosky, KBN | 1 | |
| Steve Legore, ESE | 1 | |

If you have any questions or comments please feel free to contact me.

Yours very truly,

R G Fuller

R. G. Fuller, P.E.
Project Manager

RGF/ss

# LAKHRA COAL MINE AND POWER GENERATION FEASIBILITY STUDY

## POWER PLANT FEASIBILITY

## VOLUME I

Submitted to

U.S. AGENCY FOR INTERNATIONAL DEVELOPMENT

and

PAKISTAN WATER AND POWER DEVELOPMENT AUTHORITY

By

Gilbert/Commonwealth International, Inc.
209 East Washington Avenue
Jackson, Michigan 49201

R-2748

January, 1986

LAKHRA POWER FEASIBILITY STUDY

TABLE OF CONTENTS


| | | Page |
|---|---|---|
| VOLUME I | | |
| | EXECUTIVE SUMMARY | |
| 1.0 | INTRODUCTION | 1-1 |
| 2.0 | SCOPE OF STUDY | 2-1 |
| 3.0 | SYSTEM PLANNING AND COST ANALYSIS | 3-1 |
| 3.1 | FIRST AND SECOND SERIES OF GENERATION PLANNING STUDIES | 3-1 |
| 3.2 | THIRD SERIES OF GENERATION PLANNING STUDIES | 3-3 |
| 3.2.1 | Load Forecast | 3-3 |
| 3.2.2 | Fuel Costs | 3-3 |
| 3.2.3 | Existing and Committed Future Generation Capacity | 3-4 |
| 3.2.4 | Candidates for Future Generation Capacity | 3-4 |
| 3.2.5 | Capital Costs | 3-5 |
| 3.2.6 | Least Cost Generation Expansion Plan (Base Cases) | 3-5 |
| 3.2.7 | Coal Consumption | 3-7 |
| 3.2.8 | Capacity Factor | 3-7 |
| 3.2.9 | Sensitivity Studies | 3-8 |
| 3.2.10 | Conclusions | 3-10 |
| 3.3 | LAKHRA TRANSMISSION SYSTEM STUDIES | 3-11 |
| 3.3.1 | Background | 3-11 |
| 3.3.2 | Study Parameters | 3-12 |
| 3.3.3 | Transmission System Planning Criteria | 3-12 |
| 3.3.4 | Primary Transmission System Development | 3-14 |

**LAKHRA POWER FEASIBILITY STUDY**

TABLE OF CONTENTS
(Continued)


| | | Page |
|---|---|---|
| 3.3.5 | Transmission Alternatives | 3-15 |
| 3.3.6 | Power Flow Analysis | 3-16 |
| 3.3.7 | Transient Stability Analysis | 3-18 |
| 3.3.8 | Short Circuit Analysis | 3-19 |
| 3.3.9 | Capital Costs | 3-19 |
| 3.3.10 | Economic Comparison | 3-20 |
| 3.3.11 | Conclusions and Recommendations of the Lakhra Transmission System Studies | 3-20 |
| 3.3.12 | Facilities for Supply of Mining Colony and Construction Loads | 3-21 |
| 3.3.13 | Plant and Transmission Costs | 3-24 |
| 3.4 | IMPORTED COAL TRANSMISSION STUDIES | 3-25 |
| 3.4.1 | Purpose | 3-25 |
| 3.4.2 | Background | 3-25 |
| 3.4.3 | Assumptions | 3-26 |
| 3.4.4 | Transmission Alternatives | 3-26 |
| 3.4.5 | Power Flow Analysis | 3-27 |
| 3.4.6 | Transient Stability Analysis | 3-27 |
| 3.4.7 | Cost Estimates | 3-28 |
| 3.4.8 | Economic Comparison | 3-28 |
| 3.4.9 | Conclusions | 3-28 |
| 4.0 | LAKHRA COAL CHARACTERISTICS | 4-1 |
| 4.1 | FUEL ANALYSES | 4-1 |
| 4.2 | COAL WASHABILITY ANALYSIS | 4-9 |

LAKHRA POWER FEASIBILITY STUDY

TABLE OF CONTENTS
(Continued)


| | | Page |
|---|---|---|
| 4.3 | FUEL SAMPLE COLLECTION AND SHIPMENT | 4-21 |
| 4.4 | TEST BURN, BASELINE PMDC NO. 2 | 4-31 |
| 4.5 | TEST BURN, WASHED PMDC NO. 2 | 4-39 |
| 4.6 | TEST BURN, BT-11 TEST SHAFT | 4-44 |
| 4.7 | INVESTIGATION, "SIMILAR" ASH COAL TO LAKHRA ASH COAL | 4-48 |
| 4.8 | BOILER DESIGN PARAMETERS FOR LAKHRA COAL | 4-65 |
| 5.0 | POWER PLANT DESIGN CHARACTERISTICS | 5-1 |
| 5.1 | GENERAL | 5-1 |
| 5.2 | SITE SURVEYS | 5-1 |
| 5.3 | SITE PLANS | 5-6 |
| 5.4 | ENVIRONMENTAL GUIDELINES | 5-11 |
| 5.5 | BASIS OF DESIGN ANALYSIS (BODA) | 5-56 |
| 5.5.1 | Plant Layouts | 5-56 |
| 5.5.2 | Soils/Rock, Water, Climate Characterization | 5-74 |
| 5.5.3 | Fuel, Chemical, Raw Material, Wastewater Requirements | 5-81 |
| 5.5.4 | System Design | 5-82 |
| 5.5.5 | Equipment Specifications | 5-85 |
| 5.5.6 | Analysis of Environmental Control Technologies | 5-87 |
| 5.5.7 | Availability | 5-99 |
| 5.5.8 | Alternative Fuel Capabilities | 5-103 |
| 5.5.9 | Cooling Tower Considerations | 5-108 |
| 5.6 | CONSTRUCTION PHASE AND SCHEDULE CONSIDERATIONS | 5-110 |

LAKHRA POWER FEASIBILITY STUDY

TABLE OF CONTENTS
(Continued)


| | | Page |
|---|---|---|
| VOLUME II | | |
| 6.0 | INSTITUTIONAL DEVELOPMENT | 6-1 |
| 6.1 | INTRODUCTION | 6-1 |
| 6.2 | COAL POWER PROJECTS DEPARTMENT | 6-6 |
| 6.3 | PROJECT ORGANIZATION (DESIGN AND CONSTRUCTION) | 6-56 |
| 6.4 | PROJECT ORGANIZATION (START-UP AND TEST) | 6-65 |
| 6.5 | STATION ORGANIZATION (OPERATION AND MAINTENANCE) | 6-71 |
| | APPENDIX 6.1 - Organization Chart | 6-91 |
| | APPENDIX 6.2 - Job Descriptions | 6-95 |
| | APPENDIX 6.3 - Guidelines for Evaluation of Project Organizations, Major Construction Projects, and Support of Operations and Maintenance Activities | 6-199 |
| | APPENDIX 6.4 - G/C CUE | 6-281 |
| 7.0 | TRAINING | 7-1 |
| 7.1 | INTRODUCTION | 7-1 |
| 7.2 | WAPDA TRAINING CAPABILITIES AND ORGANIZATION | 7-1 |
| | 7.2.1 Approach | 7-1 |
| | 7.2.2 WAPDA Academy | 7-2 |
| | 7.2.3 WAPDA Training Institutes | 7-3 |

LAKHRA POWER FEASIBILITY STUDY

TABLE OF CONTENTS
(Continued)


| | | Page |
|---|---|---|
| 7.3 | TRAINING NEEDS ASSESSMENT | 7-6 |
| | 7.3.1 Approach | 7-6 |
| | 7.3.2 Coal Power Projects Department | 7-7 |
| | 7.3.3 Thermal Power Station Organization | 7-8 |
| | 7.3.4 Training Institute Organization | 7-10 |
| 7.4 | PRELIMINARY TRAINING PLAN | 7-11 |
| | 7.4.1 Organization | 7-11 |
| | 7.4.2 Plan | 7-15 |
| | 7.4.3 Estimated Cost | 7-19 |
| | APPENDIX 7.1 - Training Course Outlines | 7-25 |
| | APPENDIX 7.2 - Extract from PC-II Proforma; Training of WAPDA Officers 1985: Foreign Training Requirements of Generation | 7-145 |
| | APPENDIX 7.3 - Extract from USAID Participant Training Plans (Lakhra); FY-1985, Coal Power Station Proposed Training Fields | 7-149 |

VOLUME III

| | | |
|---|---|---|
| 8.0 | CAPITAL COSTS OF POWER PLANT | 8-1 |
| 8.1 | ESTIMATE BASIS | 8-2 |
| 8.2 | EXCLUSIONS | 8-8 |

## LAKHRA POWER FEASIBILITY STUDY

### TABLE OF CONTENTS
(Continued)


| | | Page |
|---|---|---|
| VOLUME III (Continued) | | |
| 8.3 | CAPITAL COST ANALYSIS | 8-8 |
| 8.4 | COAL WASHING - POWER PLANT COST REDUCTION | 8-9 |
| 8.5 | FLUE GAS DESULFURIZATION OPTIONS | 8-10 |
| 8.6 | OPERATION AND MAINTENANCE | 8-11 |
| 8.7 | PRODUCTION EXPENSES | 8-11 |
| | APPENDIX 8.1 - Cost Details for the Lakhra Site | 8-65 |
| | APPENDIX 8.2 - Cost Comparison of Various Sized Power Plants | 8-87 |
| | APPENDIX 8.3 - Cost Sensitivity Analysis, Lakhra Unit 1 | 8-89 |
| | APPENDIX 8.4 - Cost Sensitivity Analysis, Lakhra Unit 2 | 8-93 |
| 9.0 | INFRASTRUCTURE | 9-1 |
| 9.1 | LOCAL POPULATION GROWTH | 9-1 |
| 9.2 | HOUSING | 9-6 |
| 9.3 | HEALTH CARE | 9-8 |
| 9.4 | EDUCATION | 9-9 |
| 9.5 | POLICE PROTECTION | 9-11 |

## LAKHRA POWER FEASIBILITY STUDY

### TABLE OF CONTENTS
(Continued)


| | | Page |
|---|---|---|
| 9.6 | TRANSPORTATION | 9-12 |
| 9.7 | TELECOMMUNICATIONS | 9-17 |
| 9.8 | COSTS AND REVENUES TO LOCAL GOVERNMENTS | 9-22 |
| | APPENDIX 9.1 - Requested Telecommunication Services for the Jamshoro Power Plant | 9-27 |
| | APPENDIX 9.2 - TIP General Products Brochures | 9-29 |
| 10.0 | CONCLUSIONS | 10-1 |
| 11.0 | RECOMMENDATIONS | 11-1 |

**VOLUME IV**

APPENDIX A - SPECIFICATIONS

MATERIAL SPECIFICATIONS

Chemicals
No. 2 Fuel Oil
No. 6 Fuel Oil
Limestone

MECHANICAL SPECIFICATIONS

M-1 Boiler Island
M-2 Turbine Generators and Accessories
M-3 Condenser
M-4A Electrostatic Precipitator
M-4B Wet Flue Gas Desulfurization System

**LAKHRA POWER FEASIBILITY STUDY**

**TABLE OF CONTENTS**
(Continued)

**VOLUME V**

APPENDIX A - SPECIFICATIONS

MECHANICAL SPECIFICATIONS

M-5 Feedwater Heaters
M-6 Deaerator
M-7 Motor Driven Boiler Feed Pumps
M-8 Condensate Pumps
M-9 Circulating Water Pumps
M-10 Mechanical Draft Cooling Tower
M-11 Cycle Make-up Demineralizer System
M-12A Wastewater Treatment Equipment
M-12B Sanitary Wastewater Treatment System
M-13 High Pressure Power Piping and Hangers
M-14 Fly Ash Handling System (Vacuum Type)
M-15 Closed Circuit Cooling Water Heat Exchangers
M-16A Diesel Engine and Electric Motor Driven Fire Pump and Accessories
M-16B In-Plant and Yard Fire Protection

**VOLUME VI**

APPENDIX A - SPECIFICATIONS

MECHANICAL SPECIFICATIONS

M-17 Low Pressure Piping
M-18 Traveling Water Screens

CIVIL/STRUCTURAL SPECIFICATIONS

S-1A Supply of Concrete
S-1B Concrete Work
S-2 Structural Steel
S-3 Turbine Room Overhead Crane
S-4 Coal Handling System
S-5 Circulating Water Piping
S-6 Reinforced Concrete Chimney with Brick Liners

**LAKHRA POWER FEASIBILITY STUDY**

**TABLE OF CONTENTS**
(Continued)


ELECTRICAL SPECIFICATIONS

E-1 Motors Under 200 KW
E-2 Motors 200 KW and Over
E-3 Medium Voltage Switchgear
E-4 Motor Control Centers
E-5 Diesel Generator
E-6 Auxiliary Power Transformer
E-7 Step-Up Transformer

INSTRUMENTATION AND CONTROL SPECIFICATIONS

I-1 Instrumentation and Control System

**VOLUME VII**

APPENDIX B - DRAWINGS

SITE ARRANGEMENTS

Figure 5.3-1 Khanot Site, Plant Site General Arrangement
Figure 5.3-2 Khanot Site General Arrangement
Figure 5.3-3 Lakhra Site, Plant Site General Arrangement
Figure 5.3-4 Lakhra Site, General Arrangement

PLANT ARRANGEMENTS

Figure 5.5.1-1 Ground Floor Plan
Figure 5.5.1-2 Mezzanine Floor and Misc. Floor Plans
Figure 5.5.1-3 Operating Floor Plan
Figure 5.5.1-4 Plant Cross Section
Figure 5.5.1-5 Longitudinal Cross Section

FLOW DIAGRAMS

Figure 5.5.3-1 Water Balance Diagram
Figure 5.5.3-2 Material Balance Diagram
Figure 5.5.4I-1 Turbine Heat Balance, SI Units
Figure 5.5.4I-2 Turbine Heat Balance, SI Units
Figure 5.5.4I-3 Turbine Heat Balance, English Units
Figure 5.5.4I-4 Turbine Heat Balance, English Units
Figure 5.5.4IX-1 Water Treatment Diagram
Figure 5.5.4XI-1 Auxiliary Steam Diagram
Figure 5.5.4XII-1 Compressed Air Diagram
Figure 5.5.4XVI-1 Fire Protection System Diagram
Figure 5.5.4XX-1 Coal Flow Diagram
Figure 5.5.4XX-1a Inplant Coal Flow Diagram

## LAKHRA POWER FEASIBILITY STUDY

### TABLE OF CONTENTS
(Continued)

SINGLE LINE DIAGRAMS

Figure 5.5.4XXI-1 Generator and Station Power
Figure 5.5.4XXII-1 Emergency Power System

**VOLUME VIII**

APPENDIX C - SUPPLEMENTAL REPORTS

Roberts & Schaefer Co. Coal Washability Analysis

GCII Geotechnical Investigation

WAPDA Ground Water Resistivity Survey at Khanot

APPENDIX D - WORK PLAN

**VOLUME IX**

COMBUSTION ENGINEERING TEST REPORTS

**VOLUME X**

| | | |
|---|---|---|
| APPENDIX 3.1 | Summary Report Case 31, 1 x 250 MW Lakhra Power Plant Fueled with Underground Mined Coal with $16 per Barrel Oil in 1991 | 3.1-1 |
| APPENDIX 3.2 | Summary Report Case 32, 2 x 275 MW Lakhra Power Plant Fueled with Surface Mined Coal with $16 per Barrel Oil in 1991 | 3.2-1 |
| APPENDIX 3.3 | Summary Report Sensitivity Case 3A, 2 x 275 MW Lakhra Power Plant Fueled with Surface Mined Coal with $24 per Barrel Oil in 1991 | 3.3-1 |
| APPENDIX 3.4 | Load Flow and Transient Stability Plots | 3.4-1 |
| APPENDIX 3.5 | Transmission System Cost Estimate | 3.5-1 |
| APPENDIX 3.6 | Post Study Revisions | 3.6-1 |

## LIST OF TABLES


| Number | | Page |
|---|---|---|
| 4.1-1 | Fuel Analyses | 4-87 |
| 4.1-2 | Composite Drill Core Analyses, Unwashed Coal (Boiler Specification Basis) | 4-89 |
| 4.2-1 | Effects of Total Cleaning on Ash/Sulfur Removal and Btu Recovery (Seam Only) | 4-90 |
| 4.2-2 | Effects of Total Cleaning on Ash/Sulfur Removal and Btu Recovery (Seam + 10% Dilution) | 4-91 |
| 4.2-3 | Effects of Partial Cleaning on Ash/Sulfur Removal and Btu Recovery (Seam Only - 4" x 1/2" Cleaned, 1/2" x 0 Raw) | 4-92 |
| 4.2-4 | Effects of Air Drying on Ash/Sulfur Removal and Btu Recovery | 4-93 |
| 4.2-5 | Effects of Size Reduction on Ash/Sulfur Removal and Btu Recovery | 4-94 |
| 4.2-6 | Summary of Whole Coal Analyses | 4-95 |
| 4.2-7 | Raw Vs. Clean Indices | 4-96 |
| 4.2-8 | Sample Summary | 4-97 |
| 4.2-9 | Distribution Curve Determination | 4-98 |
| 4.2-10 | Summary of Whole Coal Analyses (Plant Run) | 4-99 |
| 4.2-11 | Raw Vs. Clean Indices (Plant Run) | 4-100 |
| 4.2-12 | Mass Balance Measurements and Determination | 4-101 |
| 4.4-1 | Test Fuel Analyses | 4-102 |
| 4.4-2 | Preliminary FPTF Results - Pulverization Characteristics | 4-103 |
| 4.4-3 | Lakhra Baseline Coal Evaluation Test Matrix | 4-104 |
| 4.4-4 | Preliminary FPTF Results - Relative Combustion Characteristics | 4-105 |

## LIST OF TABLES (Continued)


| Number | | Page |
|---|---|---|
| 4.4-5 | Preliminary FPTF Results - Furnace Slagging Characteristics | 4-106 |
| 4.4-6 | Lakhra Baseline Coal Furnace Slagging Results | 4-107 |
| 4.4-7 | Preliminary FPTF Results - Convective Pass Fouling Characteristics | 4-108 |
| 4.4-8 | Preliminary FPTF Results - In-Situ Fly Ash Resistivity Measurement | 4-109 |
| 4.4-9 | Preliminary FPTF Results - Ash Loading, Gas Velocity, Erosion Rate | 4-110 |
| 4.4-10 | Lakhra Coal Corrosion Probe Results | 4-111 |
| 4.5-1 | Test Fuel Analysis for Lakhra Washed and Baseline Coal | 4-112 |
| 4.5-2 | Preliminary FPTF Pulverization Results - Pulverization Characteristics | 4-113 |
| 4.5-3 | Lakhra Washed Test Matrix | 4-114 |
| 4.5-4 | Preliminary FPTF Results - Relative Combustion Characteristics | 4-115 |
| 4.5-5 | Preliminary FPTF Results - Furnace Slagging Characteristics | 4-116 |
| 4.5-6 | Lakhra Washed Coal Characterization, FPTF Slagging Results | 4-117 |
| 4.5-7 | Preliminary FPTF Results - Convective Pass Fouling Characteristics | 4-118 |
| 4.5-8 | Preliminary FPTF Results - In-Situ Fly Ash Resistivity Measurement | 4-119 |
| 4.6-1 | Lakhra Coal Performance Characteristics | 4-120 |
| 4.6-2 | Lakhra Coal Sample Analyses | 4-121 |
| 4.7-1 | Similar Ash Coal Comparison | 4-123 |
| 5.4-1 | World Bank $SO_2$ Emissions Criteria | 5-44 |

## LIST OF TABLES (Continued)


| Number | | Page |
|---|---|---|
| 5.4-2 | Threshold Limit Values (TLV) for Dusts | 5-45 |
| 5.4-3 | Summary of Major Power Plant Wastewater Discharges | 5-47 |
| 5.4-4 | Selected Pollutants Often Associated with Power Plant Waste Streams | 5-48 |
| 5.4-5 | Effluent Guidelines for Power Plant Wastewater Discharge to Surface Waters | 5-50 |
| 5.4-6 | Guidelines for Drinking Water Quality (World Health Organization - 1984) | 5-52 |
| 5.5.2-1 | Ground Water Quality | 5-77 |
| 5.5.2-2 | Water Quality of Indus River | 5-78 |
| 5.5.2-3 | Discharge Characteristics of Indus River at Sehwan for the Years 1972-75 and 1979 | 5-79 |
| 5.5.2-4 | Meteorological Summary Data from Hyderabad (1931-1960) | 5-80 |
| 6.5.4-1 | Staffing Plan | 6-76 |
| 7.2.3 | Training Courses Administered at Guddu Training Center | 7-5 |
| 7.4.1 | System Design Descriptions | 7-14 |
| 7.4.3 (a) | Estimated Cost of Module 1000 Training Courses | 7-20 |
| 7.4.3 (b) | Estimated Cost of Module 2000 Training Courses | 7-21 |
| 7.4.3 (c) | Estimated Cost of Module 3000 Training Courses | 7-22 |
| 7.4.3.(d) | Estimated Cost of Module 4000 Training Courses | 7-23 |
| 8.1 | Cost Summary Without Import Duty for Lakhra Units 1 and 2 in U.S. Dollars | 8-15 |
| 8.2 | Cost Summary Without Import Duty for Lakhra Units 1 and 2 in Rupees | 8-16 |
| 8.3 | Cost Summary With Import Duty for Lakhra Units 1 and 2 in U.S. Dollars | 8-17 |

## LIST OF TABLES (Continued)


| Number | | Page |
|---|---|---|
| 8.4 | Cost Summary With Import Duty for Lakhra Units 1 and 2 in Rupees | 8-18 |
| 8.5 | Account Summary for Lakhra Unit 1 | 8-19 |
| 8.6 | Account Summary for Lakhra Unit 2 | 8-23 |
| 8.7 | Cash Flow for Lakhra Unit 1 in U.S. Dollars | 8-25 |
| 8.8 | Cash Flow for Lakhra Unit 2 in U.S. Dollars | 8-26 |
| 8.9 | Cost Summary Without Import Duty for Khanot in U.S. Dollars | 8-27 |
| 8.10 | Cost Summary Without Import Duty for Khanot in Rupees | 8-28 |
| 8.11 | Cost Summary With Import Duty for Khanot in U.S. Dollars | 8-29 |
| 8.12 | Cost Summary With Import Duty for Khanot in Rupees | 8-30 |
| 8.13 | Account Summary for Khanot Unit 1 | 8-31 |
| 8.14 | Account Summary for Khanot Unit 2 | 8-35 |
| 8.15 | Cash Flow for Khanot Unit 1 | 8-37 |
| 8.16 | Cash Flow for Khanot Unit 2 | 8-38 |
| 8.17 | Cost Summary Without Import Duty for Lakhra Single, Stand-Alone 250 MW Unit in U.S. Dollars | 8-39 |
| 8.18 | Cost Summary Without Import Duty for Lakhra Single, Stand-Alone 250 MW Unit in Rupees | 8-40 |
| 8.19 | Account Summary for Lakhra Single, Stand-Alone 250 MW Unit | 8-41 |
| 8.20 | Cost Summary Without Import Duty for Lakhra 2 x 350 MW Power Plant in U.S. Dollars | 8-45 |
| 8.21 | Cost Summary Without Import Duty for Lakhra 2 x 350 MW Power Plant in Rupees | 8-46 |

## LIST OF TABLES (Continued)


| Number | | Page |
|---|---|---|
| 8.22 | Account Summary for Lakhra 350 MW Unit 1 | 8-47 |
| 8.23 | Account Summary for Lakhra 350 MW Unit 2 | 8-51 |
| 8.24 | Annual Operation and Maintenance Costs for Lakhra in U.S. Dollars | 8-53 |
| 8.25 | Annual Operation and Maintenance Costs for Khanot in U.S. Dollars | 8-57 |
| 8.26 | Cost Reduction for Washed Coal Power Plant | 8-61 |
| 8.27 | Vendors Solicited for Budgetary Quotes | 8-62 |
| 8.28 | International Pricing Comparison of Prefabricated Process Piping | 8-63 |
| 9.1-1 | Number of Workers | 9-3 |
| 9.7-1 | Estimated Lakhra Project Telephone Subscriber Requirements | 9-18 |
| 9.8-1 | Payroll | 9-23 |
| 9.8-2 | Income Tax Paid | 9-24 |
| 9.8-3 | Coal Production, Coal Separation Taxes, and Miners Welfare Taxes | 9-25 |
| 9.8-4 | Three Levels of Import Duties for Lakhra Power Plant Site | 9-27 |

## LIST OF FIGURES


| Number | | Page |
|---|---|---|
| 4.2.1 | PMDC Mine No. 2 Seam Cross Section | 4-125 |
| 4.2.2 | Characteristic Washability Curve 4" x 100M Size Fraction, Lakhra Field-PMDC Mine No. 2 | 4-126 |
| 4.2.3 | Characteristic Washability Curve, 4" x 1-1/2" Size Fraction, Lakhra Field-PMDC Mine No. 2 | 4-127 |
| 4.2.4 | Characteristic Washability Curve, 1-1/2" x 3/4" Size Fraction, Lakhra Field-PMDC Mine No. 2 | 4-128 |
| 4.2.5 | Characteristic Washability Curve, 3/4" x 1/2" Size Fraction, Lakhra Field-PMDC Mine No. 2 | 4-129 |
| 4.2.6 | Characteristic Washability Curve, 1/2" x 1/4" Size Fraction, Lakhra Field-PMDC Mine No. 2 | 4-130 |
| 4.2.7 | Characteristic Washability Curve, 1/4" x 28M Size Fraction, Lakhra Field-PMDC Mine No. 2 | 4-131 |
| 4.2.8 | Characteristic Washability Curve, 28M x 100M Size Fraction, Lakhra Field-PMDC Mine No. 2 | 4-132 |
| 4.2.9 | Btu/lb. vs. Ash (4" x 100M - Seam Only) | 4-133 |
| 4.2.10 | Effects of Total Cleaning on Ash/Sulfur Removal and Btu Recovery | 4-134 |
| 4.2.11 | Total vs. Partial Cleaning and the Effect on Ash/Sulfur Removal and Btu Recovery (Seam Only) | 4-135 |
| 4.2.12 | Raw Coal Size Reduction Due to Air Drying | 4-136 |
| 4.2.13 | East Fairfield Coal Company Flowsheet | 4-137 |
| 4.2.14 | Distribution Curve for 2-1/2" x 28M Raw Coal Cleaned in Heavy Medium Cyclones | 4-139 |
| 4.4-1 | Lakhra Baseline Coal Evaluation | 4-140 |
| 4.4-2 | Lakhra Baseline Coal Evaluation | 4-141 |
| 4.4-3 | Lakhra Baseline Coal Evaluation | 4-142 |

## LIST OF FIGURES (Continued)


| Number | | Page |
|---|---|---|
| 4.4-4 | Lakhra Baseline Coal Evaluation | 4-143 |
| 4.4-5 | Lakhra Baseline Coal Evaluation | 4-144 |
| 4.4-6 | Lakhra Baseline Coal Evaluation | 4-145 |
| 4.4-7 | Lakhra Baseline Coal Evaluation | 4-146 |
| 4.4-8 | Lakhra Baseline Coal Evaluation | 4-147 |
| 4.5-1 | Lakhra Washed Coal Evaluation | 4-148 |
| 4.5-2 | Lakhra Washed Coal Evaluation | 4-149 |
| 4.5-3 | Lakhra Washed Coal Evaluation | 4-150 |
| 4.5-4 | Lakhra Washed Coal Evaluation | 4-151 |
| 4.5-5 | Lakhra Washed Coal Evaluation | 4-152 |
| 4.5-6 | Lakhra Washed Coal Evaluation | 4-153 |
| 4.7-1 | Site Elevation Babcock & Wilcox Boiler | 4-154 |
| 4.7-2 | Design Information Babcock & Wilcox Boiler | 4-155 |
| 4.7-3 | Design Information Combustion Engineering Boiler | 4-156 |
| 4.7-4 | Coal Analysis Combustion Engineering Boiler | 4-157 |
| 4.7-5 | Design Information Foster-Wheeler Boiler | 4-158 |
| 4.7-6 | Side Elevation Foster-Wheeler Boiler | 4-159 |
| 4.7-7 | Coal Analysis Foster-Wheeler Boiler | 4-160 |
| 4.7-8 | Ash Analysis Foster-Wheeler Boiler | 4-161 |
| 5.2.1 | Lakhra Area Map | 5-2 |
| 5.5.1.6-1 | Coal Laboratory and Sample Preparation Area | 5-64 |
| 5.6.2 | Master Project Schedule | 5-113 |
| 5.6.3 | Progressive Manufacture of Boilers and Turbines in Pakistan | 5-125 |

## LIST OF FIGURES (Continued)


| Number | | Page |
|---|---|---|
| 5.6.4 | Letter in Reference to Progressive Manufacture of Boilers and Turbines in Pakistan | 5-135 |
| 5.6.5 | Letter in Reference to Local Manufacturing of Boilers/Turbine | 5-139 |
| 5.6.6 | Letter in Reference to Progress in Manufacture of Boilers in Pakistan | 5-143 |
| 5.6.7 | Letter in Reference to Progressive Manufacture of Boilers and Turbines in Pakistan | 5-145 |
| 6.2.1 | CPPD Responsibilities Throughout Project Phases | 6-32 |
| 6.2.2 | Recommended CPPD Head Office Staff Activities | 6-33 |
| 6.2.3 | Recommended Coal Power Projects Department Organization | 6-51 |
| 6.2.4 | Coal Power Projects Department; WAPDA Staffing Plan for Key Personnel | 6-54 |
| 6.2.5 | Summary of Base Salary Costs (Rupees) | 6-55 |
| 6.3.2(a) | Lakhra Project Organization (Design and Construction) | 6-57 |
| 6.3.2(b) | Lakhra Construction Management Organization | 6-58 |
| 6.3.3 | Construction Management Manual; Table of Contents | 6-63 |
| 6.3.4 | Project Organization (Design and Construction); WAPDA Staffing Plan for Key Personnel | 6-64 |
| 6.4.2 | Lakhra Project Organization (Start-up and Test) | 6-66 |
| 6.4.3 | Start-up Manual; Table of Contents | 6-68 |
| 6.4.4 | Project Organization (Start-up and Test); WAPDA Staffing Plan for Key Personnel | 6-70 |
| 7.4.2(a) | Coal Power Projects Department; Preliminary Training Plan | 7-16 |
| 7.4.2(b) | Project Organization (Design and Construction); Preliminary Training Plan | 7-17 |
| 7.4.2(c) | Project Organization (Start-up and Test); Preliminary Training Plan | 7-18 |

## LIST OF EXHIBITS


| Number | | Page |
|---|---|---|
| 3.1 | Pakistan Planning Commission 1987-2010 Load Forecast Used in the Third Series of Generation Planning Studies | 3-33 |
| 3.2 | Fuel Costs | 3-34 |
| 3.3 | Existing Generation | 3-35 |
| 3.4 | Committed Generation Expansion Based on the Power Development Plan for Elimination of Load Shedding by 1990 | 3-36 |
| 3.5 | Candidates for Future Generation | 3-37 |
| 3.6 | Capital Costs | 3-38 |
| 3.7 | Case 31, Least Cost Generation Expansion Program for the Lakhra Underground Mine Alternative | 3-39 |
| 3.8 | Case 32, Least Cost Generation Expansion Program for the Lakhra Surface Mine Alternative | 3-41 |
| 3.9 | Case 3A, Sensitivity Case - Lakhra Surface, $24/Barrel Oil in 1991 | 3-43 |
| 3.10 | Case 31, 1 x 250 MW Lakhra Power Plant - Underground Mining System Capacity and Generation Mix | 3-45 |
| 3.11 | Case 32, 2 x 250 MW Lakhra Power Plant - Surface Mining System Capacity and Generation Mix | 3-46 |
| 3.12 | Case 3A, 2 x 250 MW Lakhra Power Plant - Surface Mining, $24 per Barrel Oil in 1991, System Capacity and Generation Mix | 3-47 |
| 3.13 | Coal Utilization | 3-48 |
| 3.14 | Capacity Factors | 3-49 |
| 3.15 | Third Series of WASP Computer Studies Comparison of Alternate Generation Expansion Plans | 3-50 |
| 3.16 | Typical Transmission System Characteristics | 3-51 |
| 3.17 | Approximate Power Plant Site Locations | 3-52 |

## LIST OF EXHIBITS
## (Continued)


| Number | | Page |
|---|---|---|
| 3.18 | Alternative Transmission Plans | 3-53 |
| 3.19 | Plan J.1 Jamshoro Substation One-Line Diagram | 3-54 |
| 3.20 | Plan J.2 Jamshoro Substation One-Line Diagram | 3-55 |
| 3.21 | Plan L.1/K.1 Lakhra/Khanot Substation One-Line Diagram | 3-56 |
| 3.22 | Plan L.1/K.1 Jamshoro Substation One-Line Diagram | 3-57 |
| 3.23 | Plan L.2/K.2 Lakhra/Khanot Substation One-Line Diagram | 3-58 |
| 3.24 | Plan L.2/K.2 Jamshoro Substation One-Line Diagram | 3-59 |
| 3.25 | Three Phase Short Circuit Currents | 3-60 |
| 3.26 | Comparison of Lakhra Transmission Plans, Transmission Line Length and Major Substation Equipment | 3-61 |
| 3.27 | Capital Costs of Lakhra Alternative Transmission Plans | 3-62 |
| 3.28 | Economic Comparison of Lakhra Transmission Alternatives | 3-63 |
| 3.29 | Computation of Transmission Losses from Lakhra/Khanot to Jamshoro | 3-64 |
| 3.30 | Lakhra or Khanot 500 kV Substation for Two 250 MW Units | 3-65 |
| 3.31 | Capital Costs of Lakhra Alternative Transmission Plans for Two 250 MW Units | 3-66 |
| 3.32 | Plant and Transmission Capital Cost for Two 250 MW Lakhra Plant | 3-67 |
| 3.33 | 1991 Plan 1, 1 x 300 MW Imported Coal Unit | 3-68 |
| 3.34 | 1991 Plans 2 and 2A, 1 x 600 MW Imported Coal Unit | 3-69 |
| 3.35 | 1993 Plan 3, 2 x 600 MW Imported Coal Units | 3-70 |
| 3.36 | 1993 Plan 4, 2 x 600 MW Imported Coal Units | 3-71 |
| 3.37 | Imported Coal 220 kV Substation, Plan 1 | 3-72 |

## LIST OF EXHIBITS
(Continued)


| Number | | Page |
|---|---|---|
| 3.38 | Imported Coal 220 kV Substation, Plan 2 | 3-73 |
| 3.39 | Imported Coal 220 kV Substation, Plan 2A | 3-74 |
| 3.40 | Imported Coal 220 kV Substation, Plan 3 | 3-75 |
| 3.41 | Imported Coal 500/220 kV Substation, Plan 4 | 3-76 |
| 3.42 | Conceptual KESC 220 kV Substation with Connections to Import Coal Plant, Plan 1 | 3-77 |
| 3.43 | Conceptual KESC 200 kV Substation with Connections to Import Coal Plant, Plans 2 and 2A and Plan 4 | 3-78 |
| 3.44 | Conceptual KESC 220 kV Substation with Connections to Import Coal Plant, Plan 3 | 3-79 |
| 3.45 | Jamshoro 500/220 kV Substation, Plans 1 and 2 | 3-80 |
| 3.46 | Jamshoro 500/220 kV Substation, Plan 2A | 3-81 |
| 3.47 | Jamshoro 500/220 kV Substation, Plan 3 | 3-82 |
| 3.48 | Jamshoro 500/220 kV Substation, Plan 4 | 3-83 |
| 3.49 | Capital Costs of Imported Coal Alternative Transmission Plans | 3-84 |
| 3.50 | Economic Comparison of Imported Coal Transmission Alternatives | 3-85 |
| 3.51 | Computation of Transmission Losses From Import Coal Plant to Jamshoro | 3-86 |

# EXECUTIVE SUMMARY

## PURPOSE

The purpose of this executive summary is to give the reader an overview of the contents and findings of this Power Plant Feasibility Report which forms a part of the Lakhra Coal Mine and Power Generation Feasibility Project. This report was developed by Gilbert/Commonwealth, International, Inc. (GCII) through the execution of Contract 391-0478-C-00-5014-00 which was administered by USAID and covers all the power plant related features of the total project. WAPDA, as the final Owner/Operator of this proposed plant, provided data, as required, for the development of the study and maintained a coordination role as the study progressed. Other contractors were retained to support the overall project in specific areas, as follows:

| | | |
|---|---|---|
| J. T. Boyd Company | - | Coal Mine Feasibility |
| ESE, Inc. | - | Environmental Assessment |
| ICF, Inc. | - | Economic and Financial Feasibility |

These contractors worked together and coordinated activities with GCII during the development of the reports.

## BACKGROUND

Originally, GCII performed work to support the development of the contractually specified 300 MW Lakhra Coal-Fired Generating Unit at one of three alternative sites. The sites investigated were Jamshoro, Khanot, and Lakhra (mine mouth). However, as the work of GCII and the J. T. Boyd Company progressed, two significant items became evident.

First, the gross calorific value of the coal was not as high as had been indicated from the review of previous studies. The average gross calorific value of the unwashed Lakhra coal on an "as received" basis is 5,100 Btu per pound rather than the previously used range of 6,000 to 6,600 Btu per pound.

Secondly, the coal mining plan was not of an economical scale. Therefore, it was decided to increase the planned mine production from 1,800,000 tonnes per year to 4,300,000 tonnes per year to assure that the coal would be produced at the lowest possible cost. This resulted in the need to modify the size of the power plant from a single 300 MW unit to a 2 x 350 MW unit set.

Additionally, early study work related to the Jamshoro site indicated that the cost to transport coal to the site and the environmental sensitivity due to its proximity to a major population center limited its

viability as a competitive site. As a result, final plant layout and cost projections for this study were limited to the Khanot and Lakhra sites.

## PROJECT ACTIVITIES IN PAKISTAN

### Data Gathering

Initial activities involved in the Lakhra Power Feasibility Project included a trip to Pakistan by key members of the GCII study team for purposes of gathering information on the Lakhra Project. The study team was in Pakistan for approximately 1 month. During that time information was gathered on site conditions at the various power plant sites under consideration, meteorology of the region, environmental data, detailed information on the existing WAPDA power generation and distribution system, and system planning information for purposes of conducting the generation planning studies that would be performed later in Pakistan. Subsequent visits to Pakistan were made by GCII training and development personnel, geotechnical staff, and members of the study group team who conducted generation and transmission system studies.

### Fuel Samples for Combustion Testing

One of the major activities that was initiated during the first information gathering trip in January 1985 was the collection and shipment of the first bulk sample of Lakhra coal for combustion testing in the United States. In total, three different consignments of Lakhra coal were shipped to the United States. The first was 50 tons of coal from PMDC Mine No. 2 for baseline combustion tests. The second sample, which was also from PMDC Mine No. 2, was shipped to the United States, washed in a commercial coal washery, and then forwarded to the combustion testing laboratory. The third sample of Lakhra coal consisted of 15 tons collected from the test shaft at the BT-11 bore hole on the Lakhra west lease area and was used for confirmation of baseline test results. Results of these combustion tests are presented in Volume IX.

### Soil and Site Investigations

During March and April 1985, soil and site investigations were conducted at the various proposed plant sites by GCII geotechnical staff members. The soils investigations program included borings placed at each of the three potential plant sites initially considered in the study. The program also included ground water observations at the three sites and sample collection of Indus River water samples at both the area close to Jamshoro and the area close to Khanot to determine potential water quality at river intakes for the power plant. Additional site investigations included the collection of existing topographic maps, where available, for the three sites and instructions in cooperation with WAPDA and the preparation of new topographic maps where no existing information was available. Results of the geotechnical studies are included in Volume VIII.

## Generation Planning Studies

GCII system planning staff conducted WASP-3 generation planning studies at WAPDA House in Lahore in cooperation with WAPDA planning personnel. Initial system planning runs were conducted in March 1985 to provide a check on the viability of the Lakhra Project in terms of a long-range generation expansion program for the WAPDA system. These runs also provided some initial information on the range and sensitivity for Lakhra coal pricing when compared to other generation expansion options, such as imported coal and imported oil. A second set of WASP runs was performed during August 1985. This set of runs used the best available information regarding coal quality, coal cost, and the power plant development cost that had been determined by that time. These WASP runs were also intended to provide a range of sensitivity for coal pricing. The system planning studies included the determination of the required additions that must be made to the WAPDA transmission system for domestic and imported coal-fired plants.

## Project Coordination

In the time period from January to August of 1985, GCII placed a resident project manager in Lahore, Pakistan. The resident project manager maintained a local presence for the GCII study team and worked in close conjunction with WAPDA and USAID staff. The resident project manager's primary functions were to gather follow-up information not gathered during the first trip to Pakistan, to provide liaison between the study team and USAID/WAPDA, and to attend monthly project coordination meetings.

# TESTING PROGRAMS

## Overview

During the course of the Lakhra Power Feasibility Study several testing programs were initiated to develop detailed information on areas pertaining to quality, cleanability, and combustion characteristics of Lakhra coal, as well as the soils characteristics of the three potential power plant sites. Testing activities related to the Lakhra coal were conducted in the United States. Testing of soil samples gathered during the soils exploration program was completed in Pakistan under the general direction of GCII geotechnical staff.

## Combustion Testing

The combustion test program conducted as a part of the Lakhra feasibility study was carried out by Combustion Engineering Inc., who served as a subcontractor to GCII on the project. The three-phase combustion test program was intended to provide detailed information on Lakhra coal combustion characteristics, slagging and fouling potential, the characteristics of ash generated by burning Lakhra coal and potential corrosion/erosion

effects which may be encountered by the boiler when burning this high sulfur lignite. The combustion testing program produced sufficient technical information to establish design parameters for the furnace and boiler convection passes as well as the boiler auxiliaries for Lakhra lignite.

### Coal Washability Testing

Two phases of coal washability testing were carried out on Lakhra lignite in the United States. The first was a laboratory-scale washability analysis conducted by Roberts & Schaefer Company and Commercial Testing and Engineering as a subcontractor to GCII. Three tons of Lakhra lignite was used for this analysis. The second phase was the commercial scale washing of 50 tons of Lakhra lignite at a commercial wash plant to gather information on the correlation between laboratory scale testing and commercial plant washing plus provide a washed sample of Lakhra lignite for the second phase combustion testing program.

The soils and ground water testing program conducted by GCII in Pakistan provided information on the bearing capacity of soils and rock encountered in the area. The soils program also provided information on the permeability of the rock encountered at the plant sites, the extent of fracturing of the rock, and the potential for settlement of major foundations. Analysis of ground water samples collected during the soils program provided information on the nature and characteristics of ground water available at the potential plant sites.

## HOME OFFICE ACTIVITIES

### Overview

The activities conducted by GCII in the United States in support of the Lakhra Power Feasibility Project focused on the development of a power plant design which is appropriate for the area of Pakistan where the proposed plant would be located and for the type of fuel to be burned in the boilers. Study work in the United States also included development of transmission line design, environmental assessment of potential guidelines to be enforced, and the environmental impact of the plant development on the region. A detailed review of the existing WAPDA organization and the adjustments to be made in preparation for the development of a coal-fired plant construction program was made along with suggestions and outlines for developing a training program to support the development of the coal-fired plant. A detailed capital cost estimate for the plant and infrastructure development required to support the project was also made.

## Plant and Site Layouts Developed

The development of plant and site layouts incorporated the particular characteristics of each of the sites being considered and the necessary interties with the surrounding area including delivery of coal, delivery of water, and connection with the existing transmission grid system. These layouts are shown on Figures 5.3-1 through 5.3-9 in Volume VII.

## Design Engineering Accomplished

Considerable effort was spent during the course of the study on developing the furnace and boiler design parameters for the Lakhra coal-fired boiler. These parameters were then used by Combustion Engineering and GCII to develop a design layout of the boiler and its auxiliary systems. Once the characteristics of the Lakhra boiler design were known, a detailed basis of design analysis was generated to establish the characteristics for the supporting systems required for the project. In total, 23 conceptual system descriptions, 36 specifications, and 5 flow diagrams were developed to represent the results of the basis of design work. The system descriptions generated are included at the end of Volume I. The specifications generated for the project are included as Volumes IV, V, and VI of this report. Flow diagrams prepared are shown in Volume VII along with physical drawings of the power block and balance of plant.

GCII also developed a preliminary design for the transmission lines systems and substation required for the Lakhra Project. This preliminary design included an assessment of the options available for connecting the alternative plant sites to the WAPDA grid. The cost of the necessary substation and transmission facilities was also determined. Recommendations for the optimum transmission system plan are included in Chapter 3 of Volume I.

## Environmental Impact on Design Studies

An assessment of environmental requirements that may be imposed on the plant by potential lending institutions was made as a part of this project. A review of the basic environmental guidelines expected to be imposed on the project along with their impact on the design basis of the power plant systems and an assessment of alternatives available in such sensitive areas as $SO_2$ emissions is included in Chapter 5 of Volume I.

## Training and Development Studies

Recommendations on institutional development requirements within WAPDA to support a new coal-fired plant design, construction, and operation programs are made in Volume II. Chapter 6 in this volume also contains recommendations for the development of a training program to familiarize WAPDA staff with the operational requirements for a coal-fired power plant development.

## Capital Cost Estimates Developed

Chapter 8 of this feasibility study, which is included in Volume III, represents the results of the cost estimating work that was performed to establish construction costs for the Lakhra coal-fired power plant development. The cost estimating portion of this feasibility study included information generated at GCII based on historical information accumulated from past projects plus significant input from not only U.S. vendors of equipment but also international equipment vendors who most likely may be involved in competitive bidding for the Lakhra Plant. The involvement of both U.S. vendors and international vendors allows for the best representation of what the final project cost will be.

# INTERIM PROJECT REVIEWS

## Overview

During the course of the Lakhra Power Feasibility Study, two important project review meetings were held with the participation of all study contractors, USAID, and WAPDA staff. The meetings were intended to provide a review of work developed at various points in the project and the opportunity to make important decisions and/or revisions necessary to develop the project in a manner which would be satisfactory to USAID, WAPDA, and the potential lending institutions which will be involved in financing the project.

## Initial Review Meeting

The first meeting was held in April at GCII offices in Jackson, and was attended by the contractors involved, USAID/WAPDA and representatives from the World Bank. This meeting provided a consolidated review for the client and the World Bank of activities completed to date, ongoing activities of the various contractors, and a review of the work required to complete each contractor's effort. The meeting gave both the client and the World Bank the opportunity to comment and suggest modifications on the work that was being developed by each of the contractors. It also provided the various contractors with a good background on the work that was being developed by others.

## Project Assessment Meetings

A second series of project review meetings was held during October in the United States at the offices of the J. T. Boyd Company in Pittsburgh, and reconvened one week later at the offices of ICF in Washington, D.C. These meetings allowed both WAPDA and USAID to assess the status of the project as it was nearing completion and the results that were being obtained by the primary study contractors. Four key decisions were made during the October meetings in Pittsburgh and Washington, D.C., which set the final course for the completion of the project. These decisions are as listed below:

1. The coal mining plan being developed by the J. T. Boyd Company will be expanded to produce a maximum of 4,300,000 tonnes annually, in lieu of the 1,800,000 tonnes annually, initially projected. This expansion will allow an overall reduction in the unit price of coal due to economy of scale.

2. The power plant development being pursued by GCII was expanded from a single 300 megawatt unit to two 350 megawatt units to utilize the increased coal production.

3. The Khanot and Lakhra sites will be considered as viable power plant sites in the final development of the study. It was agreed by the contractors and the client that the potential for environmental sensitivity problems at the Jamshoro site in conjunction with the higher cost of coal delivery to that site eliminated it from further consideration.

4. $SO_2$ point source emission rates for the final plant development will be an important factor in the final configuration and cost of the plant. This is due to the fact that final coal quality values indicate that some level of sulfur or $SO_2$ reduction would be necessary for the power plant units.

## RESULTS OF STUDY

### Recommendation

The studies performed by GCII have shown that it is technically feasible to construct a two by 350 MW Lakhra coal-fired power plant that will demonstrate a high degree of reliability and availability. This conclusion has been reached as a result of the comprehensive test burns of Lakhra coal, careful determination of recommended boiler design parameters and the development of the necessary balance of plant concepts to support each generating unit. Investigations made within the scope of the study have also shown that utility units exist that are burning lignites that are similar to Lakhra lignite in important combustion and high temperature corrosion characteristics. The most critical factor in the successful operation of the Lakhra coal-fired units will be the careful application of the design parameters developed within the study and the recognition of the impact of coal and ash characteristics on supporting systems such as the coal handling; coal preparation; furnace, superheater, reheater, economizer and air heater surfaces; particulate collection; sulfur dioxide removal and ash disposal systems. The boiler design parameters recommended and the technical descriptions of the supporting systems developed are contained in Chapters 4 and 5 of Volume I.

### Significant Findings and Accomplishments

1. Alternative Fuel Burning Capability Established.

An important development of the study, which is closely related to the subjects discussed above, is the ability of boilers designed for the burning of Lakhra lignite to successfully burn a standby alternative fuel such as imported coal or furnace oil. The general conclusion of the study is that imported coal or furnace oil or both can be burned in a Lakhra coal boiler design, but unit capacity and heat rate derates may occur on switching directly to the alternative fuel. An alternative fuel will require capital expenditures and outage time to make a fuel conversion, whereas the use of a supplemental fuel to cover capacity losses due to pulverizer maintenance can be accomplished without derating capacity or heat rate or physical revisions to the boiler. Revisions required for alternative fuels can be simplified by proper initial specification of the boiler; however, modifications cannot be eliminated entirely.

2. Lakhra Lignite Fuel Characteristics Determined.

The work completed by both the J. T. Boyd Company and GCII during the course of the Lakhra Power Feasibility Study has developed a much improved understanding of the characteristics and variability of Lakhra lignite. A detailed discussion of this understanding is included in Chapter 4 of Volume I. In general terms, Lakhra lignite can be classed as lignitic with a mean gross calorific value of 5100 Btu per pound. Average run of mine ash content is 36.0 percent (dry). Average sulfur content is 7.4 (dry). Lakhra is classified as medium to high fouling and severe slagging coal.

3. Washability Studies Conducted.

Washability studies conducted on Lakhra lignite indicate that improvements in the quality of the coal can be made by washing. On average, the sulfur content can be reduced by over 15 percent. The ash content can be reduced by about 40 percent. The calorific value can be improved by 1100 Btu per pound. As a result of the combination of improved heating value and reduced sulfur and ash contents, the $SO_2$ emmission rate and ash entering the furnace in terms of pounds per million Btu can be reduced by 30 and 50 percent respectively. These improvements are offset by the low yield (65 percent) and Btu recovery (80 percent) anticipated. These factors have a significant impact on the cost of washing due to the amount of material which must be mined and then discarded as rejects.

4. Site Selection Factors Analyzed.

The site development work done during the course of the study indicated that the Khanot and Lakhra sites are very competitive and offer distinct advantages as compared to the Jamshoro site. The Jamshoro site is close to the population center of Hyderabad and offers a ready labor force; however, this site requires a coal

transportation system that adds an average of approximately 3.40 U.S. dollars per tonne to the cost of coal, according to the J. T. Boyd Company. In addition, the Jamshoro site will have a higher background pollution level of sulfur dioxide due to the oil-fired units that are planned at that site and it is very close to the environmentally sensitive receptors of Udqat Medical College, Sind and Mehran Universities. The Jamshoro site was eliminated from final consideration in the study due to these facts.

A purely economic evaluation of the Khanot and Lakhra sites favors the selection of the Lakhra site due to savings in coal transportation cost. The Khanot site is less expensive in initial capital cost but requires an average of approximately 2.40 U.S. dollars per tonne in coal transportation cost for the life of the plant. The Khanot site is close to the Indus River; thus access to water for makeup and colony requirements is simpler and the cost of operation of water supply is less expensive than with the Lakhra site. Also, the transmission intertie to the 500 kV grid is shorter and direct access to the main Pakistan railway line between Jamshoro and Dadu is available. However, none of these factors outweigh the differential in delivered coal cost calculated by the J. T. Boyd Company.

5. Intangible Factors Considered.

The ready access to needed plant supporting systems at Khanot is supplemented by intangible factors such as a more developed and habitable area for the plant operating staff, easier access to the population center of Hyderabad, and the opportunity to enlarge and improve the nearby communities of Khanot and Mazurabad. The final evaluation of the preferred site must weigh the advantages of these intangibles against the percentage differential of total plant development costs to which a purely economic evaluation favors Lakhra.

6. Future Energy Expansion Studied.

Beyond the technical and other site considerations for the proposed Lakhra coal-fired plant development, GCII assessed the priority to which the domestic coal-fired plant fit within the energy expansion options open to Pakistan over the next 20 years. This assessment was conducted using the WASP-3 computer model for generation planning. These studies investigated a 300 MW sized unit, variations in the price of domestic and imported fuels, the proposed site locations, and the variations in capital costs due to the installation of $SO_2$ reduction equipment.

The generation planning studies concluded that both of the proposed Lakhra coal units are components of a desirable generation planning scheme to the year 2005. Unit 1 was selected for installation before mid-1992 and Unit 2 was selected for a mid-1993 start-up.

7. Energy Transmission Systems Analyzed.

Transmission systems planning studies for both the domestic and imported coal units considered load flow, stability and short circuit analysis. These studies concluded that domestic units in the Lakhra region should be connected to the 500 kV grid rather than extending 220 kV circuits to the existing Jamshoro substation. Additionally, a single 600 MW imported coal unit at Karachi may be connected to the system at the 220 kV level; however, further expansion of imported coal-fired capacity in the Karachi area will require a system expansion to 500 kV.

8. Organization and Staffing Requirements Developed.

Institutional development and training studies conducted by GCII indicate that the organization and staffing of the Coal Power Projects Department needs to be strengthened to properly support major coal-fired development and expansion in Pakistan. Additionally, an increased autonomy of the department and a clearer definition of management, technical and administrative staff roles should be developed in order to gain the best expertise of individuals within the department and limit the dilution effect experienced by the overlapping of secondary functions.

A preliminary training plan has been developed on the basis of an assessment of the current capabilities of WAPDA with respect to performing functions in support of the design, construction, operation and maintenance of large coal-fired power stations. Currently, WAPDA successfully operates and maintains several large gas- and oil-fired power stations and has several power stations under construction. Although an improvement in the performance of the WAPDA functions in support of these activities is desirable and recommended in the preliminary training plan, these WAPDA capabilities are recognized and consequently the emphasis of the plan is on training in coal and ash handling related activities. The schedule of the preliminary training plan has been based on the proposed project schedule of the Lakhra station. The implementation of the plan is estimated at a cost of approximately $1,695,065 over a period of 6 years. In addition to this cost, it is estimated that the establishment of a training center at Jamshoro, including a simulator, will be at a cost of approximately $8,330,000.

9. Capital Cost Requirements Estimated.

Capital costs for the Lakhra and Khanot sites were developed based on information obtained from WAPDA, visits to Pakistan, GCII and subcontractors, J. T. Boyd Company, major equipment vendors, published articles and cost data base estimating manuals, and in-house experience on other power plant projects of similar size.

The costs reflect current world market conditions with major equipment pricing obtained from vendors with worldwide operations. Also, an analysis of local material and labor supply capabilities was performed to allow for in-country procurement of available materials, equipment and labor resources.

Chapter 8 of this study provides the capital costs for each unit at each site and an annual cash flow of costs for the first unit of each site. In addition, the cost impacts of four alternatives for limiting $SO_2$ emissions at each site are summarized. Also, fixed and variable operating and maintenance costs are estimated on an annual basis for each site based on two unit operation.

A summary of the total capital costs for each site follows, refer to Chapter 8 for a detailed review of the pricing and scope of each estimate.

| | Lakhra | | | Khanot | | |
|---|---|---|---|---|---|---|
| | Unit 1 | Unit 2 | Total | Unit 1 | Unit 2 | Total |
| 1. Base without $SO_2$ removal | 746.7 | 502.0 | 1248.7 | 708.7 | 504.2 | 1212.9 |
| 2. Washed coal | 722.8 | 488.5 | 1211.3 | 684.8 | 490.7 | 1175.5 |
| 3. 1000 TPD emission limit | 853.6 | 502.0 | 1355.6 | 815.6 | 504.2 | 1319.8 |
| 4. 750 TPD emission limit | 853.6 | 604.9 | 1458.5 | 815.6 | 607.0 | 1422.6 |
| 5. 500 TPD emission limit | 900.9 | 652.1 | 1553.0 | 862.9 | 654.3 | 1517.2 |

The above costs include engineering, WAPDA administration, clearing costs, insurance, contingency, escalation, and interest during construction.

## 1.0 INTRODUCTION

In December 1984, USAID/Islamabad and WAPDA/Lahore authorized Gilbert/Commonwealth International Inc. (GCII) to conduct a feasibility study for the Lakhra Power Project. WAPDA's generation mix is hydro, steam, and gas turbines. The steam and gas turbine units are fired with oil or gas; there is no extensive use of coal as fuel for electrical power generation in Pakistan. Consequently, this study is keyed to investigate the feasibility of the use of indigenous sub-bituminous to lignite coal deposits at Lakhra, northwest of Hyderabad in Sind Province.

In 1855, Baluch Nomads reportedly struck a 2.4 meter (7.9 feet) seam of coal while sinking a water well at Lakhra. During the 1940's and 1950's, coal cuttings were encountered while drilling for oil by the Burmah Oil Company and by the PAK-Hunt International Oil Company. In 1960, a lignite seam up to 1.67 meters (5.5 feet) was reported by Hunt Survey Corporation.

The 1960's also saw the Geological Survey of Pakistan (GSP) and the United States Geological Survey (USGS) carry out a cooperative investigation at Lakhra. Later the West Pakistan Industrial Development Corporation (WPIDC) found the deposits generally unsuitable for hard coke production but possibly suitable for thermal power electrical generation.

The presence of sub-bituminous/lignite deposits at Lakhra was well established and in 1966/67 WIPDC commissioned a Polish firm to perform a mining and power station feasibility study at Lakhra. That study concluded that underground mining operations could produce one million tons annually for thermal generation in a plant rated at 250 megawatts. Economic competition from hydro, natural and gas and imported oil negated any further consideration of the use of Lakhra deposits until the first oil shock in 1973. In 1976, the Pakistan Mineral Development Corporation (PMDC) proposed a Lakhra coal mining project and WAPDA proposed a 250 MW Lakhra coal fueled power station. These proposals culminated in the February 1981 feasibility study by Japan International Cooperation Agency (JICA) that concluded a 300 MW Lakhra fuel power station and mine was feasible. In April 1983, Stone & Webster Engineering Corporation (SWEC), in cooperation with WAPDA and PMDC, completed a Lakhra coal and power development project review for USAID that further concluded a 300 MW power station and coal mine was feasible.

The JICA and SWEC studies, while providing feasibility, have raised a number of concerns by USAID, the World Bank and the

Asian Development Bank (ADB). These concerns must be addressed before the agencies can make final funding decisions, and are as follows:

a. quantity of reserves,

b. quality of coal,

c. economics of the project,

d. environmental impact, and

e. socio-economic impact.

The USAID mission at Islamabad engaged various contractors to address the concerns listed above. GCII's primary scope of work is the feasibility study of the power plant itself; however, the execution of that study requires interfacing with others who are addressing other scopes that interface with power plant feasibility investigations.

Initial efforts in the development of the Lakhra Power Feasibility Study were focused on the development of a single 300 MW plant at one of three alternate sites. The sites were designated as the Jamshoro, Khanot and Lakhra sites. The Jamshoro site, which is currently being developed for oil-fired units, is in the Hyderabad area and represents an already developed site close to the Indus River, the existing transmission grid and near a major population center. The Khanot site represents the closest site to the mine area which is still close to the Indus and the transmission grid. The Lakhra site is a true mine mouth plant site. The 300 MW unit size was selected as the maximum that could be supported by demonstrated coal reserves in the lease area.

Initial work performed by the J. T. Boyd Co. (Mining Consultant), GCII and ESE (Environmental Assessment Consultant) indicated that some adjustments to the initial scope were warranted in finishing the study program and presenting the final results. First, development of potential reserve estimates and the cost per tonne of coal based on a single 300 MW plant at 1.8 million tonnes/year indicated that an expanded operation at a lower cost/tonne, due to economy of scale, could be supported by the indicated reserve calculation. It was estimated that a 4.3 M tonne/year operation at a lower coal cost is feasible. This amount of production can support a 2 x 350 MW power plant. Therefore, the scope of the initial plant development was revised to be two units at 350 MW each. Second, early work related to the Jamshoro site indicated that the cost of coal transport to

the site and the environmental sensitivity encountered by its proximity to a major population center limited its viability as a competitive site. As a result, final layout and cost development for the study was limited to the Khanot and Lakhra sites.

Therefore, the final feasibility report addresses the following major topics:

Chapter 2 - Scope of Study

This chapter delineates the major concern areas that were investigated and relates interfaces with GCII subcontractors and USAID contractors that took place.

Chapter 3 - System Planning and Cost Analysis

Generation and transmission planning studies for the Lakhra project were conducted by GCII. The generation planning studies were performed to determine if new generating units, fired on domestic coal, are components of an optimum generation expansion program to the year 2005. Sensitivity studies were conducted for variations in capital and operating costs. New generating units operating on imported coal were also considered. The transmission planning studies determined what additions would be required to connect the new domestic coal-fired units to the WAPDA transmission system. These system additions were determined for three power plant sites. Load flow, stability, short circuit and economic analysis studies were conducted for each of these plant locations.

Chapter 4 - Lakhra Coal Characteristics

GCII has summarized the Lakhra coal characteristics from the previous study work by JICA, and from current work performed by J. T. Boyd Company, Combustion Engineering, Inc., and Roberts & Schaefer Company. Lakhra coal analyses are tabulated for boiler specifications for unwashed and washed coals. The methods and procedures used for collection and shipment of PMDC 2 and lease area coal at BT-11 for test burns and washability analysis in the USA are discussed. The results of the test burns and washability analysis are appended to the report (Volume IX), but discussions are in this chapter. The investigation of a coal with a similar ash to Lakhra ash is included, and recommended boiler design parameters are stated.

Chapter 5 - Power Plant Design Considerations

Design considerations for siting, operation, environmental impact, basis of design analysis and construction are discussed in this chapter for the two sites, which are near Khanot at the intersection of the Lakhra and Dadu roads, and at the mine mouth between the west and central lease areas.

Chapter 6 - Institutional Development

The recommended organizational revisions and structures that are foreseen to efficiently develop coal-fired thermal electrical generation plants in the WAPDA System are delineated in this chapter. The level of staff required to support design, construction, operation, and maintenance of a 2 x 350 MW thermal power plant is defined. The eighteen findings and conclusions which led to twenty-five recommendations are summarized in Chapters 9 and 10.

Chapter 7 - Training

The depth, level, and extent of training for managers, engineers, operations, and maintenance are defined in this chapter. The recommended training is based on the staff levels defined in Chapter 6, Institutional Development, and covers the Coal Power Projects Department in Lahore and the Lakhra Power Plant near Hyderabad. There are seven recommendations concerning training and three appendices dealing with organization, and training in country and out of country.

Chapter 8 - Capital Costs of Power Plant

The capital costs estimated for each of the sites discussed in Chapter 5 are delineated in this chapter. The method, assumptions and qualifications used in developing these estimates are discussed. Any exclusions from these estimates are also defined.

Chapter 9 - Conclusions

This chapter summarizes the conclusions made throughout and as a result of the power plant feasibility study. The conclusions address the concerns of the lending agencies. Those conclusions made as a result of the combustion test burns lead to recommendations for boiler design specification parameters. Those made as a result of investigative visits to Pakistan address subjects such as system planning, plant layout, plant location, environmental control technology, institutional development, and staff training.

Chapter 10 - Recommendations

The recommendations resulting from study and investigations by GCII, Roberts & Schaefer, Combustion Engineering, J. T. Boyd, and interviews with Babcock & Wilcox and Foster-Wheeler are summarized in this chapter. These recommendations will address the concerns of the donors and lending agencies as well as any area not identified as a concern that must be addressed.

## 2.0 SCOPE OF STUDY

GCII's scope of work is detailed in its work plan dated April, 1985, attached hereto as Appendix D. The thrust of the work plan is the study of the feasibility of a 2 x 350 MW power plant, the impact of the quality of the indigenous Lakhra deposits on the power plant and the effect of the power plant on the environment.

The major concerns expressed by USAID, World Bank and ADB resulted in a scope of work that was flexible to meet the variations in work level that resulted from the ongoing investigations by subcontractors of GCII, and by other contractors of USAID, and from GCII interfaces with USAID contractors.

The major question of this investigation by GCII concerning the Lakhra deposits was the suitability of the indigenous fuel for a 350 MW power boiler. Additionally, if the fuel was suitable for use in a power boiler, then what was the size and cost of the boiler?

Other questions of this investigation included: What impacts, if any, does Lakhra coal have on the overall plant layout? What must be done to size the coal handling plant? How large must the electrostatic precipitator be? Will the high sulfur meet the World Bank point source emission standard? Will the power plant effluents be returned to the Indus River, reused or evaporated on site? Should the coal-fired power plant be located at the mine mouth or at the Khanot site? How should bottom ash, fly ash and liquid wastes be disposed of? Can it be demonstrated that a Lakhra fueled 2 x 350 MW plant can meet forecast loads? Is it the least costly alternative available? Will the plant produce satisfactory economic and financial rates of return on investments?

From these concerns, the scope of the study was developed. The following major sections of this report address the scope and are discussed below.

### System Planning and Cost Analysis

GCII was to perform a system planning study to determine the need for Lakhra fueled units. This study was to include generation and system planning studies including cost considerations to evaluate the compatibility of the Lakhra fired units to fit into the WAPDA system.

## Lakhra Coal Characteristics

GCII was to investigate the design requirements of a steam generator including serviceability of the furnace and boiler equipment from firing of unwashed and washed Lakhra fuels. This was accomplished by collection of Lakhra fuel and shipment to a combustion testing subcontractor, Combustion Engineering, which performed detailed bench tests and combustion testing on the bulk samples of the fuels. Samples of the fuel were also furnished to the washability subcontractor, Roberts & Schaefer, to determine the washability of the fuel on both a laboratory and commercial scale and provide a bulk sample of washed fuel for combustion testing to determine the impact washed fuel would have on the boiler design parameters. Data from these investigations were shared with J. T. Boyd, who in turn supplied GCII with coal data from their boring program.

## Power Plant Design Considerations

GCII was to investigate potential sites to determine a recommended power plant location. These sites included locations at the mine mouth (Lakhra), Khanot and Jamshoro. Included in this analysis were fuel transportation, electrical transmission, water supply, soil, environmental and social considerations.

This task also included establishment of environmental limits and impacts and investigation of various environmental control technologies to establish recommended designs for environmental control. GCII was also to develop power plant systems design and construction contract organization to enable development of costs for the power plant.

## Institutional Development

GCII was to support WAPDA in the institutional development of the Coal Power Projects Department, specifically in the areas of management of the power unit and transmission components.

## Training

GCII was to identify specific areas where training for the Lakhra Project is required and prepare a specific training plan to meet these needs.

## Capital Costs of Power Plant

GCII was to develop total capital costs for the power plant. This was to include delineation of site-sensitive components for each of the sites under consideration.

# 3.0 SYSTEM PLANNING AND COST ANALYSIS

Revised April, 1987

## 3.0 SYSTEM PLANNING AND COST ANALYSIS

Section 3.0 of this report contains four subsections as follows:

3.1 - First and Second Series of Generation Planning Studies

3.2 - Third Series of Generation Planning Studies

3.3 - Lakhra Transmission System Studies

3.4 - Imported Coal Transmission Studies

## 3.1 FIRST AND SECOND SERIES OF GENERATION PLANNING STUDIES

The necessary generation planning studies to determine the economic feasibility of the Lakhra Project were initiated in January 1985. A GCII engineer visited WAPDA in Pakistan to begin collecting the information required for this study and to gain first hand experience with the personnel assigned by WAPDA and USAID to this project. In addition to numerous meetings while in Pakistan with WAPDA and USAID, the GCII engineer met with representatives of the following organizations:

a. International Bank For Reconstruction and Development (IBRD)

b. Pakistan Atomic Energy Commission (PAEC)

c. International Atomic Energy Agency (IAEA)

d. Argonne National Laboratory (ANL)

The meetings with these various organizations provided the necessary overview and details to guide this project towards the proper goals. It was particularly important in a project where so many different organizations were involved at the project management level that a concensus of agreement be arrived at early in the project cycle and that continuous contacts be maintained.

These meetings established that, following preparation of the data by the GCII engineering team in the USA, the computer planning studies for this project would be conducted using the WAPDA IBM 4331 computer located in Lahore, Pakistan. For generation planning studies the WASP-3 Generation Planning Program was used, which had recently been established on the WAPDA computer in Lahore. The WASP program is sponsored internationally by the IAEA for use in generation planning studies. Performing the computer studies in Pakistan ensured that WAPDA personnel were completely involved in these studies.

During February, 1985 GCII continued work in the USA, reviewing the data gathered in Pakistan and past generation studies conducted by WAPDA. Technical and economic data for the WASP model and for the transmission studies were then developed. In March, the computer studies were performed in Lahore. The results of these studies have been presented in the December 1985 report prepared by Gilbert/Commonwealth and presented to WAPDA and USAID. These studies have been designated as the first series of WASP runs.

In summary, the main conclusion from the first series of runs was that a 3 x 300 MW power plant fueled with domestic coal produced from the Lakhra coal field was part of a least cost generation expansion plan. The three units were to be placed in service between 1990 and 1992.

During August, 1985, a second series of WASP runs was conducted by GCII and WAPDA engineers. These studies were necessary because, during the period from March to August, the coal consultant, J. T. Boyd, provided revised information regarding the cost of the coal to be produced by the prospective mines at Lakhra. Also, WAPDA engineers obtained new information describing the operating characteristics for several of the hydro-electric units proposed for future installation. Further, it was decided that two 600 MW oil-fired units would be included as candidates for future generation in the study.

The conclusions of the second series of WASP runs regarding the Lakhra Power Plant remained essentially unchanged from the first series. The 3 x 300 MW plant remained part of the least cost generation expansion plan.

## 3.2 THIRD SERIES OF GENERATION PLANNING STUDIES

In April, 1986, a third series of WASP runs was initiated by GCII and WAPDA engineers. These studies were performed because in the period from August, 1985, to April, 1986, new information was again provided by J. T. Boyd regarding the cost of the coal produced by the prospective mines at Lakhra. Also, the WAPDA engineers had completed a plan to eliminate load shedding on the WAPDA electric system by 1990. The elements of this plan which have been accepted by the Government of Pakistan were included in the third series of WASP runs. GCII reviewed all of the capital costs for the candidate generation units for future expansion of the WAPDA electric system.

### 3.2.1 Load Forecast

Exhibit 3.1 shows the load forecast used in the third series of WASP runs. This load forecast, which was developed by WAPDA, is adapted from the WAPDA plan to eliminate load shedding by 1990. Compared with the earlier forecast used in the first two series of WASP runs, the year-by-year loads average about 5 percent higher. In the early years the increase is only about 3 percent, and by 2010 the new forecast is about 10 percent higher.

The projected load and energy for 1987, the first year of this study, is 5,361 MW and 29,446 GWHr. By 2010, the horizon year of the studies, the projected load and energy have increased to 34,191 MW and 187,894 GWHr. The equivalent compound growth rate is 8.4 percent for this period. The annual growth rate starts at 10 percent in the early years and decreases to 6.8 percent by the horizon year.

### 3.2.2 Fuel Costs

The fuel costs used in this third series of WASP runs have been changed significantly from the earlier generation planning studies. These costs reflect changes introduced by J. T. Boyd and the recent reductions in the cost of oil on the world market. Exhibit 3.2 summarizes the fuel prices used in this study.

The fuel costs for the domestic coal are split into foreign and domestic portions. The underground mined Lakhra coal and future domestic coal use a ratio of 55 percent domestic and 45 percent foreign cost. The surface mined Lakhra coal uses a ratio of 50 percent for each. Future domestic coal units assume that new coal fields will be discovered which will permit these power plants to be constructed. The foreign components of the fuel costs include a shadow pricing factor

to reflect the desirability of encouraging the development of domestic enterprise and investment.

The heat content of the fuels assumed in this study are shown in the notes at the bottom of Exhibit 3.2. These values were used to calculate the fuel costs in units of "$/GCal." The cost of natural gas was set equal to furnace oil at $8.74/GCal. The cost of high speed diesel oil was determined to be 30 percent more than furnace oil, or $11.36/GCal.

As recommended by the economic specialist, ICF Inc., the cost of unserved energy has been assumed to equal 20 cents per kilowatt-hour.

### 3.2.3 Existing and Committed Future Generation Capacity

As shown in Exhibit 3.3, there are 66 generating units in the existing WAPDA and KESC electrical systems. Total available capacity in the year 1986 is 5787 MW. However, during the critical period the available capacity is reduced to 4589 MW. The critical period occurs when hydro capacity is reduced just prior to the monsoon season and the peak load is high due to increased air conditioning load. This reduced capacity is inadequate to supply the needs of the electrical system and has required the development of a load shedding policy by WAPDA.

Exhibit 3.4 shows the planned generation expansion intended to eliminate load shedding by 1990. The WASP simulation demonstrates that this expansion program, if followed, will successfully eliminate the need for load shedding by 1990.

### 3.2.4 Candidates for Future Generation Capacity

The candidates for future generation expansion of the Pakistan electric system are shown in Exhibit 3.5. The principal candidates of interest to this study are the Lakhra Power Plant options using either surface or underground mined coal from the Lakhra coal fields. Due to limited proven coal reserves, these plants are limited to 1 x 250 MW capacity for the underground mine and 2 x 250 MW for the open pit surface mine.

One of the important characteristics of the electric system in Pakistan is the high percentage of hydro-electric power generation. Hydro-electric power is a cost-effective and reliable source of electrical energy and has, therefore, been included in the expansion program. Twenty-nine hydro-electric projects are included as expansion candidates. Both low head projects and major dams are included in this inventory.

In addition to the Lakhra Project, other candidates are included for expansion of base load thermal capability. These include:

a. Imported Coal Plant, 8 x 460 MW, earliest in-service date of first unit December 1993

b. Imported Oil Plant, 4 x 400 MW, earliest in-service date of first unit June 1995

c. Nuclear Power Plant, 1 x 900 MW, earliest in-service date December 1996

The additional oil-fired units at Pipri and Jamshoro are included as candidates for base load expansion. The imported coal plants are to be constructed in the Karachi area. The coal is to be shipped via a new port facility to be constructed at Karachi. At the time these studies were performed it was assumed that these coal power plants would be limited by constraints on local pollution to no more than 2000 MW at any one site. Subsequent studies by WAPDA indicate that imported coal power plants at Khalifa Point and Bundal Island could be developed to 4000 MW capacity without flue gas desulfurization equipment.

### 3.2.5 Capital Costs

The capital costs for the conceptual Lakhra Power Plant were developed by GCII. For the base case WASP runs (Cases 31 and 32), the cost developed by GCII was reduced by approximately 20 percent due to the evidence that costs for construction of major power plant installations are presently depressed. In the case of the 2 x 250 MW Lakhra Power Plant fueled with surface mined coal, the first unit was reduced by 20 percent and the second unit by 10 percent. Then the costs were averaged for the two-unit plant. The capital costs for all of the generation candidates, for the third series of WASP studies, are given in Exhibit 3.6.

### 3.2.6 Least Cost Generation Expansion Plan (Base Cases)

Two base cases, Cases 31 and 32, have been performed for the third series of WASP runs. Case 31 is the base case for the 1 x 250 MW Lakhra Power Plant using underground coal from the Lakhra coal fields. Exhibit 3.7 shows the least cost plan developed using the WASP program for Case 31. The Lakhra Plant was accepted in the least cost plan with an in-service date of fiscal year 1992-93. This is a one year delay from the first possible in-service date for the Lakhra unit. Case 32 is the base case for the 2 x 250 MW Lakhra Power Plant using primarily surface mined coal from the Lakhra coal fields. Exhibit 3.8 shows the least cost plan developed for the surface mine fueled

Lakhra Power Plant. The plan shows that Lakhra is not accepted in the least cost plan until the year 2004. Essentially, in Case 32, the Lakhra Power Plant has been rejected for the anticipated 1992-95 time period. Appendices 3.1 and 3.2 (Volume X) show the summary reports from WASP for these cases.

In both base plans the nuclear power plants were preferred. Nuclear units were accepted as fast as they were made available. The imported coal plants and hydro-electric projects were given preference after the nuclear units and were similarly accepted as soon as offered. The nuclear coal and hydro-electric candidates were restricted in availability. The earliest possible in-service date for a nuclear unit as determined by WAPDA is fiscal year 1996-1997, and no more than one 900 MW unit could be constructed every 2 years thereafter.

The first feasible in-service date for the imported coal power plant first unit is fiscal year 1993-94. No more than two plants can be placed in service in any one year. The study was based on only two 4 x 460 MW power plants located in the Karachi region. At the time, the World Bank required that no more than 2000 MW be built in any region without using flue-gas desulfurization to reduce pollution. The difficulties of locating more than two sites with adequate cooling for 2000 MW and sufficient separation to prevent additional pollution is the basis of this decision. (Though, subsequent to the study, WAPDA has determined that up to 4000 MW could be developed at Khalifa Point and Bundel Island without desulfurization.) Twenty-nine hydro-electric units are candidates to be placed in service between 1991 and 2010.

Until the first imported coal units are introduced in fiscal year 1993-94, oil-fired power plants are the main competition for the Lakhra Power Plant. During fiscal year 1989-90, the three Pipri oil-fired Units 3, 4, and 5 are needed in both generation expansion plans. In Case 31, the 1 x 250 MW underground Lakhra case, Jamshoro Unit 4 and the 250 MW Lakhra unit are accepted in fiscal year 1992-93. The remaining Jamshoro Units 5 and 6 are delayed until fiscal year 1999-2000. This delay is the result of the introduction of the imported coal during the period from 1994 to 1998 and the availability of the second nuclear unit in 1999. Fiscal year 1999-2000 is thus the first year when the oil units can be economically accepted. If an additional site for a third 4 x 460 MW coal power plant were found, then the Jamshoro units would be further delayed.

In Case 32, the 2 x 250 MW surface Lakhra case, the Jamshoro Units 4 and 5 are accepted in fiscal year 1992-93. Jamshoro Unit 5 displaces Lakhra Unit 1 which is thus delayed until the

year 2004. In fiscal year 1999-2000, Jamshoro Unit 6 is accepted. Even in the year 2000 Jamshoro Unit 6 is accepted instead of Lakhra Surface in spite of a 3 percent per year escalation in the cost of oil.

In sensitivity Case 3A, the 2 x 250 MW Lakhra Power Plant, using primarily surface mined coal, is contrasted with oil-fired units where the cost of oil is higher ($24 per barrel in 1991). In this sensitivity case, the two Lakhra units are both accepted in the least cost plan in fiscal year 1992-93 (see Exhibit 3.9). The two Lakhra units replace Jamshoro Units 4 and 5, which are delayed until the years 2000 and 2004, respectively. In addition, the future domestic coal Units 1, 2, and 3 are advanced from the year 2006 in Case 32 to the years 1999 and 2000, leading to the delay of both the Jamshoro Units 5 and 6 and the future 4 x 400 MW oil-fired plants to the years 2004 and later. Appendix 3.3 (Volume X) shows the summary report from the WASP runs for this case.

Case 3A demonstrates that the Lakhra surface plant is accepted in the event that oil prices increase above the $16 per barrel used in the base case.

### 3.2.7 Coal Consumption

The underground base case with one 250 MW unit required an average of 1.40 million metric tons of coal per year of operation. The peak coal utilization was 1.47 million metric tons in the year 1997. J. T. Boyd estimates that the underground mine can produce 1.40 million metric tons of coal annually.

Case 3A, the surface case with two 250 MW units and oil at $24 per barrel in 1991, required an average of 1.31 million metric tons of coal for each unit. The maximum coal utilization in this plan was 3.85 million metric tons for the two-unit Lakhra Power Plant in the year 2008.

Exhibit 3.13 shows the coal utilization for these two cases for the 1987 through 2010 time period.

### 3.2.8 Capacity Factor

The GCII conceptual design for the Lakhra Power Plant assumed that the capacity factor of the plant would be approximately 70 percent. The capacity factor varies from year to year as the unit of generation and relative costs of the fuel change. For the underground case at $16 per barrel of oil in 1991, the capacity factor of Lakhra varies between 67 and 69 percent. For the surface case at $24 per barrel of oil in 1991, the range of annual capacity factor is between 52 and 69 percent.

The underground case stays within the preferred range of 65 to 70 percent, which represents baseload operation. The surface case runs primarily intermediate operation at below 60 percent capacity factor. Refer to Exhibit 3.14.

Additional information related to the capacity factor of the Lakhra units for the various conditions studied is contained in Appendices 3.1, 3.2, and 3.3. Also contained therein are the capacity factors for all other units considered in the studies for installation on the WAPDA system in the future. This information on capacity factors supplements the reports generated by the WASP computer program, which provides details for the various units in terms of capital costs, fuel costs and operation and maintenance expenses. These items are presented in terms of their foreign and local components.

### 3.2.9 Sensitivity Studies

GCII examined four major parameters in the study in order to determine the sensitivity of the two base case solutions to changes in the basic assumptions. The four parameters were: 1) cost of oil, 2) present worth discount rate, 3) capital costs for the Lakhra and imported coal plants, and 4) absence of a Lakhra Power Plant.

#### Lakhra Plan Using Underground Coal

For the cases with a 1 x 250 MW plant fueled with underground mined coal, the following results were found. The present worth cost over the entire study period was $17,823 million. This was a $61 million savings over the $17,884 million cost of a plan with no Lakhra units permitted for installation. In the case with one 250 MW Lakhra unit in 1993 it is also necessary to add a 300 MW oil unit to the system in that year. This latter unit would be Jamshoro No. 4. Without the Lakhra unit, it will be necessary to add another 300 MW oil unit, Jamshoro No. 5, to the system in 1993. The difference in the cumulative present worth between the two cases (with and without Lakhra) is less than 0.4 percent for the year 1993. This small difference is, of course, beyond the accuracy of the cost estimates used for these units in the study.

When the discount rate for the underground case was increased from 10 percent to 15 percent, the cost of the overall plan decreased to $11,737 million. Also, the least cost plan changed with Lakhra coming in service in fiscal year 1994-95, which is two years later than in the base case. Because of the two-year delay, the 1 x 250 MW Lakhra unit fueled with underground coal competes directly with imported coal units, and it is still accepted.

In the sensitivity case with full capital costs, the costs for the 1 x 250 MW power plant as originally estimated by GCII were used. The capital costs for the imported coal power plants were also increased to GCII's original estimates. For the base case these costs were reduced by 20 percent to reflect the worldwide depressed market for power plant equipment and construction. Further, the Lakhra fuel price was increased to $28 per metric ton. The results of this study were that the increased costs for the Lakhra Power Plant caused it to be delayed until fiscal year 1999-2000. The Jamshoro Unit 5 replaced Lakhra in fiscal year 1992-93. Delaying the Lakhra unit to the year 2000 represents a rejection of the present plans for the Lakhra Project.

The last sensitivity case for underground mined coal was with the cost of oil increased from $16 per barrel to $24 per barrel in 1991. In this case, the Lakhra Power Plant was brought into the least cost plan in fiscal year 1991-92, which is one year earlier than in the base case. The present worth cost of this plan was increased to $20,790 million, compared to $17,823 million in the base plan.

Lakhra Plan Using Surface Coal

For the 2 x 250 MW Lakhra cases fueled with predominantly surface mined coal, the present worth cost over the entire study period was $17,860 million, compared with $17,884 million without the Lakhra Plant and $17,922 million when Lakhra Units 1 and 2 are forced into the plan in 1992 and 1993, respectively. Therefore, in the surface case the Lakhra Plant costs an additional $62 million when compared to the best plan without Lakhra. Because the Lakhra Plant was not a least cost candidate in the surface case, the sensitivity cases for a 15 percent discount rate and full capital costs were not prepared.

The sensitivity cases with oil at $24 per barrel in 1991 showed that the 2 x 250 MW Lakhra Power Plant could be economically attractive if oil costs increase above the $16 per barrel used in the base case. In this plan, both Lakhra units are placed in service in fiscal year 1992-93. The present worth cost of this plan was $20,600 million, compared with $20,856 million without the Lakhra Plant, at the same oil prices. Therefore, at a cost of $24 per barrel of oil, the Lakhra Power Plant fired with surface mined coal saves $257 million.

A comparison of the alternate generation expansion plans on a present worth basis is shown on Exhibit 3.15.

### 3.2.10 Conclusions

Comparing the various base cases and sensitivity cases, GCII makes the following observations:

a. The Lakhra Underground Plant is economically attractive at $22.50 per metric ton. The net present worth of the plan utilizing Lakhra saves $61 million versus the plan without Lakhra. If capital costs and domestic fuel costs increase by 25 percent each, the Lakhra Plant will no longer be economically attractive. However, if either the capital or fuel costs increase for oil units, the Lakhra Plant becomes more economically attractive.

b. The Lakhra surface case is not economically attractive with oil at $16 per barrel in 1991, costing an additional $62 million in net present worth as compared to the plan without Lakhra.

c. The Lakhra surface case is economically attractive if the price of oil rises to $24 per barrel in 1991. This would result in a savings of $257 million in net present worth when compared to the plan without Lakhra.

d. The sensitivity cases demonstrate that the Jamshoro oil-fired Units 4, 5, and 6 are the prime competitors with the Lakhra Power Plant in both the underground and the surface cases. When the Jamshoro units are the best economic candidate in the 1992 to 1994 time period, Lakhra is delayed until the year 2000 or later. Similarly, when a Lakhra unit is accepted in the 1992 to 1994 time period, a Jamshoro unit is delayed until the year 2000 or later.

e. The imported coal plants are very attractive in all of the plans. Only the nuclear units are more attractive for base load operation. It is obvious that if WASP were provided with more than two 4 x 460 MW imported coal power plants, imported coal would displace all of the oil-fired and domestic coal-fired candidates in the year 2000 and later. Only the underground fueled Lakhra Plant was able to compete with imported coal.

It should be noted that the above conclusions are based on WASP studies that do not include shadow pricing factors in the determination of the economic loading order of various existing and future WAPDA generating units. The resultant effects of including shadow pricing in the determination of economic loading order is discussed in Appendix 3.6 (Volume X).

## 3.3 LAKHRA TRANSMISSION SYSTEM STUDIES

### 3.3.1 Background

Three types of transmission system planning computer studies were performed for the Lakhra Project. These studies were load flow, transient stability and short circuit analyses. The purpose of the load flow studies was to determine what new transmission system additions will be required to accommodate the power generated at the Lakhra Plant, and to make certain that no existing facilities will become overloaded for various operating conditions on the WAPDA system.

The purpose of the stability studies was to determine the maximum permitted time for the removal of severe fault conditions at various locations on the transmission system. This determination is necessary to avoid damage to equipment, as well as minimizing the possibility of long-term interruptions in the supply of power to consumers.

Finally, short circuit studies were performed to make certain that no major transmission system equipment will be subjected to currents that are beyond the short-term capability of such equipment.

The transmission studies were made in March 1985, for 3 x 300 MW generating units at three sites: Lakhra, Khanot, and Jamshoro. Subsequent to those studies, decisions have been made to define the Lakhra Project as 2 x 250 MW and to establish the site at Lakhra.

This section of the report presents a summary of the original transmission system analysis but has been modified to take into account the 2 x 250 MW plant located at the Lakhra site. The original transmission studies are suitable to demonstrate that a workable transmission plan has been developed. It is GCII's opinion that additional transmission studies are not required at this time and that the capital costs for transmission systems additions for the Lakhra Power Plant Project have been sufficiently defined for the purpose of feasibility analysis. Additional transmission studies will be necessary to confirm design during final design of the power plant.

In March 1986, WAPDA prepared a report entitled "Power Development Plan for Eliminating Load Shedding by January 1990." The features of this plan as they affect the original transmission study are included in the following discussion.

### 3.3.2 Study Parameters

The WAPDA electric grid presently uses voltages of 66 kV, 132 kV, 220 kV, and 500 kV. Since these voltages have been adopted as standard in Pakistan and since these voltage levels are sufficient for transmission of large blocks of power, it is proper to limit the scope of the transmission analysis to consider only these existing voltage levels.

A large proportion of the generating capacity in Pakistan is provided by hydro-electric units. The hydro-electric generation is located in the northern sections of Pakistan. During high-water periods, with peak hydro generation, the power flow on the 500 kV transmission grid will be from the north to the south. During low-water months, thermal generation is brought on-line to supplement the reduced hydro capability. As a result, the flow on the transmission system can be substantially different depending on hydrological conditions. The transmission for the Lakhra Power Plant is evaluated for both high-water and low-water periods.

### 3.3.3 Transmission System Planning Criteria

The following planning criteria and philosophy are used in planning the expansion of the transmission grid.

a. System Load and Hydro Conditions

Three system load levels and hydro conditions are modeled: peak-load high-water month, peak-load low-water month, and minimum-load low-water month. For load flow modeling, a load power factor of 90 percent is assumed for 1991 testing. Power factor correction to 95 percent is planned by WAPDA for years beyond 1991.

b. Standard Facility and Equipment Ratings

The approximate normal thermal ratings of 500, 220, and 132 kV transmission lines are 2300, 380, and 110 MVA, respectively. Standard 500/220 kV transformers are rated 450 MVA and 220/132 kV transformers, 160 MVA.

A 500 kV transmission circuit is typically compensated up to 60 percent using shunt reactors. Standard shunt reactors in use are 3 x 22 MVAR and 3 x 37 MVAR.

Additional characteristics of typical equipment are summarized on Exhibit 3.16.

c. Transmission System Reliability

The 500 kV and 220 kV are considered "primary" transmission. The purpose of primary transmission is to move large blocks of power from the generating plants to the load areas. The 132 kV and 66 kV are considered "secondary" transmission and carry the power from an area substation to a substation which supplies a small community or section of a city.

Different levels of reliability are built into the primary and secondary transmission systems. Since the primary transmission system supplies power to an entire area, it is designed to provide service continuity even with one circuit out of service. This is referred to as the "one-line-out criterion." The primary transmission system is planned such that the power can be moved from the generating plants to the major area substations for all system load levels and hydro conditions with any one primary transmission line out of service.

A special substation arrangement, referred to as breaker-and-half design, is used at primary transmission substations because this design provides a high level of reliability.

In comparison, the outage of a 66 kV or 132 kV secondary transmission circuit may cause loss of service continuity to some consumers. Also, a less reliable, but lower cost, substation design is used for secondary transmission compared to primary transmission.

The different levels of reliability are dictated by economic constraints. Similar philosophies are used in most transmission systems in the world.

d. Single-Phase and Spare Transformer Policy

Single-phase 150 MVA transformer banks are used for the 500/220 kV transformation. Single-phase banks are used for two reasons. First, inland transportation is facilitated by having 150 MVA single-phase banks instead of a larger 450 MVA three-phase bank. Second, a single-phase spare is provided for the entire system. The single-phase spare is not only lower in cost than a larger three-phase spare, but also can be moved more easily from point to point in the system.

The 160 MVA, 220/132 kV transformers are three-phase. A system spare is also maintained.

Primary transformer additions are planned on the basis of supplying load requirements with all transformer banks in service.

For the purpose of this analysis, single-phase generator step-up (GSU) transformers have been assumed. Single-phase GSU transformers will have approximately the size and weight of the single-phase 150 MVA autotransformer presently in use.

e. Voltage Regulation

The 220 kV and 500 kV primary transmission system is designed for a ±10 percent voltage variation. The power plants will be operated at leading power factor to absorb excess reactive power during off-peak-load periods.

f. Transient Stability

For transient stability testing, a three-phase fault is simulated. Fault clearing time is five cycles. This allows 2.5-3.0 cycles for relay operation and 2.0-2.5 cycles for breaker opening. No reclosing operations are used.

### 3.3.4 Primary Transmission System Development

An extensive 500 kV and 220 kV primary transmission system is being developed in a general north-south orientation paralleling the Indus River in Pakistan. The bulk of the hydro-electric generation is located in the north. The Lakhra coal project is located in the south near Hyderabad. The proposed 500 kV grid begins at the hydro-electric generation in the north and extends south, terminating at the 500/220/132 kV Jamshoro Substation near Hyderabad. From Jamshoro, 220 kV double circuit lines extend south to the city of Karachi and a short distance easterly across the Indus River.

The first 500 kV circuit into Jamshoro is presently in service but operating at 220 kV. This circuit will be energized at 500 kV and a 450 MVA, 500/220 kV transformer placed in service at Jamshoro in July 1987. A second 500 kV circuit and second 450 MVA, 500/220 kV transformer are planned for service in 1991.

In the original transmission study, two oil-fired steam generating units were planned for construction and connection to the transmission grid at 220 kV at Jamshoro. The first unit is 250 MW and is to be in service by late 1988. The second unit is 210 MW and is to be in service by early 1990. The plan for

elimination of load shedding now includes a total of four oil-fired units at Jamshoro, a 250 MW in 1988 and 3 x 210 MW in 1989-90.

The original study was based on Lakhra Unit 1 in service in late 1990 and Units 2 and 3 in 1992. It is now assumed that the 2 x 250 MW units will come in service in 1992.

The three sites evaluated in the original study are Jamshoro, Lakhra, and Khanot. The relative locations of the three sites are shown on Exhibit 3.17. Subsequent to the studies, the Lakhra site was chosen as the primary site.

### 3.3.5 Transmission Alternatives

There are three transmission voltages in the general vicinity of the three power plant sites: 132, 220, and 500 kV. A single 132 kV transmission line runs north from Jamshoro near the Khanot site to supply settlements along the west side of the Indus River. This is considered a secondary transmission circuit, as discussed in the Criteria Section of this report. This circuit is not capable of transmitting the power of a single 250 MW unit and need not be considered further for primary transmission purposes.

The 500 kV and 220 kV voltage levels are both reasonable candidates for connecting a 250 MW or larger power plant at Lakhra to the system. For the Jamshoro power plant site, both 220 kV and 500 kV are equally accessible. The Khanot power plant site is within 3 km of the existing 500 kV line. The Lakhra power plant site is 16 km from the existing 500 kV line. Jamshoro Substation is the nearest 220 kV substation to the Khanot and Lakhra sites.

Both 500 kV and 220 kV alternative transmission plans were developed for each of the three power plant sites. This resulted in six alternative transmission plans, which are shown on Exhibit 3.18. If the power plant is located at Jamshoro, no additional transmission will be needed and the generating units can be connected to either the 500 or 220 kV buses.

If the power plant is located at the Khanot site, it can be connected into the 500 kV system by building two sections of single circuit 500 kV lines, each 3 km long. The 220 kV alternative for the Khanot site would require building approximately 33 km of 220 kV transmission line from Khanot to Jamshoro. Two 220 kV circuits would be required with the first unit and one additional circuit would be needed with Unit 2.

If the power plant is located at the Lakhra site, two 16 km sections of 500 kV line will be required to connect the power plant to the 500 kV system. The 220 kV alternate requires approximately 46 km of 220 kV circuit from Lakhra to Jamshoro. Two 220 kV circuits would be required with the first unit and one additional 220 kV circuit would be needed with Unit 2.

### 3.3.6 Power Flow Analysis

Power flow (load flow) analysis was conducted for the 500 kV and 220 kV alternative transmission plans. The purposes of the power flow analysis are (1) to ensure lines and transformers are not loaded beyond their rated capability for both normal and contingency conditions, (2) to determine the system voltage profile for all expected operating conditions, (3) to evaluate transmission system losses, and (4) to investigate system reactive requirements. All power flow simulations were performed at the WAPDA offices in Lahore, Pakistan, using models of the entire national transmission grid. Diagrams of the power flow results are provided in Appendix 3.4 (Volume X). These diagrams show the power flow conditions on the transmission lines in the project area. These studies were based on 3 x 300 MW plants. However, the results can be extrapolated to the present 2 x 250 MW plant.

The following conditions were studied:

a. Years 1991, 1993, and 1995

b. High-water month peak load, low-water month peak load, and low-water month off peak load

c. Power plant sites of Jamshoro, Khanot, and Lakhra

d. Transmission voltages of 500 and 220 kV

e. Power plant sizes of 300 MW (one unit) and 900 MW (three units)

f. Line, transformer, and generator outage conditions

The results of the power flow testing are discussed in the following sections.

a. Transmission Facilities - Jamshoro Power Plant Site

At the Jamshoro site the power plant can be connected to either the 220 kV or the 500 kV buses. The power flow analysis showed that either location works equally well. During high-water periods, the power flow on the transmission at Jamshoro is from north to south and

during low-water periods from south to north. For the first unit, no additional transmission lines or transformers are required, other than the generator step-up transformer and circuit breakers needed to connect the unit. The two Jamshoro-Dadu 500 kV circuits and two 500/220 kV transformers at Jamshoro, which are planned to be in service prior to 1991, must be in place as planned.

Lakhra Units 2 and 3 (or the equivalent Lakhra Unit 2 and Jamshoro Oil Unit 3) may be connected to either the 220 kV or 500 kV buses. The power flow analysis showed that either location works equally well. However, a third 500/220 kV transformer at Jamshoro is required. With three units connected to the Jamshoro 500 kV bus, the third transformer is needed during high-water months to carry power from the 500 kV to the 220 kV, i.e., from north to south. The power flow from 500 kV to 220 kV could be even more than what is shown in the power flow case, if one or more of the oil-fired generators on the 220 kV bus is taken off line. Also, with the coal-fired units connected to the Jamshoro 220 kV bus, the third transformer is needed during low-water months to carry power from the 220 kV to the 500 kV, i.e., from south to north. Other than the third 500/220 kV transformer at Jamshoro and the generator step-up transformers, no additional transmission facilities are required with additional units at Jamshoro.

b. Transmission Facilities - Khanot Power Plant Site

The planned Jamshoro-Dadu 500 kV circuits pass within 3 km of the Khanot power plant site. The Khanot power plant can be connected to the 500 kV by building two 3 km sections of 500 kV line from the power plant to intersect the 500 kV Jamshoro-Dadu line. The Jamshoro-Dadu line would be opened at the connection point to create a Khanot-Dadu 500 kV circuit and a Khanot-Jamshoro 500 kV circuit. In effect, the Jamshoro-Dadu circuit is "looped" through the Khanot power plant. No additional transmission is required with Unit 1. As mentioned in the preceding section, the two Jamshoro-Dadu 500 kV circuits and the two 500/220 kV transformers at Jamshoro must be in service prior to 1991.

No additional transmission is required with Unit 2 at Khanot except for a third 500/220 kV transformer at Jamshoro. The power flow for units connected to the 500 kV at Khanot is similar to the power flow observed when the units are connected to the Jamshoro 500 kV bus. The third Jamshoro transformer is needed for the reasons previously discussed.

The 220 kV transmission alternate for the Khanot site requires building 220 kV lines from Khanot to Jamshoro. The distance between these sites is 33 km. Two 220 kV circuits are required with Khanot Unit 1, and one additional circuit is required with Unit 2. A third 500/220 kV transformer at Jamshoro is required with Unit 2 for the reasons discussed in the preceding section.

c. Transmission Facilities - Lakhra Power Plant Site

The 500 kV and 220 kV alternative plans for the Lakhra site are similar to the plans for the Khanot site except the Lakhra site is 16 km from the Jamshoro-Dadu 500 kV circuits and 46 km from Jamshoro 220 kV. A third 500/220 kV transformer at Jamshoro is required with Unit 2, as previously discussed.

The alternative plans for all three sites are shown on Exhibit 3.18. Substation one-line diagrams are provided as Exhibits 3.19 to 3.24.

### 3.3.7 Transient Stability Analysis

A transient stability analysis was made to determine if the proposed 500 and 220 kV transmission plans provide adequate transmission facilities to satisfy the one-line-out criterion. The stability tests used three-phase faults on the high voltage transmission near the power plant. The fault was cleared in five cycles by switching out the faulted transmission line. The machines were modeled using classical representation. Three conditions were investigated. Refer to Appendix 3.4 for case results.

Case 1 is 1991 conditions with a single 300 MW unit at Lakhra connected to Jamshoro via two 220 kV circuits. A three-phase fault near Lakhra causes the outage of one of the 220 kV circuits. The 300 MW Lakhra unit remains connected by one 220 kV circuit. The case is stable. This case is representative of a single 300 MW Khanot unit connected via two 220 kV circuits to Jamshoro. Also, this case is representative of a 250 MW unit.

Case 2 is 1993 conditions with three 300 MW coal-fired units connected on the Jamshoro 500 kV bus. A three-phase fault near Jamshoro causes outage of one of the Jamshoro-Dadu 500 kV circuits. The case is stable. This case is representative of 2 x 250 MW coal units and the third oil unit at Jamshoro.

Case 3 is 1993 conditions with three 300 MW coal-fired units at Lakhra connected via a 500 kV loop on the Jamshoro-Dadu

circuit. A three-phase fault near Lakhra causes outage of the Lakhra-Jamshoro 500 kV circuit and leaves the Lakhra power plant connect via a single 500 kV circuit to Dadu. The case is stable. This case is also representative of three 300 MW coal-fired units at Khanot connected into the 500 kV system and representative of the 2 x 250 MW plan.

These three cases are sufficient to demonstrate that the proposed 500 kV and 220 kV alternative transmission plans provide adequate transmission capability to satisfy the one-line-out criterion.

### 3.3.8 Short Circuit Analysis

The interrupting rating of the 500 and 220 kV circuit breakers used on the WAPDA system is 40 kA. The interrupting rating of the 132 kV circuit breakers at Jamshoro is 31.5 kA. The three-phase fault levels for all alternative transmission plans are given on Exhibit 3.25. As shown, the fault levels are within the ratings of the breakers.

### 3.3.9 Capital Costs

A comparison of transmission line length and major substation equipment required for each plan is presented on Exhibit 3.26. The estimated capital costs of the six alternative transmission plans are provided on Exhibit 3.27. Cost estimate details are provided in Appendix 3.5 (Volume X). These capital costs are summarized below:

| | Transmission Capital Costs July 1985 U.S. $ x 1,000 | |
|---|---|---|
| Plant Location | 220 kV | 500 kV |
| Jamshoro | 13,532 | 16,871 |
| Lakhra | 27,171 | 27,602 |
| Khanot | 24,553 | 22,155 |

The 220 kV plan is the lower cost alternative for Jamshoro. For Lakhra, the 220 kV and 500 kV alternatives are about equal in cost. The 500 kV plan is the lower cost alternative for the Khanot site.

The Jamshoro site has the lowest transmission cost of the three sites, since the new units can be connected into the existing substation and no additional transmission line need be built. At both the Lakhra and Khanot sites, a new switchyard and new transmission lines are required.

### 3.3.10 Economic Comparison

An economic comparison of the alternative transmission plans is provided on Exhibit 3.28. The annual fixed charges on the capital cost, annual operating and maintenance charges and annual cost of transmission losses (Exhibit 3.29) between the Lakhra/Khanot sites and Jamshoro Substation are included in the analysis. The total of these costs is summarized below:

| Plant Location | Total Annual Cost U.S. $ x 1,000 | |
|---|---|---|
| | 220 kV | 500 kV |
| Jamshoro | 1,746 | 2,178 |
| Lakhra | 4,889 | 3,718 |
| Khanot | 4,161 | 2,971 |

The 220 kV plan is the lower cost alternative if the power plant is located at Jamshoro. The 500 kV alternative is preferred if the power plant is located at either Lakhra or Khanot.

### 3.3.11 Conclusions and Recommendations of the Lakhra Transmission System Studies

Three power plant sites were investigated. A recommended transmission plan is provided for each site. (Subsequent to the transmission study, the Lakhra site has been identified as the plant site.)

a. Jamshoro Recommended Transmission Plan

It is recommended that coal-fired units located at the Jamshoro site be connected to the existing 220 kV Jamshoro bus. No additional transmission from Jamshoro is required with the first 250 MW unit. However, the two 500 kV Jamshoro-Dadu circuits and two 450 MVA, 500/220 kV transformers at Jamshoro must be in service prior to this unit, as currently planned.

It is also recommended that coal-fired Unit 2 located at Jamshoro be connected to the 220 kV bus. In addition, it is recommended that a third 450 MVA, 500/220 kV transformer be installed at Jamshoro with the second unit.

b. Lakhra or Khanot Recommended Transmission Plan

For either the Lakhra or Khanot power plant site, it is recommended that the new coal-fired generators be connected to the 500 kV transmission. One of the 500 kV Jamshoro-Dadu circuits is to be "looped" through the power plant site with the first unit. The two 500 kV Jamshoro-Dadu

circuits and two 450 MVA, 500/220 kV transformers at Jamshoro must be in service prior to this first unit, as currently planned.

The 500 kV loop to Lakhra or Khanot will provide sufficient transmission capacity for future coal-fired units. The major facilities required with Unit 2 are the generator step-up transformer and the circuit breakers to connect the unit to the 500 kV bus. Also, it is recommended that a third 450 MVA, 500/220 kV transformer be installed at Jamshoro when Unit 2 is placed in service.

### 3.3.12 Facilities for Supply of Mining, Colony and Constructions Loads

Substantial quantities of power will be required for mining operations, for supply to the colony and for power plant construction. New transmission lines will have to be constructed to supply these loads. The purpose of this section is to outline the design considerations and present a recommended transmission plan. This plan is based on the assumption that a 2 x 250 MW power plant will be built at the Lakhra site and supplied by the surface mining option.

#### 3.3.12.1 Load Requirements

GCII has been advised by the J. T. Boyd Company of the following electrical loads to support mining operations and colony:

| | Load kW |
|---|---|
| Five years before the power plant is in operation | 1,095 |
| Four years before the power plant is in operation | 5,523 |
| Three years before the power plant is in operation | 10,331 |
| Two years before the power plant is in operation | 19,210 |
| One year before the power plant is in operation | 27,234 |
| One year after the power is in operation | 30,986 |
| Five years after the power plant is in operation | 31,107 |

GCII estimates that the power demand associated with the construction of the power plant will be approximately 4 MVA.

The total power requirement (mining operations, colony and power plant construction) could easily be 30 to 35 MVA before the plant is in service. This value has been assumed as the design load for the initial transmission system.

3.3.12.2 Transmission System

The Lakhra site is 16-20 km from a 132 kV transmission line and a 500 kV transmission line. According to WAPDA system plans, a second 500 kV line will be placed in service. All three of these lines are connected between the Dadu and Jamshoro Substations.

One alternative is to connect to the 132 kV line to supply initial loads. Power flow cases were reviewed to determine if the 132 kV system would have enough capacity to accomplish such a plan. This review indicated that the 132 kV line could thermally carry the peak load expected before the plant is in service, provided the 132 kV line between Jamshoro and Lakhra is in service. If this line is out of service the peak load cannot be supplied via 132 kV from Dadu Substation because of low voltage. Also, over the life of the mining operation it is anticipated that the 132 kV line will not have sufficient capacity for both the mining load and for normal load growth in the areas it presently serves. Therefore, GCII recommends that any power system additions needed to supply the initial mining requirements be planned and designed to supply the ultimate power demand of the mining operation. Further, the best plan for supplying the mining load over its intended life is via a separate, direct source from the power plant.

Based on GCII's understanding of the proposed method of coal mining for the Lakhra Project, it appears that large electrical loads will be suddenly applied and removed from the power system. These loads are cyclic over a short time period. To avoid low voltages and flicker at the customer utilization voltage at the colony, GCII is of the opinion that the supply to the colony should be isolated to a reasonable extent from that required to support the mining operations. To accomplish this, the colony should be supplied from a strong voltage source. For these reasons GCII recommends that the colony be supplied at 132 kV.

a. Substation Requirements

A sketch of the proposed 500/132 kV substation for the power plant is presented on Exhibit 3.30. The 500/132 kV

transformer bank would be composed of three 30 MVA single-phase units, with an additional unit maintained on-site as a spare. Such a spare is needed if mining and colony loads are to be supplied in the event of a failure of one of the single-phase units. At the 132 kV voltage level a "single breaker arrangement" would be used, with 132 kV breakers on the transformer bank and lines to the mining operation and colony. A 6.9 kV tertiary winding on the transformer will provide the source of construction power for the power plant.

b. Transmission Facilities

The recommended method of supplying the initial mining and colony loads is to construct one of the two 500 kV lines that ultimately will be required when the power plant is placed in operation. This line would be approximately 16 km long. The new 500 kV line, the 500/132 kV transformer bank, 500 kV circuit breakers and the 132 kV breakers must be in service before the other construction associated with the Lakhra Project begins. For this reason the construction and installation of these transmission and substation facilities should begin at the earliest possible date. An important advantage of this plan is that no major power system facilities are placed in service that ultimately are not required as part of the project.

An alternative being considered by WAPDA is to build a 132 kV line from the existing 132 kV line to the mine and colony area to supply the initial load requirements. The advantage is that the 132 kV line can be designed and built on a shorter schedule than the 500 kV line.

### 3.3.12.3 Capital Cost Estimates

The transmission system capital cost estimate was revised to include a 500/132 kV substation to supply mining and colony loads and is provided on Exhibit 3.31.

The costs of the 132 kV lines from the power plant to the mining operations and the colony are included in the estimates presented in the project report of the mining consultant. It is understood by GCII that these estimates include the cost of the facilities needed to permit temporary transfer of the mining load to the colony 132 kV line (and the colony load to the mining 132 kV line) during outage conditions and maintenance periods.

### 3.3.13 Plant and Transmission Costs

The WASP-3 generation planning studies were prepared without the inclusion of transmission costs. This is the customary practice in performing studies of this type, since transmission costs are a very small component of overall project cost. Also, transmission costs usually cannot be determined until after the generation plans have been established. Generation and transmission plans have been discussed in preceding sections of this chapter. The combined plant and transmission capital costs are provided on Exhibit 3.32.

## 3.4 IMPORTED COAL TRANSMISSION STUDIES

### 3.4.1 Purpose

One alternative to the Lakhra coal-fired power plant is an imported coal-fired power plant. A feasibility study has been prepared by Intercontinental Engineering Ltd. (INTEG) to determine the economical and technical parameters of an imported coal power plant located in the vicinity of the city of Karachi. In order to gain additional insight into comparative cost between the Lakhra Project and the Import Coal Project, GCII was instructed by USAID to coordinate study efforts with INTEG. Further, GCII was instructed in August 1985 to develop preliminary transmission system costs for the Imported Coal Project since the INTEG feasibility study was not available at the time. This section provides the results of the August 1985 study. The transmission costs developed for the imported coal plant will aid the evaluation and comparison of the Lakhra and Imported Coal Projects.

### 3.4.2 Background

At the time this analysis was made, the INTEG feasibility study was underway and there was very little specific economic and technical information available to GCII. INTEG did provide the following information. Five sites are being evaluated. The sites are located both east and west of Karachi. The earliest that a generating unit can be in service is estimated to be 1993 or 1994. Generator unit sizes are 400 to 600 MW. The ultimate generation at any location is 800 to 4000 MW depending upon the site.

WAPDA was also preparing their own studies concerning an imported coal unit. For study purposes, WAPDA assumed a power plant site near Gaddani, which is located approximately 60 km west of Karachi. Two plant sizes were being considered: 2 x 300 MW and 2 x 500 MW. The plant is planned to be put in service during 1993-94.

At the time, neither INTEG nor WAPDA had developed any transmission plans for the imported coal plant. The present bulk power transmission in the vicinity of Karachi is 500 kV into Jamshoro Substation near the city of Hyderabad and a double circuit 220 kV circuit from Jamshoro to Karachi. The Karachi area load is supplied by the Karachi Electric System Company (KESC). The double circuit 220 kV circuit is the main interconnection between KESC and WAPDA.

A double circuit 220 kV line was built from Jamshoro to KESC instead of a 500 kV circuit because there was concern that

salt contamination would cause operating difficulties at 500 kV. The prevailing winds out of the south pick up salt from the ocean and carry it inland over Karachi. The double circuit 220 kV circuit was built with extra insulation to mitigate contamination problems. Also, two 954 ACSR conductors per phase were used to provide a higher thermal capability than standard 220 kV design. Each 220 kV circuit has a rated thermal capability of 600 MVA. The 220 kV substations in the Karachi area are gas insulated, which minimizes salt contamination problems.

### 3.4.3 Assumptions

GCII has made the following assumptions regarding the imported coal plant for the purpose of establishing transmission plans:

a. The power plant site is assumed to be at Gaddani. This is approximately 60 km from the existing 220 kV substation supplying KESC and 189 km from the Jamshoro 500 kV Substation.

b. A transmission plan is determined for three different imported coal power plant sizes: 300 MW, 600 MW and 1200 MW. This will provide a range of transmission costs as a function of power plant size to aid in the economic evaluation of the project.

c. Both high-water and low-water periods are studied. During low-water periods, the WAPDA system has received 330 MW from KESC via the new 220 kV double circuit discussed above. In future years, it is expected that the amount of power from the KESC system will gradually decrease as the KESC system load increases. For study purposes, it was decided to plan the transmission system to carry the total imported coal plant plus an additional 300 MW from the KESC system. Conversely, during high-water periods the KESC system was assumed to be importing 600 MW from WAPDA.

### 3.4.4 Transmission Alternatives

The transmission alternative plans for the various sizes of imported coal plants are shown on Exhibits 3.33 through 3.36. Substation one-line diagrams are provided on Exhibits 3.37 to 3.48.

For a 300 MW imported coal plant, two 220 kV circuits are required. One 220 kV circuit connects the plant to the KESC system; the other connects the plant to Jamshoro. See Exhibits 3.33, 3.37, 3.42, and 3.45.

For a 600 MW imported coal plant, three or four 220 kV circuits are required. A double circuit connects the plant to KESC and a single (or double) circuit connects the plant to Jamshoro. Refer to Exhibits 3.34, 3.38, 3.39, 3.43, 3.45, and 3.46.

For a 1200 MW plant, both 220 kV and 500 kV alternative transmission plans were studied. The 220 kV plan consists of a double circuit from the plant to KESC and a double circuit from the plant to Jamshoro. The 500 kV plan is similar except the plant to Jamshoro circuits are 500 kV. These two plans are shown on Exhibits 3.35, 3.36, 3.40, 3.41, 3.43, 3.44, 3.47, and 3.48.

### 3.4.5 Power Flow Analysis

Power flow analyses were performed on the alternative transmission plans. Diagrams of the power flow results are provided in Appendix 3.4. The power flow analysis confirmed that the proposed transmission plans were workable for both normal and one-line-out conditions, as well as power interchanges between WAPDA and KESC.

### 3.4.6 Transient Stability Analysis

Transient stability models were established for the imported coal transmission alternatives similar to the stability models used for the Lakhra studies. Three-phase faults were simulated near the imported coal plant. The fault was cleared and a transmission circuit opened after 5 cycles (0.1 second). For the 300 MW plan, the system was stable. For all other plans, the imported coal plant, the KESC generation, and the Jamshoro generation remained in synchronism; however, these generating units gradually (over a period of approximately one second) pulled out of synchronism with Tarbella and other hydro generation located in the northern part of the system.

These results were reviewed with the WAPDA system planning engineers. It was decided that the conditions modeled exceeded the model capability. A more detailed stability model with governors and exciters represented would probably be needed to make the model work. It was subsequently concluded that the transmission plans developed for the imported coal plant were sufficient and that transient stability could be maintained. More detailed transient stability testing would be appropriate only after more definitive technical parameters for the imported coal units are known.

### 3.4.7 Cost Estimates

Cost estimates were prepared for the alternative transmission plans. These are summarized on Exhibit 3.49. Because of the potential salt contamination, a different transmission design would be required for the 220 kV and 500 kV lines than that which was used for the Lakhra alternatives. For example, the 220 kV transmission assumed for the Lakhra Project was the standard design used by WAPDA. For an imported coal plant the 220 kV line would be designed similar to the existing 220 kV line from Jamshoro to Karachi. This line has two conductors per phase and has more insulation on its southern section. This results in a 35 percent greater capital cost than the standard 220 kV design. The 500 kV design would also be modified to minimize problems caused by salt contamination. These modifications could include the use of conductors less susceptible to corrosion and insulators less affected by salt contamination. This results in a 15 percent greater capital cost than for standard design. The unit transmission costs are summarized in Appendix 3.5.

A gas-insulated substation design is preferred where there is salt contamination, since the substation is almost totally enclosed. At 220 kV and 500 kV, the cost of a gas-insulated substation is approximately the same as an open air substation. Therefore, gas-insulated substation facilities are assumed for the imported coal switchyard.

### 3.4.8 Economic Comparison

An economic comparison of the alternative plans is provided on Exhibit 3.50. For 300 MW or 600 MW generation at Gaddani, 220 kV is the proper voltage for connecting the power plant to the WAPDA and KESC systems. For 1200 MW generation, the 500 and 220 kV alternates are nearly equal on an economic basis. The cost of transmission system losses (Exhibit 3.51) has been included in this analysis. The final decision on which plan to adopt would depend on the ultimate planned development for the Gaddani site. For example, if a third 600 MW unit is contemplated, then the 500 kV plan is more desirable.

### 3.4.9 Conclusions

The final decision on the transmission requirements for the imported coal plant can be made only after specifics of the plant are determined, such as site, unit size, number of units, in-service date, etc. By making certain assumptions, preliminary transmission plans have been developed for various plant sizes to provide transmission cost data for comparison with

the Lakhra Project. Transmission capital costs as a function of plant size are as follows:

| Imported Coal - Transmission Capital Cost | |
|---|---|
| Plant Size | July 1985 U.S. Dollars x 1000 |
| 1 x 300 MW | 30,381 |
| 1 x 600 MW | 39,184 |
| 2 x 600 MW | 137,107 |

A large power plant complex will most likely require 500 kV transmission. The capital cost of a 500 kV transmission plan for a 1200 MW imported coal plant at Gaddani is $137 million.

The 300 MW and 600 MW plant sizes have lower costs associated with the transmission system on a dollar-per-kilowatt basis, since they can be integrated into the system grid at 220 kV rather than 500 kV.

EXHIBITS

# PAKISTAN PLANNING COMMISSION
## 1987-2010 LOAD FORECAST
## USED IN THE THIRD SERIES OF
## GENERATION PLANNING STUDIES

| Year | Peak Load (MW) | Minimum Load (MW) | Growth (%) | Energy (GWHr) |
|---|---|---|---|---|
| 1987 | 5,361 | 1,785 | - | 29,446 |
| 1988 | 5,920 | 1,971 | 10.4 | 32,516 |
| 1989 | 6,531 | 2,175 | 10.3 | 35,873 |
| 1990 | 7,205 | 2,399 | 10.3 | 39,578 |
| 1991 | 7,909 | 2,634 | 9.8 | 43,347 |
| 1992 | 8,625 | 2,872 | 9.1 | 47,380 |
| 1993 | 9,404 | 3,131 | 9.0 | 51,658 |
| 1994 | 10,285 | 3,425 | 9.4 | 56,504 |
| 1994 | 11,258 | 3,749 | 9.5 | 61,845 |
| 1996 | 12,318 | 4,102 | 9.4 | 69,672 |
| 1997 | 13,477 | 4,488 | 9.4 | 74,043 |
| 1998 | 14,747 | 4,911 | 9.4 | 81,021 |
| 1999 | 15,903 | 5,296 | 7.8 | 87,373 |
| 2000 | 17,150 | 5,711 | 7.8 | 94,227 |
| 2001 | 18,439 | 6,140 | 7.5 | 101,609 |
| 2002 | 19,943 | 6,641 | 8.2 | 109,580 |
| 2003 | 21,507 | 7,162 | 7.8 | 118,173 |
| 2004 | 22,978 | 7,651 | 6.8 | 126,262 |
| 2005 | 24,551 | 8,175 | 6.8 | 134,904 |
| 2006 | 26,232 | 8,735 | 6.8 | 144,143 |
| 2007 | 28,02[illegible] | 9,333 | 6.8 | 154,018 |
| 2008 | 29,947 | 9,972 | 6.8 | 164,564 |
| 2009 | 31,998 | 10,655 | 6.8 | 175,843 |
| 2010 | 34,191 | 11,385 | 6.8 | 187,894 |

## FUEL COSTS

| Fuel Type | Fuel Costs in 1986 | $/GCal | Annual Escalation Rate |
|---|---|---|---|
| Domestic Coal | | | |
| Lakhra - Surface Mine | $33.00 /MT | 10.36 | 0% |
| Lakhra - Underground Mine | $22.50 /MT | 7.06 | 0% |
| Future (c) | $30.00 /MT | 9.42 | 0% |
| Imported Coal | $52.50 /MT | 7.85 | 1% |
| High Speed Diesel | - | 11.36 | 3% |
| Furnace Oil | $13.80 /Bar. | 8.74 | 3% |
| Natural Gas | - | 8.74 | 3% |
| Nuclear Fuel | - | 1.63 | 1% |

**NOTES:**

(a) HEATING VALUE

| Fuel Type | Heating Value (MCal) | Heating Value (BTU) |
|---|---|---|
| Domestic Coal | 3,186 MCal/MT | 5,750 BTU/lb |
| Imported Coal | 6,371 MCal/MT | 11,500 BTU/lb |
| Furnace Oil | 1,579 MCal/Bar. | 6,265,000 BTU/Bar. |

(b) Cost of energy not served was 20 cents per kWHr.

(c) Fuel cost for future domestic coal generating units assumes that new coal fields will be discovered which will permit construction of these units. These units are unrelated to the Lakhra Project.

## EXISTING GENERATION

| WASP Name | Description | No. of Units | Existing Capacity (MW) | Rehab. Capacity (MW) | Retirement Date |
|---|---|---|---|---|---|
| KANP | Kanup Nuclear | 1 | 70 | 70 | - - - |
| KWWS | KESC | 2 | 66 | 66 | Aug. 1990 |
| MESC | KESC | 2 | 20 | 20 | Aug. 1991 |
| PPR1 | Pipri Oil | 2 | 420 | 420 | - - - |
| RESC | KESC | 1 | 9 | 9 | Aug. 1991 |
| FDGT | Faisalabad GT | 8 | 138 | 76 | Aug. 2004 (b) |
| FDST | Faisalabad Oil | 2 | 102 | 106 | Aug. 1996 (a) |
| GUU1 | Guddu Gas | 2 | 190 | 204 | Aug. 2010 (a) |
| GUU2 | Guddu Gas | 1 | 210 | 210 | Aug. 2010 (a) |
| GUD4 | Guddu Gas | 1 | 210 | 210 | - - - |
| GUGT | Guddu GT | 4 | 400 | 400 | - - - |
| HDOL | Hyderabad Oil | 2 | 14 | 14 | Aug. 1990 |
| HDST | Hyderabad Gas | 2 | 14 | 14 | Aug. 1995 |
| KAGT | Kot Addu GT | 2 | 200 | 200 | - - - |
| KOU1 | Kotri Gas | 2 | 12 | 24 | Aug. 1999 (a) |
| KOGT | Kotri GT | 4 | 65 | - | (b) |
| KTGT | Korangi GT | 4 | 80 | 80 | - - - |
| KTP1 | Korangi Oil | 2 | 132 | 132 | Aug. 1996 |
| KTP2 | Korangi Oil | 2 | 250 | 250 | Aug. 2000 |
| MULT | Multan Oil | 4 | 212 | 220 | Aug. 1994/97 (a) |
| QTG1 | Quetta GT | 1 | 4 | 5 | Aug. 1997 (a) |
| QTG2 | Quetta GT | 1 | 7 | 10 | Aug. 1997 (a) |
| QTG3 | Quetta GT | 1 | 20 | 20 | Aug. 1997 (a) |
| QTG4 | Quetta GT | 1 | 28 | 28 | Aug. 1997 (a) |
| QTSU | Quetta Coal | 2 | 12 | 16 | Aug. 1999 (a) |
| SHG1 | Shadhra GT | 2 | 20 | 20 | Aug. 1995 (a) |
| SHG2 | Shadhra GT | 4 | 52 | 52 | Aug. 1998 (a) |
| SKST | Sukkur Gas | 4 | 24 | 48 | Aug. 1999 (a) |
| HYD1 | Tarbela Hydel | - | 1,750 | 1,750 | - - - |
| HYD2 | Low Head Hydel | - | 1,156 | 1,156 | - - - |

(a) These units are to be rehabilitated by June 1989.

(b) All twelve of the Faisalabad and Kotri gas turbines are scheduled for rehabilitation by June 1989. At each of the Faisalabad and Kotri power plants, four gas turbines are to be incorporated in combined cycle plants by the addition of a 40 MW steam heat recovery unit. Earliest in-service date is February 1990 (see Exhibit 3.5). The remaining four gas turbines at Faisalabad will continue to be used until retirement as shown.

## COMMITTED GENERATION EXPANSION BASED ON THE POWER DEVELOPMENT PLAN FOR ELIMINATION OF LOAD SHEDDING BY 1990

| WASP Name | Description | Unit No. | Capacity (MW) | Commissioning Date |
|---|---|---|---|---|
| KAGT | Kot Addu GT | 3 & 4 | 200 | Jan. 1987 |
| GUCC | Guddu Comb. Cyc. | 5 | 100 | Dec. 1987 |
| GUCC | Guddu Comb. Cyc. | 6 | 100 | Jan. 1988 |
| KAGT | Kot Addu GT | 5 & 6 | 200 | Nov./Dec. 1988 |
| JOF1 | Jamshoro Oil | 1 | 250 | Dec. 1988 |
| KAGT | Kot Addu GT | 7 & 8 | 200 | Jan./Feb. 1989 |
| KACC | Kot Addu Comb. Cyc. | 9 & 10 | 200 | Jun. 1989 |
| HYD2 | Mangla Hydel | 9 & 10 | 200 | Sep. 1989 |
| JOF2 | Jamshoro Oil | 2 & 3 (a) | 420 | Dec. 1989 |
| HYD2 | Tarbela Hydel | 11, 12 & 13 | 1,296 | Jan./Sep. 1990 |
| MULT | Multan Oil | 1 | 210 | Oct. 1990 |
| HYD2 | Tarbela Hydel | 14 | 432 | Jan. 1991 |
| MULT | Multan Oil | 2 & 3 | 420 | Apr./Oct. 1991 |

(a) Subsequent to the study, Jamshoro Unit 4, 210 MW was committed. A similar unit (though 300 MW) was included in the WASP study as shown on Exhibit 3.5.

## CANDIDATES FOR FUTURE GENERATION

| WASP Name | Description | Maximum Units | Capacity (MW) | Earliest Commissioning Date |
|---|---|---|---|---|
| OIL1 | Pipri Oil | 3 | 200 | Jun. 1989 (a) |
| OIL2 | Jamshoro Oil | 3 | 300 | Jun. 1991 (b) |
| OIL3 | Future Oil | 4 | 400 | Jun. 1995 (c) |
| LAKU | Lakhra Underground | 1 | 250 | Dec. 1991 (d) |
| LAKS | Lakhra Surface Mine | 2 | 250 | Dec. 1991 (e) |
| IMCL | Imported Coal | 8 | 460 | Dec. 1993 (f) |
| DMCL | Future Domestic Coal | 3 | 250 | Jun. 1995 (g) |
| V-GT | Future GT | - | 100 | Dec. 1989 |
| FDCC | Faisalabad Comb. Cyc. | 1 | 116 | Feb. 1990 |
| KOCC | Kotri Comb. Cyc. | 1 | 116 | Feb. 1990 |
| NUKE | Future Nuclear | - | 900 | Dec. 1996 (h) |

(a) Incremental units at Pipri Power Plant (KESC). The existing common facilities limit these to no more than three additional units (units 3, 4 and 5 at Pipri).

(b) Incremental units at Jamshoro Power Plant. The existing common facilities limit these to no more than three additional units (units 4, 5 and 6 at Jamshoro).

(c) Future 4 x 400 MW oil-fired power plants.

(d) Lakhra Power Plant, 1 x 250 MW fueled with underground mined coal from the Lakhra coal fields. Proven coal reserves limit this option to one unit.

(e) Lakhra Power Plant, 2 x 250 MW fueled with surface mined coal from the Lakhra coal fields. Proven coal reserves limit this option to no more than two units.

(f) Future coal fired 8 x 460 MW power plants using imported coal from new port facilities to be located in the Karachi area. To limit local pollution levels, no more than 2000 MW are to be allowed at any one locality. It is anticipated that no more than two plants of this type can be constructed in the Karachi area. (Subsequent to the study, WAPDA has determined that up to 4000 MW could be developed at Khalifa Point or Bundal Island without desulphurization.)

(g) Future domestic coal units, assuming that new coal fields will be discovered which will permit these power plants to be constructed.

(h) Future nuclear power plants. Earliest in-service date is 1996/97 as determined by WAPDA and no more than one of these new units can be commissioned every 2 years.

## CAPITAL COSTS

| WASP Name | Depreciable Costs Local ($/kW) | Depreciable Costs Foreign ($/kW) | Non-Depreciable Costs Local ($/kW) | Non-Depreciable Costs Foreign ($/kW) | Plant Life (Yrs) | Construction Time (Yrs) |
|---|---|---|---|---|---|---|
| OIL1 | 180.00 | 377.00 | 0.00 | 31.60 | 30 | 3.5 (a) |
| OIL2 | 171.00 | 357.00 | 0.00 | 31.40 | 30 | 3.8 (b) |
| OIL3 | 186.00 | 363.00 | 0.00 | 31.40 | 30 | 3.8 (c) |
| LAKU | 406.00 | 434.00 | 8.70 | 7.10 | 30 | 4.0 |
| LAKS | 296.00 | 438.50 | 11.55 | 11.55 | 30 | 4.0 (d) |
| IMCL | 212.00 | 469.00 | 0.00 | 42.70 | 30 | 4.0 (e) |
| DMCL | 393.00 | 580.00 | 10.90 | 10.10 | 30 | 4.0 |
| NUKE | 328.00 | 677.00 | 0.00 | 105.60 | 30 | 8.0 |
| V-GT | 43.00 | 273.00 | 0.00 | 52.10 | 25 | 2.0 |
| FDCC | 141.90 | 126.50 | 0.00 | 30.20 | 20 | 2.5 |
| KOCC | 138.70 | 126.20 | 0.00 | 30.20 | 20 | 2.5 |

(a) Incremental units at Pipri Power Plant (KESC). Does not include capital costs for the common facilities which have already been constructed.

(b) Incremental units at Jamshoro Power Plant. Does not include capital costs for the common facilities which have already been constructed.

(c) Future 4 x 400 MW oil-fired power plants. Capital costs are averaged to include the common facilities proportionally in each 400 MW unit.

(d) Lakhra 2 x 250 MW using surface mined coal from the Lakhra coal fields. Capital costs are averaged to include the common facilities proportionally in each 250 MW unit. Note that the report describes a 2 x 250 MW plant. The decision to use the costs for a 2 x 275 MW plant was based upon a concern raised by ICF Inc. to obtain better utilization of the second open pit coal mine. This would slightly lower the estimate for the fuel costs. Since the remainder of the report is based on the 250 MW unit size, this was used in all descriptions of this case.

(e) Future 4 x 460 MW imported coal power plants. Capital costs are averaged to include the common facilities proportionally in each 460 MW unit.

# CASE 31
# LEAST COST GENERATION EXPANSION PROGRAM
# FOR THE LAKHRA UNDERGROUND MINE ALTERNATIVE

| WASP Name | Description | Unit No. | Capacity (MW) | Commissioning Date |
|---|---|---|---|---|
| V-GT | Gas Turbines | 1, 2 & 3 | 300 | Jun. 1989 |
| OIL1 | Pipri (KESC) | 3, 4 & 5 | 630 | Jun. 1990 |
| V-GT | Gas Turbines | 4 & 5 | 200 | Jun. 1990 |
| KOCC | Kotri Comb. Cyc. | 7 | 40 | Jun. 1991 |
| HYD2 | Low Head Hydel | Chashma | 200 | Jun. 1991 |
| FDCC | Faisalabad Comb. Cyc. | 9 | 40 | Jun. 1992 |
| HYD2 | Low Head Hydel | Taunsa | 110 | Jun. 1992 |
| OIL2 | Jamshoro Oil | 4 | 300 | Jun. 1993 |
| LAKU | Lakhra | 1 | 250 | Jun. 1993 |
| HYD2 | Low Head Hydel | Jinnah | 110 | Jun. 1993 |
| IMCL | Imported Coal | 1 & 2 | 920 | Jun. 1994 |
| V-GT | Gas Turbine | 6 | 100 | Jun. 1994 |
| IMCL | Imported Coal | 3 | 460 | Jun. 1995 |
| HYD1 | Tarbela | 15 & 16 | 864 | Jun. 1995 |
| HYD1 | Kalabagh | 1 & 2 | 600 | Jun. 1995 |
| IMCL | Imported Coal | 4 & 5 | 920 | Jun. 1996 |
| HYD1 | Kalabagh | 3 & 4 | 600 | Jun. 1996 |
| NUKE | Nuclear | 1 | 900 | Jun. 1997 |
| IMCL | Imported Coal | 6 | 460 | Jun. 1997 |
| HYD1 | Kalabagh | 5 | 300 | Jun. 1997 |
| IMCL | Imported Coal | 7 & 8 | 920 | Jun. 1998 |
| HYD1 | Kalabagh | 6 & 7 | 600 | Jun. 1998 |
| HYD1 | Tarbela | 17 | 432 | Jun. 1998 |
| V-GT | Gas Turbine | 7 | 100 | Jun. 1998 |
| NUKE | Nuclear | 2 | 900 | Jun. 1999 |
| HYD1 | Kalabagh | 8, 9 & 10 | 900 | Jun. 1999 |
| OIL2 | Jamshoro Oil | 5 & 6 | 600 | Jun. 2000 |
| OIL3 | Future Oil | 1 | 400 | Jun. 2000 |
| V-GT | Gas Turbine | 8 & 9 | 200 | Jun. 2000 |
| HYD1 | Kalabagh | 11 & 12 | 600 | Jun. 2000 |

CASE 31
LEAST COST GENERATION EXPANSION PROGRAM
FOR THE LAKHRA UNDERGROUND MINE ALTERNATIVE
(Continued)

| WASP Name | Description | Unit No. | Capacity (MW) | Commissioning Date |
|---|---|---|---|---|
| NUKE | Nuclear | 3 | 900 | Jun. 2001 |
| HYD1 | Basha | 1 & 2 | 1,708 | Jun. 2001 |
| HYD1 | Basha | 3 & 4 | 1,708 | Jun. 2002 |
| NUKE | Nuclear | 4 | 900 | Jun. 2003 |
| HYD1 | Dasu | 1 | 932 | Jun. 2003 |
| DMCL | Domestic Coal | 1 & 2 | 500 | Jun. 2004 |
| NUKE | Nuclear | 5 | 900 | Jun. 2005 |
| HYD1 | Dasu | 2 | 932 | Jun. 2005 |
| OIL3 | Future Oil | 2, 3, 4 & 5 | 1,600 | Jun. 2006 |
| DMCL | Domestic Coal | 3 | 250 | Jun. 2006 |
| NUKE | Nuclear | 6 | 900 | Jun. 2007 |
| HYD1 | Dasu | 3 | 932 | Jun. 2007 |
| HYD2 | Bunji | 1 | 645 | Jun. 2007 |
| OIL3 | Future Oil | 6, 7, 8 & 9 | 1,600 | Jun. 2008 |
| NUKE | Nuclear | 7 | 900 | Jun. 2009 |
| HYD1 | Dasu | 4 | 932 | Jun. 2009 |
| HYD2 | Bunji | 2 | 645 | Jun. 2009 |
| OIL3 | Future Oil | 10, 11 & 12 | 1,200 | Jun. 2010 |
| V-GT | Gas Turbine | 10 & 11 | 200 | Jun. 2010 |
| HYD1 | Thakot | 1 | 1,207 | Jun. 2010 |

Assumptions

1. Lakhra Power Plant includes one 250 MW generating unit.
2. Lakhra supplied with underground mined coal at $22.50/MT (reduced).
3. Cost of oil is $16/barrel in 1991, escalating at 3 percent per year.
4. Discount rate is 10 percent.
5. Shadow pricing on foreign component of cost is 30 percent.
6. GCII cost estimates for Lakhra Power Plant reduced by 20 percent, first unit capital costs for imported coal units reduced by 20 percent, additional incremental imported coal units reduced by 10 percent.

# CASE 32
## LEAST COST GENERATION EXPANSION PROGRAM FOR THE LAKHRA SURFACE MINE ALTERNATIVE

| WASP Name | Description | Unit No. | Capacity (MW) | Commissioning Date |
|---|---|---|---|---|
| V-GT | Gas Turbines | 1 & 2 | 200 | Jun. 1989 |
| OIL1 | Pipri (KESC) | 3, 4 & 5 | 630 | Jun. 1990 |
| V-GT | Gas Turbines | 3, 4 & 5 | 300 | Jun. 1990 |
| FDCC | Faisalabad Comb. Cyc. | 9 | 40 | Jun. 1991 |
| KOCC | Kotri Comb. Cyc. | 7 | 40 | Jun. 1991 |
| HYD2 | Low Head Hydel | Chashma | 200 | Jun. 1991 |
| HYD2 | Low Head Hydel | Taunsa | 110 | Jun. 1992 |
| OIL2 | Jamshoro Oil | 4 & 5 | 600 | Jun. 1993 |
| HYD2 | Low Head Hydel | Jinnah | 110 | Jun. 1993 |
| IMCL | Imported Coal | 1 & 2 | 920 | Jun. 1994 |
| IMCL | Imported Coal | 3 | 460 | Jun. 1995 |
| HYD1 | Tarbela | 15 & 16 | 864 | Jun. 1995 |
| HYD1 | Kalabagh | 1, 2 & 3 | 900 | Jun. 1995 |
| IMCL | Imported Coal | 4 & 5 | 920 | Jun. 1996 |
| HYD1 | Kalabagh | 4 | 300 | Jun. 1996 |
| NUKE | Nuclear | 1 | 900 | Jun. 1997 |
| HYD1 | Kalabagh | 5, 6 & 7 | 900 | Jun. 1997 |
| HYD1 | Tarbela | 17 | 432 | Jun. 1997 |
| IMCL | Imported Coal | 6, 7 & 8 | 1,380 | Jun. 1998 |
| HYD1 | Kalabagh | 8 | 300 | Jun. 1998 |
| NUKE | Nuclear | 2 | 900 | Jun. 1999 |
| HYD1 | Kalabagh | 9, 10 & 11 | 900 | Jun. 1999 |
| OIL2 | Jamshoro Oil | 6 | 300 | Jun. 2000 |
| OIL3 | Future Oil | 1 & 2 | 800 | Jun. 2000 |
| V-GT | Gas Turbine | 6 & 7 | 200 | Jun. 2000 |
| HYD1 | Kalabagh | 12 | 300 | Jun. 2000 |
| NUKE | Nuclear | 3 | 900 | Jun. 2001 |
| HYD1 | Basha | 1 & 2 | 1,708 | Jun. 2001 |
| HYD1 | Basha | 3 & 4 | 1,708 | Jun. 2002 |

## CASE 32
## LEAST COST GENERATION EXPANSION PROGRAM FOR THE LAKHRA SURFACE MINE ALTERNATIVE
## (Continued)

| WASP Name | Description | Unit No. | Capacity (MW) | Commissioning Date |
|---|---|---|---|---|
| NUKE | Nuclear | 4 | 900 | Jun. 2003 |
| HYD1 | Dasu | 1 | 932 | Jun. 2003 |
| LAKS | Lakhra | 1 & 2 | 550 | Jun. 2004 |
| NUKE | Nuclear | 5 | 900 | Jun. 2005 |
| HYD1 | Dasu | 2 | 932 | Jun. 2005 |
| OIL3 | Future Oil | 3 & 4 | 800 | Jun. 2006 |
| DMCL | Domestic Coal | 1, 2 & 3 | 750 | Jun. 2006 |
| V-GT | Gas Turbine | 7, 8 & 9 | 300 | Jun. 2006 |
| NUKE | Nuclear | 6 | 900 | Jun. 2007 |
| HYD1 | Dasu | 3 | 932 | Jun. 2007 |
| HYD2 | Bunji | 1 | 645 | Jun. 2007 |
| OIL3 | Future Oil | 5, 6, 7 & 8 | 1,600 | Jun. 2008 |
| NUKE | Nuclear | 7 | 900 | Jun. 2009 |
| HYD1 | Dasu | 4 | 932 | Jun. 2009 |
| HYD2 | Bunji | 2 | 645 | Jun. 2009 |
| OIL3 | Future Oil | 9, 10 & 11 | 1,200 | Jun. 2010 |
| V-GT | Gas Turbine | 10 & 11 | 200 | Jun. 2010 |
| HYD1 | Thakot | 1 | 1,207 | Jun. 2010 |

Assumptions

1. Lakhra Power Plant includes two 275 MW generating units.
2. Lakhra supplied with surface mined coal at $33/MT.
3. Cost of oil is $16/barrel in 1991, escalating at 3 percent per year.
4. Discount rate is 10 percent.
5. Shadow pricing on foreign component of cost is 30 percent.
6. GCII cost estimates for Lakhra and Imported Coal Power Plants reduced 20 percent for first unit at a power plant and reduced 10 percent for additional incremental units.

# CASE 3A
## SENSITIVITY CASE - LAKHRA SURFACE
## $24/BARREL OIL IN 1991

| WASP Name | Description | Unit No. | Capacity (MW) | Commissioning Date |
|---|---|---|---|---|
| V-GT | Gas Turbines | 1 | 100 | Jun. 1989 |
| OIL1 | Pipri (KESC) | 3, 4 & 5 | 630 | Jun. 1990 |
| V-GT | Gas Turbines | 2, 3, 4 & 5 | 400 | Jun. 1990 |
| FDCC | Faisalabad Comb. Cyc. | 9 | 40 | Jun. 1991 |
| KOCC | Kotri Comb. Cyc. | 7 | 40 | Jun. 1991 |
| HYD2 | Low Head Hydel | Chashma | 200 | Jun. 1991 |
| HYD2 | Low Head Hydel | Taunsa | 110 | Jun. 1992 |
| LAKS | Lakhra | 1 & 2 | 550 | Jun. 1993 |
| HYD2 | Low Head Hydel | Jinnah | 110 | Jun. 1993 |
| IMCL | Imported Coal | 1 & 2 | 920 | Jun. 1994 |
| V-GT | Gas Turbine | 6 | 100 | Jun. 1994 |
| IMCL | Imported Coal | 3 & 4 | 920 | Jun. 1995 |
| HYD1 | Tarbela | 15 & 16 | 864 | Jun. 1995 |
| HYD1 | Kalabagh | 1, 2 & 3 | 900 | Jun. 1995 |
| IMCL | Imported Coal | 5 & 6 | 920 | Jun. 1996 |
| HYD1 | Kalabagh | 4 & 5 | 600 | Jun. 1996 |
| NUKE | Nuclear | 1 | 900 | Jun. 1997 |
| IMCL | Imported Coal | 7 & 8 | 920 | Jun. 1997 |
| HYD1 | Kalabagh | 6 & 7 | 600 | Jun. 1997 |
| HYD1 | Tarbela | 17 | 432 | Jun. 1997 |
| HYD1 | Kalabagh | 8 | 300 | Jun. 1998 |
| NUKE | Nuclear | 2 | 900 | Jun. 1999 |
| DMCL | Domestic Coal | 1 | 250 | Jun. 1999 |
| HYD1 | Kalabagh | 9 | 300 | Jun. 1999 |
| OIL2 | Jamshoro Oil | 4 | 300 | Jun. 2000 |
| DMCL | Domestic Coal | 2 & 3 | 500 | Jun. 2000 |
| V-GT | Gas Turbine | 7 & 8 | 200 | Jun. 2000 |
| HYD1 | Kalabagh | 10, 11 & 12 | 900 | Jun. 2000 |

CASE 3A
SENSITIVITY CASE - LAKHRA SURFACE
$24/BARREL OIL IN 1991
(Continued)

| WASP Name | Description | Unit No. | Capacity (MW) | Commissioning Date |
|---|---|---|---|---|
| NUKE | Nuclear | 3 | 900 | Jun. 2001 |
| HYD1 | Basha | 1 & 2 | 1,708 | Jun. 2001 |
| HYD1 | Basha | 3 & 4 | 1,708 | Jun. 2002 |
| NUKE | Nuclear | 4 | 900 | Jun. 2003 |
| HYD1 | Dasu | 1 | 932 | Jun. 2003 |
| OIL2 | Jamshoro Oil | 5 & 6 | 600 | Jun. 2004 |
| NUKE | Nuclear | 5 | 900 | Jun. 2005 |
| HYD1 | Dasu | 2 | 932 | Jun. 2005 |
| OIL3 | Future Oil | 1, 2, 3 & 4 | 1,600 | Jun. 2006 |
| V-GT | Gas Turbine | 9 & 10 | 200 | Jun. 2006 |
| NUKE | Nuclear | 6 | 900 | Jun. 2007 |
| HYD1 | Dasu | 3 | 932 | Jun. 2007 |
| HYD2 | Bunji | 1 | 645 | Jun. 2007 |
| OIL3 | Future Oil | 5, 6, 7 & 8 | 1,600 | Jun. 2008 |
| NUKE | Nuclear | 7 | 900 | Jun. 2009 |
| HYD1 | Dasu | 4 | 932 | Jun. 2009 |
| HYD2 | Bunji | 2 | 645 | Jun. 2009 |
| OIL3 | Future Oil | 9, 10 & 11 | 1,200 | Jun. 2010 |
| V-GT | Gas Turbine | 11 & 12 | 200 | Jun. 2010 |
| HYD1 | Thakot | 1 | 1,207 | Jun. 2010 |

Assumptions

1. Lakhra Power Plant includes two 275 MW generating units.
2. Lakhra supplied with surface mined coal at $33/MT.
3. Cost of oil is $24/barrel in 1991, escalating at 3 percent per year.
4. Discount rate is 10 percent.
5. Shadow pricing on foreign component of cost is 30 percent.
6. GCII cost estimates for Lakhra and Imported Coal Power Plants reduced 20 percent for first unit at a power plant and reduced 10 percent for additional incremental units.

# CASE 31
## 1 x 250 MW LAKHRA POWER PLANT - UNDERGROUND MINING
## SYSTEM CAPACITY AND GENERATION MIX

| Year | Total Capacity (MW) | Percentage of Total Capacity | | | | | | Energy Not Served (GWH) |
|---|---|---|---|---|---|---|---|---|
| | | DMCL | IMCL | O/GS | HSDP | NUCL | HYDL | |
| 1987 | 6,183 | 0 | 0 | 38 | 14 | 1 | 47 | 45 |
| 1988 | 6,383 | 0 | 0 | 40 | 13 | 1 | 45 | 139 |
| 1989 | 6,922 | 0 | 0 | 40 | 17 | 1 | 42 | 178 |
| 1990 | 9,037 | 0 | 0 | 43 | 22 | 1 | 34 | 3 |
| 1991 | 11,109 | 0 | 0 | 37 | 17 | 1 | 45 | 2 |
| 1992 | 11,726 | 0 | 0 | 39 | 16 | 1 | 44 | 2 |
| 1993 | 12,386 | 2 | 0 | 40 | 15 | 1 | 42 | 5 |
| 1994 | 13,406 | 2 | 7 | 37 | 15 | 1 | 39 | 6 |
| 1995 | 15,220 | 2 | 9 | 31 | 13 | 1 | 44 | 8 |
| 1996 | 16,706 | 2 | 14 | 29 | 12 | 1 | 43 | 8 |
| 1997 | 18,128 | 1 | 15 | 25 | 1 | 5 | 48 | 13 |
| 1998 | 20,007 | 1 | 18 | 22 | 10 | 5 | 43 | 15 |
| 1999 | 21,755 | 1 | 17 | 20 | 9 | 9 | 44 | 18 |
| 2000 | 23,468 | 1 | 16 | 23 | 9 | 8 | 43 | 17 |
| 2001 | 25,951 | 1 | 14 | 20 | 8 | 11 | 46 | 13 |
| 2002 | 27,659 | 1 | 13 | 19 | 8 | 10 | 49 | 29 |
| 2003 | 29,491 | 1 | 12 | 18 | 7 | 12 | 49 | 27 |
| 2004 | 29,991 | 3 | 12 | 17 | 7 | 12 | 48 | 68 |
| 2005 | 31,747 | 2 | 12 | 16 | 7 | 14 | 49 | 68 |
| 2006 | 33,597 | 3 | 11 | 20 | 6 | 14 | 46 | 71 |
| 2007 | 36,074 | 3 | 10 | 19 | 6 | 15 | 47 | 46 |
| 2008 | 37,674 | 3 | 10 | 22 | 6 | 15 | 45 | 70 |
| 2009 | 40,151 | 2 | 9 | 21 | 5 | 16 | 47 | 58 |
| 2010 | 42,344 | 2 | 9 | 22 | 5 | 15 | 47 | 66 |

NOTES:

DMCL - Domestic Coal
IMCL - Imported Coal
O/GS - Oil or Gas
HSDP - High Speed Diesel
NUCL - Nuclear
HYDL - Hydel

# CASE 32
## 2 x 250 MW LAKHRA POWER PLANT - SURFACE MINING
## SYSTEM CAPACITY AND GENERATION MIX

| Year | Total Capacity (MW) | Percentage of Total Capacity | | | | | | Energy Not Served (GWH) |
|---|---|---|---|---|---|---|---|---|
| | | DMCL | IMCL | O/GS | HSDP | NUCL | HYDL | |
| 1987 | 6,183 | 0 | 0 | 38 | 14 | 1 | 47 | 45 |
| 1988 | 6,383 | 0 | 0 | 40 | 13 | 1 | 45 | 139 |
| 1989 | 6,822 | 0 | 0 | 41 | 15 | 1 | 42 | 218 |
| 1990 | 9,037 | 0 | 0 | 43 | 22 | 1 | 34 | 3 |
| 1991 | 11,301 | 0 | 0 | 36 | 17 | 1 | 44 | 1 |
| 1992 | 11,726 | 0 | 0 | 39 | 16 | 1 | 44 | 3 |
| 1993 | 12,436 | 0 | 0 | 39 | 15 | 1 | 42 | 4 |
| 1994 | 13,356 | 0 | 7 | 37 | 15 | 1 | 39 | 6 |
| 1995 | 15,470 | 0 | 9 | 31 | 13 | 1 | 45 | 5 |
| 1996 | 16,656 | 0 | 14 | 29 | 12 | 1 | 44 | 8 |
| 1997 | 18,650 | 0 | 12 | 24 | 11 | 5 | 46 | 13 |
| 1998 | 20,157 | 0 | 18 | 22 | 10 | 5 | 44 | 14 |
| 1999 | 21,905 | 0 | 17 | 20 | 9 | 9 | 45 | 17 |
| 2000 | 23,418 | 0 | 16 | 25 | 8 | 8 | 43 | 17 |
| 2001 | 25,901 | 0 | 14 | 22 | 7 | 11 | 46 | 13 |
| 2002 | 27,609 | 0 | 13 | 20 | 7 | 10 | 49 | 30 |
| 2003 | 29,441 | 0 | 12 | 19 | 6 | 13 | 49 | 27 |
| 2004 | 29,991 | 2 | 12 | 20 | 6 | 12 | 48 | 67 |
| 2005 | 31,747 | 2 | 12 | 19 | 6 | 14 | 49 | 67 |
| 2006 | 33,597 | 4 | 11 | 20 | 6 | 14 | 46 | 72 |
| 2007 | 36,074 | 4 | 10 | 19 | 6 | 15 | 47 | 47 |
| 2008 | 37,674 | 3 | 10 | 22 | 6 | 15 | 45 | 71 |
| 2009 | 40,151 | 3 | 9 | 21 | 5 | 16 | 47 | 60 |
| 2010 | 42,344 | 3 | 9 | 22 | 5 | 15 | 47 | 67 |

NOTES:

DMCL - Domestic Coal
IMCL - Imported Coal
O/GS - Oil or Gas
HSDP - High Speed Diesel
NUCL - Nuclear
HYDL - Hydel

# CASE 3A
## 2 x 250 MW LAKHRA POWER PLANT - SURFACE MINING
## $24 PER BARREL OIL IN 1991
## SYSTEM CAPACITY AND GENERATION MIX

| Year | Total Capacity (MW) | Percentage of Total Capacity | | | | | | Energy Not Served (GWH) |
|---|---|---|---|---|---|---|---|---|
| | | DMCL | IMCL | O/GS | HSDP | NUCL | HYDL | |
| 1987 | 6,183 | 0 | 0 | 38 | 14 | 1 | 47 | 45 |
| 1988 | 6,383 | 0 | 0 | 40 | 13 | 1 | 45 | 139 |
| 1989 | 6,722 | 0 | 0 | 42 | 14 | 1 | 43 | 265 |
| 1990 | 9,037 | 0 | 0 | 43 | 22 | 1 | 34 | 3 |
| 1991 | 11,225 | 0 | 0 | 37 | 17 | 1 | 46 | 1 |
| 1992 | 11,726 | 0 | 0 | 39 | 16 | 1 | 44 | 3 |
| 1993 | 12,386 | 5 | 0 | 37 | 15 | 1 | 42 | 6 |
| 1994 | 13,406 | 4 | 7 | 34 | 15 | 1 | 39 | 6 |
| 1995 | 15,980 | 4 | 12 | 28 | 13 | 1 | 44 | 2 |
| 1996 | 17,466 | 3 | 16 | 26 | 11 | 1 | 44 | 3 |
| 1997 | 20,080 | 3 | 18 | 21 | 10 | 5 | 43 | 3 |
| 1998 | 20,207 | 3 | 18 | 20 | 10 | 5 | 44 | 14 |
| 1999 | 21,605 | 4 | 17 | 19 | 9 | 9 | 43 | 19 |
| 2000 | 23,418 | 6 | 16 | 19 | 9 | 8 | 43 | 21 |
| 2001 | 25,901 | 5 | 14 | 16 | 8 | 11 | 46 | 15 |
| 2002 | 27,609 | 5 | 13 | 15 | 8 | 10 | 49 | 33 |
| 2003 | 29,441 | 4 | 12 | 14 | 7 | 12 | 49 | 30 |
| 2004 | 30,041 | 4 | 12 | 16 | 7 | 12 | 48 | 68 |
| 2005 | 31,797 | 4 | 12 | 15 | 6 | 14 | 48 | 67 |
| 2006 | 33,597 | 4 | 11 | 19 | 7 | 14 | 46 | 72 |
| 2007 | 36,074 | 4 | 10 | 18 | 6 | 15 | 47 | 47 |
| 2008 | 37,574 | 3 | 10 | 21 | 6 | 15 | 45 | 71 |
| 2009 | 40,151 | 3 | 9 | 20 | 5 | 16 | 46 | 60 |
| 2010 | 42,344 | 3 | 9 | 21 | 6 | 15 | 47 | 67 |

NOTES:

DMCL - Domestic Coal
IMCL - Imported Coal
O/GS - Oil or Gas
HSDP - High Speed Diesel
NUCL - Nuclear
HYDL - Hydel

## COAL UTILIZATION
## (THOUSANDS OF METRIC TONS)

| | Underground with $16/Bar Oil | | | | Surface with $24/Bar Oil | | | |
|---|---|---|---|---|---|---|---|---|
| Year | Total | QTSU | LAKU | DMCL | Total | QTSU | LAKS | DMCL |
| 1987 | 4 | 4 | 0 | 0 | 23 | 23 | 0 | 0 |
| 1988 | 10 | 10 | 0 | 0 | 39 | 39 | 0 | 0 |
| 1989 | 11 | 11 | 0 | 0 | 53 | 53 | 0 | 0 |
| 1990 | 6 | 6 | 0 | 0 | 29 | 29 | 0 | 0 |
| 1991 | 2 | 2 | 0 | 0 | 8 | 8 | 0 | 0 |
| 1992 | 2 | 2 | 0 | 0 | 105 | 105 | 0 | 0 |
| 1993 | 1,423 | 2 | 1,421 | 0 | 3,202 | 105 | 3,097 | 0 |
| 1994 | 1,417 | 3 | 1,414 | 0 | 3,184 | 104 | 3,080 | 0 |
| 1995 | 1,366 | 2 | 1,364 | 0 | 2,914 | 94 | 2,820 | 0 |
| 1996 | 1,310 | 2 | 1,308 | 0 | 2,726 | 85 | 2,641 | 0 |
| 1997 | 1,429 | 2 | 1,472 | 0 | 2,397 | 61 | 2,336 | 0 |
| 1998 | 1,428 | 2 | 1,426 | 0 | 2,687 | 76 | 2,611 | 0 |
| 1999 | 1,416 | 1 | 1,415 | 0 | 3,803 | 60 | 2,139 | 1,604 |
| 2000 | 1,425 | 0 | 1,425 | 0 | 5,349 | 0 | 2,599 | 3,750 |
| 2001 | 1,383 | 0 | 1,383 | 0 | 6,884 | 0 | 2,354 | 3,530 |
| 2002 | 1,374 | 0 | 1,374 | 0 | 6,022 | 0 | 2,435 | 3,587 |
| 2003 | 1,353 | 0 | 1,353 | 0 | 5,839 | 0 | 2,376 | 3,463 |
| 2004 | 3,759 | 0 | 1,387 | 2,372 | 6,299 | 0 | 2,600 | 3,699 |
| 2005 | 3,720 | 0 | 1,407 | 2,313 | 6,168 | 0 | 2,544 | 3,624 |
| 2006 | 5,122 | 0 | 1,430 | 3,692 | 6,558 | 0 | 2,725 | 3,833 |
| 2007 | 5,061 | 0 | 1,408 | 3,653 | 6,306 | 0 | 2,613 | 3,693 |
| 2008 | 5,250 | 0 | 1,428 | 3,822 | 6,596 | 0 | 2,749 | 3,847 |
| 2009 | 5,162 | 0 | 1,414 | 3,748 | 6,466 | 0 | 2,690 | 3,776 |
| 2010 | 5,186 | 0 | 1,416 | 3,770 | 6,504 | 0 | 2,709 | 3,795 |

NOTES:

QTSU - Quetta Steam Units
LAKU - Lakhra Power Plant Fueled with Underground Mined Coal
LAKS - Lakhra Power Plant Fueled with Surface Mined Coal
DMCL - Future Domestic Coal Units

EXHIBIT 3.14

CAPACITY FACTORS

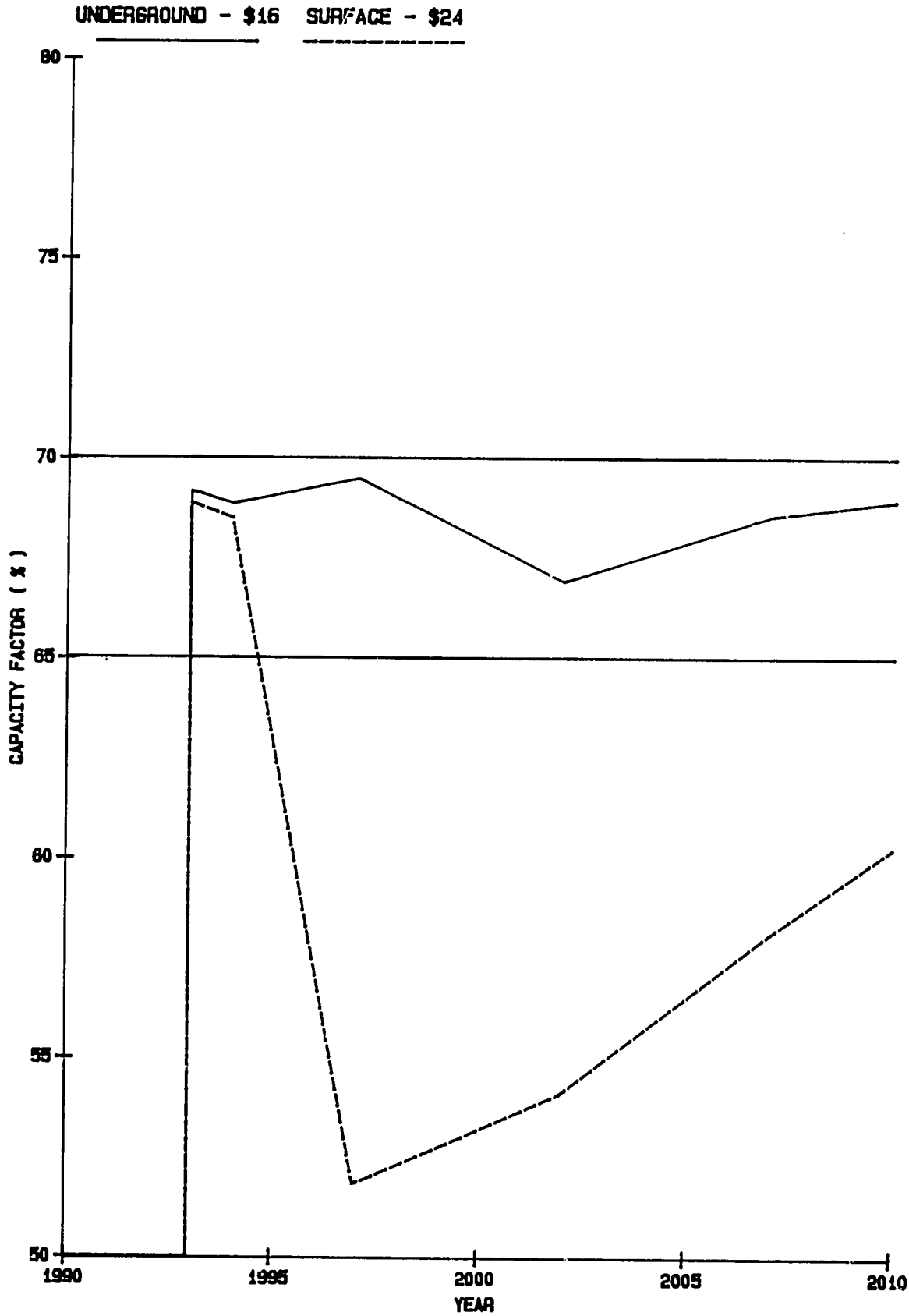




90

THIRD SERIES OF WASP COMPUTER STUDIES
COMPARISON OF ALTERNATIVE GENERATION EXPANSION PLANS
PRESENT WORTH ANALYSIS
(Thousands of U.S. Dollars)

| Rank | Case No. | Cost of Oil | PW Discount Rate | Capital Costs (per G/C) | Lakhra Power Plant | Underground (U) Surface (S) | Inservice Year | Cum. PW Through 2010 |
|---|---|---|---|---|---|---|---|---|
| 1 | 33 | $16/B | 15% | Reduced | 1 x 250 | U | 1995 | 11,737,047 |
| 2 | 31 | $16/B | 10% | Reduced | 1 x 250 | U | 1993 | 17,823,040 |
| 3 | 32 | $16/B | 10% | Reduced | 2 x 275 | S | 2004 | 17,859,984 |
| 4 | 3L | $16/B | 10% | Reduced | No Lakhra | - | - | 17,883,920 |
| 5 | 30 | $16/B | 10% | Reduced | 2 x 275 | S | Forced | 17,922,208 |
| 6 | 37 | $16/B | 10% | Full | 1 x 250 | U | 2000 | 18,121,104 |
| 7 | 42* | $24/B | 10% | Reduced | 2 x 275 | S | 1993 | 20,121,072 |
| 8 | 3A | $24/B | 10% | Reduced | 2 x 275 | S | 1993 | 20,599,968 |
| 9 | 39 | $24/B | 10% | Reduced | 1 x 250 | U | 1992 | 20,790,880 |
| 10 | 3N | $24/B | 10% | Reduced | No Lakhra | - | - | 20,856,416 |

*Special case with 12 imported coal units.

EXHIBIT 3.15

WASP Tbl/D14

# TYPICAL TRANSMISSION SYSTEM CHARACTERISTICS

## Typical Transmission Circuit Characteristics

| kV | Conductor | Imped. (a) & Chg Per 100 km r% | x% | MVAR | Approx. Rating AMP | MVA |
|---|---|---|---|---|---|---|
| 500 | 3-927 AAAC/6201 (Greeley) | 0.11 | 1.14 | 100 | 2,700 | 2,300 |
| 220 | 1-954 ACSR (Rail) | 1.42 | 8.11 | 14 | 1,000 | 380 |
| 132 | 1-336 ACSR (Lynx) | 11.7 | 24.2 | 5 | 500 | 110 |

## Typical Transformer Characteristics

| | | |
|---|---|---|
| Capability | 270/337.5/450 | MVA |
| Operating Voltage | 500/220/22 | kV |
| BIL | 1550/950/125 | H/L/T |
| Impedance at 270 MVA | 0.12+j 7.5% | H-L |
| | 0.52+j 17.4% | H-T |
| | 0.56+j 8.3% | L-T |

## Typical Circuit Breaker Characteristics

| kV | Type | Rating Amps | Interrupting kA | Cycles |
|---|---|---|---|---|
| 500 | SF6 | 3,000 | 40 | 2.0 |
| 220 | SF6 | 2,000 | 40 | 2.5 |
| 132 | - | 1,600 | 31.5 | 3.0 |

(a) Impedance is percent on 100 MVA base.

EXHIBIT 3.17

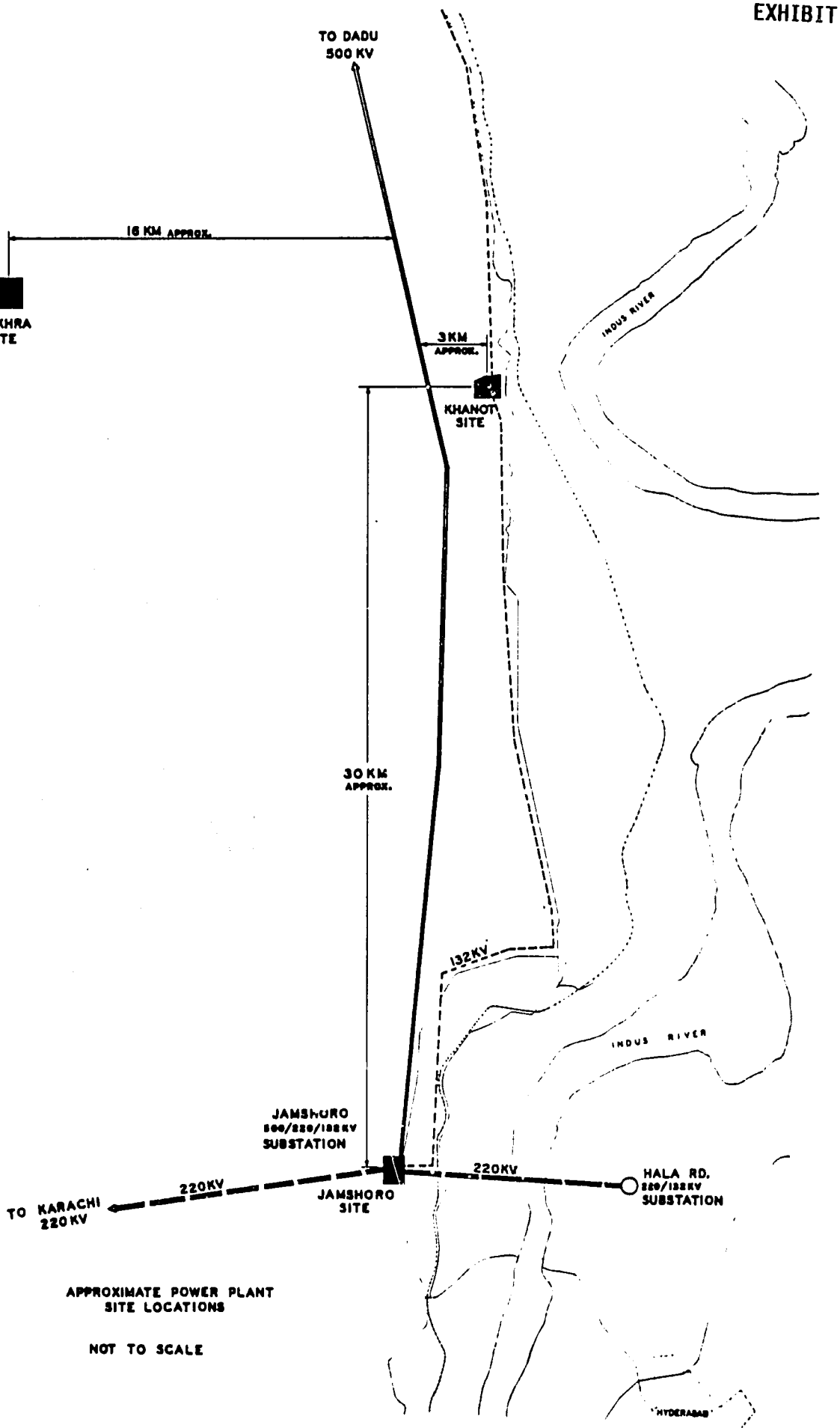


APPROXIMATE POWER PLANT
SITE LOCATIONS

NOT TO SCALE

220 AND 500 KV ALTERNATIVE
TRANSMISSION PLANS FOR
JAMSHORO, LAKHRA, AND KHANOT
POWER PLANT SITES

EXHIBIT 3.18

UNIT 1 UNIT 2

J.1 JAMSHORO 220 KV PLAN

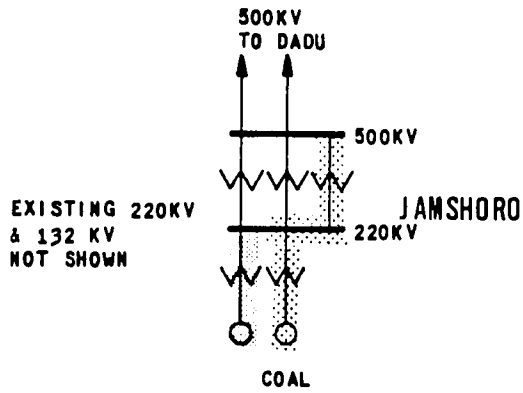


J.2 JAMSHORO 500 KV PLAN

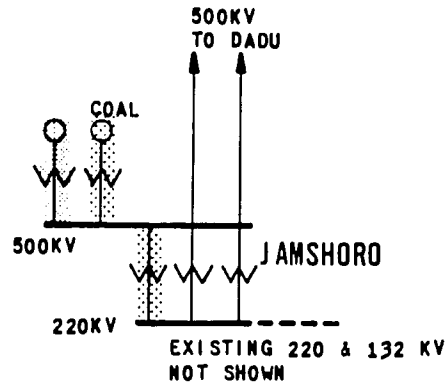


L.1 LAKHRA 220 KV PLAN

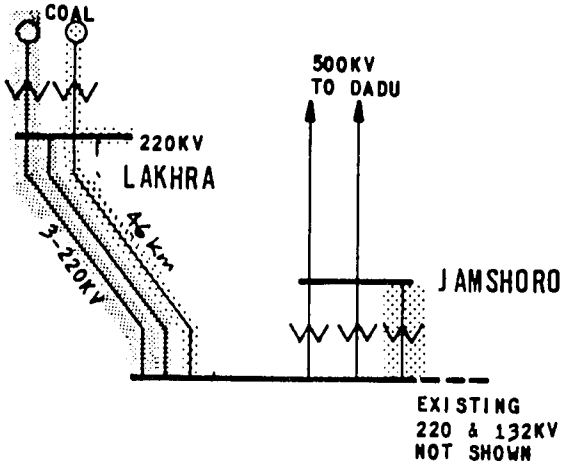


L.2 LAKHRA 500 KV PLAN

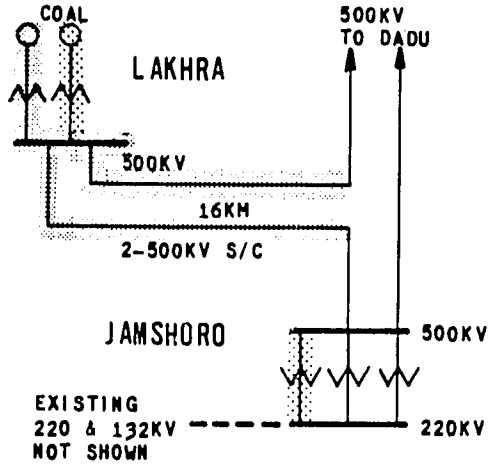


K.1 KHANOT 220 KV PLAN

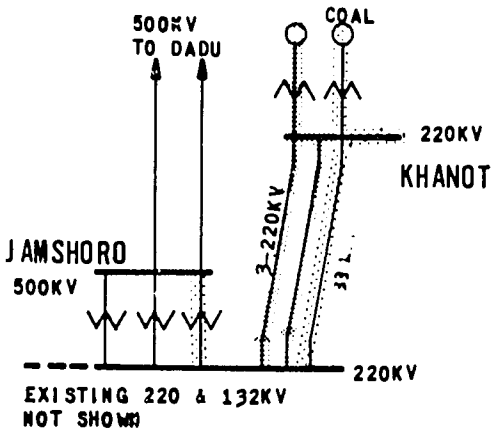


K.2 KHANOT 500 KV PLAN

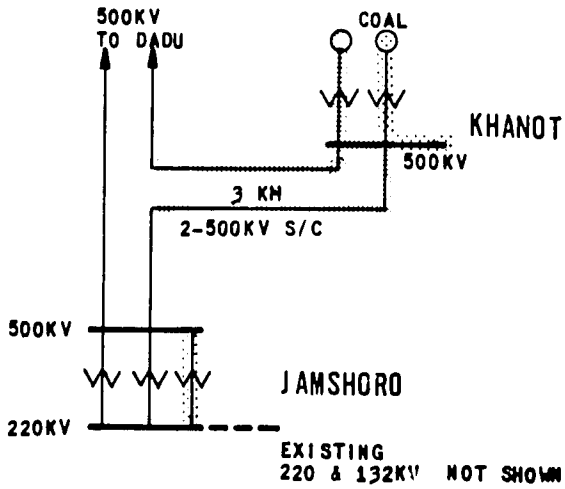




4d

JAMSHORO 500/220 KV SUBSTATION

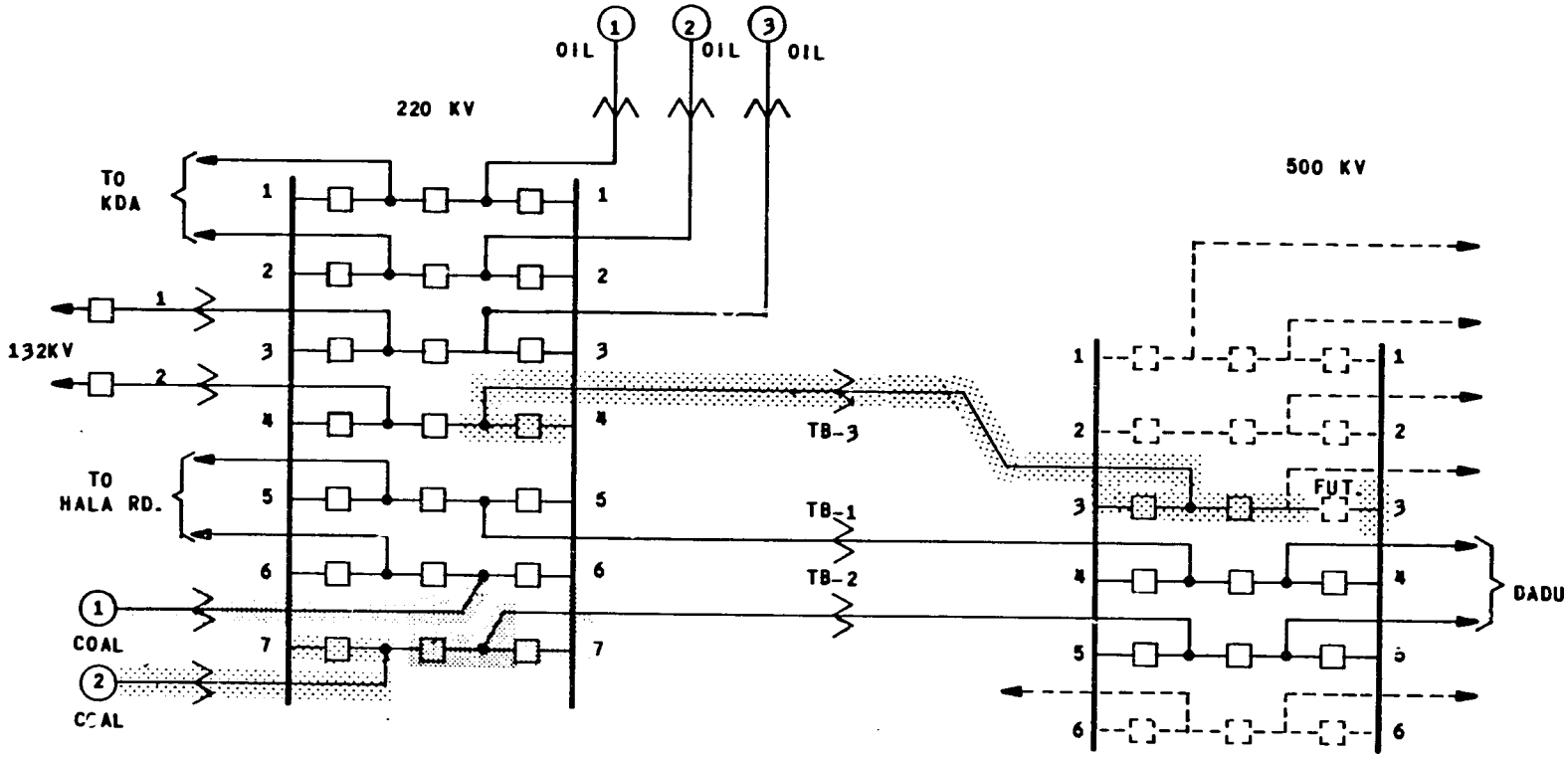


MASTER PLAN FACILITIES ASSUMED IN SERVICE

MASTER PLAN FACILITIES - FUTURE

FACILITIES REQUIRED WITH LAKHRA PROJECT UNIT 1

FACILITIES REQUIRED WITH LAKHRA PROJECT UNIT 2

LAKHRA POWER FEASIBILITY STUDY
JAMSHORO 550/220 KV SUBSTATION
PLAN J.1
UNITS ON JAMSHORO 220 KV

EXHIBIT 3.19

JAMSHORO 500/220 KV SUBSTATION

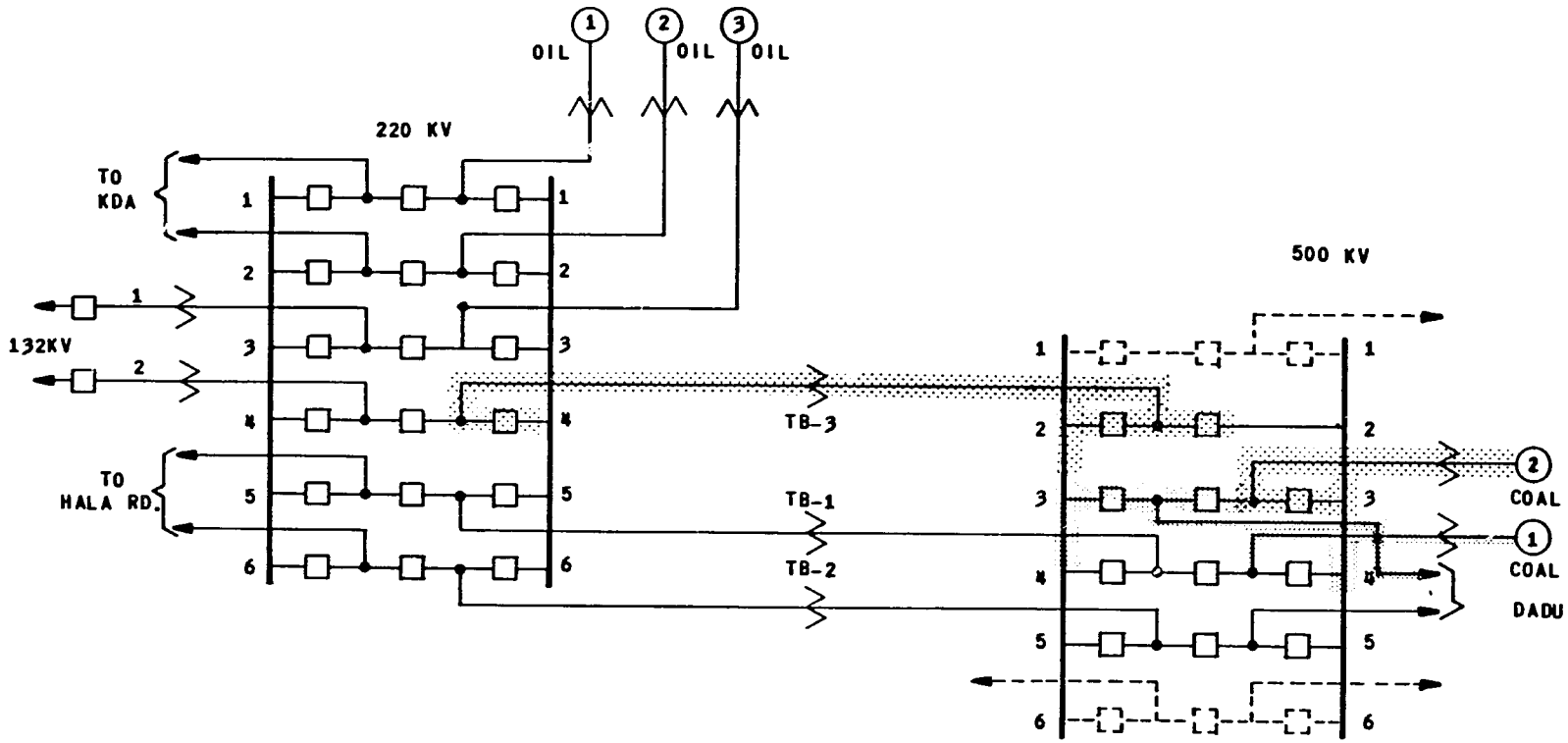


MASTER PLAN FACILITIES ASSUMED IN SERVICE

MASTER PLAN FACILITIES - FUTURE

FACILITIES REQUIRED WITH LAKHRA PROJECT UNIT 1

FACILITIES REQUIRED WITH LAKHRA PROJECT UNIT 2

LAKHRA POWER FEASIBILITY STUDY
JAMSHORO 550/220 KV SUBSTATION
PLAN J.2
UNITS ON JAMSHORO 500KV

EXHIBIT 3.20

LAKHRA OR KHANOT 220 KV SUBSTATION

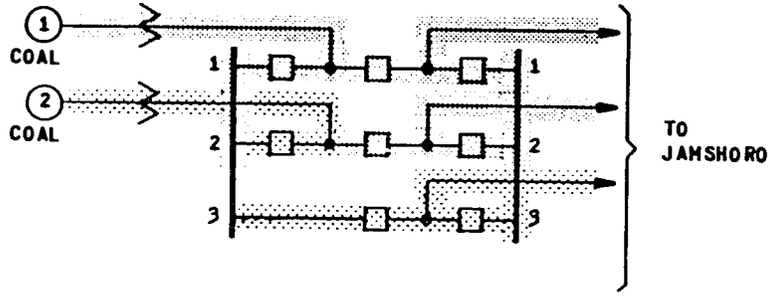


FACILITIES REQUIRED WITH LAKHRA PROJECT - UNIT 1
FACILITIES REQUIRED WITH LAKHRA PROJECT - UNIT 2

LAKHRA POWER FEASIBILITY STUDY
LAKHRA 220 KV SUBSTATION
PLAN L.1 OR K.1
COAL FIRED UNITS LOCATED AT
MINE(LAKHRA) OR AT KHANOT
SITE CONNECTED VIA 4-220 KV CKTS

EXHIBIT 3.21

JAMSHORO 500/220 KV SUBSTATION

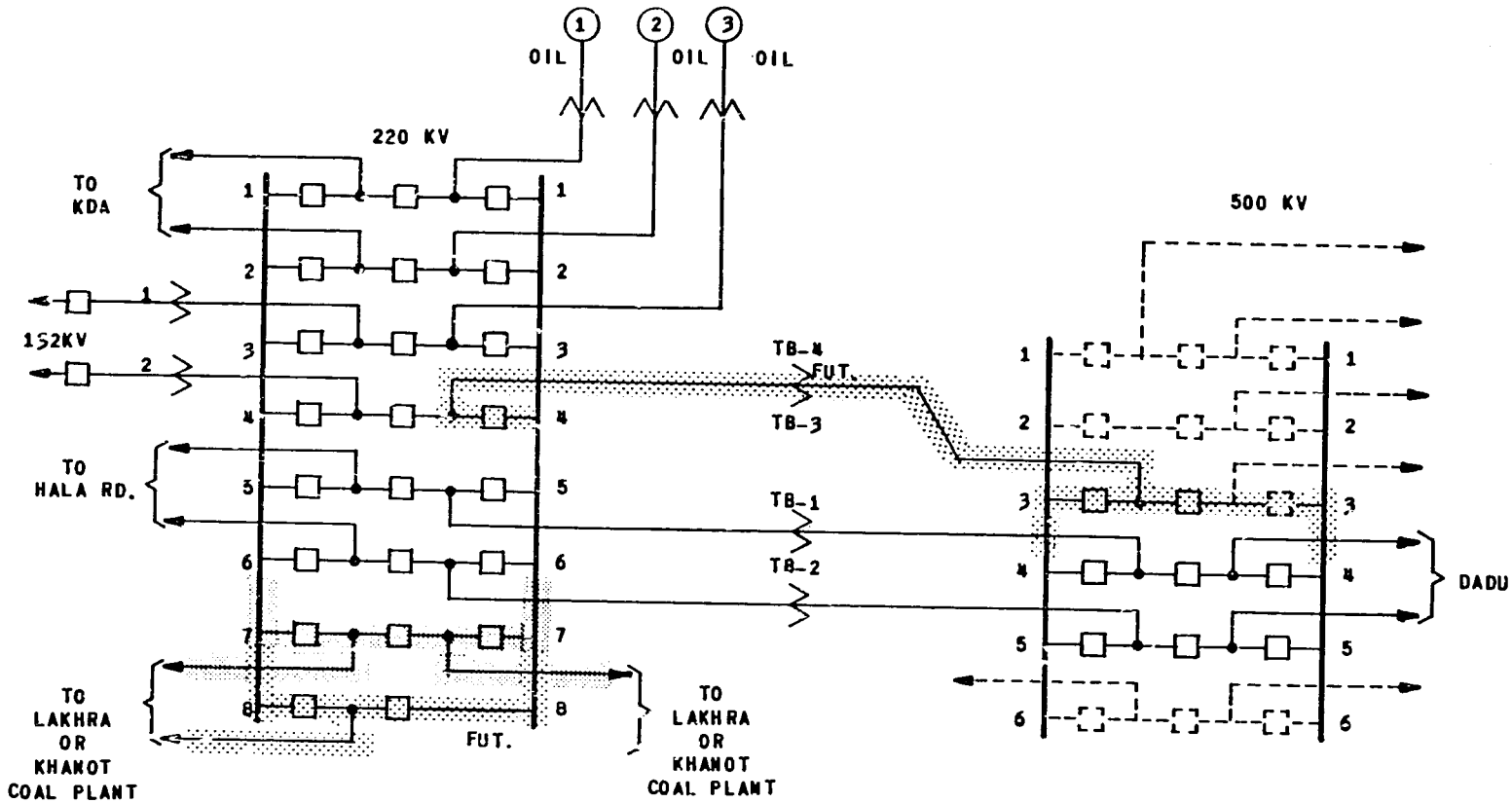


MASTER PLAN FACILITIES ASSUMED IN SERVICE

MASTER PLAN FACILITIES - FUTURE

FACILITIES REQUIRED WITH LAKHRA PROJECT UNIT 1

FACILITIES REQUIRED WITH LAKHRA PROJECT UNIT 2

LAKHRA POWER FEASIBILITY STUDY
JAMSHORO 550/220 KV SUBSTATION
PLAN L.1 OR K.1
COAL FIRED PLANT CONNECTED TO
JAMSHORO VIA 4-220 KV CKTS

EXHIBIT 3.22

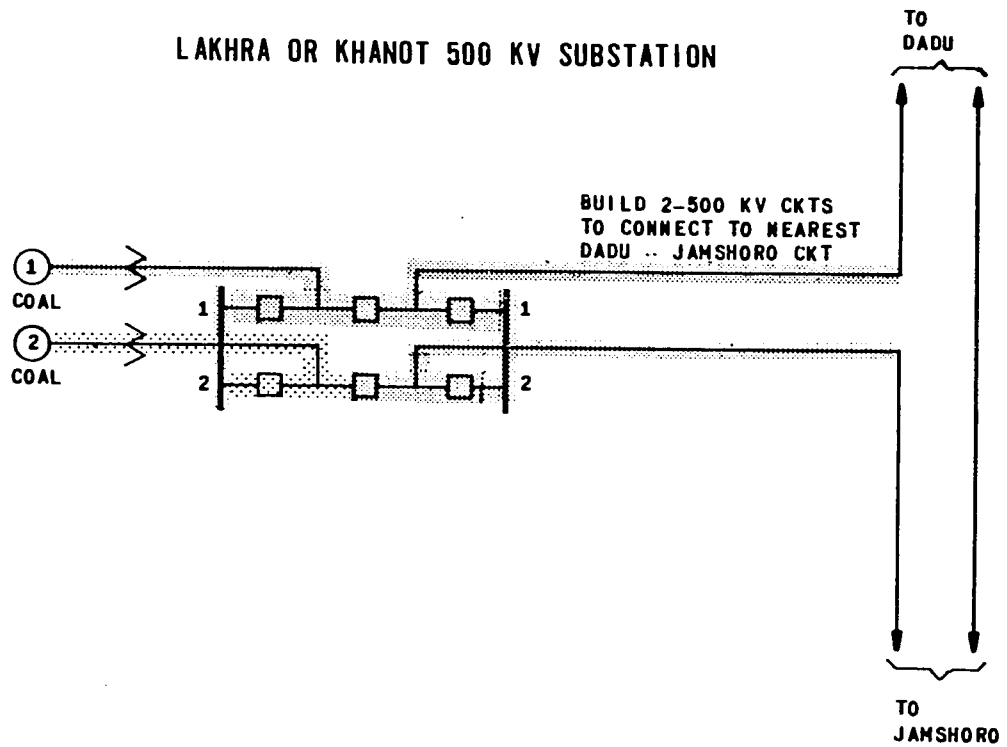


FACILITIES REQUIRED WITH LAKHRA PROJECT - UNIT 1

FACILITIES REQUIRED WITH LAKHRA PROJECT - UNIT 2

LAKHRA POWER FEASIBILITY STUDY

PLAN L.2 OR K.2
COAL FIRED UNITS LOCATED AT MINE(LAKHRA) OR AT KHANOT SITE CONNECTED VIA 500 KV

EXHIBIT 3.23



69

# JAMSHORO 500/220 KV SUBSTATION

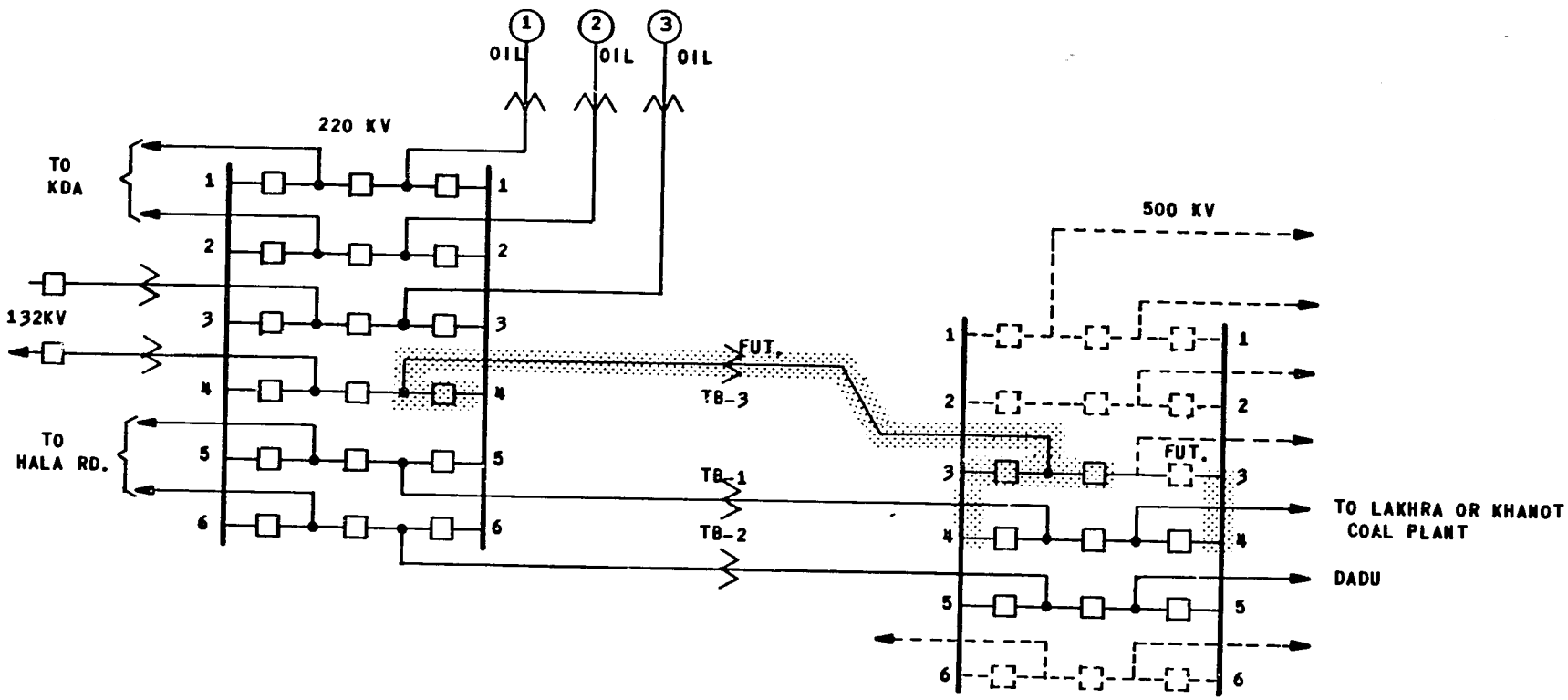


MASTER PLAN FACILITIES ASSUMED IN SERVICE

MASTER PLAN FACILITIES – FUTURE

FACILITIES REQUIRED WITH LAKHRA PROJECT
UNIT 2

LAKHRA POWER FEASIBILITY STUDY
JAMSHORO 550/220 KV SUBSTATION
PLAN L.2 OR K.2
COAL FIRED PLANT CONNECTED TO
EXISTING JAMSHORO - DADU 500 KV CKT

EXHIBIT 3.24

## THREE PHASE SHORT CIRCUIT CURRENTS

| | Jamshoro | | | | | Dadu |
|---|---|---|---|---|---|---|
| | 132 kV | 220 kV | 500 kV | Lakhra | Khanot | 500 kV |
| Breaker Interrupt Capab. - kA | 31.5 | 40 | 40 | 40 | 40 | 40 |
| 1993, 3Ø Short Circuit - kA | | | | | | |
| Plan J.1 (220 kV) | 21 | 26 | 8 | - | - | 7 |
| J.2 (500 kV) | 20 | 21 | 9 | - | - | 7 |
| L.1 (220 kV) | 21 | 24 | 8 | 19 | - | 7 |
| L.2 (500 kV) | 20 | 21 | 9 | 9 | - | 8 |
| K.1 (220 kV) | 21 | 25 | 8 | - | 21 | 7 |
| K.2 (500 kV) | 20 | 21 | 9 | - | 9 | 8 |



101

## COMPARISON OF LAKHRA TRANSMISSION PLANS
## TRANSMISSION LINE LENGTH AND
## MAJOR SUBSTATION EQUIPMENT

| | Plan | Transm. Line-km S/C 500 kV | Transm. Line-km D/C 220 kV | No. Circuit Bkrs 500 kV | No. Circuit Bkrs 220 kV | No. Auto Xfmrs 450 MVA 500/220 kV |
|---|---|---|---|---|---|---|
| J.1 | Jamshoro 220 kV | | | | | |
| | Unit 1 | 0 | 0 | 0 | 2 | 0 |
| | Unit 2 | 0 | 0 | 2 | 2 | 1 |
| | TOTAL | 0 | 0 | 2 | 4 | 1 |
| J.2 | Jamshoro 500 kV | | | | | |
| | Unit 1 | 0 | 0 | 2 | 0 | 0 |
| | Unit 2 | 0 | 0 | 3 | 1 | 1 |
| | TOTAL | 0 | 0 | 5 | 1 | 1 |
| L.1 | Lakhra 220 kV | | | | | |
| | Unit 1 | 0 | 46 | 0 | 8 | 0 |
| | Unit 2 | 0 | 46(a) | 2 | 6 | 1 |
| | TOTAL | 0 | 92 | 2 | 14 | 1 |
| L.2 | Lakhra 500 kV | | | | | |
| | Unit 1 | 32 | 0 | 5 | 0 | 0 |
| | Unit 2 | 0 | 0 | 3 | 1 | 1 |
| | TOTAL | 32 | 0 | 8 | 1 | 1 |
| K.1 | Khanot 220 kV | | | | | |
| | Unit 1 | 0 | 33 | 0 | 8 | 0 |
| | Unit 2 | 0 | 33(a) | 2 | 6 | 1 |
| | TOTAL | 0 | 66 | 2 | 14 | 1 |
| K.2 | Khanot 500 kV | | | | | |
| | Unit 1 | 6 | 0 | 5 | 0 | 0 |
| | Unit 2 | 0 | 0 | 3 | 1 | 1 |
| | TOTAL | 6 | 0 | 8 | 1 | 1 |

(a) Double circuit structures with one circuit strung.

## CAPITAL COSTS OF LAKHRA ALTERNATIVE TRANSMISSION PLANS
## JULY 1985 U.S. DOLLARS x 1,000

| | Plan | Transmission 500 kV | Transmission 220 kV | Substation Jamshoro | Substation Lakhra | Substation Khanot | Total |
|---|---|---|---|---|---|---|---|
| J.1 | Jamshoro 220 kV | | | | | | |
| | Unit 1 | - | - | 3,719 | - | - | 3,719 |
| | Unit 2 | - | - | 9,813 | - | - | 9,813 |
| | TOTAL | - | - | 13,532 | - | - | 13,532 |
| J.2 | Jamshoro 500 kV | | | | | | |
| | Unit 1 | - | - | 5,823 | - | - | 5,823 |
| | Unit 2 | - | - | 11,048 | - | - | 11,048 |
| | TOTAL | - | - | 16,871 | - | - | 16,871 |
| L.1 | Lakhra 220 kV | | | | | | |
| | Unit 1 | - | 5,540 | 1,396 | 5,060 | - | 11,996 |
| | Unit 2 | - | 3,721 | 7,278 | 4,176 | - | 15,175 |
| | TOTAL | - | 9,261 | 8,674 | 9,236 | - | 27,171 |
| L.2 | Lakhra 500 kV | | | | | | |
| | Unit 1 | 6,704 | - | 0 | 9,751 | - | 16,455 |
| | Unit 2 | 0 | - | 6,444 | 4,703 | - | 11,147 |
| | TOTAL | 6,704 | - | 6,444 | 14,454 | - | 27,602 |
| K.1 | Khanot 220 kV | | | | | | |
| | Unit 1 | - | 3,974 | 1,396 | - | 5,060 | 10,430 |
| | Unit 2 | - | 2,669 | 7,278 | - | 4,176 | 14,123 |
| | TOTAL | - | 6,643 | 8,674 | - | 9,236 | 24,553 |
| K.2 | Khanot 500 kV | | | | | | |
| | Unit 1 | 1,257 | - | 0 | - | 9,751 | 11,008 |
| | Unit 2 | 0 | - | 6,444 | - | 4,703 | 11,147 |
| | TOTAL | 1,257 | - | 6,444 | - | 14,454 | 22,155 |

## ECONOMIC COMPARISON OF LAKHRA TRANSMISSION ALTERNATIVES
## U.S. DOLLARS x 1,000

| | 220 kV | 500 kV |
|---|---|---|
| **2 x 250 MW Coal-Fired Units at Jamshoro** | | |
| Annual Fixed Charges on Capital Cost[a] | 1,435 | 1,790 |
| Annual Operating and Maintenance Cost[b] | 311 | 388 |
| Annual Cost of Losses[c] | - | - |
| TOTAL | 1,746 | 2,178 |
| **2 x 250 MW Coal-Fired Units at Lakhra** | | |
| Annual Fixed Charges on Capital Cost[a] | 2,882 | 2,928 |
| Annual Operating and Maintenance Cost[b] | 625 | 635 |
| Annual Cost of Losses[c] | 1,382 | 155 |
| TOTAL | 4,889 | 3,718 |
| **2 x 250 MW Coal-Fired Units at Khanot** | | |
| Annual Fixed Charges on Capital Cost[a] | 2,605 | 2,350 |
| Annual Operating and Maintenance Cost[b] | 565 | 510 |
| Annual Cost of Losses[c] | 991 | 111 |
| TOTAL | 4,161 | 2,971 |

(a) Fixed charge rate 0.10608 (10% for 30 years).

(b) 2.3% of capital cost - includes material and equipment spares, transmission and substation O&M, administrative, overhead and insurance.

(c) Incremental transmission losses from power plant to Jamshoro Substation. See Exhibit 3.29.

## COMPUTATION OF TRANSMISSION LOSSES FROM LAKHRA/KHANOT TO JAMSHORO

| | 500 kV | 220 kV |
|---|---|---|
| ASSUMPTIONS AND PARAMETERS | | |
| No. of Ckts. | 2 | 3 |
| Phase Conductor | 3-927 AAAC (Greeley) | 1-954 ACSR (Rail) |
| Resistance per Phase | 0.0265 Ω/Km | 0.0688 Ω/Km |
| Loading: | | |
| Peak Load (100% pf) | 500 MVA | 500 MVA |
| Load Per Circuit | 250 MVA/CKT | 167 MVA/CKT |
| Current at 100% Voltage | 289 amps/phase | 437 amps/phase |
| Power Cost | 5¢/kwh | 5¢/kwh |
| Plant Capacity Factor | 75% | 75% |
| Transmission Loss Factor | 58% | 58% |
| CALCULATED LOSSES | | |
| A. POWER PLANT AT LAKHRA | | |
| Transmission Length Lakhra-Jamshoro | 46 km | 46 km |
| Peak Losses on all Circuits | 611 kW | 5,439 kW |
| Annual Losses | 3,104 MWH | 27,634 MWH |
| Value of Losses | $155,200 | $1,381,700 |
| Incremental Cost of Losses | - | $1,226,500 |
| B. POWER PLANT AT KHANOT | | |
| Transmission Length Khanot-Jamshoro | 33 km | 33 km |
| Peak Losses | 438 kW | 3,902 kW |
| Annual Losses | 2,225 MWH | 19,825 MWH |
| Value of Losses | $111,300 | $991,300 |
| Incremental Cost of Losses | - | $880,000 |

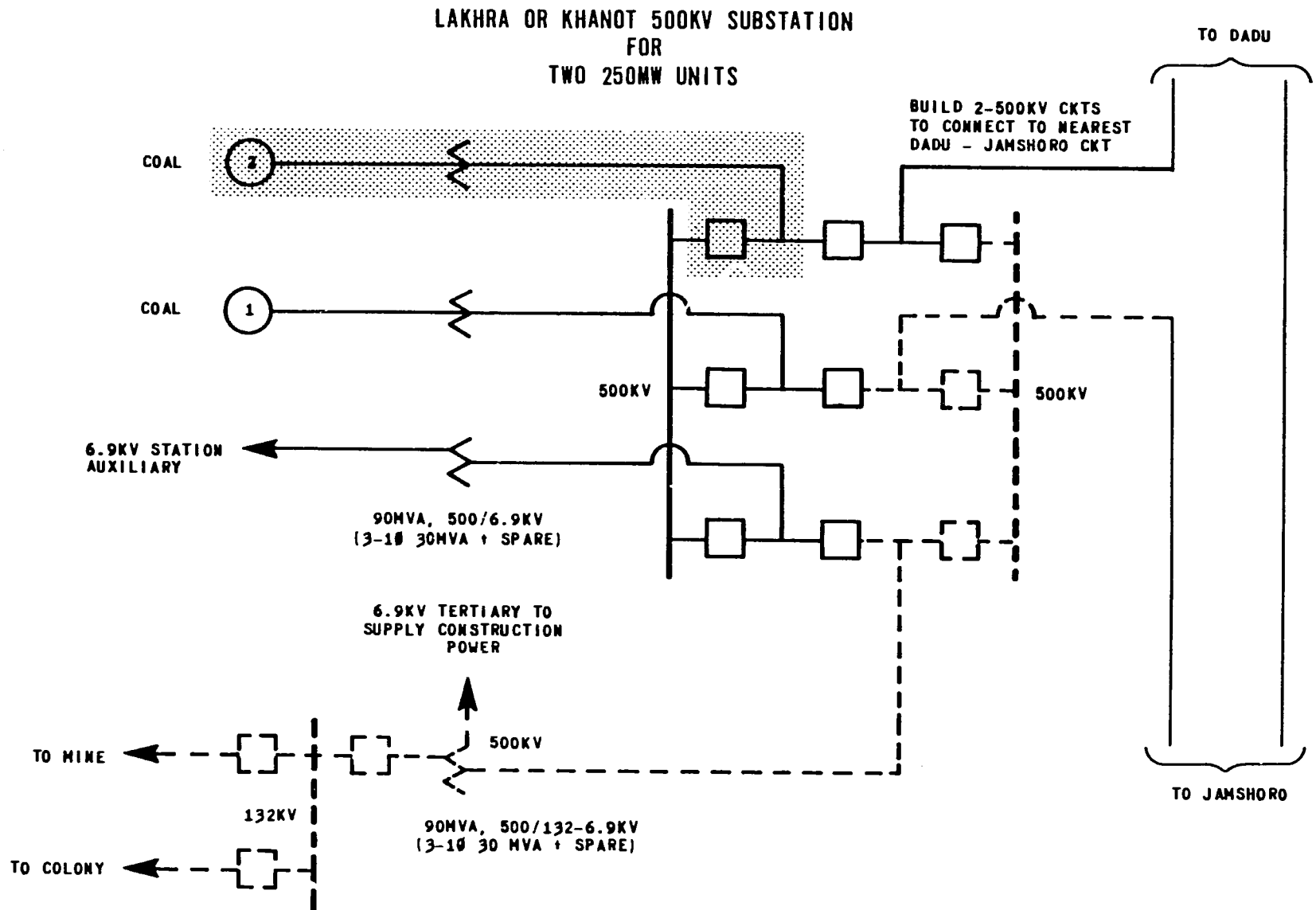


FACILITIES REQUIRED WITH LAKHRA PROJECT - UNIT 2

FACILITIES REQUIRED WITH LAKHRA PROJECT - UNIT 1

FACILITIES REQUIRED FOR MINING AND CONSTRUCTION POWER

LAKHRA POWER FEASIBILITY STUDY

COAL FIRED UNITS LOCATED AT
MINE(LAKHRA) OR AT KHANOT
SITE CONNECTED VIA 500KV

EXHIBIT 3.30

## CAPITAL COSTS OF LAKHRA TRANSMISSION FOR TWO 250 MW UNITS JULY 1985 U.S. DOLLARS x 1,000[a]

| | Transmission | Substation Jamshoro | Substation Lakhra | Total |
|---|---|---|---|---|
| **A. Without Import Duty and Interest During Construction** | | | | |
| Constr. Power | 2,216 | 0 | 4,304 | 6,520 |
| Unit 1 | 2,216 | 0 | 7,866 | 10,082 |
| Unit 2 | 0 | 4,261 | 3,226 | 7,487 |
| TOTAL | 4,432 | 4,261 | 15,396 | 24,089 |
| **B. Including Import Duty and Interest During Construction** | | | | |
| Constr. Power | 3,352 | 0 | 6,404 | 9,756 |
| Unit 1 | 3,352 | 0 | 11,705 | 15,057 |
| Unit 2 | 0 | 6,444 | 4,800 | 11,244 |
| TOTAL | 6,704 | 6,444 | 22,909 | 36,057 |

(a) Refer to Appendix 3.5 for additional information regarding these costs.

## PLANT AND TRANSMISSION CAPITAL COST FOR TWO 250 MW LAKHRA PLANT JULY 1985 U.S. DOLLARS x 1,000[a]

| Description | MW | Total Project Capital Costs | | | Capital Cost ($/kW) | | |
|---|---|---|---|---|---|---|---|
| | | Plant[b] | Transm.[c] | Total | Plant | Transm. | Total |
| Constr. Power[d] | - | - | 6,520 | 6,520 | | | |
| Lakhra 1 | 250 | 287,158 | 10,082 | 297,240 | | | |
| Subtotal (Unit 1) | | 287,158 | 16,602 | 303,760 | 1,149 | 66 | 1,215 |
| Lakhra 2 | 250 | 173,412 | 7,487 | 180,899 | 693 | 30 | 723 |
| TOTAL PLANT | 500 | 460,570 | 24,089 | 484,659 | 921[e] | 48 | 969 |
| Percent | | 95% | 5% | 100% | 95% | 5% | 100% |

(a) July 1985 dollars excluding import duties and interest during construction.

(b) Refer to Chapter 8, Table 8.1 for power plant cost details.

(c) Refer to Exhibit 3.31 for transmission cost details.

(d) Facilities for supplying mining and plant construction power requirements. These facilities are also required for Lakhra Unit 1.

(e) This figure was reduced by approximately 20 percent ($734.5/kW) for the third series of WASP studies per instruction of USAID and WAPDA to account for favorable pricing because of depressed world market conditions.

## 1991 PLAN 1 1x300MW IMPORTED COAL UNIT

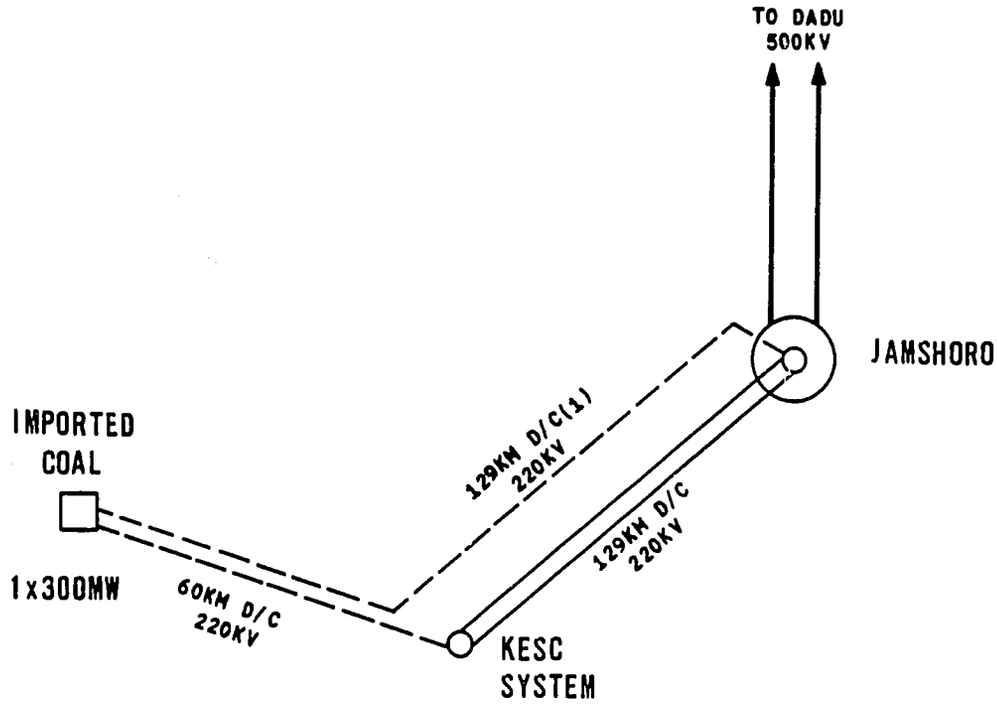


500KV 220KV

EXISTING

PROPOSED

D/C - DOUBLE CIRCUIT STRUCTURE

D/C(1) - DOUBLE CIRCUIT STRUCTURES WITH ONLY ONE CIRCUIT STRUNG. CONDUCTOR FOR SECOND CIRCUIT TO BE STRUNG WHEN A FUTURE CIRCUIT IS REQUIRED.

1991 PLANS 2 AND 2A 1x600MW IMPORTED COAL UNIT

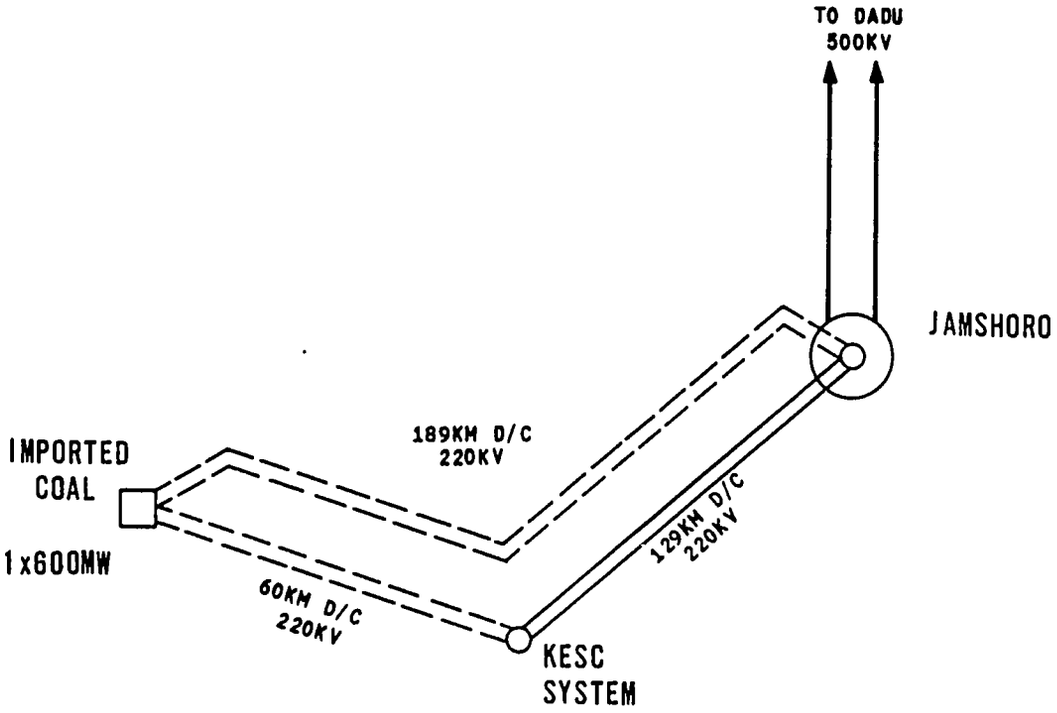


PLAN 2A SHOWN. PLAN 2 IS SAME AS 2A
EXCEPT ONLY ONE CIRCUIT BETWEEN IMPORTED
COAL PLANT AND JAMSHORO(D/C-1, 189KM 220KV)

550KV 220KV

EXISTING

PROPOSED

D/C - DOUBLE CIRCUIT STRUCTURE



110

1993 PLAN 3 2x600MW IMPORTED COAL UNITS

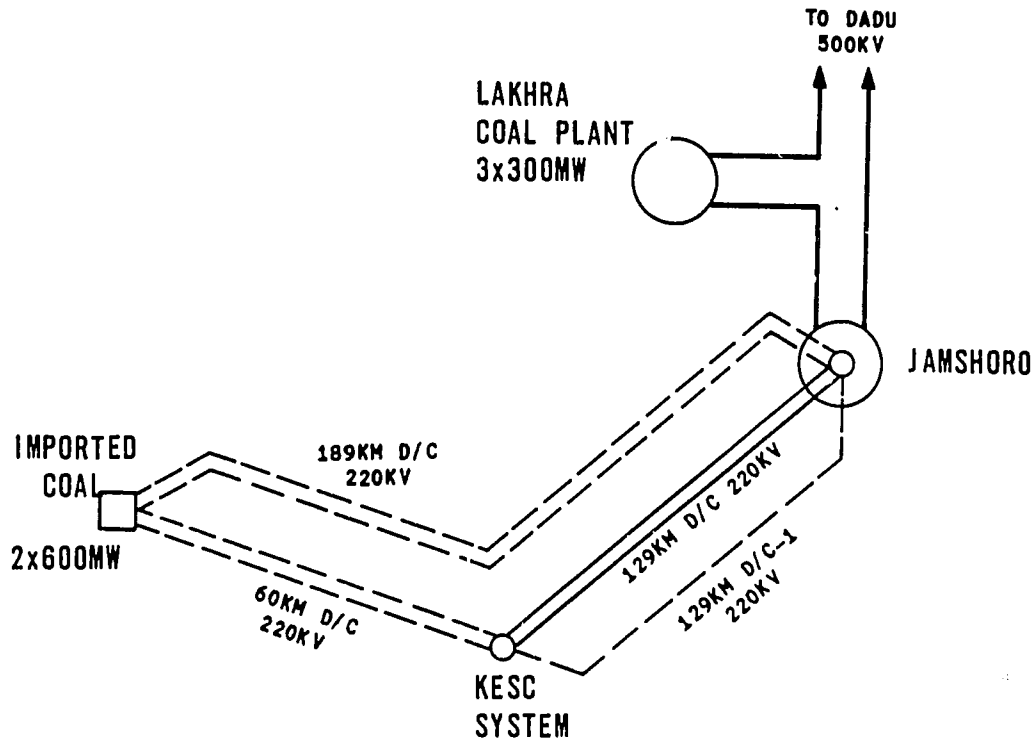


500KV 220KV

EXISTING

PROPOSED

D/C - DOUBLE CIRCUIT STRUCTURE

D/C(1) - DOUBLE CIRCUIT STRUCTURES WITH ONLY ONE CIRCUIT STRUNG. CONDUCTOR FOR SECOND CIRCUIT TO BE STRUNG WHEN A FUTURE CIRCUIT IS REQUIRED.

1993 PLAN 4 2x600MW IMPORTED COAL UNITS

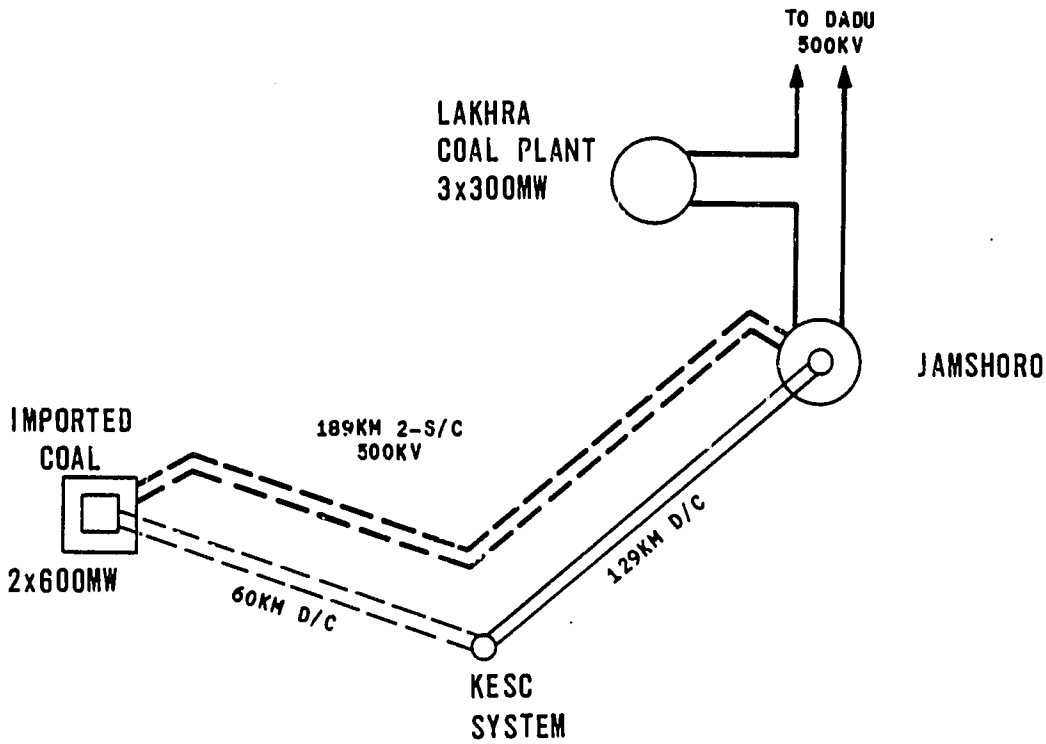


500KV 220KV

EXISTING

PROPOSED

2-S/C - TWO SINGLE CIRCUIT STRUCTURES

D/C - DOUBLE CIRCUIT STRUCTURE

IMPORTED COAL 220KV SUBSTATION

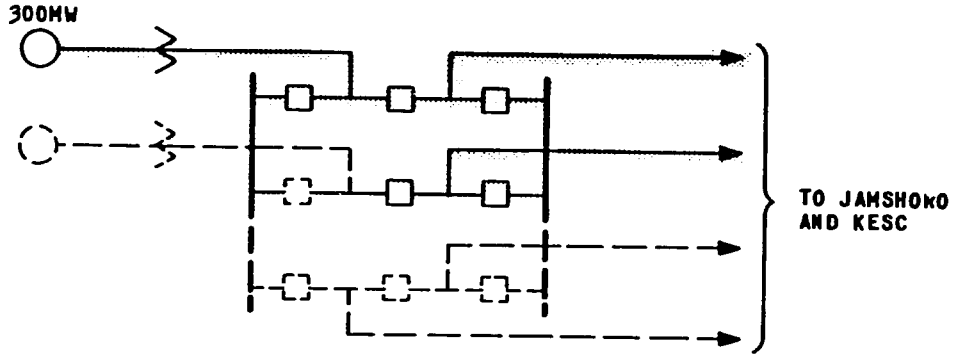


EXISTING

FUTURE

PROPOSED

LAKHRA POWER FEASIBILITY STUDY
IMPORTED COAL 220KV SUBSTATION

PLAN 1

EXHIBIT 3.37

IMPORTED COAL 220KV SUBSTATION

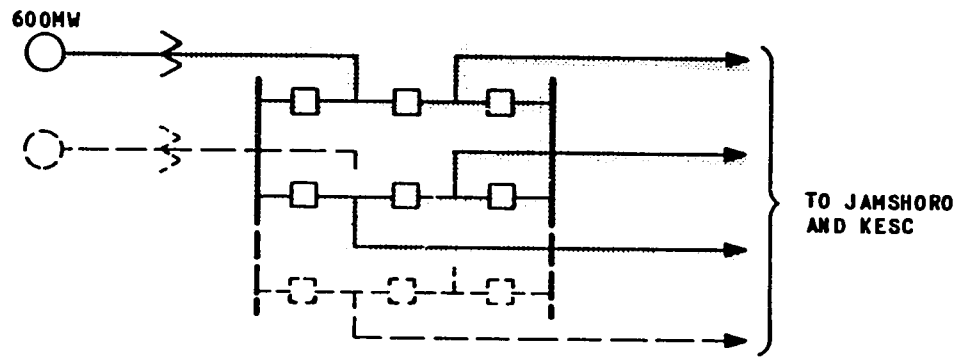


EXISTING

FUTURE

PROPOSED

LAKHRA POWER FEASIBILITY STUDY
IMPORTED COAL 220KV SUBSTATION

PLAN 2

EXHIBIT 3.38

IMPORTED COAL 220KV SUBSTATION

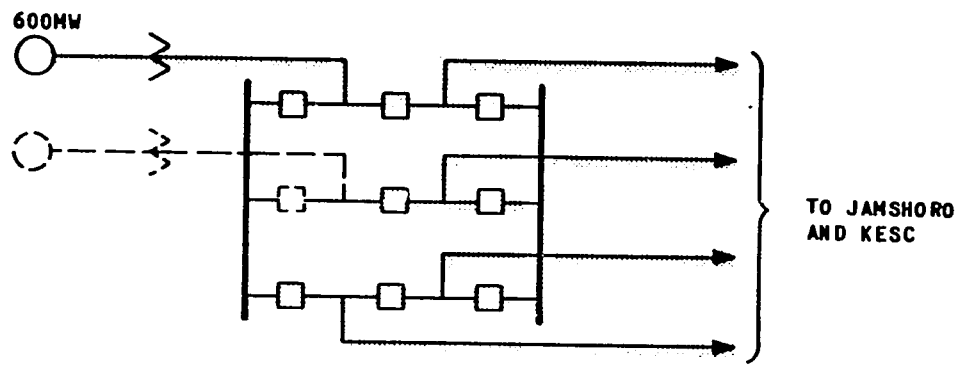


EXISTING

FUTURE

PROPOSED

LAKHRA POWER FEASIBILITY STUDY
IMPORTED COAL 220KV SUBSTATION

PLAN 2A

EXHIBIT 3.39

## IMPORTED COAL 220KV SUBSTATION

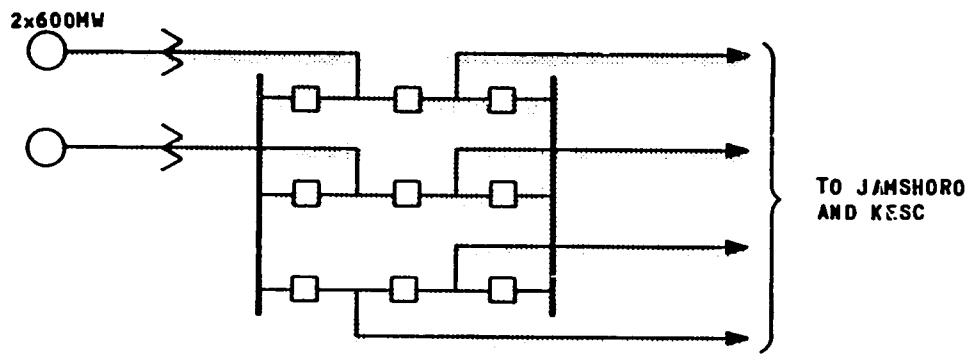


EXISTING

FUTURE

PROPOSED

LAKHRA POWER FEASIBILITY STUDY
IMPORTED COAL 220KV SUBSTATION

PLAN 3

EXHIBIT 3.40

# IMPORTED COAL 500/220KV SUBSTATION

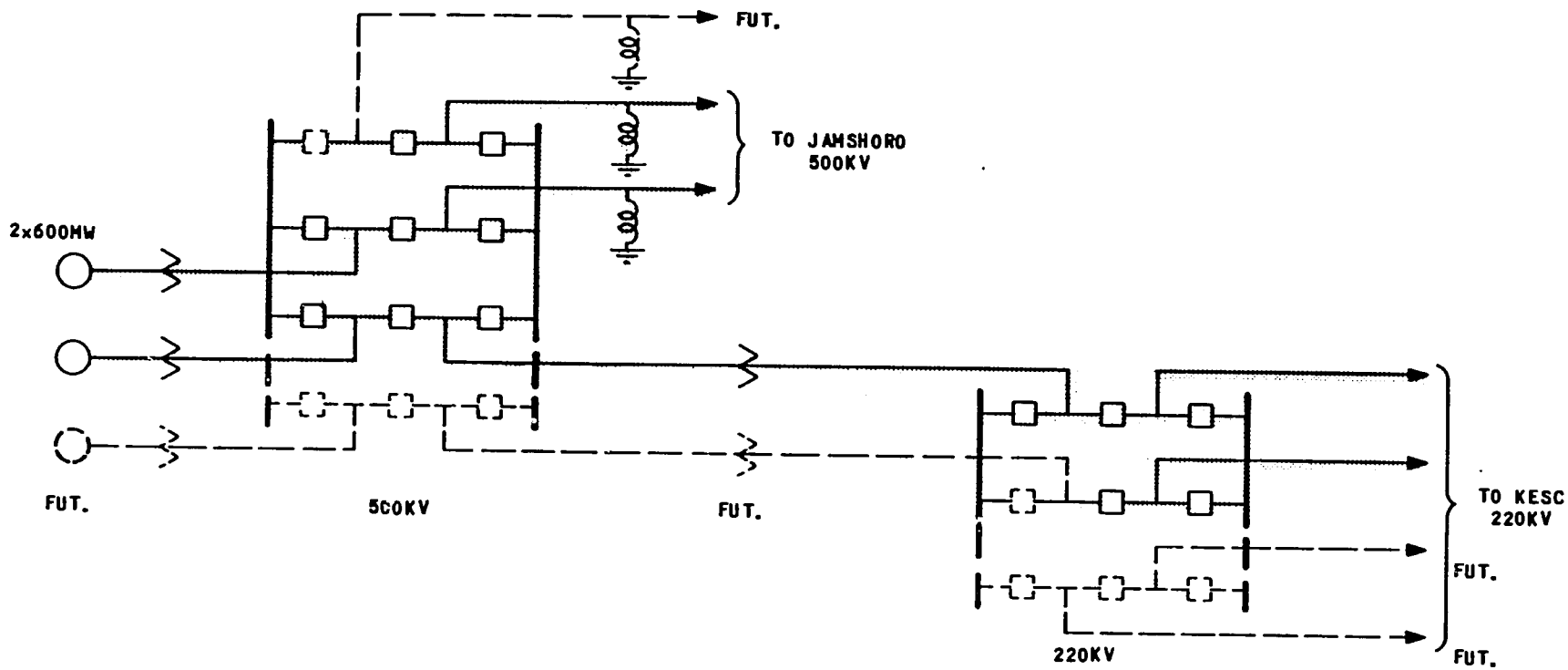


EXISTING

FUTURE

PROPOSED

LAKHRA POWER FEASIBILITY STUDY
IMPORTED COAL 500/220KV SUBSTATION

PLAN 4

EXHIBIT 3.41

CONCEPTUAL KESC 220KV SUBSTATION

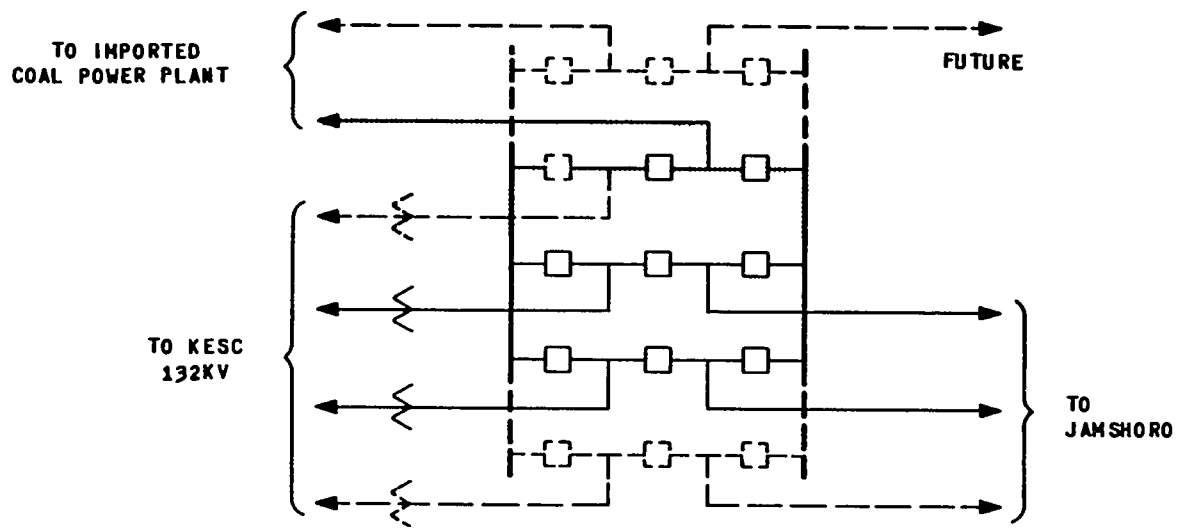


EXISTING

FUTURE

PROPOSED

LAKHRA POWER FEASIBILITY STUDY
CONCEPTUAL KESC 220KV SUBSTATION
WITH CONNECTIONS TO IMPORT COAL PLANT
PLAN 1

EXHIBIT 3.42

CONCEPTUAL KESC 220KV SUBSTATION

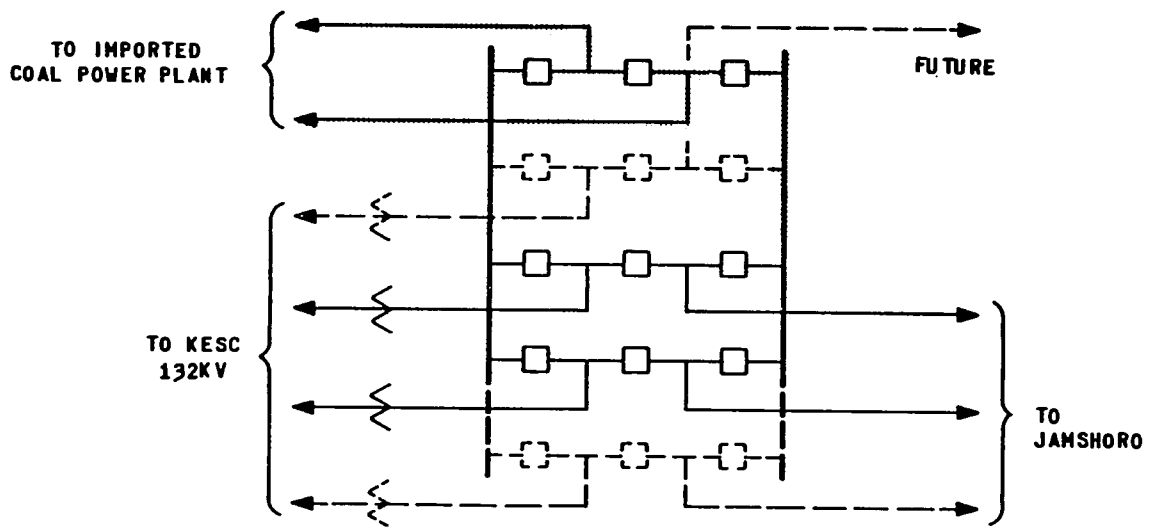


EXISTING

FUTURE

PROPOSED

LAKHRA POWER FEASIBILITY STUDY
CONCEPTUAL KESC 220KV SUBSTATION
WITH CONNECTIONS TO IMPORT COAL PLANT
PLANS 2 & 2A AND PLAN 4

EXHIBIT 3.43

CONCEPTUAL KESC 220KV SUBSTATION

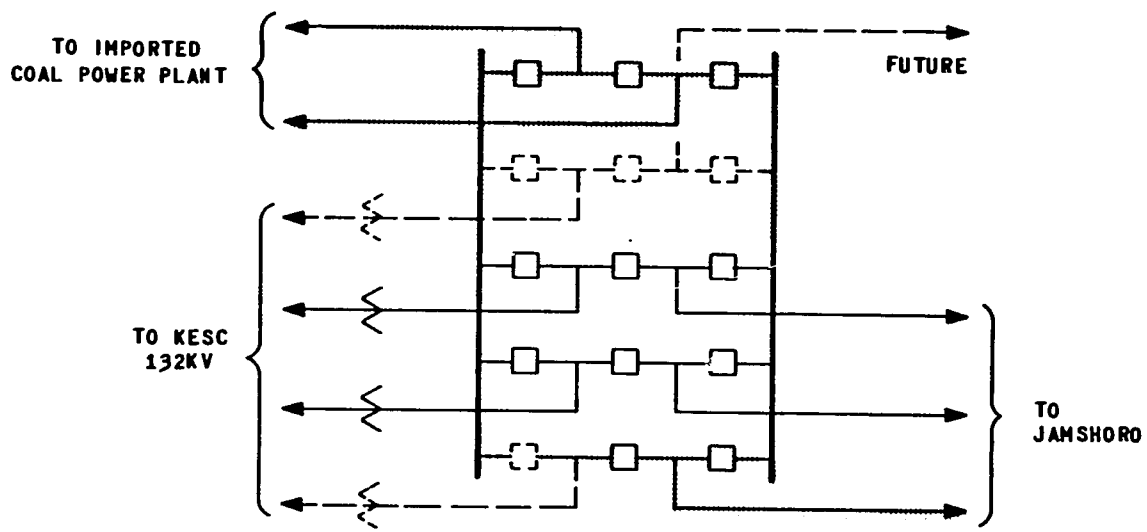


EXISTING

FUTURE

PROPOSED

LAKHRA POWER FEASIBILITY STUDY
CONCEPTUAL KESC 220KV SUBSTATION
WITH CONNECTIONS TO IMPORT COAL PLANT
PLAN 3

EXHIBIT 3.44

JAMSHORO 500/220KV SUBSTATION

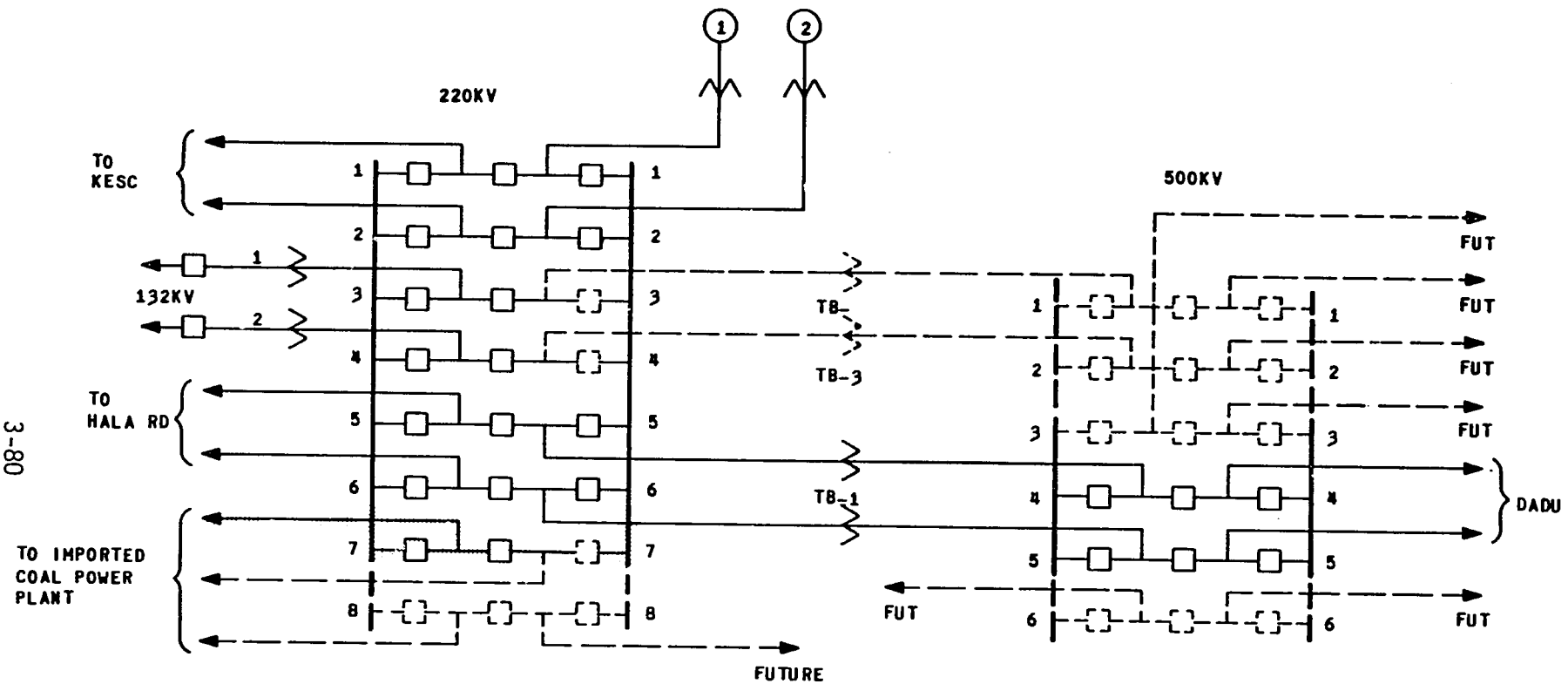


EXISTING BY 1990

FUTURE

PROPOSED

LAKHRA POWER FEASIBILITY STUDY
JAMSHORO 500/220KV SUBSTATION
PLAN 1 AND PLAN 2

EXHIBIT 3.45

JAMSHORO 500/220KV SUBSTATION

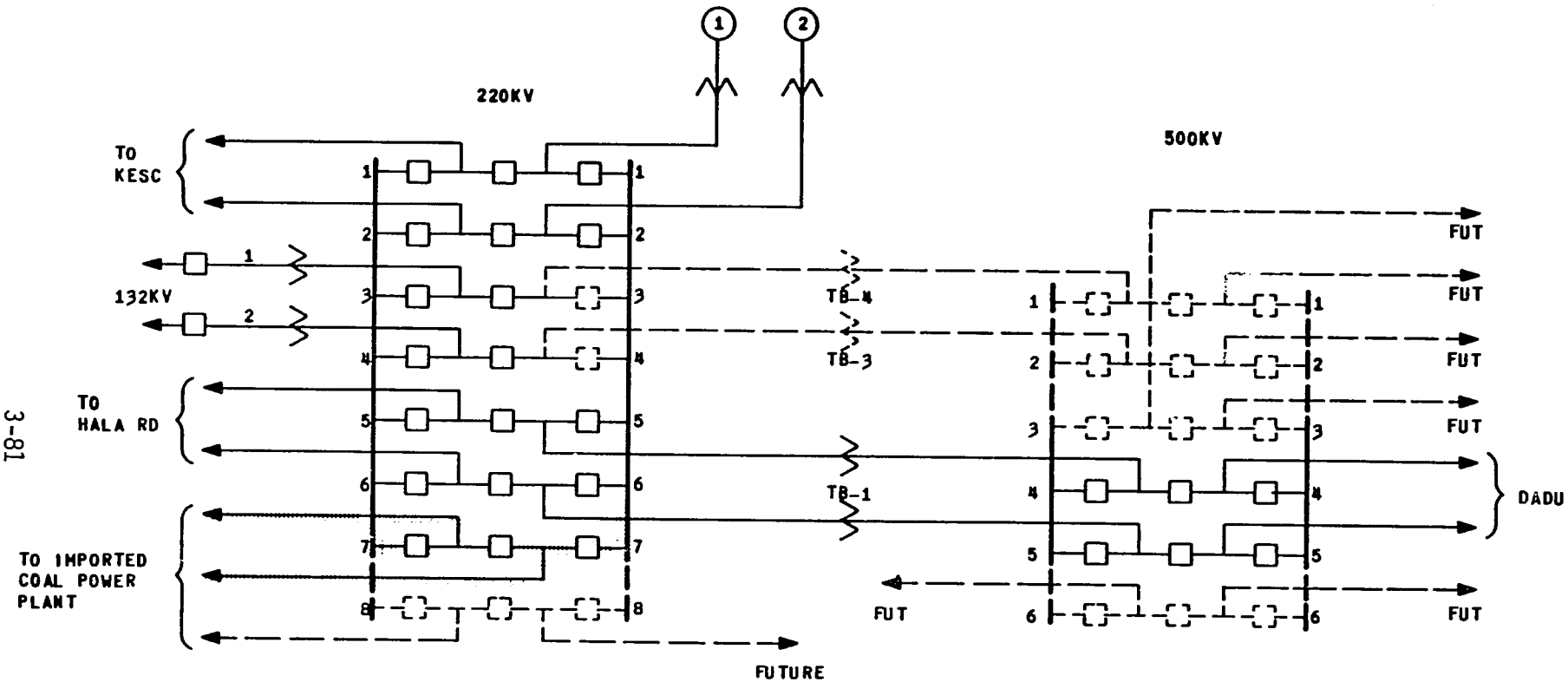


EXISTING BY 1990

FUTURE

PROPOSED

LAKHRA POWER FEASIBILITY STUDY
JAMSHORO 500/220KV SUBSTATION
PLAN 2A

EXHIBIT 3.46



221

# JAMSHORO 500/220KV SUBSTATION

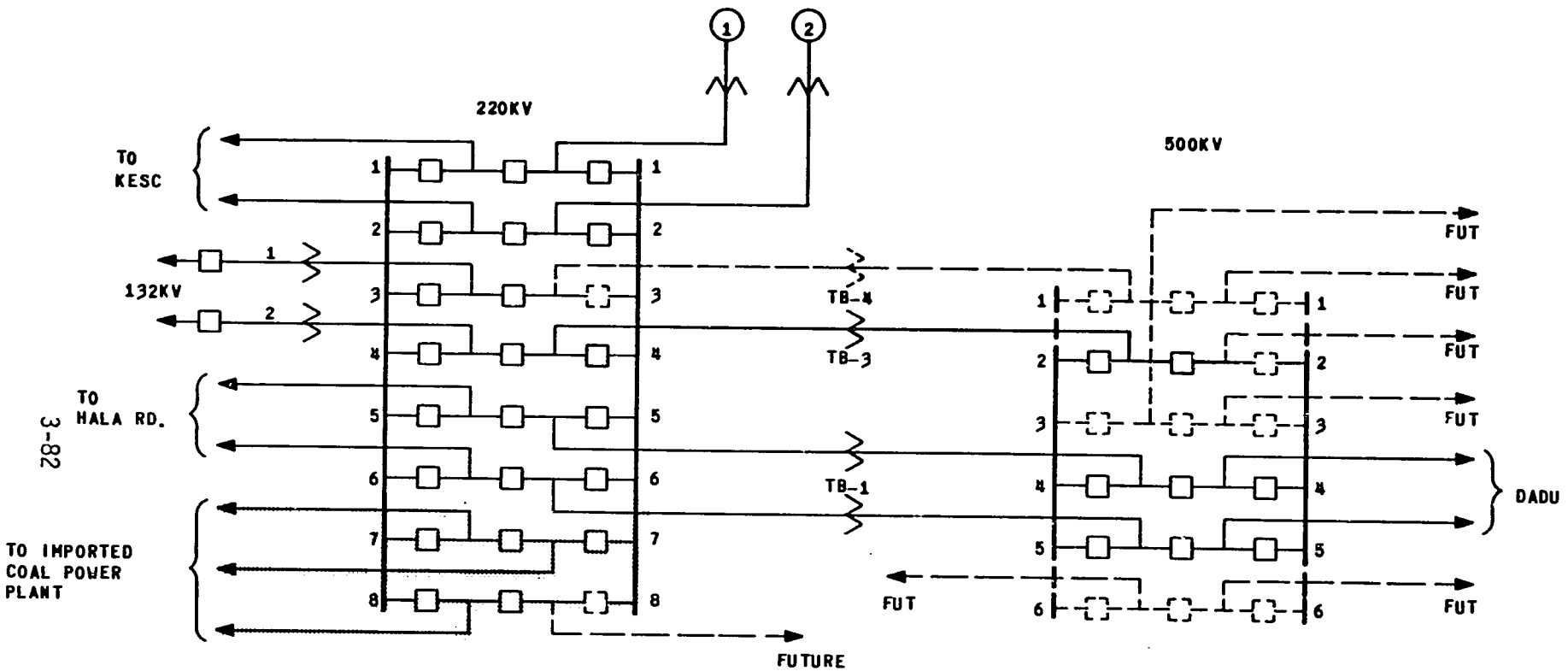


EXISTING BY 1993

FUTURE

PROPOSED

LAKHRA POWER FEASIBILITY STUDY
JAMSHORO 500/220KV SUBSTATION
PLAN 3

EXHIBIT 3.47

JAMSHORO 500/220KV SUBSTATION

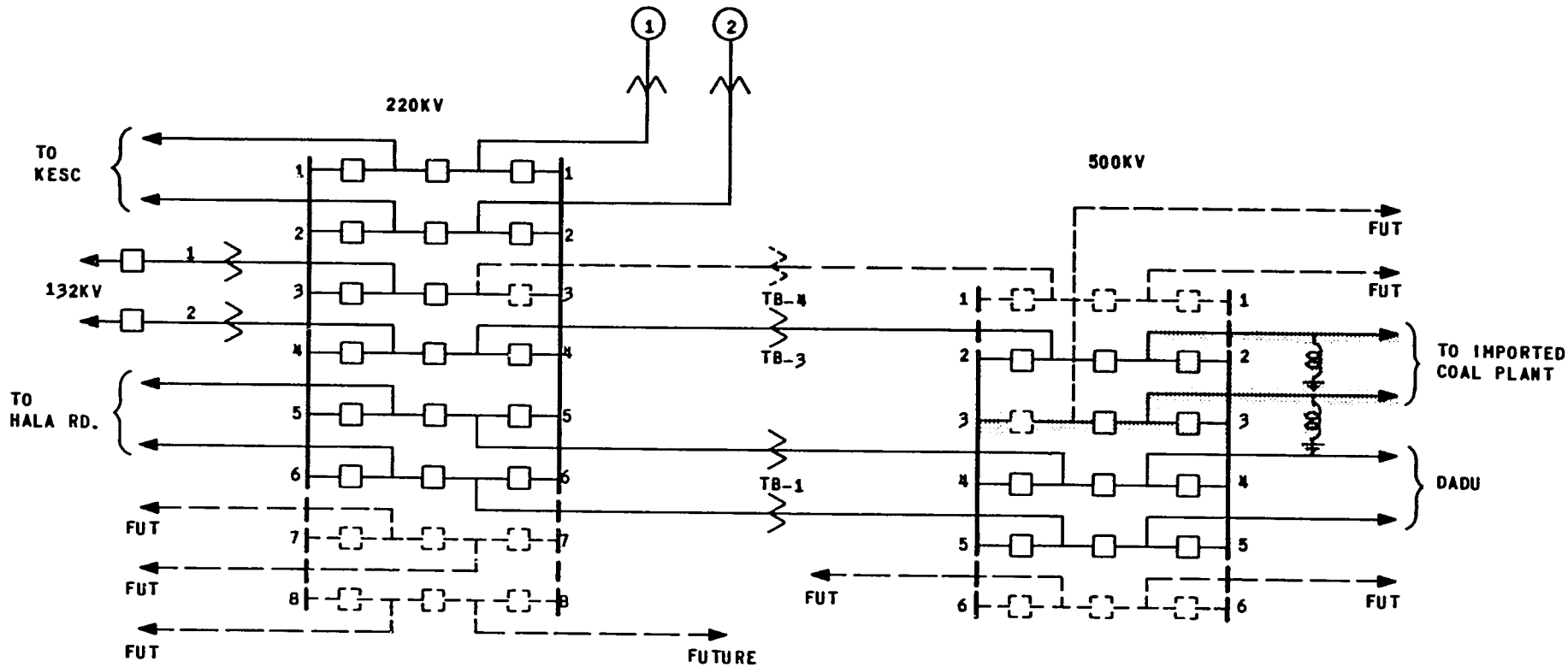


EXISTING BY 1993

FUTURE

PROPOSED

LAKHRA POWER FEASIBILITY STUDY
JAMSHORO 550/220KV SUBSTATION
PLAN 4

EXHIBIT 3.48

## CAPITAL COSTS OF IMPORTED COAL
## ALTERNATIVE TRANSMISSION PLANS
## JULY 1985 U.S. DOLLARS x 1,000[a]

| | Transmission | | Substation | | | |
|---|---|---|---|---|---|---|
| | 500 kV | 220 kV | Import Coal | KESC System | Jamshoro | Total |
| PLAN 1<br>1 x 300 MW | - | 23,600 | 5,095 | 843 | 843 | 30,381 |
| PLAN 2<br>1 x 600 MW | - | 30,050 | 6,986 | 1,305 | 843 | 39,184 |
| PLAN 2A<br>1 x 600 MW | - | 40,290 | 7,828 | 1,305 | 1,305 | 50,728 |
| PLAN 3<br>2 x 600 MW | - | 54,180 | 12,677 | 2,107 | 2,107 | 71,071 |
| PLAN 4<br>2 x 600 MW | 91,000 | 9,710 | 28,333 | 1,305 | 6,759 | 137,107 |

(a) Includes import duty and interest during construction.

## ECONOMIC COMPARISON OF IMPORTED COAL TRANSMISSION ALTERNATIVES
## U.S. DOLLARS x 1,000

| | Plan 2 | Plan 2A |
|---|---|---|
| 1 x 600 MW Imported Coal Plant | | |
| Annual Fixed Charges on Capital Cost (a) | 4,157 | 5,381 |
| Annual Operating and Maintenance Cost (b) | 901 | 1,167 |
| Annual Cost of Losses (c) | 4,097 | 3,077 |
| TOTAL | 9,155 | 9,625 |

| 2 x 600 MW Imported Coal Plant | Plan 3 | Plan 4 |
|---|---|---|
| Annual Fixed Charges on Capital Cost (a) | 7,539 | 14,544 |
| Annual Operating and Maintenance Cost (b) | 1,635 | 3,153 |
| Annual Cost of Losses (c) | 12,276 | 3,666 |
| TOTAL | 21,450 | 21,363 |

(a) Fixed change rate 0.10608 (10% for 30 years). Capital costs include imported duty and interest during construction.

(b) 2.3% of capital cost - includes material and equipment spares, transmission and substation O&M, administrative overhead and insurance.

(c) Incremental transmission losses from power plant to Jamshoro Substation. See Exhibit 3.51.

## COMPUTATION OF TRANSMISSION LOSSES FROM IMPORT COAL PLANT TO JAMSHORO

| | Import Coal - 1x600 MW | | Import Coal - 2x600 MW | |
|---|---|---|---|---|
| | Plan 2 | Plan 2A | Plan 3 | Plan 4 |
| **Assumptions** | | | | |
| Voltage - kV | 220 | 220 | 220 | 500 |
| No. of Circuits | 3 | 4 | 4 | 2 |
| Phase Conductor | 2-954 ACSR | 2-954 ACSR | 2-954 ASCR | 3-927 AAAC |
| Resistance per Phase Ω/km | 0.0344 | 0.0344 | 0.0344 | 0.0265 |
| Transmission Length - km | 189 | 189 | 189 | 189 |
| Loading: | | | | |
| Peak Load (100% pf) - MVA | 600 | 600 | 1200 | 1200 |
| Load per Circuit - MVA | 200 | 150 | 300 | 600 |
| Current at 100% Voltage - amps/phase | 525 | 394 | 787 | 693 |
| Power Cost ¢/kwh | 5 | 5 | 5 | 5 |
| Plant Capacity Factor - % | 75 | 75 | 75 | 75 |
| Transmission Loss Factor - % | 58 | 58 | 58 | 58 |
| **Calculated Losses** | | | | |
| Peak Losses All Circuits - kw | 16,128 | 12,111 | 48,323 | 14,432 |
| Annual Losses - MWH | 81,945 | 61,534 | 245,519 | 73,326 |
| Value of Losses - $,000 | 4,097 | 3,077 | 12,276 | 3,666 |

# APPENDIX 3.1

## WASP-3
## COMPUTER GENERATED STUDY REPORT

## FIRST SERIES OF GENERATION PLANNING STUDIES

## ABREVIATIONS USED IN FIRST SERIES OF GENERATION PLANNING STUDIES

| Abrev. | Name |
|---|---|
| BSH1 | Basha #1 |
| BSH2 | Basha #2 |
| BSH3 | Basha #3 |
| BSH4 | Basha #4 |
| BUN1 | Bunji #1 |
| BUN2 | Bunji #2 |
| CLIM | Imported Coal |
| DAS1 | Dasu #1 |
| DAS2 | Dasu #2 |
| DAS3 | Dasu #3 |
| DAS4 | Dasu #4 |
| DUKI | Duki |
| FDGT | Faislabad GT |
| FDST | Faislabad Stream |
| GUCC | Gudu Combined Cycle |
| GUGT | Gudu GT |
| GUD1 | Gudu #1 |
| GUD2 | Gudu #2 |
| GUD4 | Gudu Steam #4 |
| HA-1 | Tarbela #11 |
| HA-2 | Tarbela #12 |
| HA-3 | Tarbela #13 |
| HA-4 | Tarbela #14 |
| HA-5 | Tarbela #15 |
| HA-6 | Tarbela #16 |
| HA-7 | Kalabagh #1 |
| HA-8 | Kalabagh #2 |
| HA-9 | Kalabagh #3 |
| HA10 | Kalabagh #4 |
| HA11 | Kalabagh #5 |
| HA12 | Tarbela #17 |
| HA13 | Kalabagh #6 |
| HA14 | Kalabagh #7 |
| HA15 | Kalabagh #8 |
| HA16 | Kalabagh #9 |
| HA17 | Kalabagh #10 |
| HA13 | Kalabagh #11 |
| HA19 | Basha #1 |
| HA20 | Kalabagh #12 |
| HA21 | Basha #2 |
| HA22 | Basha #3 |
| HA23 | Basha #4 |
| HA24 | Dasu #1 |
| HA25 | Dasu #2 |
| HA26 | Dasu #3 |
| HA27 | Dasu #4 |
| HA28 | Thakot #1 |
| HB-1 | Low Head #2 |
| HB-2 | Low Head #3 |
| HB-3 | Low Head #4-5 |
| HB-4 | Bunji #1 |
| HB-5 | Bunji #2 |
| HDOL | Hyderabad Oil |
| HDST | Hyderabad Steam |
| HYD1 | Large Regulated Hdro |
| HYD2 | Small Hydro |
| ICFG | Imported Coal with Flue Gas Desulphurization |
| JOF1 | Jamshoro Oil #1 |
| JOF2 | Jamshoro Oil #2 |
| KAGT | Kotadu GT |
| KANP | Kanuee Nuc. |
| KLB1 | Kalabagh #1 |
| KLB2 | Kalabagh #2 |
| KLB3 | Kalabagh #3 |
| KLB4 | Kalabagh #4 |
| KLB5 | Kalabagh #5 |
| KLB6 | Kalabagh #6 |
| KLB7 | Kalabagh #7 |
| KLB8 | Kalabagh #8 |
| KLB9 | Kalabagh #9 |
| KL10 | Kalabagh #10 |
| KL11 | Kalabagh #11 |
| KL12 | Kalabagh #12 |
| KOT1 | Kotri Steam #1 |
| KOT2 | Kotri Steam #2 |
| KTGT | Korangi GT |
| KTP1 | Korangi #1 |
| KTP2 | Korangi #2 |
| KWWS | West Wharf Steam |
| LAKH | Lakhra #1 |
| LAK2 | Lakhra #2-3 |
| LHH2 | Low Head #2 |
| LHH3 | Low Head #3 |
| LH45 | Low Head #4-5 |
| MCTH | Mid-Country Thermal |
| MESC | Multan Elec. |
| MNOL | Multan Steam |
| MNGA | Mangla |
| MN10 | Mangla #10 |
| MULT | Multan |
| NUKE | Nuclear |
| PPR1 | Pipri Steam #1 |
| PPR2 | Pipri |
| QTST | Quetta Steam |
| QTG1 | Quetta GT #1 |
| QTG2 | Quetta GT #2 |
| QTG3 | Quetta GT #3 |
| QTG4 | Quetta GT #4 |
| REMA | Remla |
| REPC | REPCo |
| RSHY | Run of River |
| SHG1 | Shadkra GT #1 |
| SHG2 | Shadkra GT #2 |
| SKST | Sukkur Steam |
| STGT | Sind Incl. Trade GT |
| TAR8 | Tarbela #8 |
| TA10 | Tarbela #9-10 |
| TB11 | Tarbeal #11 |
| TB12 | Tarbela #12 |
| TB13 | Tarbela #13 |
| TB14 | Tarbela #14 |
| TB15 | Tarbela #15 |
| TB16 | Tarbeal #16 |
| TB17 | Tarbela #17 |
| THK1 | Thakot #1 |
| V-GT | Combustion Turbine |
| WRSK | Warsak |

SUMMARY REPORT
ON A GENERATION EXPANSION PLAN FOR

PAKISTAN GENERATION PLANNING STUDY 1986-2005 LAKHRA

PROCESSED BY THE WASP-III COMPUTER PROGRAM PACKAGE
OF THE IAEA

STUDY PERIOD

1986 - 2005

PLANNING PERIOD

1986 - 2005

CONSTRUCTION COSTS
IN MILLION $
ARE REPORTED ONLY FOR
PLANTS COMMISSIONED
DURING THE PLANNING PERIOD.
ALL OTHER INFORMATION IS GIVEN
FOR THE WHOLE STUDY PERIOD.

DATE OF REPORT : MARCH 1985 WA
STUDY CARRIED OUT BY : PDA, GCII, USAID-ISB AND PAEC

INFORMATION SUPPLIED BY USER :

PARTICIPANTS:

| | |
|---|---|
| M. ARSHAD | WATER AND POWER DEVELOPMENT AUTHORITY (WAPDA) |
| A. KHAN | WAPDA |
| A. RAZZAQ | WAPDA |
| S. IQBAL | WAPDA |
| I. JALAL | PAKISTAN ATOMIC ENERGY COMMISSION (PAEC) |
| J. GATES | GILBERT/COMMONWEALTH INTL. INC. |

THIS IS A LIST OF THE DIFFERENT TYPES OF ELECTRIC POWER PLANTS
USED IN THE STUDY.
THE NUMERIC CODES ARE USED BY THE COMPUTER PROGRAMS

| | | |
|---|---|---|
| 0 | COAL | COAL PLANTS |
| 1 | HSDP | HSD PLANTS |
| 2 | FOIL | FURNACE OIL PLANTS |
| 3 | GASF | GAS-FIRED PLANTS |
| 4 | NUCL | NUCLEAR PLANTS |
| | HYD1 | LARGE REGULATED HYDR |
| | HYD2 | SMALL HYDRO |

VALUES ARE FOR THE YEAR ENDING ON JUNE 30 OF THE YEAR SHOWN

ANNUAL LOAD DESCRIPTION

PERIOD(S) PER YEAR : 6

| YEAR | PEAKLOAD MW | GR.RATE % | MIN.LOAD MW | GR.RATE % | ENERGY GWH | GR.RATE % | LOADFACTOR % |
|---|---|---|---|---|---|---|---|
| 1986 | 4640.0 | - | 1545.1 | - | 24824.9 | - | 61.08 |
| 1987 | 5087.0 | 9.6 | 1693.9 | 9.6 | 27216.4 | 9.6 | 61.08 |
| 1988 | 5581.0 | 9.7 | 1858.4 | 9.7 | 29859.4 | 9.7 | 61.08 |
| 1989 | 6251.0 | 12.0 | 2081.5 | 12.0 | 33444.0 | 12.0 | 61.08 |
| 1990 | 6970.0 | 11.5 | 2321.0 | 11.5 | 37290.8 | 11.5 | 61.08 |
| 1991 | 7736.0 | 11.0 | 2576.0 | 11.0 | 41389.0 | 11.0 | 61.08 |
| 1992 | 8550.0 | 10.5 | 2847.1 | 10.5 | 45744.1 | 10.5 | 61.08 |
| 1993 | 9330.0 | 9.1 | 3106.8 | 9.1 | 49917.2 | 9.1 | 61.08 |
| 1994 | 10160.0 | 8.9 | 3383.2 | 8.9 | 54357.9 | 8.9 | 61.08 |
| 1995 | 11043.0 | 8.7 | 3677.2 | 8.7 | 59082.1 | 8.7 | 61.08 |
| 1996 | 11977.0 | 8.5 | 3988.2 | 8.5 | 64079.2 | 8.5 | 61.08 |
| 1997 | 12964.0 | 8.2 | 4316.9 | 8.2 | 69359.7 | 8.2 | 61.08 |
| 1998 | 14004.0 | 8.0 | 4663.2 | 8.0 | 74923.9 | 8.0 | 61.08 |
| 1999 | 15096.0 | 7.8 | 5026.8 | 7.8 | 80766.3 | 7.8 | 61.08 |
| 2000 | 16240.0 | 7.6 | 5407.8 | 7.6 | 86886.9 | 7.6 | 61.08 |
| 2001 | 17435.0 | 7.4 | 5805.7 | 7.4 | 93280.4 | 7.4 | 61.08 |
| 2002 | 18680.0 | 7.1 | 6220.3 | 7.1 | 99941.4 | 7.1 | 61.08 |
| 2003 | 19973.0 | 6.9 | 6650.8 | 6.9 | 106859.2 | 6.9 | 61.08 |
| 2004 | 21311.0 | 6.7 | 7096.4 | 6.7 | 114017.7 | 6.7 | 61.08 |
| 2005 | 22692.0 | 6.5 | 7556.2 | 6.5 | 121406.3 | 6.5 | 61.08 |

FIXED SYSTEM
SUMMARY DESCRIPTION OF THERMAL PLANTS IN YEAR 1986

| NO. | NAME | NO. OF SETS | MIN. LOAD MW | CAPA CITY MW | HEAT RATES KCAL/KWH BASE LOAD | HEAT RATES KCAL/KWH AVGE INCR | FUEL COSTS CENTS/ MILLION KCAL DMSTC | FUEL COSTS CENTS/ MILLION KCAL FORGN | FUEL TYPE | FAST SPIN RES % | FOR % | DAYS SCHL MAIN | MAIN CLAS MW | C&M (FIX) $/KWM | O&M (VAR) $/MWH |
|---|---|---|---|---|---|---|---|---|---|---|---|---|---|---|---|
| 3 | MULT | 4 | 25. | 60. | 3148. | 2562. | 0.0 | 1750.0 | 2 | 11 | 5.0 | 30 | 70. | 0.40 | 0.87 |
| 4 | FDST | 2 | 30. | 60. | 2961. | 2813. | 0.0 | 1750.0 | 2 | 11 | 5.0 | 30 | 70. | 0.34 | 0.97 |
| 5 | FDGT | 8 | 20. | 25. | 4300. | 3180. | 0.0 | 2625.0 | 1 | 20 | 15.0 | 20 | 30. | 0.56 | 2.07 |
| 6 | SHG1 | 2 | 4. | 10. | 4778. | 3432. | 0.0 | 2625.0 | 1 | 20 | 15.0 | 20 | 30. | 0.45 | 3.72 |
| 7 | SHG2 | 4 | 4. | 13. | 4778. | 3432. | 0.0 | 2625.0 | 1 | 20 | 15.0 | 20 | 30. | 0.45 | 3.72 |
| 8 | GUD1 | 2 | 70. | 110. | 2955. | 2268. | 1750.0 | 0.0 | 3 | 11 | 5.0 | 30 | 150. | 0.42 | 1.31 |
| 9 | GUD2 | 1 | 100. | 210. | 2600. | 2102. | 1750.0 | 0.0 | 3 | 11 | 5.0 | 30 | 225. | 0.42 | 1.31 |
| 10 | SKST | 4 | 6. | 12. | 3781. | 3425. | 1750.0 | 0.0 | 3 | 11 | 4.0 | 30 | 30. | 0.87 | 1.89 |
| 11 | HDST | 2 | 4. | 7. | 5925. | 5179. | 1750.0 | 0.0 | 3 | 11 | 4.0 | 30 | 30. | 0.87 | 1.89 |
| 12 | HDOL | 2 | 4. | 7. | 5750. | 4817. | 1750.0 | 0.0 | 3 | 11 | 5.0 | 25 | 30. | 0.87 | 1.89 |
| 13 | KOT1 | 2 | 12. | 15. | 4778. | 3195. | 1750.0 | 0.0 | 3 | 20 | 4.0 | 25 | 30. | 0.69 | 2.42 |
| 14 | KOT2 | 4 | 20. | 25. | 4300. | 3180. | 1750.0 | 0.0 | 3 | 20 | 4.0 | 29 | 30. | 0.69 | 2.42 |
| 15 | QTST | 2 | 4. | 8. | 4550. | 3860. | 850.0 | 0.0 | 0 | 20 | 5.0 | 30 | 30. | 0.45 | 4.00 |
| 16 | QTG1 | 1 | 2. | 5. | 4800. | 3432. | 0.0 | 2625.0 | 1 | 11 | 15.0 | 20 | 30. | 0.45 | 4.00 |
| 17 | QTG2 | 1 | 4. | 10. | 4800. | 3432. | 0.0 | 2625.0 | 1 | 11 | 15.0 | 20 | 30. | 0.45 | 4.00 |
| 18 | QTG3 | 1 | 16. | 20. | 4300. | 3432. | 0.0 | 2625.0 | 1 | 11 | 15.0 | 20 | 30. | 0.45 | 4.00 |
| 19 | STGT | 5 | 16. | 20. | 4300. | 3180. | 0.0 | 2625.0 | 1 | 20 | 15.0 | 20 | 30. | 0.45 | 3.00 |
| 20 | KTGT | 4 | 16. | 20. | 4300. | 3180. | 0.0 | 2625.0 | 1 | 20 | 15.0 | 20 | 30. | 0.45 | 3.00 |
| 21 | KTP1 | 2 | 25. | 66. | 3768. | 2693. | 0.0 | 1750.0 | 2 | 11 | 5.0 | 30 | 70. | 0.50 | 2.30 |
| 22 | KTP2 | 2 | 50. | 125. | 2978. | 2471. | 0.0 | 1750.0 | 2 | 11 | 5.0 | 30 | 150. | 0.50 | 2.30 |
| 23 | PPR1 | 2 | 85. | 210. | 2647. | 2316. | 0.0 | 1750.0 | 2 | 11 | 8.0 | 35 | 225. | 0.50 | 2.30 |
| 24 | KANP | 1 | 70. | 130. | 2838. | 2528. | 210.0 | 0.0 | 4 | 11 | 10.0 | 45 | 150. | 1.00 | 2.50 |
| 25 | KWAS | 2 | 12. | 33. | 4227. | 3454. | 0.0 | 1750.0 | 2 | 11 | 5.0 | 30 | 70. | 0.50 | 2.30 |
| 26 | QTG4 | 1 | 22. | 28. | 4300. | 3432. | 0.0 | 2625.0 | 1 | 11 | 15.0 | 30 | 30. | 0.50 | 2.30 |
| 27 | KAGT | 0 | 100. | 100. | 3185. | 3185. | 0.0 | 2625.0 | 1 | 0 | 20.0 | 30 | 150. | 0.45 | 3.00 |
| 28 | GUGT | 0 | 75. | 75. | 3185. | 3185. | 1750.0 | 0.0 | 3 | 0 | 15.0 | 30 | 150. | 0.45 | 3.00 |
| 29 | GUCC | 0 | 150. | 225. | 3185. | 0. | 1750.0 | 0.0 | 3 | 11 | 15.0 | 30 | 225. | 0.45 | 3.00 |
| 30 | GUD4 | 0 | 120. | 200. | 2600. | 2300. | 1750.0 | 0.0 | 3 | 11 | 5.0 | 30 | 225. | 0.42 | 1.31 |
| 31 | JOF1 | 0 | 150. | 250. | 2600. | 2300. | 0.0 | 1750.0 | 2 | 11 | 8.0 | 30 | 225. | 0.50 | 2.30 |
| 32 | JOF2 | 0 | 126. | 210. | 2600. | 2300. | 0.0 | 1750.0 | 2 | 11 | 8.0 | 30 | 225. | 0.50 | 2.30 |

FIXED SYSTEM (CONTD.)
SUMMARY DESCRIPTION OF THERMAL PLANTS IN YEAR 1986

| NO. | NAME | NO. OF SETS | MIN. LOAD MW | CAPA CITY MW | HEAT RATES KCAL/KWH BASE LOAD | HEAT RATES KCAL/KWH AVGE INCR | FUEL COSTS CENTS/ MILLION KCAL DMSTC | FUEL COSTS CENTS/ MILLION KCAL FORGN | FUEL TYPE | FAST SPIN RES % | FOR % | DAYS SCHL MAIN | MAIN CLAS MW | O&M (FIX) $/KWM | O&M (VAR) $/MWH |
|---|---|---|---|---|---|---|---|---|---|---|---|---|---|---|---|
| 33 | MNCL | 3 | 126. | 210. | 2600. | 2300. | 0.0 | 1750.0 | 2 | 11 | 8.0 | 30 | 225. | 0.50 | 2.30 |
| 34 | REPC | 1 | 3. | 9. | 3563. | 3290. | 1750.0 | 0.0 | 3 | 11 | 8.0 | 30 | 30. | 0.87 | 1.89 |
| 35 | MESC | 2 | 4. | 10. | 4400. | 3040. | 1750.0 | 0.0 | 3 | 11 | 8.0 | 30 | 30. | 0.69 | 2.42 |

FIXED SYSTEM
SUMMARY DESCRIPTION OF COMPOSITE HYDROELECTRIC PLANT TYPE HYD1
*** CAPACITY IN MW * ENERGY IN GWH ***
FIXED O&M COSTS : 1.590 $/KW-MONTH

| YEAR | PROJ | PER | HYDROCONDITION 1 PROB.: 0.28 CAPACITY BASE | PEAK | ENERGY | HYDROCONDITION 2 PROB.: 0.55 CAPACITY BASE | PEAK | ENERGY | HYDROCONDITION 3 PROB.: 0.17 CAPACITY BASE | PEAK | ENERGY |
|---|---|---|---|---|---|---|---|---|---|---|---|
| 1986 | 2 | 1 | 517. | 963. | 903. | 1193. | 579. | 2431. | 1651. | 269. | 2624. |
| | | 2 | 329. | 851. | 1213. | 1251. | 664. | 2710. | 1447. | 473. | 2328. |
| | | 3 | 518. | 802. | 1281. | 523. | 1262. | 1478. | 759. | 946. | 1390. |
| | | 4 | 378. | 842. | 1122. | 379. | 1189. | 999. | 436. | 1328. | 1347. |
| | | 5 | 571. | 367. | 835. | 444. | 741. | 846. | 1274. | 420. | 1951. |
| | | 6 | 443. | 632. | 915. | 697. | 498. | 1395. | 699. | 589. | 2337. |
| | | INST.CAP. | | 1750. | | | | | | | |
| | | TOTAL ENERGY | | | 6269. | | | 9859. | | | 11977. |

FIXED SYSTEM
SUMMARY DESCRIPTION OF COMPOSITE HYDROELECTRIC PLANT TYPE HYD2
*** CAPACITY IN MW * ENERGY IN GWH ***
FIXED O&M COSTS : 1.590 $/KW-MONTH

| YEAR | PROJ | PER | HYDROCONDITION 1 PROB.: 0.28 CAPACITY BASE | PEAK | ENERGY | HYDROCONDITION 2 PROB.: 0.55 CAPACITY BASE | PEAK | ENERGY | HYDROCONDITION 3 PROB.: 0.17 CAPACITY BASE | PEAK | ENERGY |
|---|---|---|---|---|---|---|---|---|---|---|---|
| 1986 | 4 | 1 | 225. | 390. | 823. | 693. | 345. | 1382. | 1086. | 132. | 1734. |
| | | 2 | 272. | 448. | 832. | 549. | 312. | 1224. | 760. | 217. | 1424. |
| | | 3 | 322. | 319. | 904. | 352. | 365. | 940. | 407. | 283. | 1007. |
| | | 4 | 298. | 278. | 800. | 348. | 259. | 858. | 426. | 251. | 977. |
| | | 5 | 272. | 343. | 713. | 510. | 294. | 1024. | 502. | 165. | 1442. |
| | | 6 | 299. | 353. | 885. | 782. | 283. | 1544. | 1115. | 103. | 1778. |
| | | INST.CAP. | 1156. | | | | | | | | |
| | | TOTAL ENERGY | | | 5006. | | | 6970. | | | 8362. |
| 1989 | 6 | 1 | 222. | 390. | 818. | 760. | 370. | 1513. | 1311. | 158. | 2064. |
| | | 2 | 269. | 448. | 877. | 557. | 319. | 1244. | 799. | 228. | 1497. |
| | | 3 | 319. | 319. | 899. | 349. | 365. | 935. | 403. | 283. | 1001. |
| | | 4 | 295. | 278. | 795. | 344. | 259. | 853. | 422. | 251. | 971. |
| | | 5 | 259. | 343. | 708. | 518. | 299. | 1042. | 1032. | 168. | 1636. |
| | | 6 | 294. | 354. | 878. | 862. | 311. | 1700. | 1329. | 107. | 2091. |
| | | INST.CAP. | 1345. | | | | | | | | |
| | | TOTAL ENERGY | | | 4976. | | | 7285. | | | 9260. |

FIXED SYSTEM
THERMAL ADDITICNS AND RETIREMENTS

NUMBER OF SETS ADDEC AND RETIREC(-)
1986 TO 2005

YEAR: 19.. (20J./2U..)

| NO. | NAME | 87 | 88 | 89 | 90 | 91 | 92 | 93 | 94 | 95 | 96 | 97 | 98 | 99 | 0 | 1 | 2 | 3 | 4 | 5 |
|---|---|---|---|---|---|---|---|---|---|---|---|---|---|---|---|---|---|---|---|---|
| 3 | MULT | | | | | -2 | | | | -2 | | | | | | | | | | |
| 4 | FOST | | | | | | | | | | | | -1 | -1 | | | | | | |
| 5 | FOGT | | | | | | | | | | | | | | | | -8 | | | |
| 6 | SHG1 | | | | | | -2 | | | | | | | | | | | | | |
| 7 | SHG2 | | | | | | | | | | -4 | | | | | | | | | |
| 8 | GUD1 | | | | | | | | | | | | | | | | | | | -2 |
| 10 | SKST | | | | | | | | | | -2 | | -2 | | | | | | | |
| 11 | HDST | | | | | -2 | | | | | | | | | | | | | | |
| 12 | HDOL | | | | | | | | | | -2 | | | | | | | | | |
| 13 | KOT1 | | | | | | | | | | -2 | | | | | | | | | |
| 14 | KOT2 | | | | | | | | | | | | | | | | | | | -2 |
| 15 | QTST | | | | | | | | | -2 | | | | | | | | | | |
| 16 | QTG1 | | | | | | | | | | | | -1 | | | | | | | |
| 17 | QTG2 | | | | | | | -1 | | | | | | | | | | | | |
| 18 | QTG3 | | | | | | | | | | | | | | | -1 | | | | |
| 21 | KTP1 | | | | | | | | | | | -2 | | | | | | | | |
| 22 | KTP2 | | | | | | | | | | | | | | | -1 | | | | |
| 25 | KWWS | | | | | -2 | | | | | | | | | | | | | | |
| 27 | KAGT | 4 | | | | | | | | | | | | | | | | | | |
| 28 | GUGT | 4 | -4 | | | | | | | | | | | | | | | | | |
| 29 | GUCC | | 2 | | | | | | | | | | | | | | | | | |
| 30 | GUD4 | 1 | | | | | | | | | | | | | | | | | | |
| 31 | JOF1 | | | 1 | | | | | | | | | | | | | | | | |
| 33 | MNCL | | | 1 | 2 | | | | | | | | | | | | | | | |
| 34 | REPC | | | | | | -1 | | | | | | | | | | | | | |
| 35 | MESC | | | | | | -2 | | | | | | | | | | | | | |

FIXED SYSTEM
SUMMARY OF INSTALLED CAPACITIES
(NOMINAL CAPACITIES (MW))

| | HYDROELECTRIC | | | | THERMAL | | | | | TOTAL |
|---|---|---|---|---|---|---|---|---|---|---|
| | HYD1 | | HYD2 | | FUEL TYPE | | | | | |
| YEAR | PR. | CAP | PR. | CAP | 0 CCAL | 1 HSDP | 2 FOIL | 3 GASF | 4 NUCL | |
| 1986 | 2 | 1750. | 4 | 1156. | 16. | 515. | 1228. | 665. | 130. | 5460. |
| 1987 | | | | | 16. | 915. | 1228. | 1165. | 130. | 6360. |
| 1988 | | | | | 16. | 915. | 1228. | 1315. | 130. | 6510. |
| 1989 | 2 | 1750. | 6 | 1345. | 16. | 915. | 1688. | 1315. | 130. | 7159. |
| 1990 | | | | | 16. | 915. | 2108. | 1315. | 130. | 7579. |
| 1991 | | | | | 16. | 915. | 1922. | 1301. | 130. | 7379. |
| 1992 | | | | | 16. | 895. | 1922. | 1272. | 130. | 7330. |
| 1993 | | | | | 16. | 885. | 1922. | 1272. | 130. | 7320. |
| 1995 | | | | | 0. | 885. | 1802. | 1272. | 130. | 7184. |
| 1996 | | | | | 0. | 833. | 1802. | 1204. | 130. | 7064. |
| 1997 | | | | | 0. | 833. | 1670. | 1204. | 130. | 6932. |
| 1998 | | | | | 0. | 828. | 1610. | 1180. | 130. | 6843. |
| 1999 | | | | | 0. | 828. | 1550. | 1180. | 130. | 6783. |
| 2001 | | | | | 0. | 808. | 1425. | 1180. | 130. | 6638. |
| 2002 | | | | | 0. | 608. | 1425. | 1180. | 130. | 6438. |
| 2005 | | | | | 0. | 608. | 1425. | 910. | 130. | 6168. |

VARIABLE SYSTEM
SUMMARY DESCRIPTION OF THERMAL PLANTS

| NO. | NAME | NO. OF SETS | MIN. LOAD MW | CAPA CITY MW | HEAT RATES KCAL/KWH BASE LOAD | HEAT RATES KCAL/KWH AVGE INCR | FUEL COSTS CENTS/ MILLION KCAL DMSTC | FUEL COSTS CENTS/ MILLION KCAL FORGN | FUEL TYPE | FAST SPIN RES % | FOR % | DAYS SCHL MAIN | MAIN CLAS MW | C&M (FIX) $/KWM | O&M (VAR) $/MWH |
|---|---|---|---|---|---|---|---|---|---|---|---|---|---|---|---|
| 1 | PPR2 | 0 | 85. | 210. | 2657. | 2316. | 0.0 | 1750.0 | 2 | 11 | 8.0 | 35 | 225. | 0.50 | 2.30 |
| 2 | MCTH | 0 | 180. | 300. | 2538. | 2170. | 0.0 | 1750.0 | 2 | 11 | 10.0 | 40 | 300. | 0.50 | 2.30 |
| 3 | LAKH | 0 | 180. | 300. | 2920. | 2302. | 850.0 | 0.0 | 0 | 11 | 11.0 | 40 | 300. | 0.87 | 2.30 |
| 4 | LAK2 | 0 | 180. | 300. | 2920. | 2302. | 850.0 | 0.0 | 0 | 11 | 11.0 | 40 | 300. | 0.87 | 2.30 |
| 5 | DUKI | 0 | 60. | 100. | 3029. | 2387. | 850.0 | 0.0 | 0 | 11 | 6.0 | 29 | 150. | 0.87 | 2.30 |
| 6 | CLIM | 0 | 400. | 600. | 2628. | 2046. | 0.0 | 1100.0 | 0 | 11 | 17.0 | 40 | 600. | 0.78 | 2.30 |
| 7 | ICFG | 0 | 400. | 600. | 2738. | 2142. | 0.0 | 1100.0 | 0 | 11 | 19.5 | 52 | 600. | 1.56 | 4.60 |
| 8 | NUKE | 0 | 450. | 900. | 2760. | 2480. | 0.0 | 210.0 | 4 | 11 | 22.0 | 61 | 900. | 1.00 | 2.50 |
| 9 | V-GT | 0 | 100. | 100. | 3185. | 3185. | 0.0 | 2625.0 | 1 | 0 | 20.0 | 12 | 150. | 0.45 | 3.00 |

VARIABLE SYSTEM
SUMMARY DESCRIPTION OF COMPOSITE HYDROELECTRIC PLANT TYPE HYD1
*** CAPACITY IN MW * ENERGY IN GWH ***
FIXED C&M COSTS : 1.590 $/KW-MONTH

| YEAR | PROJ | PER | HYDROCONDITION 1 PROB.: 0.28 CAPACITY BASE | PEAK | ENERGY | HYDROCONDITION 2 PROB.: 0.55 CAPACITY BASE | PEAK | ENERGY | HYDROCONDITION 3 PROB.: 0.17 CAPACITY BASE | PEAK | ENERGY |
|---|---|---|---|---|---|---|---|---|---|---|---|
| 1990 | 1 | 1 | 51. | 249. | 100. | 270. | 90. | 500. | 338. | 73. | 600. |
| | | 2 | 12. | 288. | 30. | 12. | 399. | 30. | 12. | 399. | 30. |
| | | 3 | 0. | 0. | 0. | 14. | 373. | 55. | 14. | 373. | 55. |
| | | 4 | 0. | 0. | 0. | 8. | 316. | 27. | 8. | 316. | 27. |
| | | 5 | 0. | 0. | 0. | 10. | 181. | 30. | 10. | 181. | 30. |
| | | 6 | 32. | 138. | 75. | 32. | 185. | 75. | 32. | 185. | 75. |
| | | INST.CAP. | | 432. | | | | | | | |
| | | TOTAL ENERGY | | | 205. | | | 717. | | | 817. |
| 1990 | 2 | 1 | 103. | 497. | 200. | 540. | 180. | 1000. | 677. | 145. | 1200. |
| | | 2 | 23. | 577. | 60. | 23. | 799. | 60. | 23. | 799. | 60. |
| | | 3 | 0. | 0. | 0. | 27. | 747. | 110. | 27. | 747. | 110. |
| | | 4 | 0. | 0. | 0. | 16. | 632. | 54. | 16. | 632. | 54. |
| | | 5 | 0. | 0. | 0. | 19. | 363. | 60. | 19. | 363. | 60. |
| | | 6 | 64. | 276. | 150. | 64. | 370. | 150. | 64. | 370. | 150. |
| | | INST.CAP. | | 864. | | | | | | | |
| | | TOTAL ENERGY | | | 411. | | | 1434. | | | 1634. |
| 1991 | 3 | 1 | 154. | 746. | 300. | 810. | 270. | 1500. | 1015. | 218. | 1800. |
| | | 2 | 35. | 865. | 90. | 35. | 1198. | 90. | 35. | 1198. | 90. |
| | | 3 | 0. | 0. | 0. | 41. | 1120. | 165. | 41. | 1120. | 165. |
| | | 4 | 0. | 0. | 0. | 25. | 947. | 81. | 25. | 947. | 81. |
| | | 5 | 0. | 0. | 0. | 29. | 544. | 90. | 29. | 544. | 90. |
| | | 6 | 97. | 413. | 225. | 97. | 554. | 225. | 97. | 554. | 225. |
| | | INST.CAP. | | 1296. | | | | | | | |
| | | TOTAL ENERGY | | | 616. | | | 2151. | | | 2451. |

VARIABLE SYSTEM (CONTD.)

SUMMARY DESCRIPTION OF COMPOSITE HYDROELECTRIC PLANT TYPE HYD1

*** CAPACITY IN MW * ENERGY IN GWH ***

FIXED O&M COSTS : 1.590 $/KW-MONTH

| YEAR | PROJ | PER | HYDROCONDITION 1 PROB.: 0.28 CAPACITY BASE | PEAK | ENERGY | HYDROCONDITION 2 PROB.: 0.55 CAPACITY BASE | PEAK | ENERGY | HYDROCONDITION 3 PROB.: 0.17 CAPACITY BASE | PEAK | ENERGY |
|---|---|---|---|---|---|---|---|---|---|---|---|
| 1991 | 4 | 1 | 205. | 995. | 400. | 1079. | 361. | 2000. | 1353. | 291. | 2400. |
| | | 2 | 47. | 1153. | 120. | 47. | 1597. | 120. | 47. | 1597. | 120. |
| | | 3 | 0. | 0. | 0. | 55. | 1493. | 220. | 55. | 1493. | 220. |
| | | 4 | 0. | 0. | 0. | 33. | 1263. | 108. | 33. | 1263. | 108. |
| | | 5 | 0. | 0. | 0. | 38. | 726. | 120. | 38. | 726. | 120. |
| | | 6 | 129. | 551. | 300. | 129. | 739. | 300. | 129. | 739. | 300. |
| | | INST.CAP. | | 1728. | | | | | | | |
| | | TOTAL ENERGY | | | 821. | | | 2868. | | | 3268. |
| 1994 | 5 | 1 | 257. | 1243. | 500. | 1349. | 451. | 2500. | 1692. | 363. | 3000. |
| | | 2 | 58. | 1442. | 150. | 58. | 1997. | 150. | 58. | 1997. | 150. |
| | | 3 | 0. | 1. | 1. | 68. | 1867. | 275. | 68. | 1867. | 275. |
| | | 4 | 0. | 1. | 1. | 41. | 1579. | 135. | 41. | 1579. | 135. |
| | | 5 | 0. | 1. | 1. | 48. | 907. | 150. | 48. | 907. | 150. |
| | | 6 | 161. | 689. | 375. | 161. | 924. | 375. | 161. | 924. | 375. |
| | | INST.CAP. | | 2160. | | | | | | | |
| | | TOTAL ENERGY | | | 1027. | | | 3585. | | | 4085. |
| 1994 | 6 | 1 | 308. | 1492. | 600. | 1619. | 541. | 3000. | 2030. | 436. | 3600. |
| | | 2 | 70. | 1730. | 180. | 70. | 2396. | 180. | 70. | 2396. | 180. |
| | | 3 | 0. | 1. | 1. | 82. | 2240. | 330. | 82. | 2240. | 330. |
| | | 4 | 0. | 1. | 1. | 49. | 1895. | 162. | 49. | 1895. | 162. |
| | | 5 | 0. | 1. | 1. | 58. | 1088. | 180. | 58. | 1088. | 180. |
| | | 6 | 193. | 827. | 450. | 193. | 1109. | 450. | 193. | 1109. | 450. |
| | | INST.CAP. | | 2592. | | | | | | | |
| | | TOTAL ENERGY | | | 1232. | | | 4302. | | | 4902. |



142

VARIABLE SYSTEM (CONTD.)
SUMMARY DESCRIPTION OF COMPOSITE HYDROELECTRIC PLANT TYPE HYD1
*** CAPACITY IN MW * ENERGY IN GWH ***
FIXED O&M COSTS : 1.590 $/KW-MONTH

| YEAR | PROJ | PER | HYDROCONDITION 1 PROB.: 0.28 CAPACITY BASE | CAPACITY PEAK | ENERGY | HYDROCONDITION 2 PROB.: 0.55 CAPACITY BASE | CAPACITY PEAK | ENERGY | HYDROCONDITION 3 PROB.: 0.17 CAPACITY BASE | CAPACITY PEAK | ENERGY |
|---|---|---|---|---|---|---|---|---|---|---|---|
| 1994 | 7 | 1 | 432. | 1577. | 871. | 1773. | 669. | 3380. | 2188. | 566. | 4013. |
| | | 2 | 132. | 1968. | 358. | 218. | 2548. | 437. | 218. | 2548. | 494. |
| | | 3 | 55. | 171. | 82. | 154. | 2468. | 436. | 159. | 2463. | 459. |
| | | 4 | 74. | 152. | 142. | 123. | 2121. | 360. | 129. | 2115. | 404. |
| | | 5 | 74. | 130. | 167. | 156. | 1261. | 413. | 160. | 1258. | 464. |
| | | 6 | 286. | 910. | 706. | 329. | 1224. | 815. | 330. | 1272. | 881. |
| | | INST.CAP. | 2892. | | | | | | | | |
| | | TOTAL ENERGY | | | 2325. | | | 5841. | | | 6715. |
| 1994 | 8 | 1 | 555. | 1663. | 1142. | 1927. | 797. | 3760. | 2347. | 695. | 4426. |
| | | 2 | 193. | 2207. | 536. | 366. | 2700. | 694. | 366. | 2700. | 808. |
| | | 3 | 110. | 341. | 163. | 226. | 2696. | 542. | 236. | 2686. | 588. |
| | | 4 | 148. | 303. | 283. | 197. | 2347. | 558. | 208. | 2336. | 646. |
| | | 5 | 148. | 259. | 333. | 255. | 1433. | 646. | 263. | 1427. | 748. |
| | | 6 | 378. | 994. | 962. | 464. | 1340. | 1180. | 467. | 1435. | 1312. |
| | | INST.CAP. | 3192. | | | | | | | | |
| | | TOTAL ENERGY | | | 3418. | | | 7380. | | | 8528. |
| 1994 | 9 | 1 | 578. | 1749. | 1413. | 2082. | 924. | 4140. | 2505. | 825. | 4839. |
| | | 2 | 255. | 2445. | 714. | 514. | 2952. | 951. | 514. | 2852. | 1122. |
| | | 3 | 164. | 511. | 244. | 298. | 2924. | 648. | 312. | 2910. | 717. |
| | | 4 | 222. | 454. | 424. | 271. | 2573. | 756. | 288. | 2556. | 888. |
| | | 5 | 222. | 388. | 499. | 353. | 1606. | 879. | 366. | 1596. | 1032. |
| | | 6 | 471. | 1077. | 1218. | 600. | 1455. | 1545. | 604. | 1598. | 1743. |
| | | INST.CAP. | 3492. | | | | | | | | |
| | | TOTAL ENERGY | | | 4511. | | | 8919. | | | 10341. |



142

VARIABLE SYSTEM (CONTD.)
SUMMARY DESCRIPTION OF COMPOSITE HYDROELECTRIC PLANT TYPE HYD1
*** CAPACITY IN MW * ENERGY IN GWH ***
FIXED O&M COSTS : 1.590 $/KW-MONTH

| YEAR | PROJ | PER | HYDROCONDITION 1 PROB.: 0.28 CAPACITY BASE | PEAK | ENERGY | HYDROCONDITION 2 PROB.: 0.55 CAPACITY BASE | PEAK | ENERGY | HYDROCONDITION 3 PROB.: 0.17 CAPACITY BASE | PEAK | ENERGY |
|---|---|---|---|---|---|---|---|---|---|---|---|
| 1995 | 10 | 1 | 301. | 1835. | 1684. | 2236. | 1052. | 4520. | 2663. | 955. | 5252. |
| | | 2 | 316. | 2684. | 892. | 662. | 3004. | 1208. | 662. | 3004. | 1436. |
| | | 3 | 219. | 681. | 325. | 370. | 3152. | 754. | 389. | 3133. | 846. |
| | | 4 | 296. | 605. | 565. | 345. | 2799. | 954. | 367. | 2777. | 1130. |
| | | 5 | 296. | 517. | 665. | 452. | 1778. | 1112. | 468. | 1766. | 1316. |
| | | 6 | 563. | 1161. | 1474. | 736. | 1570. | 1910. | 741. | 1761. | 2174. |
| | | INST.CAP. | | 3792. | | | | | | | |
| | | TOTAL ENERGY | | | 5604. | | | 10458. | | | 12154. |
| 1995 | 11 | 1 | 925. | 1920. | 1955. | 2390. | 1180. | 4900. | 2821. | 1085. | 5665. |
| | | 2 | 378. | 2922. | 1070. | 810. | 3156. | 1465. | 810. | 3156. | 1750. |
| | | 3 | 274. | 852. | 406. | 442. | 3380. | 860. | 466. | 3356. | 975. |
| | | 4 | 370. | 756. | 706. | 419. | 3025. | 1152. | 447. | 2997. | 1372. |
| | | 5 | 370. | 646. | 831. | 551. | 1950. | 1345. | 571. | 1935. | 1600. |
| | | 6 | 635. | 1245. | 1730. | 871. | 1686. | 2275. | 878. | 1924. | 2605. |
| | | INST.CAP. | | 4092. | | | | | | | |
| | | TOTAL ENERGY | | | 6697. | | | 11997. | | | 13967. |
| 1995 | 12 | 1 | 976. | 2169. | 2055. | 2660. | 1270. | 5400. | 3160. | 1157. | 6265. |
| | | 2 | 390. | 3210. | 1100. | 821. | 3556. | 1495. | 821. | 3556. | 1780. |
| | | 3 | 274. | 852. | 406. | 455. | 3754. | 915. | 479. | 3730. | 1030. |
| | | 4 | 370. | 756. | 706. | 427. | 3341. | 1179. | 455. | 3313. | 1399. |
| | | 5 | 370. | 646. | 831. | 560. | 2132. | 1375. | 581. | 2116. | 1630. |
| | | 6 | 588. | 1382. | 1805. | 903. | 1871. | 2350. | 910. | 2109. | 2680. |
| | | INST.CAP. | | 4524. | | | | | | | |
| | | TOTAL ENERGY | | | 6902. | | | 12714. | | | 14784. |



144

VARIABLE SYSTEM (CONTD.)

SUMMARY DESCRIPTION OF COMPOSITE HYDROELECTRIC PLANT TYPE HYD1

*** CAPACITY IN MW * ENERGY IN GWH ***

FIXED O&M COSTS : 1.590 $/KW-MONTH

| YEAR | PROJ | PER | HYDROCONDITION 1 PROB.: 0.28 CAPACITY BASE | PEAK | ENERGY | HYDROCONDITION 2 PROB.: 0.55 CAPACITY BASE | PEAK | ENERGY | HYDROCONDITION 3 PROB.: 0.17 CAPACITY BASE | PEAK | ENERGY |
|---|---|---|---|---|---|---|---|---|---|---|---|
| 1996 | 13 | 1 | 1099. | 2255. | 2326. | 2814. | 1398. | 5780. | 3318. | 1287. | 6678. |
| | | 2 | 451. | 3449. | 1278. | 969. | 3708. | 1752. | 969. | 3708. | 2094. |
| | | 3 | 329. | 1022. | 487. | 527. | 3982. | 1021. | 556. | 3953. | 1159. |
| | | 4 | 444. | 907. | 847. | 501. | 3567. | 1377. | 534. | 3534. | 1641. |
| | | 5 | 444. | 775. | 997. | 659. | 2304. | 1608. | 684. | 2285. | 1914. |
| | | 6 | 780. | 1466. | 2061. | 1039. | 1986. | 2715. | 1047. | 2272. | 3111. |
| | | INST.CAP. | | 4924. | | | | | | | |
| | | TOTAL ENERGY | | | 7995. | | | 14253. | | | 16597. |
| 1996 | 14 | 1 | 1223. | 2340. | 2597. | 2968. | 1526. | 6160. | 3476. | 1417. | 7091. |
| | | 2 | 313. | 3687. | 1456. | 1117. | 3860. | 2009. | 1117. | 3860. | 2408. |
| | | 3 | 344. | 1192. | 568. | 599. | 4210. | 1127. | 633. | 4176. | 1288. |
| | | 4 | 323. | 1058. | 988. | 575. | 3753. | 1575. | 614. | 3754. | 1883. |
| | | 5 | 519. | 904. | 1163. | 758. | 2476. | 1841. | 786. | 2455. | 2158. |
| | | 6 | 873. | 1549. | 2317. | 1175. | 2101. | 3080. | 1184. | 2435. | 3542. |
| | | INST.CAP. | | 5124. | | | | | | | |
| | | TOTAL ENERGY | | | 9088. | | | 15792. | | | 18410. |
| 1997 | 15 | 1 | 1346. | 2426. | 2868. | 3122. | 1554. | 6540. | 3634. | 1547. | 7504. |
| | | 2 | 375. | 3925. | 1634. | 1265. | 4012. | 2266. | 1265. | 4012. | 2722. |
| | | 3 | 438. | 1362. | 649. | 671. | 4438. | 1233. | 710. | 4399. | 1417. |
| | | 4 | 392. | 1209. | 1129. | 649. | 4019. | 1773. | 693. | 3975. | 2125. |
| | | 5 | 392. | 1033. | 1329. | 856. | 2649. | 2074. | 889. | 2524. | 2482. |
| | | 6 | 955. | 1633. | 2573. | 1310. | 2217. | 3445. | 1321. | 2598. | 3973. |
| | | INST.CAP. | | 5424. | | | | | | | |
| | | TOTAL ENERGY | | | 10181. | | | 17331. | | | 20223. |

VARIABLE SYSTEM (CONTD.)

SUMMARY DESCRIPTION OF COMPOSITE HYDROELECTRIC PLANT TYPE HYD1

*** CAPACITY IN MW * ENERGY IN GWH ***

FIXED O&M COSTS : 1.590 $/KW-MONTH

| YEAR | PROJ | PER | HYDROCONDITION 1 PROB.: 0.28 CAPACITY BASE | PEAK | ENERGY | HYDROCONDITION 2 PROB.: 0.55 CAPACITY BASE | PEAK | ENERGY | HYDROCONDITION 3 PROB.: 0.17 CAPACITY BASE | PEAK | ENERGY |
|---|---|---|---|---|---|---|---|---|---|---|---|
| 1997 | 16 | 1 | 1435. | 2545. | 3063. | 3233. | 1824. | 6815. | 3748. | 1720. | 7802. |
| | | 2 | 619. | 4181. | 1763. | 1372. | 4205. | 2452. | 1373. | 4204. | 2951. |
| | | 3 | 477. | 1548. | 707. | 723. | 4686. | 1309. | 764. | 4645. | 1509. |
| | | 4 | 573. | 1383. | 1230. | 702. | 4266. | 1916. | 750. | 4218. | 2259. |
| | | 5 | 540. | 1190. | 1448. | 927. | 2853. | 2242. | 963. | 2821. | 2687. |
| | | 6 | 1032. | 1743. | 2758. | 1408. | 2371. | 3709. | 1420. | 2799. | 4285. |
| | | INST.CAP. | 5724. | | | | | | | | |
| | | TOTAL ENERGY | | | 10968. | | | 18443. | | | 21533. |
| 1998 | 17 | 1 | 1524. | 2664. | 3258. | 3344. | 1994. | 7090. | 3862. | 1893. | 8100. |
| | | 2 | 654. | 4436. | 1832. | 1479. | 4398. | 2638. | 1480. | 4397. | 3180. |
| | | 3 | 516. | 1734. | 765. | 774. | 4935. | 1385. | 819. | 4890. | 1601. |
| | | 4 | 693. | 1556. | 1331. | 755. | 4513. | 2059. | 807. | 4461. | 2473. |
| | | 5 | 689. | 1348. | 1567. | 997. | 3058. | 2410. | 1037. | 3018. | 2892. |
| | | 6 | 1098. | 1854. | 2943. | 1506. | 2525. | 3973. | 1518. | 3001. | 4597. |
| | | INST.CAP. | 6024. | | | | | | | | |
| | | TOTAL ENERGY | | | 11755. | | | 19555. | | | 22843. |
| 1998 | 18 | 1 | 1513. | 2783. | 3453. | 3455. | 2164. | 7365. | 3975. | 2067. | 8358. |
| | | 2 | 708. | 4692. | 2021. | 1586. | 4591. | 2824. | 1588. | 4589. | 3409. |
| | | 3 | 555. | 1920. | 823. | 825. | 5184. | 1461. | 874. | 5135. | 1693. |
| | | 4 | 746. | 1730. | 1432. | 808. | 4760. | 2202. | 864. | 4704. | 2647. |
| | | 5 | 738. | 1505. | 1686. | 1068. | 3262. | 2578. | 1111. | 3215. | 3097. |
| | | 6 | 1164. | 1965. | 3128. | 1604. | 2679. | 4237. | 1617. | 3202. | 4909. |
| | | INST.CAP. | 6324. | | | | | | | | |
| | | TOTAL ENERGY | | | 12542. | | | 20667. | | | 24153. |



146

VARIABLE SYSTEM (CONTD.)

SUMMARY DESCRIPTION OF COMPOSITE HYDROELECTRIC PLANT TYPE HYD1

*** CAPACITY IN MW * ENERGY IN GWH ***

FIXED O&M COSTS : 1.590 $/KW-MONTH

| YEAR | PROJ | PER | HYDROCONDITION 1 PROB.: 0.28 CAPACITY BASE | PEAK | ENERGY | HYDROCONDITION 2 PROB.: 0.55 CAPACITY BASE | PEAK | ENERGY | HYDROCONDITION 3 PROB.: 0.17 CAPACITY BASE | PEAK | ENERGY |
|---|---|---|---|---|---|---|---|---|---|---|---|
| 1998 | 19 | 1 | 1639. | 3214. | 3897. | 3963. | 2324. | 8334. | 4472. | 2360. | 9265. |
| | | 2 | 730. | 5061. | 2356. | 1801. | 5139. | 3307. | 2026. | 4982. | 4163. |
| | | 3 | 730. | 2109. | 1337. | 966. | 5321. | 1851. | 1127. | 5674. | 2247. |
| | | 4 | 900. | 1899. | 1383. | 953. | 5390. | 2585. | 1090. | 5132. | 3187. |
| | | 5 | 851. | 1760. | 2018. | 1285. | 3874. | 3004. | 1513. | 3667. | 3861. |
| | | 6 | 1251. | 2196. | 3473. | 2084. | 3022. | 5145. | 2114. | 3559. | 5790. |
| | | INST.CAP. | 7178. | | | | | | | | |
| | | TOTAL ENERGY | | | 14943. | | | 24226. | | | 28513. |
| 1999 | 20 | 1 | 1778. | 3333. | 4092. | 4074. | 2494. | 8609. | 4586. | 2533. | 9563. |
| | | 2 | 325. | 5316. | 2465. | 1908. | 5332. | 3493. | 2134. | 5174. | 4392. |
| | | 3 | 759. | 2295. | 1395. | 1017. | 6070. | 1927. | 1182. | 5919. | 2339. |
| | | 4 | 931. | 2072. | 1984. | 1005. | 5638. | 2728. | 1147. | 5375. | 3361. |
| | | 5 | 399. | 1917. | 2137. | 1355. | 4079. | 3172. | 1587. | 3864. | 4066. |
| | | 6 | 1327. | 2307. | 3658. | 2182. | 3176. | 5409. | 2212. | 3761. | 6102. |
| | | INST.CAP. | 7478. | | | | | | | | |
| | | TOTAL ENERGY | | | 15730. | | | 25338. | | | 29823. |
| 1999 | 21 | 1 | 1354. | 3764. | 4536. | 4582. | 2654. | 9578. | 5082. | 2827. | 10430. |
| | | 2 | 837. | 5685. | 2780. | 2124. | 5879. | 3976. | 2572. | 5567. | 5146. |
| | | 3 | 944. | 2483. | 1909. | 1158. | 6707. | 2317. | 1436. | 6457. | 2053. |
| | | 4 | 1105. | 2241. | 2435. | 1151. | 6267. | 3111. | 1373. | 5803. | 3901. |
| | | 5 | 1012. | 2172. | 2469. | 1573. | 4690. | 3598. | 1989. | 4316. | 4830. |
| | | 6 | 1424. | 2538. | 4003. | 2661. | 3520. | 6317. | 2709. | 4118. | 6983. |
| | | INST.CAP. | 8332. | | | | | | | | |
| | | TOTAL ENERGY | | | 18131. | | | 28897. | | | 34183. |

VARIABLE SYSTEM (CONTD.)

SUMMARY DESCRIPTION OF COMPOSITE HYDROELECTRIC PLANT TYPE HYD1

*** CAPACITY IN MW * ENERGY IN GWH ***

FIXED O&M COSTS : 1.590 $/KW-MONTH

| YEAR | PROJ | PER | HYDROCONDITION 1 PROB.: 0.28 CAPACITY BASE | PEAK | ENERGY | HYDROCONDITION 2 PROB.: 0.55 CAPACITY BASE | PEAK | ENERGY | HYDROCONDITION 3 PROB.: 0.17 CAPACITY BASE | PEAK | ENERGY |
|---|---|---|---|---|---|---|---|---|---|---|---|
| 2001 | 22 | 1 | 1030. | 4195. | 4980. | 5090. | 2814. | 10547. | 5579. | 3120. | 11297. |
| | | 2 | 968. | 6054. | 3095. | 2340. | 6426. | 4459. | 3010. | 5960. | 5900. |
| | | 3 | 1118. | 2671. | 2423. | 1298. | 7345. | 2707. | 1689. | 6996. | 3447. |
| | | 4 | 1250. | 2410. | 2886. | 1296. | 6897. | 3494. | 1599. | 6231. | 4441. |
| | | 5 | 1125. | 2427. | 2801. | 1790. | 5302. | 4024. | 2391. | 4768. | 5594. |
| | | 6 | 1521. | 2769. | 4348. | 3140. | 3864. | 7225. | 3205. | 4476. | 7864. |
| | | INST.CAP. | 9186. | | | | | | | | |
| | | TOTAL ENERGY | | | 20532. | | | 32456. | | | 38543. |
| 2002 | 23 | 1 | 2006. | 4626. | 5424. | 5599. | 2973. | 11516. | 6075. | 3414. | 12164. |
| | | 2 | 1040. | 6424. | 3410. | 2555. | 6974. | 4942. | 3449. | 6352. | 6654. |
| | | 3 | 1293. | 2860. | 2937. | 1438. | 7983. | 3097. | 1942. | 7535. | 4001. |
| | | 4 | 1414. | 2579. | 3337. | 1441. | 7527. | 3877. | 1825. | 6659. | 4981. |
| | | 5 | 1238. | 2682. | 3133. | 2007. | 5914. | 4450. | 2793. | 5220. | 6358. |
| | | 6 | 1617. | 3001. | 4693. | 3620. | 4207. | 8133. | 3702. | 4833. | 8745. |
| | | INST.CAP. | 10040. | | | | | | | | |
| | | TOTAL ENERGY | | | 22933. | | | 25015. | | | 42903. |
| 2003 | 24 | 1 | 2391. | 5173. | 6116. | 6250. | 3254. | 12640. | 6732. | 3689. | 13296. |
| | | 2 | 1307. | 7089. | 3901. | 2994. | 7467. | 5716. | 3981. | 6752. | 7575. |
| | | 3 | 1769. | 3335. | 3738. | 1693. | 8660. | 3571. | 2249. | 8160. | 4565. |
| | | 4 | 1836. | 3119. | 4040. | 1713. | 8187. | 4381. | 2152. | 7264. | 5581. |
| | | 5 | 1520. | 3333. | 3650. | 2259. | 6594. | 4919. | 3264. | 5681. | 7182. |
| | | 6 | 1910. | 3640. | 5230. | 4116. | 4643. | 8996. | 4262. | 5205. | 9712. |
| | | INST.CAP. | 10972. | | | | | | | | |
| | | TOTAL ENERGY | | | 26674. | | | 40223. | | | 47911. |

VARIABLE SYSTEM (CONTD.)

SUMMARY DESCRIPTION OF COMPOSITE HYDROELECTRIC PLANT TYPE HYDI

*** CAPACITY IN MW * ENERGY IN GWH ***

FIXED O&M COSTS : 1.590 $/KW-MONTH

| YEAR | PROJ | PER | HYDROCONDITION 1 PROB.: 0.28 CAPACITY BASE | CAPACITY PEAK | ENERGY | HYDROCONDITION 2 PROB.: 0.55 CAPACITY BASE | CAPACITY PEAK | ENERGY | HYDROCONDITION 3 PROB.: 0.17 CAPACITY BASE | CAPACITY PEAK | ENERGY |
|---|---|---|---|---|---|---|---|---|---|---|---|
| 2005 | 25 | 1 | 2776. | 5720. | 6808. | 6900. | 3536. | 13764. | 7388. | 3965. | 14428. |
| | | 2 | 1573. | 7755. | 4392. | 3433. | 7960. | 6490. | 4513. | 7152. | 8456. |
| | | 3 | 2206. | 3811. | 4539. | 1948. | 9337. | 4045. | 2556. | 8785. | 5129. |
| | | 4 | 2198. | 3658. | 4743. | 1986. | 8846. | 4885. | 2480. | 7868. | 6181. |
| | | 5 | 1802. | 3983. | 4167. | 2511. | 7274. | 5388. | 3735. | 6142. | 8006. |
| | | 6 | 2203. | 4279. | 5767. | 4612. | 5079. | 9859. | 4821. | 5578. | 10679. |
| | | INST.CAP. | 11904. | | | | | | | | |
| | | TOTAL ENERGY | | | 30415. | | | 44431. | | | 52919. |

VARIABLE SYSTEM
SUMMARY DESCRIPTION OF COMPOSITE HYDROELECTRIC PLANT TYPE HYD2
*** CAPACITY IN MW * ENERGY IN GWH ***
FIXED O&M COSTS : 1.590 $/KW-MONTH

| YEAR | PROJ | PER | HYDROCONDITION 1 PROB.: 0.28 CAPACITY BASE | PEAK | ENERGY | HYDROCONDITION 2 PROB.: 0.55 CAPACITY BASE | PEAK | ENERGY | HYDROCONDITION 3 PROB.: 0.17 CAPACITY BASE | PEAK | ENERGY |
|---|---|---|---|---|---|---|---|---|---|---|---|
| 1992 | 1 | 1 | 159. | 0. | 232. | 188. | 0. | 274. | 221. | 0. | 323. |
| | | 2 | 182. | 0. | 266. | 215. | 0. | 314. | 254. | 0. | 371. |
| | | 3 | 95. | 0. | 139. | 112. | 0. | 164. | 133. | 0. | 194. |
| | | 4 | 84. | 0. | 123. | 99. | 0. | 145. | 117. | 0. | 171. |
| | | 5 | 126. | 0. | 184. | 149. | 0. | 217. | 175. | 0. | 256. |
| | | 6 | 205. | 0. | 299. | 242. | 0. | 353. | 262. | 0. | 382. |
| | | INST.CAP. | 262. | | | | | | | | |
| | | TOTAL ENERGY | | | 1243. | | | 1467. | | | 1697. |
| 1995 | 2 | 1 | 212. | 0. | 309. | 250. | 0. | 365. | 295. | 0. | 430. |
| | | 2 | 249. | 0. | 363. | 294. | 0. | 429. | 347. | 0. | 507. |
| | | 3 | 170. | 0. | 248. | 201. | 0. | 293. | 237. | 0. | 346. |
| | | 4 | 136. | 0. | 199. | 161. | 0. | 235. | 190. | 0. | 277. |
| | | 5 | 192. | 0. | 280. | 226. | 0. | 330. | 266. | 0. | 389. |
| | | 6 | 289. | 0. | 422. | 341. | 0. | 498. | 371. | 0. | 542. |
| | | INST.CAP. | 372. | | | | | | | | |
| | | TOTAL ENERGY | | | 1821. | | | 2150. | | | 2491. |
| 1997 | 3 | 1 | 330. | 0. | 482. | 390. | 0. | 570. | 460. | 0. | 672. |
| | | 2 | 399. | 0. | 582. | 471. | 0. | 688. | 557. | 0. | 813. |
| | | 3 | 338. | 0. | 494. | 400. | 0. | 584. | 472. | 0. | 689. |
| | | 4 | 231. | 0. | 337. | 299. | 0. | 437. | 353. | 0. | 515. |
| | | 5 | 340. | 0. | 496. | 401. | 0. | 585. | 473. | 0. | 690. |
| | | 6 | 442. | 0. | 646. | 565. | 0. | 825. | 618. | 0. | 902. |
| | | INST.CAP. | 619. | | | | | | | | |
| | | TOTAL ENERGY | | | 3037. | | | 3689. | | | 4281. |



158

C O N G E N
CONSTRAINTS ON CONFIGURATIONS GENERATED
CON: NUMBER OF CONFIGURATIONS
MINIMUM
MAXIMUM

| YEAR | CON | RES. MAR-GIN | PERMITTED EXTREME CONFIGURATIONS OF ALTERNATIVES PPR2 | MCTH | LAKH | LAK2 | DUKI | CLIM | ICFG | NUKE | V-GT | HYD1 | HYD2 |
|---|---|---|---|---|---|---|---|---|---|---|---|---|---|
| 1986 | 1 | 0 | 0 | 0 | 0 | 0 | 0 | 0 | 0 | 0 | 0 | 0 | 0 |
| | | 15 | 0 | 0 | 0 | 0 | 0 | 0 | 0 | 0 | 0 | 0 | 0 |
| 1987 | 1 | 0 | 0 | 0 | 0 | 0 | 0 | 0 | 0 | 0 | 0 | 0 | 0 |
| | | 15 | 0 | 0 | 0 | 0 | 0 | 0 | 0 | 0 | 0 | 0 | 0 |
| 1988 | 1 | 0 | 0 | 0 | 0 | 0 | 0 | 0 | 0 | 0 | 0 | 0 | 0 |
| | | 15 | 0 | 0 | 0 | 0 | 0 | 0 | 0 | 0 | 0 | 0 | 0 |
| 1989 | 1 | 3 | 0 | 0 | 0 | 0 | 0 | 0 | 0 | 0 | 0 | 0 | 0 |
| | | 20 | 1 | 0 | 0 | 0 | 0 | 0 | 0 | 0 | 0 | 0 | 0 |
| 1990 | 2 | 3 | 0 | 0 | 0 | 0 | 0 | 0 | 0 | 0 | 0 | 0 | 0 |
| | | 20 | 1 | 0 | 0 | 0 | 0 | 0 | 0 | 0 | 0 | 2 | 0 |
| 1991 | 4 | 5 | 0 | 0 | 0 | 0 | 0 | 0 | 0 | 0 | 0 | 2 | 0 |
| | | 25 | 2 | 0 | 1 | 0 | 0 | 0 | 0 | 0 | 1 | 4 | 0 |
| 1992 | 2 | 5 | 1 | 0 | 0 | 0 | 0 | 0 | 0 | 0 | 0 | 2 | 0 |
| | | 25 | 2 | 2 | 1 | 0 | 0 | 0 | 0 | 0 | 1 | 4 | 1 |
| 1993 | 3 | 10 | 1 | 0 | 1 | 0 | 0 | 0 | 0 | 0 | 0 | 4 | 0 |
| | | 25 | 2 | 2 | 1 | 2 | 0 | 1 | 0 | 0 | 2 | 4 | 1 |
| 1994 | 23 | 10 | 2 | 1 | 1 | 1 | 0 | 0 | 0 | 0 | 0 | 8 | 1 |
| | | 25 | 2 | 3 | 1 | 2 | 1 | 1 | 0 | 0 | 2 | 9 | 1 |
| 1995 | 33 | 15 | 2 | 1 | 1 | 2 | 0 | 0 | 0 | 0 | 0 | 11 | 2 |
| | | 25 | 2 | 3 | 1 | 2 | 1 | 2 | 0 | 1 | 2 | 12 | 2 |

C O N G E N (CONTD.)
CONSTRAINTS ON CONFIGURATIONS GENERATED
CON: NUMBER OF CONFIGURATIONS
MINIMUM
MAXIMUM

RES. PERMITTED EXTREME CONFIGURATIONS OF ALTERNATIVES

| YEAR | CON | MAR-GIN | PPR2 | MCTH | LAKH | LAK2 | DUKI | CLIM | ICFG | NUKE | V-GT | HYD1 | HYD2 |
|---|---|---|---|---|---|---|---|---|---|---|---|---|---|
| 1996 | 42 | 15 | 2 | 1 | 1 | 2 | 1 | 1 | 0 | 0 | 0 | 12 | 2 |
| | | 25 | 2 | 3 | 1 | 2 | 1 | 3 | 0 | 1 | 2 | 14 | 2 |
| 1997 | 74 | 15 | 2 | 1 | 1 | 2 | 1 | 1 | 0 | 0 | 0 | 15 | 2 |
| | | 25 | 2 | 3 | 1 | 2 | 1 | 3 | 0 | 2 | 2 | 16 | 3 |
| 1998 | 30 | 15 | 2 | 1 | 1 | 2 | 1 | 3 | 0 | 0 | 0 | 18 | 2 |
| | | 25 | 2 | 3 | 1 | 2 | 1 | 3 | 0 | 2 | 2 | 19 | 3 |
| 1999 | 21 | 15 | 2 | 1 | 1 | 2 | 1 | 3 | 0 | 1 | 0 | 20 | 3 |
| | | 25 | 2 | 3 | 1 | 2 | 1 | 3 | 0 | 3 | 2 | 21 | 3 |
| 2000 | 13 | 15 | 2 | 1 | 1 | 2 | 1 | 3 | 0 | 2 | 0 | 20 | 3 |
| | | 25 | 2 | 3 | 1 | 2 | 1 | 3 | 0 | 3 | 2 | 21 | 3 |
| 2001 | 17 | 15 | 2 | 1 | 1 | 2 | 1 | 3 | 0 | 3 | 0 | 21 | 3 |
| | | 25 | 2 | 3 | 1 | 2 | 1 | 3 | 0 | 4 | 2 | 22 | 3 |
| 2002 | 32 | 15 | 2 | 2 | 1 | 2 | 1 | 3 | 0 | 3 | 0 | 22 | 3 |
| | | 25 | 2 | 4 | 1 | 2 | 1 | 3 | 1 | 4 | 2 | 23 | 3 |
| 2003 | 42 | 15 | 2 | 2 | 1 | 2 | 1 | 3 | 0 | 4 | 0 | 23 | 3 |
| | | 25 | 2 | 4 | 1 | 2 | 1 | 3 | 1 | 5 | 2 | 24 | 3 |
| 2004 | 15 | 15 | 2 | 2 | 1 | 2 | 1 | 3 | 0 | 4 | 1 | 23 | 3 |
| | | 25 | 2 | 4 | 1 | 2 | 1 | 3 | 2 | 5 | 3 | 24 | 3 |
| 2005 | 14 | 15 | 2 | 2 | 1 | 2 | 1 | 3 | 0 | 5 | 4 | 24 | 3 |
| | | 25 | 2 | 4 | 1 | 2 | 1 | 3 | 2 | 6 | 5 | 25 | 3 |

OPTIMUM SOLUTION
ANNUAL ADDITIONS: CAPACITY(MW) AND NUMBER OF UNITS OR PROJECTS
FOR DETAILS OF INDIVIDUAL UNITS OR PROJECTS SEE VARIABLE SYSTEM REPORT
SEE ALSO FIXED SYSTEM REPORT FOR OTHER ADDITIONS OR RETIREMENTS

| NAME: | | | | PPR2 | MCTH | LAKH | LAK2 | DUKI | CLIM | ICFG | NUKE | V-GT | HYD1 | HYD2 |
|---|---|---|---|---|---|---|---|---|---|---|---|---|---|---|
| SIZE (MW): | | | | 210. | 310. | 300. | 300. | 100. | 600. | 600. | 900. | 100. | 0. | 0. |
| YEAR | %LCLP MAINT | NOMNT | CAP | | | | | | | | | | | |
| 1986 | 4.523 | | 0. | | | | | | | | | | | |
| 1987 | 2.130 | | 0. | | | | | | | | | | | |
| 1988 | 4.248 | | 0. | | | | | | | | | | | |
| 1989 | 4.170 | | 210. | 1 | | | | | | | | | | |
| 1990 | 4.575 | | 864. | | | | | | | | | | 2 | |
| 1991 | 5.352 | | 1374. | 1 | | 1 | | | | | | | 2 | |
| 1992 | 6.232 | | 862. | | 2 | | | | | | | | | 1 |
| 1993 | 4.864 | | 1200. | | | | 2 | | 1 | | | | | |
| 1994 | 2.756 | | 1864. | | | | | 1 | | | | | 5 | |
| 1995 | 2.014 | | 1742. | | | | | | 1 | | | | 3 | 1 |
| 1996 | 2.254 | | 1200. | | | | | | 1 | | | | 2 | |
| 1997 | 2.024 | | 1747. | | | | | | | | 1 | | 2 | 1 |
| 1998 | 2.689 | | 1454. | | | | | | | | | | 3 | |
| 1999 | 2.552 | | 2054. | | | | | | | | 1 | | 2 | |
| 2000 | 3.435 | | 900. | | | | | | | | 1 | | | |
| 2001 | 3.745 | | 1754. | | | | | | | | 1 | | 1 | |
| 2002 | 5.352 | | 1154. | | 1 | | | | | | | | 1 | |
| 2003 | 4.592 | | 1832. | | | | | | | | 1 | | 1 | |
| 2004 | 5.200 | | 1100. | | 1 | | | | | 1 | | 2 | | |
| 2005 | 4.357 | | 2132. | | | | | | | | 1 | 3 | 1 | |

SUMMARY OF
FIXED SYSTEM PLUS OPTIMUM SOLUTION
(NOMINAL CAPACITY IN MW, ENERGY IN GWH)

| YEAR | HYDROELECTRIC HYD1 PR. | HYD1 CAP | HYD2 PR. | HYD2 CAP | THERMAL FUEL TYPE CAPACITIES 0 COAL | 1 HSDP | 2 FOIL | 3 GASF | 4 NUCL | TOTAL CAP | SYSTEM RES. % | LOLP. % | ENERGY NOT SERVED HYDROCONDITION 1 | 2 | 3 |
|---|---|---|---|---|---|---|---|---|---|---|---|---|---|---|---|
| 1986 | 2 | 1750 | 4 | 1156 | 16 | 915 | 1228 | 665 | 130 | 5460 | 17.7 | 4.528 | 344 | 3 | 3 |
| 1987 | 2 | 1750 | 4 | 1156 | 16 | 915 | 1228 | 1165 | 130 | 6360 | 25.0 | 2.180 | 136 | 2 | 4 |
| 1988 | 2 | 1750 | 4 | 1156 | 16 | 915 | 1228 | 1315 | 130 | 6510 | 16.6 | 4.248 | 335 | 9 | 3 |
| 1989 | 2 | 1750 | 6 | 1345 | 16 | 915 | 1898 | 1315 | 130 | 7369 | 17.9 | 4.170 | 344 | 11 | 5 |
| 1990 | 4 | 2614 | 6 | 1345 | 16 | 915 | 2318 | 1315 | 130 | 8653 | 24.1 | 4.575 | 563 | 4 | 5 |
| 1991 | 6 | 3478 | 6 | 1345 | 316 | 915 | 2342 | 1301 | 130 | 9827 | 27.0 | 5.942 | 971 | 5 | 5 |
| 1992 | 6 | 3478 | 7 | 1607 | 316 | 895 | 2942 | 1272 | 130 | 10640 | 24.4 | 6.282 | 1125 | 10 | 4 |
| 1993 | 6 | 3478 | 7 | 1607 | 1516 | 885 | 2942 | 1272 | 130 | 11830 | 26.8 | 4.864 | 842 | 5 | 4 |
| 1994 | 11 | 5242 | 7 | 1607 | 1616 | 885 | 2942 | 1272 | 130 | 13694 | 34.3 | 2.766 | 427 | 6 | 12 |
| 1995 | 14 | 6274 | 8 | 1717 | 2200 | 885 | 2822 | 1272 | 130 | 15300 | 38.5 | 2.014 | 332 | 10 | 13 |
| 1996 | 16 | 6874 | 8 | 1717 | 2800 | 833 | 2822 | 1204 | 130 | 16380 | 36.8 | 2.254 | 433 | 9 | 13 |
| 1997 | 18 | 7474 | 9 | 1964 | 2800 | 833 | 2690 | 1204 | 1030 | 17995 | 38.8 | 2.024 | 417 | 10 | 12 |
| 1998 | 21 | 8928 | 9 | 1964 | 2800 | 828 | 2630 | 1180 | 1030 | 19360 | 38.2 | 2.689 | 721 | 7 | 7 |
| 1999 | 23 | 10082 | 9 | 1964 | 2800 | 828 | 2570 | 1180 | 1930 | 21354 | 41.5 | 2.552 | 764 | 11 | 7 |
| 2000 | 23 | 10082 | 9 | 1964 | 2800 | 828 | 2570 | 1180 | 2830 | 22254 | 37.0 | 3.435 | 1272 | 8 | 9 |
| 2001 | 24 | 10936 | 9 | 1964 | 2800 | 808 | 2445 | 1180 | 3730 | 23863 | 36.9 | 3.745 | 1546 | 9 | 8 |
| 2002 | 25 | 11790 | 9 | 1964 | 2800 | 808 | 2745 | 1180 | 3730 | 24817 | 32.9 | 5.352 | 2627 | 6 | 7 |
| 2003 | 26 | 12722 | 9 | 1964 | 2800 | 808 | 2745 | 1180 | 4630 | 26649 | 33.4 | 4.592 | 2294 | 7 | 8 |
| 2004 | 26 | 12722 | 9 | 1964 | 3400 | 808 | 3045 | 1180 | 4630 | 27749 | 30.2 | 5.200 | 2668 | 9 | 10 |
| 2005 | 27 | 13654 | 9 | 1964 | 3400 | 1108 | 3045 | 910 | 5530 | 29611 | 30.5 | 4.357 | 2339 | 9 | 10 |



151

D Y N P R O

SUMMARY OF CAPITAL COSTS OF ALTERNATIVES IN $/KW

| PLANT | CAPITAL COSTS (DEPRECIABLE PART) DOMESTIC | FOREIGN | INCLUSIVE IDC % | CONSTR. TIME (YEARS) | PLANT LIFE (YEARS) | CAPITAL COSTS (NON-DEPREC. PART) DOMESTIC | FOREIGN |
|---|---|---|---|---|---|---|---|
| THERMAL PLANT CAPITAL COSTS | | | | | | | |
| PPR2 | 458.2 | 458.2 | 13.79 | 3.50 | 30. | 0.0 | 61.7 |
| MCTH | 444.5 | 444.5 | 15.63 | 4.00 | 30. | 0.0 | 60.3 |
| LAKH | 761.2 | 761.2 | 19.21 | 5.00 | 30. | 16.4 | 0.0 |
| LAK2 | 545.2 | 545.2 | 15.63 | 4.00 | 30. | 16.4 | 0.0 |
| DUKT | 615.0 | 615.0 | 19.21 | 5.00 | 30. | 17.0 | 0.0 |
| CLIM | 643.7 | 643.7 | 19.21 | 5.00 | 30. | 0.0 | 57.8 |
| ICFG | 772.4 | 772.4 | 19.21 | 5.00 | 30. | 0.0 | 60.3 |
| NUKE | 463.2 | 1386.8 | 29.22 | 8.00 | 30. | 0.0 | 132.0 |
| V-GT | 274.2 | 296.9 | 8.08 | 2.00 | 25. | 0.0 | 60.2 |
| HYDI - HYDRO PROJECT CAPITAL COSTS, PROJECT LIFE: 50. | | | | | | | |
| 1 | 259.0 | 280.0 | 22.67 | 6.00 | | | |
| 2 | 259.0 | 280.0 | 22.67 | 6.00 | | | |
| 3 | 259.0 | 280.0 | 22.67 | 6.00 | | | |
| 4 | 259.0 | 280.0 | 22.67 | 6.00 | | | |
| 5 | 259.0 | 280.0 | 22.67 | 6.00 | | | |
| 6 | 259.0 | 280.0 | 22.67 | 6.00 | | | |
| 7 | 902.0 | 1103.0 | 29.22 | 8.00 | | | |
| 8 | 902.0 | 1103.0 | 29.22 | 8.00 | | | |
| 9 | 902.0 | 1103.0 | 29.22 | 8.00 | | | |
| 10 | 902.0 | 1103.0 | 29.22 | 8.00 | | | |
| 11 | 902.0 | 1103.0 | 29.22 | 8.00 | | | |
| 12 | 259.0 | 280.0 | 22.67 | 6.00 | | | |
| 13 | 902.0 | 1103.0 | 29.22 | 8.00 | | | |
| 14 | 902.0 | 1103.0 | 29.22 | 8.00 | | | |
| 15 | 902.0 | 1103.0 | 29.22 | 8.00 | | | |
| 16 | 259.0 | 280.0 | 22.67 | 6.00 | | | |
| 17 | 259.0 | 280.0 | 22.67 | 6.00 | | | |
| 18 | 259.0 | 280.0 | 22.67 | 6.00 | | | |
| 19 | 614.0 | 751.0 | 29.22 | 8.00 | | | |

D Y N P R O (CONTD.)

SUMMARY OF CAPITAL COSTS OF ALTERNATIVES IN $/KW

| PLANT | CAPITAL COSTS (DEPRECIABLE PART) DOMESTIC | FOREIGN | INCLUSIVE IDC % | CONSTR. TIME (YEARS) | PLANT LIFE (YEARS) | CAPITAL COSTS (NON-DEPREC. PART) DOMESTIC | FOREIGN |
|---|---|---|---|---|---|---|---|
| HYD1 - HYDRO PROJECT CAPITAL COSTS, PROJECT LIFE: 50. | | | | | | (CONTD.) | |
| 20 | 259.0 | 280.0 | 22.67 | 6.00 | | | |
| 21 | 614.0 | 751.0 | 29.22 | 8.00 | | | |
| 22 | 614.0 | 751.0 | 29.22 | 8.00 | | | |
| 23 | 614.0 | 751.0 | 29.22 | 8.00 | | | |
| 24 | 777.0 | 949.0 | 29.22 | 8.00 | | | |
| 25 | 777.0 | 949.0 | 29.22 | 8.00 | | | |
| 26 | 777.0 | 949.0 | 29.22 | 8.00 | | | |
| 27 | 777.0 | 949.0 | 29.22 | 8.00 | | | |
| 28 | 1394.0 | 1704.0 | 29.22 | 8.00 | | | |
| HYD2 - HYDRO PROJECT CAPITAL COSTS, PROJECT LIFE: 50. | | | | | | | |
| 1 | 582.0 | 711.0 | 22.67 | 6.00 | | | |
| 2 | 582.0 | 711.0 | 22.67 | 6.00 | | | |
| 3 | 582.0 | 711.0 | 22.67 | 6.00 | | | |
| 4 | 1380.0 | 1687.0 | 29.22 | 8.00 | | | |
| 5 | 1380.0 | 1687.0 | 29.22 | 8.00 | | | |



124

D Y N P R O

ECONOMIC PARAMETERS AND CONSTRAINTS

ALL COSTS WILL BE DISCOUNTED TO YEAR : 1986
BASE YEAR FOR ESCALATION CALCULATION IS : 1986

1986 INITIAL VALUES : (XX) = INDEX NUMBER; ( 0) = NO INDEX READ
**********

NAME OF ALTERNATIVES :

| | PPR2 | MCTH | LAKH | LAK2 | DUKI | CLIM | ICFG | NUKE | V-GT | HYD1 | HYD2 |
|---|---|---|---|---|---|---|---|---|---|---|---|

DISCOUNT RATE APPLIED TO ALL DOMESTIC CAPITAL COSTS - %/YR 10.0
DISCOUNT RATE APPLIED TO ALL FOREIGN CAPITAL COSTS - %/YR 10.0

ESCALATION RATIOS FOR CAPITAL COSTS ( 0)

| | | | | | | | | | | | |
|---|---|---|---|---|---|---|---|---|---|---|---|
| DOMESTIC | 1.00 | 1.00 | 1.00 | 1.00 | 1.00 | 1.00 | 1.00 | 1.00 | 1.00 | 1.00 | 1.00 |
| FOREIGN | 1.00 | 1.00 | 1.00 | 1.00 | 1.00 | 1.00 | 1.00 | 1.00 | 1.00 | 1.00 | 1.00 |

MAXIMUM NUMBER OF UNITS WHICH CAN BE ADDED ( 0)

| | | | | | | | | | | |
|---|---|---|---|---|---|---|---|---|---|---|
| 50 | 50 | 50 | 50 | 50 | 50 | 50 | 50 | 50 | 50 | 50 |

MINIMUM NUMBER OF UNITS WHICH MUST BE ADDED ( 0)

| | | | | | | | | | | |
|---|---|---|---|---|---|---|---|---|---|---|
| 0 | 0 | 0 | 0 | 0 | 0 | 0 | 0 | 0 | 0 | 0 |

D Y N P R C (CONTD.)

ECONOMIC PARAMETERS AND CONSTRAINTS

1986 INITIAL VALUES : (XX) = INDEX NUMBER; ( 0) = NO INDEX READ
**********

| FUEL TYPE: | THERMAL | | | | | HYDROELECTRIC | | ENERGY |
|---|---|---|---|---|---|---|---|---|
| | COAL | HSDP | FOIL | GASF | NUCL | HYD1 | HYD2 | NOT SERVED |

DISCOUNT RATE APPLIED TO ALL DOMESTIC OPERATION COSTS - %/YR (14) 10.0
DISCOUNT RATE APPLIED TO ALL FOREIGN OPERATION COSTS - %/YR (15) 10.0

ESCALATION RATIOS FOR OPERATING COSTS ( 0)

| | | | | | | | | |
|---|---|---|---|---|---|---|---|---|
| DOMESTIC | 1.00 | 1.00 | 1.00 | 1.00 | 1.00 | 1.00 | 1.00 | 1.00 |
| FOREIGN | 1.00 | 1.00 | 1.00 | 1.00 | 1.00 | 1.00 | 1.00 | 1.00 |

MULTIPLYING FACTOR FOR FUEL COSTS ( 0)

| | | | | | | | | |
|---|---|---|---|---|---|---|---|---|
| DOMESTIC | 1.00 | 1.00 | 1.00 | 1.00 | 1.00 | 1.00 | 1.00 | 1.00 |
| FOREIGN | 1.00 | 1.00 | 1.00 | 1.00 | 1.00 | 1.00 | 1.00 | 1.00 |

| COEFFICIENTS OF ENERGY NOT SERVED COST FUNCTION (11) | CF1 | CF2 | CF3 |
|---|---|---|---|
| ($/KWH) | 0.2000 | 0.0000 | 0.0000 |

PENALTY FACTOR ON FOREIGN EXPENDITURE ( 0) 1.0000

CRITICAL LOSS OF LOAD PROBABILITY IN % ( 0) 100.0000

DEPRECIATION OPTION (16) : 1 = SINKING FUND

EXPECTED COST OF OPERATION
FUEL COST
DOMESTIC

| TYPE OF PLANT : | | COAL | HSOP | FOIL | GASF | NUCL | HYD1 | HYD2 |
|---|---|---|---|---|---|---|---|---|
| YEAR | TOTAL | | | COST BY PLANT TYPE (1000$) | | | | |
| 1986 | 142896 | 3831 | 0 | 0 | 134388 | 4678 | 0 | 0 |
| 1987 | 227106 | 4112 | 0 | 0 | 218146 | 4848 | 0 | 0 |
| 1988 | 320078 | 4330 | 0 | 0 | 310688 | 5060 | 0 | 0 |
| 1989 | 313551 | 4352 | 0 | 0 | 304128 | 5072 | 0 | 0 |
| 1990 | 313621 | 4306 | 0 | 0 | 304291 | 5025 | 0 | 0 |
| 1991 | 354627 | 51199 | 0 | 0 | 298405 | 5023 | 0 | 0 |
| 1992 | 345573 | 51295 | 0 | 0 | 289241 | 5037 | 0 | 0 |
| 1993 | 431789 | 144893 | 0 | 0 | 281831 | 5066 | 0 | 0 |
| 1994 | 414824 | 153942 | 0 | 0 | 255912 | 4970 | 0 | 0 |
| 1995 | 382398 | 146771 | 0 | 0 | 230911 | 4716 | 0 | 0 |
| 1996 | 366097 | 147534 | 0 | 0 | 213819 | 4744 | 0 | 0 |
| 1997 | 343394 | 144474 | 0 | 0 | 194230 | 4689 | 0 | 0 |
| 1998 | 338466 | 146018 | 0 | 0 | 187855 | 4593 | 0 | 0 |
| 1999 | 300804 | 140368 | 0 | 0 | 155878 | 4558 | 0 | 0 |
| 2000 | 312338 | 138984 | 0 | 0 | 168819 | 4534 | 0 | 0 |
| 2001 | 294273 | 135425 | 0 | 0 | 154388 | 4460 | 0 | 0 |
| 2002 | 311424 | 138258 | 0 | 0 | 168597 | 4569 | 0 | 0 |
| 2003 | 292058 | 133309 | 0 | 0 | 154398 | 4351 | 0 | 0 |
| 2004 | 314018 | 141480 | 0 | 0 | 168048 | 4491 | 0 | 0 |
| 2005 | 279496 | 133820 | 0 | 0 | 141255 | 4420 | 0 | 0 |

EXPECTED COST OF OPERATION
FUEL COST
FOREIGN

| TYPE OF PLANT : | | COAL | HSDP | FOIL | GASF | NUCL | HYD1 | HYD2 |
|---|---|---|---|---|---|---|---|---|
| YEAR | TOTAL | | | COST BY PLANT TYPE (1000$) | | | | |
| 1986 | 253356 | 0 | 24077 | 229279 | 0 | 0 | 0 | 0 |
| 1987 | 271642 | 0 | 23028 | 248614 | 0 | 0 | 0 | 0 |
| 1988 | 277971 | 0 | 43175 | 234796 | 0 | 0 | 0 | 0 |
| 1989 | 418858 | 0 | 42089 | 376770 | 0 | 0 | 0 | 0 |
| 1990 | 530584 | 0 | 41876 | 488708 | 0 | 0 | 0 | 0 |
| 1991 | 579773 | 0 | 58241 | 521533 | 0 | 0 | 0 | 0 |
| 1992 | 697653 | 0 | 52086 | 645568 | 0 | 0 | 0 | 0 |
| 1993 | 711322 | 100590 | 106933 | 503799 | 0 | 0 | 0 | 0 |
| 1994 | 637387 | 99460 | 64014 | 473913 | 0 | 0 | 0 | 0 |
| 1995 | 632237 | 194826 | 42507 | 394904 | 0 | 0 | 0 | 0 |
| 1996 | 672506 | 285156 | 34663 | 352687 | 0 | 0 | 0 | 0 |
| 1997 | 627315 | 249813 | 64754 | 284661 | 0 | 28087 | 0 | 0 |
| 1998 | 634189 | 262438 | 62442 | 283641 | 0 | 25668 | 0 | 0 |
| 1999 | 559051 | 234055 | 33018 | 234170 | 0 | 52808 | 0 | 0 |
| 2000 | 611476 | 238007 | 48619 | 245993 | 0 | 78856 | 0 | 0 |
| 2001 | 598075 | 224317 | 44974 | 225502 | 0 | 103281 | 0 | 0 |
| 2002 | 688708 | 236102 | 49438 | 299329 | 0 | 103840 | 0 | 0 |
| 2003 | 658161 | 209173 | 43380 | 274414 | 0 | 131195 | 0 | 0 |
| 2004 | 854135 | 305445 | 65502 | 348274 | 0 | 134915 | 0 | 0 |
| 2005 | 873636 | 303735 | 86225 | 323933 | 0 | 159743 | 0 | 0 |

EXPECTED COST OF OPERATION
OPERATION & MAINTENANCE AND ENERGY NOT SERVED (ENS)
DOMESTIC

| TYPE OF PLANT : | | COAL | HSDP | FOIL | GASF | NUCL | HYD1 | HYD2 | ENS |
|---|---|---|---|---|---|---|---|---|---|
| YEAR | TOTAL | | | COST BY PLANT TYPE (1000$) | | | | | |
| 1986 | 108219 | 515 | 3686 | 16883 | 8315 | 3626 | 33390 | 22056 | 19738 |
| 1987 | 105209 | 547 | 5947 | 17587 | 14021 | 3701 | 33390 | 22056 | 7961 |
| 1988 | 125935 | 571 | 6586 | 17021 | 22635 | 3795 | 33390 | 22056 | 19880 |
| 1989 | 142357 | 573 | 6546 | 29122 | 22634 | 3800 | 33390 | 25663 | 20629 |
| 1990 | 178881 | 568 | 6520 | 37684 | 22627 | 3780 | 49875 | 25663 | 32165 |
| 1991 | 228698 | 8447 | 5998 | 40183 | 22170 | 3779 | 66360 | 25663 | 55098 |
| 1992 | 252789 | 8457 | 6699 | 50870 | 21756 | 3785 | 66360 | 30662 | 64200 |
| 1993 | 258601 | 38406 | 8293 | 42386 | 20872 | 3798 | 66360 | 30662 | 47824 |
| 1994 | 268445 | 46242 | 7015 | 41684 | 20145 | 3755 | 100617 | 30662 | 24923 |
| 1995 | 292391 | 53193 | 6354 | 37415 | 19211 | 3643 | 119708 | 32760 | 20108 |
| 1996 | 318856 | 66637 | 5822 | 35253 | 17928 | 3656 | 131156 | 32760 | 25644 |
| 1997 | 348591 | 62981 | 6662 | 30536 | 16282 | 27190 | 142604 | 37473 | 24864 |
| 1998 | 392805 | 64431 | 6621 | 30490 | 16005 | 26049 | 170346 | 37473 | 41391 |
| 1999 | 432898 | 61418 | 5900 | 27774 | 14565 | 49165 | 192364 | 37473 | 44239 |
| 2000 | 485396 | 61603 | 6240 | 28415 | 15057 | 71787 | 192364 | 37473 | 72457 |
| 2001 | 534600 | 60054 | 5988 | 26631 | 14369 | 93644 | 208659 | 37473 | 87782 |
| 2002 | 618431 | 61423 | 4944 | 32466 | 15170 | 93952 | 224953 | 37473 | 148050 |
| 2003 | 635858 | 58603 | 4726 | 31200 | 14518 | 117076 | 242735 | 37473 | 129526 |
| 2004 | 692597 | 84069 | 6562 | 37018 | 15228 | 118832 | 242735 | 37473 | 150680 |
| 2005 | 711915 | 83276 | 8949 | 35767 | 12727 | 140878 | 260518 | 37473 | 132327 |

EXPECTED COST OF OPERATION
TOTAL COST
DOMESTIC AND FOREIGN

| TYPE OF PLANT : | | COAL | HSDP | FOIL | GASF | NUCL | HYD1 | HYD2 | ENS |
|---|---|---|---|---|---|---|---|---|---|
| YEAR | TOTAL | | | COST BY PLANT TYPE (1000$) | | | | | |
| 1986 | 504462 | 4345 | 27763 | 246162 | 142763 | 8304 | 33390 | 22056 | 19738 |
| 1987 | 603958 | 4659 | 28975 | 266201 | 232167 | 8549 | 33390 | 22056 | 7961 |
| 1988 | 723933 | 4901 | 43761 | 251818 | 333323 | 8855 | 33390 | 22056 | 19880 |
| 1989 | 374766 | 4925 | 48634 | 405892 | 326761 | 8872 | 33390 | 25663 | 20629 |
| 1990 | 1023087 | 4874 | 48396 | 526393 | 326917 | 8805 | 49875 | 25663 | 32165 |
| 1991 | 1153097 | 59646 | 65239 | 561715 | 320574 | 8802 | 66360 | 25663 | 55098 |
| 1992 | 1296013 | 59752 | 58785 | 696438 | 310997 | 8822 | 66360 | 30662 | 64200 |
| 1993 | 1401709 | 283889 | 115226 | 546185 | 302703 | 8863 | 66360 | 30662 | 47824 |
| 1994 | 1320654 | 293643 | 71031 | 515596 | 276658 | 8726 | 100017 | 30662 | 24923 |
| 1995 | 1307023 | 394791 | 48861 | 432319 | 250121 | 8359 | 119708 | 32760 | 20109 |
| 1996 | 1357457 | 499327 | 40485 | 387941 | 231747 | 8400 | 131156 | 32760 | 25644 |
| 1997 | 1319297 | 457268 | 71416 | 315197 | 210512 | 59966 | 142604 | 37473 | 24864 |
| 1998 | 1365458 | 472888 | 63063 | 314131 | 203860 | 56309 | 170346 | 37473 | 41391 |
| 1999 | 1292752 | 435841 | 43918 | 261944 | 170443 | 106532 | 192364 | 37473 | 44239 |
| 2000 | 1409209 | 438595 | 54859 | 274408 | 183876 | 155178 | 192364 | 37473 | 72457 |
| 2001 | 1426946 | 419796 | 50563 | 252133 | 168756 | 201386 | 208659 | 37473 | 87782 |
| 2002 | 1618561 | 435783 | 54381 | 331795 | 183768 | 202361 | 224953 | 37473 | 148050 |
| 2003 | 1586075 | 401084 | 48106 | 305614 | 168917 | 252622 | 242735 | 37473 | 129526 |
| 2004 | 1860750 | 530994 | 72064 | 385292 | 183276 | 258237 | 242735 | 37473 | 150680 |
| 2005 | 1865043 | 520831 | 95175 | 359700 | 153982 | 305041 | 260518 | 37473 | 132327 |

DOMESTIC CONSTRUCTION COSTS

| YEAR | # | PLANT | 1984 | 1985 | 1986 | 1987 | 1988 | 1989 | 1990 | 1991 | 1992 | 1993 | 1994 | 1995 | 1996 | 1997 | 1998 | SUM |
|---|---|---|---|---|---|---|---|---|---|---|---|---|---|---|---|---|---|---|
| 1989 | 1 | PPR2 | | 1.9 | 17.0 | 43.1 | 21.0 | | | | | | | | | | | 93.0 |
| 1990 | 1 | HA-1 | 2.4 | 6.1 | 18.7 | 32.0 | 21.4 | 6.0 | | | | | | | | | | 86.5 |
| 1990 | 1 | HA-2 | 2.4 | 6.1 | 18.7 | 32.0 | 21.4 | 6.0 | | | | | | | | | | 86.5 |
| 1991 | 1 | PPR2 | | | | 1.9 | 17.0 | 43.1 | 21.0 | | | | | | | | | 93.0 |
| 1991 | 1 | LAK1 | | | 5.7 | 20.0 | 63.1 | 65.5 | 21.2 | | | | | | | | | 184.5 |
| 1991 | 1 | HA-3 | | 2.4 | 6.1 | 18.7 | 32.0 | 21.4 | 6.0 | | | | | | | | | 86.5 |
| 1991 | 1 | HA-4 | | 2.4 | 6.1 | 18.7 | 32.0 | 21.4 | 6.0 | | | | | | | | | 86.5 |
| 1992 | 2 | MCTH | | | | | 11.7 | 58.9 | 108.4 | 46.0 | | | | | | | | 225.0 |
| 1992 | 1 | HB-1 | | | 3.3 | 8.2 | 25.4 | 43.6 | 29.1 | 8.1 | | | | | | | | 117.9 |
| 1993 | 2 | LAK2 | | | | | | 14.4 | 72.3 | 132.5 | 56.4 | | | | | | | 276.0 |
| 1993 | 1 | CLI4 | | | | | 11.5 | 47.3 | 106.7 | 110.8 | 35.8 | | | | | | | 312.0 |
| 1994 | 1 | DUK1 | | | | | | 1.8 | 7.5 | 17.0 | 17.6 | 5.7 | | | | | | 49.7 |
| 1994 | 1 | HA-5 | | | | | 2.4 | 6.1 | 18.7 | 32.0 | 21.4 | 6.0 | | | | | | 86.5 |
| 1994 | 1 | HA-6 | | | | | 2.4 | 6.1 | 18.7 | 32.0 | 21.4 | 6.0 | | | | | | 86.5 |
| 1994 | 1 | HA-7 | | | 3.7 | 6.3 | 18.6 | 31.6 | 56.9 | 35.4 | 31.4 | 7.7 | | | | | | 191.5 |
| 1994 | 1 | HA-8 | | | 3.7 | 6.3 | 18.6 | 31.6 | 56.9 | 35.4 | 31.4 | 7.7 | | | | | | 191.5 |
| 1994 | 1 | HA-9 | | | 3.7 | 6.3 | 18.6 | 31.6 | 56.9 | 35.4 | 31.4 | 7.7 | | | | | | 191.5 |
| 1995 | 1 | CLI4 | | | | | | | 11.4 | 47.3 | 106.7 | 110.8 | 35.8 | | | | | 312.0 |
| 1995 | 1 | HA10 | | | | 3.7 | 6.3 | 18.6 | 31.6 | 56.9 | 35.4 | 31.4 | 7.7 | | | | | 191.5 |
| 1995 | 1 | HA11 | | | | 3.7 | 6.3 | 18.6 | 31.6 | 56.9 | 35.4 | 31.4 | 7.7 | | | | | 191.5 |
| 1995 | 1 | HA12 | | | | | | 2.4 | 6.1 | 18.7 | 32.0 | 21.4 | 6.0 | | | | | 86.5 |
| 1995 | 1 | HB-2 | | | | | | 1.4 | 3.5 | 10.7 | 18.3 | 12.2 | 3.4 | | | | | 49.5 |
| 1996 | 1 | CLI4 | | | | | | | | 11.4 | 47.3 | 106.7 | 110.8 | 35.8 | | | | 312.0 |
| 1996 | 1 | HA13 | | | | | 3.7 | 6.3 | 18.6 | 31.6 | 56.9 | 35.4 | 31.4 | 7.7 | | | | 191.5 |
| 1996 | 1 | HA14 | | | | | 3.7 | 6.3 | 18.6 | 31.6 | 56.9 | 35.4 | 31.4 | 7.7 | | | | 191.5 |
| 1997 | 1 | NUKE | | | | | | 5.7 | 9.7 | 28.6 | 48.6 | 87.6 | 54.5 | 48.4 | 11.9 | | | 295.1 |
| 1997 | 1 | HA15 | | | | | | 3.7 | 6.3 | 18.6 | 31.6 | 56.9 | 35.4 | 31.4 | 7.7 | | | 191.5 |
| 1997 | 1 | HA16 | | | | | | | | 1.7 | 4.2 | 13.0 | 22.2 | 14.8 | 4.2 | | | 60.1 |
| 1997 | 1 | HB-3 | | | | | | | | 3.1 | 7.8 | 24.0 | 41.1 | 27.4 | 7.7 | | | 111.2 |
| 1998 | 1 | HA17 | | | | | | | | | 1.7 | 4.2 | 13.0 | 22.2 | 14.8 | 4.2 | | 60.1 |
| 1998 | 1 | HA18 | | | | | | | | | 1.7 | 4.2 | 13.0 | 22.2 | 14.8 | 4.2 | | 60.1 |
| 1998 | 1 | HA19 | | | | | | | 7.2 | 12.2 | 36.6 | 61.2 | 110.2 | 68.6 | 60.8 | 15.0 | | 371.1 |

DOMESTIC CONSTRUCTION COSTS (CONTD.)

| YEAR | # | PLANT | 1991 | 1992 | 1993 | 1994 | 1995 | 1996 | 1997 | 1998 | 1999 | 2000 | 2001 | 2002 | 2003 | 2004 | 2005 | SUM |
|---|---|---|---|---|---|---|---|---|---|---|---|---|---|---|---|---|---|---|
| 1999 | 1 | NUKE | 5.7 | 9.7 | 28.6 | 48.6 | 87.6 | 54.5 | 48.4 | 11.9 | | | | | | | | 295.1 |
| 1999 | 1 | HA20 | | | 1.7 | 4.2 | 13.0 | 22.2 | 14.8 | 4.2 | | | | | | | | 60.1 |
| 1999 | 1 | HA21 | 7.2 | 12.2 | 36.0 | 61.2 | 110.2 | 68.6 | 60.8 | 15.0 | | | | | | | | 371.1 |
| 2000 | 1 | NUKE | | 5.7 | 9.7 | 28.6 | 48.6 | 87.6 | 54.5 | 48.4 | 11.9 | | | | | | | 295.1 |
| 2001 | 1 | NUKE | | | 5.7 | 9.7 | 28.6 | 48.6 | 87.6 | 54.5 | 48.4 | 11.9 | | | | | | 295.1 |
| 2001 | 1 | HA22 | | | 7.2 | 12.2 | 36.0 | 61.2 | 110.2 | 68.6 | 60.8 | 15.0 | | | | | | 371.1 |
| 2002 | 1 | MCTH | | | | | | | | 5.9 | 29.5 | 54.2 | 23.0 | | | | | 112.5 |
| 2002 | 1 | HA23 | | | | 7.2 | 12.2 | 36.0 | 61.2 | 110.2 | 68.6 | 60.8 | 15.0 | | | | | 371.1 |
| 2003 | 1 | NUKE | | | | | 5.7 | 9.7 | 28.6 | 48.6 | 87.6 | 54.5 | 48.4 | 11.9 | | | | 295.1 |
| 2003 | 1 | HA24 | | | | | 9.9 | 16.8 | 49.7 | 84.5 | 152.2 | 94.7 | 84.0 | 20.7 | | | | 512.6 |
| 2004 | 1 | MCTH | | | | | | | | | | 5.9 | 29.5 | 54.2 | 23.0 | | | 112.5 |
| 2004 | 1 | IGFG | | | | | | | | | 13.7 | 56.8 | 128.1 | 132.9 | 43.0 | | | 374.4 |
| 2004 | 2 | V-GT | | | | | | | | | | | | 15.8 | 34.6 | | | 50.4 |
| 2005 | 1 | NUKE | | | | | | | 5.7 | 9.7 | 28.6 | 48.6 | 87.6 | 54.5 | 48.4 | 11.9 | | 295.1 |
| 2005 | 3 | V-GT | | | | | | | | | | | | | 23.7 | 51.9 | | 75.6 |
| 2005 | 1 | HA25 | | | | | | | 9.9 | 16.8 | 49.7 | 84.5 | 152.2 | 94.7 | 84.0 | 20.7 | | 512.6 |

FOREIGN CONSTRUCTION COSTS

| YEAR | # | PLANT | 1984 | 1985 | 1986 | 1987 | 1988 | 1989 | 1990 | 1991 | 1992 | 1993 | 1994 | 1995 | 1996 | 1997 | 1998 | SUM |
|---|---|---|---|---|---|---|---|---|---|---|---|---|---|---|---|---|---|---|
| 1989 | 1 | PPR2 | | 1.9 | 17.0 | 43.1 | 21.0 | | | | | | | | | | | 83.0 |
| 1990 | 1 | HA-1 | 2.6 | 6.5 | 20.2 | 34.6 | 23.1 | 6.5 | | | | | | | | | | 93.5 |
| 1990 | 1 | HA-2 | 2.6 | 6.5 | 20.2 | 34.6 | 23.1 | 6.5 | | | | | | | | | | 93.5 |
| 1991 | 1 | PPR2 | | | | 1.9 | 17.0 | 43.1 | 21.0 | | | | | | | | | 83.0 |
| 1991 | 1 | LAK1 | | | 5.7 | 28.0 | 63.1 | 65.5 | 21.2 | | | | | | | | | 184.5 |
| 1991 | 1 | HA-3 | | 2.6 | 6.5 | 20.2 | 34.6 | 23.1 | 6.5 | | | | | | | | | 93.5 |
| 1991 | 1 | HA-4 | | 2.6 | 6.5 | 20.2 | 34.6 | 23.1 | 6.5 | | | | | | | | | 93.5 |
| 1992 | 2 | MCTH | | | | | 11.7 | 58.9 | 108.4 | 46.0 | | | | | | | | 225.0 |
| 1992 | 1 | HB-1 | | | 4.1 | 10.1 | 31.1 | 53.3 | 35.6 | 10.0 | | | | | | | | 144.1 |
| 1993 | 2 | LAK2 | | | | | | 14.4 | 72.3 | 132.9 | 56.4 | | | | | | | 276.0 |
| 1993 | 1 | CLIM | | | | | 11.4 | 47.3 | 106.7 | 110.8 | 35.8 | | | | | | | 312.0 |
| 1994 | 1 | DUK1 | | | | | | 1.8 | 7.5 | 17.0 | 17.6 | 5.7 | | | | | | 49.7 |
| 1994 | 1 | HA-5 | | | | | 2.6 | 6.5 | 20.2 | 34.6 | 23.1 | 6.5 | | | | | | 93.5 |
| 1994 | 1 | HA-6 | | | | | 2.6 | 6.5 | 20.2 | 34.6 | 23.1 | 6.5 | | | | | | 93.5 |
| 1994 | 1 | HA-7 | | | 4.5 | 7.7 | 22.7 | 38.6 | 69.5 | 43.3 | 38.4 | 9.5 | | | | | | 234.2 |
| 1994 | 1 | HA-8 | | | 4.5 | 7.7 | 22.7 | 38.6 | 69.5 | 43.3 | 38.4 | 9.5 | | | | | | 234.2 |
| 1994 | 1 | HA-9 | | | 4.5 | 7.7 | 22.7 | 38.6 | 69.5 | 43.3 | 38.4 | 9.5 | | | | | | 234.2 |
| 1995 | 1 | CLIM | | | | | | | 11.4 | 47.3 | 106.7 | 110.8 | 35.8 | | | | | 312.0 |
| 1995 | 1 | HA10 | | | | 4.5 | 7.7 | 22.7 | 38.6 | 69.5 | 43.3 | 38.4 | 9.5 | | | | | 234.2 |
| 1995 | 1 | HA11 | | | | 4.5 | 7.7 | 22.7 | 38.6 | 69.5 | 43.3 | 38.4 | 9.5 | | | | | 234.2 |
| 1995 | 1 | HA12 | | | | | | 2.6 | 6.5 | 20.2 | 34.6 | 23.1 | 6.5 | | | | | 93.5 |
| 1995 | 1 | HB-2 | | | | | | 1.7 | 4.2 | 13.1 | 22.4 | 14.9 | 4.2 | | | | | 60.5 |
| 1996 | 1 | CLIM | | | | | | | | 11.4 | 47.3 | 106.7 | 110.8 | 35.8 | | | | 312.0 |
| 1996 | 1 | HA13 | | | | | 4.5 | 7.7 | 22.7 | 38.6 | 69.5 | 43.3 | 38.4 | 9.5 | | | | 234.2 |
| 1996 | 1 | HA14 | | | | | 4.5 | 7.7 | 22.7 | 38.6 | 69.5 | 43.3 | 38.4 | 9.5 | | | | 234.2 |
| 1997 | 1 | NUKE | | | | | | 17.1 | 29.0 | 85.7 | 145.6 | 262.3 | 163.3 | 144.8 | 35.7 | | | 883.4 |
| 1997 | 1 | HA15 | | | | | | 4.5 | 7.7 | 22.7 | 38.6 | 69.5 | 43.3 | 38.4 | 9.5 | | | 234.2 |
| 1997 | 1 | HA16 | | | | | | | | 1.8 | 4.5 | 14.0 | 24.0 | 16.0 | 4.5 | | | 65.0 |
| 1997 | 1 | HB-3 | | | | | | | | 3.8 | 9.5 | 29.3 | 50.3 | 33.5 | 9.4 | | | 135.8 |
| 1998 | 1 | HA17 | | | | | | | | | 1.8 | 4.5 | 14.0 | 24.0 | 16.0 | 4.5 | | 65.0 |
| 1998 | 1 | HA18 | | | | | | | | | 1.8 | 4.5 | 14.0 | 24.0 | 16.0 | 4.5 | | 65.0 |
| 1998 | 1 | HA19 | | | | | | | 8.8 | 14.9 | 44.1 | 74.8 | 134.8 | 83.9 | 74.4 | 18.3 | | 453.9 |

FOREIGN CONSTRUCTION COSTS (CONTD.)

| YEAR | # | PLANT | 1991 | 1992 | 1993 | 1994 | 1995 | 1996 | 1997 | 1998 | 1999 | 2000 | 2001 | 2002 | 2003 | 2004 | 2005 | SUM |
|---|---|---|---|---|---|---|---|---|---|---|---|---|---|---|---|---|---|---|
| 1999 | 1 | NUKE | 17.1 | 29.0 | 85.7 | 145.6 | 262.3 | 163.3 | 144.8 | 35.7 | | | | | | | | 893.4 |
| 1999 | 1 | HA20 | | | 1.8 | 4.5 | 14.0 | 24.0 | 16.0 | 4.5 | | | | | | | | 65.0 |
| 1999 | 1 | HA21 | 8.8 | 14.9 | 44.1 | 74.8 | 134.8 | 83.9 | 74.4 | 18.3 | | | | | | | | 453.9 |
| 2000 | 1 | NUKE | | 17.1 | 29.0 | 85.7 | 145.6 | 262.3 | 163.3 | 144.8 | 35.7 | | | | | | | 893.4 |
| 2001 | 1 | NUKE | | | 17.1 | 29.0 | 85.7 | 145.6 | 262.3 | 163.3 | 144.8 | 35.7 | | | | | | 893.4 |
| 2001 | 1 | HA22 | | | 8.8 | 14.9 | 44.1 | 74.8 | 134.8 | 83.9 | 74.4 | 18.3 | | | | | | 453.9 |
| 2002 | 1 | MCTH | | | | | | | | 5.9 | 29.5 | 54.2 | 23.0 | | | | | 112.5 |
| 2002 | 1 | HA23 | | | | 8.8 | 14.9 | 44.1 | 74.8 | 134.8 | 83.9 | 74.4 | 18.3 | | | | | 453.9 |
| 2003 | 1 | NUKE | | | | | 17.1 | 29.0 | 85.7 | 145.6 | 262.3 | 163.3 | 144.8 | 35.7 | | | | 893.4 |
| 2003 | 1 | HA24 | | | | | 12.1 | 20.5 | 60.8 | 103.2 | 185.9 | 115.7 | 102.6 | 25.3 | | | | 626.0 |
| 2004 | 1 | MCTH | | | | | | | | | | 5.9 | 29.5 | 54.2 | 23.0 | | | 112.5 |
| 2004 | 1 | ICFG | | | | | | | | | 13.7 | 56.8 | 128.1 | 132.9 | 43.0 | | | 374.4 |
| 2004 | 2 | V-GT | | | | | | | | | | | | 17.1 | 37.4 | | | 54.6 |
| 2005 | 1 | NUKE | | | | | | | 17.1 | 29.0 | 85.7 | 145.6 | 262.3 | 163.3 | 144.8 | 35.7 | | 883.4 |
| 2005 | 3 | V-GT | | | | | | | | | | | | | 25.7 | 56.2 | | 81.9 |
| 2005 | 1 | HA25 | | | | | | | 12.1 | 20.5 | 60.8 | 103.2 | 185.9 | 115.7 | 102.6 | 25.3 | | 626.0 |
| | 1 | MCTH | | | | | | | | | | | | | | | | |

DOMESTIC INT. DURING CONSTR.

| YEAR | # PLANT | 1984 | 1985 | 1986 | 1987 | 1988 | 1989 | 1990 | 1991 | 1992 | 1993 | 1994 | 1995 | 1996 | 1997 | 1998 | SUM |
|---|---|---|---|---|---|---|---|---|---|---|---|---|---|---|---|---|---|
| 1989 | 1 PPR2 | | 0.6 | 4.5 | 6.7 | 1.4 | | | | | | | | | | | 13.3 |
| 1990 | 1 HA-1 | 1.8 | 3.3 | 7.5 | 8.9 | 3.4 | 0.4 | | | | | | | | | | 25.4 |
| 1990 | 1 HA-2 | 1.8 | 3.3 | 7.5 | 8.9 | 3.4 | 0.4 | | | | | | | | | | 25.4 |
| 1991 | 1 PPR2 | | | | 0.6 | 4.5 | 6.7 | 1.4 | | | | | | | | | 13.3 |
| 1991 | 1 LAKH | | | 4.0 | 10.7 | 16.8 | 11.0 | 1.4 | | | | | | | | | 43.9 |
| 1991 | 1 HA-3 | | 1.8 | 3.3 | 7.5 | 3.9 | 3.4 | 0.4 | | | | | | | | | 25.4 |
| 1991 | 1 HA-4 | | 1.8 | 3.3 | 7.5 | 3.9 | 3.4 | 0.4 | | | | | | | | | 25.4 |
| 1992 | 2 MCTH | | | | | 4.5 | 15.9 | 18.0 | 3.2 | | | | | | | | 41.7 |
| 1992 | 1 HB-1 | | | 2.5 | 4.5 | 10.3 | 12.1 | 4.7 | 0.5 | | | | | | | | 34.6 |
| 1993 | 2 LAK2 | | | | | | 5.6 | 19.5 | 22.1 | 3.9 | | | | | | | 51.1 |
| 1993 | 1 CLI4 | | | | | 6.8 | 18.2 | 28.4 | 18.5 | 2.4 | | | | | | | 74.2 |
| 1994 | 1 DUKI | | | | | | 1.1 | 2.9 | 4.5 | 3.0 | 0.4 | | | | | | 11.8 |
| 1994 | 1 HA-5 | | | | | 1.8 | 3.3 | 7.5 | 8.9 | 3.4 | 0.4 | | | | | | 25.4 |
| 1994 | 1 HA-6 | | | | | 1.8 | 3.3 | 7.5 | 8.9 | 3.4 | 0.4 | | | | | | 25.4 |
| 1994 | 1 HA-7 | | | 4.1 | 5.1 | 13.5 | 17.4 | 23.0 | 10.3 | 5.2 | 0.5 | | | | | | 79.1 |
| 1994 | 1 HA-8 | | | 4.1 | 5.1 | 13.5 | 17.4 | 23.0 | 10.3 | 5.2 | 0.5 | | | | | | 79.1 |
| 1994 | 1 HA-9 | | | 4.1 | 5.1 | 13.5 | 17.4 | 23.0 | 10.3 | 5.2 | 0.5 | | | | | | 79.1 |
| 1995 | 1 CLI4 | | | | | | | 6.8 | 18.5 | 28.4 | 18.5 | 2.4 | | | | | 74.2 |
| 1995 | 1 HA10 | | | | 4.1 | 5.1 | 13.5 | 17.4 | 23.0 | 10.3 | 5.2 | 0.5 | | | | | 79.1 |
| 1995 | 1 HA11 | | | | 4.1 | 5.1 | 13.5 | 17.4 | 23.0 | 10.3 | 5.2 | 0.5 | | | | | 79.1 |
| 1995 | 1 HA12 | | | | | | 1.8 | 3.3 | 7.5 | 8.9 | 3.4 | 0.4 | | | | | 25.4 |
| 1995 | 1 HB-2 | | | | | | 1.0 | 1.9 | 4.3 | 5.1 | 2.0 | 0.2 | | | | | 14.5 |

DOMESTIC INT. DURING CONSTR. (CONTD.)

| YEAR | # | PLANT | 1991 | 1992 | 1993 | 1994 | 1995 | 1996 | 1997 | 1998 | 1999 | 2000 | 2001 | 2002 | 2003 | 2004 | 2005 | SUM |
|---|---|---|---|---|---|---|---|---|---|---|---|---|---|---|---|---|---|---|
| 1999 | 1 | NUKE | 6.4 | 7.9 | 20.7 | 26.7 | 35.4 | 15.9 | 8.0 | 0.7 | | | | | | | | 121.8 |
| 1999 | 1 | HA20 | | | 1.3 | 2.3 | 5.2 | 6.2 | 2.4 | 0.3 | | | | | | | | 17.6 |
| 1999 | 1 | HA21 | 8.0 | 10.0 | 26.1 | 33.6 | 44.5 | 20.0 | 10.1 | 0.9 | | | | | | | | 153.2 |
| 2000 | 1 | NUKE | | 6.4 | 7.9 | 20.7 | 26.7 | 35.4 | 15.9 | 8.0 | 0.7 | | | | | | | 121.8 |
| 2001 | 1 | NUKE | | | 6.4 | 7.9 | 20.7 | 26.7 | 35.4 | 15.9 | 8.0 | 0.7 | | | | | | 121.8 |
| 2001 | 1 | HA22 | | | 8.0 | 10.0 | 26.1 | 33.6 | 44.5 | 20.0 | 10.1 | 0.9 | | | | | | 153.2 |
| 2002 | 1 | MCTH | | | | | | | | 2.3 | 8.0 | 9.0 | 1.6 | | | | | 20.8 |
| 2002 | 1 | HA23 | | | | 8.0 | 10.0 | 26.1 | 33.6 | 44.5 | 20.0 | 10.1 | 0.9 | | | | | 153.2 |
| 2003 | 1 | NUKE | | | | | 6.4 | 7.9 | 20.7 | 26.7 | 35.4 | 15.9 | 8.0 | 0.7 | | | | 121.8 |
| 2003 | 1 | HA24 | | | | | 11.1 | 13.7 | 36.0 | 46.5 | 61.5 | 27.7 | 13.9 | 1.2 | | | | 211.6 |
| 2004 | 1 | MCTH | | | | | | | | | | 2.3 | 8.0 | 9.0 | 1.6 | | | 20.8 |
| 2004 | 1 | ICFG | | | | | | | | | 8.1 | 21.8 | 34.0 | 22.3 | 2.8 | | | 99.0 |
| 2004 | 2 | V-GT | | | | | | | | | | | | 2.1 | 2.3 | | | 4.4 |
| 2005 | 1 | NUKE | | | | | | | 6.4 | 7.9 | 20.7 | 26.7 | 35.4 | 15.9 | 8.0 | 0.7 | | 121.8 |
| 2005 | 3 | V-GT | | | | | | | | | | | | | 3.2 | 3.4 | | 6.6 |
| 2005 | 1 | HA25 | | | | | | | 11.1 | 13.7 | 36.0 | 46.5 | 61.5 | 27.7 | 13.9 | 1.2 | | 211.6 |

FOREIGN INT. DURING CONSTR.

| YEAR | # | PLANT | 1984 | 1985 | 1986 | 1987 | 1988 | 1989 | 1990 | 1991 | 1992 | 1993 | 1994 | 1995 | 1996 | 1997 | 1998 | SUM |
|---|---|---|---|---|---|---|---|---|---|---|---|---|---|---|---|---|---|---|
| 1989 | 1 | PPR2 | | 0.6 | 4.5 | 6.7 | 1.4 | | | | | | | | | | | 13.3 |
| 1990 | 1 | HA-1 | 2.0 | 3.5 | 8.2 | 9.6 | 3.7 | 0.4 | | | | | | | | | | 27.4 |
| 1990 | 1 | HA-2 | 2.0 | 3.5 | 8.2 | 9.6 | 3.7 | 0.4 | | | | | | | | | | 27.4 |
| 1991 | 1 | PPR2 | | | | 0.6 | 4.5 | 6.7 | 1.4 | | | | | | | | | 13.3 |
| 1991 | 1 | LAKH | | | 4.0 | 10.7 | 16.8 | 11.0 | 1.4 | | | | | | | | | 43.9 |
| 1991 | 1 | HA-3 | | 2.0 | 3.5 | 8.2 | 9.6 | 3.7 | 0.4 | | | | | | | | | 27.4 |
| 1991 | 1 | HA-4 | | 2.0 | 3.5 | 8.2 | 9.6 | 3.7 | 0.4 | | | | | | | | | 27.4 |
| 1992 | 2 | MCTH | | | | | 4.5 | 15.9 | 18.0 | 3.2 | | | | | | | | 41.7 |
| 1992 | 1 | HB-1 | | | 3.1 | 5.4 | 12.6 | 14.8 | 5.7 | 0.6 | | | | | | | | 42.2 |
| 1993 | 2 | LAK2 | | | | | | 5.6 | 19.5 | 22.1 | 3.9 | | | | | | | 51.1 |
| 1993 | 1 | CLIM | | | | | 6.8 | 18.2 | 28.4 | 18.5 | 2.4 | | | | | | | 74.2 |
| 1994 | 1 | DUK1 | | | | | | 1.1 | 2.9 | 4.5 | 3.0 | 0.4 | | | | | | 11.8 |
| 1994 | 1 | HA-5 | | | | | 2.0 | 3.5 | 8.2 | 9.6 | 3.7 | 0.4 | | | | | | 27.4 |
| 1994 | 1 | HA-6 | | | | | 2.0 | 3.5 | 8.2 | 9.6 | 3.7 | 0.4 | | | | | | 27.4 |
| 1994 | 1 | HA-7 | | | 5.1 | 6.3 | 16.4 | 21.2 | 28.1 | 12.6 | 6.4 | 0.6 | | | | | | 96.7 |
| 1994 | 1 | HA-8 | | | 5.1 | 6.3 | 16.4 | 21.2 | 28.1 | 12.6 | 6.4 | 0.6 | | | | | | 96.7 |
| 1994 | 1 | HA-9 | | | 5.1 | 6.3 | 16.4 | 21.2 | 28.1 | 12.6 | 6.4 | 0.6 | | | | | | 96.7 |
| 1995 | 1 | CLI1 | | | | | | | 6.8 | 18.2 | 28.4 | 18.5 | 2.4 | | | | | 74.2 |
| 1995 | 1 | HA10 | | | | 5.1 | 6.3 | 16.4 | 21.2 | 28.1 | 12.6 | 6.4 | 0.6 | | | | | 96.7 |
| 1995 | 1 | HA11 | | | | 5.1 | 6.3 | 16.4 | 21.2 | 28.1 | 12.6 | 6.4 | 0.6 | | | | | 96.7 |
| 1995 | 1 | HA12 | | | | | | 2.0 | 3.5 | 8.2 | 9.6 | 3.7 | 0.4 | | | | | 27.4 |
| 1995 | 1 | HB-2 | | | | | | 1.3 | 2.3 | 5.3 | 6.2 | 2.4 | 0.3 | | | | | 17.7 |

FOREIGN INT. DURING CONSTR. (CONTD.)

| YEAR | # | PLANT | 1991 | 1992 | 1993 | 1994 | 1995 | 1996 | 1997 | 1998 | 1999 | 2000 | 2001 | 2002 | 2003 | 2004 | 2005 | SUM |
|---|---|---|---|---|---|---|---|---|---|---|---|---|---|---|---|---|---|---|
| 1993 | 1 | NUKE | 19.1 | 23.7 | 62.0 | 80.1 | 106.0 | 47.7 | 24.0 | 2.1 | | | | | | | | 364.7 |
| 1999 | 1 | HA2J | | | 1.4 | 2.5 | 5.7 | 6.7 | 2.6 | 0.3 | | | | | | | | 19.0 |
| 1999 | 1 | HA2L | 9.8 | 12.2 | 31.9 | 41.1 | 54.5 | 24.5 | 12.3 | 1.1 | | | | | | | | 187.4 |
| 2000 | 1 | NUKE | | 19.1 | 23.7 | 62.0 | 80.1 | 106.0 | 47.7 | 24.0 | 2.1 | | | | | | | 364.7 |
| 2001 | 1 | NUKE | | | 19.1 | 23.7 | 62.0 | 80.1 | 106.0 | 47.7 | 24.0 | 2.1 | | | | | | 364.7 |
| 2001 | 1 | HA22 | | | 9.8 | 12.2 | 31.9 | 41.1 | 54.5 | 24.5 | 12.3 | 1.1 | | | | | | 187.4 |
| 2002 | 1 | MCTH | | | | | | | | 2.3 | 8.0 | 9.0 | 1.6 | | | | | 20.8 |
| 2002 | 1 | HA23 | | | | 9.8 | 12.2 | 31.9 | 41.1 | 54.5 | 24.5 | 12.3 | 1.1 | | | | | 187.4 |
| 2003 | 1 | NUKE | | | | | 19.1 | 23.7 | 62.0 | 80.1 | 106.0 | 47.7 | 24.0 | 2.1 | | | | 364.7 |
| 2003 | 1 | HA24 | | | | | 13.6 | 16.8 | 44.0 | 56.7 | 75.1 | 33.8 | 17.0 | 1.5 | | | | 258.5 |
| 2004 | 1 | MCTH | | | | | | | | | | 2.3 | 8.0 | 9.0 | 1.6 | | | 20.8 |
| 2004 | 1 | TCFG | | | | | | | | | 8.1 | 21.8 | 34.0 | 22.3 | 2.8 | | | 89.0 |
| 2004 | 2 | V-GT | | | | | | | | | | | | 2.3 | 2.5 | | | 4.8 |
| 2005 | 1 | NUKE | | | | | | | 19.1 | 23.7 | 62.0 | 80.1 | 106.0 | 47.7 | 24.0 | 2.1 | | 364.7 |
| 2005 | 3 | V-GT | | | | | | | | | | | | | 3.5 | 3.7 | | 7.2 |
| 2005 | 1 | HA25 | | | | | | | 13.6 | 16.8 | 44.0 | 56.7 | 75.1 | 33.8 | 17.0 | 1.5 | | 258.5 |

DOMESTIC CONSTRUCTION & IDC

| YEAR | # | PLANT | 1984 | 1985 | 1986 | 1987 | 1988 | 1989 | 1990 | 1991 | 1992 | 1993 | 1994 | 1995 | 1996 | 1997 | 1998 | SUM |
|---|---|---|---|---|---|---|---|---|---|---|---|---|---|---|---|---|---|---|
| 1989 | 1 | PPR2 | | 2.5 | 21.5 | 49.8 | 22.4 | | | | | | | | | | | 96.2 |
| 1990 | 1 | HA-1 | 4.3 | 9.3 | 26.2 | 40.9 | 24.8 | 6.4 | | | | | | | | | | 111.9 |
| 1990 | 1 | HA-2 | 4.3 | 9.3 | 26.2 | 40.9 | 24.8 | 6.4 | | | | | | | | | | 111.9 |
| 1991 | 1 | PPR2 | | | | 2.5 | 21.5 | 49.8 | 22.4 | | | | | | | | | 96.2 |
| 1991 | 1 | LAKH | | | 10.7 | 38.7 | 79.9 | 76.5 | 22.6 | | | | | | | | | 228.4 |
| 1991 | 1 | HA-3 | | 4.3 | 9.3 | 26.2 | 40.9 | 24.8 | 6.4 | | | | | | | | | 111.9 |
| 1991 | 1 | HA-4 | | 4.3 | 9.3 | 26.2 | 40.9 | 24.8 | 6.4 | | | | | | | | | 111.9 |
| 1992 | 2 | MCTH | | | | | 13.3 | 74.8 | 126.4 | 49.2 | | | | | | | | 266.7 |
| 1992 | 1 | HB-1 | | | 5.8 | 12.7 | 35.7 | 55.7 | 33.8 | 8.7 | | | | | | | | 152.5 |
| 1993 | 2 | LAK2 | | | | | | 19.9 | 91.8 | 155.1 | 60.3 | | | | | | | 327.1 |
| 1993 | 1 | CLIM | | | | | 18.2 | 65.5 | 135.1 | 129.3 | 38.2 | | | | | | | 386.2 |
| 1994 | 1 | DUKI | | | | | | 2.9 | 10.4 | 21.5 | 20.6 | 6.1 | | | | | | 61.5 |
| 1994 | 1 | HA-5 | | | | | 4.3 | 9.3 | 26.2 | 40.9 | 24.8 | 6.4 | | | | | | 111.9 |
| 1994 | 1 | HA-6 | | | | | 4.3 | 9.3 | 26.2 | 40.9 | 24.8 | 6.4 | | | | | | 111.9 |
| 1994 | 1 | HA-7 | | | 7.8 | 11.4 | 32.0 | 48.9 | 79.8 | 45.7 | 36.6 | 8.2 | | | | | | 270.6 |
| 1994 | 1 | HA-8 | | | 7.8 | 11.4 | 32.0 | 48.9 | 79.8 | 45.7 | 36.6 | 8.2 | | | | | | 270.6 |
| 1994 | 1 | HA-9 | | | 7.8 | 11.4 | 32.0 | 48.9 | 79.8 | 45.7 | 36.6 | 8.2 | | | | | | 270.6 |
| 1995 | 1 | CLIM | | | | | | | 18.2 | 65.5 | 135.1 | 129.3 | 38.2 | | | | | 386.2 |
| 1995 | 1 | HA10 | | | | 7.8 | 11.4 | 32.0 | 48.9 | 79.8 | 45.7 | 36.6 | 8.2 | | | | | 270.6 |
| 1995 | 1 | HA11 | | | | 7.8 | 11.4 | 32.0 | 48.9 | 79.8 | 45.7 | 36.6 | 8.2 | | | | | 270.6 |
| 1995 | 1 | HA12 | | | | | | 4.3 | 9.3 | 26.2 | 40.9 | 24.8 | 6.4 | | | | | 111.9 |
| 1995 | 1 | HB-2 | | | | | | 2.4 | 5.3 | 15.0 | 23.4 | 14.2 | 3.6 | | | | | 64.0 |
| 1996 | 1 | CLIM | | | | | | | | 18.2 | 65.5 | 135.1 | 129.3 | 38.2 | | | | 386.2 |
| 1996 | 1 | HA13 | | | | | 7.8 | 11.4 | 32.0 | 48.9 | 79.8 | 45.7 | 36.6 | 8.2 | | | | 270.6 |
| 1996 | 1 | HA14 | | | | | 7.8 | 11.4 | 32.0 | 48.9 | 79.8 | 45.7 | 36.6 | 8.2 | | | | 270.6 |
| 1997 | 1 | NUKE | | | | | | 12.1 | 17.6 | 49.4 | 75.4 | 123.0 | 70.5 | 56.4 | 12.6 | | | 416.9 |
| 1997 | 1 | HA15 | | | | | | 7.8 | 11.4 | 32.0 | 48.9 | 79.8 | 45.7 | 36.6 | 8.2 | | | 270.6 |
| 1997 | 1 | HA16 | | | | | | | | 3.0 | 6.5 | 18.2 | 28.4 | 17.2 | 4.4 | | | 77.7 |
| 1997 | 1 | HB-3 | | | | | | | | 5.5 | 12.0 | 33.7 | 52.6 | 31.9 | 8.2 | | | 143.8 |
| 1998 | 1 | HA17 | | | | | | | | | 3.0 | 6.5 | 18.2 | 28.4 | 17.2 | 4.4 | | 77.7 |
| 1998 | 1 | HA18 | | | | | | | | | 3.0 | 6.5 | 18.2 | 28.4 | 17.2 | 4.4 | | 77.7 |
| 1998 | 1 | HA19 | | | | | | | 15.2 | 22.1 | 62.1 | 94.8 | 154.7 | 88.6 | 70.9 | 15.9 | | 524.4 |



171

DOMESTIC CONSTRUCTION & IDC (CONTD.)

| YEAR | # | PLANT | 1991 | 1992 | 1993 | 1994 | 1995 | 1996 | 1997 | 1998 | 1999 | 2000 | 2001 | 2002 | 2003 | 2004 | 2005 | SUM |
|---|---|---|---|---|---|---|---|---|---|---|---|---|---|---|---|---|---|---|
| 1999 | 1 | NUKE | 12.1 | 17.6 | 49.4 | 75.4 | 123.0 | 70.5 | 56.4 | 12.6 | | | | | | | | 416.9 |
| 1999 | 1 | HA20 | | | 3.0 | 6.5 | 18.2 | 23.4 | 17.2 | 4.4 | | | | | | | | 77.7 |
| 1999 | 1 | HA21 | 15.2 | 22.1 | 62.1 | 94.8 | 154.7 | 88.6 | 70.9 | 15.9 | | | | | | | | 524.4 |
| 2000 | 1 | NUKE | | 12.1 | 17.6 | 49.4 | 75.4 | 123.0 | 70.5 | 56.4 | 12.6 | | | | | | | 416.9 |
| 2001 | 1 | NUKE | | | 12.1 | 17.6 | 49.4 | 75.4 | 123.0 | 70.5 | 56.4 | 12.6 | | | | | | 416.9 |
| 2001 | 1 | HA22 | | | 15.2 | 22.1 | 62.1 | 94.8 | 154.7 | 88.6 | 70.9 | 15.9 | | | | | | 524.4 |
| 2002 | 1 | MCTH | | | | | | | | 8.1 | 37.4 | 63.2 | 24.6 | | | | | 133.4 |
| 2002 | 1 | HA23 | | | | 15.2 | 22.1 | 62.1 | 94.8 | 154.7 | 88.6 | 70.9 | 15.9 | | | | | 524.4 |
| 2003 | 1 | NUKE | | | | | 12.1 | 17.6 | 49.4 | 75.4 | 123.0 | 70.5 | 56.4 | 12.6 | | | | 416.9 |
| 2003 | 1 | HA24 | | | | | 21.0 | 30.6 | 85.7 | 130.9 | 213.7 | 122.4 | 98.0 | 21.9 | | | | 724.2 |
| 2004 | 1 | MCTH | | | | | | | | | | 8.1 | 37.4 | 63.2 | 24.6 | | | 133.4 |
| 2004 | 1 | ICFG | | | | | | | | | 21.8 | 78.6 | 162.1 | 155.2 | 45.8 | | | 463.4 |
| 2004 | 2 | V-GT | | | | | | | | | | | | 18.0 | 36.9 | | | 54.8 |
| 2005 | 1 | NUKE | | | | | | | 12.1 | 17.6 | 49.4 | 75.4 | 123.0 | 70.5 | 56.4 | 12.6 | | 416.9 |
| 2005 | 3 | V-GT | | | | | | | | | | | | | 26.9 | 55.3 | | 82.3 |
| 2005 | 1 | HA25 | | | | | | | 21.0 | 30.6 | 85.7 | 130.9 | 213.7 | 122.4 | 98.0 | 21.9 | | 724.2 |



172

FOREIGN CONSTRUCTION & IDC

| YEAR | # | PLANT | 1984 | 1985 | 1986 | 1987 | 1988 | 1989 | 1990 | 1991 | 1992 | 1993 | 1994 | 1995 | 1996 | 1997 | 1998 | SUM |
|---|---|---|---|---|---|---|---|---|---|---|---|---|---|---|---|---|---|---|
| 1989 | 1 | PPR2 | | 2.5 | 21.5 | 49.8 | 22.4 | | | | | | | | | | | 96.2 |
| 1990 | 1 | HA-1 | 4.6 | 10.1 | 28.3 | 44.2 | 26.8 | 6.9 | | | | | | | | | | 121.0 |
| 1990 | 1 | HA-2 | 4.6 | 10.1 | 28.3 | 44.2 | 26.8 | 6.9 | | | | | | | | | | 121.0 |
| 1991 | 1 | PPR2 | | | | 2.5 | 21.5 | 49.8 | 22.4 | | | | | | | | | 96.2 |
| 1991 | 1 | LAK1 | | | 10.7 | 38.7 | 79.9 | 76.5 | 22.6 | | | | | | | | | 228.4 |
| 1991 | 1 | HA-3 | | 4.6 | 10.1 | 28.3 | 44.2 | 26.8 | 6.9 | | | | | | | | | 121.0 |
| 1991 | 1 | HA-4 | | 4.6 | 10.1 | 28.3 | 44.2 | 26.8 | 6.9 | | | | | | | | | 121.0 |
| 1992 | 2 | MCTH | | | | | 16.3 | 74.8 | 126.4 | 49.2 | | | | | | | | 266.7 |
| 1992 | 1 | HB-1 | | | 7.1 | 15.5 | 43.7 | 68.1 | 41.3 | 10.6 | | | | | | | | 186.3 |
| 1993 | 2 | LAK2 | | | | | | 19.9 | 91.8 | 155.1 | 60.3 | | | | | | | 327.1 |
| 1993 | 1 | CLI4 | | | | | 18.2 | 65.5 | 135.1 | 129.3 | 38.2 | | | | | | | 386.2 |
| 1994 | 1 | DUKI | | | | | | 2.9 | 10.4 | 21.5 | 20.6 | 6.1 | | | | | | 61.5 |
| 1994 | 1 | HA-5 | | | | | 4.6 | 10.1 | 28.3 | 44.2 | 26.8 | 6.9 | | | | | | 121.0 |
| 1994 | 1 | HA-6 | | | | | 4.6 | 10.1 | 28.3 | 44.2 | 26.8 | 6.9 | | | | | | 121.0 |
| 1994 | 1 | HA-7 | | | 9.6 | 14.0 | 39.2 | 59.8 | 97.6 | 55.9 | 44.8 | 10.0 | | | | | | 330.9 |
| 1994 | 1 | HA-8 | | | 9.6 | 14.0 | 39.2 | 59.8 | 97.6 | 55.9 | 44.8 | 10.0 | | | | | | 330.9 |
| 1994 | 1 | HA-9 | | | 9.6 | 14.0 | 39.2 | 59.8 | 97.6 | 55.9 | 44.8 | 10.0 | | | | | | 330.9 |
| 1995 | 1 | CLI4 | | | | | | | 18.2 | 65.5 | 135.1 | 129.3 | 38.2 | | | | | 386.2 |
| 1995 | 1 | HA10 | | | | 9.6 | 14.0 | 39.2 | 59.8 | 97.6 | 55.9 | 44.8 | 10.0 | | | | | 330.9 |
| 1995 | 1 | HA11 | | | | 9.6 | 14.0 | 39.2 | 59.8 | 97.6 | 55.9 | 44.8 | 10.0 | | | | | 330.9 |
| 1995 | 1 | HA12 | | | | | | 4.6 | 10.1 | 28.3 | 44.2 | 26.8 | 6.9 | | | | | 121.0 |
| 1995 | 1 | HB-2 | | | | | | 3.0 | 6.5 | 18.3 | 28.6 | 17.3 | 4.5 | | | | | 78.2 |
| 1996 | 1 | CLI4 | | | | | | | | 18.2 | 65.5 | 135.1 | 129.3 | 38.2 | | | | 386.2 |
| 1996 | 1 | HA13 | | | | | 9.6 | 14.0 | 39.2 | 59.8 | 97.6 | 55.9 | 44.8 | 10.0 | | | | 330.9 |
| 1996 | 1 | HA14 | | | | | 9.6 | 14.0 | 39.2 | 59.8 | 97.6 | 55.9 | 44.8 | 10.0 | | | | 330.9 |
| 1997 | 1 | NUKE | | | | | | 36.2 | 52.7 | 147.8 | 225.7 | 368.3 | 210.9 | 168.9 | 37.8 | | | 1248.2 |
| 1997 | 1 | HA15 | | | | | | 9.6 | 14.0 | 39.2 | 59.8 | 97.6 | 55.9 | 44.8 | 10.0 | | | 330.9 |
| 1997 | 1 | HA16 | | | | | | | | 3.2 | 7.0 | 19.7 | 30.7 | 18.6 | 4.8 | | | 84.0 |
| 1997 | 1 | HB-3 | | | | | | | | 6.7 | 14.6 | 41.2 | 64.2 | 38.9 | 10.0 | | | 175.6 |
| 1998 | 1 | HA17 | | | | | | | | | 3.2 | 7.0 | 19.7 | 30.7 | 18.6 | 4.8 | | 84.0 |
| 1998 | 1 | HA18 | | | | | | | | | 3.2 | 7.0 | 19.7 | 30.7 | 18.6 | 4.8 | | 84.0 |
| 1998 | 1 | HA19 | | | | | | | 18.6 | 27.1 | 75.9 | 116.0 | 189.3 | 108.4 | 86.8 | 19.4 | | 641.4 |

FOREIGN CONSTRUCTION & IDC (CONTD.)

| YEAR | # | PLANT | 1991 | 1992 | 1993 | 1994 | 1995 | 1996 | 1997 | 1998 | 1999 | 2000 | 2001 | 2002 | 2003 | 2004 | 2005 | SUM |
|---|---|---|---|---|---|---|---|---|---|---|---|---|---|---|---|---|---|---|
| 1999 | 1 | NUKE | 36.2 | 52.7 | 147.8 | 225.7 | 363.3 | 210.9 | 168.9 | 37.8 | | | | | | | | 1248.2 |
| 1999 | 1 | HA20 | | | 3.2 | 7.0 | 19.7 | 30.7 | 18.6 | 4.8 | | | | | | | | 84.0 |
| 1999 | 1 | HA21 | 18.6 | 27.1 | 75.9 | 116.0 | 189.3 | 108.4 | 86.8 | 19.4 | | | | | | | | 641.4 |
| 2000 | 1 | NUKE | | 36.2 | 52.7 | 147.8 | 225.7 | 368.3 | 210.9 | 168.9 | 37.8 | | | | | | | 1248.2 |
| 2001 | 1 | NUKE | | | 36.2 | 52.7 | 147.8 | 225.7 | 368.3 | 210.9 | 168.9 | 37.8 | | | | | | 1248.2 |
| 2001 | 1 | HA22 | | | 18.6 | 27.1 | 75.9 | 116.0 | 189.3 | 108.4 | 86.8 | 19.4 | | | | | | 641.4 |
| 2002 | 1 | MGTH | | | | | | | | 8.1 | 37.4 | 63.2 | 24.6 | | | | | 133.4 |
| 2002 | 1 | HA23 | | | | 18.6 | 27.1 | 75.9 | 116.0 | 189.3 | 108.4 | 86.8 | 19.4 | | | | | 641.4 |
| 2003 | 1 | NUKE | | | | | 36.2 | 52.7 | 147.8 | 225.7 | 368.3 | 210.9 | 168.9 | 37.8 | | | | 1248.2 |
| 2003 | 1 | HA24 | | | | | 25.6 | 37.3 | 104.7 | 159.9 | 261.0 | 149.5 | 119.7 | 26.8 | | | | 884.5 |
| 2004 | 1 | MGTH | | | | | | | | | 8.1 | 37.4 | 63.2 | 24.6 | | | | 133.4 |
| 2004 | 1 | ICFG | | | | | | | | | 21.8 | 78.6 | 162.1 | 155.2 | 45.8 | | | 463.4 |
| 2004 | 2 | V-GT | | | | | | | | | | | | 19.5 | 39.9 | | | 59.4 |
| 2005 | 1 | NUKE | | | | | | | 36.2 | 52.7 | 147.8 | 225.7 | 368.3 | 210.9 | 168.9 | 37.8 | | 1248.2 |
| 2005 | 3 | V-GT | | | | | | | | | | | | | 29.2 | 59.9 | | 89.1 |
| 2005 | 1 | HA25 | | | | | | | 25.6 | 37.3 | 104.7 | 159.9 | 261.0 | 149.5 | 119.7 | 26.8 | | 884.5 |

DOMESTIC FUEL INVESTMENT

| YEAR | # PLANT | 1989 | 1990 | 1991 | 1992 | 1993 | 1994 | 1995 | 1996 | 1997 | 1998 | 1999 | 2000 | 2001 | 2002 | 2003 | SUM |
|---|---|---|---|---|---|---|---|---|---|---|---|---|---|---|---|---|---|
| 1991 | 1 LAKH | 0.5 | 4.4 | | | | | | | | | | | | | | 4.9 |
| 1993 | 2 LAK2 | | | 1.0 | 8.9 | | | | | | | | | | | | 9.8 |
| 1994 | 1 DUKI | | | | 0.2 | 1.5 | | | | | | | | | | | 1.7 |

FOREIGN FUEL INVESTMENT

| YEAR | # | PLANT | 1987 | 1988 | 1989 | 1990 | 1991 | 1992 | 1993 | 1994 | 1995 | 1996 | 1997 | 1998 | 1999 | 2000 | 2001 | SUM |
|---|---|---|---|---|---|---|---|---|---|---|---|---|---|---|---|---|---|---|
| 1989 | 1 | PPR2 | 1.3 | 11.7 | | | | | | | | | | | | | | 13.0 |
| 1991 | 1 | PPR2 | | | 1.3 | 11.7 | | | | | | | | | | | | 13.0 |
| 1992 | 2 | MCTH | | | | 3.6 | 32.6 | | | | | | | | | | | 36.2 |
| 1993 | 1 | CLIM | | | | | 3.4 | 31.3 | | | | | | | | | | 34.7 |
| 1995 | 1 | CLIM | | | | | | | 3.4 | 31.3 | | | | | | | | 34.7 |
| 1996 | 1 | CLIM | | | | | | | | 3.4 | 31.3 | | | | | | | 34.7 |
| 1997 | 1 | NUKE | | | | | | | | | 11.7 | 107.1 | | | | | | 118.8 |
| 1999 | 1 | NUKE | | | | | | | | | | | 11.7 | 107.1 | | | | 118.8 |
| 2000 | 1 | NUKE | | | | | | | | | | | | 11.7 | 107.1 | | | 118.8 |
| 2001 | 1 | NUKE | | | | | | | | | | | | | 11.7 | 107.1 | | 118.8 |
| 2002 | 1 | MCTH | | | | | | | | | | | | | | 1.8 | 16.3 | 18.1 |

FOREIGN FUEL INVESTMENT (CONTD.)

| YEAR | # | PLANT | 2001 | 2002 | 2003 | 2004 | 2005 | SUM |
|---|---|---|---|---|---|---|---|---|
| 2003 | 1 | NUKE | 11.7 | 107.1 | | | | 118.8 |
| 2004 | 1 | MCTH | | 1.8 | 16.3 | | | 18.1 |
| 2004 | 1 | ICFG | | 3.6 | 32.6 | | | 36.2 |
| 2004 | 2 | V-GT | | 1.2 | 10.9 | | | 12.0 |
| 2005 | 1 | NUKE | | | 11.7 | 107.1 | | 118.8 |
| 2005 | 3 | V-GT | | | 1.8 | 16.3 | | 18.1 |

CAPITAL CASH FLOW SUMMARY

| YEAR | DOM. | FUEL FOR. | TOTAL | CONSTRUCTION DOM. | CONSTRUCTION FOR. | CONSTRUCTION TOTAL | IDC DOM. | IDC FOR. | IDC TOTAL | GR. TOT. |
|---|---|---|---|---|---|---|---|---|---|---|
| 1984 | 0.0 | 0.0 | 0.0 | 4.9 | 5.3 | 10.2 | 3.7 | 4.0 | 7.6 | 17.8 |
| 1985 | 0.0 | 0.0 | 0.0 | 18.9 | 20.3 | 39.2 | 10.8 | 11.7 | 22.5 | 61.6 |
| 1986 | 0.0 | 0.0 | 0.0 | 87.6 | 94.8 | 182.5 | 45.1 | 50.1 | 95.2 | 277.7 |
| 1987 | 0.0 | 1.3 | 1.3 | 208.8 | 224.7 | 433.6 | 79.1 | 88.0 | 167.1 | 602.0 |
| 1988 | 0.0 | 11.7 | 11.7 | 337.0 | 368.6 | 705.6 | 131.5 | 149.2 | 280.8 | 998.1 |
| 1989 | 0.5 | 1.3 | 1.8 | 499.1 | 559.1 | 1059.1 | 187.4 | 225.1 | 412.5 | 1472.4 |
| 1990 | 4.4 | 15.2 | 19.7 | 730.4 | 824.8 | 1555.2 | 255.8 | 306.6 | 562.4 | 2137.3 |
| 1991 | 1.0 | 36.0 | 37.0 | 827.1 | 978.8 | 1805.9 | 277.4 | 367.1 | 644.4 | 2487.3 |
| 1992 | 9.0 | 31.3 | 40.3 | 794.8 | 1014.8 | 1809.6 | 262.3 | 378.1 | 640.5 | 2490.4 |
| 1993 | 1.5 | 3.4 | 4.9 | 765.4 | 1111.3 | 1876.8 | 267.8 | 439.6 | 707.4 | 2589.1 |
| 1994 | 0.0 | 34.7 | 34.7 | 695.3 | 1059.9 | 1755.2 | 241.0 | 413.6 | 654.5 | 2444.4 |
| 1995 | 0.0 | 42.9 | 42.9 | 638.2 | 1150.0 | 1788.2 | 241.8 | 464.7 | 706.6 | 2537.7 |
| 1996 | 0.0 | 107.1 | 107.1 | 527.3 | 1013.0 | 1540.2 | 202.4 | 399.5 | 601.9 | 2249.3 |
| 1997 | 0.0 | 11.7 | 11.7 | 554.8 | 1073.4 | 1628.2 | 225.7 | 428.6 | 654.3 | 2294.1 |
| 1998 | 0.0 | 118.8 | 118.8 | 478.2 | 889.4 | 1367.6 | 187.5 | 333.7 | 521.2 | 2007.6 |
| 1999 | 0.0 | 118.8 | 118.8 | 578.8 | 1020.6 | 1599.4 | 239.7 | 415.6 | 655.3 | 2373.4 |
| 2000 | 0.0 | 108.9 | 108.9 | 534.1 | 847.8 | 1382.0 | 200.1 | 328.0 | 528.0 | 2018.9 |
| 2001 | 0.0 | 28.0 | 28.0 | 762.3 | 1187.0 | 1949.3 | 311.7 | 492.6 | 804.3 | 2781.6 |
| 2002 | 0.0 | 113.6 | 113.6 | 811.4 | 1142.3 | 1953.7 | 319.4 | 463.7 | 783.1 | 2850.4 |
| 2003 | 0.0 | 73.2 | 73.2 | 1161.3 | 1621.6 | 2782.9 | 421.5 | 608.4 | 1029.9 | 3886.0 |
| 2004 | 0.0 | 133.5 | 133.5 | 1095.3 | 1449.4 | 2544.7 | 374.3 | 516.8 | 891.1 | 3569.2 |
| 2005 | 0.0 | 104.7 | 104.7 | 1138.2 | 1573.4 | 2711.6 | 364.3 | 512.5 | 876.7 | 3693.0 |

# APPENDIX 3.2

## WASP-3
## COMPUTER GENERATED STUDY REPORT

## SECOND SERIES OF GENERATION PLANNING STUDIES

## ABREVIATIONS USED IN SECOND SERIES OF GENERATION PLANNING STUDIES

| Abrev. | Name |
|---|---|
| BSH1 | Basha #1 |
| BSH2 | Basha #2 |
| BSH3 | Basha #3 |
| BSH4 | Basha #4 |
| BUN1 | Bunji #1 |
| BUN2 | Bunji #2 |
| CLIM | Imported Coal |
| DAS1 | Dasu #1 |
| DAS2 | Dasu #2 |
| DAS3 | Dasu #3 |
| DAS4 | Dasu #4 |
| FDGT | Faislabad GT |
| FDST | Faislabad Stream |
| GUCC | Gudu Combined Cycle |
| GUGT | Gudu GT |
| GUD1 | Gudu #1 |
| GUD2 | Gudu #2 |
| GUD4 | Gudu Steam #4 |
| HA-1 | Tarbela #11 |
| HA-2 | Tarbela #12 |
| HA-3 | Tarbela #13 |
| HA-4 | Tarbela #14 |
| HA-5 | Tarbela #15 |
| HA-6 | Tarbela #16 |
| HA-7 | Kalabagh #1 |
| HA-8 | Kalabagh #2 |
| HA-9 | Kalabagh #3 |
| HA10 | Kalabagh #4 |
| HA11 | Kalabagh #5 |
| HA12 | Tarbela #17 |
| HA13 | Kalabagh #6 |
| HA14 | Kalabagh #7 |
| HA15 | Kalabagh #8 |
| HA16 | Kalabagh #9 |
| HA17 | Kalabagh #10 |
| HA18 | Kalabagh #11 |
| HA19 | Basha #1 |
| HA20 | Kalabagh #12 |
| HA21 | Basha #2 |
| HA22 | Basha #3 |
| HA23 | Basha #4 |
| HA24 | Dasu #1 |
| HA25 | Dasu #2 |
| HA26 | Dasu #3 |
| HA27 | Dasu #4 |
| HA28 | Thakot #1 |
| HB-1 | Low Head #2 |
| HB-2 | Low Head #3 |
| HB-3 | Low Head #4-5 |
| HB-4 | Bunji #1 |
| HB-5 | Bunji #2 |
| HOOL | Hyderabad Oil |
| HDST | Hyderabad Steam |
| HYD1 | Large Regulated Hdro |
| HYD2 | Small Hydro |
| ICFG | Imported Coal with Flue Gas Desulphurization |
| JOF1 | Jamshoro Oil #1 |
| JOF2 | Jamshoro Oil #2 |
| KACC | Kotadu Combined Cycle |
| KAGT | Kotadu GT |
| KANP | Kanuee Nuc. |
| KLB1 | Kalabagh #1 |
| KLB2 | Kalabagh #2 |
| KLB3 | Kalabagh #3 |
| KLB4 | Kalabagh #4 |
| KLB5 | Kalabagh #5 |
| KLB6 | Kalabagh #6 |
| KLB7 | Kalabagh #7 |
| KLB8 | Kalabagh #8 |
| KLB9 | Kalabagh #9 |
| KL10 | Kalabagh #10 |
| KL11 | Kalabagh #11 |
| KL12 | Kalabagh #12 |
| KOT1 | Kotri Steam #1 |
| KOT2 | Kotri Steam #2 |
| KTGT | Korangi GT |
| KTP1 | Korangi #1 |
| KTP2 | Korangi #2 |
| KWWS | West Wharf Steam |
| LAKH | Lakhra #1 |
| LAK2 | Lakhra #2-3 |
| LHH2 | Low Head #2 |
| LHH3 | Low Head #3 |
| LH45 | Low Head #4-5 |
| MESC | Multan Elec. |
| MNOL | Multan Steam |
| MNGA | Mangla |
| MN10 | Mangla #10 |
| MULT | Multan |
| NUKE | Nuclear |
| OIL1 | 210 MW Oil |
| OIL2 | 300 MW Oil |
| OIL3 | 600 MW Oil |
| PPR1 | Pipri Steam #1 |
| QTST | Quetta Steam |
| QTG1 | Quetta GT #1 |
| QTG2 | Quetta GT #2 |
| QTG3 | Quetta GT #3 |
| QTG4 | Quetta GT #4 |
| REMA | Remla |
| REPC | REPCo |
| RSHY | Run of River |
| SHG1 | Shadkra GT #1 |
| SHG2 | Shadkra GT #2 |
| SKST | Sukkur Steam |
| STGT | Sind Incl. Trade GT |
| TAR8 | Tarbela #8 |
| TA10 | Tarbela #9-10 |
| TB11 | Tarbeal #11 |
| TB12 | Tarbela #12 |
| TB13 | Tarbela #13 |
| TB14 | Tarbela #14 |
| TB15 | Tarbela #15 |
| TB16 | Tarbeal #16 |
| TB17 | Tarbela #17 |
| THK1 | Thakot #1 |
| V-GT | Combustion Turbine |
| WRSK | Warsak |





130

SUMMARY REPORT
ON A GENERATION EXPANSION PLAN FOR

PAKISTAN GENERATION PLANNING STUDY 1986 - 2005

PROCESSED BY THE WASP-III COMPUTER PROGRAM PACKAGE
OF THE IAEA

STUDY PERIOD

1986 - 2005

PLANNING PERIOD

1986 - 2005

CONSTRUCTION COSTS
IN MILLION $
ARE REPORTED ONLY FOR
PLANTS COMMISSIONED
DURING THE PLANNING PERIOD.
ALL OTHER INFORMATION IS GIVEN
FOR THE WHOLE STUDY PERIOD.



181

INFORMATION SUPPLIED BY USER :

PARTICIPANTS:

| | |
|---|---|
| [illegible] | NAPDA |
| [illegible] | NAPDA |
| [illegible] | NAPDA |
| [illegible] | NAPDA |
| [illegible] | SCIT |

THIS IS A LIST OF THE DIFFERENT TYPES OF ELECTRIC POWER PLANTS
USED IN THE STUDY.
THE NUMERIC CODES ARE USED BY THE COMPUTER PROGRAMS

| | | |
|---|---|---|
| 0 | COAL | COAL PLANTS |
| 1 | HSOP | HSO PLANTS |
| 2 | FOIL | FURNACE OIL PLANTS |
| 3 | GASF | GAS-FIRED PLANTS |
| 4 | NUCL | NUCLEAR PLANTS |
| | HYD1 | LARGE REGULATED HYDR |
| | HYD2 | SMALL HYDRO |

ANNUAL LOAD DESCRIPTION

PERIOD(S) PER YEAR : 1

| YEAR | PEAKLOAD MW | GR.RATE % | MIN.LOAD MW | GR.RATE % | ENERGY GWH | GR.RATE % | LOADFACTOR % |
|---|---|---|---|---|---|---|---|
| 1986 | 4540.0 | - | 1545.1 | - | 24324.9 | - | 61.08 |
| 1987 | 5067.0 | 9.0 | 1693.9 | 9.6 | 27216.4 | 9.6 | 61.08 |
| 1988 | 5561.0 | 9.7 | 1858.4 | 9.7 | 29359.4 | 9.7 | 61.08 |
| 1989 | 6251.0 | 12.0 | 2081.5 | 12.0 | 33444.0 | 12.0 | 61.08 |
| 1990 | 6970.0 | 11.5 | 2321.0 | 11.5 | 37290.8 | 11.5 | 61.08 |
| 1991 | 7755.0 | 11.0 | 2576.0 | 11.0 | 41389.0 | 11.0 | 61.08 |
| 1992 | 8551.0 | 10.5 | 2847.1 | 10.5 | 45744.1 | 10.5 | 61.08 |
| 1993 | 9350.0 | 9.1 | 3106.8 | 9.1 | 49917.2 | 9.1 | 61.08 |
| 1994 | 10160.0 | 8.9 | 3383.2 | 8.9 | 54357.9 | 8.9 | 61.08 |
| 1995 | 11043.0 | 8.7 | 3677.2 | 8.7 | 59082.1 | 8.7 | 61.08 |
| 1996 | 11977.0 | 8.5 | 3988.2 | 8.5 | 64079.2 | 8.5 | 61.08 |
| 1997 | 12964.0 | 8.2 | 4316.9 | 8.2 | 69359.7 | 8.2 | 61.08 |
| 1998 | 14004.0 | 8.0 | 4663.2 | 8.0 | 74923.9 | 8.0 | 61.08 |
| 1999 | 15096.0 | 7.8 | 5026.3 | 7.8 | 80786.3 | 7.8 | 61.08 |
| 2000 | 16240.0 | 7.6 | 5407.8 | 7.6 | 86886.9 | 7.6 | 61.08 |
| 2001 | 17435.0 | 7.4 | 5805.7 | 7.4 | 93280.4 | 7.4 | 61.08 |
| 2002 | 18683.0 | 7.1 | 6220.3 | 7.1 | 99941.4 | 7.1 | 61.08 |
| 2003 | 19973.0 | 6.9 | 6650.8 | 6.9 | 106859.2 | 6.9 | 61.08 |
| 2004 | 21311.0 | 6.7 | 7096.4 | 6.7 | 114017.7 | 6.7 | 61.08 |
| 2005 | 22692.0 | 6.5 | 7556.2 | 6.5 | 121406.3 | 6.5 | 61.08 |

FIXED SYSTEM
SUMMARY DESCRIPTION OF THERMAL PLANTS IN YEAR 1986

| No. | NAME | NO. OF SETS | MIN. LOAD MW | CAPA CITY MW | HEAT RATES KCAL/KWH BASE LOAD | HEAT RATES KCAL/KWH AVGE INCR | FUEL COSTS CENTS/ MILLION DMSTC | FUEL COSTS CENTS/ MILLION KCAL FORGN | FUEL TYPE | FAST SPIN RES % | FOR % | DAYS SCHL MAIN | MAIN LOAS MW | O&M (FIX) $/KWM | O&M (VAR) $/MWH |
|---|---|---|---|---|---|---|---|---|---|---|---|---|---|---|---|
| 3 | MJ01 | 4 | 25. | 60. | 3148. | 2552. | 0.0 | 1750.0 | 2 | 11 | 5.0 | 30 | 70. | 0.40 | 0.67 |
| 4 | FJ01 | 2 | 30. | 50. | 2961. | 2813. | 0.0 | 1750.0 | 2 | 11 | 5.0 | 30 | 70. | 0.34 | 0.97 |
| 5 | FJ01 | 3 | 20. | 25. | 4300. | 3130. | 0.0 | 2625.0 | 1 | 20 | 15.0 | 20 | 30. | 0.56 | 2.07 |
| 6 | SR01 | 2 | 4. | 10. | 4773. | 3432. | 0.0 | 2625.0 | 1 | 20 | 15.0 | 20 | 30. | 0.45 | 3.72 |
| 7 | SR02 | 4 | 4. | 13. | 4773. | 3432. | 0.0 | 2625.0 | 1 | 20 | 15.0 | 20 | 30. | 0.45 | 3.72 |
| 8 | GJ01 | 2 | 70. | 110. | 2355. | 2268. | 1750.0 | 0.0 | 3 | 11 | 5.0 | 30 | 150. | 0.42 | 1.31 |
| 9 | GJ02 | 1 | 100. | 210. | 2000. | 2102. | 1750.0 | 0.0 | 3 | 11 | 5.0 | 30 | 225. | 0.42 | 1.31 |
| 10 | SR01 | 4 | 6. | 12. | 3731. | 3425. | 1750.0 | 0.0 | 3 | 11 | 4.0 | 30 | 30. | 0.87 | 1.89 |
| 11 | HD01 | 2 | 4. | 7. | 5925. | 5179. | 1750.0 | 0.0 | 3 | 11 | 4.0 | 30 | 30. | 0.87 | 1.89 |
| 12 | HD02 | 2 | 4. | 7. | 5750. | 4817. | 1750.0 | 0.0 | 3 | 11 | 5.0 | 25 | 30. | 0.87 | 1.89 |
| 13 | KT01 | 2 | 12. | 15. | 4778. | 3195. | 1750.0 | 0.0 | 3 | 20 | 4.0 | 25 | 30. | 0.69 | 2.42 |
| 14 | KT02 | 4 | 20. | 25. | 4300. | 3180. | 1750.0 | 0.0 | 3 | 20 | 4.0 | 29 | 30. | 0.69 | 2.42 |
| 15 | QI01 | 2 | 4. | 8. | 4550. | 3860. | 625.0 | 0.0 | 0 | 20 | 5.0 | 30 | 30. | 0.45 | 4.00 |
| 16 | QI01 | 1 | 2. | 5. | 4800. | 3432. | 0.0 | 2625.0 | 1 | 11 | 15.0 | 20 | 30. | 0.45 | 4.00 |
| 17 | QI02 | 1 | 4. | 10. | 4800. | 3432. | 0.0 | 2625.0 | 1 | 11 | 15.0 | 20 | 30. | 0.45 | 4.00 |
| 18 | QI03 | 1 | 10. | 20. | 4300. | 3432. | 0.0 | 2625.0 | 1 | 11 | 15.0 | 20 | 30. | 0.45 | 4.00 |
| 19 | SI01 | 3 | 10. | 20. | 4300. | 3180. | 0.0 | 2625.0 | 1 | 20 | 15.0 | 20 | 30. | 0.45 | 3.00 |
| 20 | KI01 | 4 | 10. | 20. | 4300. | 3130. | 0.0 | 2625.0 | 1 | 20 | 15.0 | 20 | 30. | 0.45 | 3.00 |
| 21 | KI01 | 2 | 25. | 50. | 3758. | 2673. | 0.0 | 1750.0 | 2 | 11 | 5.0 | 30 | 70. | 0.50 | 2.30 |
| 22 | KI02 | 2 | 50. | 125. | 2978. | 2471. | 0.0 | 1750.0 | 2 | 11 | 5.0 | 30 | 150. | 0.50 | 2.30 |
| 23 | PP01 | 2 | 85. | 210. | 2647. | 2316. | 0.0 | 1750.0 | 2 | 11 | 8.0 | 35 | 225. | 0.50 | 2.30 |
| 24 | KA01 | 1 | 70. | 150. | 2838. | 2528. | 210.0 | 0.0 | 4 | 11 | 10.0 | 45 | 150. | 1.00 | 2.50 |
| 25 | KA05 | 2 | 12. | 35. | 4227. | 3454. | 0.0 | 1750.0 | 2 | 11 | 5.0 | 30 | 70. | 0.50 | 2.30 |
| 26 | QI04 | 1 | 22. | 26. | 4300. | 3432. | 0.0 | 2625.0 | 1 | 11 | 15.0 | 30 | 30. | 0.50 | 2.30 |
| 27 | KA01 | 3 | 100. | 150. | 3135. | 3135. | 0.0 | 2625.0 | 1 | 0 | 20.0 | 30 | 150. | 0.45 | 3.00 |
| 28 | KA02 | 3 | 200. | 300. | 3135. | 0. | 0.0 | 2625.0 | 1 | 0 | 20.0 | 30 | 150. | 0.45 | 3.00 |
| 29 | GJ01 | 3 | 75. | 75. | 3135. | 3135. | 1750.0 | 0.0 | 3 | 0 | 15.0 | 30 | 150. | 0.45 | 3.00 |
| 30 | GJ02 | 3 | 150. | 225. | 3135. | 0. | 1750.0 | 0.0 | 3 | 11 | 15.0 | 30 | 225. | 0.45 | 3.00 |
| 31 | GJ04 | 3 | 120. | 230. | 2600. | 2300. | 1750.0 | 0.0 | 3 | 11 | 5.0 | 30 | 225. | 0.42 | 1.31 |
| 32 | JOF1 | 3 | 150. | 230. | 2600. | 2300. | 0.0 | 1750.0 | 2 | 11 | 8.0 | 30 | 225. | 0.50 | 2.30 |

FIXED SYSTEM (CONTD.)
SUMMARY DESCRIPTION OF THERMAL PLANTS IN YEAR 1986

| NO. | NAME | NO. OF UNITS | AVG. UNIT LOAD MW | CAPACITY MW | HEAT RATES KCAL/KWH BASE LOAD | HEAT RATES KCAL/KWH WASTE FACTOR | FUEL COSTS CENTS/ MILLION BASIC | FUEL COSTS CENTS/ KCAL FORCED | FUEL TYPE | FAST SPIN RES % | FOR % | DAYS SCHD MAIN | MAIN CLAS MW | O&M (FIX) $/KWM | O&M (VAR) $/MWH |
|---|---|---|---|---|---|---|---|---|---|---|---|---|---|---|---|
| 33 | [illegible] | 3 | 120. | 210. | 2600. | 2300. | 0.0 | 1750.0 | 2 | 11 | 8.0 | 30 | 225. | 0.50 | 2.30 |
| 34 | [illegible] | 3 | 120. | 210. | 2600. | 2300. | 0.0 | 1750.0 | 2 | 11 | 8.0 | 30 | 225. | 0.50 | 2.30 |
| 35 | [illegible] | 1 | 3. | 4. | 3333. | 3290. | 1750.0 | 0.0 | 3 | 11 | 8.0 | 30 | 30. | 0.87 | 1.89 |
| 36 | [illegible] | 2 | 4. | 10. | 4400. | 3040. | 1750.0 | 0.0 | 3 | 11 | 8.0 | 30 | 30. | 0.69 | 2.42 |

FIXED SYSTEM
SUMMARY DESCRIPTION OF COMPOSITE HYDROELECTRIC PLANT TYPE HYD1
*** CAPACITY IN MW * ENERGY IN GWH ***
FIXED O&M COSTS : 1.590 $/KW-MONTH

| YEAR | P O R T | | HYDROCONDITION 1 PROB.: 0.23 CAPACITY BASE | CAPACITY PEAK | ENERGY | HYDROCONDITION 2 PROB.: 0.55 CAPACITY BASE | CAPACITY PEAK | ENERGY | HYDROCONDITION 3 PROB.: 0.17 CAPACITY BASE | CAPACITY PEAK | ENERGY |
|---|---|---|---|---|---|---|---|---|---|---|---|
| 1976 | 1 | 1 | 1173. | 1. | 1721. | 1656. | 2. | 2420. | 1976. | 1. | 2886. |
| | | 2 | 1439. | 477. | 2291. | 1953. | 659. | 2392. | 1559. | 418. | 2378. |
| | | 3 | 1249. | 556. | 1941. | 1317. | 479. | 2034. | 1300. | 456. | 2014. |
| | | 4 | 356. | 512. | 1252. | 841. | 537. | 1522. | 862. | 566. | 1337. |
| | | 5 | 333. | 231. | 979. | 675. | 150. | 1027. | 745. | 91. | 1112. |
| | | 6 | 330. | 2. | 357. | 951. | 5. | 951. | 900. | 1. | 1315. |
| | | INST.CAP. | 1750. | | | | | | | | |
| | | TOTAL ENERGY | | | 9071. | | | 10146. | | | 11042. |



187

FIXED SYSTEM
SUMMARY DESCRIPTION OF COMPOSITE HYDROELECTRIC PLANT TYPE HYDR
*** CAPACITY IN MW * ENERGY IN GWH ***
FIXED SYS COSTS : 1.590 $/KW-MONTH

| YEAR | PROJ | HYDROCONDITION 1 PROB.: 0.28 CAPACITY BASE | CAPACITY PEAK | ENERGY | HYDROCONDITION 2 PROB.: 0.55 CAPACITY BASE | CAPACITY PEAK | ENERGY | HYDROCONDITION 3 PROB.: 0.17 CAPACITY BASE | CAPACITY PEAK | ENERGY |
|---|---|---|---|---|---|---|---|---|---|---|
| 1980 | 1 | 555. | 552. | 637. | 839. | 320. | 1495. | 1114. | 104. | 1777. |
| | 2 | 494. | 650. | 875. | 715. | 403. | 1205. | 681. | 241. | 1427. |
| | 3 | 512. | 509. | 678. | 555. | 471. | 929. | 590. | 423. | 1003. |
| | 4 | 452. | 426. | 736. | 435. | 335. | 830. | 579. | 342. | 966. |
| | 5 | 475. | 452. | 717. | 630. | 258. | 1110. | 913. | 173. | 1439. |
| | 6 | 474. | 572. | 927. | 930. | 217. | 1523. | 1109. | 103. | 1770. |
| | INST.CAP. | 1156. | | | | | | | | |
| | TOTAL ENERGY | | | 5539. | | | 7096. | | | 8382. |
| 1989 | 1 | 519. | 1062. | 652. | 954. | 480. | 1629. | 1306. | 156. | 2066. |
| | 2 | 494. | 660. | 870. | 635. | 532. | 1225. | 876. | 452. | 1501. |
| | 3 | 455. | 737. | 673. | 987. | 594. | 926. | 541. | 645. | 997. |
| | 4 | 411. | 613. | 730. | 930. | 576. | 834. | 536. | 542. | 959. |
| | 5 | 501. | 590. | 711. | 955. | 425. | 1029. | 1030. | 252. | 1630. |
| | 6 | 578. | 760. | 879. | 1017. | 336. | 1684. | 1325. | 106. | 2087. |
| | INST.CAP. | 1345. | | | | | | | | |
| | TOTAL ENERGY | | | 6967. | | | 7325. | | | 9240. |



186

FIXED SYSTEM
HISTORICAL ADDITIONS AND RETIREMENTS

NUMBER OF SETS ADDED AND RETIRED(-)
1986 - 2005

YEAR: 19.. (200./20..)

| NO. | NAME | 88 | 89 | 90 | 91 | 92 | 93 | 94 | 95 | 96 | 97 | 98 | 99 | 0 | 1 | 2 | 3 | 4 | 5 |
|---|---|---|---|---|---|---|---|---|---|---|---|---|---|---|---|---|---|---|---|
| 3 | MDL1 | | | | -2 | | | | -2 | | | | | | | | | | |
| 4 | MDS1 | | | | | | | | | | | -1 | -1 | | | | | | |
| 5 | MDS2 | | | | | | | | | | | | | | | -8 | | | |
| 6 | STS1 | | | | | -2 | | | | | | | | | | | | | |
| 7 | STS2 | | | | | | | | | -4 | | | | | | | | | |
| 8 | SDD1 | | | | | | | | | | | | | | | | | | -2 |
| 10 | SKS1 | | | | | | | | | -2 | | -2 | | | | | | | |
| 11 | HDS1 | | | | -2 | | | | | | | | | | | | | | |
| 12 | HDDL | | | | | | | | | -2 | | | | | | | | | |
| 13 | KDT1 | | | | | | | | | -2 | | | | | | | | | |
| 14 | KDT2 | | | | | | | | | | | | | | | | | | -2 |
| 15 | QLST | | | | | | | | -2 | | | | | | | | | | |
| 16 | QLS1 | | | | | | | | | | | -1 | | | | | | | |
| 17 | QLS2 | | | | | | -1 | | | | | | | | | | | | |
| 18 | QLSS | | | | | | | | | | | | | | -1 | | | | |
| 21 | KLP1 | | | | | | | | | | -2 | | | | | | | | |
| 22 | KLP2 | | | | | | | | | | | | | | -1 | | | | |
| 25 | KWS5 | | | | -2 | | | | | | | | | | | | | | |
| 27 | MAS1 | * | | | -4 | | | | | | | | | | | | | | |
| 28 | KAOO | | | | 2 | | | | | | | | | | | | | | |
| 29 | SDS1 | * | -2 | | | | | | | | | | | | | | | | |
| 30 | GDOO | | 2 | | | | | | | | | | | | | | | | |
| 31 | GDD4 | 1 | | | | | | | | | | | | | | | | | |
| 32 | DDF1 | | | 1 | | | | | | | | | | | | | | | |
| 33 | DDF2 | | | | 1 | | | | | | | | | | | | | | |
| 34 | TWDL | | | 1 | 2 | | | | | | | | | | | | | | |
| 35 | KEPO | | | | | -1 | | | | | | | | | | | | | |
| 36 | MLSO | | | | | -2 | | | | | | | | | | | | | |



181

FIXED SYSTEM
SUMMARY OF INSTALLED CAPACITIES
(TERMINAL CAPACITIES (MW))

| YEAR | HYDROELECTRIC HY01 PK. | HY01 CAP | HY02 PK. | HY02 CAP | THERMAL FUEL TYPE 0 COAL | 1 HSOP | 2 FOIL | 3 GAS | 4 NUCL | TOTAL |
|---|---|---|---|---|---|---|---|---|---|---|
| 1946 | 1 | 1750. | 4 | 1150. | 16. | 515. | 1228. | 665. | 130. | 5460. |
| 1947 | | | | | 16. | 915. | 1228. | 1165. | 130. | 6360. |
| 1948 | | | | | 16. | 915. | 1228. | 1315. | 130. | 6510. |
| 1949 | 1 | 1750. | 6 | 1543. | 16. | 915. | 1668. | 1315. | 130. | 7159. |
| 1950 | | | | | 16. | 915. | 2318. | 1315. | 130. | 7789. |
| 1951 | | | | | 16. | 1115. | 2132. | 1201. | 130. | 7789. |
| 1952 | | | | | 16. | 1075. | 2132. | 1272. | 130. | 7740. |
| 1953 | | | | | 16. | 1055. | 2132. | 1272. | 130. | 7730. |
| 1954 | | | | | 0. | 1085. | 2012. | 1272. | 130. | 7594. |
| 1955 | | | | | 0. | 1055. | 2012. | 1204. | 130. | 7474. |
| 1956 | | | | | 0. | 1033. | 1880. | 1204. | 130. | 7342. |
| 1957 | | | | | 0. | 1028. | 1820. | 1180. | 130. | 7253. |
| 1958 | | | | | 0. | 1028. | 1760. | 1180. | 130. | 7193. |
| 2001 | | | | | 0. | 1008. | 1635. | 1180. | 130. | 7048. |
| 2002 | | | | | 0. | 808. | 1635. | 1180. | 130. | 6848. |
| 2003 | | | | | 0. | 808. | 1635. | 910. | 130. | 6578. |



190

VARIABLE SYSTEM
SUMMARY DESCRIPTION OF THERMAL PLANTS

| NO. | NAME | NO. OF SETS | MIN. LOAD MW | CAPA CITY MW | HEAT RATES KCAL/KWH BASE LOAD | HEAT RATES KCAL/KWH AVG INCR | FUEL COSTS CENTS/ MILLION BASIC | FUEL COSTS CENTS/ KCAL FORCN | FUEL TYPE | FAST SPIN RES % | FOR % | DAYS SCHL MAIN | MAIN CLAS MW | O&M (FIX) $/KWM | O&M (VAR) $/MWH |
|---|---|---|---|---|---|---|---|---|---|---|---|---|---|---|---|
| 1 | WCL1 | 0 | 85. | 210. | 2647. | 2316. | 0.0 | 1750.0 | 2 | 11 | 8.0 | 35 | 225. | 0.50 | 2.30 |
| 2 | OLC2 | 0 | 180. | 300. | 2535. | 2170. | 0.0 | 1750.0 | 2 | 11 | 10.0 | 40 | 300. | 0.50 | 2.30 |
| 3 | LAGH | 0 | 180. | 300. | 2929. | 2302. | 625.0 | 0.0 | 0 | 11 | 13.5 | 40 | 300. | 0.87 | 2.30 |
| 4 | LAK2 | 0 | 150. | 300. | 3130. | 2473. | 625.0 | 0.0 | 0 | 11 | 15.0 | 45 | 300. | 1.74 | 4.65 |
| 5 | HLC3 | 0 | 300. | 300. | 2516. | 2150. | 0.0 | 1750.0 | 2 | 11 | 14.2 | 40 | 600. | 0.50 | 2.30 |
| 6 | CCTM | 0 | 400. | 600. | 2625. | 2046. | 0.0 | 825.0 | 0 | 11 | 17.0 | 40 | 600. | 0.78 | 2.30 |
| 7 | TCF3 | 0 | 400. | 600. | 2733. | 2142. | 0.0 | 825.0 | 0 | 11 | 19.5 | 52 | 600. | 1.56 | 4.60 |
| 8 | NUCL | 0 | 450. | 900. | 2750. | 2430. | 0.0 | 210.0 | 4 | 11 | 22.0 | 61 | 900. | 1.00 | 2.50 |
| 9 | V-S1 | 0 | 100. | 100. | 3165. | 3185. | 0.0 | 2625.0 | 1 | 0 | 20.0 | 12 | 150. | 0.45 | 3.00 |



191

VARIABLE SYSTEM
SUMMARY DESCRIPTION OF COMPOSITE HYDROELECTRIC PLANT TYPE HYDI
*** CAPACITY IN MW * ENERGY IN GWH ***
FIXED O&M COSTS : 1.590 $/KW-MONTH

| YEAR | P R O B | | HYDROCONDITION 1 PROB.: 0.23 CAPACITY BASE | PEAK | ENERGY | HYDROCONDITION 2 PROB.: 0.55 CAPACITY BASE | PEAK | ENERGY | HYDROCONDITION 3 PROB.: 0.17 CAPACITY BASE | PEAK | ENERGY |
|---|---|---|---|---|---|---|---|---|---|---|---|
| 1970 | 1 | 1 | 625. | 1. | 523. | 373. | 3. | 546. | 372. | 1. | 544. |
| | | 2 | 32. | 322. | 152. | +9. | 324. | 147. | 133. | 239. | 243. |
| | | 3 | -77. | 333. | -15. | -54. | 333. | 4. | -71. | 336. | -5. |
| | | 4 | -52. | 270. | -10. | -52. | 271. | -10. | -57. | 271. | -5. |
| | | 5 | -38. | 167. | -6. | -35. | 174. | 1. | -38. | 192. | 0. |
| | | 6 | 129. | 33. | 176. | 155. | 47. | 238. | 320. | 87. | 489. |
| | | INSTL.CAP. | 652. | | | | | | | | |
| | | TOTAL ENERGY | | | 962. | | | 926. | | | 1271. |
| 1970 | 2 | 1 | 352. | 2. | 1246. | 745. | 7. | 1092. | 744. | 2. | 1088. |
| | | 2 | 134. | 344. | 304. | 37. | 349. | 294. | 266. | 478. | 496. |
| | | 3 | -155. | 375. | -25. | -127. | 375. | 8. | -142. | 672. | -10. |
| | | 4 | -125. | 341. | -20. | -125. | 343. | -20. | -114. | 542. | -10. |
| | | 5 | -75. | 333. | -12. | -70. | 348. | 2. | -77. | 385. | 0. |
| | | 6 | 253. | 66. | 392. | 310. | 94. | 476. | 640. | 174. | 978. |
| | | INSTL.CAP. | 364. | | | | | | | | |
| | | TOTAL ENERGY | | | 1634. | | | 1852. | | | 2542. |
| 1971 | 3 | 1 | 1273. | 3. | 1869. | 1113. | 10. | 1638. | 1116. | 3. | 1632. |
| | | 2 | 133. | 968. | 456. | 146. | 973. | 441. | 399. | 717. | 744. |
| | | 3 | -252. | 1099. | -39. | -191. | 1013. | 12. | -214. | 1009. | -15. |
| | | 4 | -137. | 811. | -30. | -137. | 814. | -30. | -171. | 813. | -15. |
| | | 5 | -115. | 900. | -18. | -105. | 522. | 3. | -115. | 577. | 0. |
| | | 6 | 350. | 100. | 568. | 454. | 142. | 714. | 960. | 261. | 1467. |
| | | INSTL.CAP. | 1278. | | | | | | | | |
| | | TOTAL ENERGY | | | 2828. | | | 2778. | | | 3813. |



192

VARIABLE SYSTEM (CONTD.)
SUMMARY DESCRIPTION OF COMPOSITE HYDROELECTRIC PLANT TYPE HYDR
*** CAPACITY IN MW * ENERGY IN GWH ***
FIXED O&M COSTS : 1.590 $/KW-MONTH

| YEAR | P R O J E C T | | HYDROCONDITION 1 PROB.: 0.23 CAPACITY BASE | CAPACITY PEAK | ENERGY | HYDROCONDITION 2 PROB.: 0.55 CAPACITY BASE | CAPACITY PEAK | ENERGY | HYDROCONDITION 3 PROB.: 0.17 CAPACITY BASE | CAPACITY PEAK | ENERGY |
|---|---|---|---|---|---|---|---|---|---|---|---|
| 1991 | 4 | 1 | 1754. | 4. | 2492. | 1490. | 14. | 2184. | 1468. | 4. | 2176. |
| | | 2 | 208. | 1268. | 608. | 195. | 1297. | 588. | 532. | 956. | 792. |
| | | 3 | -320. | 1540. | -52. | -255. | 1351. | 16. | -235. | 1345. | -20. |
| | | 4 | -249. | 1031. | -40. | -249. | 1035. | -40. | -227. | 1083. | -20. |
| | | 5 | -151. | 667. | -24. | -140. | 696. | 4. | -153. | 769. | 0. |
| | | 6 | 515. | 153. | 734. | 619. | 139. | 952. | 1279. | 349. | 1956. |
| | INST.CAP. 1728. | | | | | | | | | | |
| | TOTAL ENERGY | | | | 3766. | | | 3704. | | | 5084. |
| 1992 | 5 | 1 | 1965. | 74. | 2900. | 1734. | 61. | 2659. | 1860. | 5. | 2720. |
| | | 2 | 151. | 1000. | 640. | 154. | 1070. | 629. | 585. | 1276. | 1146. |
| | | 3 | -372. | 1681. | -36. | -333. | 1588. | 3. | -363. | 1681. | -34. |
| | | 4 | -314. | 1555. | -31. | -314. | 1357. | -52. | -292. | 1355. | -32. |
| | | 5 | -158. | 635. | -29. | -177. | 665. | -1. | -192. | 947. | -4. |
| | | 6 | 555. | 236. | 859. | 651. | 319. | 1029. | 1224. | 623. | 2083. |
| | INST.CAP. 2160. | | | | | | | | | | |
| | TOTAL ENERGY | | | | 4253. | | | 4267. | | | 5884. |
| 1993 | 6 | 1 | 2155. | 145. | 3308. | 2078. | 103. | 3134. | 2232. | 6. | 3264. |
| | | 2 | 124. | 2032. | 672. | 114. | 2042. | 670. | 638. | 1596. | 1300. |
| | | 3 | -475. | 2017. | -30. | -411. | 2025. | -10. | -441. | 2017. | -48. |
| | | 4 | -373. | 1624. | -62. | -378. | 1628. | -64. | -356. | 1626. | -44. |
| | | 5 | -225. | 1000. | -34. | -215. | 1035. | -6. | -232. | 1126. | -8. |
| | | 6 | 535. | 339. | 754. | 532. | 450. | 1106. | 1168. | 898. | 2220. |
| | INST.CAP. 2592. | | | | | | | | | | |
| | TOTAL ENERGY | | | | 4738. | | | 4830. | | | 6684. |



193

VARIABLE SYSTEM (CONTD.)
SUMMARY DESCRIPTION OF COMPOSITE HYDROELECTRIC PLANT TYPE HYDL
*** CAPACITY IN MW * ENERGY IN GWH ***
FIXED O&M COSTS : 1.590 $/KW-MONTH

| YEAR | P R O D | HYDROCONDITION 1 PROB.: 0.23 CAPACITY BASE | CAPACITY PEAK | ENERGY | HYDROCONDITION 2 PROB.: 0.55 CAPACITY BASE | CAPACITY PEAK | ENERGY | HYDROCONDITION 3 PROB.: 0.17 CAPACITY BASE | CAPACITY PEAK | ENERGY |
|---|---|---|---|---|---|---|---|---|---|---|
| 1984 | 1 | 2379. | 145. | 3592. | 2355. | 100. | 3463. | 2477. | 8. | 3624. |
| | 2 | 163. | 2301. | 318. | 255. | 2234. | 936. | 854. | 1743. | 1619. |
| | 3 | -351. | 2224. | 151. | -237. | 2232. | 221. | -317. | 2224. | 183. |
| | 4 | -277. | 1832. | 79. | -302. | 1839. | 96. | -277. | 1834. | 117. |
| | 5 | -149. | 1159. | 118. | -111. | 1167. | 178. | -122. | 1252. | 183. |
| | 6 | 726. | 570. | 1137. | 832. | 463. | 1329. | 1320. | 904. | 2443. |
| | INST.CAP. | 2392. | | | | | | | | |
| | TOTAL ENERGY | | | 5915. | | | 6223. | | | 8169. |
| 1985 | 1 | 2575. | 147. | 3676. | 2527. | 111. | 3792. | 2723. | 9. | 3984. |
| | 2 | 225. | 2569. | 464. | 416. | 2426. | 1202. | 1029. | 1991. | 1938. |
| | 3 | -227. | 2431. | 332. | -153. | 2439. | 452. | -193. | 2431. | 414. |
| | 4 | -224. | 2041. | 260. | -226. | 2050. | 256. | -199. | 2043. | 278. |
| | 5 | -71. | 1317. | 275. | -7. | 1299. | 362. | -12. | 1378. | 374. |
| | 6 | 352. | 403. | 1340. | 932. | 475. | 1552. | 1471. | 911. | 2066. |
| | INST.CAP. | 3192. | | | | | | | | |
| | TOTAL ENERGY | | | 7092. | | | 7616. | | | 9654. |
| 1986 | 1 | 2755. | 149. | 4150. | 2752. | 112. | 4121. | 2969. | 10. | 4344. |
| | 2 | 273. | 2857. | 1110. | 568. | 2617. | 1468. | 1224. | 2039. | 2257. |
| | 3 | -193. | 2633. | 613. | -39. | 2546. | 685. | -69. | 2638. | 645. |
| | 4 | -142. | 2249. | 421. | -150. | 2251. | 416. | -120. | 2251. | 439. |
| | 5 | 0. | 1476. | 422. | 97. | 1431. | 546. | 97. | 1505. | 565. |
| | 6 | 950. | 430. | 1543. | 1132. | 489. | 1775. | 1623. | 917. | 2889. |
| | INST.CAP. | 3492. | | | | | | | | |
| | TOTAL ENERGY | | | 8259. | | | 9009. | | | 11139. |



198

VARIABLE SYSTEM (CONTD.)

SUMMARY DESCRIPTION OF COMPOSITE HYDROELECTRIC PLANT TYPE HYDL

*** CAPACITY IN MW * ENERGY IN GWH ***

FIXED O&M COSTS : 1.590 $/KW-MONTH

| YEAR | P O S S | HYDROCONDITION 1 PROB.: 0.28 CAPACITY BASE | PEAK | ENERGY | HYDROCONDITION 2 PROB.: 0.55 CAPACITY BASE | PEAK | ENERGY | HYDROCONDITION 3 PROB.: 0.17 CAPACITY BASE | PEAK | ENERGY |
|---|---|---|---|---|---|---|---|---|---|---|
| 1995 10 | 1 | 2755. | 150. | 4444. | 2777. | 113. | 4450. | 3215. | 11. | 4704. |
| | 2 | 555. | 3155. | 1250. | 717. | 2309. | 1734. | 1419. | 2167. | 2576. |
| | 3 | 21. | 2345. | 344. | 35. | 2353. | 914. | 55. | 2845. | 876. |
| | 4 | -53. | 2457. | 532. | -74. | 2472. | 576. | -41. | 2455. | 600. |
| | 5 | 34. | 1634. | 574. | 201. | 1563. | 730. | 207. | 1631. | 756. |
| | 6 | 1167. | 461. | 1740. | 1232. | 502. | 1998. | 1774. | 924. | 3112. |
| | INST.CAP. 3792. | | | | | | | | | |
| | TOTAL ENERGY | | | 7440. | | | 10402. | | | 12624. |
| 1995 11 | 1 | 3154. | 151. | 4726. | 3291. | 115. | 4779. | 3461. | 12. | 5064. |
| | 2 | 555. | 3373. | 1402. | 871. | 3000. | 2000. | 1614. | 2335. | 2895. |
| | 3 | 145. | 3052. | 1075. | 203. | 3060. | 1145. | 179. | 3052. | 1107. |
| | 4 | 10. | 2665. | 745. | 2. | 2683. | 736. | 38. | 2667. | 761. |
| | 5 | 161. | 1793. | 726. | 305. | 1595. | 914. | 316. | 1758. | 947. |
| | 6 | 1253. | 491. | 1949. | 1432. | 515. | 2221. | 1925. | 931. | 3335. |
| | INST.CAP. 4392. | | | | | | | | | |
| | TOTAL ENERGY | | | 10623. | | | 11795. | | | 14109. |
| 1995 12 | 1 | 3395. | 221. | 5130. | 3495. | 162. | 5254. | 3833. | 13. | 5608. |
| | 2 | 340. | 3740. | 1434. | 830. | 3373. | 2041. | 1668. | 2654. | 3049. |
| | 3 | 52. | 3383. | 1061. | 131. | 3397. | 1132. | 101. | 3388. | 1093. |
| | 4 | -47. | 2937. | 732. | -52. | 2954. | 724. | -27. | 2939. | 749. |
| | 5 | 125. | 1960. | 721. | 258. | 1864. | 909. | 277. | 1936. | 943. |
| | 6 | 1235. | 594. | 2024. | 1464. | 645. | 2298. | 1870. | 1205. | 3467. |
| | INST.CAP. 4524. | | | | | | | | | |
| | TOTAL ENERGY | | | 11108. | | | 12358. | | | 14909. |



195

VARIABLE SYSTEM (CONTD.)
SUMMARY DESCRIPTION OF COMPOSITE HYDROELECTRIC PLANT TYPE HYDI
*** CAPACITY IN MW * ENERGY IN GWH ***
FIXED O&M COSTS : 1.590 $/KW-MONTH

| YEAR | P O W E R | HYDROCONDITION 1 PROB.: 0.23 CAPACITY BASE | CAPACITY PEAK | ENERGY | HYDROCONDITION 2 PROB.: 0.55 CAPACITY BASE | CAPACITY PEAK | ENERGY | HYDROCONDITION 3 PROB.: 0.17 CAPACITY BASE | CAPACITY PEAK | ENERGY |
|---|---|---|---|---|---|---|---|---|---|---|
| 1976 | 1 | 3338. | 223. | 5420. | 3729. | 163. | 5583. | 4079. | 14. | 5968. |
| | 2 | 395. | 4014. | 1530. | 932. | 3567. | 2307. | 1863. | 2802. | 3368. |
| | 3 | 130. | 3595. | 1292. | 255. | 3604. | 1363. | 225. | 3595. | 1324. |
| | 4 | 90. | 3143. | 873. | 14. | 3135. | 884. | 52. | 3147. | 910. |
| | 5 | 201. | 2118. | 875. | 372. | 1995. | 1093. | 387. | 2062. | 1134. |
| | 6 | 1421. | 625. | 2227. | 1614. | 653. | 2521. | 2021. | 1212. | 3690. |
| | INST.CAP. 4824. | | | | | | | | | |
| | TOTAL ENERGY | | | 12235. | | | 13751. | | | 16394. |
| 1986 | 1 | 3732. | 224. | 5704. | 3945. | 154. | 5912. | 4325. | 15. | 6328. |
| | 2 | 450. | 4282. | 1726. | 1133. | 3756. | 2573. | 2058. | 2950. | 3687. |
| | 3 | 110. | 3302. | 1523. | 379. | 3311. | 1594. | 349. | 3302. | 1555. |
| | 4 | 199. | 3353. | 1054. | 90. | 3376. | 1044. | 131. | 3355. | 1071. |
| | 5 | 273. | 2277. | 1025. | 476. | 2128. | 1277. | 497. | 2188. | 1325. |
| | 6 | 1555. | 653. | 2430. | 1754. | 571. | 2744. | 2173. | 1218. | 3913. |
| | INST.CAP. 5124. | | | | | | | | | |
| | TOTAL ENERGY | | | 13452. | | | 15144. | | | 17879. |
| 1997 | 1 | 3776. | 225. | 5968. | 4159. | 166. | 6241. | 4571. | 16. | 6688. |
| | 2 | 555. | 4550. | 1872. | 1234. | 3948. | 2839. | 2253. | 3098. | 4306. |
| | 3 | 454. | 4009. | 1754. | 503. | 4018. | 1825. | 473. | 4009. | 1786. |
| | 4 | 158. | 3561. | 1215. | 166. | 3587. | 1204. | 210. | 3563. | 1232. |
| | 5 | 355. | 2430. | 1177. | 530. | 2260. | 1461. | 606. | 2315. | 1516. |
| | 6 | 1538. | 680. | 2533. | 1914. | 684. | 2967. | 2324. | 1225. | 4136. |
| | INST.CAP. 5424. | | | | | | | | | |
| | TOTAL ENERGY | | | 14639. | | | 16537. | | | 19364. |



196.

VARIABLE SYSTEM (CONTD.)
SUMMARY DESCRIPTION OF COMPOSITE HYDROELECTRIC PLANT TYPE HYDL
*** CAPACITY IN MW * ENERGY IN GWH ***
FIXED O&M COSTS : 1.590 $/KW-MONTH

| YEAR | PLANT | HYDROCONDITION 1 PROB.: 0.23 CAPACITY BASE | CAPACITY PEAK | ENERGY | HYDROCONDITION 2 PROB.: 0.55 CAPACITY BASE | CAPACITY PEAK | ENERGY | HYDROCONDITION 3 PROB.: 0.17 CAPACITY BASE | CAPACITY PEAK | ENERGY |
|---|---|---|---|---|---|---|---|---|---|---|
| 1997 To | 1 | +173. | 289. | 5136. | 4556. | 200. | 6524. | 4820. | 18. | 7053. |
| | 2 | +55. | +774. | 1856. | 1236. | +282. | 2861. | 2280. | 3419. | 4121. |
| | 3 | 364. | 4320. | 1747. | 434. | 4328. | 1617. | 403. | 4320. | 1779. |
| | 4 | 150. | 3819. | 1206. | 108. | 3845. | 1194. | 152. | 3821. | 1223. |
| | 5 | 307. | 2645. | 1159. | 552. | 2470. | 1454. | 558. | 2525. | 1509. |
| | 6 | 1757. | 766. | 2753. | 1979. | 767. | 3083. | 2388. | 1304. | 4248. |
| | INST.CAP. 5724. | | | | | | | | | |
| | TOTAL ENERGY | | | 14927. | | | 16933. | | | 19933. |
| 1998 To | 1 | 4231. | 334. | 6384. | 4543. | 234. | 6807. | 5069. | 20. | 7418. |
| | 2 | +96. | 4997. | 1860. | 1137. | 4617. | 2883. | 2307. | 3740. | 4236. |
| | 3 | 295. | 4630. | 1740. | 364. | 4539. | 1809. | 334. | 4630. | 1772. |
| | 4 | 73. | 4076. | 1197. | 51. | 4102. | 1184. | 95. | 4078. | 1214. |
| | 5 | 258. | 2855. | 1161. | 434. | 2680. | 1447. | 510. | 2735. | 1502. |
| | 6 | 1325. | 847. | 2873. | 2044. | 350. | 3199. | 2451. | 1384. | 4360. |
| | INST.CAP. 6024. | | | | | | | | | |
| | TOTAL ENERGY | | | 15215. | | | 17329. | | | 20502. |
| 1998 To | 1 | +355. | +37. | 6515. | 4677. | 315. | 7024. | 5281. | 56. | 7780. |
| | 2 | 355. | 5213. | 1852. | 1052. | 5015. | 2833. | 2305. | 4088. | 4317. |
| | 3 | 225. | +935. | 1729. | 295. | +943. | 1798. | 264. | 4935. | 1761. |
| | 4 | 14. | +329. | 1136. | -7. | 4354. | 1173. | 36. | 4331. | 1203. |
| | 5 | 210. | 3058. | 1152. | 436. | 2383. | 1439. | 462. | 2938. | 1454. |
| | 6 | 1352. | 959. | 2936. | 2053. | 965. | 3260. | 2477. | 1492. | 4424. |
| | INST.CAP. 6024. | | | | | | | | | |
| | TOTAL ENERGY | | | 15372. | | | 17577. | | | 20979. |



197

VARIABLE SYSTEM (CONTD.)
SUMMARY DESCRIPTION OF COMPOSITE HYDROELECTRIC PLANT TYPE HYD1
*** CAPACITY IN MW * ENERGY IN GWH ***
FIXED O.M COSTS : 1.595 $/KW-MONTH

| YEAR | PROJ | HYDROCONDITION 1 PROB.: 0.28 CAPACITY BASE | CAPACITY PEAK | ENERGY | HYDROCONDITION 2 PROB.: 0.55 CAPACITY BASE | CAPACITY PEAK | ENERGY | HYDROCONDITION 3 PROB.: 0.17 CAPACITY BASE | CAPACITY PEAK | ENERGY |
|---|---|---|---|---|---|---|---|---|---|---|
| 1976 | 19 1 | 479. | 866. | 6959. | 5135. | 475. | 7593. | 5777. | 350. | 8647. |
| | 2 | 427. | 5537. | 2167. | 1258. | 5562. | 3366. | 2743. | 4481. | 5071. |
| | 3 | 430. | 5125. | 2245. | 435. | 5581. | 2188. | 518. | 5473. | 2515. |
| | 4 | 165. | 4496. | 1637. | 138. | 4984. | 1556. | 262. | 4759. | 1743. |
| | 5 | 323. | 3313. | 1434. | 653. | 3495. | 1865. | 864. | 3390. | 2258. |
| | 6 | 1749. | 1190. | 3283. | 2547. | 1509. | 4168. | 2974. | 1849. | 5305. |
| | INST.CAP. 7178. | | | | | | | | | |
| | TOTAL ENERGY | | | 17775. | | | 21130. | | | 25339. |
| 1977 | 20 1 | 451. | 971. | 7090. | 5318. | 557. | 8210. | 5989. | 386. | 9009. |
| | 2 | 377. | 5337. | 2159. | 1153. | 5760. | 3366. | 2741. | 4829. | 5152. |
| | 3 | 330. | 5423. | 2232. | 355. | 5886. | 2177. | 448. | 5778. | 2304. |
| | 4 | 110. | 4750. | 1626. | 31. | 5235. | 1545. | 204. | 5011. | 1732. |
| | 5 | 275. | 3516. | 1475. | 605. | 3593. | 1857. | 816. | 3593. | 2250. |
| | 6 | 1975. | 1303. | 3548. | 2571. | 1424. | 4229. | 3000. | 1957. | 5369. |
| | INST.CAP. 7478. | | | | | | | | | |
| | TOTAL ENERGY | | | 17930. | | | 21584. | | | 25816. |
| 1978 | 21 1 | 527. | 1602. | 7534. | 5427. | 716. | 9179. | 5486. | 679. | 9876. |
| | 2 | 449. | 5670. | 2474. | 1349. | 6507. | 3849. | 3179. | 5222. | 5906. |
| | 3 | 395. | 5610. | 2746. | 505. | 6524. | 2567. | 701. | 6317. | 2858. |
| | 4 | 254. | 4919. | 2077. | 226. | 5855. | 1928. | 430. | 5439. | 2272. |
| | 5 | 336. | 3771. | 1837. | 823. | 4309. | 2283. | 1218. | 4045. | 3014. |
| | 6 | 2072. | 1534. | 3693. | 3051. | 1767. | 5137. | 3497. | 2314. | 6250. |
| | INST.CAP. 8332. | | | | | | | | | |
| | TOTAL ENERGY | | | 20531. | | | 24943. | | | 30176. |

VARIABLE SYSTEM (CONTD.)
SUMMARY DESCRIPTION OF COMPOSITE HYDROELECTRIC PLANT TYPE HYDL
*** CAPACITY IN MW * ENERGY IN GWH ***
FIXED O&M COSTS : 1.590 $/KW-MONTH

| YEAR | P J | R | HYDROCONDITION 1 PROB.: 0.28 CAPACITY BASE | CAPACITY PEAK | ENERGY | HYDROCONDITION 2 PROB.: 0.55 CAPACITY BASE | CAPACITY PEAK | ENERGY | HYDROCONDITION 3 PROB.: 0.17 CAPACITY BASE | CAPACITY PEAK | ENERGY |
|---|---|---|---|---|---|---|---|---|---|---|---|
| 2001 | 22 | 1 | 4055. | 1855. | 7776. | 6335. | 376. | 10148. | 6982. | 973. | 10743. |
| | | 2 | 521. | 6545. | 2789. | 1554. | 7055. | 4332. | 3618. | 5614. | 6660. |
| | | 3 | 579. | 5605. | 3260. | 668. | 7161. | 2957. | 955. | 6855. | 3412. |
| | | 4 | 418. | 5067. | 2528. | 571. | 5495. | 2311. | 656. | 5867. | 2812. |
| | | 5 | 501. | 4026. | 2139. | 1049. | 4921. | 2709. | 1621. | 4496. | 3778. |
| | | 6 | 2153. | 1766. | 4038. | 3550. | 2111. | 6045. | 3993. | 2672. | 7131. |
| | | INST.CAP. | 9180. | | | | | | | | |
| | | TOTAL ENERGY | | | 22732. | | | 28502. | | | 34536. |
| 2002 | 23 | 1 | 4479. | 2254. | 8422. | 6843. | 1036. | 11117. | 7479. | 1266. | 11610. |
| | | 2 | 572. | 6715. | 3104. | 1730. | 7502. | 4815. | 4056. | 6007. | 7414. |
| | | 3 | 554. | 5993. | 3774. | 736. | 7799. | 3347. | 1208. | 7394. | 3966. |
| | | 4 | 573. | 5256. | 2979. | 516. | 7125. | 2694. | 882. | 6295. | 3352. |
| | | 5 | 514. | 4281. | 2471. | 1257. | 5533. | 3135. | 2023. | 4948. | 4542. |
| | | 6 | 2265. | 1997. | 4333. | 4010. | 2454. | 6953. | 4490. | 3029. | 8012. |
| | | INST.CAP. | 10040. | | | | | | | | |
| | | TOTAL ENERGY | | | 25133. | | | 32061. | | | 38896. |
| 2003 | 24 | 1 | 5554. | 2811. | 9114. | 7494. | 1317. | 12241. | 8135. | 1542. | 12742. |
| | | 2 | 559. | 7580. | 3595. | 2219. | 8395. | 5589. | 4538. | 6407. | 8335. |
| | | 3 | 1520. | 6469. | 4575. | 1041. | 6475. | 3821. | 1515. | 8019. | 4530. |
| | | 4 | 755. | 5776. | 3682. | 780. | 7784. | 3198. | 1210. | 6899. | 3952. |
| | | 5 | 595. | 4931. | 2988. | 1509. | 6213. | 3604. | 2494. | 5409. | 5366. |
| | | 6 | 2553. | 2056. | 4920. | 4506. | 2390. | 7816. | 5049. | 3402. | 8979. |
| | | INST.CAP. | 10972. | | | | | | | | |
| | | TOTAL ENERGY | | | 28874. | | | 36269. | | | 43904. |



199

VARIABLE SYSTEM (CONTD.)

SUMMARY DESCRIPTION OF COMPOSITE HYDROELECTRIC PLANT TYPE HYDI

*** CAPACITY IN MW * ENERGY IN GWH ***

FIXED O&M COSTS : 1.500 $/KW-MONTH

| YEAR | P O S S | | HYDROCONDITION 1 PROB.: 0.23 CAPACITY BASE | PEAK | ENERGY | HYDROCONDITION 2 PROB.: 0.55 CAPACITY BASE | PEAK | ENERGY | HYDROCONDITION 3 PROB.: 0.17 CAPACITY BASE | PEAK | ENERGY |
|---|---|---|---|---|---|---|---|---|---|---|---|
| 2005 | 25 | 1 | 5447. | 3558. | 9636. | 8145. | 1533. | 13363. | 3792. | 1417. | 13874. |
| | | 2 | 4125. | 3249. | 4030. | 2653. | 3533. | 6364. | 5120. | 6807. | 7256. |
| | | 3 | 1757. | 5944. | 5570. | 1270. | 7153. | 4295. | 1622. | 8644. | 5094. |
| | | 4 | 1557. | 5558. | 4335. | 1051. | 3444. | 3702. | 1538. | 7503. | 4552. |
| | | 5 | 1276. | 5381. | 3535. | 1761. | 5393. | 4673. | 2965. | 5870. | 6190. |
| | | 6 | 2351. | 5275. | 5457. | 5031. | 3427. | 8679. | 5609. | 3774. | 9945. |
| | | INST.CAP. | 11304. | | | | | | | | |
| | | TOTAL | 24657 | 32515. | | | 40477. | | | 48912. | |

VARIABLE SYSTEM
SUMMARY DESCRIPTION OF COMPOSITE HYDROELECTRIC PLANT TYPE HYD2
*** CAPACITY IN MW * ENERGY IN GWH ***
FIXED O&M COSTS : 1.590 $/KW-MONTH

| YEAR | P S E O S | K | HYDROCONDITION 1 PROB.: 0.23 CAPACITY BASE | CAPACITY PEAK | ENERGY | HYDROCONDITION 2 PROB.: 0.55 CAPACITY BASE | CAPACITY PEAK | ENERGY | HYDROCONDITION 3 PROB.: 0.17 CAPACITY BASE | CAPACITY PEAK | ENERGY |
|---|---|---|---|---|---|---|---|---|---|---|---|
| 1972 | 1 | 1 | 159. | 0. | 232. | 136. | 0. | 274. | 221. | 0. | 323. |
| | | 2 | 182. | 0. | 256. | 215. | 0. | 314. | 254. | 0. | 371. |
| | | 3 | 75. | 0. | 139. | 112. | 0. | 164. | 133. | 0. | 194. |
| | | 4 | 54. | 0. | 123. | 97. | 0. | 145. | 117. | 0. | 171. |
| | | 5 | 120. | 0. | 134. | 149. | 0. | 217. | 175. | 0. | 256. |
| | | 6 | 203. | 0. | 299. | 242. | 0. | 353. | 262. | 0. | 382. |
| | | INSTCAP. | 262. | | | | | | | | |
| | | TOTAL ENERGY | | | 1243. | | | 1467. | | | 1697. |
| 1975 | 2 | 1 | 212. | 0. | 309. | 250. | 0. | 365. | 295. | 0. | 430. |
| | | 2 | 249. | 0. | 363. | 294. | 0. | 429. | 347. | 0. | 507. |
| | | 3 | 170. | 0. | 248. | 201. | 0. | 293. | 237. | 0. | 346. |
| | | 4 | 133. | 0. | 199. | 151. | 0. | 235. | 190. | 0. | 277. |
| | | 5 | 192. | 0. | 280. | 226. | 0. | 330. | 266. | 0. | 389. |
| | | 6 | 289. | 0. | 422. | 341. | 0. | 498. | 371. | 0. | 542. |
| | | INSTCAP. | 372. | | | | | | | | |
| | | TOTAL ENERGY | | | 1621. | | | 2150. | | | 2491. |
| 1977 | 3 | 1 | 350. | 0. | 482. | 390. | 0. | 570. | 460. | 0. | 672. |
| | | 2 | 399. | 0. | 582. | 471. | 0. | 688. | 557. | 0. | 813. |
| | | 3 | 333. | 0. | 494. | 430. | 0. | 584. | 472. | 0. | 689. |
| | | 4 | 251. | 0. | 357. | 299. | 0. | 437. | 353. | 0. | 515. |
| | | 5 | 340. | 0. | 496. | 401. | 0. | 585. | 473. | 0. | 690. |
| | | 6 | 442. | 0. | 648. | 555. | 0. | 825. | 618. | 0. | 902. |
| | | INSTCAP. | 619. | | | | | | | | |
| | | TOTAL ENERGY | | | 3037. | | | 3689. | | | 4281. |

C O T G E N
CONSTRAINTS ON CONFIGURATIONS GENERATED
COUNT NUMBER OF CONFIGURATIONS
MINIMUM
MAXIMUM

| YEAR | COUNT | MAX-MIN | OIL1 | OIL2 | EAR1 | EAR2 | OIL3 | CLIM | TCFG | NUKE | V-GT | HYD1 | HYD2 |
|---|---|---|---|---|---|---|---|---|---|---|---|---|---|
| | | | ACCS. PERMITTED EXTREME CONFIGURATIONS OF ALTERNATIVES | | | | | | | | | | |
| 1986 | 1 | -9 | 0 | 0 | 0 | 0 | 0 | 0 | 0 | 0 | 0 | 0 | 0 |
| | | 20 | 0 | 0 | 0 | 0 | 0 | 0 | 0 | 0 | 0 | 0 | 0 |
| 1987 | 1 | -9 | 0 | 0 | 0 | 0 | 0 | 0 | 0 | 0 | 0 | 0 | 0 |
| | | 20 | 0 | 0 | 0 | 0 | 0 | 0 | 0 | 0 | 0 | 0 | 0 |
| 1988 | 1 | -9 | 0 | 0 | 0 | 0 | 0 | 0 | 0 | 0 | 0 | 0 | 0 |
| | | 20 | 0 | 0 | 0 | 0 | 0 | 0 | 0 | 0 | 0 | 0 | 0 |
| 1989 | 4 | 0 | 0 | 0 | 0 | 0 | 0 | 0 | 0 | 0 | 0 | 0 | 0 |
| | | 20 | 1 | 0 | 0 | 0 | 0 | 0 | 0 | 0 | 2 | 0 | 0 |
| 1990 | 6 | 0 | 0 | 0 | 0 | 0 | 0 | 0 | 0 | 0 | 5 | 2 | 0 |
| | | 20 | 1 | 0 | 0 | 0 | 0 | 0 | 0 | 0 | 7 | 2 | 0 |
| 1991 | 30 | 10 | 0 | 0 | 0 | 0 | 0 | 0 | 0 | 0 | 5 | 4 | 0 |
| | | 20 | 2 | 2 | 1 | 0 | 0 | 0 | 0 | 0 | 7 | 4 | 0 |
| 1992 | 25 | 10 | 2 | 0 | 1 | 0 | 0 | 0 | 0 | 0 | 5 | 4 | 1 |
| | | 20 | 3 | 2 | 1 | 0 | 1 | 0 | 0 | 0 | 7 | 4 | 1 |
| 1993 | 77 | 10 | 3 | 1 | 1 | 0 | 0 | 0 | 0 | 0 | 5 | 4 | 1 |
| | | 20 | 3 | 3 | 1 | 2 | 1 | 1 | 0 | 0 | 7 | 4 | 1 |
| 1994 | 40 | 10 | 3 | 1 | 1 | 2 | 0 | 0 | 0 | 0 | 5 | 9 | 1 |
| | | 20 | 3 | 3 | 1 | 2 | 1 | 2 | 0 | 0 | 7 | 9 | 1 |
| 1995 | 34 | 10 | 3 | 1 | 1 | 2 | 0 | 1 | 0 | 0 | 5 | 12 | 2 |
| | | 20 | 3 | 3 | 1 | 2 | 1 | 3 | 0 | 1 | 7 | 12 | 2 |



207

C O N S E N (CONTD.)
CONSTRAINTS ON CONFIGURATIONS GENERATED
CON: NUMBER OF CONFIGURATIONS
MINIMUM
MAXIMUM

RES. PERMITTED EXTREME CONFIGURATIONS OF ALTERNATIVES

| YEAR | CON | MAR-SH | OIL1 | OIL2 | LAK1 | LAK2 | OIL3 | CLIM | TCFG | NUKE | V-GT | HYD1 | HYD2 |
|---|---|---|---|---|---|---|---|---|---|---|---|---|---|
| 1996 | 52 | 15 | 3 | 1 | 1 | 2 | 0 | 1 | 0 | 0 | 6 | 14 | 2 |
| | | 25 | 3 | 3 | 1 | 2 | 2 | 3 | 0 | 1 | 8 | 14 | 2 |
| 1997 | 74 | 15 | 3 | 1 | 1 | 2 | 0 | 3 | 0 | 0 | 6 | 16 | 3 |
| | | 25 | 3 | 3 | 1 | 2 | 2 | 3 | 1 | 2 | 8 | 16 | 3 |
| 1998 | 82 | 15 | 3 | 1 | 1 | 2 | 0 | 3 | 0 | 1 | 6 | 18 | 3 |
| | | 25 | 3 | 3 | 1 | 2 | 2 | 3 | 1 | 3 | 8 | 18 | 3 |
| 1999 | 74 | 15 | 3 | 1 | 1 | 2 | 0 | 3 | 0 | 2 | 6 | 20 | 3 |
| | | 25 | 3 | 3 | 1 | 2 | 2 | 3 | 1 | 4 | 8 | 20 | 3 |
| 2000 | 91 | 15 | 3 | 1 | 1 | 2 | 0 | 3 | 0 | 2 | 6 | 21 | 3 |
| | | 25 | 3 | 3 | 1 | 2 | 2 | 3 | 1 | 4 | 8 | 21 | 3 |
| 2001 | 93 | 15 | 3 | 1 | 1 | 2 | 0 | 3 | 0 | 4 | 6 | 21 | 3 |
| | | 25 | 3 | 3 | 1 | 2 | 2 | 3 | 1 | 6 | 8 | 21 | 3 |
| 2002 | 101 | 15 | 3 | 1 | 1 | 2 | 0 | 3 | 0 | 5 | 6 | 22 | 3 |
| | | 25 | 3 | 3 | 1 | 2 | 2 | 3 | 1 | 7 | 8 | 22 | 3 |
| 2003 | 101 | 15 | 3 | 1 | 1 | 2 | 0 | 3 | 0 | 6 | 6 | 23 | 3 |
| | | 25 | 3 | 3 | 1 | 2 | 2 | 3 | 1 | 8 | 8 | 23 | 3 |
| 2004 | 115 | 15 | 3 | 1 | 1 | 2 | 0 | 3 | 0 | 6 | 6 | 24 | 3 |
| | | 25 | 3 | 3 | 1 | 2 | 2 | 3 | 1 | 8 | 8 | 24 | 3 |
| 2005 | 115 | 15 | 3 | 1 | 1 | 2 | 0 | 3 | 0 | 8 | 6 | 24 | 3 |
| | | 25 | 3 | 3 | 1 | 2 | 2 | 3 | 1 | 10 | 8 | 24 | 3 |

OPTIMUM SOLUTION
ANNUAL ADDITIONS: CAPACITY(MW) AND NUMBER OF UNITS OR PROJECTS
FOR DETAILS OF INDIVIDUAL UNITS OR PROJECTS SEE VARIABLE SYSTEM REPORT
SEE ALSO FIXED SYSTEM REPORT FOR OTHER ADDITIONS OR RETIREMENTS

| NAME: | | | | OIL1 | LAK1 | OIL3 | TCFG | V-GT | HYD2 |
|---|---|---|---|---|---|---|---|---|---|
| | | | | OIL2 | LAK2 | CLIM | NUKE | HYD1 | |
| SIZE (MW): | | | | 210. | 300. | 500. | 600. | 100. | 0. |
| | SELECP | | | 300. | 300. | 600. | 900. | 0. | |
| YEAR | SELECT | NUMBT | CAP | | | | | | |
| 1986 | 2.000 | | 0. | | | | | | |
| 1987 | 0.000 | | 0. | | | | | | |
| 1988 | 2.077 | | 0. | | | | | | |
| 1989 | 1.545 | | 210. | 1 | | | | | |
| 1990 | 0.274 | | 140+. | | | | | 6 | 2 |
| 1991 | 0.440 | | 110+. | | 1 | | | | 2 |
| 1992 | 0.454 | | 982. | 2 | 1 | | | | 1 |
| 1993 | 0.452 | | 900. | | 1 | 2 | | | |
| 1994 | 0.422 | | 1704. | | | | | | 5 |
| 1995 | 0.154 | | 2342. | | | | 2 | | 3 1 |
| 1996 | 0.256 | | 1300. | | | | 1 | 1 | 2 |
| 1997 | 0.273 | | 1747. | | | | | 1 | 2 1 |
| 1998 | 0.304 | | 1500. | | | | | 1 | 2 |
| 1999 | 0.240 | | 2054. | | | | | 1 | 2 |
| 2000 | 0.455 | | 654. | | | | | | 1 |
| 2001 | 0.452 | | 1300. | | | | | 2 | |
| 2002 | 0.357 | | 1754. | | | | | 1 | 1 |
| 2003 | 0.428 | | 1754. | | | | | 1 | 1 |
| 2004 | 0.314 | | 952. | | | | | | 1 |
| 2005 | 1.000 | | 1800. | | | | | 2 | |



204

SUMMARY OF
FIXED SYSTEM PLUS OPTIMUM SOLUTION
(NOMINAL CAPACITY IN MW, ENERGY IN GWH)

| YEAR | HYDROELECTRIC FOL PR. | HYDROELECTRIC FOL CAP | HYDROELECTRIC NOL PR. | HYDROELECTRIC NOL CAP | THERMAL FUEL TYPE CAPACITIES 0 COAL | 1 LSOP | 2 FOIL | 3 GASI | 4 NUCL | TOTAL CAP | SYSTEM RES. % | SYSTEM LOLP. % | ENERGY NOT SERVED HYDROCONDITION 1 | 2 | 3 |
|---|---|---|---|---|---|---|---|---|---|---|---|---|---|---|---|
| 1986 | 1 | 1750 | 4 | 1150 | 16 | 915 | 1228 | 365 | 130 | 5460 | 17.7 | 2.060 | 50 | 27 | 6 |
| 1987 | 1 | 1750 | 4 | 1150 | 16 | 915 | 1228 | 1165 | 130 | 5360 | 25.0 | 0.625 | 15 | 7 | 2 |
| 1988 | 1 | 1750 | 4 | 1150 | 16 | 915 | 1228 | 1315 | 130 | 5510 | 16.6 | 2.077 | 53 | 33 | 11 |
| 1989 | 1 | 1750 | 6 | 1345 | 16 | 915 | 1898 | 1315 | 130 | 7369 | 17.9 | 1.545 | 40 | 20 | 6 |
| 1990 | 5 | 2614 | 6 | 1345 | 16 | 1515 | 2528 | 1315 | 130 | 9463 | 35.8 | 0.274 | 4 | 4 | 5 |
| 1991 | 5 | 3473 | 6 | 1345 | 316 | 1715 | 2342 | 1301 | 130 | 10627 | 37.4 | 0.446 | 10 | 5 | 5 |
| 1992 | 5 | 3473 | 7 | 1607 | 316 | 1595 | 3062 | 1272 | 130 | 11560 | 35.2 | 0.454 | 10 | 5 | 5 |
| 1993 | 5 | 3473 | 7 | 1607 | 916 | 1585 | 3362 | 1272 | 130 | 12450 | 33.4 | 0.482 | 9 | 5 | 4 |
| 1994 | 10 | 3242 | 7 | 1607 | 916 | 1585 | 3362 | 1272 | 130 | 14214 | 39.9 | 0.422 | 12 | 6 | 10 |
| 1995 | 15 | 3274 | 8 | 1717 | 2100 | 1585 | 3242 | 1272 | 130 | 16420 | 43.7 | 0.184 | 7 | 7 | 7 |
| 1996 | 15 | 3374 | 8 | 1717 | 2700 | 1733 | 3242 | 1204 | 130 | 17600 | 46.9 | 0.236 | 11 | 9 | 10 |
| 1997 | 17 | 7474 | 9 | 1964 | 2700 | 1733 | 3110 | 1204 | 1030 | 19215 | 43.2 | 0.233 | 13 | 9 | 10 |
| 1998 | 19 | 8374 | 9 | 1964 | 2700 | 1728 | 3050 | 1180 | 1930 | 20626 | 47.3 | 0.304 | 16 | 10 | 15 |
| 1999 | 21 | 9223 | 9 | 1964 | 2700 | 1728 | 2990 | 1180 | 2830 | 22620 | 49.8 | 0.240 | 17 | 12 | 11 |
| 2000 | 22 | 10052 | 9 | 1964 | 2700 | 1728 | 2990 | 1180 | 2830 | 23474 | 44.5 | 0.435 | 40 | 13 | 16 |
| 2001 | 22 | 10052 | 9 | 1964 | 2700 | 1708 | 2865 | 1180 | 4630 | 25129 | 44.1 | 0.462 | 41 | 12 | 12 |
| 2002 | 23 | 10953 | 9 | 1964 | 2700 | 1508 | 2865 | 1180 | 5530 | 26683 | 42.8 | 0.567 | 64 | 11 | 13 |
| 2003 | 24 | 11773 | 9 | 1964 | 2700 | 1508 | 2865 | 1180 | 6430 | 28437 | 42.4 | 0.628 | 84 | 10 | 14 |
| 2004 | 25 | 12722 | 9 | 1964 | 2700 | 1508 | 2865 | 1180 | 6430 | 29369 | 37.8 | 0.814 | 115 | 11 | 12 |
| 2005 | 25 | 12722 | 9 | 1964 | 2700 | 1508 | 2865 | 910 | 8230 | 30859 | 36.2 | 1.060 | 150 | 15 | 11 |



205

D Y N P R O

SUMMARY OF CAPITAL COSTS OF ALTERNATIVES IN $/KW

| PLANT | CAPITAL COSTS (DEPRECIABLE PART) DOMESTIC | FOREIGN | INCLUSIVE IDC % | CONSTR. TIME (YEARS) | PLANT LIFE (YEARS) | CAPITAL COSTS (NON-DEPREC. PART) DOMESTIC | FOREIGN |
|---|---|---|---|---|---|---|---|
| THERMAL PLANT CAPITAL COSTS | | | | | | | |
| THE1 | 458.2 | 458.2 | 15.79 | 5.50 | 30. | 0.0 | 61.7 |
| THE2 | 444.5 | 444.5 | 15.53 | 4.00 | 30. | 0.0 | 60.3 |
| CWA1 | 775.1 | 775.1 | 19.21 | 5.00 | 30. | 12.0 | 0.0 |
| CWA2 | 654.0 | 654.0 | 15.63 | 4.00 | 30. | 13.0 | 0.0 |
| THE3 | 423.9 | 423.9 | 17.44 | 4.50 | 30. | 0.0 | 59.7 |
| CCL1 | 543.7 | 543.7 | 19.21 | 5.00 | 30. | 0.0 | 45.4 |
| CCL2 | 772.4 | 772.4 | 19.21 | 5.00 | 30. | 0.0 | 45.2 |
| NUKE | 455.2 | 1586.3 | 27.22 | 3.00 | 30. | 0.0 | 132.0 |
| V-GT | 274.2 | 298.9 | 8.08 | 2.00 | 25. | 0.0 | 60.2 |
| HYDR - HYDRO PROJECT CAPITAL COSTS, PROJECT LIFE: 50. | | | | | | | |
| 1 | 259.0 | 280.0 | 22.67 | 6.00 | | | |
| 2 | 259.0 | 280.0 | 22.67 | 6.00 | | | |
| 3 | 259.0 | 280.0 | 22.67 | 6.00 | | | |
| 4 | 259.0 | 280.0 | 22.67 | 6.00 | | | |
| 5 | 259.0 | 280.0 | 22.67 | 6.00 | | | |
| 6 | 259.0 | 280.0 | 22.67 | 6.00 | | | |
| 7 | 902.0 | 1103.0 | 29.22 | 3.00 | | | |
| 8 | 902.0 | 1103.0 | 29.22 | 3.00 | | | |
| 9 | 902.0 | 1103.0 | 29.22 | 3.00 | | | |
| 10 | 902.0 | 1103.0 | 29.22 | 3.00 | | | |
| 11 | 902.0 | 1103.0 | 29.22 | 3.00 | | | |
| 12 | 259.0 | 280.0 | 22.67 | 6.00 | | | |
| 13 | 902.0 | 1103.0 | 29.22 | 3.00 | | | |
| 14 | 902.0 | 1103.0 | 29.22 | 3.00 | | | |
| 15 | 902.0 | 1103.0 | 29.22 | 3.00 | | | |
| 16 | 259.0 | 280.0 | 22.67 | 6.00 | | | |
| 17 | 259.0 | 280.0 | 22.67 | 6.00 | | | |
| 18 | 259.0 | 280.0 | 22.67 | 6.00 | | | |
| 19 | 614.0 | 751.0 | 29.22 | 3.00 | | | |



700

D Y N P R O (CONTD.)

SUMMARY OF CAPITAL COSTS OF ALTERNATIVES IN $/KW

| PLANT | CAPITAL COSTS (DEPRECIABLE PART) DOMESTIC | FOREIGN | INCLUSIVE IDC % | CONSTR. TIME (YEARS) | PLANT LIFE (YEARS) | CAPITAL COSTS (NON-DEPREC. PART) DOMESTIC | FOREIGN |
|---|---|---|---|---|---|---|---|
| HYDE - HYDRO PROJECT CAPITAL COSTS, PROJECT LIFE: 50. (CONTD.) | | | | | | | |
| 20 | 259.0 | 280.0 | 22.67 | 5.00 | | | |
| 21 | 514.0 | 751.0 | 29.22 | 3.00 | | | |
| 22 | 514.0 | 751.0 | 29.22 | 3.00 | | | |
| 23 | 514.0 | 751.0 | 29.22 | 3.00 | | | |
| 24 | 777.0 | 949.0 | 29.22 | 3.00 | | | |
| 25 | 777.0 | 949.0 | 29.22 | 3.00 | | | |
| 26 | 777.0 | 949.0 | 29.22 | 3.00 | | | |
| 27 | 777.0 | 949.0 | 29.22 | 3.00 | | | |
| 28 | 1344.0 | 1704.0 | 29.22 | 3.00 | | | |
| HYD2 - HYDRO PROJECT CAPITAL COSTS, PROJECT LIFE: 50. | | | | | | | |
| 1 | 532.0 | 711.0 | 22.67 | 5.00 | | | |
| 2 | 532.0 | 711.0 | 22.67 | 5.00 | | | |
| 3 | 532.0 | 711.0 | 22.67 | 5.00 | | | |
| 4 | 1380.0 | 1687.0 | 29.22 | 3.00 | | | |
| 5 | 1380.0 | 1687.0 | 29.22 | 3.00 | | | |



207

D Y N P R O

ECONOMIC PARAMETERS AND CONSTRAINTS

ALL COSTS WILL BE DISCOUNTED TO YEAR : 1986
BASE YEAR FOR ESCALATION CALCULATION IS : 1986

1986 INITIAL VALUES : (XX) = INDEX NUMBER; ( 0) = NO INDEX READ
**********

NAME OF ALTERNATIVES :

OIL1 OIL2 LAK1 LAK2 OIL3 CLI4 IGF5 NUKE V-GT HYD1 HYD2

DISCOUNT RATE APPLIED TO ALL DOMESTIC CAPITAL COSTS - %/YR 10.0
DISCOUNT RATE APPLIED TO ALL FOREIGN CAPITAL COSTS - %/YR 10.0

ESCALATION RATES FOR CAPITAL COSTS ( 0)

| | | | | | | | | | | | |
|---|---|---|---|---|---|---|---|---|---|---|---|
| DOMESTIC | 1.00 | 1.00 | 1.00 | 1.00 | 1.00 | 1.00 | 1.00 | 1.00 | 1.00 | 1.00 | 1.00 |
| FOREIGN | 1.00 | 1.00 | 1.00 | 1.00 | 1.00 | 1.00 | 1.00 | 1.00 | 1.00 | 1.00 | 1.00 |

MAXIMUM PERCENTAGE OF DOMESTIC CAPITAL BE ADDED ( 0)

| | | | | | | | | | | |
|---|---|---|---|---|---|---|---|---|---|---|
| 50 | 50 | 50 | 50 | 50 | 50 | 50 | 50 | 50 | 50 | 50 |

MINIMUM PERCENTAGE OF DOMESTIC MUST BE ADDED ( 0)

| | | | | | | | | | | |
|---|---|---|---|---|---|---|---|---|---|---|
| 0 | 0 | 0 | 0 | 0 | 0 | 0 | 0 | 0 | 0 | 0 |



28

D Y N P R O (CONTD.)

ECONOMIC PARAMETERS AND CONSTRAINTS

INPUT INITIAL VALUES : (XX) = INDEX NUMBER; ( 0) = NO INDEX READ
**********

| FUEL TYPE: | THERMAL COAL | HSOP | FUEL | GAS | NUCL | HYDROELECTRIC HYD1 | HYD2 | ENERGY NOT SERVED |
|---|---|---|---|---|---|---|---|---|
| DISCOUNT RATE APPLIED TO ALL DOMESTIC OPERATION COSTS - %/YR (14) | | | | | | | 10.0 | |
| DISCOUNT RATE APPLIED TO ALL FOREIGN OPERATION COSTS - %/YR (15) | | | | | | | 10.0 | |
| ESCALATION FACTOR FOR OPERATING COSTS ( 0) | | | | | | | | |
| DOMESTIC | 1.00 | 1.00 | 1.00 | 1.00 | 1.00 | 1.00 | 1.00 | 1.00 |
| FOREIGN | 1.00 | 1.00 | 1.00 | 1.00 | 1.00 | 1.00 | 1.00 | 1.00 |
| MULTIPLYING FACTOR FOR FUEL COSTS ( 0) | | | | | | | | |
| DOMESTIC | 1.00 | 1.00 | 1.00 | 1.00 | 1.00 | 1.00 | 1.00 | 1.00 |
| FOREIGN | 1.00 | 1.00 | 1.00 | 1.00 | 1.00 | 1.00 | 1.00 | 1.00 |

| COEFFICIENTS OF ENERGY NOT SERVED COST FUNCTION (11) | CF1 | CF2 | CF3 |
|---|---|---|---|
| ($/KWH) | 0.2000 | 0.0000 | 0.0000 |

PENALTY FACTOR ON FOREIGN EXPENDITURE ( 0) 1.0000

CRITICAL LOSS OF LOAD PROBABILITY IN % ( 0) 100.0000

DEPRECIATION OPTION (16) : 1 = SINKING FUND



209

EXPECTED COST OF OPERATION
FUEL COST
DOMESTIC

| TYPE OF PLANT : | | COAL | ISOP | FUEL | GAST | NUCL | HYD1 | HYD2 |
|---|---|---|---|---|---|---|---|---|
| YEAR | TOTAL | | | COST BY PLANT TYPE (1000$) | | | | |
| 1966 | 132622 | 2763 | 0 | 0 | 124356 | 4803 | 0 | 0 |
| 1967 | 216251 | 3076 | 0 | 0 | 208246 | 4909 | 0 | 0 |
| 1968 | 306853 | 3156 | 0 | 0 | 300749 | 5003 | 0 | 0 |
| 1969 | 303243 | 3168 | 0 | 0 | 295045 | 5030 | 0 | 0 |
| 1970 | 279576 | 3135 | 0 | 0 | 271485 | 4976 | 0 | 0 |
| 1971 | 311275 | 33246 | 0 | 0 | 270087 | 4941 | 0 | 0 |
| 1972 | 300621 | 35419 | 0 | 0 | 259217 | 4985 | 0 | 0 |
| 1973 | 363646 | 106353 | 0 | 0 | 252273 | 5020 | 0 | 0 |
| 1974 | 351255 | 102806 | 0 | 0 | 243548 | 4901 | 0 | 0 |
| 1975 | 305740 | 95549 | 0 | 0 | 205367 | 4825 | 0 | 0 |
| 1976 | 272242 | 73147 | 0 | 0 | 194287 | 4808 | 0 | 0 |
| 1977 | 251647 | 37859 | 0 | 0 | 139189 | 4599 | 0 | 0 |
| 1978 | 279471 | 36739 | 0 | 0 | 188062 | 4670 | 0 | 0 |
| 1979 | 255060 | 79990 | 0 | 0 | 166180 | 4510 | 0 | 0 |
| 2000 | 272357 | 88295 | 0 | 0 | 179939 | 4604 | 0 | 0 |
| 2001 | 241502 | 81719 | 0 | 0 | 155330 | 4452 | 0 | 0 |
| 2002 | 225558 | 79673 | 0 | 0 | 141471 | 4424 | 0 | 0 |
| 2003 | 207258 | 71800 | 0 | 0 | 133164 | 4294 | 0 | 0 |
| 2004 | 229019 | 78432 | 0 | 0 | 146257 | 4330 | 0 | 0 |
| 2005 | 205503 | 73185 | 0 | 0 | 128095 | 4229 | 0 | 0 |



20

EXPECTED COST OF OPERATION
FUEL COST
FORECAST

| TYPE OF PLANT : | | COAL | ISOP | FUEL | GAS | NUCL | HYD1 | HYD2 |
|---|---|---|---|---|---|---|---|---|
| YEAR | TOTAL | | | COST BY PLANT TYPE (1000$) | | | | |
| 1934 | 217377 | 0 | 13872 | 204055 | 0 | 0 | 0 | 0 |
| 1935 | 236326 | 0 | 12789 | 224037 | 0 | 0 | 0 | 0 |
| 1936 | 243905 | 0 | 23722 | 218184 | 0 | 0 | 0 | 0 |
| 1937 | 361379 | 0 | 21058 | 360321 | 0 | 0 | 0 | 0 |
| 1938 | 473624 | 0 | 8135 | 465489 | 0 | 0 | 0 | 0 |
| 1939 | 490869 | 0 | 23573 | 467296 | 0 | 0 | 0 | 0 |
| 1940 | 614435 | 0 | 16641 | 598262 | 0 | 0 | 0 | 0 |
| 1941 | 625353 | 0 | 11347 | 613986 | 0 | 0 | 0 | 0 |
| 1942 | 619793 | 0 | 8229 | 611564 | 0 | 0 | 0 | 0 |
| 1943 | 558124 | 141374 | 9136 | 407113 | 0 | 0 | 0 | 0 |
| 1944 | 568255 | 213924 | 5168 | 348187 | 0 | 0 | 0 | 0 |
| 1945 | 575572 | 235364 | 29724 | 315423 | 0 | 25361 | 0 | 0 |
| 1946 | 591579 | 198370 | 25364 | 313493 | 0 | 53748 | 0 | 0 |
| 1947 | 536725 | 202752 | 17303 | 246500 | 0 | 78466 | 0 | 0 |
| 1948 | 515373 | 137408 | 15442 | 323247 | 0 | 79221 | 0 | 0 |
| 1949 | 571570 | 134683 | 9239 | 235157 | 0 | 131447 | 0 | 0 |
| 1950 | 555057 | 150355 | 5942 | 210587 | 0 | 153584 | 0 | 0 |
| 1951 | 554314 | 131335 | 5813 | 193544 | 0 | 183623 | 0 | 0 |
| 1952 | 549095 | 136984 | 13281 | 264425 | 0 | 184403 | 0 | 0 |
| 1953 | 565452 | 171574 | 15835 | 220702 | 0 | 238252 | 0 | 0 |

EXPECTED COST OF OPERATION
OPERATION + MAINTENANCE AND ENERGY NOT SERVED (ENS)
DOMESTIC

| TYPE OF PLANT : | | COAL | ISOP | FOIL | GAST | NUCL | HYD1 | HYD2 | ENS |
|---|---|---|---|---|---|---|---|---|---|
| YEAR | TOTAL | | | COST BY PLANT TYPE (1000$) | | | | | |
| 1986 | 92999 | 557 | 3415 | 15859 | 8044 | 3691 | 33390 | 22056 | 6016 |
| 1987 | 97217 | 555 | 3436 | 16573 | 13462 | 3728 | 33390 | 22056 | 1616 |
| 1988 | 111584 | 564 | 3147 | 16145 | 22379 | 3770 | 33390 | 22056 | 6533 |
| 1989 | 124024 | 569 | 3920 | 28403 | 22317 | 3752 | 33390 | 25663 | 4581 |
| 1990 | 149333 | 564 | 8746 | 38597 | 21588 | 3758 | 49875 | 25663 | 865 |
| 1991 | 174825 | 3243 | 10613 | 37717 | 21227 | 3743 | 66360 | 25663 | 1258 |
| 1992 | 193639 | 3263 | 10087 | 49556 | 20739 | 3762 | 66360 | 30662 | 1227 |
| 1993 | 225568 | 36727 | 9836 | 52473 | 20560 | 3777 | 66360 | 30662 | 1189 |
| 1994 | 256866 | 37557 | 9722 | 52310 | 20029 | 3725 | 100017 | 30662 | 1685 |
| 1995 | 290390 | 53803 | 9697 | 40359 | 18369 | 3691 | 119708 | 32760 | 1482 |
| 1996 | 312570 | 77063 | 9852 | 36871 | 17256 | 3683 | 131156 | 32760 | 1929 |
| 1997 | 344180 | 74260 | 10671 | 34743 | 16467 | 25891 | 142604 | 37473 | 2071 |
| 1998 | 378340 | 75411 | 10511 | 34570 | 16208 | 49625 | 154051 | 37473 | 2491 |
| 1999 | 416542 | 72534 | 9958 | 30905 | 15404 | 71584 | 176070 | 37473 | 2614 |
| 2000 | 441463 | 75972 | 10153 | 35165 | 16081 | 71978 | 192364 | 37473 | 4277 |
| 2001 | 477473 | 72007 | 9327 | 29779 | 14837 | 117223 | 192364 | 37473 | 3983 |
| 2002 | 512832 | 70029 | 8384 | 28485 | 14232 | 140346 | 208659 | 37473 | 5224 |
| 2003 | 549152 | 68293 | 8381 | 27571 | 13684 | 162962 | 224953 | 37473 | 6335 |
| 2004 | 576322 | 70559 | 8780 | 31406 | 14429 | 162838 | 242735 | 37473 | 8063 |
| 2005 | 616995 | 67542 | 8871 | 29061 | 12019 | 208850 | 242735 | 37473 | 10444 |



212

EXPECTED COST OF OPERATION
TOTAL COST
DOMESTIC AND FOREIGN

| TYPE OF PLANT : | | COAL | ISOP | FUEL | GAS | NUCL | HYD1 | HYD2 | BNS |
|---|---|---|---|---|---|---|---|---|---|
| YEAR | TOTAL | | | COST BY PLANT TYPE (1000+) | | | | | |
| 1956 | 443498 | 3501 | 17268 | 219865 | 132900 | 8484 | 33390 | 22056 | 6016 |
| 1957 | 550275 | 3631 | 13425 | 240612 | 221908 | 8637 | 33390 | 22056 | 1616 |
| 1958 | 564178 | 3701 | 34859 | 231328 | 323129 | 8773 | 33390 | 22056 | 6933 |
| 1959 | 699346 | 3737 | 27578 | 388724 | 317362 | 8812 | 33390 | 25663 | 4581 |
| 1960 | 702376 | 3699 | 15881 | 504086 | 293073 | 8734 | 49875 | 25663 | 865 |
| 1961 | 961767 | 44489 | 39186 | 504814 | 291314 | 8683 | 66360 | 25663 | 1258 |
| 1962 | 1106131 | 44686 | 26727 | 647818 | 279956 | 8747 | 66360 | 30662 | 1227 |
| 1963 | 1212564 | 145080 | 21133 | 666463 | 272333 | 8797 | 66360 | 30662 | 1189 |
| 1964 | 1227152 | 140743 | 17951 | 663874 | 263576 | 8626 | 100017 | 30662 | 1685 |
| 1965 | 1154257 | 301226 | 13833 | 447978 | 223756 | 8516 | 119708 | 32760 | 1482 |
| 1966 | 1193091 | 334135 | 16020 | 407053 | 211543 | 3491 | 131156 | 32760 | 1929 |
| 1967 | 1197713 | 355503 | 40395 | 350165 | 205656 | 55851 | 142604 | 37473 | 2071 |
| 1968 | 1249168 | 358220 | 36373 | 348267 | 204269 | 108043 | 154051 | 37473 | 2491 |
| 1969 | 1203946 | 355276 | 19965 | 276405 | 181584 | 154560 | 176070 | 37473 | 2614 |
| 2000 | 1329677 | 359734 | 25596 | 358412 | 196020 | 155802 | 192364 | 37473 | 4277 |
| 2001 | 1270570 | 348409 | 19116 | 265936 | 170167 | 253122 | 192364 | 37473 | 3983 |
| 2002 | 1294468 | 330558 | 14326 | 239173 | 155702 | 303354 | 208659 | 37473 | 5224 |
| 2003 | 1322722 | 321427 | 14193 | 221115 | 146848 | 350379 | 224953 | 37473 | 6335 |
| 2004 | 1454453 | 336015 | 22061 | 295831 | 160686 | 351570 | 242735 | 37473 | 8063 |
| 2005 | 1466964 | 312400 | 24705 | 249763 | 140114 | 451331 | 242735 | 37473 | 10444 |

DOMESTIC CONSTRUCTION COSTS

| YEAR | PERIOD | 1984 | 1985 | 1986 | 1987 | 1988 | 1989 | 1990 | 1991 | 1992 | 1993 | 1994 | 1995 | 1996 | 1997 | 1998 | SUM |
|---|---|---|---|---|---|---|---|---|---|---|---|---|---|---|---|---|---|
| 1989 | 1 OTCL | | 1.9 | 17.0 | 43.1 | 21.0 | | | | | | | | | | | 83.0 |
| 1990 | 3 V-31 | | | | | 47.5 | 103.7 | | | | | | | | | | 151.2 |
| 1990 | 1 HA-1 | 2.4 | 6.1 | 18.7 | 32.0 | 21.4 | 6.0 | | | | | | | | | | 86.5 |
| 1990 | 1 HA-2 | 2.4 | 6.1 | 18.7 | 32.0 | 21.4 | 6.0 | | | | | | | | | | 86.5 |
| 1991 | 2 EAA1 | | | 6.9 | 28.5 | 54.3 | 65.8 | 21.6 | | | | | | | | | 188.1 |
| 1991 | 1 HA-3 | | 2.4 | 6.1 | 18.7 | 32.0 | 21.4 | 6.0 | | | | | | | | | 86.5 |
| 1991 | 1 HA-4 | | 2.4 | 6.1 | 18.7 | 32.0 | 21.4 | 6.0 | | | | | | | | | 86.5 |
| 1992 | 2 OTCL | | | | | 3.3 | 34.0 | 86.1 | 42.0 | | | | | | | | 165.9 |
| 1992 | 1 OTCL | | | | | 5.9 | 29.5 | 54.2 | 23.0 | | | | | | | | 112.5 |
| 1992 | 1 HS-1 | | | 6.8 | 6.2 | 25.4 | 43.6 | 29.1 | 8.1 | | | | | | | | 117.9 |
| 1993 | 1 OTCL | | | | | | 5.9 | 29.5 | 54.2 | 23.0 | | | | | | | 112.5 |
| 1993 | 2 EAA2 | | | | | | 22.5 | 113.2 | 208.2 | 88.3 | | | | | | | 432.3 |
| 1994 | 1 HA-5 | | | | | 2.4 | 6.1 | 18.7 | 32.0 | 21.4 | 6.0 | | | | | | 86.5 |
| 1994 | 1 HA-6 | | | | | 2.4 | 6.1 | 18.7 | 32.0 | 21.4 | 6.0 | | | | | | 86.5 |
| 1994 | 1 HA-7 | | | 3.7 | 6.3 | 13.6 | 31.6 | 56.9 | 35.4 | 31.4 | 7.7 | | | | | | 191.5 |
| 1994 | 1 HA-8 | | | 3.7 | 6.3 | 13.6 | 31.6 | 56.9 | 35.4 | 31.4 | 7.7 | | | | | | 191.5 |
| 1994 | 1 HA-9 | | | 3.7 | 6.3 | 13.6 | 31.6 | 56.9 | 35.4 | 31.4 | 7.7 | | | | | | 191.5 |
| 1995 | 2 OCL1 | | | | | | | 22.8 | 94.7 | 213.5 | 221.5 | 71.6 | | | | | 624.1 |
| 1995 | 1 HA10 | | | | 3.7 | 6.3 | 18.6 | 31.6 | 56.9 | 35.4 | 31.4 | 7.7 | | | | | 191.5 |
| 1995 | 1 HA11 | | | | 3.7 | 6.3 | 18.6 | 31.6 | 56.9 | 35.4 | 31.4 | 7.7 | | | | | 191.5 |
| 1995 | 1 HA12 | | | | | | 2.4 | 6.1 | 18.7 | 32.0 | 21.4 | 6.0 | | | | | 86.5 |
| 1995 | 1 HS-2 | | | | | | 1.4 | 3.5 | 10.7 | 18.3 | 12.2 | 3.4 | | | | | 49.5 |
| 1995 | 1 OCL1 | | | | | | | | 11.4 | 47.3 | 106.7 | 110.8 | 35.8 | | | | 312.0 |
| 1996 | 1 V-31 | | | | | | | | | | | 7.9 | 17.3 | | | | 25.2 |
| 1996 | 1 HA13 | | | | | 3.7 | 6.3 | 18.6 | 31.6 | 56.9 | 35.4 | 31.4 | 7.7 | | | | 191.5 |
| 1996 | 1 HA14 | | | | | 3.7 | 6.3 | 18.6 | 31.6 | 56.9 | 35.4 | 31.4 | 7.7 | | | | 191.5 |
| 1997 | 1 WJK1 | | | | | | 5.7 | 9.7 | 28.6 | 48.6 | 87.6 | 54.5 | 48.4 | 11.9 | | | 295.1 |
| 1997 | 1 HA15 | | | | | | 3.7 | 6.3 | 18.6 | 31.6 | 56.9 | 35.4 | 31.4 | 7.7 | | | 191.5 |
| 1997 | 1 HA16 | | | | | | | | 1.7 | 4.2 | 13.0 | 22.2 | 14.8 | 4.2 | | | 60.1 |
| 1997 | 1 HS-3 | | | | | | | | 3.1 | 7.8 | 24.0 | 41.1 | 27.4 | 7.7 | | | 111.2 |
| 1998 | 1 WJK2 | | | | | | | 5.7 | 9.7 | 28.6 | 48.6 | 87.6 | 54.5 | 48.4 | 11.9 | | 295.1 |
| 1998 | 1 HA17 | | | | | | | | | 1.7 | 4.2 | 13.0 | 22.2 | 14.8 | 4.2 | | 60.1 |
| CAD TOTAL | | 4.9 | | 67.8 | | 355.3 | | 707.8 | | 897.1 | | 727.0 | | 558.7 | | 593.2 | |
| | | | 13.9 | | 207.5 | | 530.5 | | 892.7 | | 859.0 | | 653.5 | | 590.7 | | |



244

DOMESTIC CONSTRUCTION COSTS (CONTD.)

| YEAR | # PLANT | 1991 | 1992 | 1993 | 1994 | 1995 | 1996 | 1997 | 1998 | 1999 | 2000 | 2001 | 2002 | 2003 | 2004 | 2005 | SUM |
|---|---|---|---|---|---|---|---|---|---|---|---|---|---|---|---|---|---|
| 1990 | 1 HAIS | | 1.7 | 4.2 | 13.0 | 22.2 | 14.3 | 4.2 | | | | | | | | | 60.1 |
| 1991 | 1 NUKE | 3.7 | 9.7 | 23.6 | 43.5 | 37.6 | 54.5 | 48.4 | 11.9 | | | | | | | | 295.1 |
| 1992 | 1 HAIS | 7.2 | 12.2 | 36.0 | 61.2 | 110.2 | 68.6 | 60.8 | 15.0 | | | | | | | | 371.1 |
| 1993 | 1 HAIS | | | 1.7 | 4.2 | 13.0 | 22.2 | 14.3 | 4.2 | | | | | | | | 60.1 |
| 2000 | 1 HAIS | | 7.2 | 12.2 | 36.0 | 61.2 | 110.2 | 68.6 | 60.8 | 15.0 | | | | | | | 371.1 |
| 2001 | 2 NUKE | | | 11.4 | 19.4 | 57.3 | 97.3 | 175.2 | 109.1 | 96.7 | 23.8 | | | | | | 590.1 |
| 2002 | 1 NUKE | | | | 3.7 | 9.7 | 23.6 | 48.6 | 37.6 | 54.5 | 48.4 | 11.9 | | | | | 295.1 |
| 2003 | 1 HAIS | | | | 7.2 | 12.2 | 36.0 | 61.2 | 110.2 | 68.6 | 60.8 | 15.0 | | | | | 371.1 |
| 2004 | 1 NUKE | | | | | 3.7 | 9.7 | 28.6 | 48.6 | 37.6 | 54.5 | 48.4 | 11.9 | | | | 295.1 |
| 2005 | 1 HAIS | | | | | 7.2 | 12.2 | 36.0 | 61.2 | 110.2 | 68.6 | 60.8 | 15.0 | | | | 371.1 |
| 2006 | 1 HAIS | | | | | | 9.9 | 16.8 | 49.7 | 34.5 | 152.2 | 94.7 | 84.0 | 20.7 | | | 512.6 |
| 2007 | 2 NUKE | | | | | | | 11.4 | 19.4 | 57.3 | 97.3 | 175.2 | 109.1 | 96.7 | 23.8 | | 590.1 |



215

FOREIGN CONSTRUCTION COSTS

| YEAR | PLANT | 1984 | 1985 | 1986 | 1987 | 1988 | 1989 | 1990 | 1991 | 1992 | 1993 | 1994 | 1995 | 1996 | 1997 | 1998 | SUM |
|---|---|---|---|---|---|---|---|---|---|---|---|---|---|---|---|---|---|
| 1989 | 1 DIEL | | 1.9 | 17.9 | 43.1 | 21.0 | | | | | | | | | | | 83.0 |
| 1990 | 3 V-51 | | | | | 51.4 | 112.3 | | | | | | | | | | 163.7 |
| 1990 | 1 HA-1 | 2.6 | 5.5 | 20.2 | 34.6 | 23.1 | 6.5 | | | | | | | | | | 93.5 |
| 1990 | 1 HA-2 | 2.6 | 5.5 | 20.2 | 34.6 | 23.1 | 6.5 | | | | | | | | | | 93.5 |
| 1991 | 1 CAST | | | 5.9 | 23.5 | 34.3 | 66.8 | 21.5 | | | | | | | | | 188.1 |
| 1991 | 1 HA-3 | | 2.6 | 5.5 | 20.2 | 34.6 | 23.1 | 6.5 | | | | | | | | | 93.5 |
| 1991 | 1 HA-4 | | 2.6 | 5.5 | 20.2 | 34.6 | 23.1 | 6.5 | | | | | | | | | 93.5 |
| 1992 | 2 DIEL | | | | | 3.8 | 34.0 | 85.1 | 42.0 | | | | | | | | 165.9 |
| 1992 | 1 DIEL | | | | | 5.9 | 29.5 | 54.2 | 23.0 | | | | | | | | 112.5 |
| 1992 | 1 HB-1 | | | | 4.1 | 19.1 | 51.1 | 53.3 | 35.6 | 10.0 | | | | | | | 144.1 |
| 1993 | 1 DIEL | | | | | | 5.9 | 29.5 | 54.2 | 23.0 | | | | | | | 112.5 |
| 1993 | 2 CAR | | | | | | 22.5 | 113.2 | 208.2 | 88.3 | | | | | | | 432.3 |
| 1994 | 1 HA-5 | | | | | 2.5 | 5.5 | 20.2 | 34.6 | 23.1 | 6.5 | | | | | | 93.5 |
| 1994 | 1 HA-6 | | | | | 2.6 | 5.5 | 20.2 | 34.6 | 23.1 | 6.5 | | | | | | 93.5 |
| 1994 | 1 HA-7 | | | | 4.5 | 7.7 | 22.7 | 38.6 | 69.5 | 43.3 | 38.4 | 9.5 | | | | | 234.2 |
| 1994 | 1 HA-8 | | | | 4.5 | 7.7 | 22.7 | 38.6 | 69.5 | 43.3 | 38.4 | 9.5 | | | | | 234.2 |
| 1994 | 1 HA-9 | | | | 4.5 | 7.7 | 22.7 | 38.6 | 69.5 | 43.3 | 38.4 | 9.5 | | | | | 234.2 |
| 1995 | 2 CLEA | | | | | | | 22.8 | 94.7 | 213.5 | 221.5 | 71.6 | | | | | 624.1 |
| 1995 | 1 HAL5 | | | | 4.5 | 7.7 | 22.7 | 38.6 | 69.5 | 43.3 | 38.4 | 9.5 | | | | | 234.2 |
| 1995 | 1 HAL6 | | | | 4.5 | 7.7 | 22.7 | 38.6 | 69.5 | 43.3 | 38.4 | 9.5 | | | | | 234.2 |
| 1995 | 1 HAL7 | | | | | | 2.6 | 6.5 | 20.2 | 34.6 | 23.1 | 6.5 | | | | | 93.5 |
| 1995 | 1 HB-2 | | | | | | 1.7 | 4.2 | 13.1 | 22.4 | 14.9 | 4.2 | | | | | 60.5 |
| 1995 | 1 CLEA | | | | | | | | 11.4 | 47.3 | 106.7 | 110.3 | 35.8 | | | | 312.0 |
| 1995 | 1 V-51 | | | | | | | | | | | 8.6 | 18.7 | | | | 27.3 |
| 1996 | 1 HAL5 | | | | | 4.5 | 7.7 | 22.7 | 38.6 | 69.5 | 43.3 | 38.4 | 9.5 | | | | 234.2 |
| 1996 | 1 HAL6 | | | | | 4.5 | 7.7 | 22.7 | 38.6 | 69.5 | 43.3 | 38.4 | 9.5 | | | | 234.2 |
| 1997 | 1 JOKE | | | | | | 17.1 | 29.0 | 85.7 | 145.6 | 262.3 | 163.3 | 144.8 | 35.7 | | | 883.4 |
| 1997 | 1 HAL5 | | | | | | 4.5 | 7.7 | 22.7 | 38.6 | 69.5 | 43.3 | 38.4 | 9.5 | | | 234.2 |
| 1997 | 1 HB-3 | | | | | | | | 1.8 | 4.5 | 14.0 | 24.0 | 16.0 | 4.5 | | | 65.0 |
| 1998 | 1 JOKE | | | | | | | | 3.8 | 9.5 | 29.3 | 50.3 | 33.5 | 9.4 | | | 135.8 |
| 1998 | 1 HAL7 | | | | | | | 17.1 | 29.0 | 85.7 | 145.6 | 262.3 | 163.3 | 144.8 | 35.7 | | 883.4 |
| | | | | | | | | | | 1.8 | 4.5 | 14.0 | 24.0 | 16.0 | 4.5 | | 65.0 |
| CAD TOTAL | | 5.3 | | 95.0 | | 490.3 | | 811.9 | | 1156.4 | | 1221.2 | | 1118.8 | | 1224.8 | |
| | | | 20.3 | | 223.4 | | 597.0 | | 1080.9 | | 1281.4 | | 1244.0 | | 1293.2 | | |



212

FOREIGN CONSTRUCTION COSTS (CONT.)

| YEAR | PLANT | 1991 | 1992 | 1993 | 1994 | 1995 | 1996 | 1997 | 1998 | 1999 | 2000 | 2001 | 2002 | 2003 | 2004 | 2005 | SUM |
|---|---|---|---|---|---|---|---|---|---|---|---|---|---|---|---|---|---|
| 1990 | 1 HA13 | | 1.6 | 4.5 | 14.0 | 24.0 | 16.0 | 4.5 | | | | | | | | | 65.0 |
| 1990 | 1 WJKL | 17.1 | 29.0 | 85.7 | 145.6 | 262.3 | 163.3 | 144.8 | 35.7 | | | | | | | | 883.4 |
| 1990 | 1 HA13 | 3.8 | 14.9 | 44.1 | 74.8 | 134.8 | 83.9 | 74.4 | 18.3 | | | | | | | | 453.9 |
| 1991 | 1 HA23 | | | 1.8 | 4.5 | 14.0 | 24.0 | 16.0 | 4.5 | | | | | | | | 65.0 |
| 2000 | 1 HA21 | | 3.8 | 14.9 | 44.1 | 74.8 | 134.8 | 83.9 | 74.4 | 18.3 | | | | | | | 453.9 |
| 2001 | 2 WJKL | | | 34.1 | 58.0 | 171.5 | 291.2 | 524.5 | 326.5 | 289.7 | 71.4 | | | | | | 1766.8 |
| 2002 | 1 WJKL | | | | 17.1 | 29.0 | 85.7 | 145.6 | 262.3 | 165.3 | 144.8 | 35.7 | | | | | 883.4 |
| 2002 | 1 HA22 | | | | 3.8 | 14.9 | 44.1 | 74.8 | 134.8 | 83.9 | 74.4 | 18.3 | | | | | 453.9 |
| 2003 | 1 WJKL | | | | | 17.1 | 29.0 | 85.7 | 145.6 | 262.3 | 163.3 | 144.8 | 35.7 | | | | 883.4 |
| 2003 | 1 HA23 | | | | | 3.8 | 14.9 | 44.1 | 74.8 | 134.8 | 83.9 | 74.4 | 18.3 | | | | 453.9 |
| 2004 | 1 HA24 | | | | | | 12.1 | 20.5 | 60.3 | 103.2 | 185.9 | 115.7 | 102.6 | 25.3 | | | 626.0 |
| 2005 | 2 WJKL | | | | | | | 34.1 | 58.0 | 171.5 | 291.2 | 524.5 | 326.5 | 289.7 | 71.4 | | 1766.8 |



217.

DOMESTIC INC. DURING CONSTR.

| YEAR | PLANT | 1984 | 1985 | 1986 | 1987 | 1988 | 1989 | 1990 | 1991 | 1992 | 1993 | 1994 | 1995 | 1996 | 1997 | 1998 | SUM |
|---|---|---|---|---|---|---|---|---|---|---|---|---|---|---|---|---|---|
| 1989 | 1 SLCL | | 3.0 | 4.5 | 5.7 | 1.4 | | | | | | | | | | | 13.3 |
| 1990 | 3 V-51 | | | | | 5.4 | 6.9 | | | | | | | | | | 13.3 |
| 1990 | 1 HA-1 | 1.8 | 3.3 | 7.5 | 3.9 | 3.4 | 0.4 | | | | | | | | | | 25.4 |
| 1990 | 1 HA-2 | 1.8 | 3.3 | 7.5 | 3.9 | 3.4 | 0.4 | | | | | | | | | | 25.4 |
| 1991 | 1 CAR1 | | | 4.1 | 10.9 | 17.1 | 11.2 | 1.4 | | | | | | | | | 44.7 |
| 1991 | 1 HA-3 | | 1.8 | 3.3 | 7.5 | 3.9 | 3.4 | 0.4 | | | | | | | | | 25.4 |
| 1991 | 1 HA-4 | | 1.8 | 3.3 | 7.5 | 3.9 | 3.4 | 0.4 | | | | | | | | | 25.4 |
| 1992 | 2 SLC1 | | | | | 1.3 | 9.0 | 13.4 | 2.8 | | | | | | | | 26.5 |
| 1992 | 1 SLC2 | | | | | 2.3 | 8.0 | 7.0 | 1.6 | | | | | | | | 20.8 |
| 1992 | 1 HB-1 | | | 2.5 | 4.5 | 10.3 | 12.1 | 4.7 | 0.5 | | | | | | | | 34.6 |
| 1993 | 1 SLC3 | | | | | | 2.3 | 8.0 | 9.0 | 1.6 | | | | | | | 20.8 |
| 1993 | 2 CAR2 | | | | | | 8.7 | 30.6 | 34.7 | 6.1 | | | | | | | 80.1 |
| 1994 | 1 HA-5 | | | | | 1.3 | 3.3 | 7.5 | 8.9 | 3.4 | 0.4 | | | | | | 25.4 |
| 1994 | 1 HA-6 | | | | | 1.3 | 3.3 | 7.5 | 8.9 | 3.4 | 0.4 | | | | | | 25.4 |
| 1994 | 1 HA-7 | | | 4.1 | 5.1 | 13.5 | 17.4 | 23.0 | 10.3 | 5.2 | 0.5 | | | | | | 79.1 |
| 1994 | 1 HA-8 | | | 4.1 | 5.1 | 13.5 | 17.4 | 23.0 | 10.3 | 5.2 | 0.5 | | | | | | 79.1 |
| 1994 | 1 HA-9 | | | 4.1 | 5.1 | 13.5 | 17.4 | 23.0 | 10.3 | 5.2 | 0.5 | | | | | | 79.1 |
| 1995 | 2 SLC4 | | | | | | | 13.6 | 36.3 | 56.7 | 37.1 | 4.7 | | | | | 148.4 |
| 1995 | 1 HA10 | | | | 4.1 | 5.1 | 13.5 | 17.4 | 23.0 | 10.3 | 5.2 | 0.5 | | | | | 79.1 |
| 1995 | 1 HA11 | | | | 4.1 | 5.1 | 13.5 | 17.4 | 23.0 | 10.3 | 5.2 | 0.5 | | | | | 79.1 |
| 1995 | 1 HA12 | | | | | | 1.8 | 3.3 | 7.5 | 8.9 | 3.4 | 0.4 | | | | | 25.4 |
| 1995 | 1 HB-2 | | | | | | 1.0 | 1.9 | 4.3 | 5.1 | 2.0 | 0.2 | | | | | 14.5 |
| 1996 | 1 SLC4 | | | | | | | | 6.8 | 18.2 | 28.4 | 18.5 | 2.4 | | | | 74.2 |
| 1996 | 1 V-51 | | | | | | | | | | | 1.1 | 1.1 | | | | 2.2 |
| 1996 | 1 HA13 | | | | | 4.1 | 5.1 | 13.5 | 17.4 | 23.0 | 10.3 | 5.2 | 0.5 | | | | 79.1 |
| 1996 | 1 HA14 | | | | | 4.1 | 5.1 | 13.5 | 17.4 | 23.0 | 10.3 | 5.2 | 0.5 | | | | 79.1 |
| 1997 | 1 ADK2 | | | | | | 6.4 | 7.9 | 20.7 | 26.7 | 35.4 | 15.9 | 8.0 | 0.7 | | | 121.8 |
| 1997 | 1 HA15 | | | | | | 4.1 | 5.1 | 13.5 | 17.4 | 23.0 | 10.3 | 5.2 | 0.5 | | | 79.1 |
| 1997 | 1 HA16 | | | | | | | | 1.3 | 2.3 | 5.2 | 6.2 | 2.4 | 0.3 | | | 17.6 |
| 1997 | 1 HB-3 | | | | | | | | 2.4 | 4.2 | 9.7 | 11.4 | 4.4 | 0.5 | | | 32.6 |
| 1998 | 1 ADK3 | | | | | | | 6.4 | 7.9 | 20.7 | 26.7 | 35.4 | 15.9 | 8.0 | 0.7 | | 121.8 |
| 1998 | 1 HA17 | | | | | | | | | 1.3 | 2.3 | 5.2 | 6.2 | 2.4 | 0.3 | | 17.6 |
| SUM | TOTAL | 3.7 | 10.8 | 45.1 | 78.7 | 125.0 | 175.0 | 251.7 | 293.2 | 285.5 | 279.5 | 244.9 | 245.3 | 230.6 | 246.3 | 253.4 | |



215

DOMESTIC LNG DIRECT CONSTR. (CONTD.)

| YEAR | # PLANT | 1991 | 1992 | 1993 | 1994 | 1995 | 1996 | 1997 | 1998 | 1999 | 2000 | 2001 | 2002 | 2003 | 2004 | 2005 | SUM |
|---|---|---|---|---|---|---|---|---|---|---|---|---|---|---|---|---|---|
| 1990 | 1 MALE | | 1.5 | 2.3 | 5.2 | 5.2 | 2.4 | 0.5 | | | | | | | | | 17.6 |
| 1991 | 1 WOMEN | 5.4 | 7.9 | 20.7 | 26.7 | 35.4 | 15.9 | 8.0 | 0.7 | | | | | | | | 121.8 |
| 1992 | 1 MALE | 5.0 | 10.0 | 25.1 | 33.5 | 44.5 | 20.0 | 10.1 | 0.9 | | | | | | | | 153.2 |
| 1992 | 1 MALE | | | 1.5 | 2.3 | 5.2 | 5.2 | 2.4 | 0.5 | | | | | | | | 17.6 |
| 2000 | 1 MALE | | 5.0 | 10.0 | 25.1 | 33.5 | 44.5 | 20.0 | 10.1 | 0.9 | | | | | | | 153.2 |
| 2001 | 2 WOMEN | | | 12.8 | 15.8 | 41.4 | 53.5 | 70.8 | 31.8 | 16.0 | 1.4 | | | | | | 243.6 |
| 2002 | 1 WOMEN | | | | 5.4 | 7.9 | 20.7 | 26.7 | 35.4 | 15.9 | 8.0 | 0.7 | | | | | 121.8 |
| 2002 | 1 MALE | | | | 5.0 | 10.0 | 26.1 | 33.5 | 44.5 | 20.0 | 10.1 | 0.9 | | | | | 153.2 |
| 2003 | 1 WOMEN | | | | | 5.4 | 7.9 | 20.7 | 26.7 | 35.4 | 15.9 | 8.0 | 0.7 | | | | 121.8 |
| 2003 | 1 MALE | | | | | 5.0 | 10.0 | 25.1 | 33.5 | 44.5 | 20.0 | 10.1 | 0.9 | | | | 153.2 |
| 2004 | 1 MALE | | | | | | 11.1 | 13.7 | 36.0 | 46.5 | 61.5 | 27.7 | 13.9 | 1.2 | | | 211.6 |
| 2005 | 2 WOMEN | | | | | | | 12.8 | 15.8 | 41.4 | 53.5 | 70.8 | 31.8 | 16.0 | 1.4 | | 243.6 |



219

[illegible] INC. [illegible] COSTS.

| YEAR | # PLANT | 1984 | 1985 | 1986 | 1987 | 1988 | 1989 | 1990 | 1991 | 1992 | 1993 | 1994 | 1995 | 1996 | 1997 | 1998 | SUM |
|---|---|---|---|---|---|---|---|---|---|---|---|---|---|---|---|---|---|
| 1989 | 1 [illegible] | | 3.0 | 4.5 | 3.7 | 1.4 | | | | | | | | | | | 13.3 |
| 1990 | 3 V-51 | | | | | 3.9 | 7.5 | | | | | | | | | | 14.4 |
| 1990 | 1 HA-2 | 2.0 | 3.5 | 3.2 | 3.0 | 3.7 | 3.4 | | | | | | | | | | 27.4 |
| 1990 | 1 HA-2 | 2.0 | 3.5 | 3.2 | 3.0 | 3.7 | 3.4 | | | | | | | | | | 27.4 |
| 1991 | 1 CAS1 | | | 4.1 | 10.9 | 17.1 | 11.2 | 1.4 | | | | | | | | | 44.7 |
| 1991 | 1 HA-3 | | 2.0 | 3.5 | 3.2 | 3.0 | 3.7 | 3.4 | | | | | | | | | 27.4 |
| 1991 | 1 HA-4 | | 2.0 | 3.5 | 3.2 | 3.0 | 3.7 | 3.4 | | | | | | | | | 27.4 |
| 1992 | 2 OIL1 | | | | | 1.3 | 3.0 | 13.4 | 2.8 | | | | | | | | 26.5 |
| 1992 | 1 OIL2 | | | | | 2.3 | 3.0 | 3.0 | 1.8 | | | | | | | | 20.8 |
| 1992 | 1 HB-2 | | | 3.1 | 3.4 | 12.8 | 14.3 | 5.7 | 0.5 | | | | | | | | 42.2 |
| 1993 | 1 OIL2 | | | | | | 2.3 | 3.0 | 9.0 | 1.6 | | | | | | | 20.8 |
| 1993 | 2 CAS2 | | | | | | 3.7 | 30.8 | 34.7 | 8.1 | | | | | | | 80.1 |
| 1994 | 1 HA-3 | | | | | 2.0 | 3.5 | 8.2 | 9.6 | 3.7 | 0.4 | | | | | | 27.4 |
| 1994 | 1 HA-3 | | | | | 2.0 | 3.5 | 8.2 | 9.6 | 3.7 | 0.4 | | | | | | 27.4 |
| 1994 | 1 HA-7 | | | 3.1 | 3.3 | 15.4 | 21.2 | 28.1 | 12.6 | 6.4 | 0.6 | | | | | | 96.7 |
| 1994 | 1 HA-3 | | | 3.1 | 3.3 | 15.4 | 21.2 | 28.1 | 12.6 | 6.4 | 0.6 | | | | | | 96.7 |
| 1994 | 1 HA-3 | | | 3.1 | 3.3 | 15.4 | 21.2 | 28.1 | 12.6 | 6.4 | 0.6 | | | | | | 96.7 |
| 1995 | 2 CCL1 | | | | | | | 13.5 | 36.3 | 56.7 | 37.1 | 4.7 | | | | | 148.4 |
| 1995 | 1 HAL3 | | | | 3.1 | 3.3 | 15.4 | 21.2 | 28.1 | 12.6 | 6.4 | 0.6 | | | | | 96.7 |
| 1995 | 1 HAL1 | | | | 3.1 | 3.3 | 15.4 | 21.2 | 28.1 | 12.6 | 6.4 | 0.6 | | | | | 96.7 |
| 1995 | 1 HAL2 | | | | | | 2.0 | 3.5 | 8.2 | 9.6 | 3.7 | 0.4 | | | | | 27.4 |
| 1995 | 1 HB-2 | | | | | | 1.3 | 2.3 | 5.3 | 6.2 | 2.4 | 0.3 | | | | | 17.7 |
| 1996 | 1 CCL1 | | | | | | | | 6.8 | 18.2 | 28.4 | 18.5 | 2.4 | | | | 74.2 |
| 1996 | 1 V-51 | | | | | | | | | | | 1.2 | 1.2 | | | | 2.4 |
| 1996 | 1 HAL3 | | | | | 3.1 | 6.3 | 16.4 | 21.2 | 28.1 | 12.6 | 6.4 | 0.6 | | | | 96.7 |
| 1996 | 1 HAL4 | | | | | 3.1 | 6.3 | 16.4 | 21.2 | 28.1 | 12.6 | 6.4 | 0.6 | | | | 96.7 |
| 1997 | 1 NJC | | | | | | 19.1 | 23.7 | 62.0 | 80.1 | 106.0 | 47.7 | 24.0 | 2.1 | | | 364.7 |
| 1997 | 1 HAL5 | | | | | | 3.1 | 6.3 | 16.4 | 21.2 | 28.1 | 12.6 | 6.4 | 0.6 | | | 96.7 |
| 1997 | 1 HAL5 | | | | | | | | 1.4 | 2.5 | 5.7 | 6.7 | 2.6 | 0.3 | | | 19.0 |
| 1997 | 1 HB-3 | | | | | | | | 2.9 | 5.1 | 11.8 | 13.9 | 5.4 | 0.6 | | | 39.8 |
| 1998 | 1 NJC | | | | | | | 19.1 | 23.7 | 62.0 | 80.1 | 106.0 | 47.7 | 24.0 | 2.1 | | 364.7 |
| 1998 | 1 HAL7 | | | | | | | | | 1.4 | 2.5 | 5.7 | 6.7 | 2.6 | 0.3 | | 19.0 |
| [illegible] TOTAL | | 4.0 | | 50.2 | | 144.2 | | 313.5 | | 425.9 | | 469.1 | | 469.5 | | 516.9 | |
| | | | 11.7 | | 87.5 | | 213.3 | | 395.5 | | 494.5 | | 500.3 | | 548.4 | | |



220

PACIFIC THE DURING CONSTR. (CONT.)

| YEAR | # PERM | 1991 | 1992 | 1993 | 1994 | 1995 | 1996 | 1997 | 1998 | 1999 | 2000 | 2001 | 2002 | 2003 | 2004 | 2005 | SUM |
|---|---|---|---|---|---|---|---|---|---|---|---|---|---|---|---|---|---|
| 1988 | 1 HALO | | 1.4 | 2.5 | 5.7 | 5.7 | 2.5 | 0.3 | | | | | | | | | 19.0 |
| 1989 | 1 NONE | 17.1 | 23.7 | 62.0 | 80.1 | 106.0 | 47.7 | 24.0 | 2.1 | | | | | | | | 364.7 |
| 1989 | 1 HALO | 9.8 | 12.2 | 31.9 | 41.1 | 54.5 | 24.5 | 12.3 | 1.1 | | | | | | | | 187.4 |
| 1989 | 1 HALO | | 1.4 | 2.5 | 5.7 | 6.7 | 2.5 | 0.3 | | | | | | | | | 19.0 |
| 2000 | 1 HALO | 9.8 | 12.2 | 31.9 | 41.1 | 54.5 | 24.5 | 12.3 | 1.1 | | | | | | | | 187.4 |
| 2001 | 2 NONE | | 33.3 | 47.4 | 124.1 | 160.2 | 212.1 | 95.3 | 48.0 | 4.2 | | | | | | | 729.5 |
| 2002 | 1 NONE | | | 17.1 | 23.7 | 62.0 | 80.1 | 106.0 | 47.7 | 24.0 | 2.1 | | | | | | 364.7 |
| 2002 | 1 HALO | | | 9.8 | 12.2 | 31.9 | 41.1 | 54.5 | 24.5 | 12.3 | 1.1 | | | | | | 187.4 |
| 2003 | 1 NONE | | | | 17.1 | 23.7 | 62.0 | 80.1 | 106.0 | 47.7 | 24.0 | 2.1 | | | | | 364.7 |
| 2003 | 1 HALO | | | | 9.8 | 12.2 | 31.9 | 41.1 | 54.5 | 24.5 | 12.3 | 1.1 | | | | | 187.4 |
| 2004 | 1 HALO | | | | | 13.6 | 16.8 | 44.0 | 56.7 | 75.1 | 33.8 | 17.0 | 1.5 | | | | 258.5 |
| 2005 | 2 NONE | | | | | | 33.3 | 47.4 | 124.1 | 160.2 | 212.1 | 95.3 | 48.0 | 4.2 | | | 729.5 |

DOMESTIC CONSTRUCTION 1 DC

| YEAR | # TEAM | 1984 | 1985 | 1986 | 1987 | 1988 | 1989 | 1990 | 1991 | 1992 | 1993 | 1994 | 1995 | 1996 | 1997 | 1998 | SUM |
|---|---|---|---|---|---|---|---|---|---|---|---|---|---|---|---|---|---|
| 1989 | 1 SLEE | | 2.5 | 21.5 | 49.3 | 22.4 | | | | | | | | | | | 96.2 |
| 1990 | 3 V-51 | | | | | 55.7 | 110.5 | | | | | | | | | | 164.5 |
| 1990 | 1 HA-1 | 4.5 | 9.5 | 25.2 | 40.9 | 24.8 | 6.4 | | | | | | | | | | 111.9 |
| 1990 | 1 HA-2 | 4.5 | 9.5 | 25.2 | 40.9 | 24.8 | 6.4 | | | | | | | | | | 111.9 |
| 1991 | 1 LAN1 | | | 11.0 | 37.5 | 51.4 | 73.0 | 23.1 | | | | | | | | | 232.8 |
| 1991 | 1 HA-3 | | 4.5 | 9.5 | 25.2 | 40.9 | 24.8 | 6.4 | | | | | | | | | 111.9 |
| 1991 | 1 HA-4 | | 4.5 | 9.5 | 25.2 | 40.9 | 24.8 | 6.4 | | | | | | | | | 111.9 |
| 1992 | 2 SLEE | | | | | 5.1 | 43.0 | 97.5 | 44.8 | | | | | | | | 192.4 |
| 1992 | 1 SLE2 | | | | | 3.1 | 37.4 | 63.2 | 24.5 | | | | | | | | 133.4 |
| 1992 | 1 HS-1 | | | 5.8 | 12.7 | 35.7 | 55.7 | 33.8 | 8.7 | | | | | | | | 152.5 |
| 1993 | 1 SLE2 | | | | | | 8.1 | 37.4 | 63.2 | 24.6 | | | | | | | 133.4 |
| 1993 | 2 LAN2 | | | | | | 31.2 | 143.8 | 242.9 | 94.5 | | | | | | | 512.4 |
| 1994 | 1 HA-3 | | | | | 4.3 | 9.5 | 26.2 | 40.9 | 24.8 | 6.4 | | | | | | 111.9 |
| 1994 | 1 HA-5 | | | | | 4.5 | 9.5 | 26.2 | 40.9 | 24.8 | 6.4 | | | | | | 111.9 |
| 1994 | 1 HA-7 | | | 7.8 | 11.4 | 32.0 | 48.9 | 79.8 | 45.7 | 36.6 | 8.2 | | | | | | 270.6 |
| 1994 | 1 HA-8 | | | 7.8 | 11.4 | 32.0 | 48.9 | 79.8 | 45.7 | 36.6 | 8.2 | | | | | | 270.6 |
| 1994 | 1 HA-9 | | | 7.8 | 11.4 | 32.0 | 48.9 | 79.8 | 45.7 | 36.6 | 8.2 | | | | | | 270.6 |
| 1995 | 2 SLE1 | | | | | | | 36.3 | 131.0 | 270.2 | 258.6 | 76.5 | | | | | 772.5 |
| 1995 | 1 HA10 | | | | 7.8 | 11.4 | 32.0 | 48.9 | 79.8 | 45.7 | 36.6 | 8.2 | | | | | 270.6 |
| 1995 | 1 HA11 | | | | 7.8 | 11.4 | 32.0 | 48.9 | 79.8 | 45.7 | 36.6 | 8.2 | | | | | 270.6 |
| 1995 | 1 HA12 | | | | | | 4.5 | 9.8 | 26.2 | 40.9 | 24.8 | 6.4 | | | | | 111.9 |
| 1995 | 1 HS-2 | | | | | | 2.4 | 5.3 | 15.0 | 23.4 | 14.2 | 3.6 | | | | | 64.0 |
| 1996 | 1 SLE3 | | | | | | | | 18.2 | 65.5 | 135.1 | 129.3 | 38.2 | | | | 386.2 |
| 1996 | 1 V-51 | | | | | | | | | | | 9.0 | 18.4 | | | | 27.4 |
| 1996 | 1 HA13 | | | | | 7.8 | 11.4 | 32.0 | 48.9 | 79.8 | 45.7 | 36.6 | 8.2 | | | | 270.6 |
| 1996 | 1 HA14 | | | | | 7.8 | 11.4 | 32.0 | 48.9 | 79.8 | 45.7 | 36.6 | 8.2 | | | | 270.6 |
| 1997 | 1 NJN2 | | | | | | 12.1 | 17.6 | 49.4 | 75.4 | 123.0 | 70.5 | 56.4 | 12.6 | | | 416.9 |
| 1997 | 1 HA15 | | | | | | 7.8 | 11.4 | 32.0 | 48.9 | 79.8 | 45.7 | 36.6 | 8.2 | | | 270.6 |
| 1997 | 1 HA16 | | | | | | | | 3.0 | 6.5 | 18.2 | 28.4 | 17.2 | 4.4 | | | 77.7 |
| 1997 | 1 HB-3 | | | | | | | | 5.5 | 12.0 | 33.7 | 52.6 | 31.9 | 8.2 | | | 143.8 |
| 1998 | 1 NJN2 | | | | | | | 12.1 | 17.6 | 49.4 | 75.4 | 123.0 | 70.5 | 56.4 | 12.6 | | 416.9 |
| 1998 | 1 HA17 | | | | | | | | | 3.0 | 6.5 | 18.2 | 28.4 | 17.2 | 4.4 | | 77.7 |
| SUM TOTAL | | 3.0 | 29.7 | 132.9 | 285.2 | 431.3 | 705.5 | 959.5 | 1185.9 | 1182.6 | 1138.5 | 972.0 | 898.8 | 789.4 | 537.0 | 846.7 | |



22

DOMESTIC CONSTRUCTION & ICC (CONTD.)

| YEAR | PERM | 1991 | 1992 | 1993 | 1994 | 1995 | 1996 | 1997 | 1998 | 1999 | 2000 | 2001 | 2002 | 2003 | 2004 | 2005 | SUM |
|---|---|---|---|---|---|---|---|---|---|---|---|---|---|---|---|---|---|
| 1990 | 1 MAES | | 3.0 | 5.5 | 13.2 | 23.4 | 17.2 | 4.4 | | | | | | | | | 77.7 |
| 1991 | 1 WORK | 12.1 | 17.6 | 49.4 | 75.4 | 123.0 | 70.5 | 56.4 | 12.6 | | | | | | | | 416.9 |
| 1992 | 1 MAES | 15.2 | 22.1 | 62.1 | 94.8 | 154.7 | 88.6 | 70.9 | 15.9 | | | | | | | | 524.4 |
| 1993 | 1 MAES | | | 3.0 | 5.5 | 13.2 | 23.4 | 17.2 | 4.4 | | | | | | | | 77.7 |
| 2000 | 1 MAES | | 15.2 | 22.1 | 62.1 | 94.8 | 154.7 | 88.6 | 70.9 | 15.9 | | | | | | | 524.4 |
| 2001 | 2 WORK | | | 24.2 | 35.2 | 98.7 | 150.7 | 246.0 | 140.9 | 112.8 | 25.2 | | | | | | 833.8 |
| 2002 | 1 WORK | | | | 12.1 | 17.6 | 49.4 | 75.4 | 123.0 | 70.5 | 56.4 | 12.6 | | | | | 416.9 |
| 2003 | 1 MAES | | | | 15.2 | 22.1 | 62.1 | 94.8 | 154.7 | 88.6 | 70.9 | 15.9 | | | | | 524.4 |
| 2003 | 1 WORK | | | | | 12.1 | 17.6 | 49.4 | 75.4 | 123.0 | 70.5 | 56.4 | 12.6 | | | | 416.9 |
| 2003 | 1 MAES | | | | | 15.2 | 22.1 | 62.1 | 94.8 | 154.7 | 88.6 | 70.9 | 15.9 | | | | 524.4 |
| 2004 | 1 MAES | | | | | | 21.0 | 30.5 | 85.7 | 130.9 | 213.7 | 122.4 | 98.0 | 21.9 | | | 724.2 |
| 2005 | 2 WORK | | | | | | | 24.2 | 35.2 | 98.7 | 150.7 | 246.0 | 140.9 | 112.8 | 25.2 | | 833.8 |



222

FOREIGN CONSTRUCTION , INC.

| YEAR | PERIOD | 1984 | 1985 | 1986 | 1987 | 1988 | 1989 | 1990 | 1991 | 1992 | 1993 | 1994 | 1995 | 1996 | 1997 | 1998 | SUM |
|---|---|---|---|---|---|---|---|---|---|---|---|---|---|---|---|---|---|
| 1989 | 1 OLC1 | | 2.5 | 21.5 | 49.1 | 22.4 | | | | | | | | | | | 96.2 |
| 1990 | 1 V-31 | | | | | 55.4 | 119.8 | | | | | | | | | | 176.1 |
| 1990 | 1 HA-1 | | 4.0 | 10.1 | 23.3 | 44.2 | 26.8 | 6.9 | | | | | | | | | 121.0 |
| 1990 | 1 HA-2 | | 4.0 | 10.1 | 23.3 | 44.2 | 26.8 | 6.9 | | | | | | | | | 121.0 |
| 1991 | 1 LAN1 | | | | 11.0 | 57.5 | 81.4 | 78.0 | 23.0 | | | | | | | | 232.8 |
| 1991 | 1 HA-3 | | | 4.0 | 10.1 | 23.3 | 44.2 | 26.8 | 6.9 | | | | | | | | 121.0 |
| 1991 | 1 HA-4 | | | 4.0 | 10.1 | 23.3 | 44.2 | 26.8 | 6.9 | | | | | | | | 121.0 |
| 1992 | 2 OLC1 | | | | | | 5.1 | 45.0 | 99.5 | 44.3 | | | | | | | 192.4 |
| 1992 | 1 OLC2 | | | | | | 3.1 | 37.4 | 63.2 | 24.6 | | | | | | | 133.4 |
| 1992 | 1 HA-1 | | | | 7.1 | 15.5 | 43.7 | 68.1 | 41.3 | 10.6 | | | | | | | 186.3 |
| 1993 | 1 OLC2 | | | | | | | 8.1 | 37.4 | 63.2 | 24.6 | | | | | | 133.4 |
| 1993 | 2 LAN2 | | | | | | | 31.2 | 143.8 | 242.9 | 94.5 | | | | | | 512.4 |
| 1994 | 1 HA-5 | | | | | | 4.6 | 10.1 | 23.3 | 44.2 | 26.8 | 6.9 | | | | | 121.0 |
| 1994 | 1 HA-6 | | | | | | 4.6 | 10.1 | 28.3 | 44.2 | 26.8 | 6.9 | | | | | 121.0 |
| 1994 | 1 HA-7 | | | | 9.6 | 14.0 | 39.2 | 59.8 | 97.6 | 55.9 | 44.8 | 10.0 | | | | | 330.9 |
| 1994 | 1 HA-8 | | | | 9.6 | 14.0 | 39.2 | 59.8 | 97.6 | 55.9 | 44.8 | 10.0 | | | | | 330.9 |
| 1994 | 1 HA-9 | | | | 9.6 | 14.0 | 39.2 | 59.8 | 97.6 | 55.9 | 44.8 | 10.0 | | | | | 330.9 |
| 1995 | 2 OLC1 | | | | | | | | 36.3 | 131.0 | 270.2 | 258.6 | 76.3 | | | | 772.5 |
| 1995 | 1 HA10 | | | | | 9.6 | 14.0 | 39.2 | 59.8 | 97.6 | 55.9 | 44.8 | 10.0 | | | | 330.9 |
| 1995 | 1 HA11 | | | | | 9.6 | 14.0 | 39.2 | 59.8 | 97.6 | 55.9 | 44.8 | 10.0 | | | | 330.9 |
| 1995 | 1 HA12 | | | | | | | 4.6 | 10.1 | 28.3 | 44.2 | 26.8 | 6.9 | | | | 121.0 |
| 1995 | 1 HB-2 | | | | | | | 3.0 | 6.5 | 18.3 | 28.6 | 17.3 | 4.5 | | | | 78.2 |
| 1996 | 1 OLC1 | | | | | | | | | 18.2 | 65.5 | 135.1 | 129.3 | 38.2 | | | 386.2 |
| 1996 | 1 V-31 | | | | | | | | | | | | 9.7 | 20.0 | | | 29.7 |
| 1996 | 1 HA13 | | | | | | 4.6 | 14.0 | 39.2 | 59.8 | 97.6 | 55.9 | 44.8 | 10.0 | | | 330.9 |
| 1996 | 1 HA14 | | | | | | 4.6 | 14.0 | 39.2 | 59.8 | 97.6 | 55.9 | 44.8 | 10.0 | | | 330.9 |
| 1997 | 2 WOKC | | | | | | | 36.2 | 52.7 | 147.8 | 225.7 | 368.3 | 210.9 | 168.9 | 37.8 | | 1248.2 |
| 1997 | 1 HA15 | | | | | | | 9.6 | 14.0 | 39.2 | 59.8 | 97.6 | 55.9 | 44.8 | 10.0 | | 330.9 |
| 1997 | 1 HA16 | | | | | | | | | 3.2 | 7.0 | 19.7 | 30.7 | 18.6 | 4.8 | | 84.0 |
| 1997 | 1 HB-3 | | | | | | | | | 6.7 | 14.6 | 41.2 | 64.2 | 38.9 | 10.0 | | 175.6 |
| 1998 | 1 WOKC | | | | | | | | 36.2 | 52.7 | 147.8 | 225.7 | 368.3 | 210.9 | 168.9 | 37.8 | 1248.2 |
| 1998 | 1 HA17 | | | | | | | | | | 3.2 | 7.0 | 19.7 | 30.7 | 18.6 | 4.8 | 84.0 |
| SUM TOTAL | | 9.2 | | 145.2 | | 555.0 | | 1125.4 | | 1582.3 | | 1690.4 | | 1588.4 | | 1741.7 | |
| | | | 51.0 | | 311.0 | | 812.4 | | 1457.4 | | 1775.9 | | 1744.9 | | 1641.6 | | |



224

[illegible] CONSTRUCTION [illegible] (CONTD.)

| YEAR | PERIOD | 1991 | 1992 | 1993 | 1994 | 1995 | 1996 | 1997 | 1998 | 1999 | 2000 | 2001 | 2002 | 2003 | 2004 | 2005 | SUM |
|---|---|---|---|---|---|---|---|---|---|---|---|---|---|---|---|---|---|
| 1990 | 1 HA15 | | 3.2 | 7.0 | 19.7 | 30.7 | 13.6 | 4.8 | | | | | | | | | 84.0 |
| 1990 | 1 NUKE | 36.2 | 52.7 | 147.8 | 225.7 | 353.3 | 210.9 | 168.9 | 37.8 | | | | | | | | 1248.2 |
| 1991 | 1 HA19 | 13.6 | 27.1 | 75.9 | 116.0 | 189.3 | 108.4 | 86.8 | 19.4 | | | | | | | | 641.4 |
| 1992 | 1 HA20 | | | 3.2 | 7.0 | 19.7 | 30.7 | 13.6 | 4.8 | | | | | | | | 84.0 |
| 2000 | 1 HA21 | | 13.6 | 27.1 | 75.9 | 116.0 | 189.3 | 108.4 | 86.8 | 19.4 | | | | | | | 641.4 |
| 2001 | 2 NUKE | | | 72.4 | 105.4 | 295.6 | 451.3 | 736.6 | 421.9 | 337.7 | 75.5 | | | | | | 2496.3 |
| 2002 | 1 NUKE | | | | 36.2 | 52.7 | 147.8 | 225.7 | 368.3 | 210.9 | 168.9 | 37.8 | | | | | 1248.2 |
| 2002 | 1 HA22 | | | | 13.6 | 27.1 | 75.9 | 116.0 | 189.3 | 108.4 | 86.8 | 19.4 | | | | | 641.4 |
| 2003 | 1 NUKE | | | | | 36.2 | 52.7 | 147.8 | 225.7 | 368.3 | 210.9 | 168.9 | 37.8 | | | | 1248.2 |
| 2003 | 1 HA23 | | | | | 13.6 | 27.1 | 75.9 | 116.0 | 189.3 | 108.4 | 86.8 | 19.4 | | | | 641.4 |
| 2004 | 1 HA24 | | | | | | 25.6 | 37.3 | 104.7 | 159.9 | 261.0 | 149.5 | 119.7 | 26.8 | | | 884.5 |
| 2005 | 2 NUKE | | | | | | | 72.4 | 105.4 | 295.6 | 451.3 | 736.6 | 421.9 | 337.7 | 75.5 | | 2496.3 |



225

NUCLEAR FUEL INVESTMENT

| YEAR | # PLANT | 1989 | 1990 | 1991 | 1992 | 1993 | 1994 | 1995 | 1996 | 1997 | 1998 | 1999 | 2000 | 2001 | 2002 | 2003 | SUM |
|---|---|---|---|---|---|---|---|---|---|---|---|---|---|---|---|---|---|
| 1991 | 1 LAKE | 0.4 | 3.2 | | | | | | | | | | | | | | 3.6 |
| 1993 | 2 LAKE | | | 0.8 | 7.0 | | | | | | | | | | | | 7.8 |
| ALL | TOTAL | 0.4 | | 0.8 | | 0.0 | | 0.0 | | 0.0 | | 0.0 | | | | | |
| 0.0 | 0.0 | | | | | | | | | | | | | | | | |
| | | | 3.2 | | 7.0 | | 0.0 | | 0.0 | | 0.0 | | | | | | |
| 0.0 | 0.0 | | | | | | | | | | | | | | | | |
| | | | | | | | | | | | | | | 11.4 | | | |

[illegible] [illegible] INVESTMENT

| YEAR | * PLANT | 1987 | 1988 | 1989 | 1990 | 1991 | 1992 | 1993 | 1994 | 1995 | 1996 | 1997 | 1998 | 1999 | 2000 | 2001 | SUM |
|---|---|---|---|---|---|---|---|---|---|---|---|---|---|---|---|---|---|
| 1989 | 1 [illegible] | 1.3 | 11.7 | | | | | | | | | | | | | | 13.0 |
| 1990 | 3 [illegible] | | 3.3 | 32.7 | | | | | | | | | | | | | 36.1 |
| 1991 | 2 [illegible] | | | | 2.3 | 23.4 | | | | | | | | | | | 25.9 |
| 1992 | 1 [illegible] | | | | 1.8 | 16.3 | | | | | | | | | | | 18.1 |
| 1993 | 1 [illegible] | | | | | 1.8 | 16.3 | | | | | | | | | | 18.1 |
| 1994 | 2 [illegible] | | | | | | | 5.1 | 47.0 | | | | | | | | 52.1 |
| 1995 | 1 [illegible] | | | | | | | | 2.6 | 23.5 | | | | | | | 26.0 |
| 1996 | 1 [illegible] | | | | | | | | 0.6 | 5.4 | | | | | | | 6.0 |
| 1997 | 1 [illegible] | | | | | | | | | 11.7 | 107.1 | | | | | | 118.8 |
| 1998 | 1 [illegible] | | | | | | | | | | 11.7 | 107.1 | | | | | 118.8 |
| 1999 | 1 [illegible] | | | | | | | | | | | 11.7 | 107.1 | | | | 118.8 |
| 2001 | 2 [illegible] | | | | | | | | | | | | | 23.3 | 214.3 | | 237.6 |
| 2002 | 1 [illegible] | | | | | | | | | | | | | | 11.7 | 107.1 | 118.8 |
| [illegible] | TOTAL | 1.3 | 15.2 | 32.6 | 4.3 | 41.5 | 16.3 | 5.1 | 50.1 | 40.6 | 118.8 | 119.8 | 107.1 | 23.3 | 225.9 | 118.8 | |

CAPITAL CASH FLOW SUMMARY

| YEAR | FUEL DOM. | FUEL FOR. | FUEL TOTAL | CONSTRUCTION DOM. | CONSTRUCTION FOR. | CONSTRUCTION TOTAL | IDC DOM. | IDC FOR. | IDC TOTAL | GR. TOT. |
|---|---|---|---|---|---|---|---|---|---|---|
| 1984 | 0.0 | 0.0 | 0.0 | 4.9 | 5.3 | 10.2 | 3.7 | 4.0 | 7.6 | 17.8 |
| 1985 | 0.0 | 0.0 | 0.0 | 18.9 | 20.3 | 39.2 | 10.8 | 11.7 | 22.5 | 61.6 |
| 1986 | 0.0 | 0.0 | 0.0 | 87.8 | 95.0 | 182.7 | 45.1 | 50.2 | 95.4 | 278.1 |
| 1987 | 0.0 | 2.3 | 2.3 | 207.5 | 223.4 | 430.9 | 78.7 | 87.6 | 166.3 | 598.4 |
| 1988 | 0.0 | 15.2 | 15.2 | 356.3 | 390.8 | 746.1 | 126.0 | 144.2 | 270.2 | 1031.5 |
| 1989 | 0.4 | 32.0 | 32.4 | 530.5 | 599.0 | 1129.5 | 175.0 | 213.3 | 388.3 | 1550.8 |
| 1990 | 0.2 | 7.5 | 7.5 | 707.8 | 811.9 | 1519.7 | 251.7 | 313.5 | 565.2 | 2092.4 |
| 1991 | 0.0 | 42.5 | 42.2 | 892.7 | 1060.9 | 1953.6 | 293.2 | 396.5 | 689.7 | 2685.5 |
| 1992 | 7.0 | 16.5 | 23.5 | 897.1 | 1156.4 | 2053.5 | 285.5 | 425.9 | 711.4 | 2788.2 |
| 1993 | 0.0 | 9.1 | 9.1 | 859.6 | 1281.4 | 2140.3 | 279.5 | 494.5 | 774.0 | 2919.4 |
| 1994 | 0.0 | 50.1 | 50.1 | 727.0 | 1221.2 | 1948.3 | 244.9 | 469.1 | 714.1 | 2712.5 |
| 1995 | 0.0 | 49.5 | 49.5 | 553.5 | 1244.6 | 1798.1 | 245.3 | 500.3 | 745.6 | 2684.3 |
| 1996 | 0.0 | 116.8 | 113.3 | 558.7 | 1118.8 | 1677.5 | 230.6 | 469.5 | 700.2 | 2496.5 |
| 1997 | 0.0 | 116.8 | 113.5 | 540.7 | 1293.2 | 1833.9 | 246.3 | 548.4 | 794.7 | 2797.4 |
| 1998 | 0.0 | 107.1 | 107.1 | 553.2 | 1264.8 | 1818.0 | 253.4 | 516.9 | 770.3 | 2695.5 |
| 1999 | 0.0 | 23.3 | 23.3 | 613.7 | 1508.3 | 1927.0 | 262.4 | 538.9 | 801.3 | 2751.7 |
| 2000 | 0.0 | 225.9 | 225.5 | 627.9 | 1244.7 | 1874.6 | 269.5 | 531.0 | 800.5 | 2901.1 |
| 2001 | 0.0 | 113.8 | 113.8 | 667.6 | 1387.1 | 2054.7 | 291.6 | 595.5 | 887.1 | 3060.6 |
| 2002 | 0.0 | 107.1 | 107.1 | 725.9 | 1404.7 | 2131.6 | 319.2 | 605.9 | 925.1 | 3163.9 |
| 2003 | 0.0 | 23.3 | 23.3 | 752.1 | 1467.8 | 2219.9 | 311.0 | 560.8 | 871.8 | 3115.0 |
| 2004 | 0.0 | 225.9 | 225.9 | 752.1 | 1348.9 | 2101.0 | 285.8 | 493.2 | 779.0 | 3105.9 |
| 2005 | 0.0 | 113.8 | 113.8 | 673.8 | 1108.6 | 1782.4 | 227.2 | 367.0 | 594.1 | 2495.3 |

# APPENDIX 3.3

## LOAD FLOW
## AND
## TRANSIENT STABILITY PLOTS

## APPENDIX 3.3
## LOAD FLOW AND TRANSIENT STABILITY CASE INDEX FOR LAKHRA

| Case Description | | | Case Number | | |
|---|---|---|---|---|---|
| Year | Power Plant Location | Generation/Transmission | High Wtr Pk Load | Low Wtr Pk Load | Low Wtr Off Peak |
| 1991 | Jamshoro | 1 x 300 MW Connected to 500 kV Jamshoro Bus | 1 | 2 | 3 |
| 1991 | Lakhra | 1 x 300 MW Connected via 2-220 kV Lakhra-Jamshoro Ckts | 4 | 5 | 6 |
| 1991 | Lakhra | 1 x 300 MW Connected via 500 kV Loop to Jamshoro-Dadu Ckt | 7 | 8 | 9 |
| 1993 | Jamshoro | 3 x 300 MW Connected to 500 kV Jamshoro Bus | 10 | 11 | 12 |
| 1993 | Lakhra | 3 x 300 MW Connected via 4-200 kV Lakhra-Jamshoro Ckts | 13 | 14 | 15 |
| 1993 | Lakhra | 3 x 300 MW Connected via 500 kV Loop to Jamshoro-Dadu Ckt | 16 | 17 | 18 |
| 1995 | Jamshoro | 3 x 300 MW Connected to 500 kV Jamshoro Bus | 19 | 20 | 21 |
| 1995 | Lakhra | 3 x 300 MW Connected via 4-220 kV Lakhra-Jamshoro Ckts | 22 | 23 | 24 |
| 1995 | Lakhra | 3 x 300 MW Connected via 500 kV Loop to Jamshoro-Dadu Ckt | 25 | 26 | 27 |
| 1991 | Lakhra | Transient Stability Test - 220 kV Ckt Outaged | - | 28 | - |
| 1993 | Jamshoro | Transient Stability Test - 500 kV Ckt Outaged | - | - | 29 |
| 1993 | Lakhra | Transient Stability Test - 500 kV Ckt Outaged | 30 | - | - |

Note - Load flow case index for imported coal studies follows Case 30.

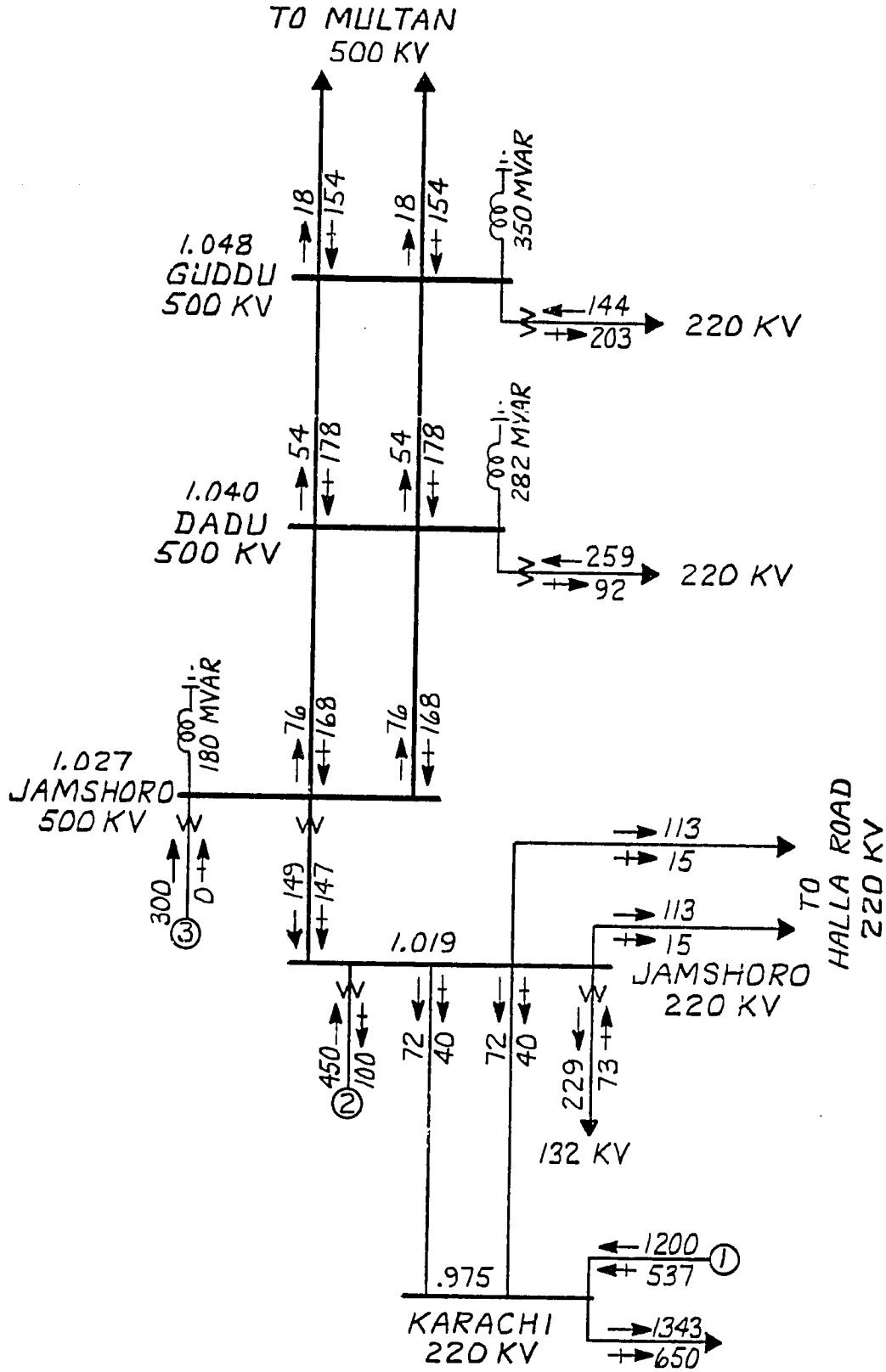


GENERATOR DETAILS

| ITEM | DESCRIPTION | MW |
|---|---|---|
| 1.0 | KARACHI EQUIV. | — |
| 2.1 | JAMSHORO OIL-1 | 250 |
| 2.2 | JAMSHORO OIL-2 | 210 |
| 3.0 | JAMSHORO COAL-1 | 300 |

LAKHRA POWER FEASIBILITY STUDY

LOAD 7740 YEAR 1991 SEASON HIGH WATER

CASE 1

ALT 1 - 300 MW COAL UNIT ON JAMSHORO 500 KV

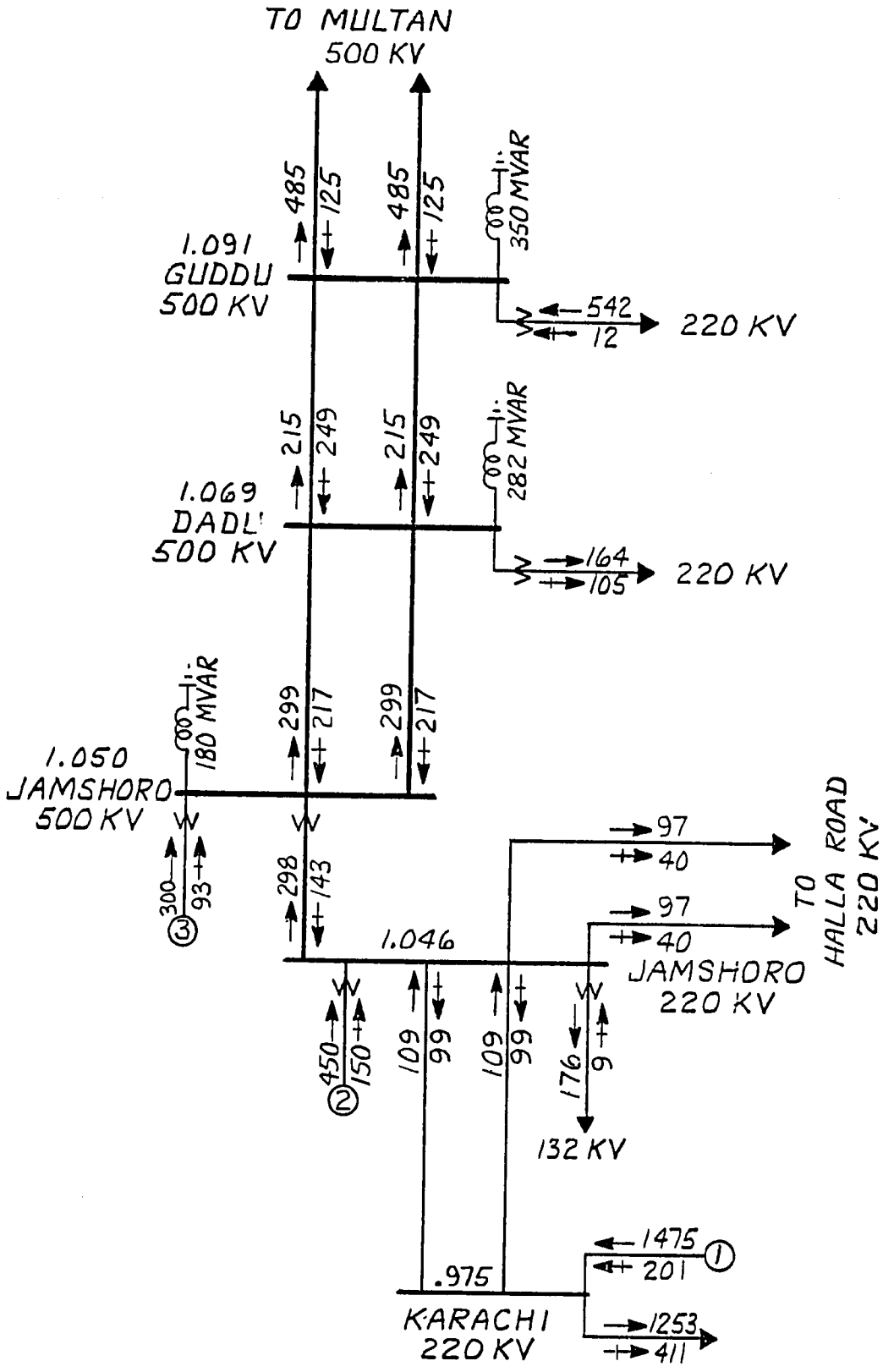


GENERATOR DETAILS

| ITEM | DESCRIPTION | MW |
|---|---|---|
| 1.0 | KARACHI EQUIV. | – |
| 2.1 | JAMSHORO OIL-1 | 250 |
| 2.2 | JAMSHORO OIL-2 | 210 |
| 3.0 | JAMSHORO COAL-1 | 300 |

LAKHRA POWER FEASIBILITY STUDY

LOAD 7220 YEAR 1991 SEASON LOW WATER

CASE 2

ALT 1 - 300MW COAL UNIT ON

JAMSHORO 500 KV

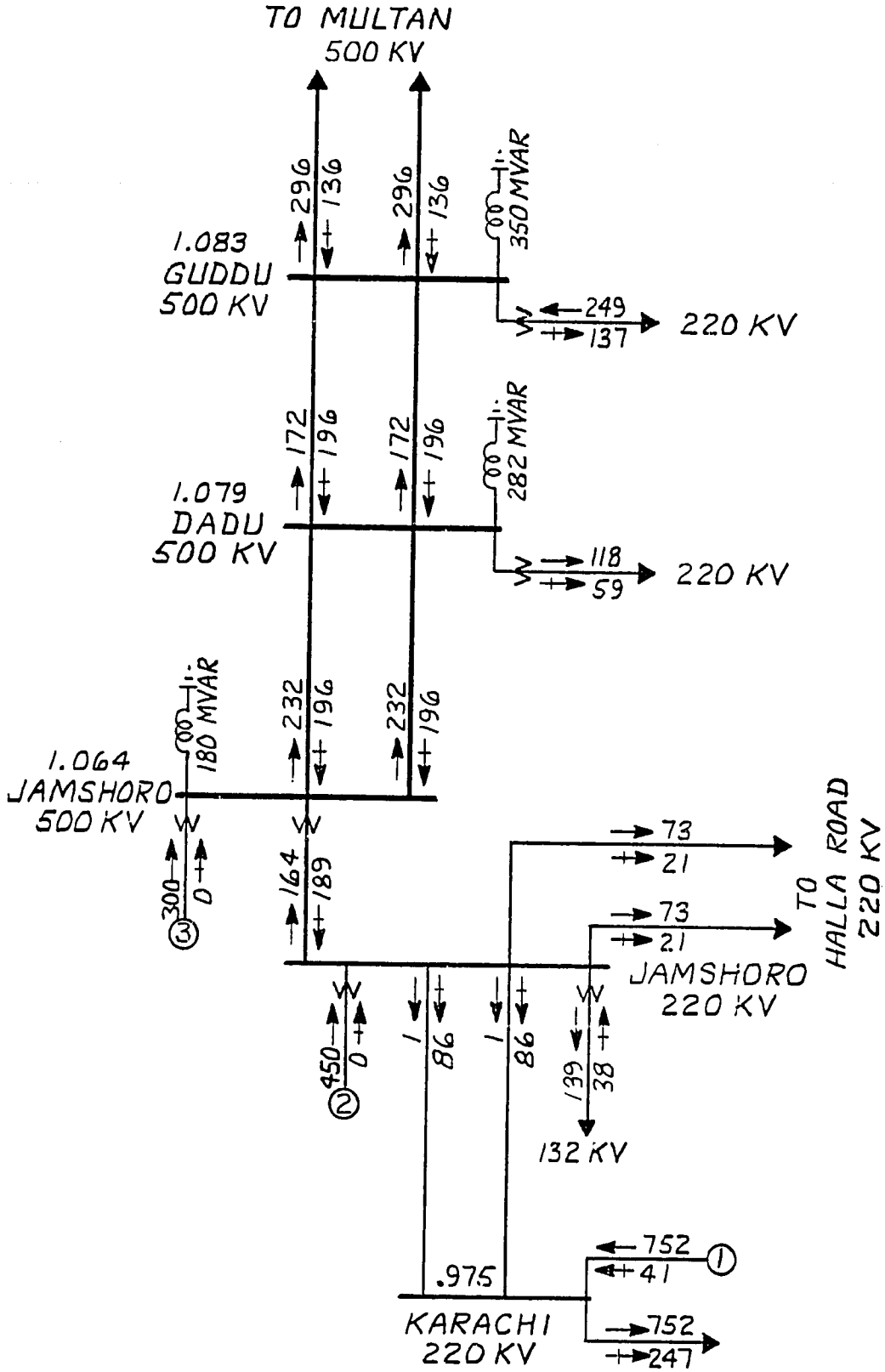


GENERATOR DETAILS

| ITEM | DESCRIPTION | MW |
|---|---|---|
| 1.0 | KARACHI EQUIV. | – |
| 2.1 | JAMSHORO OIL-1 | 250 |
| 2.2 | JAMSHORO OIL-2 | 210 |
| 3.0 | JAMSHORO COAL-1 | 300 |

LAKHRA POWER FEASIBILITY STUDY

LOAD 4332 YEAR 1991 SEASON LOW WATER

CASE 3

ALT 1 - 300 MW COAL UNIT ON JAMSHORO 500 KV

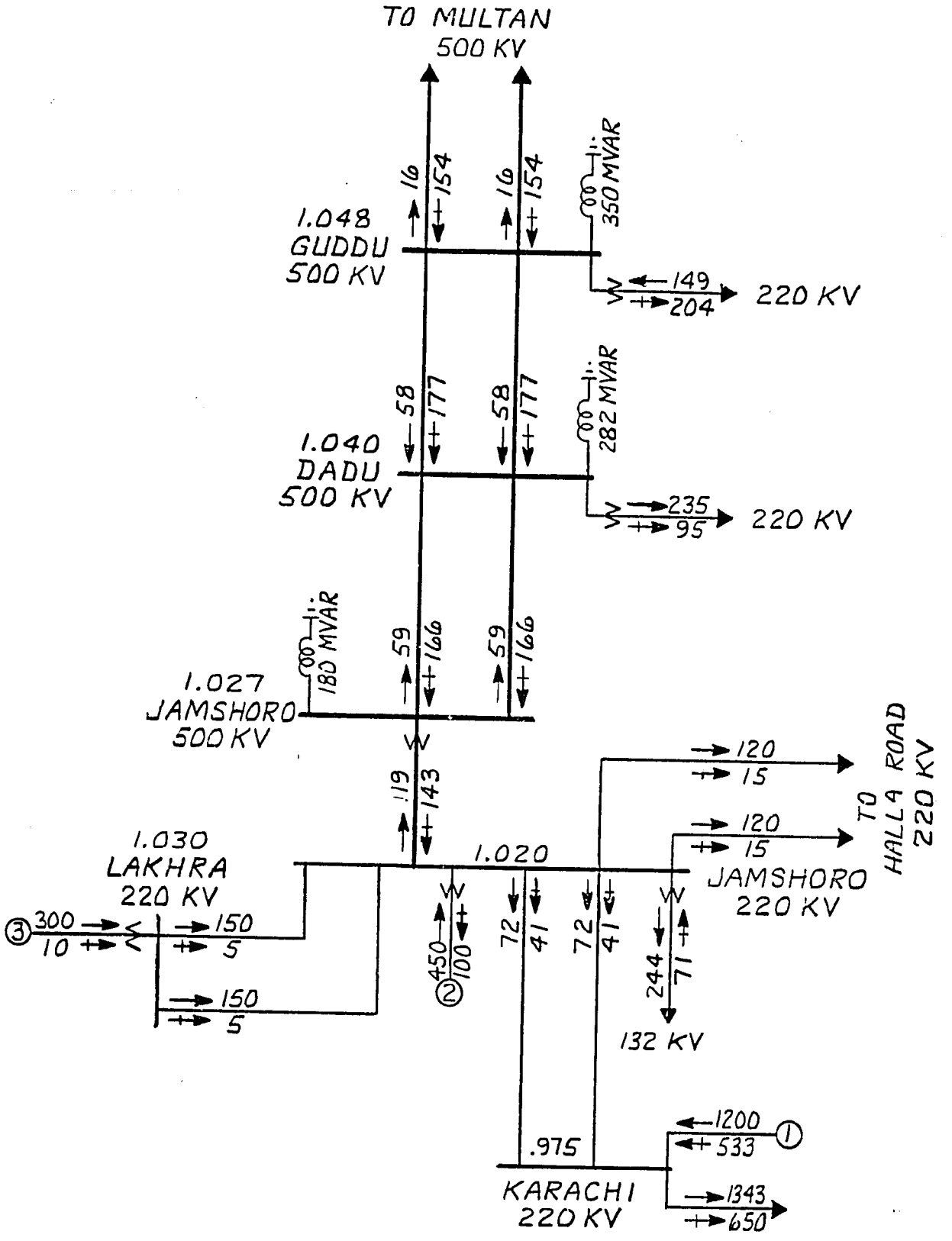


GENERATOR DETAILS

| ITEM | DESCRIPTION | MW |
|---|---|---|
| 1.0 | KARACHI EQUIV. | — |
| 2.1 | JAMSHORO OIL-1 | 250 |
| 2.2 | JAMSHORO OIL-2 | 210 |
| 3.0 | LAKHRA COAL-1 | 300 |

LAKHRA POWER FEASIBILITY STUDY

LOAD 7740 YEAR 1991 SEASON HIGH WATER

CASE 4

ALT 2 - 300 MW COAL UNIT AT LAKHRA

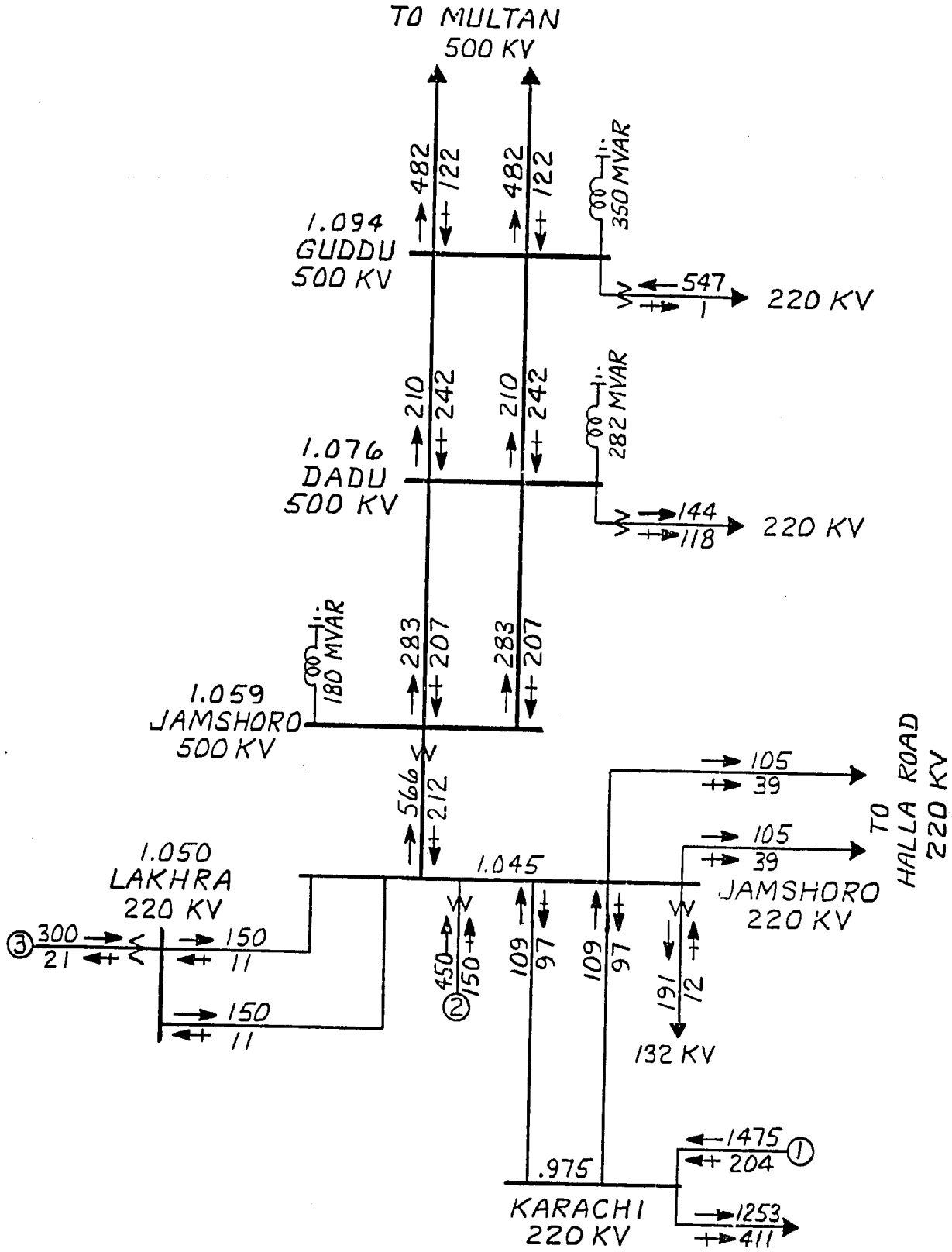


GENERATOR DETAILS

| ITEM | DESCRIPTION | MW |
|---|---|---|
| 1.0 | KARACHI EQUIV. | — |
| 2.1 | JAMSHORO OIL-1 | 250 |
| 2.2 | JAMSHORO OIL-2 | 210 |
| 3.0 | LAKHRA COAL-1 | 300 |

LAKHRA POWER FEASIBILITY STUDY

LOAD 7220 YEAR 1991 SEASON LOW WATER

CASE 5

ALT 2-300 MW COAL UNIT AT LAKHRA

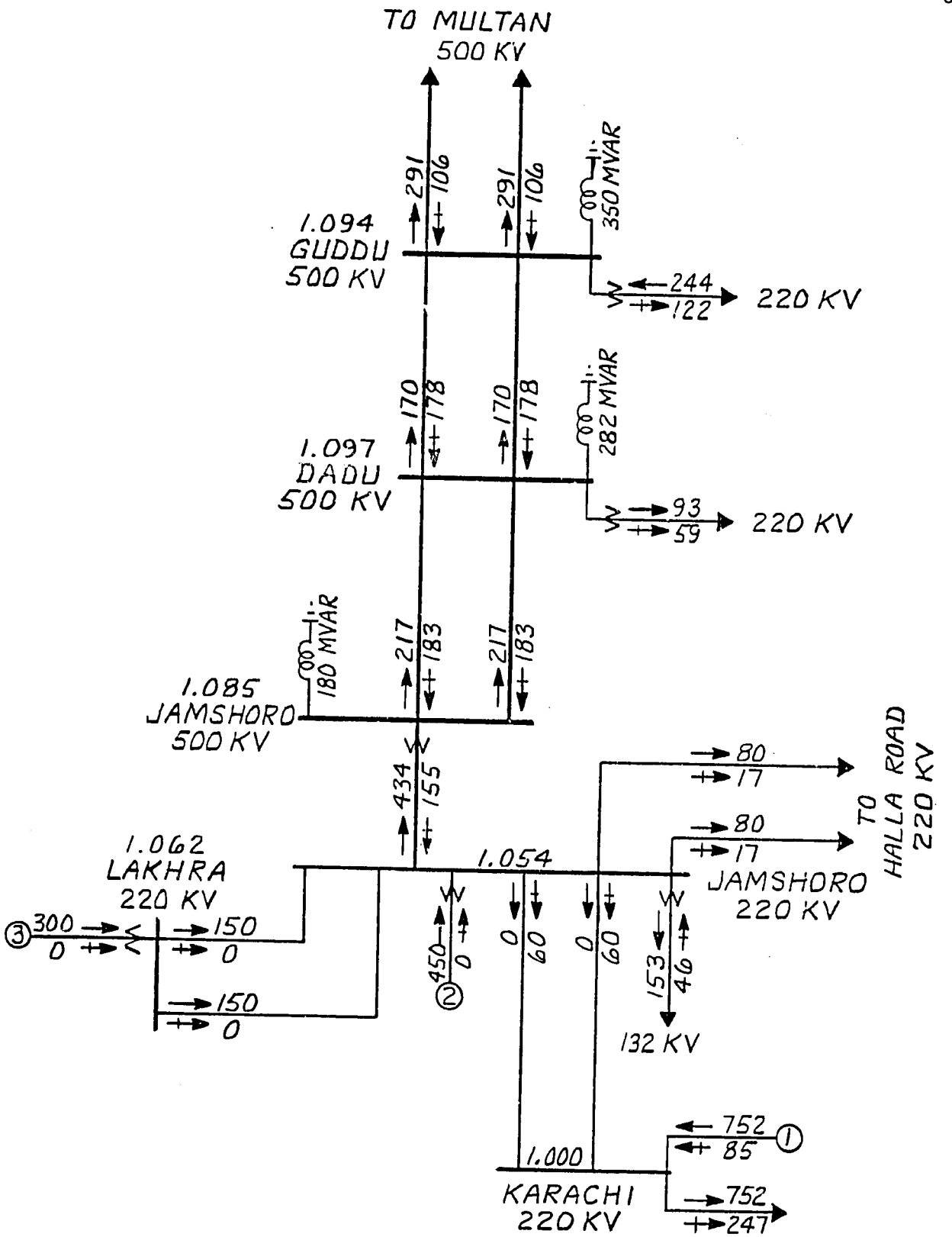


GENERATOR DETAILS

| ITEM | DESCRIPTION | MW |
|---|---|---|
| 1.0 | KARACHI EQUIV. | — |
| 2.1 | JAMSHORO OIL-1 | 250 |
| 2.2 | JAMSHORO OIL-2 | 210 |
| 3.0 | LAKHRA COAL-1 | 300 |

LAKHRA POWER FEASIBILITY STUDY

LOAD 4332 YEAR 1991 SEASON LOW WATER

CASE 6

ALT 2 - 300 MW COAL UNIT AT LAKHRA

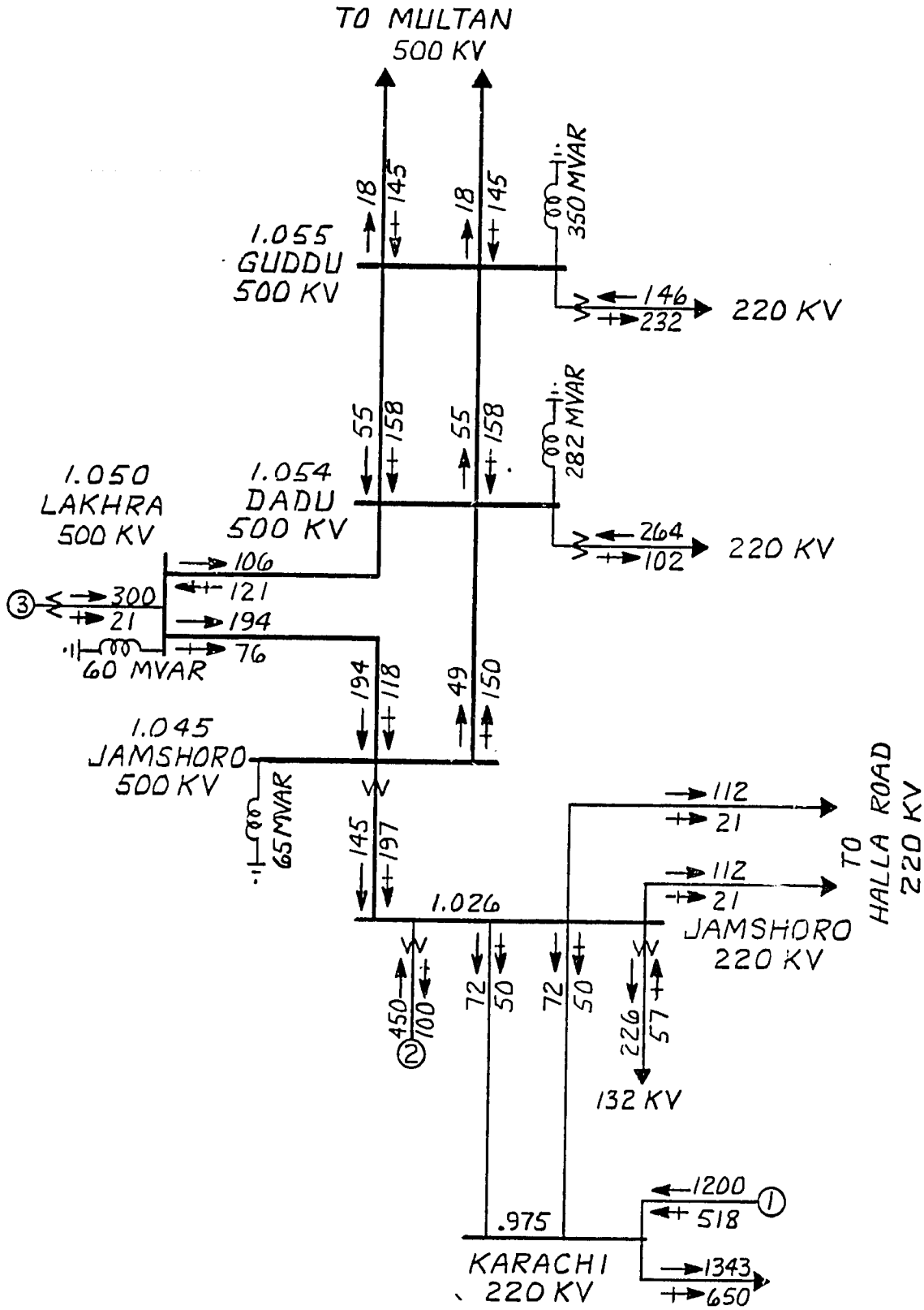


GENERATOR DETAILS

| ITEM | DESCRIPTION | MW |
|---|---|---|
| 1.0 | KARACHI EQUIV. | – |
| 2.1 | JAMSHORO OIL-1 | 250 |
| 2.2 | JAMSHORO OIL-2 | 210 |
| 3.0 | LAKHRA COAL-1 | 300 |

LAKHRA POWER FEASIBILITY STUDY

LOAD 7740 YEAR 1991 SEASON HIGH WATER

CASE 7

ALT 1 -300 MW COAL UNIT ON LAKHRA

500KV LOOP ON EXISTING JAMSHORO-DADU CKT

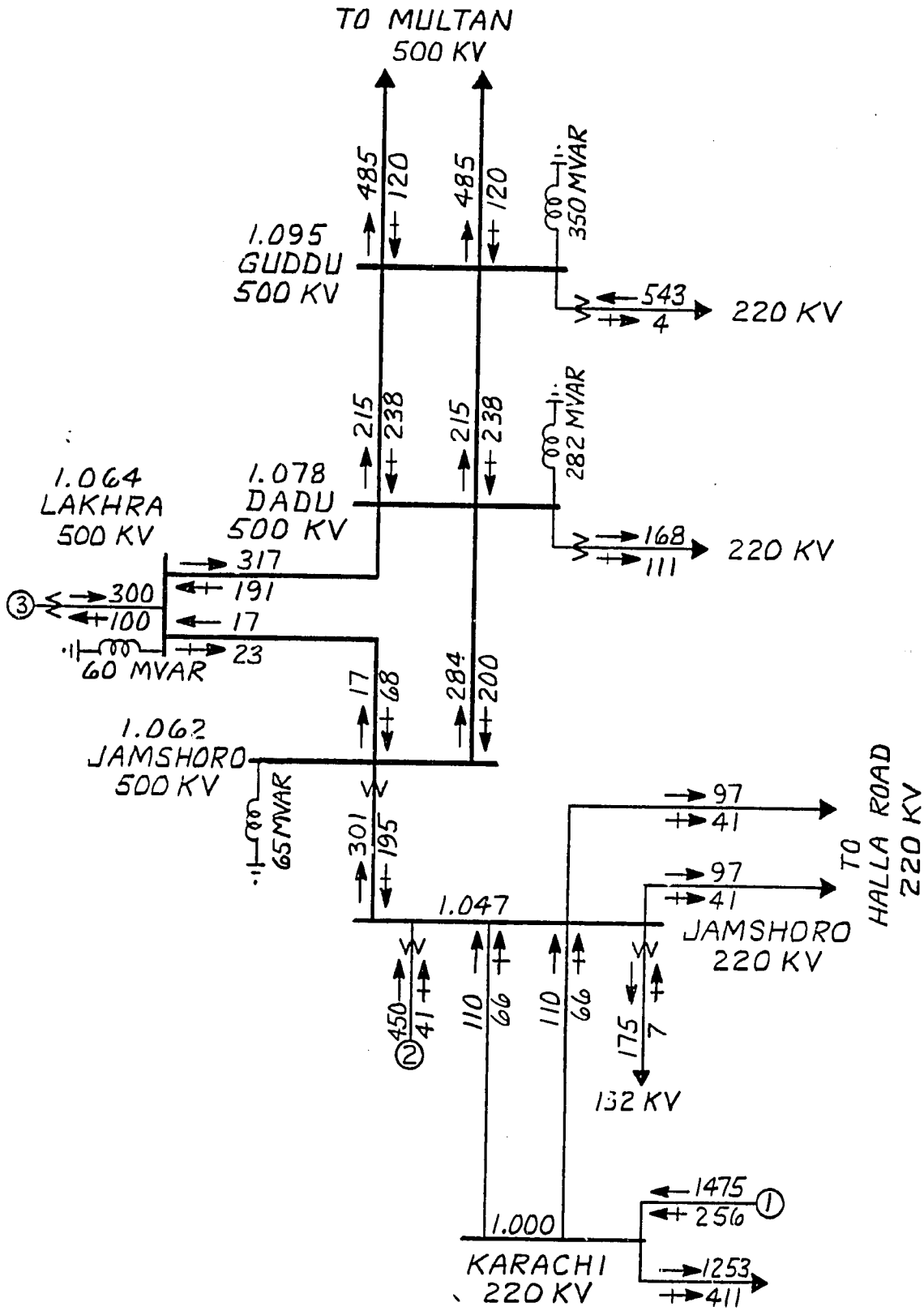


GENERATOR DETAILS

| ITEM | DESCRIPTION | MW |
|---|---|---|
| 1.0 | KARACHI EQUIV. | — |
| 2.1 | JAMSHORO OIL-1 | 250 |
| 2.2 | JAMSHORO OIL-2 | 210 |
| 3.0 | LAKHRA COAL-1 | 300 |

LAKHRA POWER FEASIBILITY STUDY

LOAD 7220 YEAR 1991 SEASON LOW WATER

CASE 8

ALT 1- 300 MW COAL UNIT ON LAKHRA

500 KV LOOP ON EXISTING JAMSHORO-DADU CKT

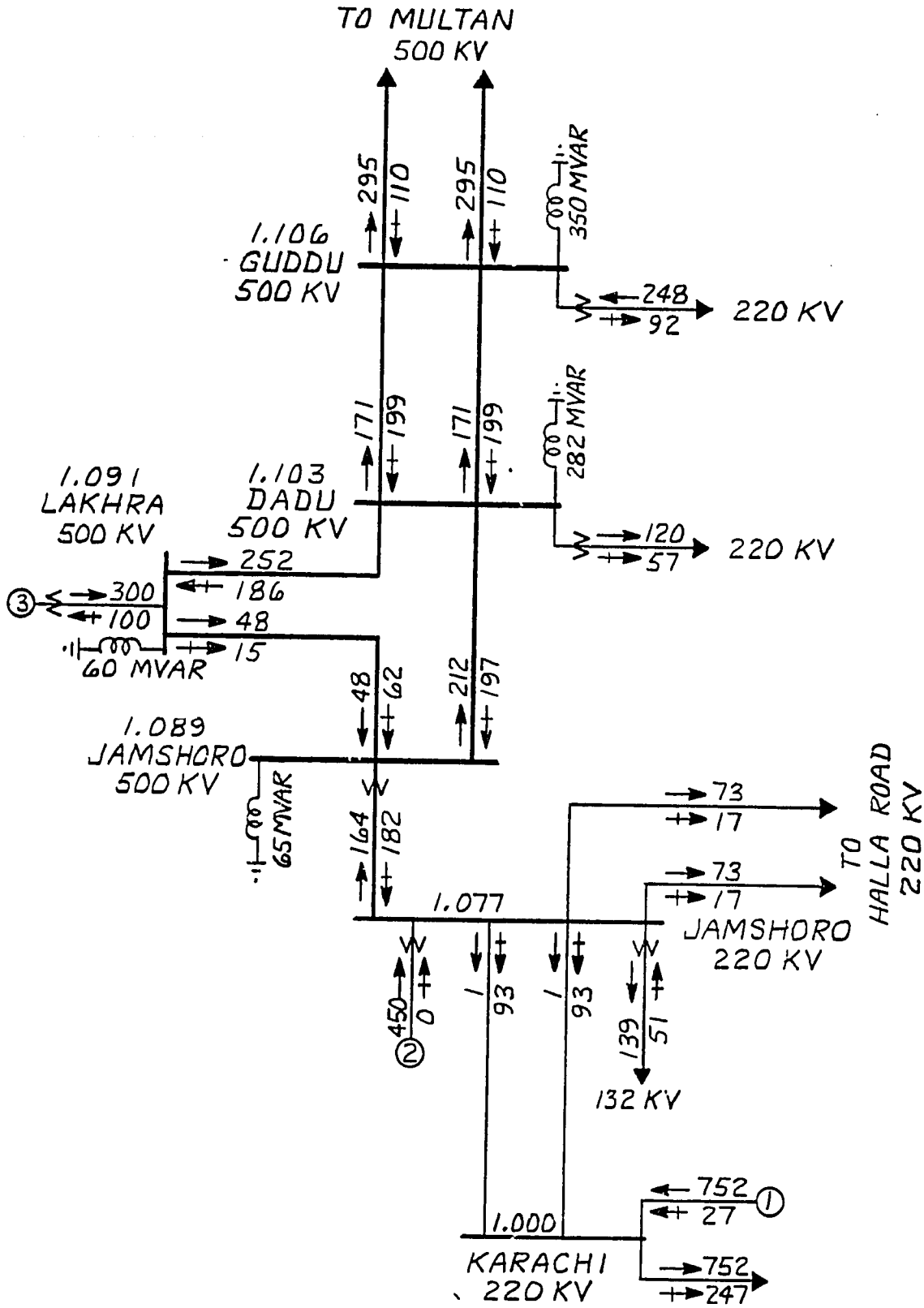


GENERATOR DETAILS

| ITEM | DESCRIPTION | MW |
|---|---|---|
| 1.0 | KARACHI EQUIV. | — |
| 2.1 | JAMSHORO OIL-1 | 250 |
| 2.2 | JAMSHORO OIL-2 | 210 |
| 3.0 | LAKHRA COAL-1 | 300 |

LAKHRA POWER FEASIBILITY STUDY

LOAD 4332 YEAR 1991 SEASON LOW WATER

CASE 9

ALT 1 - 300 MW COAL UNIT ON LAKHRA

500 KV LOOP ON EXISTING JAMSHORO-DADU CKT

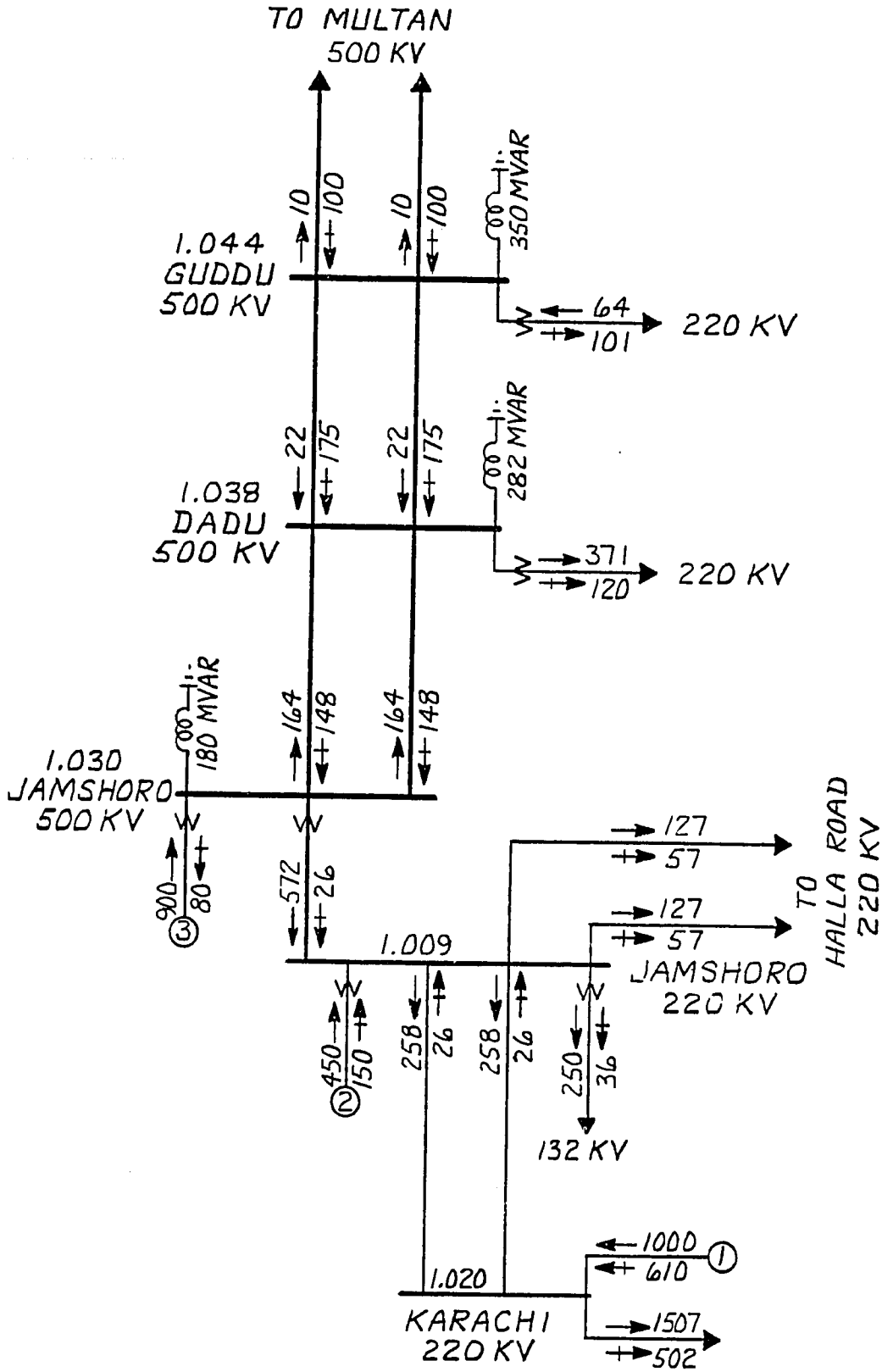


GENERATOR DETAILS

| ITEM | DESCRIPTION | MW |
|---|---|---|
| 1.0 | KARACHI EQUIV. | – |
| 2.1 | JAMSHORO OIL-1 | 250 |
| 2.2 | JAMSHORO OIL-2 | 210 |
| 3.1 | JAMSHORO COAL-1 | 300 |
| 3.2 | JAMSHORO COAL-2 | 300 |
| 3.3 | JAMSHORO COAL-3 | 300 |

LAKHRA POWER FEASIBILITY STUDY

LOAD 9112 YEAR 1993 SEASON HIGH-WTR-PK LOAD

CASE 10

ALT 1.1 - 3X300 MW COAL UNIT ON JAMSHORO 500 KV

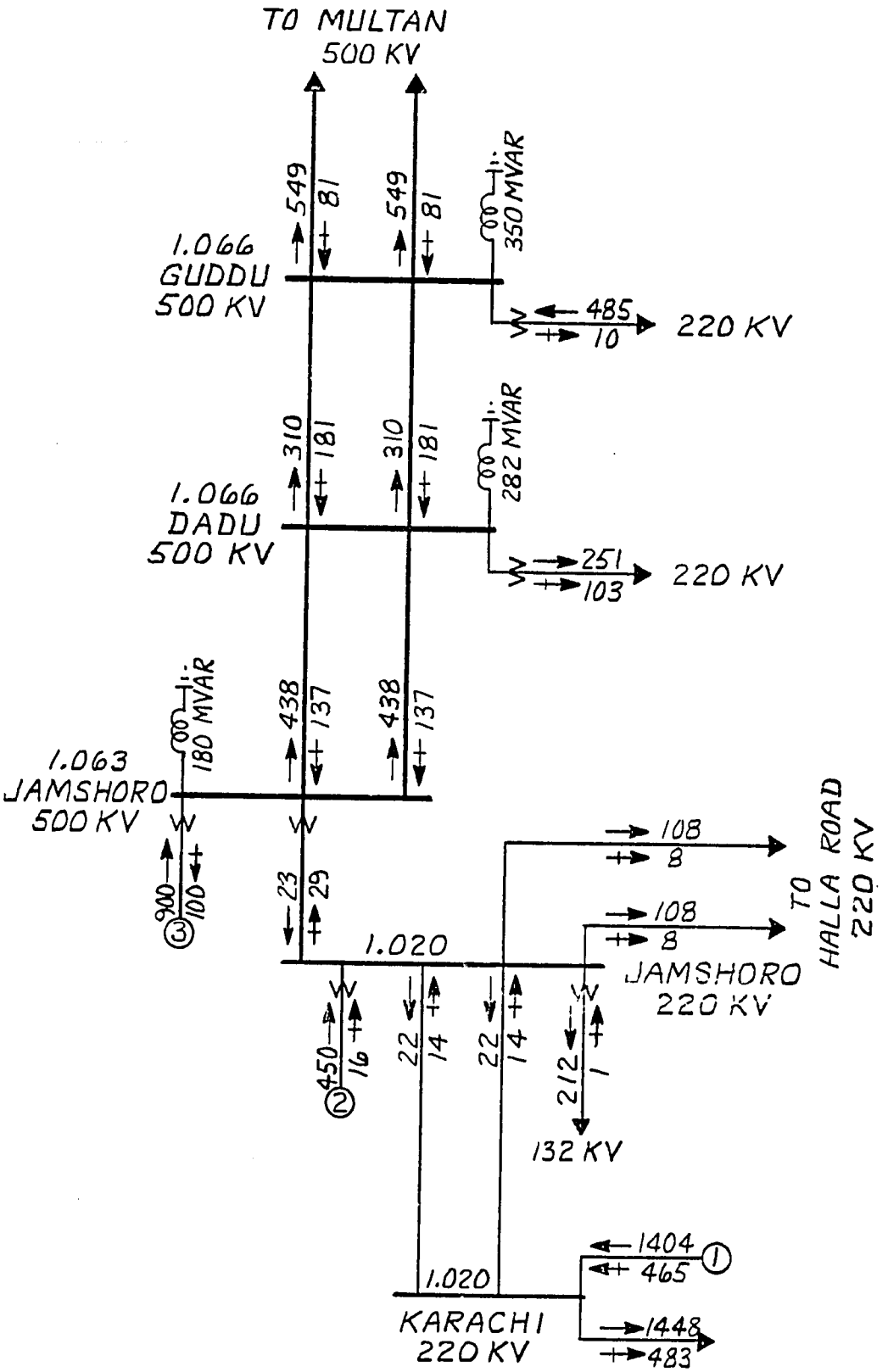


GENERATOR DETAILS

| ITEM | DESCRIPTION | MW |
|---|---|---|
| 1.0 | KARACHI EQUIV. | — |
| 2.1 | JAMSHORO OIL-1 | 250 |
| 2.2 | JAMSHORO OIL-2 | 210 |
| 3.1 | JAMSHORO COAL-1 | 300 |
| 3.2 | JAMSHORO COAL-2 | 300 |
| 3.3 | JAMSHORO COAL-3 | 300 |

LAKHRA POWER FEASIBILITY STUDY

LOAD 8430 YEAR 1993 SEASON LOW WTR-PK LOAD

CASE 11

ALT 1.1 - 3 X 300 MW COAL UNIT ON JAMSHORO 500 KV

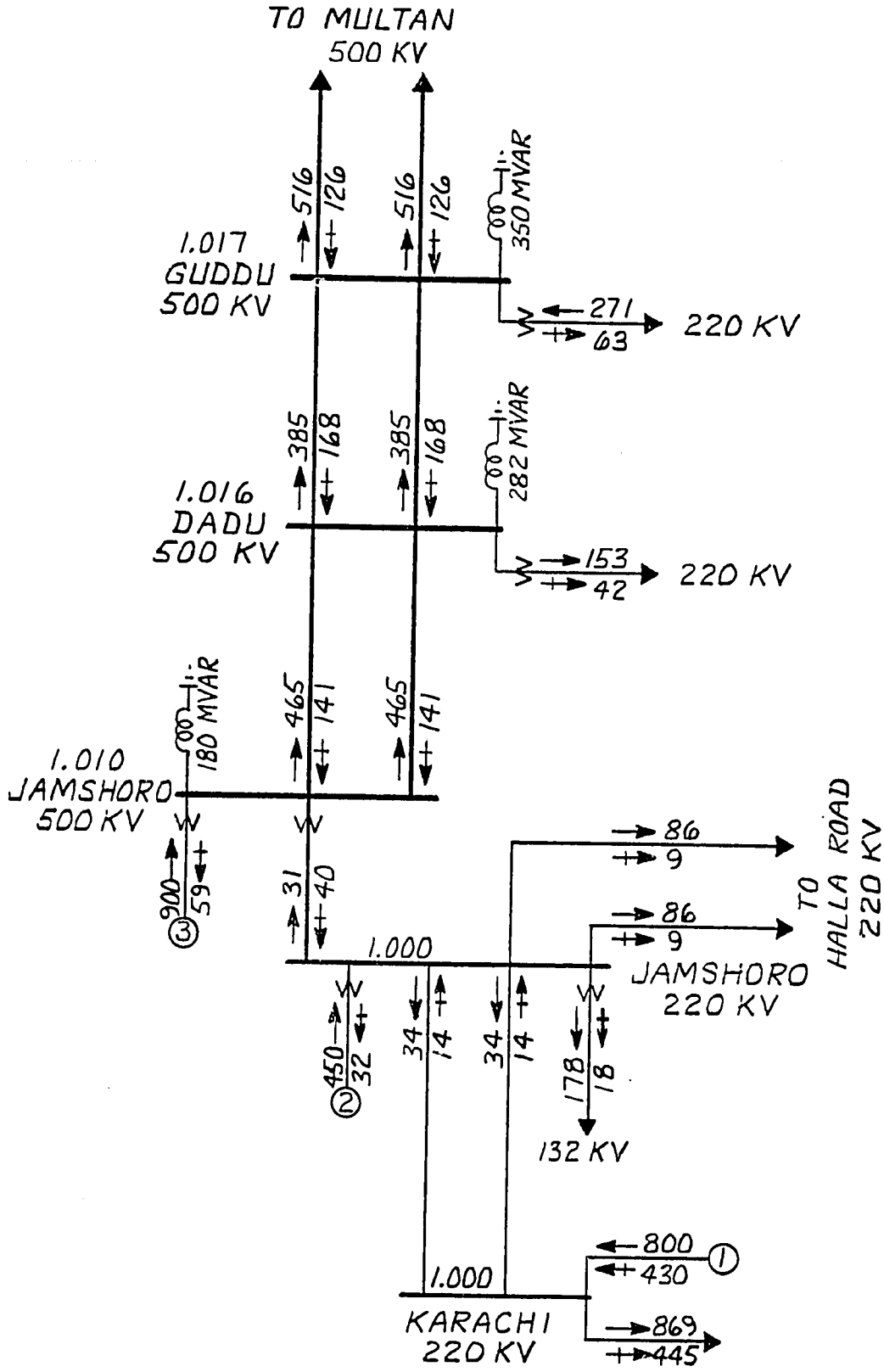


GENERATOR DETAILS

| ITEM | DESCRIPTION | MW |
|---|---|---|
| 1.0 | KARACHI EQUIV. | — |
| 2.1 | JAMSHORO OIL-1 | 250 |
| 2.2 | JAMSHORO OIL-2 | 210 |
| 3.1 | JAMSHORO COAL-1 | 300 |
| 3.2 | JAMSHORO COAL-2 | 300 |
| 3.3 | JAMSHORO COAL-3 | 300 |

LAKHRA POWER FEASIBILITY STUDY

LOAD 5058 YEAR 1993 SEASON LOW WATER

CASE 12

ALT 1.1 - 3 X 300 MW COAL UNIT ON JAMSHORO 500 KV

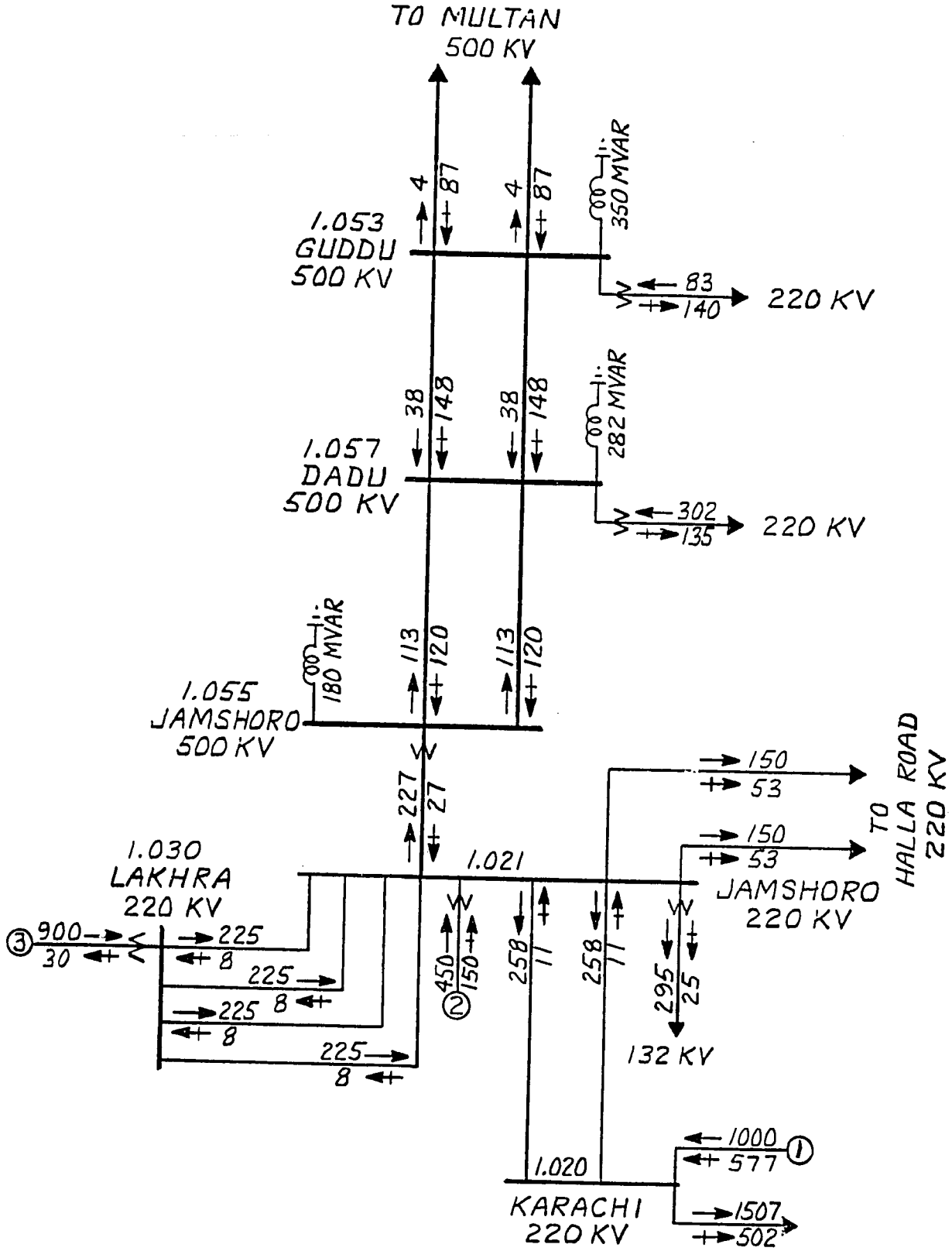


GENERATOR DETAILS

| ITEM | DESCRIPTION | MW |
|---|---|---|
| 1.0 | KARACHI EQUIV. | – |
| 2.1 | JAMSHORO OIL-1 | 250 |
| 2.2 | JAMSHORO OIL-2 | 210 |
| 3.1 | LAKHRA COAL-1 | 300 |
| 3.2 | LAKHRA COAL-2 | 300 |
| 3.3 | LAKHRA COAL-3 | 300 |

LAKHRA POWER FEASIBILITY STUDY

LOAD 9112 YEAR 1993 SEASON HIGH WATER

CASE 13

ALT 2.1 - 3X300 MW COAL UNIT AT LAKHRA

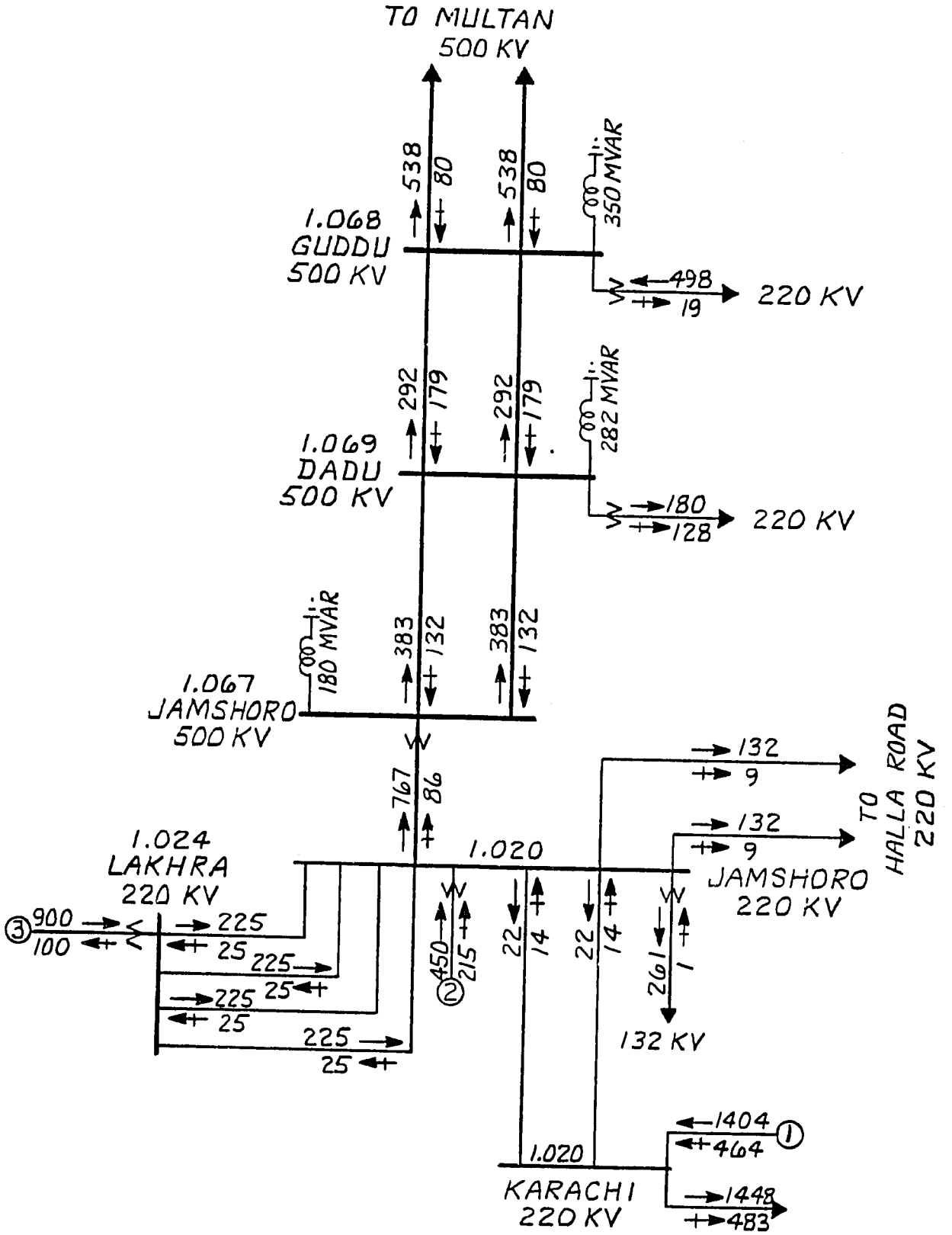


GENERATOR DETAILS

| ITEM | DESCRIPTION | MW |
|---|---|---|
| 1.0 | KARACHI EQUIV. | – |
| 2.1 | JAMSHORO OIL-1 | 250 |
| 2.2 | JAMSHORO OIL-2 | 210 |
| 3.1 | LAKHRA COAL-1 | 300 |
| 3.2 | LAKHRA COAL-2 | 300 |
| 3.3 | LAKHRA COAL-3 | 300 |

LAKHRA POWER FEASIBILITY STUDY

LOAD 8430 YEAR 1993 SEASON LOW WATER

CASE 14

ALT 2.1 - 3 X 300 MW COAL UNIT AT LAKHRA



244

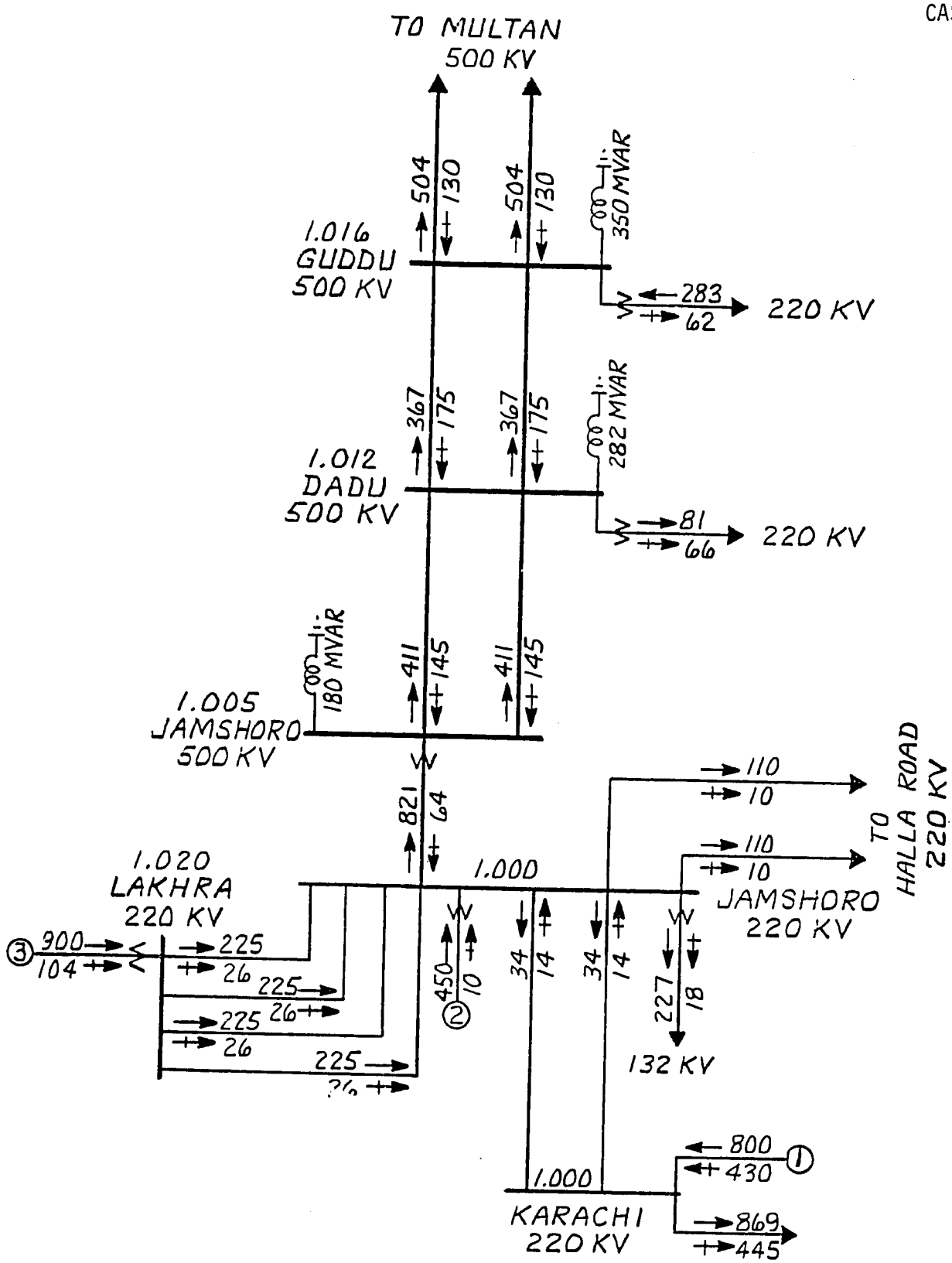


GENERATOR DETAILS

| ITEM | DESCRIPTION | MW |
|---|---|---|
| 1.0 | KARACHI EQUIV. | – |
| 2.1 | JAMSHORO OIL-1 | 250 |
| 2.2 | JAMSHORO OIL-2 | 210 |
| 3.1 | LAKHRA COAL-1 | 300 |
| 3.2 | LAKHRA COAL-2 | 300 |
| 3.3 | LAKHRA COAL-3 | 300 |

LAKHRA POWER FEASIBILITY STUDY

LOAD 5058 YEAR 1993 SEASON LOW WATER

CASE 15

ALT 2.1 - 3 X 300 MW COAL UNIT AT LAKHRA

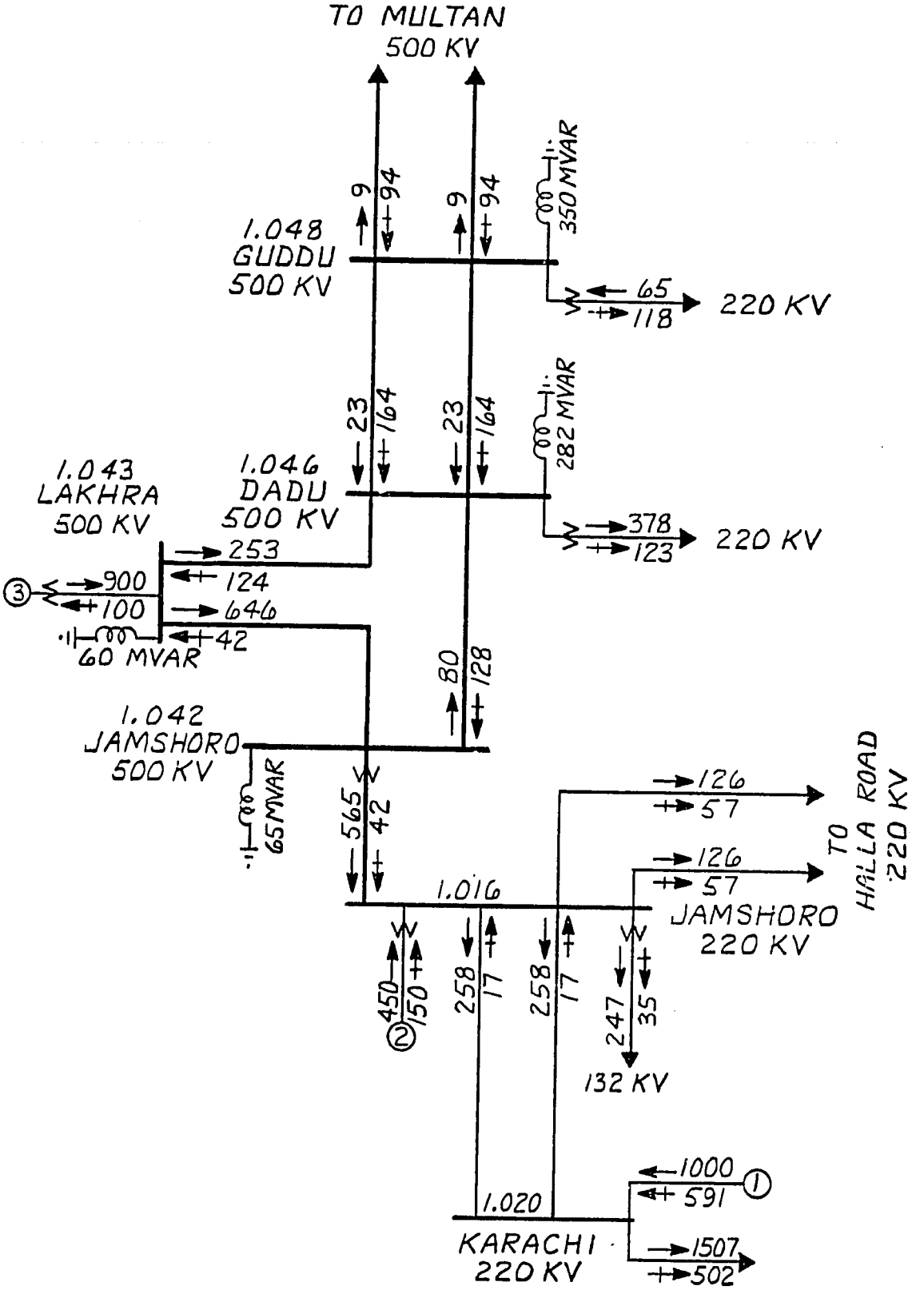


GENERATOR DETAILS

| ITEM | DESCRIPTION | MW |
|---|---|---|
| 1.0 | KARACHI EQUIV. | — |
| 2.1 | JAMSHORO OIL-1 | 250 |
| 2.2 | JAMSHORO OIL-2 | 210 |
| 3.1 | LAKHRA COAL-1 | 300 |
| 3.2 | LAKHRA COAL-2 | 300 |
| 3.3 | LAKHRA COAL-3 | 300 |

LAKHRA POWER FEASIBILITY STUDY

LOAD 9112 YEAR 1993 SEASON HIGH WTR-PK LOAD

CASE 16

ALT -3 X 300 MW COAL UNIT ON LAKHRA 500 KV

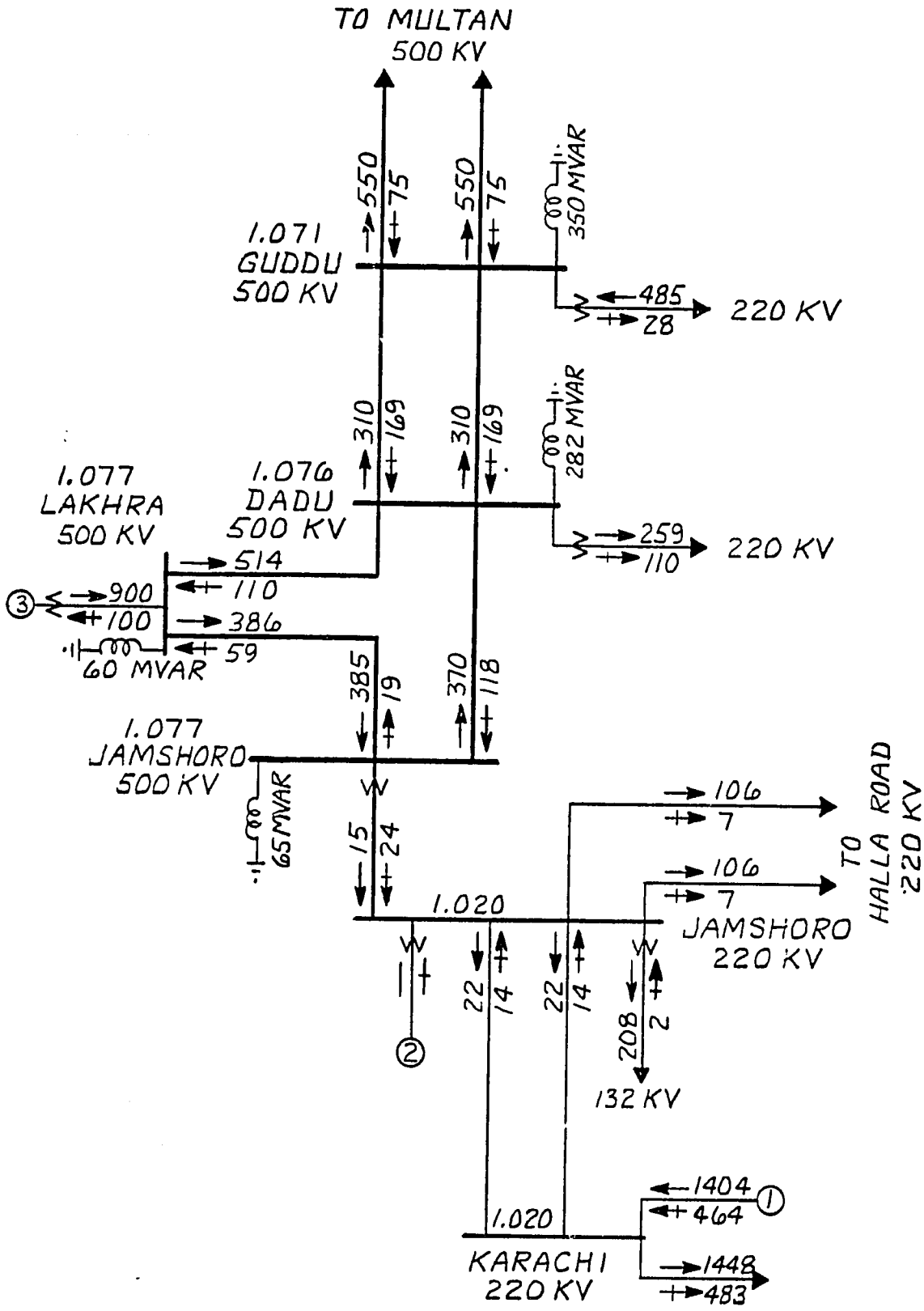


GENERATOR DETAILS

| ITEM | DESCRIPTION | MW |
|---|---|---|
| 1.0 | KARACHI EQUIV. | – |
| 2.1 | JAMSHORO OIL-1 | 250 |
| 2.2 | JAMSHORO OIL-2 | 210 |
| 3.1 | LAKHRA COAL-1 | 300 |
| 3.2 | LAKHRA COAL-2 | 300 |
| 3.3 | LAKHRA COAL-3 | 300 |

LAKHRA POWER FEASIBILITY STUDY

LOAD 8430 YEAR 1993 SEASON LOW WTR-PK LOAD

CASE 17

ALT - 3 X 300 MW COAL UNIT ON LAKHRA 500 KV

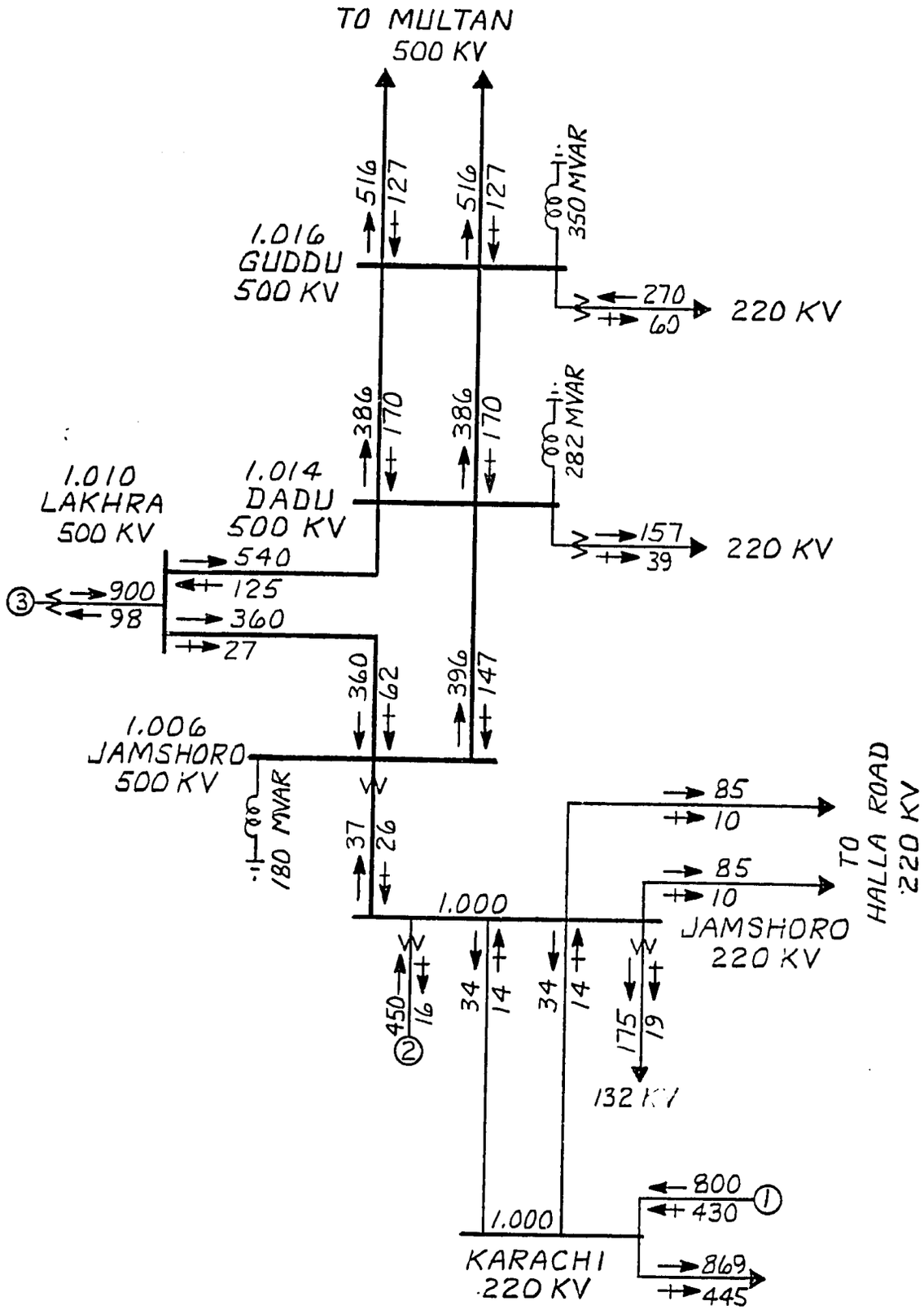


GENERATOR DETAILS

| ITEM | DESCRIPTION | MW |
|---|---|---|
| 1.0 | KARACHI EQUIV. | – |
| 2.1 | JAMSHORO OIL-1 | 250 |
| 2.2 | JAMSHORO OIL-2 | 210 |
| 3.1 | LAKHRA COAL-1 | 300 |
| 3.2 | LAKHRA COAL-2 | 300 |
| 3.3 | LAKHRA COAL-3 | 300 |

LAKHRA POWER FEASIBILITY STUDY

LOAD 5058 YEAR 1993 SEASON LOW WATER

CASE 18

ALT - 3 X 300 MW COAL UNIT ON LAKHRA 500 KV

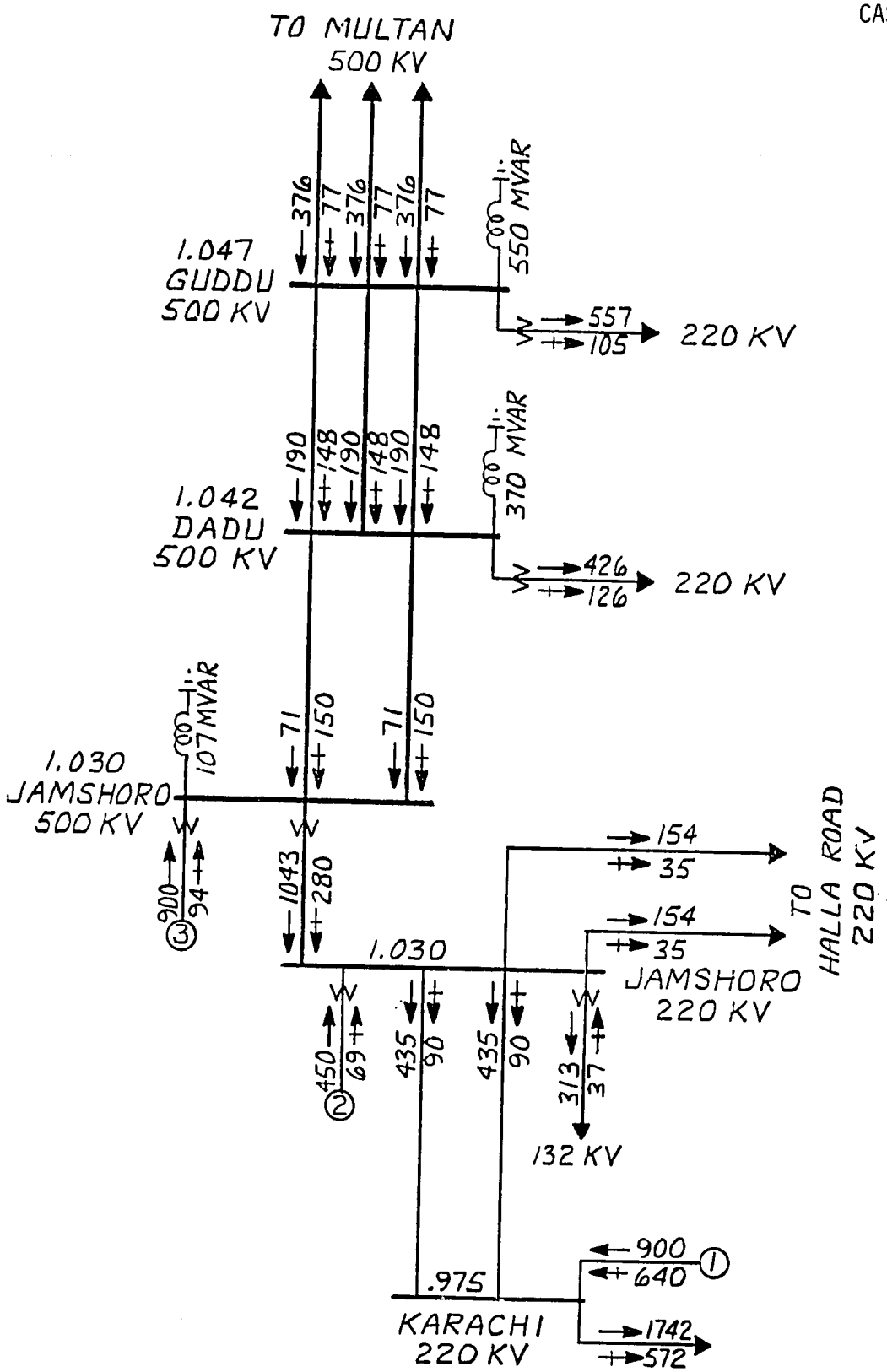


GENERATOR DETAILS

| ITEM | DESCRIPTION | MW |
|---|---|---|
| 1.0 | KARACHI EQUIV. | – |
| 2.1 | JAMSHORO OIL-1 | 250 |
| 2.2 | JAMSHORO OIL-2 | 210 |
| 3.1 | JAMSHORO COAL-1 | 300 |
| 3.2 | JAMSHORO COAL-2 | 300 |
| 3.3 | JAMSHORO COAL-3 | 300 |

LAKHRA POWER FEASIBILITY STUDY

LOAD 10,678 YEAR 1995 SEASON HIGH WATER

CASE 19

ALT 1.1 - 3 X 300 MW COAL UNIT ON JAMSHORO 500 KV

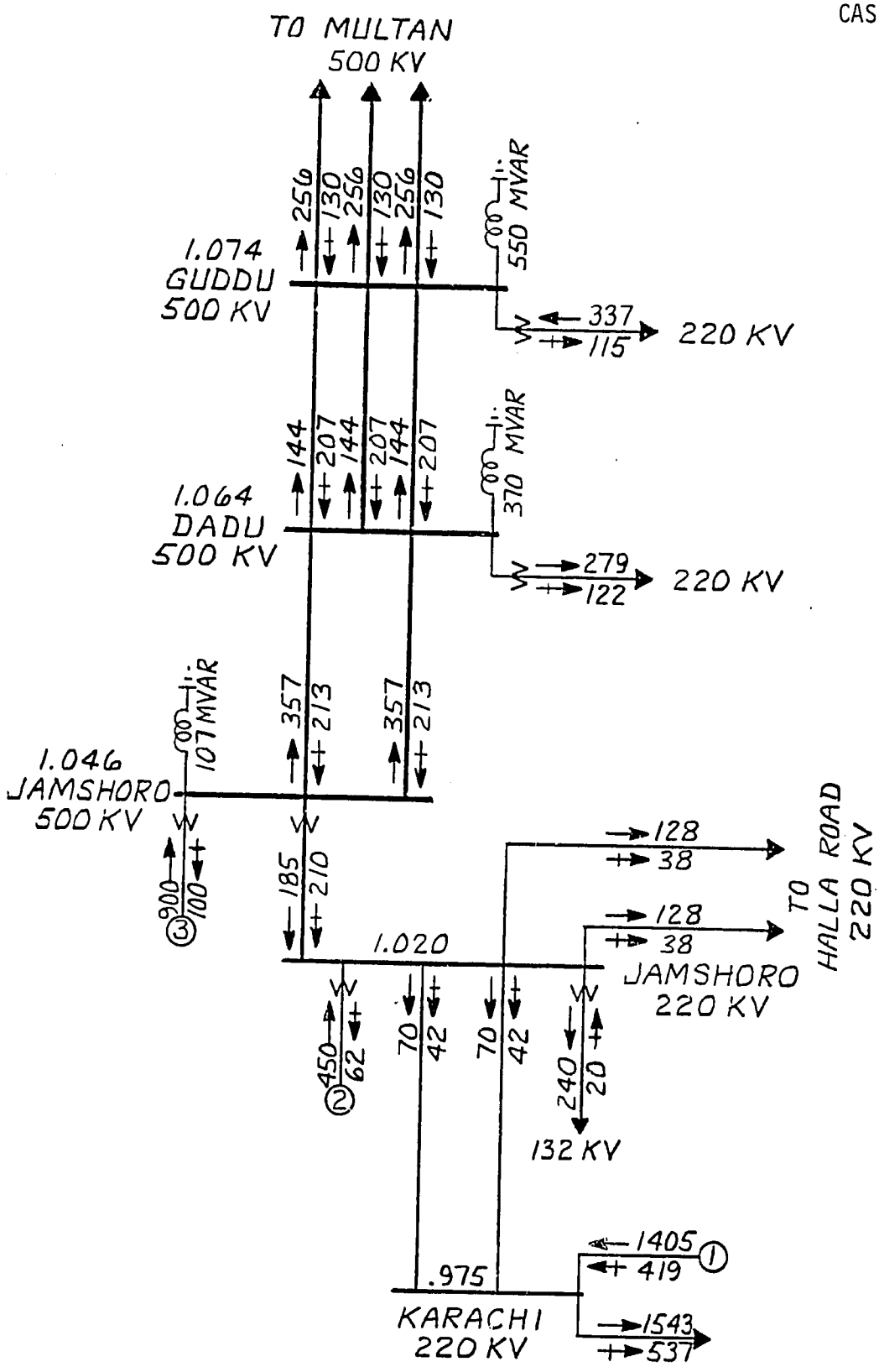


GENERATOR DETAILS

| ITEM | DESCRIPTION | MW |
|---|---|---|
| 1.0 | KARACHI EQUIV. | – |
| 2.1 | JAMSHORO OIL-1 | 250 |
| 2.2 | JAMSHORO OIL-2 | 210 |
| 3.1 | JAMSHORO COAL-1 | 300 |
| 3.2 | JAMSHORO COAL-2 | 300 |
| 3.3 | JAMSHORO COAL-3 | 300 |

LAKHRA POWER FEASIBILITY STUDY

LOAD 9704 YEAR 1995 SEASON LOW WATER

CASE 20

ALT 1.1 - 3 X 300 MW COAL UNIT ON JAMSHORO 500 KV

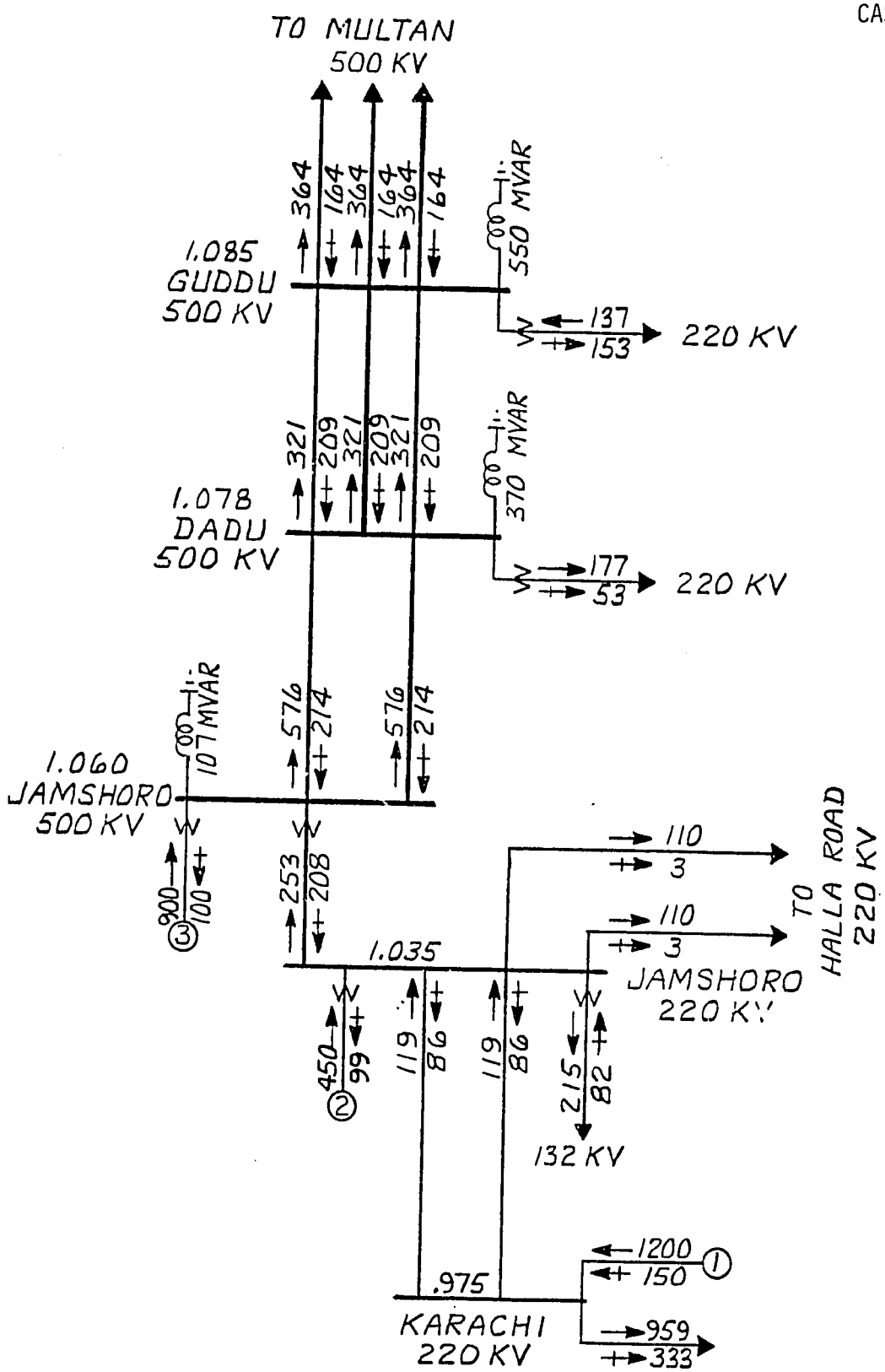


GENERATOR DETAILS

| ITEM | DESCRIPTION | MW |
|---|---|---|
| 1.0 | KARACHI EQUIV. | – |
| 2.1 | JAMSHORO OIL-1 | 250 |
| 2.2 | JAMSHORO OIL-2 | 210 |
| 3.1 | JAMSHORO COAL-1 | 300 |
| 3.2 | JAMSHORO COAL-2 | 300 |
| 3.3 | JAMSHORO COAL-3 | 300 |

LAKHRA POWER FEASIBILITY STUDY

LOAD 6029 YEAR 1995 SEASON LOW WATER

CASE 21

ALT 1.1 - 3 X 300 MW COAL UNIT ON JAMSHORO 500 KV

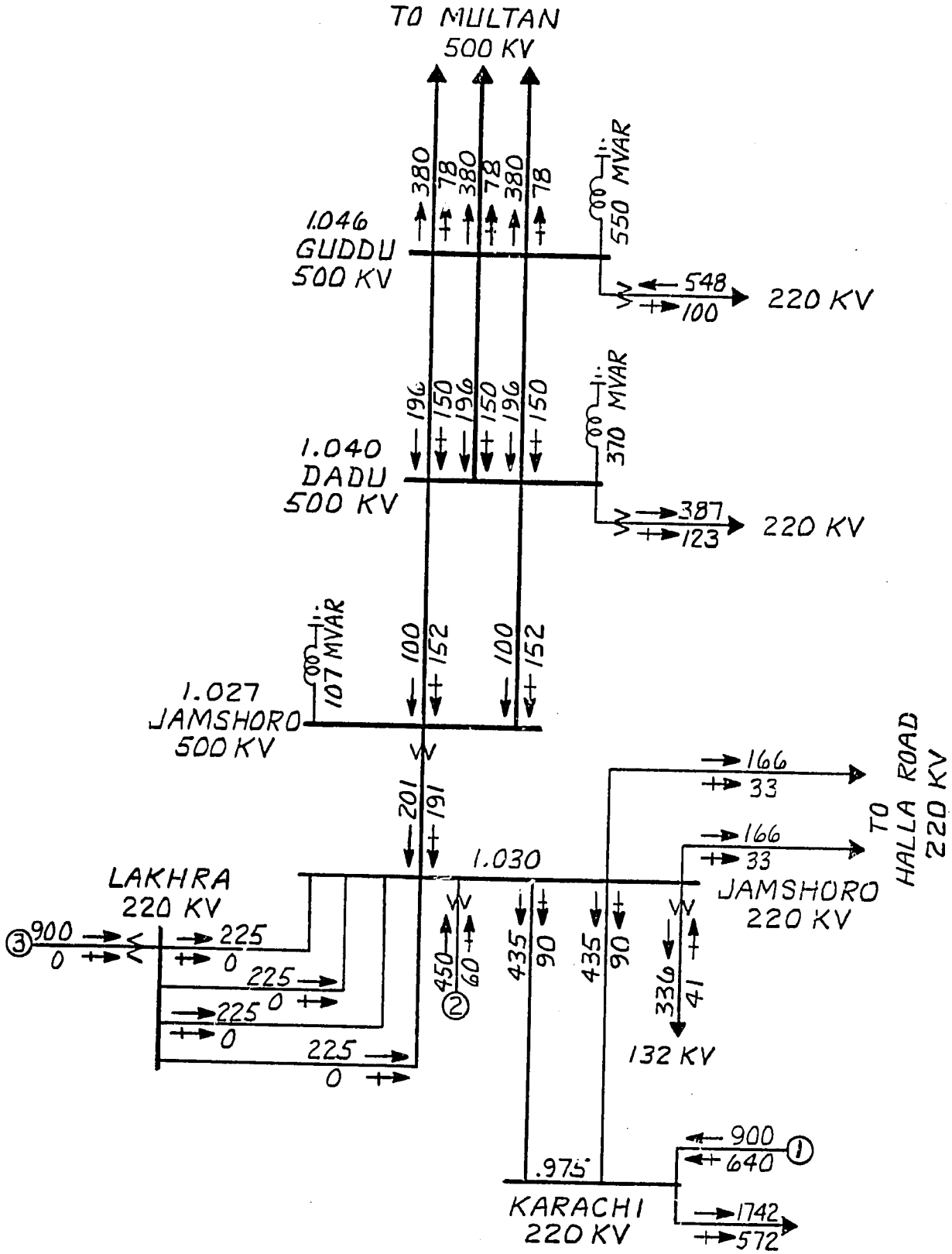


GENERATOR DETAILS

| ITEM | DESCRIPTION | MW |
|---|---|---|
| 1.0 | KARACHI EQUIV. | — |
| 2.1 | JAMSHORO OIL-1 | 250 |
| 2.2 | JAMSHORO OIL-2 | 210 |
| 3.1 | LAKHRA COAL-1 | 300 |
| 3.2 | LAKHRA COAL-2 | 300 |
| 3.3 | LAKHRA COAL-3 | 300 |

LAKHRA POWER FEASIBILITY STUDY

LOAD 10,678 YEAR 1995 SEASON HIGH WATER

CASE 22

ALT 2.1- 3X300 MW COAL UNIT AT LAKHRA

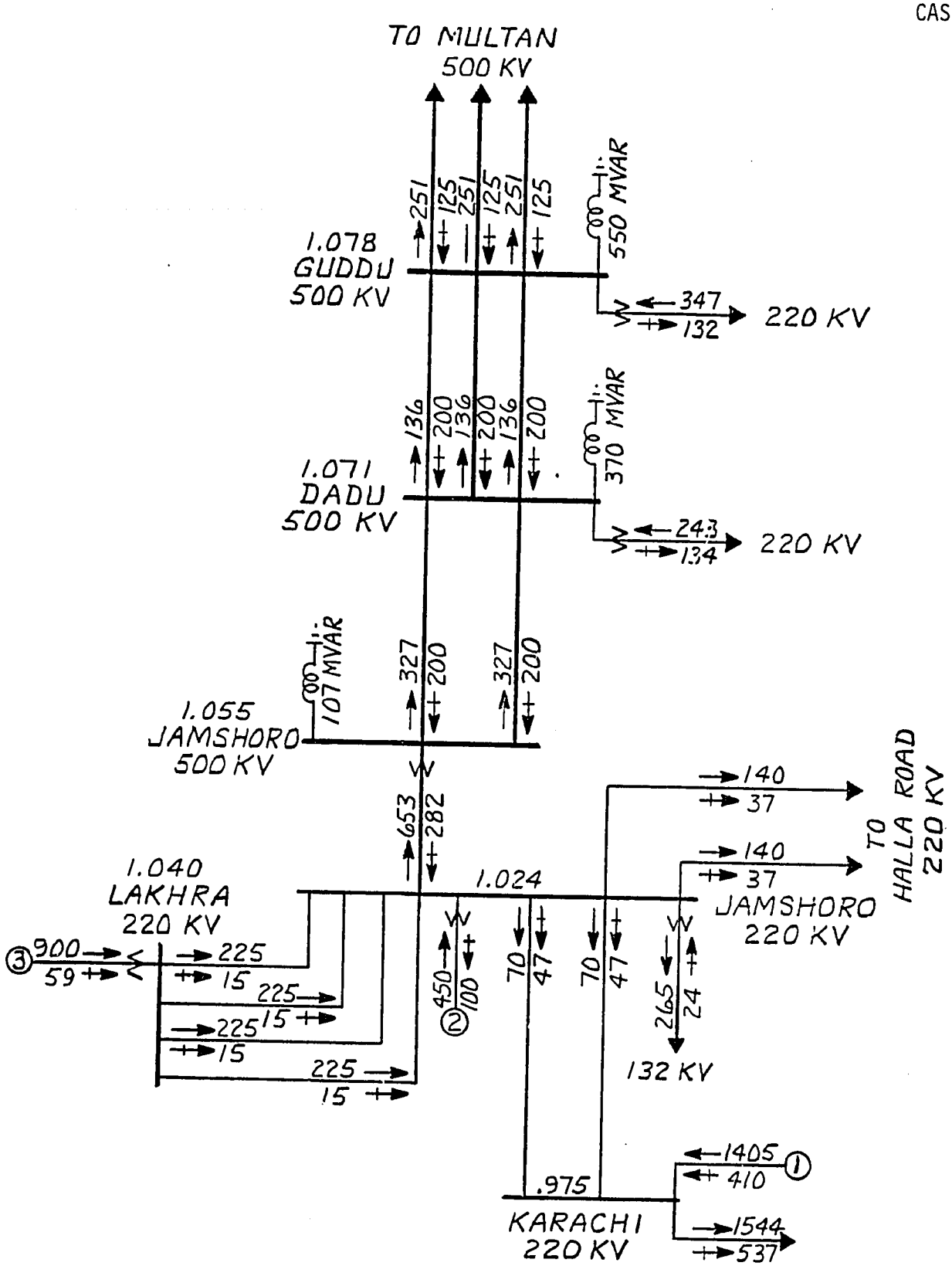


GENERATOR DETAILS

| ITEM | DESCRIPTION | MW |
|---|---|---|
| 1.0 | KARACHI EQUIV. | – |
| 2.1 | JAMSHORO OIL-1 | 250 |
| 2.2 | JAMSHORO OIL-2 | 210 |
| 3.1 | LAKHRA COAL-1 | 300 |
| 3.2 | LAKHRA COAL-2 | 300 |
| 3.3 | LAKHRA COAL-3 | 300 |

LAKHRA POWER FEASIBILITY STUDY

LOAD 9704 YEAR 1995 SEASON LOW WATER

CASE 23

ALT 2.1 - 3 X 300 MW COAL UNIT AT LAKHRA

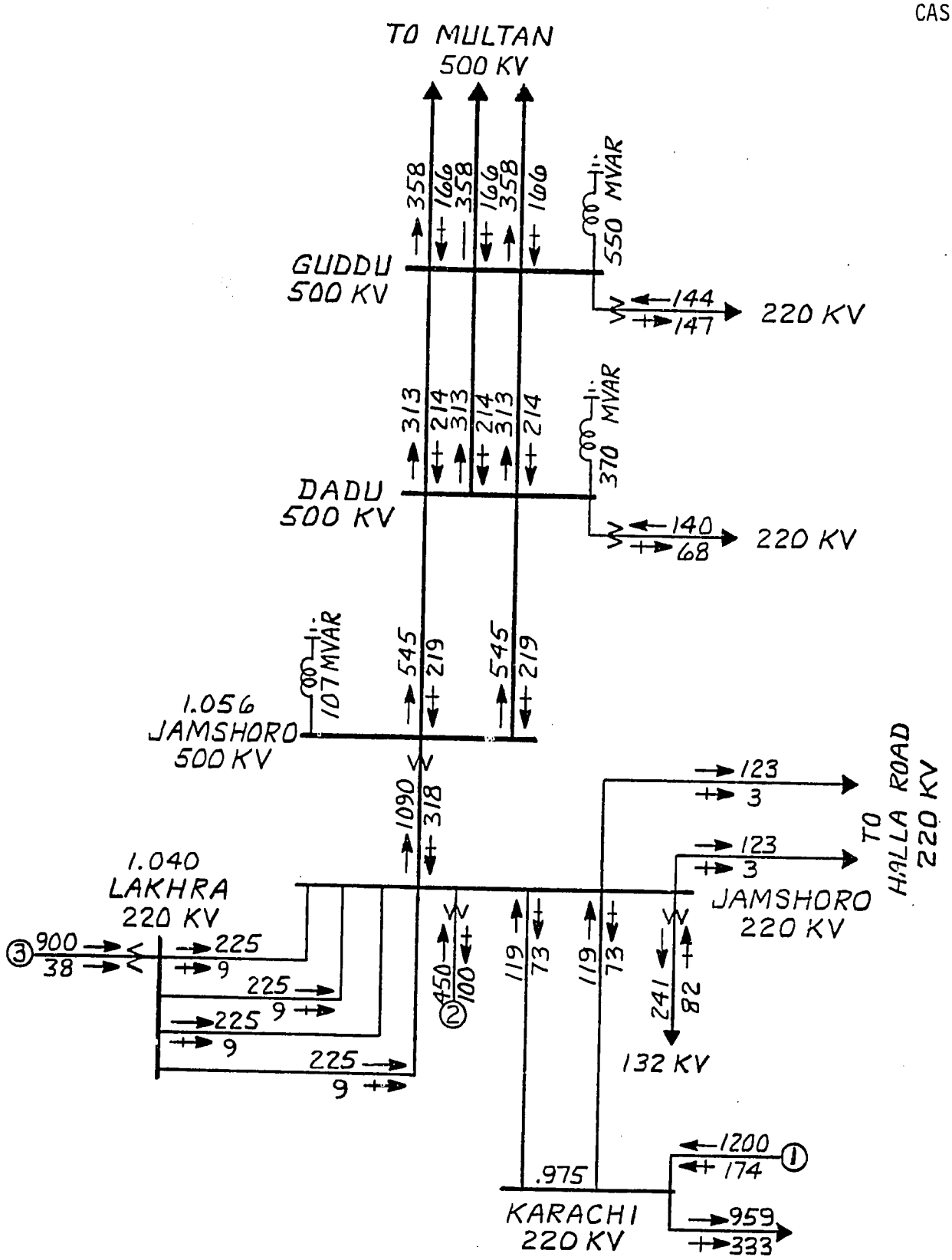


GENERATOR DETAILS

| ITEM | DESCRIPTION | MW |
|---|---|---|
| 1.0 | KARACHI EQUIV. | – |
| 2.1 | JAMSHORO OIL-1 | 250 |
| 2.2 | JAMSHORO OIL-2 | 210 |
| 3.1 | LAKHRA COAL-1 | 300 |
| 3.2 | LAKHRA COAL-2 | 300 |
| 3.3 | LAKHRA COAL-3 | 300 |

LAKHRA POWER FEASIBILITY STUDY

LOAD 6029 YEAR 1995 SEASON LOW WATER

CASE 24

ALT 2.1 - 3 X 300 MW COAL UNIT AT LAKHRA

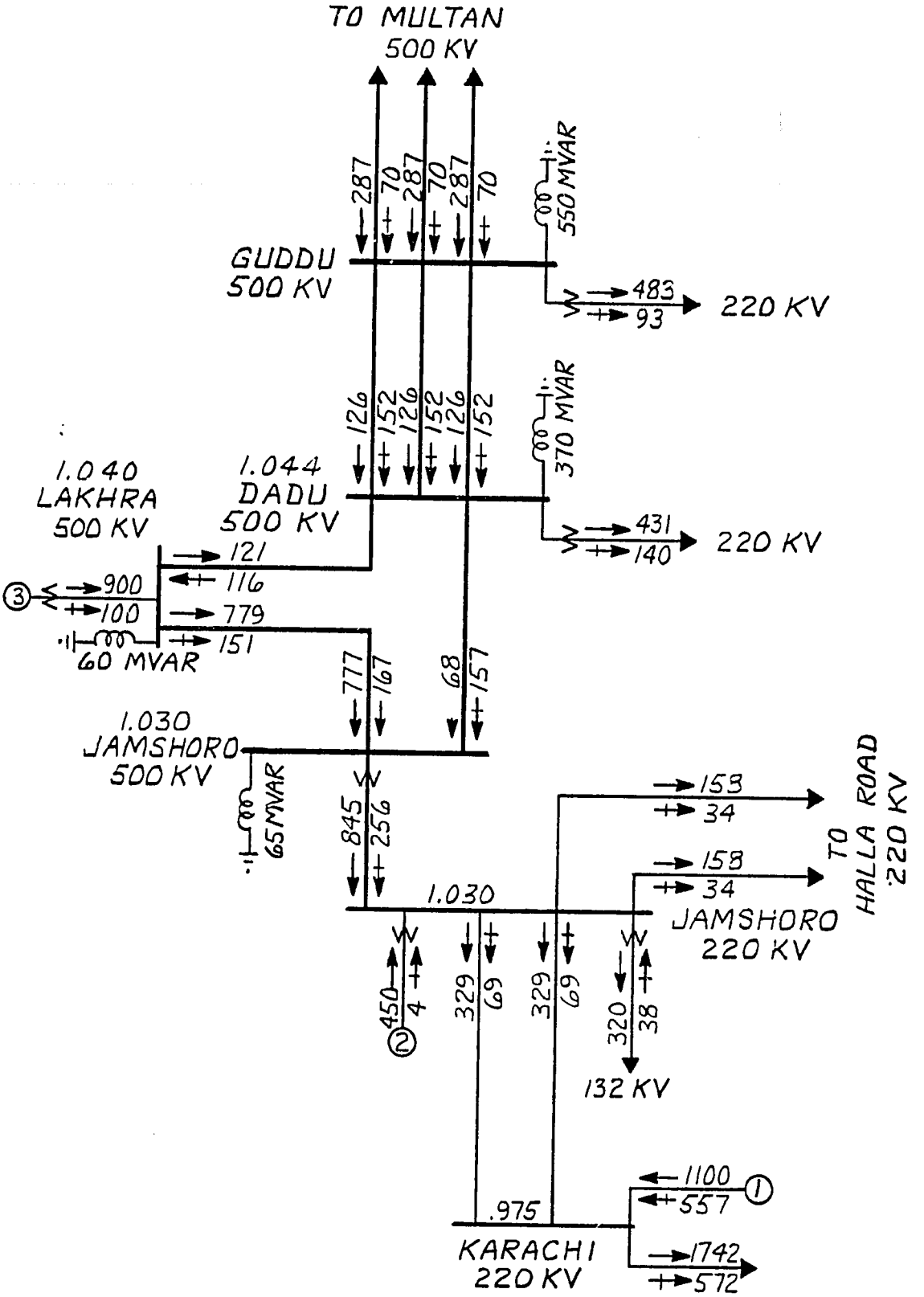


GENERATOR DETAILS

| ITEM | DESCRIPTION | MW |
|---|---|---|
| 1.0 | KARACHI EQUIV. | — |
| 2.1 | JAMSHORO OIL-1 | 250 |
| 2.2 | JAMSHORO OIL-2 | 210 |
| 3.1 | LAKHRA COAL-1 | 300 |
| 3.2 | LAKHRA COAL-2 | 300 |
| 3.3 | LAKHRA COAL-3 | 300 |

LAKHRA POWER FEASIBILITY STUDY

LOAD 10678 YEAR 1995 SEASON HIGH WATER

CASE 25

ALT -3 X 300 MW COAL UNIT ON

LAKHRA 500 KV

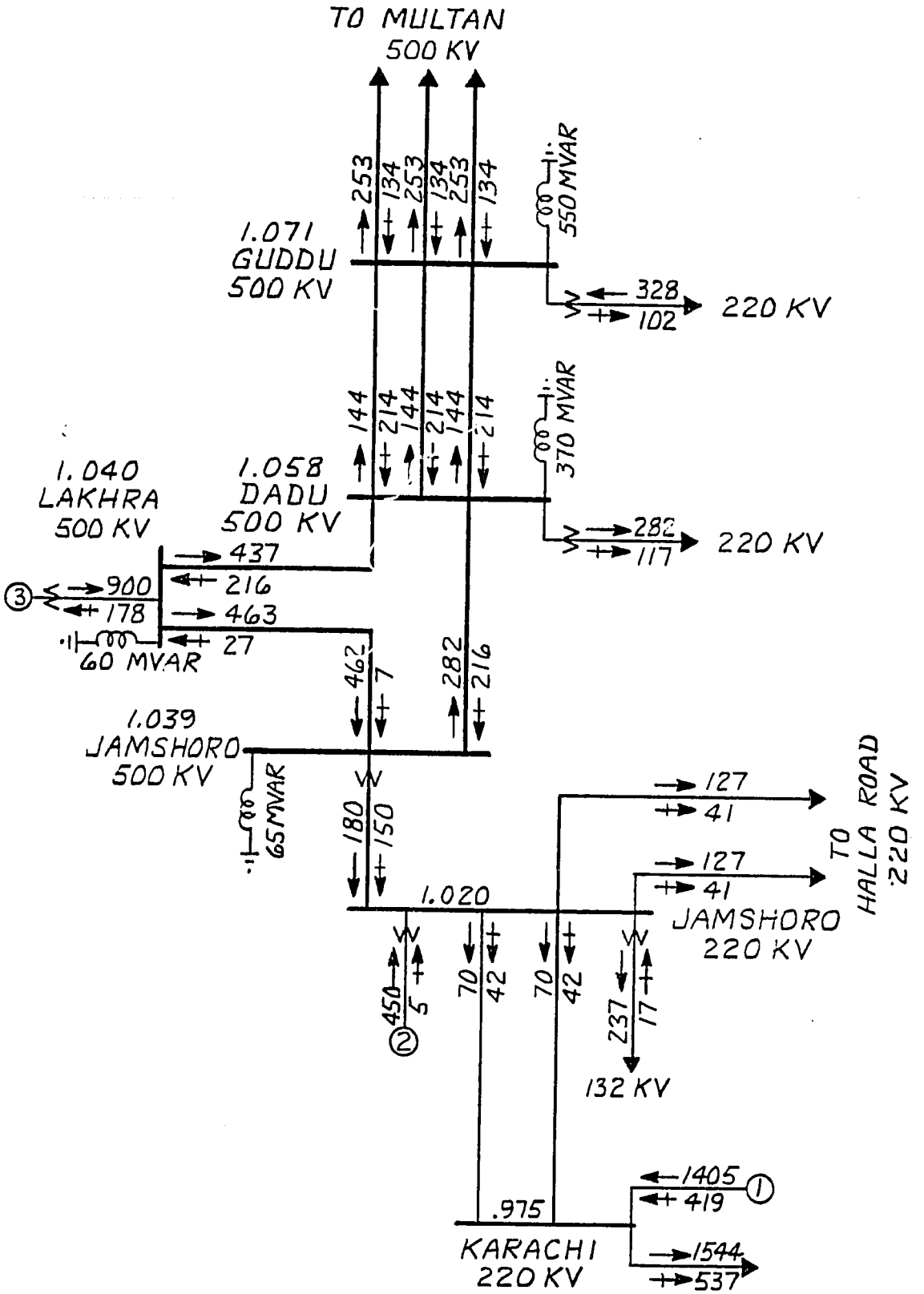


GENERATOR DETAILS

| ITEM | DESCRIPTION | MW |
|---|---|---|
| 1.0 | KARACHI EQUIV. | — |
| 2.1 | JAMSHORO OIL-1 | 250 |
| 2.2 | JAMSHORO OIL-2 | 210 |
| 3.1 | LAKHRA COAL-1 | 300 |
| 3.2 | LAKHRA COAL-2 | 300 |
| 3.3 | LAKHRA COAL-3 | 300 |

LAKHRA POWER FEASIBILITY STUDY

LOAD 9704 YEAR 1995 SEASON LOW WATER

CASE 26

ALT - 3 X 300 MW COAL UNIT ON LAKHRA 500 KV

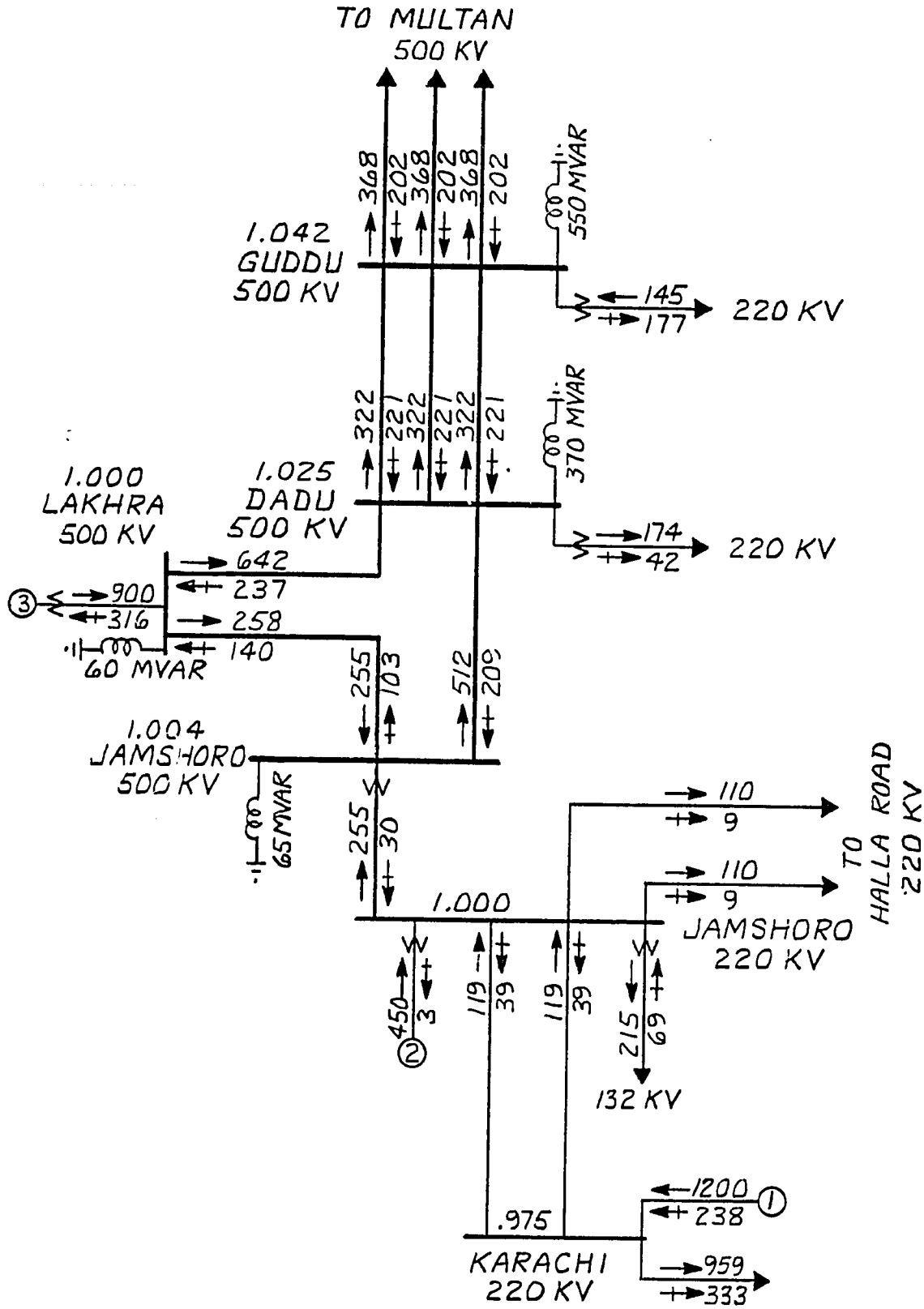


GENERATOR DETAILS

| ITEM | DESCRIPTION | MW |
|---|---|---|
| 1.0 | KARACHI EQUIV. | — |
| 2.1 | JAMSHORO OIL-1 | 250 |
| 2.2 | JAMSHORO OIL-2 | 210 |
| 3.1 | LAKHRA COAL-1 | 300 |
| 3.2 | LAKHRA COAL-2 | 300 |
| 3.3 | LAKHRA COAL-3 | 300 |

LAKHRA POWER FEASIBILITY STUDY

LOAD 6029 YEAR 1995 SEASON LOW WATER

CASE 27

ALT - 3 X 300 MW COAL UNIT ON

LAKHRA 500 KV

TRANSIENT STABILITY SUMMARY

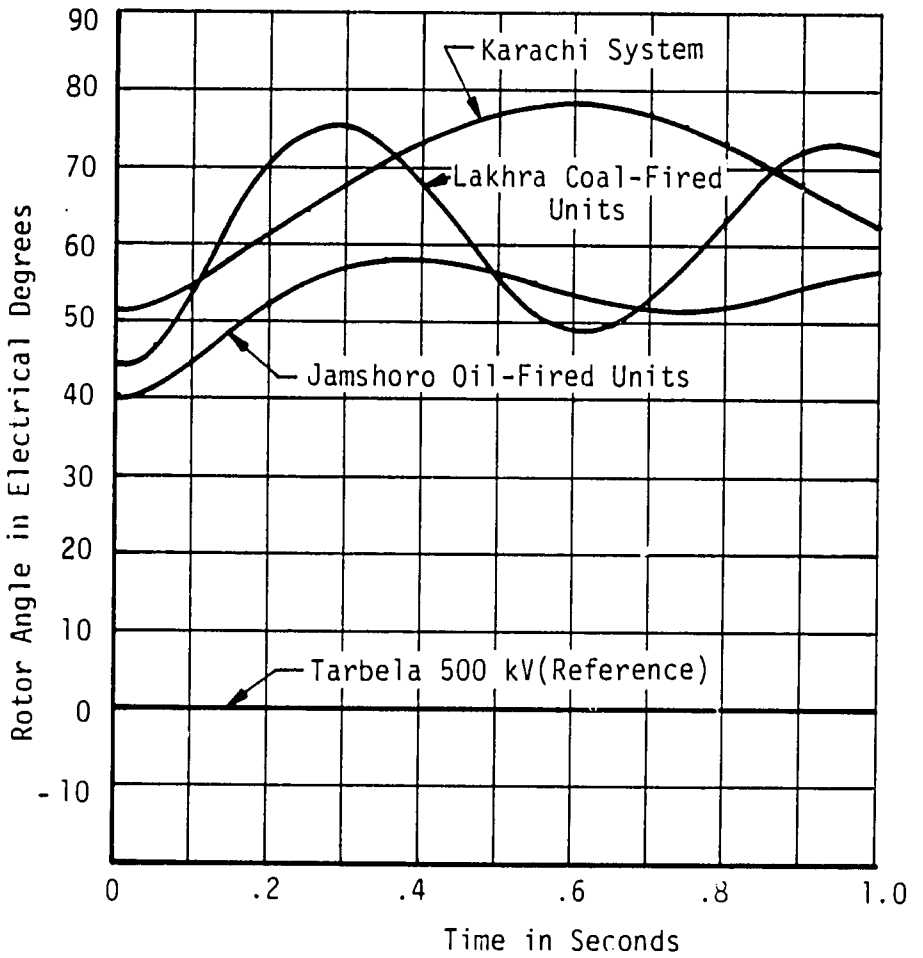


System Conditions

1. 1991 High water month peak load
2. One 300 MW coal-fired unit at Lakhra site connected to Jamshoro via 2-220 kV circuits.

Disturbance

A three phase fault is simulated on one Lakhra-Jamshoro 220 kV circuit near Lakhra at time 0. The faulted circuit is opened and the fault cleared at time .1 second (5 cycles).

Results

The system is stable.

TRANSIENT STABILITY SUMMARY

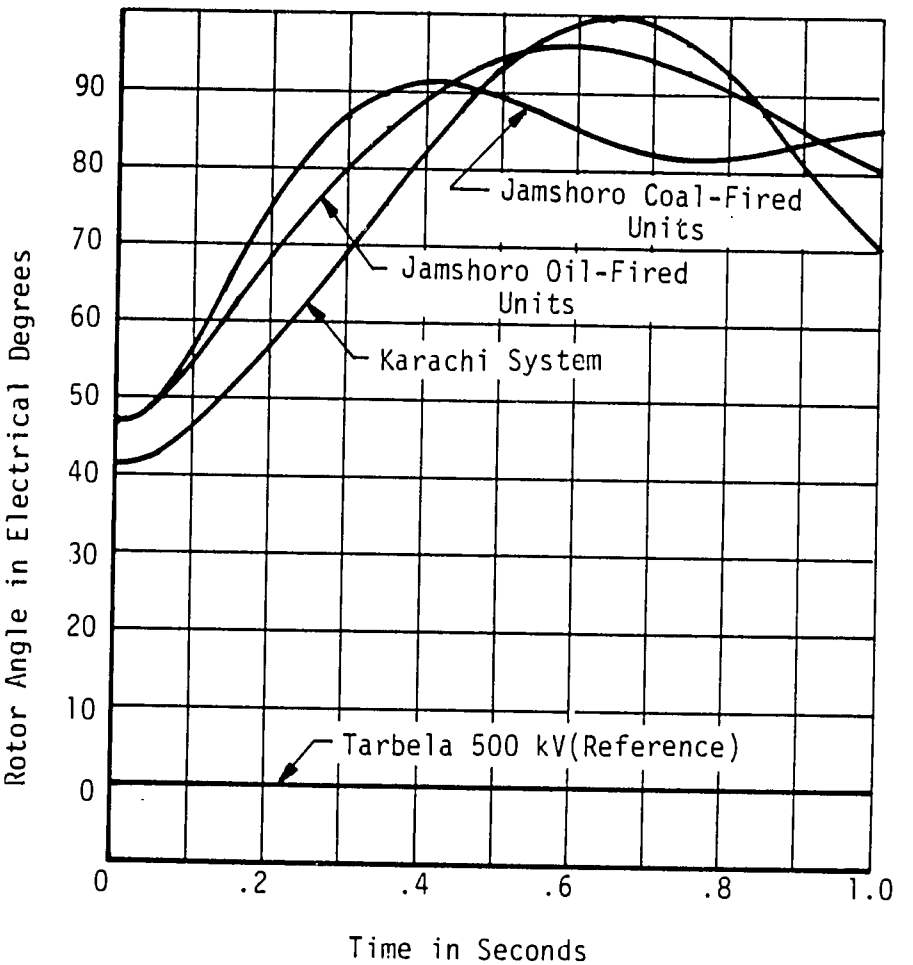


System Conditions

1. 1993 Low water month off peak load.

2. Three 300 MW Coal-fired units on Jamshoro 500 kV bus.

Disturbance

A three phase fault is simulated on one Dadu-Jamshoro 500 kV circuit near Jamshoro at time 0. The faulted circuit is opened and the fault cleared at time .1 second (5 cycles).

Results

The system is stable.

TRANSIENT STABILITY SUMMARY

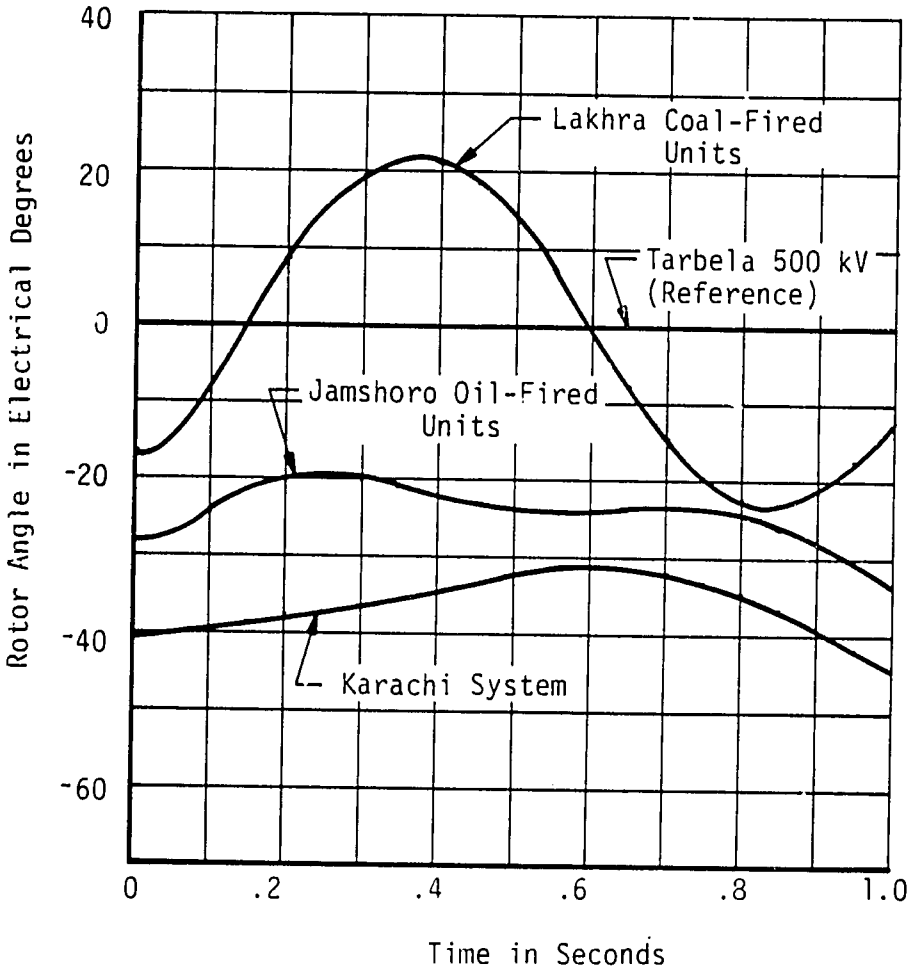


System Conditions

1. 1993 Low water peak load.

2. Three 300MW coal-fired units at Lakhra connected via looping the 500 kV Dadu-Jamshoro circuit through Lakhra.

Disturbance

A three phase fault is simulated on the Lakhra-Jamshoro 500 kV circuit near Lakhra at time 0. The faulted circuit is opened and the fault cleared at time .1 second (5 cycles).

Results

The system is stable.

## LOAD FLOW CASE INDEX FOR IMPORTED COAL

| Case No. | Year | Season | Plant Size-MW | Transmission | Description |
|---|---|---|---|---|---|
| A1 | 1991 | High Wtr | 1 x 300 | Plan 1 | 600 MW to KESC |
| A2 | 1991 | Low Wtr | 1 x 300 | Plan 1 | 300 MW from KESC |
| A3 | 1991 | Low Wtr | 1 x 300 | Plan 1 | Case A2 w/Line Outage |
| B1 | 1991 | High Wtr | 1 x 600 | Plan 2 | 600 MW to KESC |
| B2 | 1991 | Low Wtr | 1 x 600 | Plan 2 | 300 MW from KESC |
| B3 | 1991 | Low Wtr | 1 x 600 | Plan 2 | Case B2 w/Line Outage |
| B4 | 1991 | Low Wtr | 1 x 600 | Plan 2A | 300 MW from KESC |
| C1 | 1993 | Low Wtr | 2 x 600 | Plan 3 | 300 MW from KESC |
| C2 | 1993 | Low Wtr | 2 x 600 | Plan 3 | Case C1 w/Line Outage |
| C3 | 1993 | Low Wtr | 2 x 600 | Plan 3 | Case C1 w/Line Outage |
| C4 | 1993 | Low Wtr | 2 x 600 | Plan 4 | 300 MW from KESC |

CASE A1

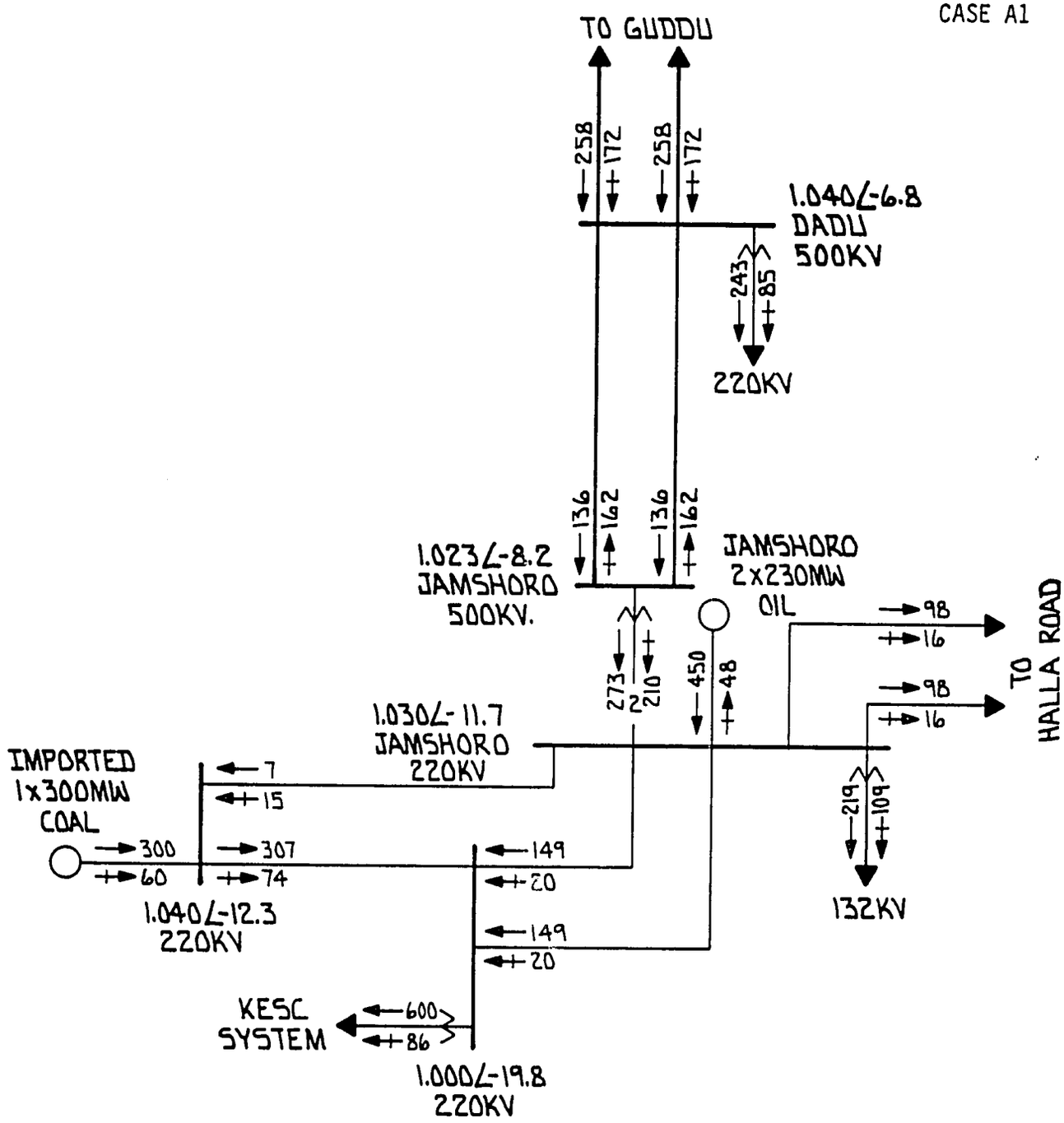


LAKHRA POWER FEASIBILITY STUDY

LOAD PK YEAR 1991 SEASON HIGH WATER

CASE A1 PLAN 1

1-300MW IMPORTED COAL UNIT

600MW TO KESC

CASE A2

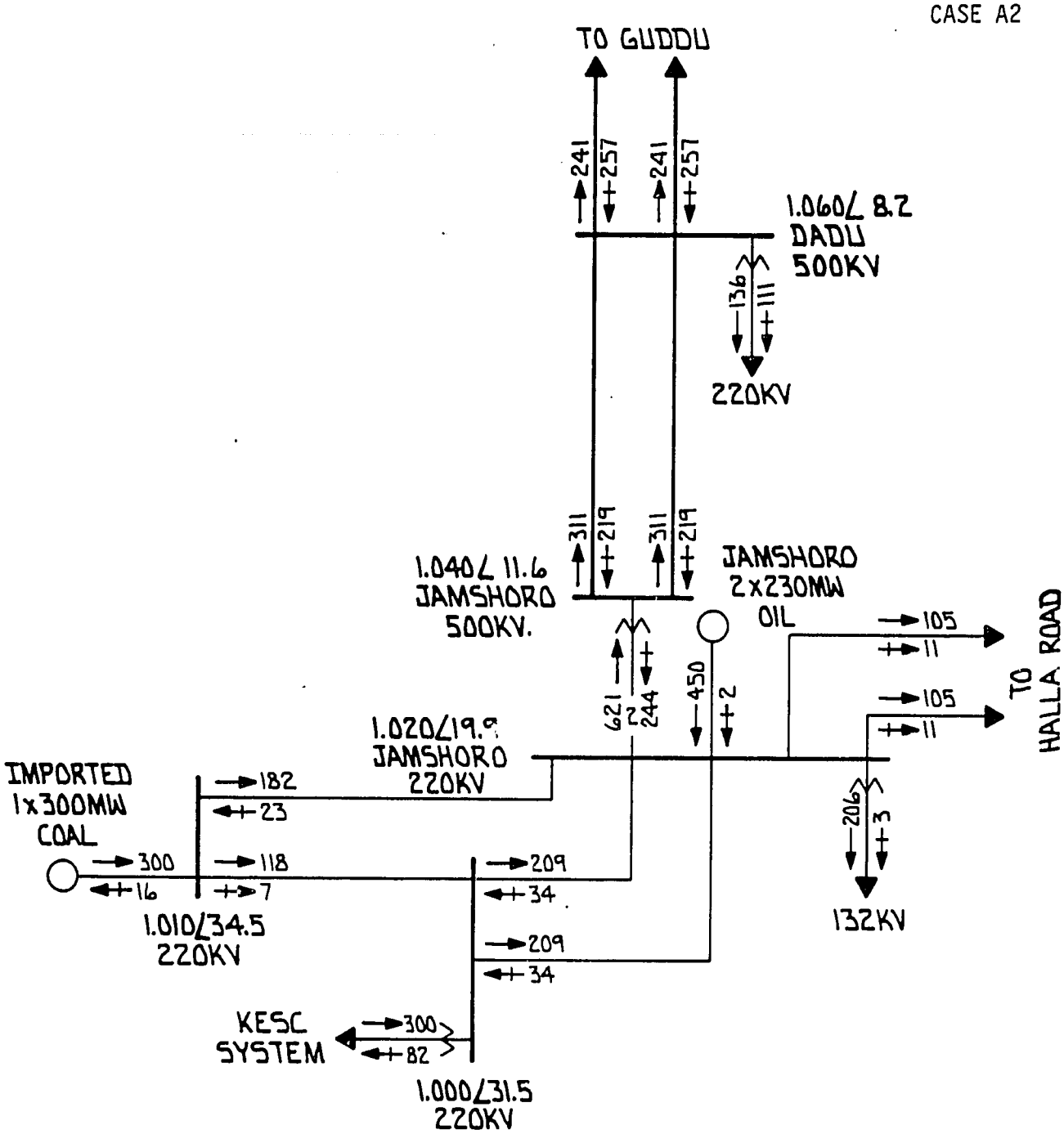


LAKHRA POWER FEASIBILITY STUDY

LOAD PK YEAR 1991 SEASON LOW WATER

CASE A2 PLAN 1

1-300MW IMPORTED COAL UNIT

300MW FROM KESC

CASE A3

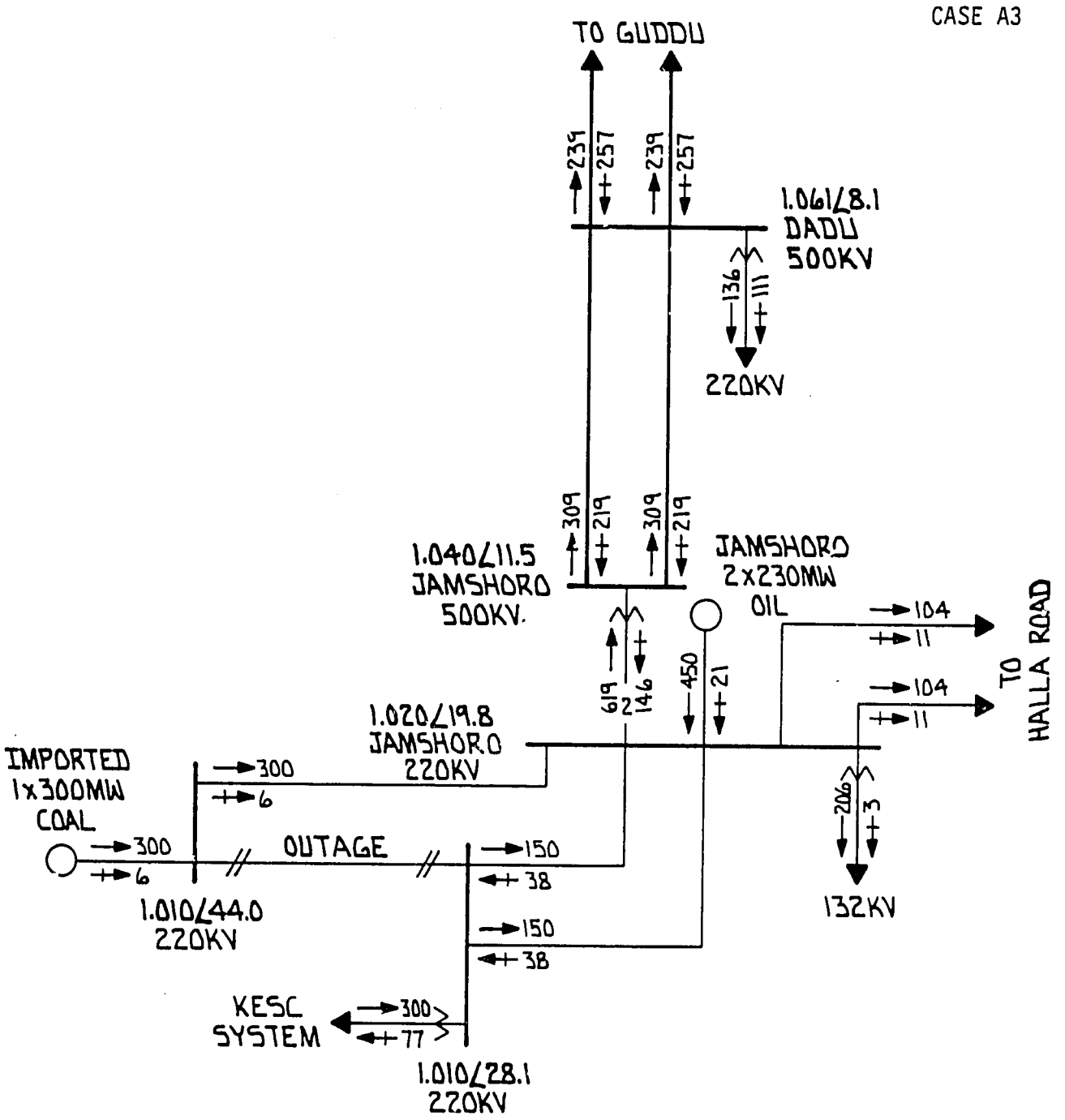


## LAKHRA POWER FEASIBILITY STUDY

LOAD PK YEAR 1991 SEASON LOW WATER

CASE A3 PLAN 1

1-300MW IMPORTED COAL UNIT

300MW FROM KESC

IMPORTED COAL - KESC CKT OUTAGE

CASE B1

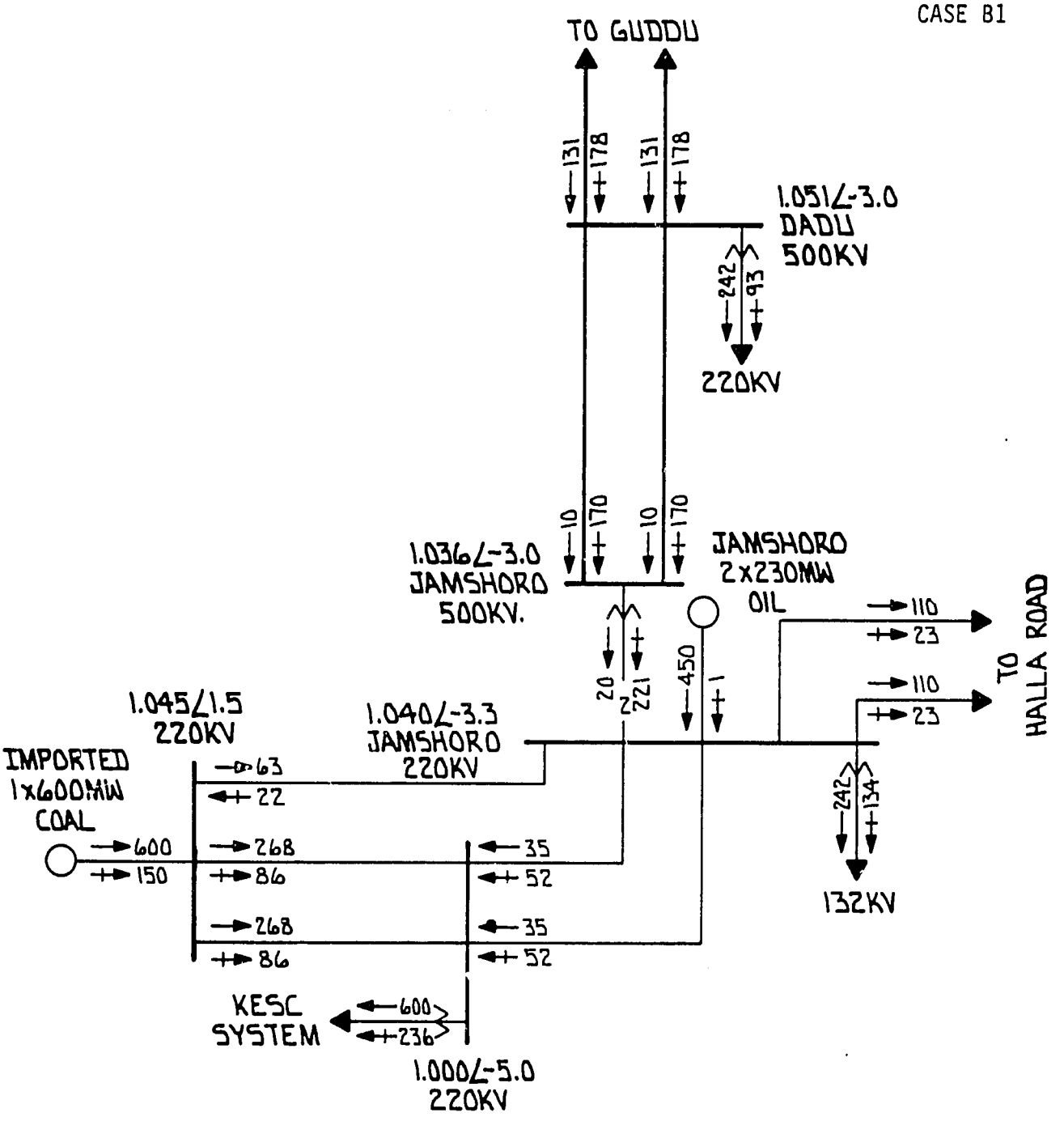


LAKHRA POWER FEASIBILITY STUDY

LOAD PK YEAR 1991 SEASON HIGH WATER

CASE B1 PLAN 2

1·600MW IMPORTED COAL UNIT

600MW TO KESC

CASE B2

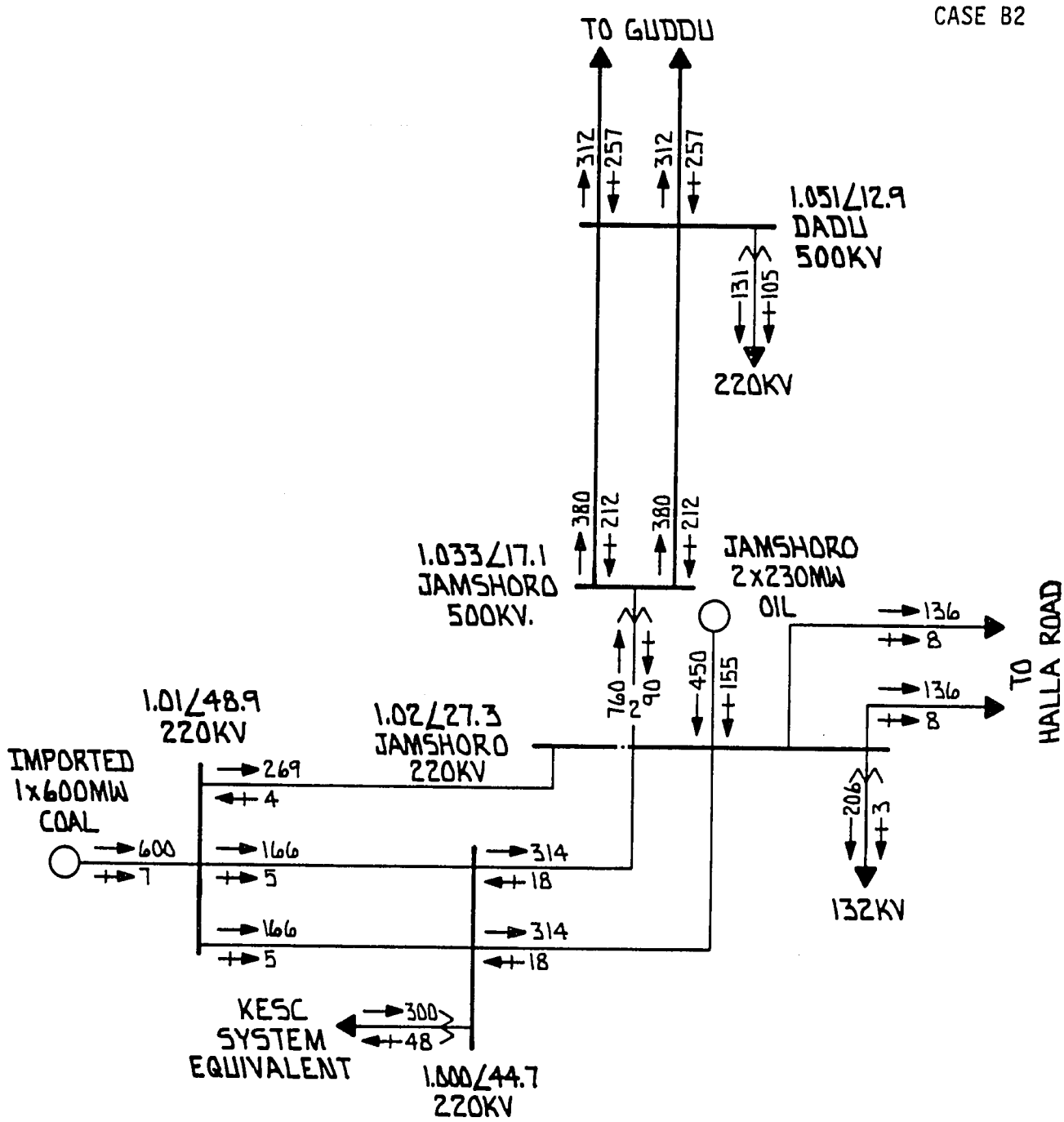


LAKHRA POWER FEASIBILITY STUDY

LOAD PK YEAR 1991 SEASON LOW WATER

CASE B2 PLAN 2

1-600MW IMPORTED COAL UNIT

300MW FROM KESC

CASE B3

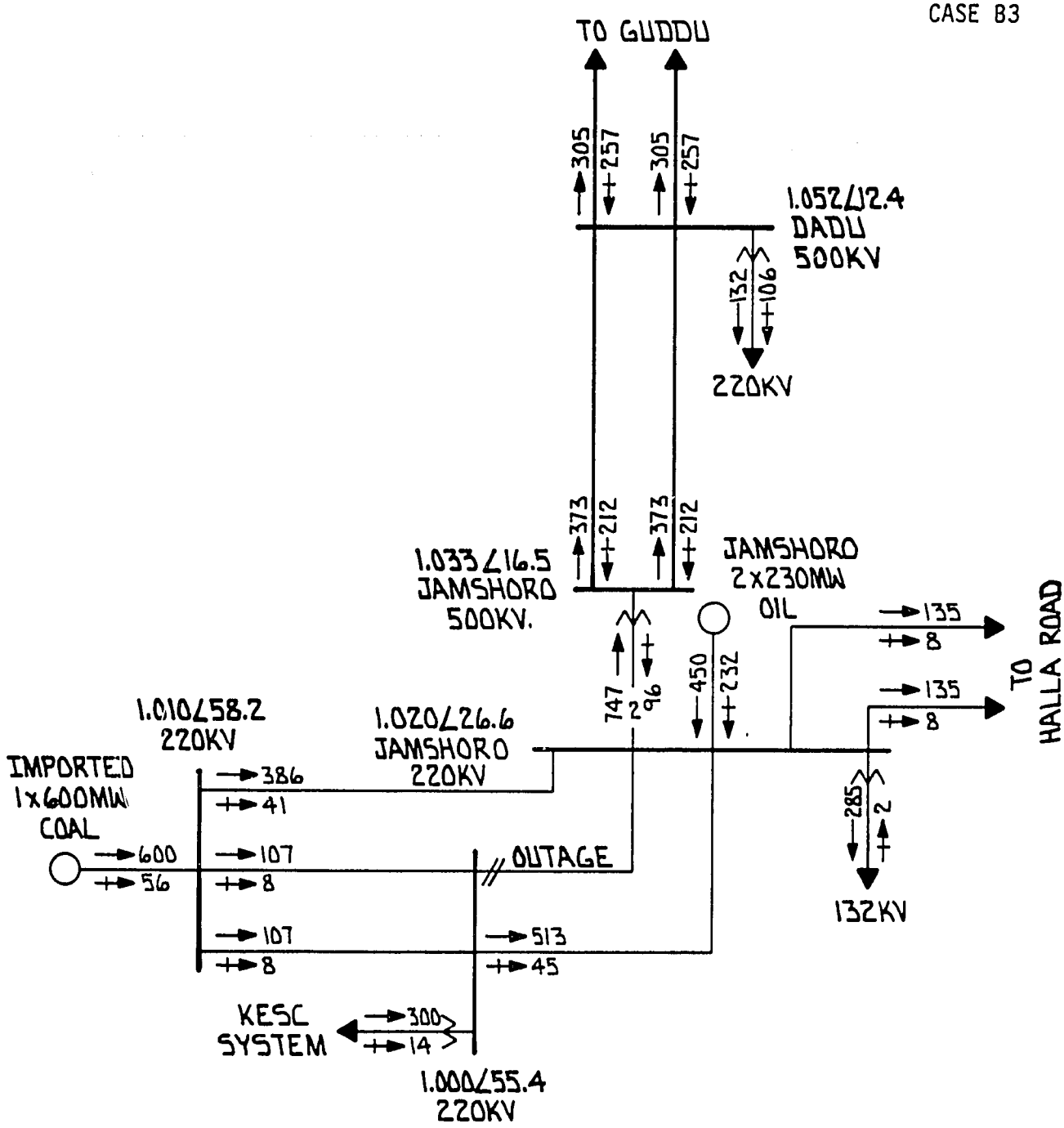


LAKHRA POWER FEASIBILITY STUDY

LOAD PK YEAR 1991 SEASON LOW WATER

CASE B3 PLAN 2

1-600MW IMPORTED COAL UNIT

300MW FROM KESC

KESC - JAMSHORO OUTAGE

CASE B4

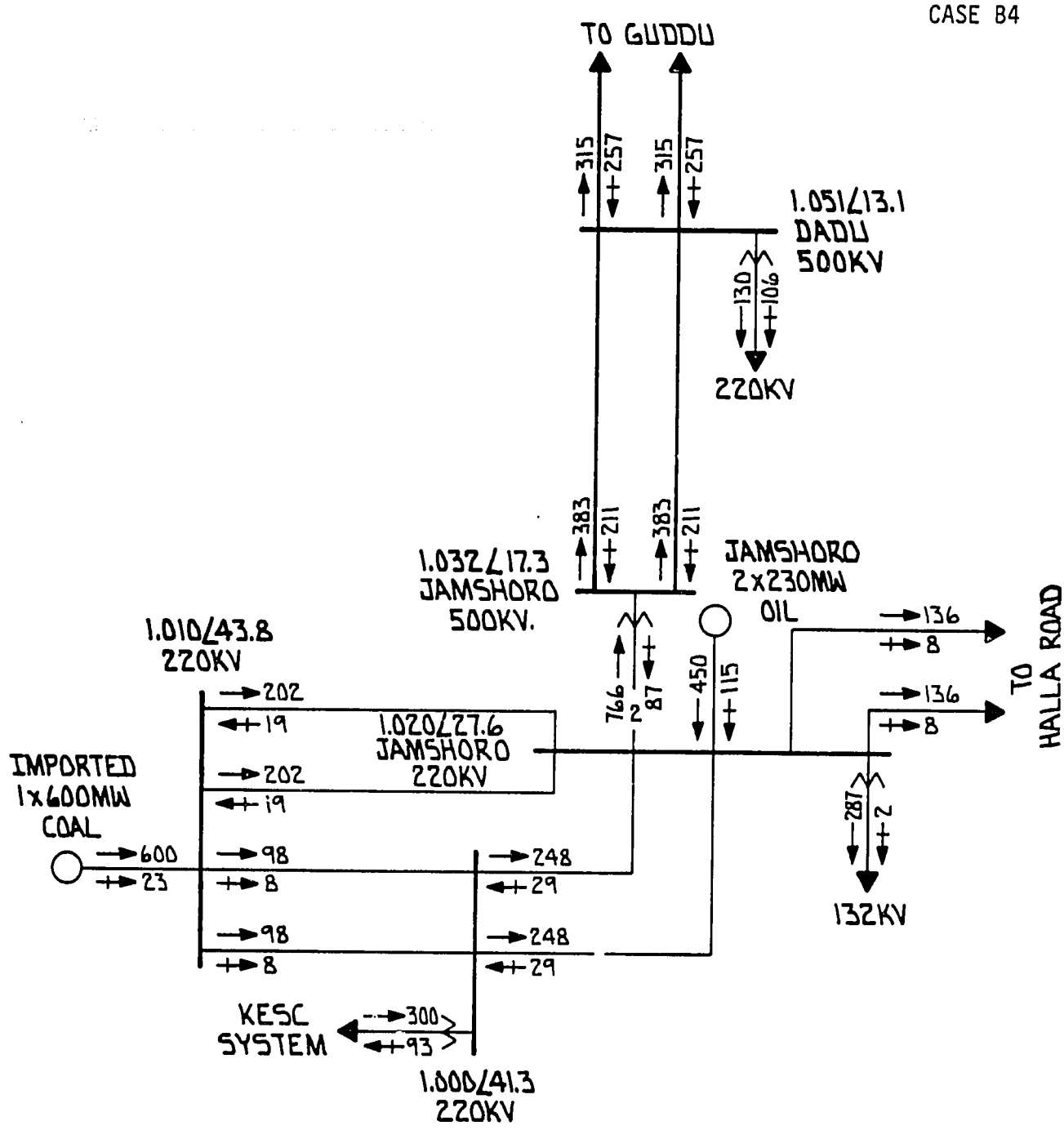


LAKHRA POWER FEASIBILITY STUDY

LOAD PK YEAR 1991 SEASON LOW WATER

CASE B4 PLAN 2A

1-600MW IMPORTED COAL UNIT

300MW FROM KESC

CASE C1

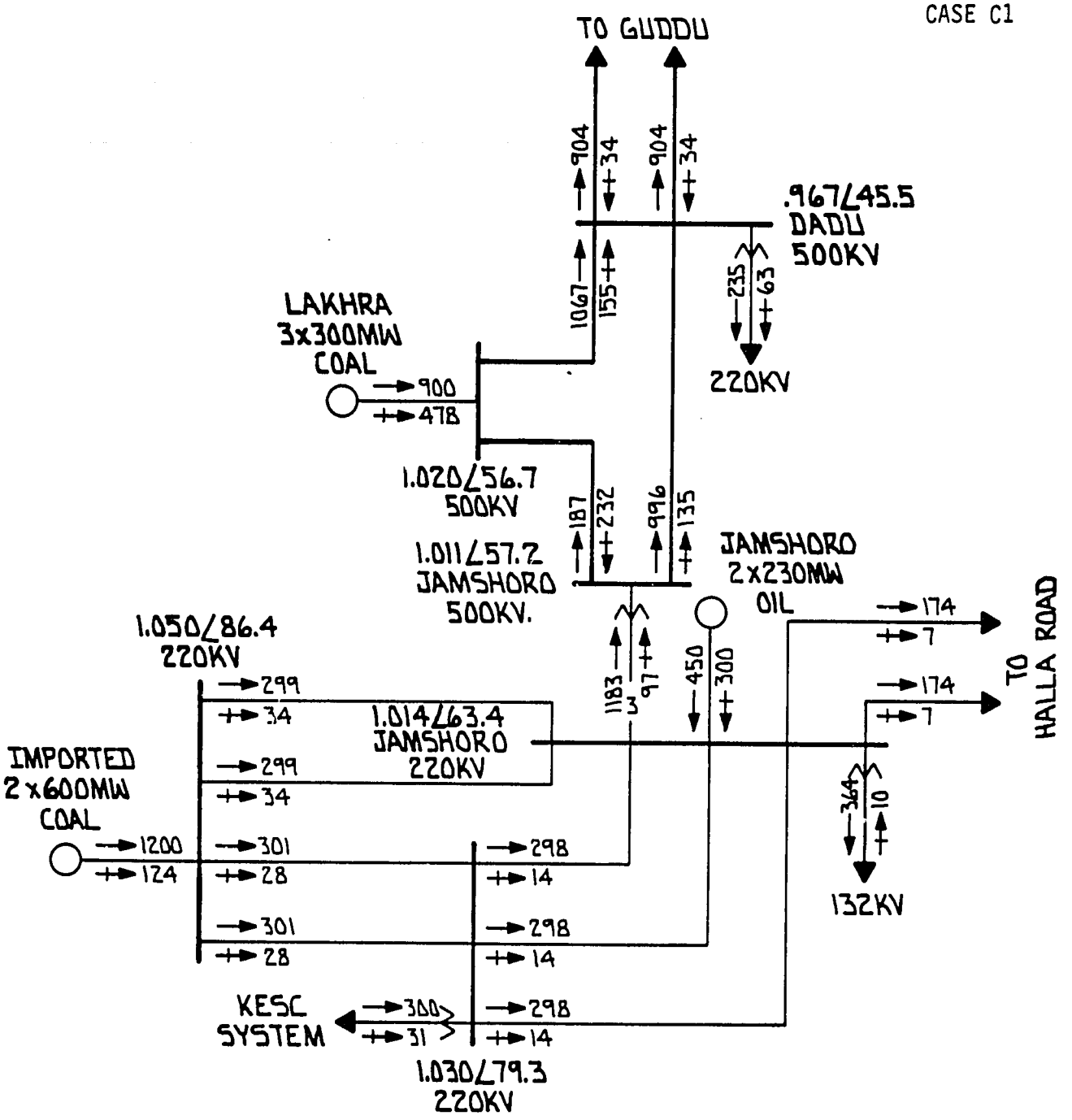


LAKHRA POWER FEASIBILITY STUDY

LOAD PK YEAR 1993 SEASON LOW WATER

CASE C1 PLAN 3

2-600MW IMPORTED COAL UNIT

300MW FROM KESC

CASE C2

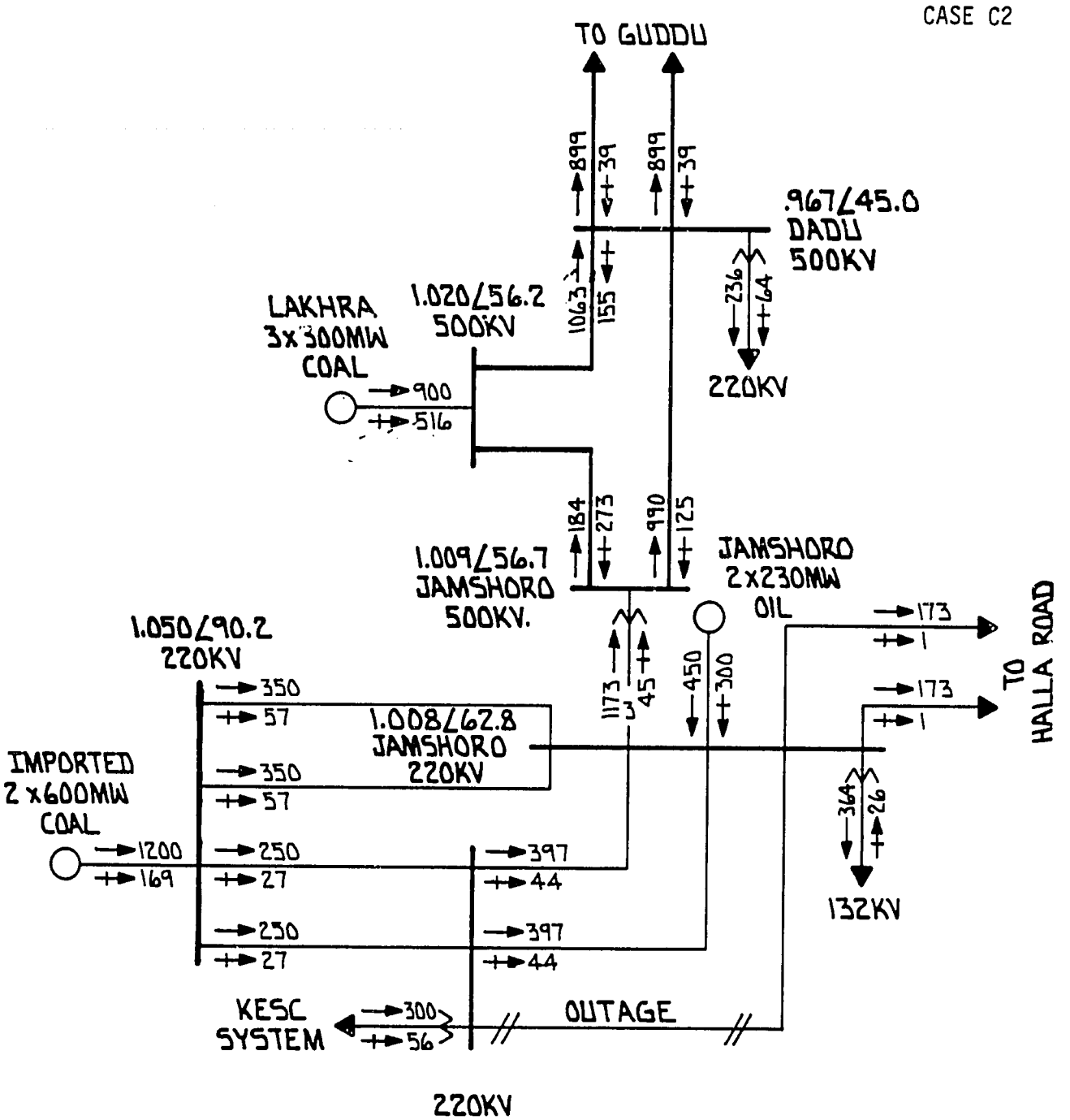


LAKHRA POWER FEASIBILITY STUDY

LOAD PK YEAR 1993 SEASON LOW WATER

CASE C2 PLAN 3

2-600MW IMPORTED COAL UNIT

300MW FROM KESC

KESC-JAMSHORO CKT OUTAGE

CASE C3

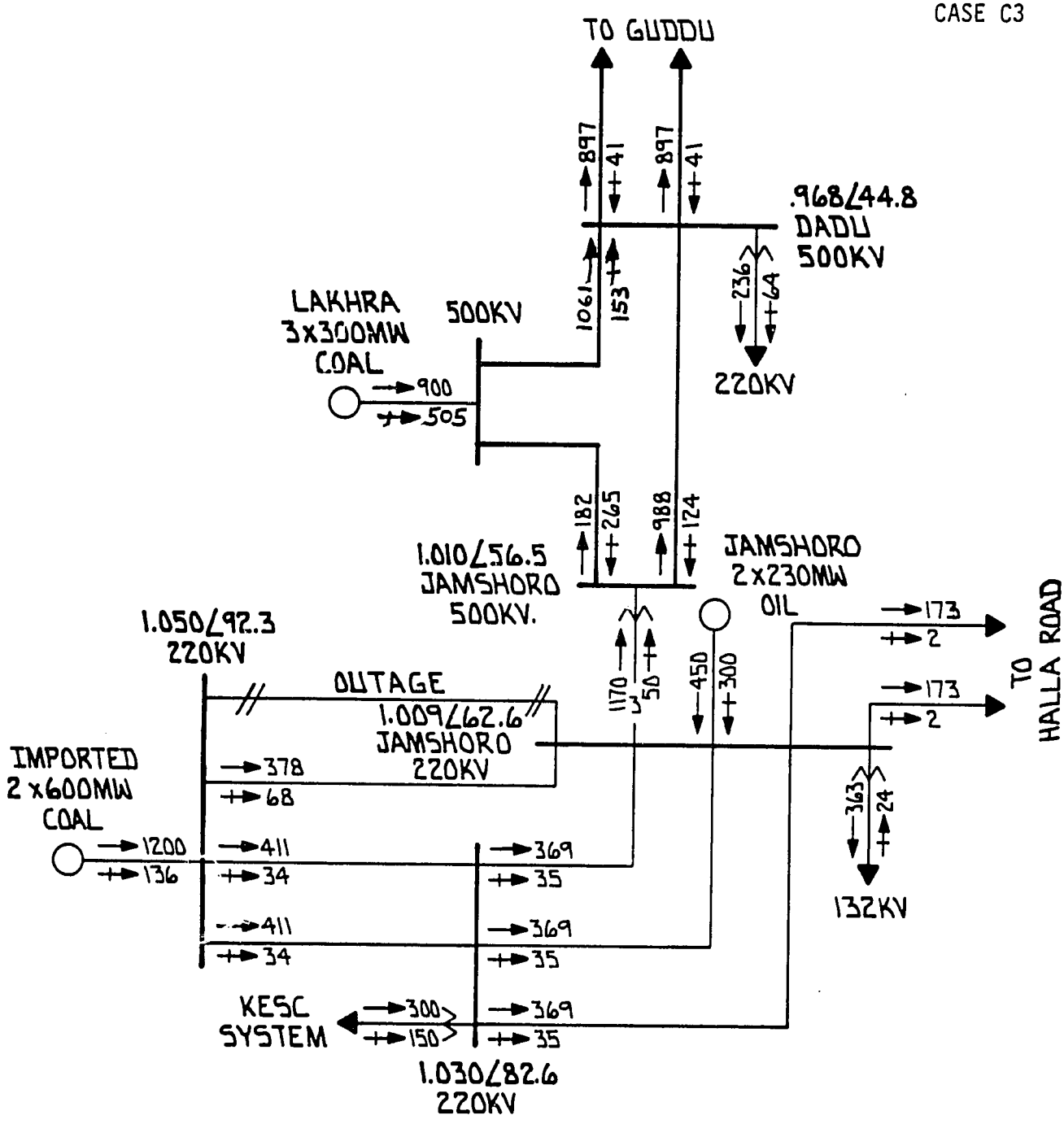


LAKHRA POWER FEASIBILITY STUDY

LOAD PK YEAR 1993 SEASON LOW WATER

CASE C3 PLAN 3

2-600MW IMPORTED COAL UNIT

300MW FROM KESC

IMPORTED COAL-JAMSHORO CKT OUTAGE



211

CASE C4

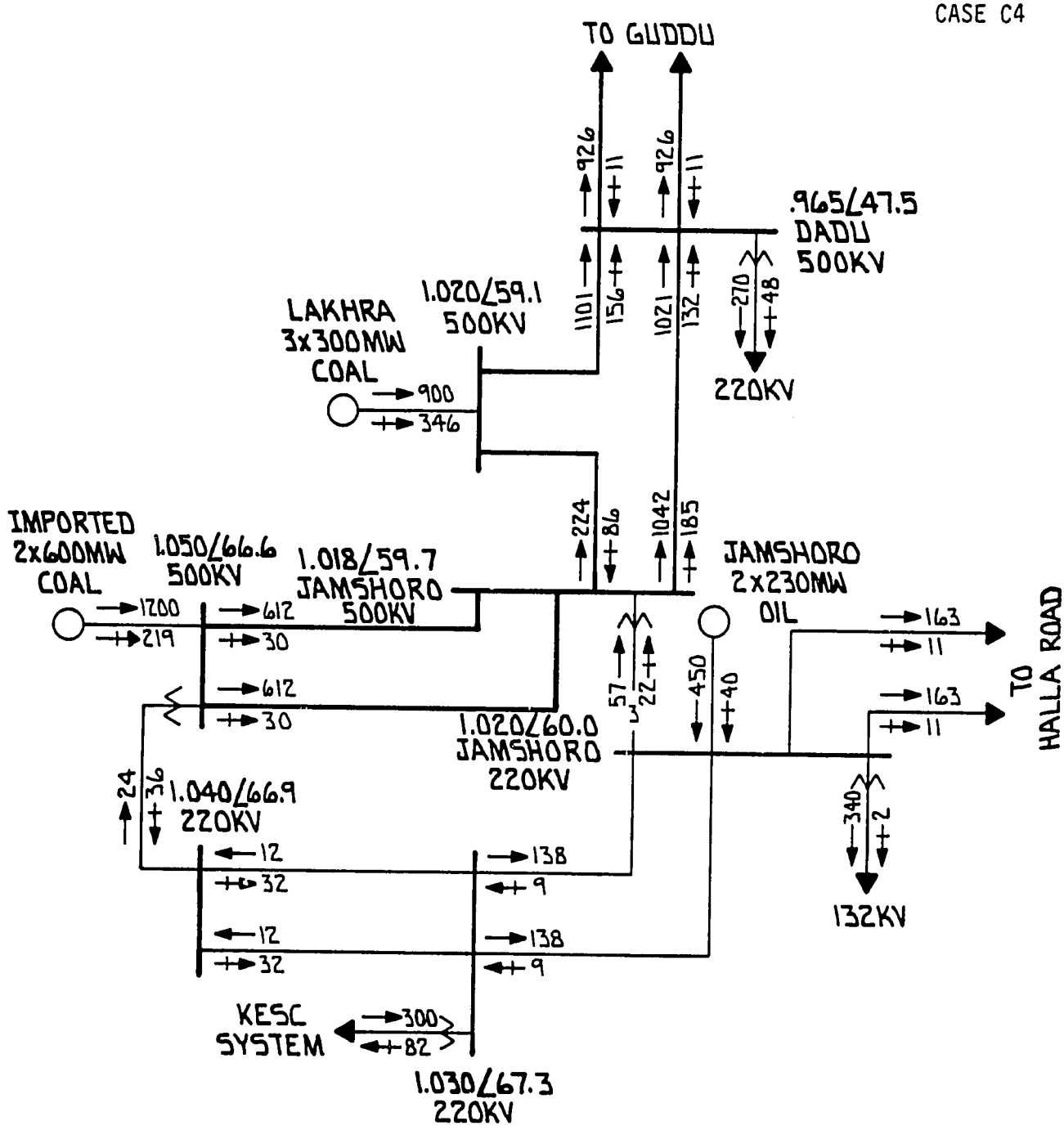


LAKHRA POWER FEASIBILITY STUDY

LOAD PK YEAR 1993 SEASON LOW WATER

CASE C4 PLAN 4

2-600MW IMPORTED COAL UNIT

300 MW FROM KESC

APPENDIX 3.4

TRANSMISSION SYSTEM
COST ESTIMATES

# INDEX TO
# APPENDIX 3.4

Transmission Line Unit Prices and Estimated Transmission Line Costs for Lakhra Project

Transmission Line Unit Prices and Estimated Transmission Line Costs for Imported Coal Project

Substation Equipment Unit Prices

Prices for Generator Step-Up Transformers

Lakhra Project Substation Cost Estimates (300 MW Unit Size)

- Plan J1 - Jamshoro (1990)
- Plan J1 - Jamshoro (1992)
- Plan J2 - Jamshoro (1990)
- Plan J2 - Jamshoro (1992)
- Plan L1 - Jamshoro (1990)
- Plan L1 - Lakhra/Khanot (1990)
- Plan L1 - Jamshoro (1992)
- Plan L1 - Lakhra/Khanot (1992)
- Plan L2 - Jamshoro (1990)
- Plan L2 - Lakhra/Khanot (1990)
- Plan L2 - Jamshoro (1992)
- Plan L2 - Lakhra/Khanot (1992)

Lakhra Project Substation Cost Estimates (350 MW Unit Size)

- Plan A - Lakhra/Khanot - First 350 MW Unit
- Plan B - Lakhra/Khanot - Second 350 MW Unit

Imported Coal Project Substation Cost Estimates

- Plan 1 - Import Coal
- Plan 2 - Import Coal
- Plan 2A - Import Coal
- Plan 3 - Import Coal
- Plan 4 - Import Coal
- Plan 1 - KESC
- Plans 2, 2A and 4 - KESC
- Plan 3 - KESC
- Plans 1 and 2 - Jamshoro
- Plan 2A - Jamshoro
- Plan 3 - Jamshoro
- Plan 4 - Jamshoro

## TRANSMISSION LINE UNIT PRICES (a)

| | | Million Rs/Km | |
|---|---|---|---|
| | | 1983-84 | July 1985(b) |
| 1. | 500 kV Single Circuit | 2.61 | 3.29 |
| 2. | 220 kV Double Circuit | 1.50 | 1.89 |

## ESTIMATED TRANSMISSION LINE COSTS FOR LAKHRA PROJECT

| Plan | Transmission | km | Unit | Total (July 1985) Rsx1,000 | USx1,000 |
|---|---|---|---|---|---|
| J.1 | None | | | | |
| J.2 | None | | | | |
| L.1 | Lakhra-Jamshoro 220 kV D/C 1990 | 46 | 1.89 | 86,980 | 5,540 |
| | Lakhra-Jamshoro 220 kV D/C 1992 | 46 | 1.89 | 86,980 | 5,540 |
| L.2 | Lakhra-to intersect Jams-Dadu 500 kV S/C 1990 | 2x16=32 | 3.29 | 105,284 | 6,704 |
| K.1 | Khanot-Jamshoro 220 kV D/C 1990 | 33 | 1.89 | 62,399 | 3,974 |
| | Khanot-Jamshoro 220 kV D/C 1992 | 33 | 1.89 | 62,399 | 3,974 |
| K.2 | Khanot-to intersect Jams-Dadu 500 kV S/C 1990 | 2x3=6 | 3.29 | 19,741 | 1,257 |

(a) Inclusive of general items of expense, e.g., administrator, audit, inspection, interest during construction, etc.
(b) Escalation at 6.5% annual rate for 18 months gives 10% total. Also, adjustment made for change of exchange rate of 13.7 to 15.7 from 1983 to 1985.

## TRANSMISSION LINE UNIT PRICES (a)

| Code | Description | Million Rs/km July 1985 |
|---|---|---|
| 500 kV | 500 kV Single Circuit - Standard Design | 3.29 |
| 500 kV-M | 500 kV Single Circuit - Modified Design | 3.78 |
| D/C-220 kV | 220 kV Double Circuit - Standard Design | 1.89 |
| D/C-220 kV-M | 220 kV Double Circuit - Modified Design | 2.54 |
| D/C(1)-220 kV-M | 220 kV Double Circuit With One Circuit Strung - Modified Design | 1.69 |

## ESTIMATE TRANSMISSION LINE COSTS FOR IMPORTED COAL PROJECT

| Plan | Transmission | km | Unit | Total (July 1985) Rsx1,000 | USx1,000 |
|---|---|---|---|---|---|
| 1 | Import Coal - KESC D/C-220 kV-M | 60 | 2.54 | 152,400 | 9,710 |
| | KESC - Jamshoro D/C(1)-220 kV-M | 129 | 1.69 | 218,010 | 13,890 |
| 2 | Import Coal - KESC D/C-220 kV-M | 60 | 2.54 | 152,400 | 9,710 |
| | Import Coal - Jamshoro D/C(1)-220 kV-M | 189 | 1.69 | 319,410 | 20,340 |
| 2A | Import Coal - KESC D/C-220 kV-M | 60 | 2.54 | 152,400 | 9,710 |
| | Import Coal - Jamshoro D/C-220 kV-M | 189 | 2.54 | 480,060 | 30,580 |
| 3 | Import Coal - KESC D/C-200 kV-M | 60 | 2.54 | 152,400 | 9,710 |
| | Import Coal - Jamshoro D/C-220 kV-M | 189 | 2.54 | 480,060 | 30,580 |
| | KESC - Jamshoro D/C(1)-220 kV-M | 129 | 1.69 | 218,010 | 13,890 |
| 4 | Import Coal - Jamshoro 500 kV-M | 189 | 3.78 | 714,420 | 45,500 |
| | Import Coal - Jamshoro 500 kV-M | 189 | 3.78 | 714,420 | 45,500 |
| | Import Coal - KESC D/C-200 kV-M | 60 | 2.54 | 152,400 | 9,710 |

(a) Standard design unit prices are from preceding page. Modified design is to mitigate salt contamination problems. Refer to Section 3.4.7 for discussion.

## SUBSTATION EQUIPMENT UNIT PRICES (a)

| | | Price Rs x 1000 | |
|---|---|---|---|
| | | 1983-84 | July 1985(b) |
| 1. | Autotransformers | | |
| | a. 3-1Ø, 3 x 150 MVA, 500/220 kV | 19,785 | 24,941 |
| | b. 1-3Ø, 160 MVA, 220/132 kV | 10,844 | 13,670 |
| 2. | Shunt Reactors | | |
| | a. 1Ø, 37 MVAR, 500 kV | 3,751 | 4,728 |
| | b. 1Ø, 22 MVAR, 500 kV | 2,625 | 3,309 |
| 3. | Circuit Breakers | | |
| | a. 500 kV, SF-6, 40 kA | 2,762 | 3,482 |
| | b. 220 kV, SF-6, 40 kA | 967 | 1,219 |
| | c. 132 kV, 31.5 kA | 306 | 386 |
| 4. | Isolators with Earth Blades (Line Disconnect) | | |
| | a. 500 kV | 864 | 1,089 |
| | b. 220 kV | 214 | 269 |
| | c. 132 kV | 57 | 72 |
| 5. | Isolators without Earth Blades (Breaker Disconnect) | | |
| | a. 500 kV | 714 | 900 |
| | b. 220 kV | 169 | 213 |
| | c. 132 kV | 47 | 59 |
| 6. | Potential Transformer | | |
| | a. 500 kV | 273 | 344 |
| | b. 220 kV | 119 | 150 |
| | c. 132 kV | 30 | 38 |
| 7. | Current Transformers | | |
| | a. 500 kV | 434 | 547 |
| | b. 220 kV | 132 | 166 |
| | c. 132 kV | 30 | 38 |
| 8. | Lightning Arresto s | | |
| | a. 500 kV | 194 | 245 |
| | b. 220 kV | 58 | 73 |
| | c. 132 kV | 21 | 26 |

(a) 500 kV unit prices from Tarbela-Lahore PC-1, 220 and 132 kV unit prices from Mardan-Peshawar PC-1.

(b) Escalation at 6.5% annual rate for 18 months gives 10% total. Also, adjustment made for change of exchange rate of 13.7 to 15.7 from 1983 to 1985.

## PRICES FOR GENERATOR STEP-UP TRANSFORMERS

| Description | Shipping[a] Weight | Price[b] US $,000 | Price[c] Rs,000 |
|---|---|---|---|
| 1-3 Phase, 333 MVA, 500-20 kV | 220 | 1,300 | 20,410 |
| 3-1 Phase, 111 MVA each, 500-20 kV | 100 | 1,500 | 23,550 |
| 3-1 Phase, 145 MVA each, 500-20 kV | - | 1,750 | 27,475 |
| 1-3 Phase, 333 MVA, 220-20 kV | 220 | 1,100 | 17,270 |
| 3-1 Phase, 111 MVA each, 220-20 kV | 100 | 1,300 | 20,410 |
| 3-1 Phase, 222 MVA each 500-20 kV | - | 2,250 | 35,325 |
| 3-1 Phase, 222 MVA each 220-20 kV | - | 1,950 | 30,615 |

(a) Shipping weight in tons (2,000 lbs) for 3 phase tank or one 1 phase tank.

(b) Estimated price including transportation costs to Karachi.

(c) Assuming $1 = 15.7 Rs.

# SUBSTATION COST ESTIMATE



PROJECT: Jamshoro 550/220kV Substation - Plan J1 (1990)

% Duty Rate: 40

BY:TLHoke DATE:Mar 4, 1985

Monetary Unit: Rs x1,000(JUNE'85) Exch Rate (Rs/$)= 15.7 CHECKED:DShafer DATE:

| ITEM AND DESCRIPTION | QTY | UNIT | Foreign Exchange US$/Unit | Foreign Exchange Rs/Unit | Local Cost Rs/Unit | F.E.C. Totals | LOCAL COSTS Totals | DUTY COSTS Totals | TOTAL COSTS |
|---|---|---|---|---|---|---|---|---|---|
| **550kV EQUIPMENT ITEMS:** | | | | | | | | | |
| 7.150MVA,550/220kV Autotransf (w Tert & Arresters) | 0 | ea. | | 23541 | 4588 | 0 | 0 | 0 | 0 |
| 550 kV Circuit Breaker, SF6, 4000A | 0 | ea. | | 7452 | 691 | 0 | 0 | 0 | 0 |
| Breaker Disconnect Switch | 0 | ea. | | 640 | 179 | 0 | 0 | 0 | 0 |
| Line Disconnect Switch | 0 | ea. | | 1165 | 217 | 0 | 0 | 0 | 0 |
| Surge Arrester | 0 | ea. | | 155 | 77 | 0 | 0 | 0 | 0 |
| Current Transformers | 0 | ea. | | 616 | 121 | 0 | 0 | 0 | 0 |
| Potential Transformers, with Carrier & Line Trap | 0 | ea. | | 821 | 106 | 0 | 0 | 0 | 0 |
| 550kV Buswork (Strain Type, Taps, Jumpers, Fittings) | 0 | Lot | | 0 | 0 | 0 | 0 | 0 | 0 |
| Civil Work: Foundations, Surfacing | 0 | Lot | 0 | 0 | 0 | 0 | 0 | 0 | 0 |
| Relay and Control Work: Transf & Bus Protection | 0 | Lot | 0 | 0 | 0 | 0 | 0 | 0 | 0 |
| Misc. Conduit, Wiring, Grounding, Lighting | 0 | Lot | 0 | 0 | 0 | 0 | 0 | 0 | 0 |
| **220kV EQUIPMENT ITEMS:** | | | | | | | | | |
| 315 MVA, 220/132/33kV 60% Transformer (w Arresters)-1 Ph | 1 | ea. | 170000 | 2041 | 4082 | 2041 | 4082 | 8123 | 12205 |
| 220kV Circuit Breaker, SF6, 4000A | 2 | ea. | | 1215 | 257 | 2429 | 514 | 975 | 3920 |
| Breaker Disconnect Switch | 4 | ea. | | 217 | 47 | 867 | 188 | 341 | 1397 |
| Line Disconnect Switch | 1 | ea. | | 265 | 59 | 265 | 59 | 107 | 431 |
| Surge Arrester | 0 | ea. | | 0 | 0 | 0 | 0 | 0 | 0 |
| Current Transformers | 2 | ea. | | 166 | 75 | 332 | 150 | 266 | 748 |
| Potential Transformers, with Carrier & Line Trap | 0 | ea. | | 0 | 0 | 0 | 0 | 0 | 0 |
| 220kV Buswork (Strain Type, Taps, Jumpers, Fittings) | 1 | Lot | | 57 | 15 | 57 | 15 | 23 | 154 |
| Civil Work: Foundations, Surfacing | 1 | Lot | 0.5 | 5 | 87 | 5 | 87 | 2 | 95 |
| Relay and Control Work: Transf & Bus Protection | 1 | Lot | 0.5 | 795 | 272 | 795 | 272 | 314 | 1381 |
| Misc. Conduit, Wiring, Grounding, Lighting | 1 | Lot | 1.0 | 2 | 16 | 2 | 16 | 6 | 24 |
| Subtotal (x 1,000 Rs) | | | | | | 25861 | 5400 | 10340 | 41601 |
| Contingency (Equipment & Duty Only) | 1 | % | | | | 258 | | 103 | 361 |
| Inland Transport (Equipment Only) | 5 | % | | | | 1293 | | | 1293 |
| Import License (20%, Insurance (5%), Clearance (5%) | 30 | % | | | | 11 | | | 11 |
| Engineering, Administration, Audit & Inspection | 8 | % | | | | 2069 | 432 | 1034 | 3103 |
| Interest During Construction | 17 | % | | | | 4394 | 918 | 2196 | 6590 |
| SUBTOTAL THIS PAGE (x 1,000 Rs) | | | | | | 37735 | 6651 | 14010 | 58396 |

Rev:0, A, B

File:WAPDA-JAM1

US$ 3716.4

# SUBSTATION COST ESTIMATE



PROJECT: Jamshoro 550/220kV Substation - Plan J1 (1992)

% Duty Rate: 40

Monetary Unit: Rs x1,000(JUNE'85) Exch Rate (Rs/$)= 15.7

BY:TLHoke DATE:Mar 4, 1985

CHECKED:DShafer DATE:

| ITEM AND DESCRIPTION | QTY | UNIT | Foreign Exchange US$/Unit | Foreign Exchange Rs/Unit | Local Cost Rs/Unit | F.E.C. Totals | LOCAL COSTS Totals | DUTY COSTS Totals | TOTAL COSTS |
|---|---|---|---|---|---|---|---|---|---|
| **550kV EQUIPMENT ITEMS:** | | | | | | | | | |
| 3x150MVA,550/220kV Autotransf (w/Tert & Arresters) | 1 | ea. | | 24941 | 4988 | 24941 | 4988 | 9976 | 39905 |
| 550kV Circuit Breaker, SF6, 40kA | 2 | ea. | | 2482 | 696 | 6967 | 1392 | 2785 | 11140 |
| Breaker Disconnect Switch | 4 | ea. | | 900 | 179 | 3596 | 716 | 1439 | 5752 |
| Line Disconnect Switch | 1 | ea. | | 1085 | 217 | 1085 | 217 | 435 | 1737 |
| Surge Arrester | 0 | ea. | | 169 | 77 | 0 | 0 | 0 | 0 |
| Current Transformers | 6 | ea. | | 610 | 121 | 3658 | 726 | 1453 | 5847 |
| Potential Transformers, with Carrier & Line Trap | 0 | ea. | | 571 | 106 | 0 | 0 | 0 | 0 |
| 550kV Buswork (Strain Type, Taps, Jumpers, Fittings) | 1 | Lot | | 400 | 79 | 400 | 79 | 159 | 638 |
| Civil Work: Foundations, Surfacing | 1 | Lot | 1800 | 28 | 547 | 28 | 547 | 11 | 586 |
| Relay and Control Work: Transf & Bus Protection | 1 | Lot | 51000 | 800 | 279 | 800 | 279 | 320 | 1399 |
| Misc. Conduit, Wiring, Grounding, Lighting | 1 | Lot | 4630 | 72 | 648 | 72 | 648 | 28 | 748 |
| **220kV EQUIPMENT ITEMS:** | | | | | | | | | |
| 333 MVA, 220/20kV 65U Transformer (w/Arresters)-1 Ph | 2 | ea. | 170000 | 20410 | 4082 | 40820 | 8164 | 16328 | 65312 |
| 220kV Circuit Breaker, SF6, 40kA | 4 | ea. | | 1219 | 253 | 4877 | 1012 | 1950 | 7839 |
| Breaker Disconnect Switch | 8 | ea. | | 213 | 47 | 1705 | 376 | 682 | 2767 |
| Line Disconnect Switch | 3 | ea. | | 269 | 58 | 808 | 174 | 323 | 1305 |
| Surge Arrester | 0 | ea. | | 86 | 17 | 0 | 0 | 0 | 0 |
| Current Transformers | 12 | ea. | | 166 | 35 | 1994 | 420 | 797 | 3211 |
| Potential Transformers, with Carrier & Line Trap | 0 | ea. | 17400 | 277 | 54 | 0 | 0 | 0 | 0 |
| 220kV Buswork (Strain Type, Taps, Jumpers, Fittings) | 1 | Lot | | 165 | 33 | 165 | 33 | 66 | 264 |
| Civil Work: Foundations, Surfacing | 1 | Lot | 1000 | 15 | 85 | 15 | 85 | 6 | 106 |
| Relay and Control Work: Transf & Bus Protection | 1 | Lot | 90000 | 1413 | 440 | 1413 | 440 | 565 | 2418 |
| Misc. Conduit, Wiring, Grounding, Lighting | 1 | Lot | 750 | 6 | 54 | 6 | 54 | 2 | 62 |
| Subtotal (x 1,000 Rs) | | | | | | 93353 | 20310 | 37335 | 150998 |
| Contingency (Equipment & Duty Only) | 10 | % | | | | 9335 | | 3734 | 13069 |
| Inland Transport (Equipment Only) | 5 | % | | | | 5134 | | | 5134 |
| Import License (2%), Insurance (.5%), Clearance (1.2%) | 3.7 | % | | | | 3777 | | | 3777 |
| Engineering, Administration, Audit & Inspection | 5 | % | | | | 5554 | 1020 | 3496 | 15470 |
| Interest During Construction | 17 | % | | | | 15671 | 3972 | 5819 | 24462 |
| SUBTOTAL THIS PAGE (x 1,000 Rs) | | | | | | 136220 | 25016 | 50584 | 211820 |

US$ 13492066

Rev:0, A, B

File:WAPDA-14M2

# SUBSTATION COST ESTIMATE



PROJECT: Jamshoro 550/220kV Substation - Plan J2 (1990)

% Duty Rate: 40

Monetary Unit: Rs x1,000(JUNE'85) Exch Rate (Rs/$)= 15.7

BY:TLHoke DATE:Mar 4, 1985

CHECKED:DShafer DATE:

| ITEM AND DESCRIPTION | Item QTY | Item UNIT | Foreign Exchange US$/Unit | Foreign Exchange Rs/Unit | Local Cost Rs/Unit | F.E.C. Totals | LOCAL COSTS Totals | DUTY COSTS Totals | TOTAL COSTS |
|---|---|---|---|---|---|---|---|---|---|
| **550kV EQUIPMENT ITEMS:** | | | | | | | | | |
| 3x111MVA,550/20 kV Gen Stepup (w/Arresters), 1Ph/Tank | 1 | ea. | 1500000 | 23550 | 4710 | 23550 | 4710 | 9420 | 37680 |
| 550kV Circuit Breaker, SF6, 40kA | 2 | ea. | | 3482 | 696 | 6963 | 1392 | 2785 | 11140 |
| Breaker Disconnect Switch | 4 | ea. | | 900 | 179 | 3578 | 716 | 1432 | 5726 |
| Line Disconnect Switch | 1 | ea. | | 1089 | 217 | 1089 | 217 | 435 | 1741 |
| Surge Arrester | 0 | ea. | | 169 | 37 | 0 | 0 | 0 | 0 |
| Current Transformers | 6 | ea. | | 610 | 121 | 3658 | 726 | 1463 | 5847 |
| Potential Transformers, with Carrier & Line Trap | 0 | ea. | | 571 | 106 | 0 | 0 | 0 | 0 |
| 550kV Buswork (Strain Type, Tape, Jumpers, Fittings) | 1 | Lot | | 414 | 82 | 414 | 82 | 165 | 661 |
| Civil Work: Foundations, Surfacing | 1 | Lot | 1620 | 25 | 547 | 25 | 547 | 10 | 582 |
| Relay and Control Work: Transf & Bus Protection | 1 | Lot | 40000 | 628 | 204 | 628 | 204 | 251 | 1087 |
| Misc. Conduit, Wiring, Grounding, Lighting | 1 | Lot | 4600 | 72 | 648 | 72 | 648 | 28 | 748 |
| **220kV EQUIPMENT ITEMS:** | | | | | | | | | |
| 3x111MVA,220/20 kV Gen Stepup (w/Arresters), 1Ph/Tank | 0 | ea. | 1700000 | 20410 | 4082 | 0 | 0 | 0 | 0 |
| 220kV Circuit Breaker, SF6, 40kA | 0 | ea. | | 1219 | 252 | 0 | 0 | 0 | 0 |
| Breaker Disconnect Switch | 0 | ea. | | 217 | 47 | 0 | 0 | 0 | 0 |
| Line Disconnect Switch | 0 | ea. | | 269 | 58 | 0 | 0 | 0 | 0 |
| Surge Arrester | 0 | ea. | | 84 | 1 | 0 | 0 | 0 | 0 |
| Current Transformers | 0 | ea. | | 166 | 35 | 0 | 0 | 0 | 0 |
| Potential Transformers, with Carrier & Line Trap | 0 | ea. | 4800 | 75 | 15 | 0 | 0 | 0 | 0 |
| 220kV Buswork (Strain Type, Tape, Jumpers, Fittings) | 0 | Lot | | 0 | 0 | 0 | 0 | 0 | 0 |
| Civil Work: Foundations, Surfacing | 0 | Lot | 0 | 0 | 0 | 0 | 0 | 0 | 0 |
| Relay and Control Work: Transf & Bus Protection | 0 | Lot | 0 | 0 | 0 | 0 | 0 | 0 | 0 |
| Misc. Conduit, Wiring, Grounding, Lighting | 0 | Lot | 0 | 0 | 0 | 0 | 0 | 0 | 0 |
| Subtotal (x 1,000 Rs) | | | | | | 39997 | 9242 | 15996 | 65235 |
| Contingency (Equipment & Duty Only) | 10 | % | | | | 4000 | | 1600 | 5600 |
| Inland Transport (Equipment Only) | 5 | % | | | | 2000 | | | 2000 |
| Import License (2%), Insurance (.5%), Clearance (.2%) | 2.7 | % | | | | 1188 | | | 1188 |
| Engineering, Administration, Audit & Inspection | 5 | % | | | | 4265 | 872 | 1584 | 6681 |
| Interest During Construction | 12 | % | | | | 6715 | 1310 | 2452 | 10516 |
| SUBTOTAL THIS PAGE (x 1,000 Rs) | | | | | | 58365 | 11384 | 21673 | 91422 |

US$ 5822000

Rev:0, A, B

File:WAPDA-JAM3

# SUBSTATION COST ESTIMATE



PROJECT: Jamshoro 550/220kV Substation - Plan J2 (1992)

% Duty Rate: 40 BY:TLHoke DATE:Mar 4, 1985

Monetary Unit: Rs x1,000(JUNE'85) Exch Rate (Rs/$)= 15.7 CHECKED:DShafer DATE:

| ITEM AND DESCRIPTION | Item QTY | Item UNIT | Foreign Exchange US$/Unit | Foreign Exchange Rs/Unit | Local Cost Rs/Unit | F.E.C. Totals | LOCAL COSTS Totals | DUTY COSTS Totals | TOTAL COSTS |
|---|---|---|---|---|---|---|---|---|---|
| **550kV EQUIPMENT ITEMS:** | | | | | | | | | |
| 3x150MVA,550/220kV Autotransf (w/Tert & Arresters) | 1 | ea. | | 24941 | 4988 | 24941 | 4988 | 9976 | 39905 |
| 3x111MVA,550/20 kV Gen Stepup (w/Arresters), 1Ph/Tank | 2 | ea. | 1500000 | 23550 | 4710 | 47100 | 9420 | 18840 | 75360 |
| 550kV Circuit Breaker, SF6, 40kA | 4 | ea. | | 3462 | 696 | 13926 | 2784 | 5570 | 22280 |
| Breaker Disconnect Switch | 8 | ea. | | 900 | 179 | 7197 | 1432 | 2878 | 11507 |
| Line Disconnect Switch | 3 | ea. | | 1089 | 217 | 3266 | 651 | 1306 | 5223 |
| Surge Arrester | 0 | ea. | | 189 | 37 | 0 | 0 | 0 | 0 |
| Current Transformers | 12 | ea. | | 610 | 121 | 7316 | 1452 | 2926 | 11694 |
| Potential Transformers, with Carrier & Line Trap | 0 | ea. | | 531 | 106 | 0 | 0 | 0 | 0 |
| 550kV Buswork (Strain Type, Taps, Jumpers, Fittings) | 1 | Lot | | 811 | 162 | 811 | 162 | 324 | 1297 |
| Civil Work: Foundations, Surfacing | 1 | Lot | 2970 | 46 | 551 | 46 | 551 | 18 | 615 |
| Relay and Control Work: Transf & Bus Protection | 1 | Lot | 120000 | 1884 | 691 | 1884 | 691 | 753 | 3328 |
| Misc. Conduit, Wiring, Grounding, Lighting | 1 | Lot | 4600 | 72 | 648 | 72 | 648 | 28 | 748 |
| **220kV EQUIPMENT ITEMS:** | | | | | | | | | |
| 220kV Circuit Breaker, SF6, 40kA | 1 | ea. | | 1219 | 253 | 1219 | 253 | 487 | 1959 |
| Breaker Disconnect Switch | 1 | ea. | | 217 | 47 | 217 | 47 | 65 | 345 |
| Line Disconnect Switch | 1 | ea. | | 269 | 58 | 269 | 58 | 107 | 434 |
| Surge Arrester | 0 | ea. | | 86 | 1 | 0 | 0 | 0 | 0 |
| Current Transformers | 3 | ea. | | 166 | 35 | 499 | 105 | 199 | 803 |
| Potential Transformers, with Carrier & Line Trap | 0 | ea. | 17400 | 273 | 54 | 0 | 0 | 0 | 0 |
| 220kV Buswork (Strain Type, Taps, Jumpers, Fittings) | 1 | Lot | | 83 | 16 | 83 | 16 | 33 | 132 |
| Civil Work: Foundations, Surfacing | 1 | Lot | 216 | 3 | 82 | 3 | 82 | 1 | 86 |
| Relay and Control Work: Transf & Bus Protection | 1 | Lot | 41000 | 643 | 207 | 643 | 207 | 257 | 1107 |
| Misc. Conduit, Wiring, Grounding, Lighting | 1 | Lot | 75 | 1 | 9 | 1 | 9 | 0 | 10 |
| Subtotal (x 1,000 Rs) | | | | | | 109489 | 23556 | 43788 | 176833 |
| Contingency (Equipment & Det. Only) | 10 | % | | | | 10949 | | 4378 | 15328 |
| Inland Transport (Equipment Only) | 5 | % | | | | 5475 | | | 5475 |
| Import License (2%), Insurance (.5%), Clearance (.2%) | 2.7 | % | | | | 2957 | | | 2957 |
| Engineering, Administration, Audit & Inspection | 9 | % | | | | 11674 | 2120 | 4335 | 18129 |
| Interest During Construction | 17 | % | | | | 18756 | 3406 | 6825 | 29987 |
| SUBTOTAL THIS PAGE (x 1,000 Rs) | | | | | | 159766 | 29014 | 59327 | 248107 |

Rev:0, A, B

File:WAPDA-JAM4

US$ 15803000

# SUBSTATION COST ESTIMATE



## Jamshoro 550/220kV Substation - Plan L1 (1990)

% Duty Rate: 40
Monetary Unit: Rs x1,000(JUNE'85)
Exch Rate (Rs/$)= 15.7

BY:TLHoke DATE:Mar 4, 1985
CHECKED:DShafer DATE:

| ITEM AND DESCRIPTION | Item QTY | Item UNIT | Foreign Exchange US$/Unit | Foreign Exchange Rs/Unit | Local Cost Rs/Unit | F.E.C. Totals | LOCAL COSTS Totals | DUTY COSTS Totals | TOTAL COSTS |
|---|---|---|---|---|---|---|---|---|---|
| **550kV EQUIPMENT ITEMS:** | | | | | | | | | |
| 3x150MVA,550/220kV Autotransf (w/Tert & Arresters) | 0 | ea. | | 24941 | 4988 | 0 | 0 | 0 | 0 |
| 550kV Circuit Breaker, SF6, 40kA | 0 | ea. | | 3462 | 696 | 0 | 0 | 0 | 0 |
| Breaker Disconnect Switch | 0 | ea. | | 900 | 179 | 0 | 0 | 0 | 0 |
| Line Disconnect Switch | 0 | ea. | | 1089 | 217 | 0 | 0 | 0 | 0 |
| Surge Arrester | 0 | ea. | | 189 | 37 | 0 | 0 | 0 | 0 |
| Current Transformers | 0 | ea. | | 610 | 121 | 0 | 0 | 0 | 0 |
| Potential Transformers, with Carrier & Line Trap | 0 | ea. | | 531 | 106 | 0 | 0 | 0 | 0 |
| 550kV Buswork (Strain Type, Taps, Jumpers, Fittings) | 0 | Lot | | 0 | 0 | 0 | 0 | 0 | 0 |
| Civil Work: Foundations, Surfacing | 0 | Lot | 0 | 0 | 0 | 0 | 0 | 0 | 0 |
| Relay and Control Work: Transf & Bus Protection | 0 | Lot | 0 | 0 | 0 | 0 | 0 | 0 | 0 |
| Misc. Conduit, Wiring, Grounding, Lighting | 0 | Lot | 0 | 0 | 0 | 0 | 0 | 0 | 0 |
| **220kV EQUIPMENT ITEMS:** | | | | | | | | | |
| 220kV Circuit Breaker, SF6, 40kA | 3 | ea. | | 1219 | 243 | 3658 | 729 | 1463 | 5850 |
| Breaker Disconnect Switch | 6 | ea. | | 213 | 47 | 1279 | 282 | 511 | 2072 |
| Line Disconnect Switch | 2 | ea. | | 269 | 58 | 539 | 116 | 215 | 870 |
| Surge Arrester | 6 | ea. | | 77 | 1 | 440 | 6 | 176 | 622 |
| Current Transformers | 9 | ea. | | 166 | 35 | 1496 | 315 | 598 | 2409 |
| Potential Transformers, with Carrier & Line Trap | 2 | ea. | 17400 | 273 | 54 | 546 | 108 | 218 | 872 |
| 220kV Buswork (Strain Type, Taps, Jumpers, Fittings) | 1 | Lot | | 360 | 71 | 360 | 71 | 147 | 574 |
| Civil Work: Foundations, Surfacing | 1 | Lot | 1089 | 16 | 85 | 16 | 85 | 6 | 107 |
| Relay and Control Work: Transf & Bus Protection | 1 | Lot | 82000 | 1287 | 414 | 1287 | 414 | 514 | 2215 |
| Misc. Conduit, Wiring, Grounding, Lighting | 1 | Lot | 266 | 4 | 36 | 4 | 36 | 1 | 41 |
| Subtotal (x 1,000 Rs) | | | | | | 9624 | 2162 | 3845 | 15631 |
| Contingency (Equipment & Duty Only) | 10 | % | | | | 962 | | 385 | 1347 |
| Inland Transport (Equipment Onl.) | 5 | % | | | | 529 | | | 529 |
| Import License (2%), Insurance (.5%), Clearance (.2%) | 2.7 | % | | | | 266 | | | 266 |
| Engineering, Administration, Audit & Inspection | 9 | % | | | | 1062 | 195 | 381 | 1602 |
| Interest During Construction | 17 | % | | | | 1616 | 306 | 599 | 2521 |
| SUBTOTAL THIS PAGE (x 1,000 Rs) | | | | | | 14043 | 2663 | 5210 | 21916 |

US$ 1396040

Rev:0, A, B
File:WAPDA-LA1

# SUBSTATION COST ESTIMATE



## Lakhra / Khanot 220kV Substation - Plan L1 (1990)

% Duty Rate: 40
Monetary Unit: Rs x1,000(JUNE'85)
Exch Rate (Rs/$)= 15.7
BY:TLHoke DATE:Mar 4, 1985
CHECKED:DShafer DATE:

| ITEM AND DESCRIPTION | Item QTY | Item UNIT | Foreign Exchange US$/Unit | Foreign Exchange Rs/Unit | Local Cost Rs/Unit | F.E.C. Totals | LOCAL COSTS Totals | DUTY COSTS Totals | TOTAL COSTS |
|---|---|---|---|---|---|---|---|---|---|
| **220kV EQUIPMENT ITEMS:** | | | | | | | | | |
| 333 MVA, 220/20kV GSU Transformer (w/Arresters) 1 Ph | 1 | ea. | 1300000 | 20410 | 4082 | 20410 | 4082 | 8164 | 32656 |
| 220kV Circuit Breaker, SF6, 40kA | 5 | ea. | | 1219 | 253 | 6097 | 1265 | 2436 | 9800 |
| Breaker Disconnect Switch | 11 | ea. | | 213 | 47 | 2345 | 517 | 937 | 3799 |
| Line Disconnect Switch | 3 | ea. | | 269 | 58 | 806 | 174 | 323 | 1305 |
| Surge Arrester | 6 | ea. | | 73 | 1 | 440 | 6 | 176 | 622 |
| Current Transformers | 15 | ea. | | 166 | 35 | 2493 | 525 | 997 | 4015 |
| Potential Transformers, with Carrier & Line Trap | 2 | ea. | 17400 | 273 | 54 | 546 | 108 | 218 | 872 |
| 220kV Buswork (Strain Type, Taps, Jumpers, Fittings) | 1 | Lot | | 276 | 55 | 276 | 55 | 110 | 441 |
| Civil Work: Foundations, Surfacing, Land & Earthwork | 1 | Lot | 1564 | 24 | 86 | 24 | 86 | 9 | 119 |
| Relay and Control Work: Transf & Bus Protection | 1 | Lot | 110000 | 1727 | 502 | 1727 | 502 | 690 | 2919 |
| Misc. Conduit, Wiring, Grounding, Lighting | 1 | Lot | 760 | 5 | 45 | 5 | 45 | 2 | 52 |
| Subtotal (x 1,000 Rs) | | | | | | 35170 | 7365 | 14064 | 56599 |
| Contingency (Equipment & Duty Only) | 10 | % | | | | 3517 | | 1406 | 4923 |
| Inland Transport (Equipment Only) | 5 | % | | | | 1934 | | | 1934 |
| Import License (2%), Insurance (.5%), Clearance (.2%) | 2.7 | % | | | | 1045 | | | 1045 |
| Engineering, Administration, Audit & Inspection | 9 | % | | | | 3750 | 663 | 1392 | 5805 |
| Interest During Construction | 12 | % | | | | 5904 | 1044 | 2192 | 8140 |
| SUBTOTAL THIS PAGE (x 1,000 Rs) | | | | | | 51320 | 9072 | 19054 | 79446 |
| SUBTOTAL 1990 PLAN L1 (x 1,000 Rs) | | | | | | 65363 | 11735 | 24264 | 101362 |

Rev:0, A, B
File:WAPDA[redacted]K1

UEI 645-000

# SUBSTATION COST ESTIMATE



## Jamshoro 550/220kV Substation - Plan L1 (1992)

% Duty Rate: 40 BY:TLHoke DATE:Mar 4, 1985

Monetary Unit: Rs x1,000(JUNE'85) Exch Rate (Rs/$)= 15.7 CHECKED:DShafer DATE:

| ITEM AND DESCRIPTION | Item QTY | UNIT | Foreign Exchange US$/Unit | Rs/Unit | Local Cost Rs/Unit | F.E.C. Total | LOCAL COSTS Totals | DUTY COSTS Totals | TOTAL COSTS |
|---|---|---|---|---|---|---|---|---|---|
| **550kV EQUIPMENT ITEMS:** | | | | | | | | | |
| 3x150MVA,550/220kV Autotransf (w/Tert & Arresters) | 1 | ea. | | 24941 | 4988 | 24941 | 4988 | 9976 | 39905 |
| 550kV Circuit Breaker, SF6, 40kA | 2 | ea. | | 2482 | 696 | 6963 | 1392 | 2785 | 11140 |
| Breaker Disconnect Switch | 4 | ea. | | 900 | 179 | 3598 | 716 | 1439 | 5753 |
| Line Disconnect Switch | 1 | ea. | | 1089 | 217 | 1089 | 217 | 435 | 1741 |
| Surge Arrester | 0 | ea. | | 189 | 37 | 0 | 0 | 0 | 0 |
| Current Transformers | 6 | ea. | | 610 | 121 | 3658 | 726 | 1463 | 5847 |
| Potential Transformers, with Carrier & Line Trap | 0 | ea. | | 531 | 106 | 0 | 0 | 0 | 0 |
| 550kV Buswork (Strain Type, Taps, Jumpers, Fittings) | 1 | Lot | | 273 | 54 | 273 | 54 | 109 | 436 |
| Civil Work: Foundations, Surfacing | 1 | Lot | 950 | 15 | 545 | 15 | 545 | 6 | 566 |
| Relay and Control Work: Transf & Bus Protection | 1 | Lot | 51000 | 800 | 239 | 800 | 239 | 320 | 1359 |
| Misc. Conduit, Wiring, Grounding, Lighting | 1 | Lot | 690 | 10 | 90 | 10 | 90 | 4 | 104 |
| **220kV EQUIPMENT ITEMS:** | | | | | | | | | |
| 333 MVA, 220/220kV 65U Transformer (w/Arresters) 1 Ph | 0 | ea. | 1700000 | 26410 | 4062 | 0 | 0 | 0 | 0 |
| 220kV Circuit Breaker, SF6, 40kA | 4 | ea. | | 1219 | 253 | 4877 | 1012 | 1950 | 7839 |
| Breaker Disconnect Switch | 8 | ea. | | 217 | 47 | 1705 | 376 | 682 | 2763 |
| Line Disconnect Switch | 3 | ea. | | 265 | 58 | 808 | 174 | 323 | 1305 |
| Surge Arrester | 6 | ea. | | 77 | 1 | 440 | 6 | 176 | 622 |
| Current Transformers | 12 | ea. | | 166 | 35 | 1994 | 420 | 797 | 3211 |
| Potential Transformers, with Carrier & Line Trap | 2 | ea. | 17400 | 273 | 54 | 546 | 108 | 218 | 872 |
| 220kV Buswork (Strain Type, Taps, Jumpers, Fittings) | 1 | Lot | | 209 | 41 | 209 | 41 | 83 | 333 |
| Civil Work: Foundations, Surfacing | 1 | Lot | 576 | 9 | 93 | 9 | 93 | 3 | 105 |
| Relay and Control Work: Transf & Bus Protection | 1 | Lot | 110000 | 1727 | 502 | 1727 | 502 | 690 | 2919 |
| Misc. Conduit, Wiring, Grounding, Lighting | 1 | Lot | 360 | 5 | 45 | 5 | 45 | 2 | 52 |
| Subtotal (x 1,000 Rs) | | | | | | 53667 | 11734 | 21461 | 86862 |
| Contingency (Equipment & Duty Only) | 10 | % | | | | 5367 | | 2146 | 7513 |
| Inland Transport (Equipment Only) | 5 | % | | | | 2683 | | | 2683 |
| Import License (2%), Insurance (.5%), Clearance (.2%) | 2.7 | % | | | | 1584 | | | 1584 |
| Engineering, Administration, Audit & Inspection | 9 | % | | | | 5700 | 1056 | 2125 | 8903 |
| Interest During Construction | 17 | % | | | | 9069 | 1663 | 3345 | 14017 |
| SUBTOTAL THIS PAGE (x 1,000 Rs) | | | | | | 78311 | 14453 | 29077 | 121841 |

US$ 7761000

Rev:0, A, B
File:WAPDA-LAP2

# SUBSTATION COST ESTIMATE



## Lakhra / Khanot 220kV Substation - Plan L1 (1992)

% Duty Rate: 40
Monetary Unit: Rs x1,000(JUNE'85)
Exch Rate (Rs/$)= 15.7
BY:TLHoke DATE:Mar 4, 1985
CHECKED:DShafer DATE:

| ITEM AND DESCRIPTION | Item QTY | Item UNIT | Foreign Exchange US$/Unit | Foreign Exchange Rs/Unit | Local Cost Rs/Unit | F.E.C. Totals | LOCAL COSTS Totals | DUTY COSTS Totals | TOTAL COSTS |
|---|---|---|---|---|---|---|---|---|---|
| 220kV EQUIPMENT ITEMS: | | | | | | | | | |
| 333 MVA, 220/20kV GSU Transformer (w/Arresters) 1 Ph | 2 | ea. | 170000 | 20410 | 4082 | 40820 | 8164 | 16328 | 65312 |
| 220kV Circuit Breaker, SF6, 40kA | 6 | ea. | | 1219 | 253 | 7316 | 1518 | 2926 | 11760 |
| Breaker Disconnect Switch | 12 | ea. | | 213 | 47 | 2558 | 564 | 1027 | 4145 |
| Line Disconnect Switch | 4 | ea. | | 269 | 58 | 1077 | 232 | 430 | 1739 |
| Surge Arrester | 6 | ea. | | 73 | 1 | 440 | 6 | 176 | 622 |
| Current Transformers | 18 | ea. | | 166 | 35 | 2991 | 630 | 1196 | 4817 |
| Potential Transformers, with Carrier & Line Trap | 2 | ea. | 17400 | 273 | 54 | 546 | 108 | 218 | 872 |
| 220kV Buswork (Strain Type, Taps, Jumpers, Fittings) | 1 | Lot | | 276 | 55 | 276 | 55 | 110 | 441 |
| Civil Work: Foundations, Surfacing, Land & Earthwork | 1 | Lot | 1584 | 24 | 86 | 24 | 86 | 9 | 119 |
| Relay and Control Work: Transf & Bus Protection | 1 | Lot | 116000 | 1727 | 502 | 1727 | 502 | 690 | 2919 |
| Misc. Conduit, Wiring, Grounding, Lighting | 1 | Lot | 260 | 5 | 45 | 5 | 45 | 2 | 52 |
| Subtotal (x 1,000 Rs) | | | | | | 57780 | 11910 | 23108 | 92798 |
| Contingency (Equipment & Duty Only) | 10 | % | | | | 5778 | | 2311 | 8089 |
| Inland Transport (Equipment Only) | 5 | % | | | | 3178 | | | 3178 |
| Import License (2%), Insurance (.5%), Clearance (.2%) | 2.7 | % | | | | 1716 | | | 1716 |
| Engineering, Administration, Audit & Inspection | 9 | % | | | | 5161 | 1072 | 2066 | 8301 |
| Interest During Construction | 17 | % | | | | 9766 | 1688 | 3840 | 14950 |
| SUBTOTAL THIS PAGE (x 1,000 Rs) | | | | | | 84313 | 14670 | 31309 | 130292 |
| SUBTOTAL 1992 PLAN L1 (x 1,000 Rs) | | | | | | 162624 | 29123 | 60386 | 252133 |

US$ 16055000

Rev:0, A, B
File:WAPDA-LAK2

# SUBSTATION COST ESTIMATE



## Jamshoro 550/220kV Substation - Plan L2 (1990)

% Duty Rate: 40 BY:TLHoke DATE:Mar 4, 1985

Monetary Unit: Rs x1,000(JUNE'85) Exch Rate (Rs/$)= 15.7 CHECKED:DShafer DATE:

| ITEM AND DESCRIPTION | Item QTY | Item UNIT | Foreign Exchange US$/Unit | Foreign Exchange Rs/Unit | Local Cost Rs/Unit | F.E.C. Totals | LOCAL COSTS Totals | DUTY COSTS Totals | TOTAL COSTS |
|---|---|---|---|---|---|---|---|---|---|
| **550kV EQUIPMENT ITEMS:** | | | | | | | | | |
| 3x150MVA,550/220kV Autotransf (w/Tert & Arresters) | 0 | ea. | | 24941 | 4988 | 0 | 0 | 0 | 0 |
| 1x37MVAR, 500kV Reactor, 1Phase | 0 | ea. | | 4299 | 859 | 0 | 0 | 0 | 0 |
| 550kV Circuit Breaker, SF6, 40kA | 0 | ea. | | 3482 | 696 | 0 | 0 | 0 | 0 |
| Breaker Disconnect Switch | 0 | ea. | | 900 | 179 | 0 | 0 | 0 | 0 |
| Line Disconnect Switch | 0 | ea. | | 1089 | 217 | 0 | 0 | 0 | 0 |
| Surge Arrester | 0 | ea. | | 189 | 37 | 0 | 0 | 0 | 0 |
| Current Transformers | 0 | ea. | | 610 | 121 | 0 | 0 | 0 | 0 |
| Potential Transformers, with Carrier & Line Trap | 0 | ea. | | 531 | 106 | 0 | 0 | 0 | 0 |
| 550kV Buswork (Strain Type, Taps, Jumpers, Fittings) | 0 | Lot | | 0 | 0 | 0 | 0 | 0 | 0 |
| Civil Work: Foundations, Surfacing | 0 | Lot | 0 | 0 | 0 | 0 | 0 | 0 | 0 |
| Relay and Control Work: Transf & Bus Protection | 0 | Lot | 0 | 0 | 0 | 0 | 0 | 0 | 0 |
| Misc. Conduit, Wiring, Grounding, Lighting | 0 | Lot | 0 | 0 | 0 | 0 | 0 | 0 | 0 |
| **220kV EQUIPMENT ITEMS:** | | | | | | | | | |
| 333 MVA, 220/200kV 60Hz Transformer (w/Arresters) 1 Ph | 0 | ea. | 1300000 | 20410 | 4082 | 0 | 0 | 0 | 0 |
| 220kV Circuit Breaker, SF6, 40kA | 0 | ea. | | 1269 | 253 | 0 | 0 | 0 | 0 |
| Breaker Disconnect Switch | 0 | ea. | | 213 | 43 | 0 | 0 | 0 | 0 |
| Line Disconnect Switch | 0 | ea. | | 289 | 58 | 0 | 0 | 0 | 0 |
| Surge Arrester | 0 | ea. | | 86 | 1 | 0 | 0 | 0 | 0 |
| Current Transformers | 0 | ea. | | 186 | 35 | 0 | 0 | 0 | 0 |
| Potential Transformers, with Carrier & Line Trap | 0 | ea. | 17400 | 273 | 54 | 0 | 0 | 0 | 0 |
| 220kV Buswork (Strain Type, Taps, Jumpers, Fittings) | 0 | Lot | | 0 | 0 | 0 | 0 | 0 | 0 |
| Civil Work: Foundations, Surfacing | 0 | Lot | 0 | 0 | 0 | 0 | 0 | 0 | 0 |
| Relay and Control Work: Transf & Bus Protection | 0 | Lot | 0 | 0 | 0 | 0 | 0 | 0 | 0 |
| Misc. Conduit, Wiring, Grounding, Lighting | 0 | Lot | 0 | 0 | 0 | 0 | 0 | 0 | 0 |
| Subtotal (x 1,000 Rs) | | | | | | 0 | 0 | 0 | 0 |
| Contingency (Equipment & Cut. Gal.) | 10 | % | | | | 0 | | 0 | 0 |
| Inland Transport (Equipment Only) | 5 | % | | | | 0 | | | 0 |
| Import License (2%), Insurance (.5%), Clearance (.3%) | 2.7 | % | | | | 0 | | | 0 |
| Engineering, Administration, Audit & Inspection | 5 | % | | | | 0 | 0 | 0 | |
| Interest During Construction | 12 | % | | | | 0 | 0 | 0 | 0 |
| SUBTOTAL THIS PAGE (x 1,000 Rs) | | | | | | 0 | 0 | 0 | 0 |

Rev:0, A

File:WAPDA-LAN3

USE 0

# SUBSTATION COST ESTIMATE



## Lakhra 500kV Substation - Plan L2 (1990)

% Duty Rate: 40
Monetary Unit: Rs x1,000(JUNE'85)
Exch Rate (Rs/$)= 15.7

BY:TLHoke
CHECKED:DShafer

DATE:Mar 4, 1985
DATE:

| ITEM AND DESCRIPTION | QTY | UNIT | Foreign Exchange US$/Unit | Foreign Exchange Rs/Unit | Local Cost Rs/Unit | F.E.C. Totals | LOCAL COSTS Totals | DUTY COSTS Totals | TOTAL COSTS |
|---|---|---|---|---|---|---|---|---|---|
| **500kV EQUIPMENT ITEMS:** | | | | | | | | | |
| 3x111MVA,500/20kV Gen Stepup (w/Arresters), 1Ph/Tank | 1 | ea. | 1500000 | 23550 | 4710 | 23550 | 4710 | 9420 | 37680 |
| 550kV Circuit Breaker, SF6, 40kA | 5 | ea. | | 3482 | 796 | 17408 | 3980 | 6367 | 27755 |
| Breaker Disconnect Switch | 11 | ea. | | 500 | 184 | 5496 | 2024 | 3558 | 13078 |
| Line Disconnect Switch | 3 | ea. | | 1069 | 222 | 3206 | 666 | 1746 | 5618 |
| Surge Arrester | 6 | ea. | | 244 | 48 | 1465 | 288 | 5 | 2758 |
| Current Transformers | 15 | ea. | | 610 | 123 | 9145 | 1845 | 3657 | 14647 |
| Potential Transformers, with Carrier & Line Trap | 2 | ea. | | 531 | 106 | 1061 | 212 | 424 | 1697 |
| 550kV Busbar (Strain Type, Taps, Jumpers, Fittings) | 1 | Lot | | 467 | 97 | 467 | 97 | 194 | 758 |
| Civil Work: Foundations, Surfacing, Land & Earthwork | 1 | Lot | 7024 | 47 | 91 | 47 | 91 | 18 | 156 |
| Relay and Control Work: Transf & Bus Protection | 1 | Lot | 100000 | 1570 | 471 | 1570 | 471 | 628 | 2669 |
| Misc. Conduit, Wiring, Grounding, Lighting | 1 | Lot | 760 | 5 | 45 | 5 | 45 | 2 | 52 |
| Subtotal (x 1,000 Rs) | | | | | | 67899 | 13979 | 27155 | 109033 |
| Contingency (Equipment & Duty Only) | 10 | % | | | | 6790 | | 2716 | 9506 |
| Inland Transport (Equipment Only) | 5 | % | | | | 3394 | | | 3394 |
| Import License (2%), Insurance (.5%), Clearance (.2%) | 2.7 | % | | | | 2017 | | | 2017 |
| Engineering, Administration, Audit & Inspection | 9 | % | | | | 7340 | 1258 | 2688 | 11286 |
| Interest During Construction | 12 | % | | | | 11355 | 1981 | 4377 | 17713 |
| SUBTOTAL THIS PAGE (x 1,000 Rs) | | | | | | 99078 | 17218 | 36792 | 153088 |
| SUBTOTAL 1990 PLAN L2 (x 1,000 Rs) | | | | | | 99078 | 17218 | 36792 | 153088 |

Rev:0, A
File:WAPD4-LAK3

# SUBSTATION COST ESTIMATE



## Jamshoro 550/220kV Substation - Plan L2 (1992)

% Duty Rate: 40

Monetary Unit: Rs x1,000(JUNE,85) Exch Rate (Rs/$)= 15.7

BY:TLHoke DATE:Mar 4, 1985

CHECKED:DShafer DATE:

| ITEM AND DESCRIPTION | Item QTY | Item UNIT | Foreign Exchange US$/Unit | Foreign Exchange Rs/Unit | Local Cost Rs/Unit | F.E.C. Totals | LOCAL COSTS Totals | DUTY COSTS Totals | TOTAL COSTS |
|---|---|---|---|---|---|---|---|---|---|
| **550kV EQUIPMENT ITEMS:** | | | | | | | | | |
| 3x150MVA,550/220kV Autotransf (w/Tert & Arresters) | 1 | ea. | | 24541 | 4999 | 24541 | 4999 | 8672 | 38209 |
| 550kV Circuit Breaker, SF6, 4000 | 2 | ea. | | 7482 | 696 | 6967 | 1392 | 2385 | 11146 |
| Breaker Disconnect Switch | 4 | ea. | | 560 | 179 | 2232 | 716 | 1479 | 4427 |
| Line Disconnect Switch | 1 | ea. | | 1089 | 217 | 1089 | 217 | 435 | 1741 |
| Surge Arrester | 0 | ea. | | 244 | 48 | 0 | 0 | 0 | 0 |
| Current Transformers | 6 | ea. | | 610 | 121 | 3658 | 726 | 1467 | 5847 |
| Potential Transformers, with Carrier & Line Trap | 0 | ea. | | 531 | 106 | 0 | 0 | 0 | 0 |
| 550kV Buswork (Strain Type, Taps, Jumpers, Fittings) | 1 | Lot | | 172 | 34 | 172 | 34 | 69 | 275 |
| Civil Work: Foundations, Surfacing | 1 | | 1000 | 16 | 545 | 16 | 545 | 0 | 561 |
| Relay and Control Work: Transf & Bus Protection | 1 | Lot | 50000 | 785 | 276 | 785 | 276 | 314 | 1375 |
| Misc. Conduit, Wiring, Grounding, Lighting | 1 | Lot | 1200 | 21 | 189 | 21 | 189 | 6 | 216 |
| **220kV EQUIPMENT ITEMS:** | | | | | | | | | |
| 220kV Circuit Breaker, SF6, 4000 | 1 | ea. | | 1219 | 253 | 1219 | 253 | 487 | 1959 |
| Breaker Disconnect Switch | 1 | ea. | | 217 | 47 | 217 | 47 | 85 | 349 |
| Line Disconnect Switch | 1 | ea. | | 269 | 56 | 269 | 56 | 107 | 432 |
| Surge Arrester | 0 | ea. | | 72 | 1 | 0 | 0 | 0 | 0 |
| Current Transformers | 3 | ea. | | 166 | 35 | 499 | 105 | 199 | 803 |
| Potential Transformers, with Carrier & Line Trap | 0 | ea. | 1740 | 272 | 54 | 0 | 0 | 0 | 0 |
| 220kV Buswork (Strain Type, Taps, Jumpers, Fittings) | 1 | Lot | | 47 | 9 | 47 | 9 | 18 | 74 |
| Civil Work: Foundations, Surfacing | 1 | Lot | 144 | 2 | 82 | 2 | 82 | 1 | 84 |
| Relay and Control Work: Transf & Bus Protection | 1 | Lot | 5000 | 947 | 745 | 947 | 745 | 379 | 1691 |
| Misc. Conduit, Wiring, Grounding, Lighting | 1 | Lot | 50 | 1 | 9 | 1 | 9 | 0 | 10 |
| Subtotal (x 1,000 Rs) | | | | | | 44437 | 9951 | 17767 | 72155 |
| Contingency (Equipment & Duty Cost) | 1 % | | | | | 444 | | 177 | 621 |
| Inland Transport (Equipment Cost) | 5 % | | | | | 2222 | | | 2222 |
| Import License (2%), Insurance (.5%), Clearance (.5%) | 3 % | | | | | 1333 | | | 1333 |
| Engineering, Administration, Audit & Inspection | 5 % | | | | | 2222 | 498 | 888 | 3110 |
| Interest During Construction | 17 % | | | | | 7554 | 1694 | 3019 | 12267 |
| SUBTOTAL THIS PAGE (x 1,000 Rs) | | | | | | 64843 | 12257 | 24072 | 101172 |

Rev:0, A

File:WAPDA-LA14

USD 6444000

# SUBSTATION COST ESTIMATE



## Lakhra / Khanot 500kV Substation - 1992)

% Duty Rate: 40 BY:TLHoke DATE:Mar 4, 1985

Monetary Unit: Rs x1,000(JUNE'85) Exch Rate (Rs/$)= 15.7 CHECKED:DShafer DATE:

| ITEM AND DESCRIPTION | Item QTY | Item UNIT | Foreign Exchange US$/Unit | Foreign Exchange Rs/Unit | Local Cost Rs/Unit | F.E.C. Totals | LOCAL COSTS Totals | DUTY COSTS Totals | TOTAL COSTS |
|---|---|---|---|---|---|---|---|---|---|
| **500kV EQUIPMENT ITEMS:** | | | | | | | | | |
| 3x111MVA,500/201V Gen Stepup (w/Arresters), 1Ph/Tank | 2 | ea. | 150000 | 23550 | 4710 | 47100 | 9420 | 18840 | 75360 |
| 550kV Circuit Breaker, SF6, 40kA | 2 | ea. | | 3482 | 696 | 10445 | 2118 | 4177 | 16740 |
| Breaker Disconnect Switch | 6 | ea. | | 900 | 184 | 5799 | 1104 | 2159 | 8861 |
| Line Disconnect Switch | 2 | ea. | | 1089 | 222 | 2177 | 444 | 870 | 3491 |
| Surge Arrester | 0 | ea. | | 244 | 48 | 0 | 0 | 0 | 0 |
| Current Transformers | 9 | ea. | | 610 | 123 | 5487 | 1107 | 2194 | 8788 |
| Potential Transformers, with Carrier & Line Trap | 0 | ea. | | 571 | 104 | 0 | 0 | 0 | 0 |
| 550kV Buswork (Strain Type, Taps, Jumpers, Fittings) | 1 | Lot | | 243 | 49 | 243 | 49 | 97 | 389 |
| Civil Work: Foundations, Surfacing, Land & Earthwork | 1 | Lot | 1296 | 20 | 86 | 20 | 86 | 8 | 114 |
| Relay and Control Work: Transf & Bus Protection | 1 | Lot | 80000 | 1256 | 406 | 1256 | 406 | 502 | 2164 |
| Misc. Conduit, Wiring, Grounding, Lighting | 1 | Lot | 369 | 5 | 45 | 5 | 45 | 2 | 52 |
| Subtotal (x 1,000 Rs) | | | | | | 72130 | 14780 | 28849 | 115759 |
| Contingency (Equipment & Duty Only) | 10 | % | | | | 7213 | | 2885 | 10098 |
| Inland Transport (Equipment Only) | 5 | % | | | | 3607 | | | 3607 |
| Import License (2%), Insurance (.5%), Clearance (.2%) | 2.7 | % | | | | 2142 | | | 2142 |
| Engineering, Administration, Audit & Inspection | 9 | % | | | | 7491 | 1330 | 2996 | 11817 |
| Interest During Construction | 17 | % | | | | 12109 | 2094 | 4837 | 19040 |
| SUBTOTAL THIS PAGE (x 1,000 Rs) | | | | | | 105252 | 18204 | 39087 | 162543 |
| SUBTOTAL 1992 PLAN L2 (x 1,000 Rs) | | | | | | 170095 | 30461 | 63159 | 263715 |

US$ 16797000

Rev:0, A
File:WAPDA-L2V3

SUBSTATION COST ESTIMATE



Lakhra / Khanot 500kV Substation - 500/132 kV Tie

% Duty Rate: 40 BY: BCWhite DATE: Dec 10, 1985

Monetarry Unit: Rs x1,000(JUNE'85) Exch Rate (Rs/$)= 15.7 CHECKED: DShafer DATE:

| ITEM AND DESCRIPTION | QTY | Item UNIT | Foreign US$/Unit | Exchange Rs/Unit | Local Cost Rs/Unit | F.E.C. Totals | LOCAL COSTS Totals | DUTY COSTS Totals | TOTAL COSTS |
|---|---|---|---|---|---|---|---|---|---|
| 500kV EQUIPMENT ITEMS: | | | | | | | | | |
| 4x 30MVA, 500/132 - 6.9kV Autotransf (w/tert & arrest) | 1 | ea. | 1,244,000 | 19,530 | 3,906 | 19,530 | 3,906 | 7,812 | 31,248 |
| 550kV Circuit Breaker, SF6, 40kA | 2 | ea. | | 3,482 | 696 | 6,964 | 1,392 | 2,785 | 11,141 |
| Breaker Disconnect Switch | 7 | ea. | | 900 | 180 | 6,300 | 1,260 | 2,520 | 10,080 |
| Line & Transformer Disconnect Switches | 2 | ea. | | 1,089 | 217 | 2,178 | 434 | 871 | 3,483 |
| Surge Arrester | 3 | ea. | | 244 | 48 | 732 | 144 | 292 | 1,168 |
| Current Transformers | 6 | ea. | | 610 | 122 | 3,660 | 732 | 1,464 | 5,856 |
| Potential Transformers, with Carrier & Line Trap | 1 | ea. | | 531 | 106 | 531 | 106 | 212 | 849 |
| 550kV Buswork (Strain Type, Taps, Jumpers, Fittings) | 1 | Lot | | 243 | 48 | 243 | 48 | 97 | 388 |
| Civil Work: Foundations, Surfacing | 1 | Lot | 900 | 14 | 35 | 14 | 35 | 5 | 54 |
| Relay and Control Work: Transf & Bus Protection | 1 | Lot | 52,000 | 816 | 163 | 816 | 163 | 326 | 1,305 |
| Misc. Conduit, Wiring, Grounding, Lighting | 1 | Lot | 288 | 4 | 36 | 4 | 36 | 1 | 41 |
| 132kV EQUIPMENT ITEMS: | | | | | | | | | |
| 132kV Circuit Breaker, SF6, 31.5kA | 3 | ea. | | 386 | 87 | 1,158 | 261 | 463 | 1,882 |
| Breaker Disconnect Switch | 6 | ea. | | 59 | 16 | 354 | 96 | 141 | 591 |
| Line Disconnect Switch | 2 | ea. | | 72 | 19 | 144 | 38 | 57 | 239 |
| Surge Arrester | 9 | ea. | | 26 | 5 | 234 | 45 | 93 | 372 |
| Current Transformers | 9 | ea. | | 38 | 9 | 342 | 81 | 136 | 559 |
| Potential Transformer | 9 | ea. | | 38 | 7 | 342 | 63 | 136 | 541 |
| 132kV Buswork (Strain Type, Taps, Jumpers, Fittings) | 1 | Lot | 52,000 | 118 | 23 | 118 | 23 | 47 | 188 |
| Civil Work: Foundations, Surfacing | 1 | Lot | 945 | 15 | 35 | 15 | 35 | 6 | 56 |
| Relay and Control Work: Transf & Bus Protection | 1 | Lot | 61,000 | 958 | 191 | 958 | 191 | 383 | 1,532 |
| Misc. Conduit, Wiring, Grounding, Lighting | 1 | Lot | 210 | 3 | 27 | 3 | 27 | 1 | 31 |
| Subtotal (x 1,000 Rs) | | | | | | 44,640 | 9,116 | 17,848 | 71,604 |
| Contingency (Equipment & Duty Only) | 10 | % | | | | 4,464 | | 1,785 | 6,249 |
| Inland Transport (Equipment Only) | 5 | % | | | | 2,455 | | | 2,455 |
| Import License (2%), Insurance (.5%), Clearance (.2%) | 2.7 | % | | | | 1,326 | | | 1,326 |
| Engineering, Administration, Audit & Inspection | 9 | % | | | | 4,760 | 820 | 1,767 | 7,347 |
| Interest During Construction | 13 | % | | | | 7,494 | 1,292 | 2,782 | 11,568 |
| SUBTOTAL THIS PAGE (x 1,000 Rs) | | | | | | 65,139 | 11,228 | 24,182 | 100,549 |
| | | | | | | | | | US$ 6,404,000 |

Rev:0, A
File: WAPDA-LAK3

SUBSTATION COST ESTIMATE



Lakhra / Khanot 500kV Substation - First 350 Mw Unit

% Duty Rate: 40 BY: BCWhite DATE: Dec 10, 1985

Monetary Unit Rs x1,000(JUNE'85) Exch Rate (Rs/$)= 15.7 CHECKED: DShafer DATE:

| ITEM AND DESCRIPTION | QTY | Item UNIT | Foreign Exchange US$/Unit | Foreign Exchange Rs/Unit | Local Cost Rs/Unit | F.E.C. Totals | LOCAL COST Totals | DUTY COSTS Totals | TOTAL COSTS |
|---|---|---|---|---|---|---|---|---|---|
| 500kV EQUIPMENT ITEMS: | | | | | | | | | |
| 3x145MVA,500/20kV Gen Stepup (w/Arresters), 1Ph/Tank | 1 | ea. | 1,750,000 | 27,475 | 5,495 | 27,475 | 5,495 | 10,990 | 43,960 |
| 550kV Circuit Breaker, SF6, 40kA | 6 | ea. | | 3,482 | 706 | 20,889 | 4,236 | 8,355 | 33,480 |
| Breaker Disconnect Switch | 10 | ea. | | 900 | 184 | 8,996 | 1,840 | 3,598 | 14,434 |
| Line & Transformer Disconnect Switches | 3 | ea. | | 1,089 | 222 | 3,266 | 666 | 1,306 | 5,238 |
| Surge Arrester | 3 | ea. | | 244 | 48 | 732 | 144 | 292 | 1,168 |
| Current Transformers | 15 | ea. | | 610 | 123 | 9,145 | 1,845 | 3,657 | 14,647 |
| Potential Transformers, with Carrier & Line Trap | 1 | ea. | | 531 | 106 | 531 | 106 | 212 | 849 |
| 550kV Buswork (Strain Type, Taps, Jumpers, Fittings) | 1 | Lot | | 487 | 97 | 487 | 97 | 194 | 778 |
| Civil Work: Foundations, Surfacing, Land & Earthwork | 1 | Lot | 3,024 | 47 | 91 | 47 | 91 | 18 | 156 |
| Relay and Control Work: Transf & Bus Protection | 1 | Lot | 110,000 | 1,727 | 471 | 1,727 | 471 | 690 | 2,888 |
| Misc. Conduit, Wiring, Grounding, Lighting | 1 | Lot | 432 | 6 | 54 | 6 | 54 | 2 | 62 |
| 4x30MVA,500/6.9kV Aux Power (w/Arresters), 1Ph/Tank | 1 | ea. | 776,000 | 12,183 | 2,436 | 12,183 | 2,436 | 4,873 | 19,492 |
| Subtotal (x 1,000 Rs) | | | | | | 85,484 | 17,481 | 34,187 | 137,152 |
| Contingency (Equipment & Duty Only) | 10 | % | | | | 8,548 | | 3,419 | 11,967 |
| Inland Transport (Equipment Only) | 5 | % | | | | 4,702 | | | 4,702 |
| Import License (2%), Insurance (.5%), Clearance (.2%) | 2.7 | % | | | | 2,539 | | | 2,539 |
| Engineering, Administration, Audit & Inspection | 9 | % | | | | 9,115 | 1,573 | 3,385 | 14,073 |
| Interest During Construction | 13 | % | | | | 14,350 | 2,477 | 5,329 | 22,156 |
| SUBTOTAL THIS PAGE (x 1,000 Rs) | | | | | | 124,738 | 21,531 | 46,320 | 192,589 |

Rev:0, A

File: WAPDA-LAK3

US$ 12,267,000

SUBSTATION COST ESTIMATE

Lakhra / Khanot 500kV Substation - Second 350 Mw Unit



% Duty Rate: 40 BY: BCWhite DATE: Dec 10, 1985

Monetary Unit: Rs x1,000(JUNE'85) Exch Rate (Rs/$)= 15.7 CHECKED: DShafer DATE:

| ITEM AND DESCRIPTION | QTY | Item UNIT | Foreign Exchange US$/Unit | Foreign Exchange Rs/Unit | Local Cost Rs/Unit | F.E.C. Totals | LOCAL COST Totals | DUTY COSTS Totals | TOTAL COSTS |
|---|---|---|---|---|---|---|---|---|---|
| 500kV EQUIPMENT ITEMS: | | | | | | | | | |
| 3x145MVA,500/20kV Gen Stepup (w/Arresters), 1Ph/Tank | 1 | ea. | 1750000 | 27475 | 5495 | 27475 | 5495 | 10990 | 43960 |
| 550kV Circuit Breaker, SF6, 40kA | 1 | ea. | | 3482 | 706 | 3482 | 706 | 1392 | 5580 |
| Breaker Disconnect Switch | 1 | ea. | | 900 | 184 | 900 | 184 | 359 | 1443 |
| Line & Transformer Disconnect Switches | 1 | ea. | | 1089 | 222 | 1089 | 222 | 435 | 1746 |
| Surge Arrester | 0 | ea. | | 244 | 48 | 0 | 0 | 0 | 0 |
| Current Transformers | 6 | ea. | | 610 | 123 | 3658 | 738 | 1463 | 5859 |
| Potential Transformers, with Carrier & Line Trap | 0 | ea. | | 531 | 106 | 0 | 0 | 0 | 0 |
| 550kV Buswork (Strain Type, Taps, Jumpers, Fittings) | 1 | Lot | | 121 | 24 | 121 | 24 | 48 | 193 |
| Civil Work: Foundations, Surfacing, Land & Earthwork | 1 | Lot | 648 | 10 | 43 | 10 | 43 | 4 | 57 |
| Relay and Control Work: Transf & Bus Protection | 1 | Lot | 41000 | 643 | 204 | 643 | 204 | 257 | 1104 |
| Misc. Conduit, Wiring, Grounding, Lighting | 1 | Lot | 72 | 1 | 9 | 1 | 9 | 0 | 10 |
| Subtotal (x 1,000 Rs) | | | | | | 37378 | 7625 | 14948 | 59951 |
| Contingency (Equipment & Duty Only) | 10 | % | | | | 3738 | | 1495 | 5233 |
| Inland Transport (Equipment Only) | 5 | % | | | | 2056 | | | 2056 |
| Import License (2%), Insurance (.5%), Clearance (.2%) | 2.7 | % | | | | 1110 | | | 1110 |
| Engineering, Administration, Audit & Inspection | 9 | % | | | | 3985 | 686 | 1480 | 6151 |
| Interest During Construction | 13 | % | | | | 6275 | 1080 | 2330 | 9685 |
| SUBTOTAL THIS PAGE (x 1,000 Rs) | | | | | | 54542 | 9391 | 20253 | 84186 |

Rev:0, A

File: WAPDA-LAK4

US$ 5,362,190

# SUBSTATION COST ESTIMATE

## Imported Coal 220 kV Substation - Plan 1

% Duty Rate: 40 — BY:TLH/DFD — DATE:Aug 30, 1985

Monetary Unit: Rs x1,000(JUNE'85) — Exch Rate (Rs/$)= 15.7 — CHECKED:DShafer — DATE:

| ITEM AND DESCRIPTION | Item QTY | Item UNIT | Foreign Exchange US$/Unit | Foreign Exchange Rs/Unit | Local Cost Rs/Unit | F.E.C. Totals | LOCAL COSTS Totals | DUTY COSTS Totals | TOTAL COSTS |
|---|---|---|---|---|---|---|---|---|---|
| 220kV EQUIPMENT ITEMS: | | | | | | | | | |
| 333 MVA, 220 20kV 60Hz Transformer (w/Arresters)3-1Ph | 1 | ea. | [illegible] | [illegible] | [illegible] | [illegible] | [illegible] | [illegible] | [illegible] |
| 220kV Circuit Breaker, SF6, 4000A | 5 | ea. | | 1215 | 243 | [illegible] | 1215 | 2428 | [illegible] |
| Breaker Disconnect Switch | 11 | ea. | | 217 | 47 | [illegible] | 517 | [illegible] | [illegible] |
| Line Disconnect Switch | 3 | ea. | | [illegible] | 88 | [illegible] | [illegible] | [illegible] | [illegible] |
| Surge Arrester | 8 | ea. | | 22 | 1 | 440 | 6 | 176 | [illegible] |
| Current Transformers | 15 | ea. | | 166 | 35 | [illegible] | 525 | 667 | [illegible] |
| Potential Transformers, with Carrier & Line Trap | 2 | ea. | 17400 | [illegible] | 93 | [illegible] | [illegible] | [illegible] | [illegible] |
| 220kV Busworl (Strain Type, Tape, Jumpers, Fittings) | 1 | Lot | | 547 | 168 | 547 | [illegible] | 217 | [illegible] |
| Civil Work: Foundations, Surfacing, Land & Earthwork | 1 | Lot | 1710 | 26 | 87 | 26 | 87 | 10 | [illegible] |
| Relay and Control Work: Transf & Bus Protection | 1 | Lot | 110000 | 1727 | 500 | 1727 | 500 | 690 | [illegible] |
| Misc. Conduit, Wiring, Grounding, Lighting | 1 | Lot | 760 | 5 | 45 | 5 | 45 | 2 | 52 |
| SUBTOTAL IN 1000 Rs | | | | | | 35439 | 7369 | 14172 | 56980 |
| Contingency (Equipment & Duty Only) | 10 | % | | | | 3544 | | 1417 | 4961 |
| Inland Transport (Equipment Only) | 5 | % | | | | 1772 | | | 1772 |
| Import License (2%), Insurance (.5%), Clearance (.2%) | 2.7 | % | | | | 1057 | | | 1057 |
| Engineering, Administration, Audit & Inspection | 8 | % | | | | 2835 | 663 | 1417 | 5145 |
| Interest During Construction | 17 | % | | | | 5848 | 1044 | 2835 | [illegible] |
| TOTAL IN 1000 Rs | | | | | | 51713 | 9076 | 19201 | 79990 |

Rev:0
File:K4PDA-LAM1

US$ 5095000

# SUBSTATION COST ESTIMATE

## Imported Coal 220 kV Substation - Plan 2

% Duty Rate: 40 — BY:TLH/DFD — DATE:Aug 30, 1985

Monetary Unit: Rs x1,000(JUNE'85) — Exch Rate (Rs/$)= 15.7 — CHECKED:DShafer — DATE:

| ITEM AND DESCRIPTION | Item QTY | Item UNIT | Foreign Exchange US$/Unit | Foreign Exchange Rs/Unit | Local Cost Rs/Unit | F.E.C. Totals | LOCAL COSTS Totals | DUTY COSTS Totals | TOTAL COSTS |
|---|---|---|---|---|---|---|---|---|---|
| 220kV EQUIPMENT ITEMS: | | | | | | | | | |
| 666 MVA, 220/20kV 60Hz Transformer (w/Arresters)(3-1Ph) | 1 | ea. | | 7[illegible]15 | 6127 | 7[illegible]15 | 6127 | 12246 | 49564 |
| 220kV Circuit Breaker, SF6, 40kA | 6 | ea. | | 1215 | 247 | 7316 | 1482 | 2952 | 11700 |
| Breaker Disconnect Switch | 12 | ea. | | 217 | 47 | 2598 | 564 | 1127 | 4129 |
| Line Disconnect Switch | 4 | ea. | | 265 | 58 | 1077 | 232 | 470 | 1779 |
| Surge Arrester | 6 | ea. | | 72 | 1 | 430 | 9 | 264 | 703 |
| Current Transformers | 18 | ea. | | 166 | 35 | 2991 | 630 | 1195 | 4817 |
| Potential Transformers, with Carrier & Line Trap | 7 | ea. | 17400 | 273 | 54 | 819 | 162 | 327 | 1308 |
| 220kV Busbar (Strain Type, Taps, Jumpers, Fittings) | 1 | Lot | | 708 | 141 | 708 | 141 | 283 | 1132 |
| Civil Work: Foundations, Surfacing, Land & Earthwork | 1 | Lot | 2070 | 32 | 68 | 32 | 68 | 12 | 112 |
| Relay and Control Work: Transf & Bus Protection | 1 | Lot | 120000 | 1824 | 574 | 1824 | 574 | 757 | 3171 |
| Misc. Conduit, Wiring, Grounding, Lighting | 1 | Lot | 369 | 5 | 45 | 5 | 45 | 2 | 52 |
| SUBTOTAL IN 1000 Rs | | | | | | 48665 | 9986 | 19462 | 78113 |
| Contingency (Equipment & Duty Only) | 10 | % | | | | 4867 | | 1946 | 6813 |
| Inland Transport (Equipment Only) | 5 | % | | | | 2677 | | | 2677 |
| Import License (2%), Insurance (.5%), Clearance (.2%) | 2.7 | % | | | | 1445 | | | 1445 |
| Engineering, Administration, Audit & Inspection | 9 | % | | | | 5185 | 899 | 1907 | 8015 |
| Interest During Construction | 17 | % | | | | 9170 | 1415 | 3074 | 12619 |
| TOTAL IN 1000 Rs | | | | | | 71013 | 12300 | 26369 | 109682 |

Rev:0
File:WAPDA-LAM2

US$ 6982000

# SUBSTATION COST ESTIMATE

## Imported Coal 220 kV Substation - Plan 2A

% Duty Rate: 40 BY:TLH/DFD DATE:Aug 30, 1985

Monetary Unit: Rs x1,000(JUNE'85) Exch Rate (Rs/$)= 15.7 CHECKED:DShafer DATE:

| ITEM AND DESCRIPTION | Item QTY | Item UNIT | Foreign Exchange US$/Unit | Foreign Exchange Rs/Unit | Local Cost Rs/Unit | F.E.C. Totals | LOCAL COSTS Totals | DUTY COSTS Totals | TOTAL COSTS |
|---|---|---|---|---|---|---|---|---|---|
| 220kV EQUIPMENT ITEMS: | | | | | | | | | |
| 666 MVA, 220/20kV GSU Transformer (w/Arresters)3-1Ph | 1 | ea. | | 30615 | 6133 | 30615 | 6133 | 13248 | 49984 |
| 220kV Circuit Breaker, SF6, 40kA | 8 | ea. | | 1219 | 247 | 9755 | 1944 | 3901 | 15600 |
| Breaker Disconnect Switch | 16 | ea. | | 213 | 47 | 3410 | 752 | 1364 | 5526 |
| Line Disconnect Switch | 5 | ea. | | 269 | 58 | 1347 | 290 | 538 | 2175 |
| Surge Arres. | 15 | ea. | | 73 | 1 | 1100 | 15 | 440 | 1555 |
| Current Transformers | 24 | ea. | | 66 | 75 | 1585 | 640 | 1585 | 6437 |
| Potential Transformers, with Carrier & Line Trap | 4 | ea. | 17400 | 273 | 54 | 1092 | 216 | 436 | 1744 |
| 220kV Buswork (Strain Type, Taps, Jumpers, Fittings) | 1 | Lot | | 892 | 178 | 892 | 178 | 356 | 1426 |
| Civil Work: Foundations, Surfacing, Land & Earthwork | 1 | Lot | 2700 | 42 | 90 | 42 | 90 | 16 | 148 |
| Relay and Control Work: Trans' & Bus Protection | 1 | Lot | 140000 | 2276 | 612 | 2276 | 612 | 910 | 3798 |
| Misc. Conduit, Wiring, Grounding, Lighting | 1 | Lot | 900 | 14 | 126 | 14 | 126 | 5 | 145 |
| SUBTOTAL IN 1000 Rs | | | | | | 54530 | 11186 | 21807 | 87523 |
| Contingency (Equipment & Duty Only) | 10 | % | | | | 5453 | | 2181 | 7634 |
| Inland Transport (Equipment Only) | 5 | % | | | | 2939 | | | 2939 |
| Import License (2%), Insurance (.5%), Clearance (1.2%) | 3.7 | % | | | | 1630 | | | 1630 |
| Engineering, Administration, Audit & Inspection | 8 | % | | | | 5814 | 1007 | 2189 | 8950 |
| Interest During Construction | 17 | % | | | | 9184 | 1585 | 3369 | 14138 |
| TOTAL IN 1000 Rs | | | | | | 79570 | 13778 | 29546 | 122894 |

Rev:0
File:WAPD4-LAM3

US$ 7825000

# SUBSTATION COST ESTIMATE

## Imported Coal 220 kV Substation - Plan 3

% Duty Rate: 40 — BY:TLH/DFD — DATE:Aug 30, 1985

Monetary Unit: Rs x1,000(JUNE'85) — Exch Rate (Rs/$)= 15.7 — CHECKED:DShafer — DATE:

| ITEM AND DESCRIPTION | Item QTY | Item UNIT | Foreign Exchange US$/Unit | Foreign Exchange Rs/Unit | Local Cost Rs/Unit | F.E.C. Totals | LOCAL COSTS Totals | DUTY COSTS Totals | TOTAL COSTS |
|---|---|---|---|---|---|---|---|---|---|
| 220kV EQUIPMENT ITEMS: | | | | | | | | | |
| 666 MVA, 220/20kV GSU Transformer (w/Arresters)3-1Ph | 2 | ea. | | 30615 | 6123 | 61230 | 12246 | 24492 | 97968 |
| 220kV Circuit Breaker, SF6, 40kA | 9 | ea. | | 1219 | 243 | 10974 | 2187 | 4389 | 17550 |
| Breaker Disconnect Switch | 18 | ea. | | 213 | 47 | 3837 | 846 | 1524 | 6217 |
| Line Disconnect Switch | 6 | ea. | | 269 | 58 | 1616 | 348 | 646 | 2610 |
| Surge Arrester | 18 | ea. | | 77 | 1 | 1320 | 18 | 528 | 1866 |
| Current Transformers | 27 | ea. | | 166 | 35 | 4487 | 945 | 1794 | 7226 |
| Potential Transformers, with Carrier & Line Trap | 4 | ea. | 17400 | 273 | 54 | 1092 | 216 | 436 | 1744 |
| 220kV Buswork (Strain Type, Taps, Jumpers, Fittings) | 1 | Lot | | 1057 | 211 | 1057 | 211 | 422 | 1690 |
| Civil Work: Foundations, Surfacing, Land & Earthwork | 1 | Lot | 7060 | 48 | 91 | 48 | 91 | 19 | 158 |
| Relay and Control Work: Transf & Bus Protection | 1 | Lot | 175000 | 2747 | 706 | 2747 | 706 | 1098 | 4551 |
| Misc. Conduit, Wiring, Grounding, Lighting | 1 | Lot | 800 | 14 | 126 | 14 | 126 | 5 | 145 |
| SUBTOTAL IN 1000 Rs | | | | | | 88421 | 17940 | 35363 | 141724 |
| Contingency (Equipment & Duty Only) | 10 | % | | | | 8842 | | 3536 | 12378 |
| Inland Transport (Equipment Only) | 5 | % | | | | 4867 | | | 4867 |
| Import License (2%), Insurance (.5%), Clearance (.2%) | 2.7 | % | | | | 2626 | | | 2626 |
| Engineering, Administration, Audit & Inspection | 9 | % | | | | 8478 | 1615 | 3501 | 13594 |
| Interest During Construction | 17 | % | | | | 14247 | 2542 | 5512 | 22301 |
| TOTAL IN 1000 Rs | | | | | | 129023 | 22097 | 47912 | 199032 |

Rev:0

US$ 12677.00

# SUBSTATION COST ESTIMATE

## Imported Coal 500/220 kV Substation - Plan 4

% Duty Rate: 40 — BY:TLH/DFD — DATE:Aug 30, 1985

Monetary Unit: Rs x1,000(JUNE'85) — Exch Rate (Rs/$)= 15.7 — CHECKED:DShafer — DATE:

| ITEM AND DESCRIPTION | Item QTY | Item UNIT | Foreign Exchange US$/Unit | Foreign Exchange Rs/Unit | Local Cost Rs/Unit | F.E.C. Totals | LOCAL COSTS Totals | DUTY COSTS Totals | TOTAL COSTS |
|---|---|---|---|---|---|---|---|---|---|
| **550kV EQUIPMENT ITEMS:** | | | | | | | | | |
| 666MVA,550/220kV Transf, 3-1Ph | 2 | ea. | | 35325 | 7065 | 70650 | 14130 | 28260 | 113040 |
| 500kV Shunt Reactor,3-1Ph,22 MVA | 2 | ea. | | 9925 | 1985 | 19851 | 3970 | 7940 | 31761 |
| 3x150MVA,550/220kV Autotransf (w/Tert & Arresters) | 1 | ea. | | 24941 | 4988 | 24941 | 4988 | 9976 | 39905 |
| 550kV Circuit Breaker, SF6, 4000A | 8 | ea. | | 3482 | 696 | 27856 | 5568 | 11140 | 44560 |
| Breaker Disconnect Switch | 16 | ea. | | 900 | 179 | 14354 | 2864 | 5727 | 22945 |
| Line Disconnect Switch | 5 | ea. | | 1089 | 217 | 5447 | 1085 | 2177 | 8705 |
| Surge Arrester | 6 | ea. | | 189 | 37 | 1135 | 222 | 453 | 1810 |
| Current Transformers | 24 | ea. | | 610 | 121 | 14632 | 2904 | 5812 | 23388 |
| Potential Transformers, with Carrier & Line Trap | 2 | ea. | | 531 | 106 | 1061 | 212 | 424 | 1697 |
| 550kV Buswork (Strain Type, Taps, Jumpers, Fittings) | 1 | Lot | | 537 | 107 | 537 | 107 | 214 | 858 |
| Civil Work: Foundations, Surfacing | 1 | Lot | 1800 | 28 | 0 | 28 | 0 | 11 | 39 |
| Relay and Control Work: Transf & Bus Protection | 1 | Lot | 170000 | 2041 | 0 | 2041 | 0 | 816 | 2857 |
| Misc. Conduit, Wiring, Grounding, Lighting | 1 | Lot | 11500 | 180 | 1620 | 180 | 1620 | 72 | 1872 |
| **220kV EQUIPMENT ITEMS:** | | | | | | | | | |
| 220kV Circuit Breaker, SF6, 4000A | 5 | ea. | | 1219 | 243 | 6097 | 1215 | 2438 | 9750 |
| Breaker Disconnect Switch | 10 | ea. | | 217 | 47 | 2172 | 470 | 868 | 3454 |
| Line Disconnect Switch | 3 | ea. | | 269 | 58 | 808 | 174 | 323 | 1305 |
| Surge Arrester | 6 | ea. | | 72 | 1 | 440 | 6 | 176 | 622 |
| Current Transformers | 15 | ea. | | 166 | 35 | 2497 | 525 | 997 | 3919 |
| Potential Transformers, with Carrier & Line Trap | 2 | ea. | 17400 | 273 | 54 | 546 | 108 | 218 | 872 |
| 220kV Buswork (Strain Type, Taps, Jumpers, Fittings) | 1 | Lot | | 547 | 108 | 547 | 108 | 219 | 868 |
| Civil Work: Foundations, Surfacing | 1 | Lot | 1710 | 26 | 87 | 26 | 87 | 10 | 123 |
| Relay and Control Work: Transf & Bus Protection | 1 | Lot | 87000 | 1313 | 418 | 1313 | 418 | 521 | 2252 |
| Misc. Conduit, Wiring, Grounding, Lighting | 1 | Lot | 500 | 8 | 31 | 8 | 31 | 3 | 42 |
| SUBTOTAL IN 1000 Rs | | | | | | 197141 | 40862 | 78847 | 316850 |
| Contingency (Equipment & Dut. Only) | 10 | % | | | | 19714 | | 7885 | 27599 |
| Inland Transport (Equipment Only) | 5 | % | | | | 10857 | | | 10857 |
| Import License (2%), Insurance (.5%), Clearance (.2%) | 2.7 | % | | | | 5266 | | | 5266 |
| Engineering, Administration, Audit & Inspection | 5 | % | | | | 21428 | 2043 | 7886 | 32357 |
| Interest During Construction | 17 | % | | | | 27394 | 5751 | 12391 | 45536 |
| TOTAL IN 1000 Rs | | | | | | 287667 | 50330 | 106828 | 444825 |

Rev:0

# SUBSTATION COST ESTIMATE

## KESC 220 kV Substation - Plan 1

% Duty Rate: 40 — BY:TLH/DFD — DATE:Aug 30, 1985

Monetary Unit: Rs x1,000(JUNE'85) — Exch Rate (Rs/$)= 15.7 — CHECKED:DShafer — DATE:

| ITEM AND DESCRIPTION | Item QTY | Item UNIT | Foreign Exchange US$/Unit | Foreign Exchange Rs/Unit | Local Cost Rs/Unit | F.E.C. Totals | LOCAL COSTS Totals | DUTY COSTS Totals | TOTAL COSTS |
|---|---|---|---|---|---|---|---|---|---|
| 220kV EQUIPMENT ITEMS: | | | | | | | | | |
| 333 MVA, 220/500kV 65U Transformer (w/Arresters) 1 Ph | 0 | ea. | 170000 | 20410 | 4082 | 0 | 0 | 0 | 0 |
| 220kV Circuit Breaker, SF6, 40kA | 2 | ea. | | 1215 | 243 | 2429 | 486 | 975 | 3900 |
| Breaker Disconnect Switch | 4 | ea. | | 213 | 47 | 853 | 188 | 341 | 1382 |
| Line Disconnect Switch | 1 | ea. | | 269 | 59 | 269 | 59 | 107 | 434 |
| Surge Arrester | 3 | ea. | | 77 | 1 | 229 | 3 | 88 | 311 |
| Current Transformers | 5 | ea. | | 166 | 35 | 827 | 175 | 398 | 1400 |
| Potential Transformers, with Carrier & Line Trap | 1 | ea. | 17400 | 273 | 54 | 273 | 54 | 109 | 436 |
| 220kV Buswork (Strain Type, Tape, Jumpers, Fittings) | 1 | Lot | | 195 | 38 | 195 | 38 | 77 | 310 |
| Civil Work: Foundations, Surfacing, Land & Earthwork | 1 | Lot | 720 | 11 | 84 | 11 | 84 | 4 | 99 |
| Relay and Control Work: Transf & Bus Protection | 1 | Lot | 31000 | 486 | 254 | 486 | 254 | 194 | 934 |
| Misc. Conduit, Wiring, Grounding, Lighting | 1 | Lot | 360 | 5 | 45 | 5 | 45 | 2 | 52 |
| SUBTOTAL IN 1000 Rs | | | | | | 5747 | 1420 | 2295 | 9462 |
| Contingency (Equipment & Duty Only) | 10 | % | | | | 575 | | 230 | 805 |
| Inland Transport (Equipment Only) | 5 | % | | | | 216 | | | 216 |
| Import License (2%), Insurance (.5%), Clearance (.2%) | 2.7 | % | | | | 171 | | | 171 |
| Engineering, Administration, Audit & Inspection | 9 | % | | | | 617 | 128 | 227 | 968 |
| Interest During Construction | 12 | % | | | | 865 | 201 | 358 | 1424 |
| TOTAL IN 1000 Rs | | | | | | 8387 | 1749 | 3110 | 13246 |

Rev:0
File:W4PD

# SUBSTATION COST ESTIMATE

## KESC 220 kV Substation - Plan 2,2A&4

% Duty Rate: 40 — BY:TLH/DFD — DATE:Aug 30, 1985

Monetary Unit: Rs x1,000(JUNE'85) — Exch Rate (Rs/$)= 15.7 — CHECKED:DShafer — DATE:

| ITEM AND DESCRIPTION | Item QTY | Item UNIT | Foreign Exchange US$/Unit | Foreign Exchange Rs/Unit | Local Cost Rs/Unit | F.E.C. Totals | LOCAL COSTS Totals | DUTY COSTS Totals | TOTAL COSTS |
|---|---|---|---|---|---|---|---|---|---|
| 220kV EQUIPMENT ITEMS: | | | | | | | | | |
| 222 MVA, 220/200V GSU Transformer (w/Arresters) 1 Ph | 0 | ea. | 1700000 | 20410 | 4082 | 0 | 0 | 0 | 0 |
| 220kV Circuit Breaker, SF6, 400A | 3 | ea. | | 1215 | 247 | 3588 | 725 | 1347 | 5850 |
| Breaker Disconnect Switch | 6 | ea. | | 217 | 47 | 1279 | 282 | 511 | 2072 |
| Line Disconnect Switch | 2 | ea. | | 269 | 58 | 579 | 116 | 215 | 910 |
| Surge Arrester | 6 | ea. | | 72 | 1 | 440 | 6 | 173 | 619 |
| Current Transformers | 9 | ea. | | 166 | 35 | 1496 | 315 | 598 | 2409 |
| Potential Transformers, with Carrier & Line Trap | 2 | ea. | 17400 | 273 | 54 | 546 | 108 | 218 | 872 |
| 220kV Busbar (Strain Type, Tape, Jumpers, Fittings) | 1 | Lot | | 760 | 71 | 760 | 71 | 147 | 974 |
| Civil Work: Foundations, Surfacing, Land & Earthwork | 1 | Lot | 1060 | 16 | 69 | 16 | 69 | 8 | 107 |
| Relay and Control Work: Transf & Bus Protection | 1 | Lot | 41000 | 647 | 286 | 647 | 286 | 257 | 1186 |
| Misc. Conduit, Wiring, Grounding, Lighting | 1 | Lot | 320 | 5 | 45 | 5 | 45 | 2 | 52 |
| SUBTOTAL IN 1000 Rs | | | | | | 8981 | 2043 | 3589 | 14613 |
| Contingency (Equipment & Duty Only) | 10 | % | | | | 898 | | 359 | 1257 |
| Inland Transport (Equipment Only) | 5 | % | | | | 494 | | | 494 |
| Import License (2%), Insurance (.5%), Clearance (.2%) | 3 | % | | | | 267 | | | 267 |
| Engineering, Administration, Audit & Inspection | 8 | % | | | | 652 | 204 | 359 | 1457 |
| Interest During Construction | 17 | % | | | | 1516 | 250 | 559 | 2325 |
| TOTAL IN 1000 Rs | | | | | | 13106 | 2517 | 4862 | 20485 |

Rev:0
File:WAPDA-LAM2

# SUBSTATION COST ESTIMATE

## KESC 220 kV Substation - Plan 3

% Duty Rate: 40
Monetary Unit: Rs x1,000(JUNE'85) Exch Rate (Rs/$)= 15.7

BY:TLH/DFD DATE:Aug 30, 1985
CHECKED:DShafer DATE:

| ITEM AND DESCRIPTION | Item QTY | Item UNIT | Foreign Exchange US$/Unit | Foreign Exchange Rs/Unit | Local Cost Rs/Unit | F.E.C. Totals | LOCAL COSTS Totals | DUTY COSTS Totals | TOTAL COSTS |
|---|---|---|---|---|---|---|---|---|---|
| 220kV EQUIPMENT ITEMS: | | | | | | | | | |
| 333 MVA, 220/20kV GSU Transformer (w/Arresters) 1 Ph | 0 | ea. | 1700000 | 26696 | 4082 | 0 | 0 | 0 | 0 |
| 220kV Circuit Breaker, SF6, 40kA | 5 | ea. | | 1215 | 242 | 6097 | 1215 | 2436 | 9750 |
| Breaker Disconnect Switch | 10 | ea. | | 217 | 47 | 2172 | 470 | 852 | 3454 |
| Line Disconnect Switch | 3 | ea. | | 269 | 58 | 808 | 174 | 323 | 1305 |
| Surge Arrester | 9 | ea. | | 73 | 1 | 660 | 9 | 264 | 933 |
| Current Transformers | 15 | ea. | | 166 | 35 | 2493 | 525 | 997 | 4015 |
| Potential Transformers, with Carrier & Line Trap | 3 | ea. | 17400 | 273 | 54 | 819 | 162 | 327 | 1308 |
| 220kV Buswork (Strain Type, Taps, Jumpers, Fittings) | 1 | Lot | | 547 | 108 | 547 | 108 | 217 | 872 |
| Civil Work: Foundations, Surfacing, Land & Earthwork | 1 | Lot | 1710 | 26 | 67 | 26 | 67 | 10 | 103 |
| Relay and Control Work: Transf & Bus Protection | 1 | Lot | 37000 | 588 | 355 | 588 | 355 | 235 | 1178 |
| Misc. Conduit, Wiring, Grounding, Lighting | 1 | Lot | 460 | 9 | 81 | 9 | 81 | 7 | 97 |
| SUBTOTAL IN 1000 Rs | | | | | | 14575 | 3186 | 5826 | 23587 |
| Contingency (Equipment & Duty Only) | 10 | % | | | | 1458 | | 582 | 2041 |
| Inland Transport (Equipment Only) | 5 | % | | | | 802 | | | 802 |
| Import License (2%), Insurance .5%, Clearance .2% | 2.7 | % | | | | 433 | | | 433 |
| Engineering, Administration, Audit & Inspection | 9 | % | | | | 1554 | 287 | 577 | 2418 |
| Interest During Construction | 17 | % | | | | 2447 | 451 | 908 | 3806 |
| TOTAL IN 1000 Rs | | | | | | 21269 | 3924 | 7894 | 33087 |

Rev:0
File:W4PIA-LAN3

USI 2107000

# SUBSTATION COST ESTIMATE

## Jamshoro 550/220kV Substation - Plan 1 & 2

% Duty Rate: 40
Monetary Unit: Rs x1,000(JUNE'85)
Exch Rate (Rs/$)= 15.7

BY:TLH/DFD
CHECKED:DShafer

DATE:Aug 30, 1985
DATE:

| ITEM AND DESCRIPTION | Item QTY | Item UNIT | Foreign Exchange US$/Unit | Foreign Exchange Rs/Unit | Local Cost Rs/Unit | F.E.C. Totals | LOCAL COSTS Totals | DUTY COSTS Totals | TOTAL COSTS |
|---|---|---|---|---|---|---|---|---|---|
| **550kV EQUIPMENT ITEMS:** | | | | | | | | | |
| 3x150MVA,550/220kV Autotransf (w/Tert & Arresters) | 0 | ea. | | 24941 | 4525 | 0 | 0 | 0 | 0 |
| 550kV Circuit Breaker, SF6, 40kA | 0 | ea. | | 7482 | 675 | 0 | 0 | 0 | 0 |
| Breaker Disconnect Switch | 0 | ea. | | 900 | 179 | 0 | 0 | 0 | 0 |
| Line Disconnect Switch | 0 | ea. | | 1093 | 217 | 0 | 0 | 0 | 0 |
| Surge Arrester | 0 | ea. | | 189 | 37 | 0 | 0 | 0 | 0 |
| Current Transformers | 0 | ea. | | 610 | 121 | 0 | 0 | 0 | 0 |
| Potential Transformers, with Carrier & Line Trap | 0 | ea. | | 571 | 106 | 0 | 0 | 0 | 0 |
| 550kV Buswork (Strain Type, Tape, Jumpers, Fittings) | 0 | Lot | | 0 | 0 | 0 | 0 | 0 | 0 |
| Civil Work: Foundations, Surfacing | 0 | Lot | 0 | 0 | 0 | 0 | 0 | 0 | 0 |
| Relay and Control Work: Transf & Bus Protection | 0 | Lot | 0 | 0 | 0 | 0 | 0 | 0 | 0 |
| Misc. Conduit, Wiring, Grounding, Lighting | 0 | Lot | 0 | 0 | 0 | 0 | 0 | 0 | 0 |
| **220kV EQUIPMENT ITEMS:** | | | | | | | | | |
| 220kV Circuit Breaker, SF6, 40kA | 2 | ea. | | 1219 | 242 | 2439 | 486 | 975 | 3900 |
| Breaker Disconnect Switch | 4 | ea. | | 212 | 47 | 852 | 188 | 341 | 1382 |
| Line Disconnect Switch | 1 | ea. | | 268 | 58 | 268 | 58 | 107 | 433 |
| Surge Arrester | 2 | ea. | | 72 | 1 | 144 | 2 | 88 | 234 |
| Current Transformers | 5 | ea. | | 166 | 75 | 827 | 210 | 399 | 1436 |
| Potential Transformers, with Carrier & Line Trap | 1 | ea. | 17400 | 273 | 54 | 273 | 54 | 109 | 436 |
| 220kV Buswork (Strain Type, Tape, Jumpers, Fittings) | 1 | Lot | | 195 | 38 | 195 | 38 | 77 | 310 |
| Civil Work: Foundations, Surfacing | 1 | Lot | 720 | 11 | 24 | 11 | 24 | 4 | 39 |
| Relay and Control Work: Transf & Bus Protection | 1 | Lot | 31000 | 486 | 254 | 486 | 254 | 174 | 914 |
| Misc. Conduit, Wiring, Grounding, Lighting | 1 | Lot | 700 | 4 | 36 | 4 | 36 | 1 | 41 |
| SUBTOTAL IN 1000 Rs | | | | | | 5746 | 1411 | 2294 | 9451 |
| Contingency (Equipment & Inst. 3%) | 3 | % | | | | 172 | | 229 | 514 |
| Inland Transport (Equipment Only) | 5 | % | | | | 286 | | | 286 |
| Import License (2%), Insurance (.5%), Clearance (.2%) | 2.7 | % | | | | 171 | | | 171 |
| Engineering, Administration, Audit & Inspection | 9 | % | | | | 517 | 127 | 207 | 517 |
| Interest During Construction | 17 | % | | | | 975 | 201 | 356 | 1532 |
| TOTAL IN 1000 Rs | | | | | | 8386 | 1738 | 3106 | 13232 |

Rev:0
File:WAPDA[redacted]

USD [illegible]

# SUBSTATION COST ESTIMATE

## Jamshoro 550/220kV Substation - Plan 2A

% Duty Rate: 40 | BY:TLH/DFD | DATE:Aug 30, 1985

Monetary Unit: Rs x1,000(JUNE'85) | Exch Rate (Rs/$)= 15.7 | CHECKED:DShafer | DATE:

| ITEM AND DESCRIPTION | Item QTY | Item UNIT | Foreign Exchange US$/Unit | Foreign Exchange Rs/Unit | Local Cost Rs/Unit | F.E.C. Totals | LOCAL COSTS Totals | DUTY COSTS Totals | TOTAL COSTS |
|---|---|---|---|---|---|---|---|---|---|
| **550kV EQUIPMENT ITEMS:** | | | | | | | | | |
| 7 150MVA,550/220kV Autotransf (w/Tert & Arresters) | 0 | ea. | | 24541 | 4966 | 0 | 0 | 0 | 0 |
| 550kV Circuit Breaker, SF6, 40kA | 0 | ea. | | 7487 | 696 | 0 | 0 | 0 | 0 |
| Breaker Disconnect Switch | 0 | ea. | | 500 | 179 | 0 | 0 | 0 | 0 |
| Line Disconnect Switch | 0 | ea. | | 1069 | 217 | 0 | 0 | 0 | 0 |
| Surge Arrester | 0 | ea. | | 189 | 37 | 0 | 0 | 0 | 0 |
| Current Transformers | 0 | ea. | | 610 | 121 | 0 | 0 | 0 | 0 |
| Potential Transformers, with Carrier & Line Trap | 0 | ea. | | 531 | 106 | 0 | 0 | 0 | 0 |
| 550kV Buswork (Strain Type, Taps, Jumpers, Fittings) | 0 | Lot | | 0 | 0 | 0 | 0 | 0 | 0 |
| Civil Work: Foundations, Surfacing | 0 | Lot | 0 | 0 | 0 | 0 | 0 | 0 | 0 |
| Relay and Control Work: Transf & Bus Protection | 0 | Lot | 0 | 0 | 0 | 0 | 0 | 0 | 0 |
| Misc. Conduit, Wiring, Grounding, Lighting | 0 | Lot | 0 | 0 | 0 | 0 | 0 | 0 | 0 |
| **220kV EQUIPMENT ITEMS:** | | | | | | | | | |
| 220kV Circuit Breaker, SF6, 40kA | 3 | ea. | | 1219 | 247 | 3657 | 729 | 1467 | 5850 |
| Breaker Disconnect Switch | 3 | ea. | | 317 | 47 | 1279 | 282 | 511 | 2072 |
| Line Disconnect Switch | 2 | ea. | | 369 | 58 | 579 | 116 | 215 | 870 |
| Surge Arrester | 6 | ea. | | 77 | 1 | 440 | 6 | 176 | 622 |
| Current Transformers | 6 | ea. | | 166 | 25 | 1494 | 315 | 598 | 2407 |
| Potential Transformers, with Carrier & Line Trap | 2 | ea. | 17400 | 273 | 54 | 546 | 108 | 218 | 872 |
| 220kV Buswork (Strain Type, Taps, Jumpers, Fittings) | 1 | Lot | | 740 | 71 | 740 | 71 | 147 | 958 |
| Civil Work: Foundations, Surfacing | 1 | Lot | 1060 | 16 | 65 | 16 | 65 | 8 | 107 |
| Relay and Control work: Transf & Bus Protection | 1 | Lot | 41000 | 643 | 286 | 643 | 286 | 257 | 1186 |
| Misc. Conduit, Wiring, Grounding, Lighting | 1 | Lot | 300 | 4 | 36 | 4 | 36 | 1 | 41 |
| SUBTOTAL IN 1000 Rs | | | | | | 8980 | 2034 | 3588 | 14602 |
| Contingency (Equipment & Duty Only) | 10 | % | | | | 898 | | 359 | 1257 |
| Inland Transport (Equipment Only) | 5 | % | | | | 494 | | | 494 |
| Import License (2%), Insurance (.5%), Clearance (.2%) | 2.7 | % | | | | 267 | | | 267 |
| Engineering, Administration, Audit & Inspection | 5 | % | | | | 559 | 167 | 335 | 1061 |
| Interest During Construction | 17 | % | | | | 1546 | 302 | 619 | 2467 |
| TOTAL IN 1000 Rs | | | | | | 13105 | 2505 | 4861 | 20471 |

USD 1304.00

Rev:0

File:WAPDA-L4M2

# SUBSTATION COST ESTIMATE

## Jamshoro 550/220kV Substation - Plan 3

% Duty Rate: 40 — BY:TLH/DFD — DATE:Aug 30, 1985

Monetary Unit: Rs x1,000(JUNE'85) — Exch Rate (Rs/$)= 15.7 — CHECKED:DShafer — DATE:

| ITEM AND DESCRIPTION | Item QTY | Item UNIT | Foreign Exchange US$/Unit | Foreign Exchange Rs/Unit | Local Cost Rs/Unit | F.E.C. Totals | LOCAL COSTS Totals | DUTY COSTS Totals | TOTAL COSTS |
|---|---|---|---|---|---|---|---|---|---|
| 550kV EQUIPMENT ITEMS: | | | | | | | | | |
| 3x150MVA,550/220kV Autotransf (w Tert & Arresters) | 0 | ea. | | 24941 | 4988 | 0 | 0 | 0 | 0 |
| 550kV Circuit Breaker, SF6, 4000A | 0 | ea. | | 7482 | 896 | 0 | 0 | 0 | 0 |
| Breaker Disconnect Switch | 0 | ea. | | 900 | 179 | 0 | 0 | 0 | 0 |
| Line Disconnect Switch | 0 | ea. | | 1085 | 217 | 0 | 0 | 0 | 0 |
| Surge Arrester | 0 | ea. | | 185 | 37 | 0 | 0 | 0 | 0 |
| Current Transformers | 0 | ea. | | 609 | 121 | 0 | 0 | 0 | 0 |
| Potential Transformers, with Carrier & Line Trap | 0 | ea. | | 571 | 106 | 0 | 0 | 0 | 0 |
| 550kV Buswork (Strain Type, Taps, Jumpers, Fittings) | 0 | Lot | | 0 | 0 | 0 | 0 | 0 | 0 |
| Civil Work: Foundations, Surfacing | 0 | Lot | 0 | 0 | 0 | 0 | | 0 | 0 |
| Relay and Control Work: Transf & Bus Protection | 0 | Lot | 0 | 0 | 0 | 0 | 0 | 0 | 0 |
| Misc. Conduit, Wiring, Grounding, Lighting | 0 | Lot | 0 | 0 | 0 | 0 | 0 | 0 | 0 |
| 220kV EQUIPMENT ITEMS: | | | | | | | | | |
| 220kV Circuit Breaker, SF6, 4000A | 5 | ea. | | 1218 | 247 | 6087 | 1235 | 2476 | 7761 |
| Breaker Disconnect Switch | 10 | ea. | | 217 | 47 | 2172 | 470 | 852 | 3492 |
| Line Disconnect Switch | 7 | ea. | | 262 | 53 | 1836 | 371 | 727 | 2935 |
| Surge Arrester | 5 | ea. | | 37 | 1 | 185 | 5 | 264 | 454 |
| Current Transformers | 15 | ea. | | 166 | 35 | 2487 | 525 | 997 | 4015 |
| Potential Transformers, with Carrier & Line Trap | 7 | ea. | 17400 | 277 | 54 | 519 | 162 | 727 | 1408 |
| 220kV Buswork (Strain Type, Taps, Jumpers, Fittings) | 1 | Lot | | 547 | 108 | 547 | 108 | 217 | 872 |
| Civil Work: Foundations, Surfacing | 1 | Lot | 1710 | 26 | 57 | 26 | 57 | 17 | 100 |
| Relay and Control Work: Transf & Bus Protection | 1 | Lot | 17000 | 565 | 755 | 565 | 755 | 339 | 1659 |
| Misc. Conduit, Wiring, Grounding, Lighting | 1 | Lot | 600 | 5 | 81 | 5 | 81 | 3 | 87 |
| SUBTOTAL IN 1000 Rs | | | | | | 14575 | 3186 | 5826 | 23587 |
| Contingency (Equipment & Duty Only) | 11 | % | | | | 1455 | | 582 | 2041 |
| Inland Transport (Equipment Only) | 5 | % | | | | 642 | | | 642 |
| Import License (2%), Insurance (.5%), Clearance (.2%) | 2.7 | % | | | | 477 | | | 477 |
| Engineering, Administration, Audit & Inspection | 5 | % | | | | 1554 | 227 | 577 | 2358 |
| Interest During Construction | 17 | % | | | | 2547 | 451 | 908 | 3906 |
| TOTAL IN 1000 Rs | | | | | | 21269 | 3924 | 7894 | 33087 |

Rev:0

File:WAP[illegible]MT

# SUBSTATION COST ESTIMATE

## Jamshoro 550/220kV Substation - Plan 4

% Duty Rate: 40 — BY:TLH/DFD — DATE:Aug 30, 1985

Monetary Unit: Rs x1,000(JUNE'85) — Exch Rate (Rs/$)= 15.7 — CHECKED:DShafer — DATE:

| ITEM AND DESCRIPTION | Item QTY | Item UNIT | Foreign Exchange US$/Unit | Foreign Exchange Rs/Unit | Local Cost Rs/Unit | F.E.C. Totals | LOCAL COSTS Totals | DUTY COSTS Totals | TOTAL COSTS |
|---|---|---|---|---|---|---|---|---|---|
| **550kV EQUIPMENT ITEMS:** | | | | | | | | | |
| 500kV Shunt Reactor,3-1Ph,20 MVA | 2 | ea. | | 9925 | 1985 | 19851 | 3970 | 7940 | 31761 |
| 3x150MVA,550/220kV Autotrans* (w/Tert & Arresters) | 0 | ea. | | 24841 | 4968 | 0 | 0 | 0 | 0 |
| 550kV Circuit Breaker, SF6, 40kA | 2 | ea. | | 7452 | 696 | 10445 | 2088 | 4177 | 16710 |
| Breaker Disconnect Switch | 6 | ea. | | 500 | 178 | 5338 | 1674 | 2159 | 8671 |
| Line Disconnect Switch | 2 | ea. | | 1089 | 217 | 2177 | 474 | 870 | 3481 |
| Surge Arrester | 6 | ea. | | 165 | 77 | 1175 | 462 | 470 | 1810 |
| Current Transformers | 9 | ea. | | 610 | 121 | 5487 | 1089 | 2194 | 8770 |
| Potential Transformers, with Carrier & Line Trap | 2 | ea. | | 571 | 106 | 1141 | 212 | 424 | 1697 |
| 550kV Buswork (Strain Type, Taps, Jumpers, Fittings) | 1 | Lot | | 537 | 107 | 537 | 107 | 214 | 858 |
| Civil Work: Foundations, Surfacing | 1 | Lot | 1800 | 28 | 0 | 28 | 0 | 11 | 39 |
| Relay and Control Work: Transf & Bus Protection | 1 | Lot | 50000 | 785 | 0 | 785 | 0 | 314 | 1099 |
| Misc. Conduit, Wiring, Grounding, Lighting | 1 | Lot | 4600 | 72 | 648 | 72 | 648 | 28 | 748 |
| **220kV EQUIPMENT ITEMS:** | | | | | | | | | |
| 220kV Circuit Breaker, SF6, 40kA | 0 | ea. | | 1219 | 247 | 0 | 0 | 0 | 0 |
| Breaker Disconnect Switch | 0 | ea. | | 217 | 47 | 0 | 0 | 0 | 0 |
| Line Disconnect Switch | 0 | ea. | | 269 | 58 | 0 | 0 | 0 | 0 |
| Surge Arrester | 0 | ea. | | 77 | 1 | 0 | 0 | 0 | 0 |
| Current Transformers | 0 | ea. | | 166 | 35 | 0 | 0 | 0 | 0 |
| Potential Transformers, with Carrier & Line Trap | 0 | ea. | 17400 | 273 | 54 | 0 | 0 | 0 | 0 |
| 220kV Buswork (Strain Type, Taps, Jumpers, Fittings) | 0 | Lot | | 11 | 2 | 0 | 0 | 0 | 0 |
| Civil Work: Foundations, Surfacing | 0 | Lot | 50 | 1 | 22 | 0 | 0 | 0 | 0 |
| Relay and Control Work: Transf & Bus Protection | 0 | Lot | 12000 | 204 | 156 | 0 | 0 | 0 | 0 |
| Misc. Conduit, Wiring, Grounding, Lighting | 0 | Lot | 400 | 6 | 51 | 0 | 0 | 0 | 0 |
| SUBTOTAL IN 1000 Rs | | | | | | 46975 | 9844 | 18784 | 75603 |
| Contingency (Equipment & Out. Eng.) | 15 | % | | | | 3463 | | 1676 | 5139 |
| Inland Transport (Equipment Only) | 5 | % | | | | 2351 | | | 2351 |
| Import License (2%), Insurance (.5%), Clearance (.5%) | 3.7 | % | | | | 1735 | | | 1735 |
| Engineering, Administration, Audit & Inspection | 5 | % | | | | 2348 | 492 | 1840 | 4680 |
| Interest During Construction | 17 | % | | | | 7926 | 1659 | 5176 | 14761 |
| TOTAL IN 1000 Rs | | | | | | 68547 | 12125 | 25450 | 106122 |

Rev:0

File:WAPDA-LAHA

## 4.0 LAKHRA COAL CHARACTERISTICS

### 4.1 FUEL ANALYSES

The quality of Lakhra coal has been stated in the coal mine feasibility study conducted by John T. Boyd Company as tabulations 1 and 2. The coal analyses are shown on three tables as follows:

Table 4.1-1, Fuel Analyses,
Table 4.1-2, Unwashed, Boiler Specification
Table 4.1-3, Washed, Boiler Specification.

Table 4.1-1 summarizes JICA coal data, PMDC 2 analyses for test burning and washability analyses and BT-11 analyses for test burning. Table 4.1-2 summarizes run of mine coals for boiler specification purposes from J. T. Boyd's Tabulation 1. Table 4.1-3 summarizes washed coals for boiler specification purposes from J. T. Boyd's Tabulation 2.

The Lakhra coal is characterized as:

- High moisture, ash and sulfur content.
- Severe slagging and medium to high fouling.
- Low calorific value.
- Easy to pulverize, high HGI index and abrasive.
- Low ash fusion temperature.

The combustion testing program has determined the flame temperature at which deposits in the test furnace remain cleanable for unwashed and washed coal is the same. These data have been translated into furnace design parameters for the boiler designer to design a furnace that will not slag up with uncleanable deposits and not be so conservative as to affect the size and cost of the superheater and reheater heating surfaces. The combustion testing program has also determined that despite being easy to pulverize, the Lakhra coal and ash are very abrasive. These data will result in a boiler design with low gas velocity and gentle turns of gas direction to minimize erosion of heating surfaces in the furnace exit and boiler convection surface areas. Lakhra coal quality, while not as good as an electrical generating authority would prefer, is not so bad that it cannot be efficiently utilized with the specification of applicable design parameters.

Table 4.1-1 Discussion

The thirteen unwashed coal analyses on Table 4.1-1 illustrate the variability of Lakhra coals. Analyses 1, 2, 3, 4, 11, 11A and 11B are from the lease area and were compiled in the JICA report (1 to 4) or by J. T. Boyd Co. (11) and Combustion Engineering (11A and 11B). Analyses 5 through 10 are from PMDC Mine No. 2 and were compiled by GCII; Standard Laboratories, Inc. for John T. Boyd Co.; Combustion Engineering and Commercial Testing & Engineering Co. for Roberts & Schaefer Company.

Analysis No. 4 by JICA is based on the ratio of 50 percent from the west open pit mine, 30 percent from the east open pit mine and 20 percent from the central underground mine.

Analysis No. 5 is a channel sample from PMDC Mine No. 2 that was collected by GCII in 1984 during a pre-bid visit to Pakistan.

Analysis No. 6 is the Boyd channel sample that was taken from PMDC No. 2 when the first 45 tonnes (50 tons) of Lakhra coal was collected in January 1985 and shipped to the USA for combustion testing and washability analysis. That sample was analyzed by Standard Laboratories for the J.T. Boyd Company. Analysis No. 7 is from the first unwashed (baseline), combustion test burn and was performed by the KDL facility of Combustion Engineering. Analysis No. 8 represents a 2.7 tonne (3 ton) sample from the first shipment that was segregated for washability testing and was analyzed by Commercial Testing and Engineering for Roberts & Schaefer. Study of Analyses 6, 7 and 8 exemplifies the variability of Lakhra coal. The coal samples were extracted from the same area of PMDC No. 2 at the same time, yet the analyses are different, but related.

Analysis No. 9 is of the second 45 tonnes (50 tons) that was collected from PMDC No. 2 in April 1985, and shipped to the USA for washing and combustion testing of the washed product. The washed coals from Analysis No. 9 are Analyses Nos. 16 and 17 by Commercial Testing and Engineering and Combustion Engineering, respectively. The Roberts & Schaefer washability analysis (Section 4.2, this report) discusses this subject in detail. Regardless, comparing Analysis No. 9 to Analyses Nos. 16 and 17, one can observe the lower ash and sulfur content and its effect on uncontrolled emissions and see the contrast that the mineral content did not change significantly. Preliminary results of burning the washed Lakhra coal confirmed this observation by concluding that the boiler and furnace size would not change if washed coal were to be utilized in lieu of unwashed coal.

Analysis No. 10 was performed by Combustion Engineering on a sample supplied to them by DOE/Pittsburgh that was collected from PMDC No. 2. It appeared at first examination to have been washed, but conversations with both DOE and Combustion Engineering personnel confirm the sample consisted of large 200mm to 300mm (8 to 12 inch) samples of coal and could not have been washed without proper sizing down to 60mm (2 1/2 inches) and below. The sample was most likely from a rich portion of the PMDC No. 2 mine seam and is not indicative of a controlled channel sample.

Analysis Nos. 11, 11A and 11B are comparable to Analysis No. 1 in that these samples are from the west lease area and they are useful to study what changes do and do not occur by washing Lakhra coal, by comparison to Analyses Nos. 12 and 13. Note that the BT-11 Analysis (No. 11) is a composite sample of Seam Nos. 1 and 2 at the bore hole, but the washed analyses (Nos. 12 and 13) are for Seam No. 1 and Seam No. 2 uncombined.

The mean lbs $SO_2$ per million Btu for raw coal is 14.5 versus a value of 9.3 lbs $SO_2$ per million Btu for washed coal. This represents a reduction in uncontrolled emissions of $SO_2$ of about 35 percent. Likewise the average figures for ash loading to the furnace are 29.8 versus 18.5 lbs ash per million Btu or a reduction of about 38 percent.

The typical split between bottom ash and fly ash for a lignitic coal is 30/70, respectively. The results of combustion testing support a ratio of bottom ash to fly ash split of 40/60. GCII recommends that 70 percent as fly ash be used for air quality control design purposes and that the bottom ash design recognize the potential of 40 percent to the bottom ash hopper.

The mean initial deformation temperature for the 13 raw samples is 2,129°F compared to 2,101°F for the six washed samples. This differential is not significant and supports the conclusions of the washability analysis that there is no real change in the combustion characteristics even though uncontrolled ash loading and $SO_2$ loading are reduced per unit of heat input. The results of the combustion test program have concluded that specification design parameters will not differ for unwashed versus washed coal, and the size and cost of the boiler will not vary enough to see anything other than very minor differences. The Lakhra coal is severe slagging regardless of being washed or unwashed. The fouling index will not change for unwashed and washed coal from the Lakhra field.

A small amount of ash and noncombustible material and pyritic sulfur will be rejected from the pyrites hopper of the "roll and race" coal pulverizers that Babcock & Wilcox, Combustion

Engineering and Foster-Wheeler are expected to offer for this service. The combustion testing program reports show a pulverizer reject rate of 2.1 percent, 0.8 percent, 0.7 percent and 0.2 percent respectively for baseline, washed, BT-11 Seam No. 1 and BT-11 Seam No. 2 coals.

The U.S. EPA emission factor for sulfur as $SO_x$ in a subbituminous coal is 35S, where S is the percent sulfur in the fuel and the emission rate is pounds sulfur oxides per ton of coal fired. The emission factor for sulfur as $SO_x$ in a low sodium lignitic coal like Lakhra is 35S, the same as for subbituminous coal. This emission factor allows that 12.5 percent of the sulfur may be rejected as pyrites or bound in the ash as sulfates. One of the EPA references is "G.H. Gronhovd et al, Some Studies on Stack Emissions from Lignite Fired Power Plants," presented at the 1973 Lignite Symposium, Grand Forks, North Dakota, USA, May 1973. That reference contains this formula for the percent of input sulfur in the coal (lignite) emitted as sulfur dioxide:

$$SE = 110.1 - 12.7 \frac{CaO}{Al_2O_3} - 48.1 \frac{Na_2O}{Si\ O_2}$$

The above formula for Lakhra coals yields an SE generally greater than 100 percent, which indicates that the co-efficients 12.7 and 48.1 are not applicable to Lakhra coals. The formula would be usable if revised coefficients for the calcium to alumina and sodium to silica ratios were known. To develop such revised coefficients would require extensive laboratory and field testing of Lakhra coals. There are no power boilers now burning Lakhra coals that could be used to compare field data to laboratory data. The formula was developed for Western Plains lignites which are characterized by the following partial mineral analyses compared to Lakhra:

| | W. Plains Lignites | Lakhra Lignite |
|---|---|---|
| CaO | 15.6 - 28.2% | 2.71 - 9.90% |
| $Al_2O_3$ | 9.8 - 14.5% | 14.70 - 28.46% |
| $Na_2O$ | 0.8 - 9.0% | 0.59 - 2.90% |
| $SiO_2$ | 14.2 - 46.0% | 21.10 - 41.63% |

The Western Plains lignites have a higher calcium content, lower alumina content, higher sodium content and no significant differences in silica content. The higher calcium and sodium

content will tend to result in an answer to the completed formula that is less than 100 percent.

The U.S. EPA emission factor for $SO_2$ for sub-bituminous and lignite coals is based on USA experience and the three references cited by U.S. EPA for the emission factor are papers based on North Dakota lignite. GCII feels that while some of the sulfur will be bound in the ash as sulfate salts for Lakhra lignite, not enough is known about the behavior of the latter to apply the U.S. EPA's emission factor or the formula for "SE" and determine with confidence what percent of sulfur is emitted as $SO_2$. The prudent approach is to assume that 10 percent of the sulfur in Lakhra coals is rejected as pyrites or retained in the ash as sulfates or both. The combustion test program determined that the percent reduction of sulfur in the fuel was greater than the percent of mill rejects, and that 7 to 13 percent of the sulfur in Lakhra was retained as sulfates in ashes.

Lakhra lignite, while different than other lignites in some respects of its chemical and mineral analyses, is in reality like many of the lignites in the world in that it:

- is easy to pulverize.
- provides a good intense stable flame.
- requires a large conservative furnace.
- needs special handling for its tendency to self ignite.

Table 4.1-2 Discussion

The daily and monthly average unwashed coal quality expressed in terms of the short proximate analysis are:

| Daily | Typical | Range |
|---|---|---|
| GCV-Btu/lb (dry) | 7500 | 6300 - 8700 |
| % Ash (dry) | 36.0 | 26.0 - 46.0 |
| % Sulfur (dry) | 7.4 | 6.5 - 9.5 |
| % Moisture | 32.0 | 25.0 - 45.0 |
| Lbs $SO_2$/Million Btu | 19.73 | -- |
| **Monthly** | | |
| GCV-Btu/lb (dry) | 7500 | 6900 - 8100 |
| % Ash (dry) | 36.0 | 30.0 - 42.0 |
| % Sulfur (dry) | 7.4 | 6.8 - 8.3 |
| % Moisture | 32.0 | 28.0 - 40.0 |
| Lbs $SO_2$/Million Btu | 19.73 | -- |

These data are based on 95 percent of coal samples falling within the range indicated.

The mean coal tabulated by J. T. Boyd is:

| | |
|---|---|
| % Ash (dry) | 32.10 |
| % VM (dry) | 36.71 |
| % FC (dry) | 31.19 |
| % Sulfur (dry) | 7.71 |
| GCV-Btu/lb (dry) | 7986 |
| Lb $SO_2$/Million Btu | 19.31 |

This analysis was reduced to a moisture and ash free basis as follows:

| | MAF |
|---|---|
| % VM | 54.06 |
| % FC | 45.94 |
| % Sulfur | 11.35 |
| GCV-Btu/lb | 11,761 |

And then equated to 36 percent ash (dry) and 32 percent moisture as received as follows:

| | Proximate | Ultimate | |
|---|---|---|---|
| | | % $H_2O$ | 32.00 |
| % Ash | 36.00 | % Ash | 24.48 |
| % VM | 34.60 | % $H_2$ | 2.12 |
| % FC | 29.40 | % C | 29.12 |
| % Sulfur | 7.26 | % $N_2$ | 0.55 |
| GCV-Btu/hr | 7500 | % Sulfur | 4.94 |
| Lbs $SO_2$/ | | % $O_2$ | 6.79 |
| Million Btu | 19.36 | GCV-Btu/lb | 5100 |

This analysis is shown on Table 4.1-2 as "Mean."

Table 4.1-2 was tabulated for boiler specifications on the basis that the composite drill core analyses would have an average gross calorific value (GCV) between 5100 and 5200 Btu/lb, except for three high ash coals which would have a GCV near 4500 Btu/lb and three low ash coals which would contain the maximum daily average moisture of 45.0 percent. There are three low ash fusion temperature coals which would meet the base GCV between 5100 and 5200 Btu/lb.

The tabulated steam generator efficiencies were calculated based on an excess air of 30 percent and an air heater exit gas temperature of 300°F. The full load coal flow is shown

for that efficiency and the stated coal GCV. The tons per day (TPD) of sulfur dioxide has been calculated for the mean coal analysis and the composite analyses for a 70 percent annual capacity factor based on a 90 percent emission of sulfur in the fuel as sulfur dioxide.

The coal flow of 384 tons per hour for the mean coal results in 64 TPH per pulverizer for six active mills, plus one spare. If a sample of high ash coal is encountered, then the spare coal pulverizer will be used to avoid a derate in steam flow resulting from the lowered calorific value of such coal.

The uncontrolled emission rate of $SO_2$ exceeds a point source limit of 500 TPD for the mean analysis and all composite analyses from the west lease area. The point source limit is also exceeded by a majority of the composite analyses from the east and central lease areas. This requires an $SO_2$ removal device on the two 350 MW power plant steam generators. The specifics of the air quality control systems for the Lakhra Power Plant are discussed elsewhere in this report (Section 5.5.6 Analysis Of Environmental Control Technologies).

Table 4.1-3 Discussion

These data were taken from J. T. Boyd's Tabulation 2 for washed coals from the west, east and central lease areas of the PMDC lease. The 35 percent moisture content is consistent with J. T. Boyd's washability analysis report.

The calculated steam generator efficiencies are based on 30 percent excess air and an air heater exit gas temperature of 300°F, which matches the conditions for burning washed coals. The full load coal flow for washed coal is 18 percent lower than the coal flow for unwashed coal. The TPD of sulfur dioxide was calculated for a 70 percent annual capacity factor with 10 percent of sulfur in the fuel rejected as pyrites or retained in ashes as sulfates or both and is over 28 percent lower than unwashed coal.

The coal flow of 315 tons per hour for the mean coal would indicate that 5 mills could carry the full load requirements for washed coal as opposed to 6 mills for unwashed coal. A sixth coal mill is still needed for spare capacity and maintenance purposes.

The uncontrolled emission rate of sulfur dioxide is less than the point source limit of 500 TPD for the mean washed coal analysis and for all but one of the composite analyses from the west, east and central areas of the PMDC lease area.

The washing of Lakhra lignites removes the non-combustible clays, shales, sand and other non-carbonaceous materials. The slagging characteristics of washed and unwashed coals are the same, severe. This is as indicated by the slagging index and has been confirmed by combustion testing. The fouling index for washed coal generally averages "high" compared to unwashed coal generally averaging "medium." The combustion testing program indicated the fouling potential to be "moderate" for both washed and unwashed coals and attributed that potential to the high ash loading in and leaving the test furnace. The mean ash loading of unwashed coal is 48 pounds per million Btu compared to a mean of 24.2 pounds per million Btu for washed coal. The latter is still a high ash loading compared to some sub-bituminous and many bituminous coals. The "high" versus "medium" fouling index for the coals in Tables 4.1-2 and 4.1-3 is explained by a 50 percent plus increase in the sodium content of the ash of washed coal compared to unwashed coal.

## 4.2 COAL WASHABILITY ANALYSIS

Roberts & Schaefer Company was contracted by Gilbert/Commonwealth International, Inc., to determine the potential cleanability of the Lakhra lignite and to establish changes in fuel characteristics which would impact the design of the boiler and backend equipment. The scope of this endeavor was carried out in two stages. First, laboratory investigations of a 3 ton subsample that represented the initial shipment of PMDC Mine No. 2 raw coal for test burning were conducted to establish a theoretical washability analysis. Secondly, a bulk shipment of 50 tons was cleaned in a commercial preparation plant. The cleaning of this sample was required to provide feed material for a Phase II combustion test and provided an excellent opportunity to gauge the results of theoretical analysis against a commercial application. The findings served as initial baseline data for preparation plant design and cost estimates generated by John T. Boyd Company. These findings also helped GCII and Combustion Engineering determine the potential effects that cleaning would have on the burning of this fuel as reported in Section 4.1. Supplementation of this data base and the establishment of mean projected washed coal values as shown in Table 4.1-3 was performed by the John T. Boyd Company with data available from the BT-11 washability study and mine plan core analyses. The formulation of the test program for the washability study and commercial plant trial washing was a joint effort between Roberts & Schaefer, Gilbert/Commonwealth International, Inc. and John T. Boyd Companies.

### 4.2.1 General Summary and Conclusions

Theoretical investigations supported by a plant trial for PMDC No. 2 coal indicate that total cleaning through wet beneficiation at a high specific gravity (S.G.) of separation (1.87) can improve the overall boiler feed heat content by approximately 20 percent and reduce the ash/sulfur burden by 40 percent and 20 percent, respectively. The combination of improved Btu value and reduced sulfur content results in an approximate 40 percent reduction in $SO_2$ emissions for a given firing rate. These values correlate well with the Boyd core program results as shown on Tables 4.1-2 and 4.1-3.

Btu recovery and clean coal yield, however, were lower than projected due to the characteristic degradation of the coal mass once exposed to wet cleaning. Btu recovery and yield on a theoretical basis are 97 percent and 79.45 percent respectively at an S.G. of 1.87. Actual values from the plant trial indicate a lower range in the area of 91.5 percent for Btu recovery and 71.7 percent for yield. Even these values are

more optimistic than Boyd's projections of 78 percent Btu recovery and 64 percent yield. The lower yield is representative of a higher percentage of in seam dilution for lease area coal than that encountered with PMDC No. 2 coal. In addition, determination of boiler performance indices from the theoretical and commercial plant run suggest that cleaning does not improve the raw coal slagging and fouling characteristics and may potentially worsen these important boiler performance criteria.

The combustion test results, as discussed in Section 4.4, indicate that raw Lakhra lignite can be successfully burned in a pulverized coal furnace as long as careful attention is paid to proper design for the severe slagging and moderate fouling characteristics of the coal. Since the washability analysis performed indicates that improvements in ash and sulfur content are moderate with potentially worse slagging and fouling indices for the washed material, no significant improvements in the sizing or cost of the boiler can be expected. Given this fact, the only driving forces that may potentially justify coal washing are reduced ash handling and disposal system modifications and the potential for a moderate (40 percent) reduction in $SO_2$ emissions. The negative impact of low yield and Btu recovery must also be assessed. Either significant additional reserves must be proven in order to offset losses or the generation capacity of the units must be reduced. An economic comparison of alternate $SO_2$ reduction scenarios is presented in Chapter 8. This comparison includes as assessment of coal washing as an alternate.

### 4.2.2 Theoretical Analysis of Lab Washability (PMDC Mine No. 2 Seam)

Theoretical washability tests were conducted on a 3 ton subsample of the first PMDC No. 2 seam test shipment represented by the cross-section shown in Figure 1. The primary objective of this investigation was to develop the following:

a. Standard washability analyses of individual size fractions to permit theoretical assessment of the general cleanability of the lignite coal with regard to ash/sulfur reduction and Btu recovery/enhancement. For discussion purposes, emphasis was placed on the 4" x 100M composite size fraction as it represents the cleanable size range should wet processing be employed. In addition, this fraction represents virtually 100 percent of the material investigated.

   Cleanability was gauged by percent ash/sulfur removal and Btu recovery, as it is generally recognized that quality values (ash, sulfur, Btu/Lb., etc.) will vary between

individual samples in addition to those designated in the mine plan.

b. Decrepitation testing to permit assessment of the effects which air-drying would have on the raw coal size distribution and cleanability.

c. Size reduction tests to gauge their impact on coal cleanability.

d. Whole coal analyses of raw and cleaned coal at 1.60 and 1.80 specific gravity to permit determination of indices that would gauge the benefits of burning raw versus cleaned lignite. Selection of the clean coal specific gravities was based on preliminary work done by the U.S. Department of Energy that indicated a 25 percent reduction in raw coal feed weight while maintaining reasonable overall Btu recovery in excess of 90 percent when cleaning at gravity levels of 1.60 or greater is employed.

Commercial Testing and Engineering Company performed the analytical testing under the supervision of Roberts & Schaefer Company in accordance with appropriate ASTM standards. Presentation of the washability program and procedures, test results and any additional calculations required to make an appropriate assessment of the stated objectives is contained in Volume VIII.

It is worth noting that all testing was conducted without the addition of the major inseam parting packaged and shipped separately with the bulk sample. It was determined that its occurrence varied with location, and that when present, thickness varied. As such, a limited washability was performed on the inseam parting to serve as a basis for its mathematical addition to the coal washability should it be deemed necessary. This lends greater flexibility to the analysis and permits adjustments should they be indicated by information obtained from core data in the mine plan.

4.2.2.1 General Cleanability

Characteristic Washability Curves

Figures 4.2.2 through 4.2.8 depict the characteristic washability curves of the individual size fractions investigated. They essentially are a graphical depiction of the ash behavior derived from the constructed washability tables of the bulk washability study and permit one to project the results to be expected when cleaning coal. In addition, they provide insight into the practical range of separating gravities that

would yield acceptable cleaning efficiencies as well as the type of cleaning processes that could be applied to any given coal. Usually, this information is supplemented by ash/Btu relationships, Btu recovery and ash/sulfur removal criteria, as depicted in Figure 4.2.9 and Table 4.2-1 respectively, to more fully determine the effects of various levels of coal cleaning. The general rule is that coal quality becomes enhanced as the gravity of separation decreases due to progressively greater removal of low calorific mineral matter (ash, sulfur). Conversely, Btu recovery decreases; therefore the range of cleanability not only becomes a question of technical capability but one of economic consideration.

Specifically, the washability curves demonstrate the following:

Specific Gravity Yield Curve - shows the theoretical yield of washed coal from the raw feed at any gravity of separation.

Cumulative Float Ash (Clean Coal) Curve - shows the theoretical percent ash of the washed product at any given yield of washed product. Since it possesses the same ordinate as that of the specific gravity yield curve, it is possible to determine the separating gravity for a desired product ash content.

Cumulative Sink Ash (Refuse Ash) Curve - shows the rate change of ash content at different specific gravities of separation. This permits an assessment of the ease with which the coal can be separated from the refuse.

+/- 0.1 Specific Gravity Curve - shows the percentage by weight of coal that lies within ±0.10 specific gravity units of any specific gravity of separation. This serves as a guide for determining the lowest specific gravity to wash a particular coal as well as the type of cleaning process that should be employed to ensure high cleaning efficiencies and process control. Normally, raw feeds containing in excess of 10 percent material within ±0.10 S.G. of the separating gravity are difficult to wash.

A review of the 4" x 100M composite washability curve (Figure 4.2.2) indicates that the coal becomes increasingly more difficult to clean as the gravity of separation becomes lower. This effect intensifies with decreasing size fractions (Figures 4.2.3 through 4.2.8). As such, a practical range of cleanability should lie with separating gravities of 1.60 or greater when considering the 10 percent ±0.10 S.G. criteria. High efficiency cleaning processes (heavy media) are favored

at the separating gravity range of 1.60 to 1.80 while lower efficiency processes (water/air) may be suitable for gravities of separation greater than 1.80. It is possible to achieve ash levels of 17.5 percent (dry basis) at a clean coal yield of 73 percent when cleaning at the lowest practical gravity of separation of 1.60. These values increase with rising S.G. of separation.

Btu/Lb. Versus Dry Ash

Once an ash level and range of separating gravity is determined, one can determine the expected gain in calorific content at the determined range of S.G. by constructing an ash versus Btu/lb. relationship as shown in Figure 4.2.9. Maximum as received calorific values will approach 7100 to 7150 Btu/lb. when cleaning at the lowest practical S.G. of 1.60 (17.52 dry-ash). This represents approximately an 800 Btu/lb. increase in heat content versus burning the material raw in an undiluted state when fully cleaning in a wet process. Upgrading could be as much as 1400 Btu/lb. should dilution material extracted with the seam (material of very low calorific content such as ash particles) approach 10 percent. Dry cleaning methods may achieve similar results.

Effects of Total Cleaning

Figure 4.2.10 graphically depicts the effects of total cleaning on ash/sulfur removal and Btu recovery for lignite containing zero and 10 percent dilution respectively (Tables 4.2-1 and 4.2-2). It can be seen that sulfur removal and Btu recovery are impacted slightly with addition of diluting material to the coal seam, as it is normally very low in sulfur and calorific value. However, cleaning shows a significantly greater impact on ash removal when dilution is present. This becomes magnified with increasing specific gravity as the nature of most dilution is such that the bulk of the material lies in the highest of gravity zones (2.10). Maximum ash/sulfur reduction of 55/65 percent and 36 percent respectively can be achieved at the lowest attainable S.G. (1.60) while still maintaining Btu recovery in excess of 90 percent. As the S.G. increases, the effects of cleaning diminish although Btu recovery increases.

Effects of Partial Cleaning

Figure 4.2.11 compares full and partial cleaning derived from Table 4.2-3 and their effects on ash/sulfur removal and Btu recovery. While it is recognized that the magnitude of change between the two cleaning approaches will vary with the size of material not cleaned, the discussion is presented to illus-

trate the potential impact. In addition, it is felt that 1/2" is a natural break point when dry screening.

As can be seen, ash/sulfur removal is adversely impacted when partially cleaning the raw coal through all ranges of separating gravities. Btu recovery, however, is enhanced as cleaning always compromises recovery. When partially cleaning at a S.G. of separation of 1.60, an ash/sulfur reduction of 30.5 percent and 14.3 percent respectively can be achieved while maintaining a Btu recovery in excess of 95 percent. This represents a decrease in total ash/sulfur cleaning effectiveness versus total cleaning by as much as 45 percent and 60 percent respectively. A further disadvantage of partial cleaning is its inability to provide a uniform product.

4.2.2.2 Decrepitation Due to Air Drying

Raw Coal Size Distribution

Figure 4.2.12 depicts the generation of fines in the raw coal feed when exposed to air-drying. It can be seen that the weight percentage of 1/4" x 0 fines has increased from 20 percent to 30 percent in as little as 4 days' time. Its softness (+70 Hargrove) would further contribute to the generation of fines through the normal material handling process of the raw coal before cleaning. Expectations of 40 percent 1/4" x 0 fines in the raw feed would not be unreasonable when collectively weighting these two parameters.

Effect on Cleanability

Table 4.2-4 illustrates the effect that increasing exposure to air drying has on ash/sulfur removal and Btu recovery. It can be stated that increased exposure aids in the reduction in ash/sulfur over the gravity ranges investigated, although the spreads in sulfur reduction at varying exposure times may not be that significant. This may result from the liberation of ash/sulfur minerals once the coal degenerates upon drying. This is supported by the obvious reduction in Btu recovery as well as weight yield of clean coal product with time. The yield differential at higher gravities of separation is of significant magnitude to warrant consideration in design of the material balance.

4.2.2.3 Size Reduction Testing

Table 4.2-5 depicts the improvement in coal cleanability with reduction in size. Basically, there is virtually little improvement, if any, in the ability to improve coal cleanability through size reduction. This, coal preparation schemes would favor

coarse feeds to minimize the expensive fines dewatering capacity that is associated with the creation of fine coal feeds when full cleaning is employed in a water medium. In addition, coarser feeds improve the overall cleaning efficiencies for most cleaning schemes. This may also suggest with the exception of the major inseam partings that the ash and sulfur present in this coal are finely disseminated.

4.2.2.4 Whole Coal Analyses/Effect on Combustion

Table 4.2-6 summarizes the whole coal analyses of the raw lignite and two simulated levels of coal cleaning. Pertinent values were used to construct utilization indices shown in Table 4.2-7 from which the potential beneficial effects of coal cleaning could be gauged. Special emphasis was placed on build-up of ash laden particles in the furnace as this appears to have a significant impact on boiler design and management. The values and indices will serve as part of the data base that can be correlated with the combustion testing program and supplemented by values determined from cores from the mine investigation.

As such, the following remarks regarding utilization are offered, recognizing that the limits of the test program essentially define the extent of our presentation:

a. Slagging - Cleaning appears to have a potential negative impact on the ash cleanability and removal in the predominantly radiant heat zone. Ash fusion temperatures indicate a significant reduction in fusion temperatures (200 to 250°F), which results in slagging over larger areas of the boiler. When correlating this fact with the appropriate temperature/viscosity indices, it appears that cleaning at any level shows a progressive reduction in ash viscosity with temperature, which results in stickier ash that is less easily removed. This tends to be supported by the slagging indices which indicate that little improvement and possible deterioration are seen in slagging performance which is characterized as medium-high to high.

b. Fouling - Progressive levels of coal cleaning indicate a greater tendency for the ash to collect on the convection areas of the boiler. This results from the increase in sodium content of the ash with lower S.G. of separation and is reflected in the increased values of the fouling indices.

c. Ash Resistivity - The resistance to collection of fly ash in a precipitator is slightly reduced with lower S.G. of separation (i.e., cleaning). However, the reduction in resistance levels due to cleaning may not have a serious

impact on ash collectability due to the higher overall magnitude of the resistancy values.

d. Hardgrove - Little, if any, impact on pulverizer wear should be expected with coal cleaning as the cleaned indices vary slightly from that of the raw value.

In summary, cleaning appears to adversely affect or do little to improve the coal's utilization over the raw state in the areas investigated.

### 4.2.3 Commercial Cleaning of PMDC Mine No. 2 Seam

This phase of the test program was conducted to assess the behavior of Lakhra coal in a commercial cleaning plant by comparing the data obtained from the test run with that obtained from the theoretical washability study. To accomplish this end, a second 50-ton bulk shipment of PMDC Mine No. 2 seam coal was shipped to the USA for processing. The primary objectives of the test were as follows:

a. Generate a clean coal sample for a second round of combustion testing. Gauge the effectiveness of cleaning with regard to boiler performance by comparing the indices generated from the whole coal analyses of the raw feed and clean coal.

b. Assess the coal's response to wet processing (general cleanability) in regard to percent ash/sulfur removal and Btu recovery. Compare these results with those projected from the Theoretical Washability Study.

Commercial Testing & Engineering Company performed the analytical testing under the supervision of Roberts & Schaefer Company in accordance with appropriate ASTM standards. Presentation of the washability program, procedures and test results are enclosed in Volume IX of this report.

It is worthy to note that the test run was conducted with the major inseam parting contained within the raw coal feed. As such, it became necessary to adjust the theoretical clean coal washability analysis by its percentage contribution to the total raw coal to permit proper comparison between projected and actual run values regarding coal cleanability. Since this percentage approaches 10 percent, the run values were compared against those values shown in Table 4.2-2, Total Cleaning Seam Plus 10 Percent Dilution.

### 4.2.3.1 Plant Selection/Test Run Details

Plant Selection/Description

Selection of the plant type suitable for beneficiation of the raw coal was dictated largely by the relatively small tonnage (by commercial standards) available to process. Investigation of jig facilities indicated that far greater tonnages would be necessary to permit bedding of the jig units and subsequent stabilization of the run for high separation efficiencies. In addition, it was uncertain whether the separating gravity could be controlled as closely as desired. For these reasons, a heavy medium system was chosen as the method of cleaning as it has an inherent ability to circumvent these concerns when operating at even the lowest raw coal feed rates.

Figure 4.2.13 depicts the flow scheme of East Fairfield Coal Company's heavy media cyclone plant chosen to conduct the test run. The method of cleaning is regarded as a feed-to-zero type as the entire raw feed is processed through the cyclones without the need for removal of the -28 mesh fines as with conventional heavy media processes. A plant of this nature is capable of cleaning and recovering coal values down to a nominal 100 mesh size. The processing rate for this particular plant is 250 TPH at 2-1/2" topsize.

Test Run Details

The test run was conducted over the two-day interval of May 28 and 29, 1985. A large portion of the first day was devoted to plant and sampling station setup as well as general cleanup. During that evening, the raw coal hopper was hand-charged with the lignite from the shipment containers, with 50 bags held in reserve for special testing to be conducted by others at a later date.

Day Two commenced at 8:45 a.m., with the crushing of the projected plant feed to a topsize of 2-1/2" nominal. The comminuted material was subsequently run into two tandems to permit weighing prior to the test run and to prevent ground contamination by foreign coal when feeding the plant. During this two-hour period, samples were taken and stored in plastic-lined steel drums. It is worthy to note that this particular sample was taken prior to the start of the actual test run to ensure an uninterrupted test period. Details of the samples procured and their locations are outlined in Table 4.2-8 and in Figure 4.2.13, respectively.

The actual plant run commenced at approximately 4:00 p.m., and was viewed by the following parties:

| | |
|---|---|
| Gilbert/Commonwealth | - Lyle Thornton |
| John T. Boyd | - Jim Schaeffer<br>Jack Ligday |
| WAPDA | - Iftikhar-Ud-Din<br>Maqsood Butt |

It was conducted in two segments to permit replacement of the depleted feed tandem with that of the second. This served an additional purpose of permitting the setting and checking of the medium gravity prior to the start and completion of each test segment. Gravity readings were as follows:

| | | |
|---|---|---|
| First: | Start | - 1.62 |
| | Finish | - 1.68 |
| Second: | Start | - 1.62 |
| | Finish | - 1.68 |

Upon completion of the first segment, the heavy medium was cleansed to permit its adjustment to the level obtained at the commencement of the test program. In this way, it was hoped that the gravity of separation could be controlled at the overall level of 1.75 to 1.80.

The actual test run and sampling took approximately 80 minutes to complete. It was viewed largely as a continuous run without major interruptions. However, a slight delay was experienced when pluggage of the coarse clean coal dryer occurred. This was attributed to the accumulation of the jute bag fibers used to package and ship the raw lignite in the screen basket. To alleviate this situation, water was introduced with the feed to each dryer to ensure its proper operation. The remaining portion of the test program went without interruption and in a manner typical of commercial plant operation. To permit a mass balance about the plant, the coarse refuse and clean coal were collected in tandems and weighted. The two tandems containing the cleaned coal were subsequently tarped and shipped to Combustion Engineering for burn testing. All test activities ended at approximately 6:30 p.m.

Run observations indicate that a significant amount of fines were generated from the raw feed. This was primarily due to the degradation of the major inseam parting, which is clay-based and the coal/ash material that is earthy in nature. This was supported by a lower-than-expected clean coal and coarse refuse yield, a slimy-coaly coating of the clean coal and an elevated medium gravity of 1.68 after the end of each test segment. The clay-laden nature of these fines made their

dewatering through vacuum filtration difficult. This was verified through conversations with the plant operator on the day following the test run.

While these observations are significant, it should be understood that they are not insurmountable or uncommon in the area of lignite beneficiation. For the most part, the cleaned coal maintained a reasonable degree of size consistency and dispels any initial thoughts about its total disintegration upon contact with water. What is important is that the generation of fines be properly addressed in any wet beneficiation scheme.

4.2.3.2 Results

Gravity of Separation/Efficiency

Figure 4.2.14 depicts the test run distribution plot of raw coal for the plus 28 mesh size fraction obtained from Table 4.2-9 when cleaned in the heavy media cyclone. The gravity of separation of 1.87 represents the gravity by which the theoretical versus actual coal cleanability will be gauged since recovery of values below this size fraction will not greatly alter this finding.

In general, the separating gravity exceeded the target range of 1.75 to 1.80 by 0.07 gravity units. This was due principally to the degradation of fines that resulted in the elevation of the gravity set-point during both segments of the plant test (see Section 4.2.3.1 above). The separating efficiency of 0.065, which depicts the general slope of the distribution curve and subsequent cleaning efficiency, is considered acceptable for this type cleaning method, although somewhat higher than expected when considering the relatively low raw coal cleaning rate for the plant's rated cleaning capacity. This could be improved by proper design.

Whole Coal Analyses/Effect on Combustion

Table 4.2-10 summarizes the whole coal analyses of the raw and cleaned lignite. Pertinent values were used to construct the indices shown in Table 4.2-11. They indicate that cleaning has a potential deleterious effect on boiler slagging and fouling characteristics, which supports those findings established in the theoretical washability study. The actual indices established from the test run fall between the cleaned values shown in Table 4.2-7. This may suggest that the values will vary with sample location but fall within an established range. The Hargrove again parallels the theoretical values and supports the same conclusion drawn earlier.

### 4.2.3.3 Cleaning Comparison/Commercial Versus Theoretical

Mass Balance/Btu Recovery

Table 4.2-12 presents the mass balance measurements and Btu recovery determinations. Based on a gravity of separation of 1.87, the projected Btu recovery and clean coal yield determined from Table 4.2-2 are 97 percent and 79.45 percent, respectively. Actual values determined from the plant run of 91.5 percent and 71.7 percent fall short of the projected values by 5.5 percent and 7.75 percent, respectively. This is largely attributed to the breakdown of coal particles within the plant (fines generation) and, to a lesser extent, to errors associated in the laboratory determination of the moisture and yield analyses. In addition, the inherent variability associated with lignite coal may also be a contributing factor.

Percent Ash/Sulfur Removal/Btu Enhancement

When operating at 1.87 gravity of separation, the projected ash and sulfur removal for the lignite coal is 43.5 percent and 25.5 percent respectively. Actual values determined from the plant run of 41.3 percent and 18.37 percent, respectively, indicate that the projected values would slightly overstate the cleaning values expected from a commercial cleaning plant. This would be more fully explained by the variability of the lignite seam than differences caused by particle degradation.

Cleaning improved calorific value over the raw state by 1160 Btu/lb. Again, this is slightly lower than projected but demonstrates that any gain in total moisture due to cleaning will be offset by reduction in the total product ash.

Summary

In summary, utilization indices generated from the theoretical whole coal analyses are an effective tool for predicting the general response that commercial scale cleaning would have on the resultant fuel's performance in a boiler.

Cleanability correlations, however, should be supplemented by core data where variability of quality is expected (percent ash/sulfur removal) and actual plant test values where particle degradation affects the yield and Btu recovery of the clean coal product.

## 4.3 FUEL SAMPLE COLLECTION AND SHIPMENT

The combustion testing program for the Lakhra Project required that three bulk samples of lignite be collected, packaged and shipped to the United States. The first sample consisted of 50 U.S. tons of Lakhra lignite from the generating PMDC Mine No. 2. This sample was used for baseline combustion testing. The second sample, also 50 U.S. tons in size, was taken from PMDC Mine No. 2 and was washed in a commercial heavy media cyclone type preparation plant in the USA prior to combustion testing as a washed coal sample. The third sample was collected from the test shaft installed by PMDC adjacent to the BT-11 core boring within the 52 square kilometer lease area. This sample was 17.5 U.S. tons in size and was combustion tested as a confirmatory sample to check any differences in combustion characteristics of lease area coal against the Lakhra coal taken from the operating PMDC Mine No. 2.

### 4.3.1 Shipping Arrangements

The quantity of coal to be shipped dictated that the only economically feasible method was to use surface rather than air freight. Initial contacts with shippers indicated that air freight would be approximately 10 to 15 times the cost of surface freight for this cargo. Shippers in the Port of Karachi area were contacted regarding rates and schedules. During the process of contacting shippers, it was determined that the only American-owned shipping line which serves the Port of Karachi is the American President Lines. Since USAID contract provisions require the use of American shippers, it was agreed that American President Lines (APL) would be used as the shipper for the coal sample.

An initial meeting was held on January 20, 1985, with APL to discuss the detailed arrangements that would be required to ensure that coal samples would not be subject to exposure, degradation and potential spontaneous combustion during the trip to the USA, which was estimated to take between 6 and 8 weeks. APL is a containerized cargo carrier, and they reviewed briefly how this type of system would be used to handle the consignment. The cargo containers used by APL are 20 feet long, 8 feet wide and 8 feet high. They have an interior volume of 1,158 cu. ft. and a maximum rated net weight of 47,510 lbs. These containers are designed to be transportable by truck, rail or ship. It was agreed that three containers would be necessary for the large 50 ton consignments and that the containers could be taken directly to the sample collection sites and loaded there to minimize handling of the coal. When the coal reached the USA, these same containers would be unloaded from the transpacific ship and sent to the APL east coast terminal

in South Kearney, New Jersey, by rail. The containers could then be placed on trucks and transported to their final destination. It was determined that the concept of using the same cargo container for transport from the mine to the testing facility would work well for the shipping of this coal sample in that it avoids excessive rehandling of the material and helps to assure that the coal arrives at its destination in as close to an "as mined" condition as possible.

At the same meeting, it was resolved that a local trucking firm familiar to APL would be used to move the containers to the mine site and provide the labor necessary for loading the coal. The firm of Dawood Khamisa and Sons was contracted for this purpose. Personnel from Khamisa and Sons, APL, GC II, PMDC and Roberts & Schaefer Company visited PMDC Mine No. 2 on January 21, 1985 to confirm final arrangements for the first sample to be collected, and discuss the schedule with the PMDC supervisory staff that would be overseeing the mining of the coal sample. When this inspection was made, it was determined that the long bed trucks carrying the cargo containers could safely be brought to the head of the paved road which is approximately 6 kilometers from the mine. Smaller flat bed trucks would have to be used to move the coal from the mine to the paved road. A total of five trucks were used to carry out the loading operation for the first sample. There were the three long bed trucks carrying the cargo containers and two small flat bed trucks for bringing coal out from the mine area. A crew of 15 laborers was planned to carry out the loading operation.

### 4.3.2 Collection and Packaging Procedures

In planning for the collection procedure to be used for the combustion test samples, consideration had to be given to the mining methods being used, the limitations of lifting and hauling coal in the mine area and adequate protection of the sample.

The standard method of removing coal from the mine at PMDC No. 2 is to load jute bags of approximately 100 kg capacity at the mine face and bring them to the surface via a track cart and winch where the coal is stacked out manually. The bags are then sent back into the mine to be refilled. It was agreed that the same basic procedure could be used to collect the sample; however, care had to be taken to ensure that the coal remained in as close to an "as mined" condition as possible. The main concerns were moisture loss and degradation of the coal.

It was decided that sufficient jute bags should be procured to allow the collected coal sample to remain bagged when it was

stockpiled at the surface. The trucker who would load the coal would supply a like number of moisture-proof plastic bags so that each jute bag could be placed into a plastic bag and sealed to prevent moisture loss before it was loaded out on the trucks. Heavy duty packaging tape would be used to seal the bags. In order to ensure that plastic bags of adequate size could be procured, it was decided to limit the quantity of coal in each jute bag to 50 kg. This limitation would also make it easier to manually handle and pack the bags in the cargo containers. The 50 U.S. tons of coal that would be required equated to approximately 45 metric tons; thus it was determined that at least 900 jute bags and plastic bags would have to be purchased. The jute bags were readily available in Hyderabad; however, the plastic bags presented more of a problem. It was agreed that the trucker would be responsible for procuring the plastic bags and sealing tape in Karachi and bringing them to the mine.

The coordination of the mining and the trucking activities plus the duration of the mining effort meant that at least a part of the sample could be stacked out on the ground for one day or possibly longer before being sealed in the plastic bags. To prevent exposure to sun and wind, canvas tarps were procured to completely cover the sample bags. It was also agreed that PMDC would have water available to wet down the jute bags as they were stacked out. The sample bags would then immediately be covered by the tarps.

### 4.3.3 Observations - Sample Number 1

The packaging and shipping procedures discussed above were used for the first time on January 23, 1985, when collection of the Combustion Test Sample Number 1 was begun. GCII and Roberts & Schaefer provided supervision of the sample collection and packaging. The actual collection of the sample proceeded quite smoothly and in much less time than anticipated. Mining of the sample began at approximately 12:00 p.m. on January 23 and was completed by about 11:00 a.m. the following morning. Cross-sections of the coal seams at the sample area and a map of the sample location within the mine are attached. The trucker arrived on-site at approximately 10:30 a.m. on January 24 to start loading out the sample, thus the sample was stacked out for a very short time. Periodically throughout the day, the bags under the protective tarps were inspected and found to still be damp.

The plastic bags purchased by the trucker were reinforced 50 kg moisture-proof fertilizer bags. In addition, membrane type plastic bags were purchased to serve as inner liners for the reinforced bags. The combination of bags worked quite well to

provide a sealed moisture barrier; however, they were not large enough to contain the jute bags even when loaded to only 50 kg. It was quickly determined that each jute bag would have to be emptied into a corresponding plastic bag. The plastic bag would then be sealed with packaging tape and replaced into the same jute bag that it came from. This step was important because it had been decided to bag the coal and the seam partings separately in the mine and identify the bags containing the partings with a large X. This procedure was also determined to be beneficial in that the coal was contained directly in moisture-proof plastic and the jute bag provided extra protection for handling and stacking.

All 900 bags were sealed and loaded into the shipping containers by nightfall on January 24. The container trucks were then moved to Karachi on the 25th for ship loading on the 26th.

The bulk sample of coal was taken from the same location in PMDC Mine No. 2 as the channel sample that was taken by the J. T. Boyd Company earlier in January. Consideration was given to obtaining a separate laboratory sample that would be sealed at the mine head and shipped separately while the actual bulk sample was being mined. It was decided, however, that the Boyd sample would be adequate to serve as the control laboratory sample since it came from the same location.

A 3 ton portion of the sample was mined in channel fashion and bagged separately from the main portion of the sample. This sample was used for a bulk sink/float test run in the USA to provide basic information for the washability analysis which was conducted by the Roberts & Schaefer Company. The 60 bags containing the bulk washability sample were marked with a horizontal band of packaging tape around the exterior jute bags.

The first sample departed from Karachi on January 29, 1985. The sample was received and unloaded at the KDL Facility of Combustion Engineering Corporation in Windsor, Connecticut, on March 26, 1985.

### 4.3.4 Observations - Sample No. 2

The sample collection procedures and shipping arrangements as discussed in Sections 4.3.1 and 4.3.2 were followed for the second combustion test bulk sample of coal with the one revision that coal was removed from the jute bags and sealed directly in the moisture-proof plastic bags as was done during the collection of the first sample.

The mining of the second sample was started on March 24, 1985. As with the first sample, a total of 900, 50 kg bags were col-

lected and packed into three APL cargo containers. The sample collection was completed at 6:00 p.m. on March 25. The sample was packed in plastic bags during the morning of March 26 and shipped to Karachi that afternoon. During the time that the coal was stacked on the ground in jute bags, the sample was kept covered with tarps. The moisture of the jute bags was monitored by GCII and PMDC personnel who were supervising the test, and water was sprinkled on the bags as required to promote moisture retention in the coal sample.

A channel sample of coal in the area of the main sample collection was taken on March 25. This sample was packed in sealed plastic drums and shipped via air freight to the USA for analysis. A seam cross section and mine map showing the location of the sample within PMDC Mine No. 2 is attached.

Since bulk sample No. 2 was to be washed in a commercial preparation plant prior to combustion testing, no effort was made to segregate coal from in seam partings. The sample was collected and bagged in an "as mined" condition to provide feed material for the preparation plant.

The second bulk sample departed from Karachi on March 30, 1985. The sample arrived at the coal preparation plant owned by East Fairfield Coal Company in Youngstown, Ohio, on May 28, 1985.

### 4.3.5 Observations - Sample Number 3

The third combustion testing bulk sample was collected from the test shaft adjacent to borehole BT-11 starting on May 26, 1985. This sample consisted of 17.5 U.S. tons of coal or 320 50 kg bags. The same methods of packaging and shipment were used for this coal that were employed for the earlier samples taken from the operating PMDC Mine No. 2. Due to the smaller quantity involved, a single cargo container was adequate for this shipment. The collection of this sample was also supervised by both GCII and PMDC personnel. Sample collection was completed on May 29, 1985.

The sample was packed into the cargo container on May 30 and shipped to Karachi. Due to the slower rate of sample collection encountered at the test shaft, the sample was transferred from the jute bags to sealed plastic bags in two stages. The first 110 bags of coal were transferred to the plastic bags and sealed on the morning of May 28. The remaining bags were packed and sealed on May 30 prior to departure for Karachi. As with the earlier samples, the bags of coal were kept covered with tarps and moistened prior to being sealed in plastic.

During the collection of Sample No. 3, significant attention to the identification of the bags of coal was required. Where-

as the coal at PMDC Mine No. 2 was removed from one thick seam approximately 10 feet thick with relatively minor partings, the BT-11 test shaft intersects five intervals of Seams 1 and 2 with the interval thicknesses varying between 1 and 5 feet. The coal removed for the sample was taken based on a proportional split that was established by the J. T. Boyd Company. The proportional split was designed to represent the percentage of the total west reserve area tonnage that each interval/seam represents. The make-up of the total sample is as listed below:

| Seam No. | Interval No. | Depth Top of Coal | Thickness | Tons Collected | No. of Bags |
|---|---|---|---|---|---|
| 2 | 5 | 49.9m | 1.58m | 1.65 | 30 |
| 2 | 4 | 53.4m | 0.71m | 5.50 | 100 |
| 1 | 3 | 60.6m | 1.42m | 4.40 | 80 |
| 1 | 2 | 62.9m | 0.53m | 1.65 | 30 |
| 1 | 1 | 64.4m | 1.58m | 4.40 | 80 |
| TOTAL | | | | 17.60 | 320 |

Each bag of the sample was spray painted with a number to identify which interval/seam it came from. Eight additional bags of roof and floor samples were collected and identified to mark the interval/seam that they were adjacent to.

In order to simulate the manner in which the two seams will be mined and burned in the power plant, coal from intervals 4 and 5 will be segregated and blended to provide the feed material as Seam No. 2 for one test burn. Intervals 1, 2 and 3 will be combined to provide the feed material as Seam No. 1 for the second test burn.

The coal collected for the confirmatory test burns departed from Karachi on June 2, 1985. The sample arrived at the KDL Laboratory in Windsor, Connecticut, on July 23, 1985.

### 4.3.6 Adequacy of Collection and Shipping Methods

The necessity of transporting the large quantity of combustion testing samples via surface freight rather than by air freight dictated that the handling and packing methods used be adequate to protect the sample over a long period of time and through several cargo transfers. The goal was to keep the coal in as close to an "as mined" condition as possible. The potential for moisture loss, degradation and potential spontaneous combustion had to be minimized. The combination of containerized cargo transport and sealing the coal in small capacity, moisture-proof bags accomplished this goal.

Physical observation of the coal when bags from the first sample were opened at the laboratory and a comparison of channel sample

versus bulk sample proximate analysis results confirm that the goal was accomplished. No noticeable degradation or evidence of spontaneous combustion was observed during the unpacking process. The proximate analyses of the channel sample, which was sealed in plastic drums, air freighted to the USA and tested at Standard Laboratories, and the raw coal analysis of the bulk sample, which was performed by Commercial Testing Labs, are very comparable. The two analyses are listed below. Both are on an "as received" basis.

| | Channel Sample | Bulk Sample |
|---|---|---|
| % Moisture | 32.64 | 30.74 |
| % Ash | 20.59 | 21.44 |
| % Sulfur | 4.25 | 3.57 |
| Btu/lb | 5,961 | 5,893 |

**Gilbert/Commonwealth**
209 E Washington Avenue Jackson MI 49201

## CALCULATION SHEET

REV.

| | | |
|---|---|---|
| CLIENT OWNER | [illegible] AIC/WA[illegible]A<br>[illegible] PROJECT<br>FEASIBILITY STUDY | FILING CODE<br>JOB NO. |
| CALC. BY/DATE (SIGNATURE)<br>CHECKED BY/DATE (SIGNATURE) | SUBJECT<br>[illegible] LOCATION MAP<br>PMDC #[illegible] COAL SAMPLE | SHEET OF<br>BOOK NO. |

[illegible] LOCATION MAP AND SEAM CROSS SECTION
FOR PMDC #2 COAL SAMPLE #[illegible]

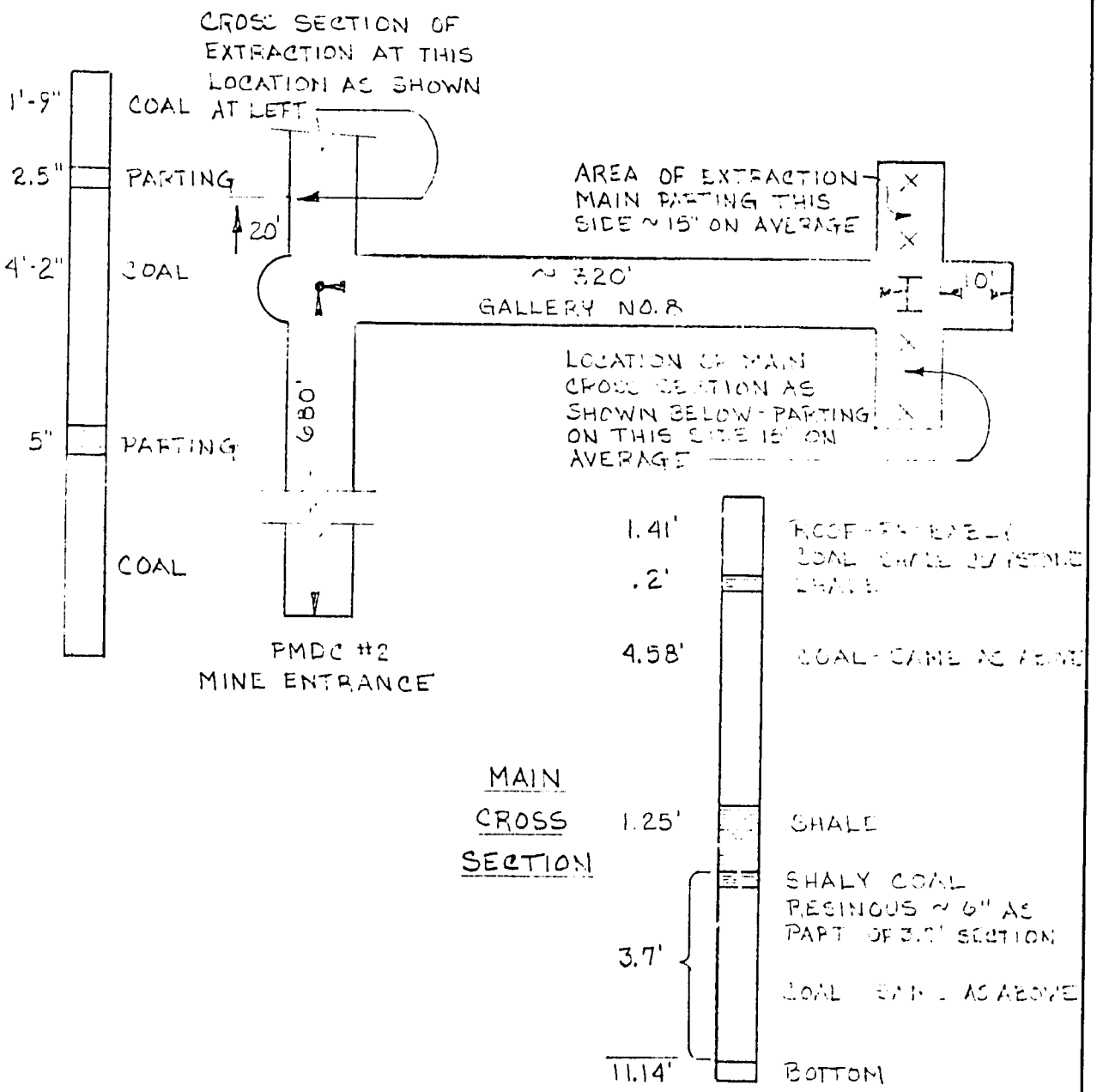


FORM CAI/DCP 112 (9/78)

Gilbert/Commonwealth
209 E. Washington Avenue Jackson MI 49201

CALCULATION SHEET

REV.

| | | |
|---|---|---|
| CLIENT/OWNER USAID/WAPDA LAKHRA POWER PROJECT FEASIBILITY STUDY | | FILING CODE<br>JOB NO. |
| CALC. BY/DATE (SIGNATURE)<br>CHECKED BY/DATE (SIGNATURE) | SUBJECT | SHEET OF<br>BOOK NO. |

LOCATION MAP AND SEAM CROSS SECTION FOR BULK COAL SAMPLE PMDC #2

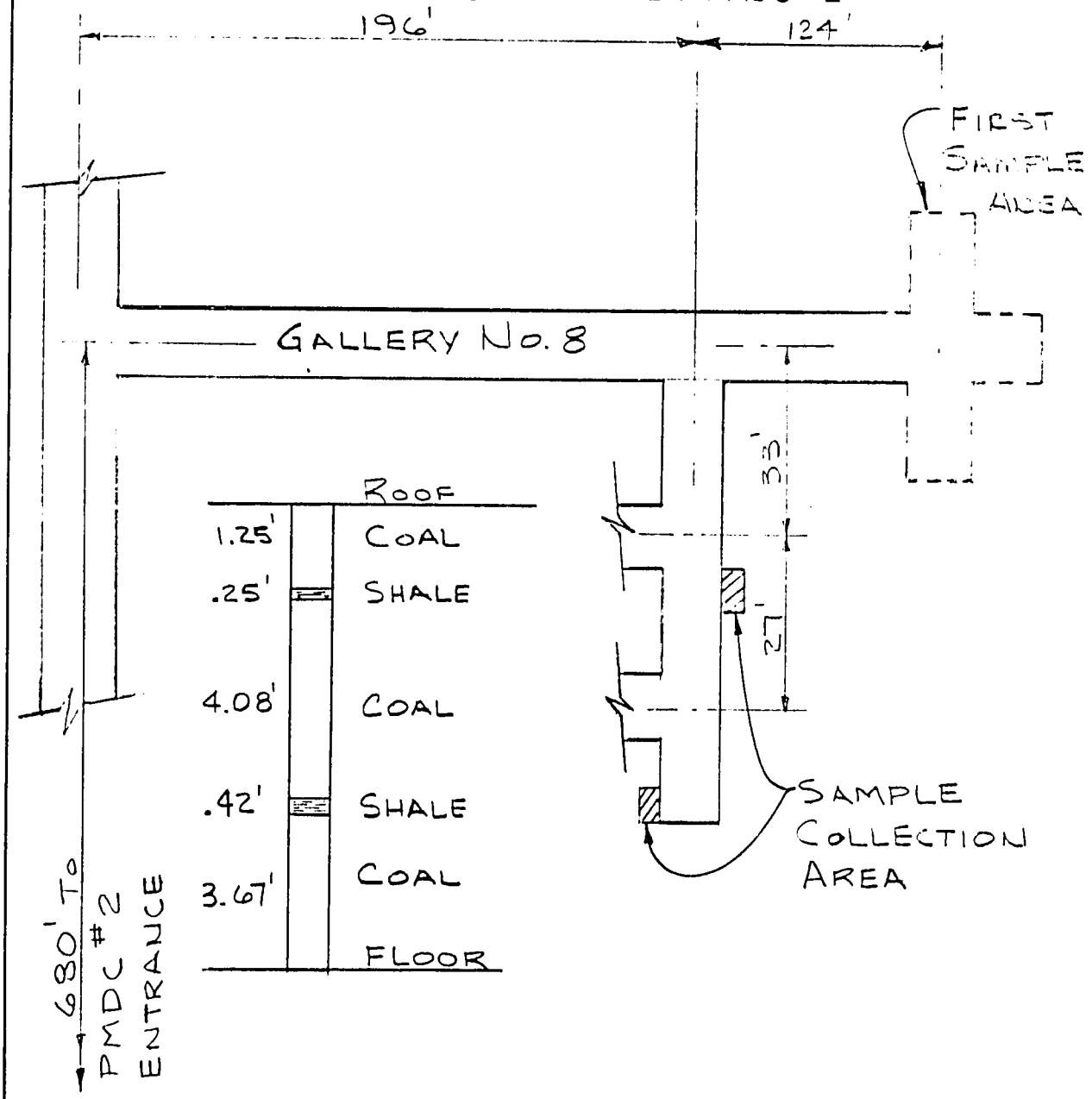


FORM CAI/DCP 112 (9/78)

## 4.4 TEST BURN, BASELINE PMDC NO. 2

The purpose of the combustion testing program was to determine if Lakhra coal could be fired in a utility size steam generation for a 30-year period without significant loss in reliability and availability. If from the test program this was confirmed, then the combustion testing Subcontractor, Combustion Engineering, was to collect pertinent data to help the Subcontractor determine the design parameters for two 350 MW steam generators and auxiliaries to reliably operate over the expected life while firing Lakhra coal.

The base scope of work for Phase I of the testing program consisted of an evaluation of "as mined" (baseline) Lakhra coal from PMDC No. 2 mine. Other tests evaluating washed PMDC No. 2 coal (Phase II test) and bore hole BT-11 test shaft coal (Phase III test) are included in sections 4.5 and 4.6 of this report. A comprehensive bench and pilot scale test program was used to evaluate the Lakhra fuel.

Bench scale fuel characterization was conducted prior to test firing. It included both standard ASTM and special in-house tests developed by Combustion Engineering.

Combustion Engineering's Fireside Performance Test Facility (FPTF) was used to test fire the fuel to evaluate properties which influence fireside boiler performance. A description of the FPTF is included in the final Phase I C.E. Test Burn Report.

<u>Baseline PMDC No. 2 Work Scope</u>

The PMDC No. 2 "baseline" was characterized through evaluation of the following five tasks:

Task 1 Bench-Scale Characterization

- 1.1 Standard ASTM Tests
- 1.2 Special Bench Scale Tests
- 1.3 Data Analysis and Interpretation

Task 2 Pilot-Scale Combustion Performance Testing

- 2.1 Pulverization
- 2.2 Furnace Slagging Characteristics
- 2.3 Convection Fouling Characteristics

2.4 Gaseous and Particulate Emission

Task 3 Pilot-Scale Sample Analysis

Task 4 Pilot-Scale Data Reduction and Interpretation

Task 5 Boiler Design and Performance Prediction

Task 1 Bench-Scale Characterization

1.1 Standard ASTM Tests

Standard ASTM bench-scale analyses typically used for characterization of coals were conducted for the Lakhra coal. Testing was comprised of:

Proximate Analysis

Ultimate Analysis

Higher Heating Value

Ash Fusibility Temperatures (oxidizing and reducing atmosphere)

Ash Composition

Halogens (Cl, F)

Forms of Sulfur

Hardgrove Grindability Index

X-Ray Diffraction (free quartz)

Other tests included:

1.2 Special Bench-Scale Tests

Special bench-scale tests were performed to characterize the properties of the subject fuel. These tests were developed in order to provide more in-depth information on key coal properties.

Flammability Index

Thermo-Gravimetric Analysis

Specific Surface Areas and Densities

Acetic Acid Soluble Alkalis

Gravity Fractionation Analysis

Abrasion Index

Task 2 Combustion Performance Evaluation

Task 2 involved the detailed combustion performance characterization of the Lakhra coal. Comprehensive test firing was conducted in the pilot-scale Fireside Performance Test Facility (FPTF). Testing in this facility provided quantitative measurements of key performance characteristics and provided input for the boiler design parameter study.

The FPTF test work addressed the following areas:

Pulverization

Furnace Slagging/Heat Absorption Rate

Convective Pass Fouling

Gaseous and Particulate Emission

Corrosion Potential

(Descriptions of the above tests are included in the Combustion Engineering Test Burn Report in Volume IX.)

Task 3 FPTF Sample Analysis

This task consists of the bench-scale tests which were performed on selected samples collected during the FPTF testing.

Task 4 FPTF Data Reduction and Interpretation

This task covers the effort required to reduce and interpret the data obtained during the FPTF testing.

Task 5 Engineering Performance Data

Based on the results of the combustion testing the following information was to be provided by Combustion Engineering and are included with their final report to be prepared at the conclusion of all combustion testing:

1. Design parameters for the boiler and auxiliaries.

   a. Net heat input/plan area.

   b. Net heat release rate to the furnace outlet plane.

c. Recommended distance from the top fuel nozzle to the bottom of the first steam cooled wall surface.

d. The excess air required at MCR.

e. Recommended heating surface tubing spacings, and soot blower coverage, arrangement.

f. Recommended design parameters for the mills.

g. Recommended design parameters for the air heaters.

1. Type, hot air requirements, exit gas temperature, average cold end temperature.

h. Recommended design air and gas duct velocities.

i. Recommended fan design criteria.

2. A boiler performance sheet of typical performance data.

3. Suggested performance guarantees based on the performance coal.

4. Comments on the effect of design coal and ash variation.

5. A comparison between a steam generator designed for only Lakhra coal and one designed for dual fuel firing of Lakhra coal and/or fuel oil.

a. Typical sketches of each above alternative.

b. List of additional equipment to support dual firing with oil.

c. Typical motor list to support each alternative.

6. A list of utility size units operating for a minimum of 10 years burning a coal similar to the Lakhra coal.

PRELIMINARY RESULTS FROM CE, (JUNE 1985).

"Preliminary results from the Lakhra baseline coal and corrosion tests are summarized below. The coal was test fired in the Fireside Performance Test Facility (FPTF). The duration of the corrosion test was 256 hours. Overall, preliminary results indicate the Lakhra coal has severe slagging potential. Peak FPTF flame temperature had to

be reduced to 1425°C (2,600°F) for controllable furnace deposits. Convection tube buildup rate was relatively fast, but deposits were weakly bonded and easily cleanable by sootblowing. Corrosion results indicate the austenitic material had very good resistance to corrosion exposure in the FPTF while burning Lakhra coal. Final analysis and data reduction are progressing. Overall results indicate that this fuel can be fired in a properly designed commercial furnace.

Table 4.4-1, CE Run of Mine Combustion Testing, summarizes the bench-scale results of the as-received Lakhra coal. The sulfur content was 6.2 percent (dry) and ash was 36.4 percent (dry). Approximately 93 percent of the sulfur was in pyritic form. The higher heating value was 17.07 MJ/kg (7,340 Btu/lb) (dry). Ash fusibility temperatures ranged from 1082°C (1,980°F) I.T. to 1382°C (2,520°F) F. T. Ash analysis showed the iron content was 17.2 percent. The grindability index of this coal is 71, indicating this coal should be relatively easy to grind.

Pulverization results are in agreement with the bench-scale grindability index indicating the Lakhra coal is relatively easy to pulverize (Table 4.4-2). There was no apparent compaction/pasting potential with this coal. The energy required to grind this coal is 8.4 Kw-hr/tonne (7.6 Kw-hr/ton) of coal in the FPTF pilot scale bowl mill. At a mill capacity of 612 Kg/hr (1,350 lbs/hr), the mill rejection rate was 2.1 percent. This corresponds to a sulfur rejection of 4.8 percent from the pulverized coal.

Table 4.4-3 shows the tests performed in the FPTF during the baseline coal evaluation. A total of eight tests were conducted. Each test was approximately 12 hours in duration. The effects of fuel loading and flame temperature upon combustion/performance on the FPTF were evaluated during these tests.

Overall, from the combustion standpoint, the Lakhra coal was easy to burn. Good intense, stable flame was achieved throughout each of the coal feed rate tests. There were no apparent turndown/flame stability problems observed in the FPTF. The combustion efficiency based on fly ash tracer method indicates better than 99.5 percent carbon burnout in the FPTF (Table 4.4-4).

Furnace slagging was evaluated based on deposit accumulation on the waterwall panel, deposit physical state, deposit overall heat transfer resistance and deposit cleanability.

Deposit cleanability is the most critical parameter as it dictates the capability of maximum continuous loading operation of a boiler. Table 4.4-5 shows the furnace slagging results of the Lakhra baseline coal in the FPTF. Overall, reduction in load slightly reduced the amount of deposit accumulated on the waterwall panel because of the lower ash input. However, flame temperature was the most critical parameter controlling slagging. Furnace deposits were cleanable at a flame temperature up to 1427°C (2,600°F). Above this temperature, deposits were uncontrollable. Waterwall deposits were 12 mm (1/2 inch) thick, highly sintered with the outer layer molten at 1427°C (2,600°F). Deposits were molten and 20 to 25 mm (3/4 to 1 inch) thick above this flame temperature. Throughout each of the test firings, bottom ash accumulation rate was very high, requiring frequent handling.

Table 4.4-6 and Figures 4.4-1 through 8 show the waterwall heat flux monitored throughout each of the test conditions at different elevations above the burner (B and C). Overall, heat flux recovery after sootblowing was better than 90 percent for each of the cases when deposits were effectively removed at FPTF flame temperature of 1427°C (2,600°F). Heat flux recovery was almost nil above this flame temperature. Overall slagging results indicate that this fuel can be fired commercially. Tangentially firing, by virtue of its inherent ability to spread out the flame, should provide lower flame temperatures than highly turbulent wall-fired burners.

Convection fouling was characterized during each of the 8 tests. Results are summarized in Table 4.4-7. Overall, the Lakhra baseline coal exhibited moderate fouling potential. Deposit accumulation rate was relatively high, increasing with gas temperature. Sootblowing was required every 3 to 4 hours at 1282°C (2,340°F), 5 to 6 hours at 1171°C (2,140°F) and 6 to 8 hours at 1121°C (2,050°F). For each of these cases, deposits were easily removable as the deposit to tube bonding strength was less than 5 (numbers below 15 are considered acceptable). During each of these tests, a high deposition rate in the transition section of the furnace was also observed. This high rate was most likely due to the carry-over from the lower furnace.

In addition to the furnace slagging and convective pass fouling evaluations, in-situ fly ash resistivity measurement were conducted. Results are shown in Table 4.4-8. The average fly ash resistivity measured in the FPTF was $1.76 \times 10^{-11}$ ohm-cm at 124°C (255°F) flue gas temperature

with 15 ppm $SO_3$ concentration. This value falls within the typical range and should not present any major problem for electrostatic precipitator collection efficiency. It is also higher compared to the theoretical calculation at a similar $SO_3$ concentration ($10^{-9}$ ohm-cm,). It should be noted that the in-situ fly ash resistivity measurement in the FPTF only provides a relative number and should not be used as an absolute value. Fly ash resistivity is highly dependent on fuel properties, unit design and operating conditions. The in-situ measurements will be compared to bench-scale fly ash resistivity measurements for a more conclusive result.

The Lakhra baseline coal exhibited a relatively high erosion rate. On line erosion measurements were conducted in an especially designed high velocity duct section of the FPTF. Erosion rates as a function of ash loading and gas velocity are summarized in Table 4.4-9. The overall normalized value was 0.46 microns per hour, indicating the erosion rate of this coal is relatively high. This would indicate a relatively low gas velocity in the convective pass to reduce metal wastage; however the low velocity should fall within commercial design practice.

The corrosion test was conducted at Test 8, conditions. Results of the corrosion test show the austenitic materials had very good resistance to corrosion exposure in the FPTF while burning Lakhra coal. This was evident at both metal temperatures, 538°C (1,000°F) and 593°C (1,100°F), in several zones of decreasing flue gas temperature. The limit for T-91 material would be 538°C (1,000°F) while T-22 and T-11 would be appropriate up to 510°C (950°F) maximum temperature. Carbon steel for waterwalls and for other assemblies should be kept below 427°C (800°F) maximum.

Table 4.4-10 contains the results of we ght loss data and estimated penetration per year for various ASTM materials. The latter is calculated using the weight loss data. Although 304 S.S. was not exposed on these probes, the material would give similar results as 347 S.S. This is based on previous comparisons of these materials corrosion studies conducted at Kresisinger Development Laboratory (KDL).

To summarize, preliminary evaluation of the Lakhra baseline coal in the FPTF indicates this coal can be commercially fired in a properly designed furnace. The Lakhra coal was easy to pulverize, requiring relatively low mill power consumption. The abrasiveness can be addressed with proper

mill lining materials. The coal exhibited good combustion and stable flame in the FPTF the severe slagging potential of this coal can be controlled by designing a unit with a sufficiently large radiant section. The moderate fouling potential can be controlled by proper coverage of sootblower in the convective section. The high bottom ash buildup rate can be addressed by proper ash handling equipment. The erosion rate can be reduced by designing commercially acceptable gas velocity in the convective pass. Corrosion can be controlled by using proper material and surface temperature at different gas temperature zones of the unit. In-situ fly ash resistivity measurement from FPTF indicates this coal should not present any major problem for the electrostatic precipitator collection efficiency.

CE's preliminary results from the test burn in their FPTF facility confirmed preliminary observations made from study of coal and mineral analyses, that Lakhra fuel will require a specific conservative design of the stream generator to result in a unit with long life, high reliability and availability."

## 4.5 TEST BURN, WASHED PMDC NO. 2

The objective of the washed PMDC No. 2 (Phase II) test was to compare the combustion characteristics of baseline and washed Lakhra coals, and to evaluate the improvement, if any, of washed coal on power plant performance. The work scope under this test as listed below was the same as for baseline coal with the exception of eliminating the corrosion potential test:

Task 1 Bench-Scale Characterization

- 1.1 Standard ASTM Tests
- 1.2 Special Bench Scale Tests
- 1.3 Data Analysis and Interpretation

Task 2 Pilot-Scale Combustion Performance Testing

- 2.1 Pulverization
- 2.2 Furnace Slagging Characteristics
- 2.3 Convection Fouling Characteristics
- 2.4 Gaseous and Particulate Emission

Task 3 Pilot-Scale Sample Analysis

Task 4 Pilot-Scale Date Reduction and Interpretation

Task 5 Boiler Design and Performance Prediction

Results obtained from Phase II testing were compared on a one to one basis with the baseline coal Phase I testing to determine if there were any benefits from the combustion performance standpoint for the washed Lakhra coal.

PRELIMINARY RESULTS FROM CE (JULY, 1985)

"Preliminary bench scale results indicate there was reduction in ash (19 percent dry) and sulfur (4.7 percent dry) contents compared to the baseline coal (36.4 and 6.1 percent dry, respectively). However, ash fusibility temperatures and ash composition of the washed coal remained similar to the baseline coal. Test firing of the Lakhra washed coal in the Fireside Performance Test Facility (FPTF) was conducted during the week of June 17, 1985. Results show this fuel exhibits similar performance characteristics to the baseline coal. It has a severe

slagging potential,and moderate fouling potential. Ash slagging was controllable at FPTF flame temperatures of 1427°C-1443°C (2,600-2,630°F). Convection tube deposit buildup rate was slightly lower than the baseline coal. Sootblowing was required after 4 to 6 hours compared to 3 to 4 hours for the baseline coal. Deposit to tube bonding strength remained low and similar to the baseline, consequently removal of deposits was easily accomplished by sootblowing. Deposit samples are currently undergoing further analysis and data reduction is progressing on schedule.

Table 4.5-1, CE Cleaned Coal Combustion Testing, summarizes the bench-scale results of the as-received Lakhra baseline and washed coals. Lakhra washed coal showed reduction in ash and sulfur content; however, ash composition and fusibility temperatures remained generally unchanged. The ash content for the washed coal was approximately one-half of the baseline, 19.1 vs. 36.4 percent (dry basis) respectively. Sulfur and pyritic sulfur content was similarly reduced by coal cleaning. The washed coal had 4.7 percent sulfur content (dry basis), one-half of it present as pyritic sulfur, whereas the baseline coal contained 6.1 percent sulfur, 93 percent of it being in pyritic form. Higher heating value increased by one-third on a dry basis due to the reduction in ash content. Ash composition remained approximately the same for the two coals. Iron content remained high at 19.3 percent compared to 17.2 percent of the baseline coal. Ash fusibility temperature ranged from 1116°C (2,040°F) IDT to 1337°C (2,440°F) FT for the washed coal. This was within the range found for the baseline coal. The grindability indices for the coals were 67 and 71 for washed and baseline respectively. Both coals' HGI's indicate that they should be relatively easy to grind.

The overall pulverization characteristics of washed coal was similar to the baseline coal. Both were easy to pulverize. Mill power requirement in the FPTF bowl mill was 7.8 Kw-hr/tonne (7.1 Kw-hr/ton) for the washed coal compared to 8.4 Kw-Hr/tonne (7.6 kw-hr/ton) for the baseline coal. However, on a per heat input basis, power consumption decreased with the washed coal, .31 vs. .49 kw-hr/GJ (.33 vs. .52 kw-hr/$10^6$ Btu) (dry) due to its higher heating value. The mill reject rate at 612 Kg/hr (1,350 lb/hr) was lower than that for the baseline coal, 0.8 percent vs. 2.1 percent respectively. This decline in reject can be attributed to the decrease in ash and pyrite content.

Six tests consisting of 12 hour waterwall cleanability cycles were conducted in the FPTF (Table 4.5-3). Test

conditions were established based on the Lakhra baseline coal results. Effects of flame temperature at a 3.1 GJ/hr (2.92 $10^6$ Btu/hr) firing rate on combustion and performance in the FPTF were evaluated during tests.

The combustion characteristics during each of the Lakhra washed coal tests were good. Good intense stable flame was obtained, indicating there should be no potential turndown/stability problems firing this coal. Combustion efficiency indicated better than 99.7 percent carbon burnout in the FPTF using the ash-tracer method (Table 4.5-4).

Slagging characteristics of the washed coal were highly dependent on furnace temperatures. Radiant section waterwall deposits were evaluated during each test at different flame temperatures with the objective of establishing the maximum or "critical" furnace conditions at which deposits are still cleanable by sootblowing. Results indicate the maximum or "critical" furnace conditions at which deposits could be effectively cleaned by sootblower corresponds to a flame temperature range of 1427°C (2,600°F) to 1443°C (2,630°F) (Table 4.5-5). At 1454°C (2,650°F) deposits were molten and 3 to 12 mm (1/8 to 1/2 inch) thick. They were unremovable and exhibited poor cleanability. Deposits formed at 1427 to 1443°C (2,600 to 2,630°F) were similar in thickness but were highly sintered with a molten outer layer. These deposits were removable and had good to marginal cleanability. Deposits formed with flame temperatures of 1382 to 1410°C (2,520 to 2,570°F) were highly sintered 3 to 12 mm (1/8 to 1/2 inch) thick and exhibited good cleanability. Bottom ash accumulation rates were high, requiring frequent handling; however, it was significantly lower compared to the baseline coal.

The effects of deposits on waterwall heat transfer were continuously monitored by the heat flux through waterwall panels at two elevations (Table 4.5-6 and Figures 4.5-1 to 6). Heat flux recovery after sootblowing was better than 90 percent for each of the cases when deposits were effectively removed at FPTF flame temperatures up to 1443°C (2,630°F). Heat flux recovery at temperatures above 1443°C (2,630°F) was at best 50 percent exhibiting partially unremovable deposits. Overall slagging results indicate that both the washed and baseline coals exhibited severe slagging potential.

Convection pass fouling was primarily assessed by determining the convective deposit cleanability (bonding strength measurements) and deposit build-up rate.

Deposit cleanability was good for Lakhra baseline and washed coals with the washed coal having a slightly lower accumulation rate. Based on the test results, Lakhra washed coal exhibited moderate fouling potential (Table 4.5-7). Although deposit accumulation rate was slightly lower compared to the baseline, it remained moderate to high over the temperature range tested 1154 to 1238°C (2,110 to 2,260°F). Deposition occurred rapidly with 75-100 mm (3-4 inch) deposits building up in 4 to 6 hours compared to the baseline 3 to 4 hours. Despite the deposit build-up rate, deposits were easily removable and caused no operating difficulty in the FPTF.

Deposit bonding strength was less than 5 (values less than 15 are considered acceptable by commercial sootblowing). The majority of ash build-up occurred in duct I 1154°C (2110°F) and the transition section 1277°C (2,330°F). This is due to carryover from the lower furnace. Overall the fouling characteristics of Lakhra washed were similar to baseline results showing moderate fouling potential.

In addition to the furnace slagging of convective pass fouling evaluation, in-situ fly ash resistivity was measured. Results are shown in Table 4.5-8. The average fly ash resistivity measured in the FPTF was $7.6 \times 10^{-11}$ ohm-cm at 153°C (308°F) flue gas temperature with 3 ppm $SO_3$ concentration. This value falls within the typical range and should not present any major problem for electrostatic precipitator collection efficiency. It is also higher compared to the theoretical calculation at a similar $SO_3$ concentration ($10^{-9}$ ohm-cm). It should be noted that the in-situ fly ash resistivity measurement in the FPTF only provides a relative number and should not be used as an absolute value. Fly ash resistivity is highly dependent on fuel properties, unit design and operating conditions. The in-situ measurments will be compared to bench-scale fly ash resistivity measurements for a more conclusive result."

CE's conclusions of burning washed coal versus burning run-of-mine coal from Lakhra are:

- Ash content was reduced but the characteristics of the ash were not changed.
- Washed Lakhra coal exhibited a slagging behavior almost identical to the unwashed coal.
- The critical furnace temperature remained at 2,600°F where ash deposits remained fluid and were cleanable.

- The rate of deposit buildup on the waterwall panel was slightly lower as a result of reduced ash loading with washed coal.

- The physical state of deposits for burning washed coal did not differ from that for burning unwashed coal.

- The fouling characteristics of washed coal were similar to unwashed coal with a lower accumulation rate due to the lowered ash loading.

- A boiler designed for washed Lakhra coal will not differ from a boiler designed for unwashed Lakhra coal.

## 4.6 TEST BURN, BT-11 TEST SHAFT

GCII visited CE's KDL facility during the test burns of Seams 2 and 1 coal samples from the test shaft at BT-11. CE's preliminary observations were that the quality of Seam 2 indicated higher ash and sulfur content than Seam 1, which in turn had higher ash and sulfur than PMDC No. 2 baseline coal. CE stated they see no surprises from the Phase III test burns from what was learned in the Phase I and II test burns. The furnace and boiler design parameters would not change for PMDC lease area coals versus PMDC No. 2 baseline or washed coals.

CE specifically stated the following:

SUMMARY OF LAKHRA BASELINE, WASHED,
AND BT-11 COALS PERFORMANCE CHARACTERISTICS

"Enclosed is a table [Table 4.6-1] summarizing the key performance characteristics of the Lakhra baseline, washed, BT-11 seams 1 and 2 coals. Data were obtained during test firing for each coal in the Fireside Performance Test Facility (FPTF). Preliminary results indicate all Lakhra coals exhibit similar severe slagging potential. The BT-11 seams 1 and 2 were slightly worse, while the washed was slightly better than the baseline. The fouling potential of these coals was moderate. Convective pass deposits accumulated at relatively rapid rates, but they were weakly bonded to the tubes and easily cleanable by sootblowing. The rate of convective tube deposit buildup was highest with the BT-11 seam 2. BT-11 seam 1 was slightly lower, but higher than the washed and baseline coals.

Pulverization characteristics of these coals were generally similar. All four coals were easy to grind. The energy required per ton to pulverize in the FPTF bowl mill was lowest with the BT-11 seam 2, followed by the washed coal, the BT-11 seam 1, and the baseline coal. However, on a per million Btu basis, the grinding energy required was similar for the BT-11 seams and the baseline coal, but it was significantly lower with the washed coal. This is due to the reduction in fuel throughput associated with increased higher heating value of the washed coal. The abrasion index of the washed coal was significantly lower compared to the baseline coal. The BT-11 seam 1 is expected to be similar to the baseline coal and the BT-11 seam 2 slightly worse due to its higher ash content. Based upon these results, the relative mill wear should decrease significantly with the washed coal and should be slightly worse with the BT-11 seam 2 compared to the baseline coal and BT-11 seam 1.

Ash slagging characteristics of the Lakhra coals were highly dependent on furnace temperatures. The critical flame temper-

ature established for cleanable deposits is 1,425°C (2,600°F) for the baseline and washed coals 1,410°C (2,570°F) for the BT-11 seams 1 and 2. Waterwall deposits developed at these temperatures were highly sintered with molten outer layers. Deposits formed from the washed coal were generally thinner, 9.5mm to 12.7mm (3/8" to 1/2"), compared to the baseline coal and BT-11 seams, 12.7mm (1/2").

The impact of waterwall deposits on heat transfer was consistent with the above results. The heat flux reduction after 12 hours was similar between the baseline coal and BT-11 seams 1 and 2. The washed coal was slightly lower reflecting the slightly thinner deposits formed on the waterwall panels.

Ash fouling potential was moderate for all coals. Convection deposit accumulation was relatively rapid, but deposit to tube bonding strengths were low (less than 2), thus deposits were easily cleanable by sootblowing for each coal. Deposit buildup rate was most rapid with BT-11 seam 2, slightly less with BT-11 seam 1, and less with baseline and washed coals. Sootblowing requirements were every 3 to 4 hours for BT-11 seam 2, 4 to 5 hours for BT-11 seam 1, 5 to 6 hours for baseline coal and 6 hours for washed coal at gas temperature range of 1,150°C-1,170°C (2,100°F-2,140°F).

In-situ fly ash resistivity results were 1.76x10", 7.6x10" and $5.48 \times 10^{10}$ ohm-cm for the baseline coal, washed coal and BT-11 seam 1, respectively. These measurements indicate fly ash generated from BT-11 seam 1 would be easier to collect than from the baseline coal, and the washed coal would be less collectable. Results are attributed to the higher sulfur contents in the BT-11 seam 1 coal which tended to result in higher $SO_3$ and $SO_2$ concentration in the flue gas.

Fly ash erosion data are being processed for the washed and BT-11 coals. Data obtained from the baseline coal indicate a relatively high erosion rate. Based on the bench-scale analyses, the washed coal should have lower erosion (less ash) and the BT-11 (more ash) should be slightly higher than the baseline coal. The high erosion should be controllable with low convective pass gas velocities.

Corrosion results with the baseline coal indicate the aurenitic alloys exhibited very good corrosion resistance. Carbon steel and ferritic alloy exhibited high corrosion at convective pass metal temperature but should prove adequate for waterwalls below 425°C (800°F). On a comparison basis, the washed coal should exhibit lower corrosion potential due to its lower sulfur content and similar overall ash quality. The BT-11 coals should exhibit slightly higher corrosion potential due to their higher sulfur content.

In summary, evaluation of the FPTF results are in agreement with typical assessment made from the bench-scale analysis (Table 4.5-2). The pilot scale FPTF results provide considerable confidence for performance predictions. The lower quality of the BT-11 coals resulted in slightly worse slagging and fouling characteristics than the baseline coal. The washed coal reduced ash and sulfur levels, but the ash quality was not changed significantly. Ash reduction lowered ash handling but the slagging and fouling characteristics remained similar to the baseline coal. These differences can be properly addressed for a successful utility furnace design to fire the Lakhra baseline, washed, and BT-11 coals."

The conclusions of the combustion test program can be summarized as follows:

- The quality of Lakhra coals is suitable for use as fuel in two 350 MW steam generators.

- The design specification parameters for a Lakhra fueled boiler do not vary for baseline, washed or BT-11 coals.

- The selection of the boiler and its auxiliaries that see or handle coal, ash or products of combustion must be selected on a conservative basis from equipment and material that is best suited for the service expected.

- There is no significant differential in pulverizer power consumption per unit of heat input for the baseline or BT-11 coals, but the power consumption is 30 percent lower for washed coal.

- The physical size of the electrostatic precipitator for baseline or BT-11 coals will not vary significantly for any of these coals due to the relatively high dust loading for any unwashed coals. The resistivity of the ashes was considered normal and the high dust loading overrides variation in size due to resistivity differences. The electrostatic precipitator for washed coals would be 15 percent to 20 percent smaller in terms of collecting area due to the expected 50 percent lower dust loading.

- The Lakhra coal is easy to pulverize, yet demonstrates a high abrasiveness; is severe slagging, yet it is easy to clean in a furnace designed for this characteristic; has combustion characteristics that do not vary when run-of-mine coal is washed; and has demonstrated a high combustion efficiency, an intense stable flame characteristic and a wide range for stable turndown during load changes.

## 4.7 INVESTIGATION, "SIMILAR" ASH COAL TO LAKHRA ASH COAL

The scope of GCII's combustion testing subcontractor includes an investigation of similar coals, or coals with similar ashes, to the Lakhra coal and ash that is the subject of this feasibility study and this section of the report. The Combustion Engineering investigation is added to this section by reference (see Volume IX).

GCII surveyed Babcock & Wilcox and Foster-Wheeler for their experience of similar coals and ashes worldwide. The criterion used was that the majority of constituents should match in a line-by-line comparison. Engineering judgment was used to decide if enough of the critical line items matched to merit consideration as a coal with similar ash characteristics.

The characteristics of Lakhra coals and similar coals are summarized on Table 4.7-1. Analyses 1 through 6 are from PMDC No. 2 and 7 through 14 are from Seams 1 and 2 in the west lease area. The similar coals from Combustion Engineering are analyses 1A and 1B, those from Foster-Wheeler are analyses 2A through 2D, and that from Babcock & Wilcox is analysis 3A.

### Babcock & Wilcox

Babcock & Wilcox offered several units that in their experience they felt matched certain characteristics of Lakhra coal. Some of the units were fired with bituminous coal with high ash, high sulfur, high iron with severe slagging and high fouling indices. The ash loading per million Btu for the high ash bituminous coals was about half of that for Lakhra. The Texas lignite from San Miguel, being fired by Brazos Electric Power Cooperative, Inc. and South Texas Electric Cooperative, Inc., at the mine mouth San Miguel Power Plant in Atascosa County, Texas, was judged by GCII to have a coal as bad as or worse than Lakhra.

The Power Plant Development program of Brazos and South Texas Electric Power Cooperatives that resulted in the power generating plant at San Miguel closely parallels those studies being conducted by USAID/WAPDA for Lakhra coals. In 1971, a 50 core hole program investigated the reserve potential of the lignite deposits. In 1973, an extended program investigated and studied mining costs as well as power plant and transmission system feasibility. The coal quality was determined by 43 core samples taken over the mine area. A test mine was dug to establish various mining details such as percentage of swell of the spoil, angle of repose of the spoil piles, stable angle of slope in the high walls and other parameters including revegetation procedures.

Test burns were conducted by Grand Forks Energy Research Center, Grand Forks, North Dakota; Combustion Engineering Inc.'s KDL facilities, Windsor, Connecticut; Deutsche Babcock & Wilcox; and EVT, Energie-Und Verfahrenstechnix GMBH. The boiler vendor, Babcock & Wilcox (USA), also tested the fuel as part of the design program of the power plant.

The comparison of Item 3A for San Miguel to Items 1 through 14 for Lakhra on Table 4.7-1 shows about the same moisture, slightly higher ash on an as-received basis, a moisture and ash free calorific value characteristic of sub-bituminous to lignitic coals; severe slagging versus medium to severe and severe fouling versus low to severe for Lakhra. The mineral analysis for San Miguel shows higher silica, lower alumina, the same amount of calcium, modestly higher sodium, and much lower iron. The ash fusion temperature reducing basis is 1093° C (2000°F) versus 1082-1354°C (1980-2470°F) for Lakhra.

The sulfur loading per unit of heat input is generally lower as opposed to the ash loading per unit of heat input being higher for San Miguel versus Lakhra.

The boiler outline drawing, performance data and coal analysis are attached as Figures 4.7-1 and 4.7-2.

The Babcock & Wilcox classification of the lignite for San Miguel is high to severe for fouling and medium to severe for slagging. The classical method used by GCII in Table 4.7-1 results in a lower classification for slagging but essentially the same classification for fouling. The Babcock & Wilcox medium to severe classification is based on their own test burn data and data from the early program prior to actual design of the plant. The early program was conducted by acknowledged testing laboratories in the USA and Europe which classified this fuel as severe slagging, especially in the upper furnace, and severe high temperature fouling at the furnace exit unless moderate furnace exit gas temperatures were specified and used. These differences point up the extreme importance of test burning representative samples of a fuel that has never been used before, and of allowing Bidders to perform test burns prior to submittal of their proposal -especially the successful Bidder prior to optimization and freezing of his design.

Combustion Engineering Inc.

Combustion Engineering Inc. (CE) gave GCII a listing of 12 U.S. plants that have boilers designed to burn coals with high sulfur/iron fuel. These coals had no more than one half of the pounds of sulfur per million Btu than Lakhra, (2.07 to 4.65 versus 8.30), and the same for ash per million Btu, (6.61

to 23.34 versus 49.54), and GCII asked for worldwide experience. CE responded with two stations in Spain, one station in the People's Republic of China and three stations in India.

The 125 MW power plant of Gas y Eletricidad, SA, (GESA), known as Alcudia II, is the only one of these six stations that has coal that GCII classifies similar to Lakhra for severe slagging, high ash and high sulfur. The severe slagging for Alcudia II is a result of the high calcium content of the ash versus the high iron content of Lakhra. The ash loading and sulfur loading per unit heat input are higher for Alcudia II than for PMDC No. 2 (1-7) Lakhra coal, but comparable to west lease coals (7-14). The net heat input per unit of plan area is about 14,600 $MJ/h \cdot m^2$ (1,290,000 $Btu/h \cdot ft^2$) for Alcudia II versus 14,750 $MJ/h \cdot m^2$ (1,300,000 $Btu/h \cdot ft^2$) recommended for Lakhra.

The Alcudia II performance coal proximate, ultimate, mineral analyses and other data are shown as Item 1A of non-Lakhra fuels on Table 4.7-1. That comparison to Lakhra shows Alcudia II with lower moisture content; higher ash content; lower as-received and MAF calorific value; comparable sulfur; lower alumina; much higher calcium; considerably lower iron; higher base to acid ratio; lower fouling index; comparable severe slagging index and a lower silica percentage.

When the BT-11 coal samples were being burned GCII visited KDL to witness the burning of Seam 1 coal. CE afforded several coal analyses that have been burned at the Alcudia II Plant. Some of the analyses were blends of two or three different coals which CE felt had not been very successful in firing the boiler. The coal they felt that is closest to Lakhra coal is shown as analysis 1B on Table 4.7-1. To the best of CE's knowledge the GESA coal has not produced any problems when it has been fired in the the Alcudia II Plant.

The GESA coal (1B) is lower in moisture and higher in ash than Lakhra coal on an as-received basis. The as-fired HHV and the MAF HHV for GESA fall in the range of Lakhra coal. The sulfur and ash loadings per unit of heat input for GESA coal are above the range of Lakhra coal.

The mineral analysis for GESA coal shows higher silica, the same alumina, about the same calcium, lower iron and potassium than Lakhra coal. The base to acid ratio is below the range for Lakhra coal, while it is assumed the fouling index is low, and the slagging index is medium which is at the low end of Lakhra. The Alcudia II performance coal (1A) is classified as severe slagging, which matches Lakhra coal.

CE has included their comparison of similar coal in their report that is in Volume IX of this study.

CE's proposition engineering drawing and fuel analysis sheet are attached as Figures 4.7-3 and 4.7-4.

Foster-Wheeler Energy Corporation

Foster-Wheeler offered two stations in Spain as having low-grade lignitic or sub-bituminous coal similar to Lakhra. Both power stations belong to Empresa Nacional de Eletricidad, SA, (ENDESA), Madrid, Spain. The first, at Puentes, has hot gas tap mills and is a tower-type boiler; the moisture is about 50 percent greater than Lakhra and ash loading can be double that of Lakhra. The Puentes units were not considered, but the 350 MW Power Plants I, II and III at Teruel were considered.

The Teruel Power Plants I, II and III are fired with sub-bituminous coal that is comparable with Lakhra coal. The boiler is not a tower type and the pulverizers are hot primary air type. The Teruel proximate, ultimate and mineral analyses plus three mineral analyses are shown as 2A, 2B, 2C and 2D on Table 4.7-1. That comparison to Lakhra shows Teruel with no real differential in as-received moisture and ash; similar as-received and MAF calorific value; silica the same; lower alumina; lower sodium; no difference in iron; severe slagging; and a higher fouling index. The three alternative mineral analyses show higher silica; lower sodium; and lower iron but not to the point that slagging potential is reduced.

The summary performance sheet, boiler outline drawing, fuel analysis and ash analyses are attached as Figures 4.7-5, 4.7-6, 4.7-7 and 4.7-8.

GCII Recommendation

GCII recommends that prior to or during the bidding procedure USAID, WAPDA and the Consulting Engineer visit the Alcudia and Teruel Power Plants in Spain and the San Miguel Power Plant in Texas, USA, for discussions with the plant operations staff and an up-to-date investigative tour of the power plants.

## 4.8 BOILER DESIGN PARAMETERS FOR LAKHRA COAL

The determination of boiler design parameters for Lakhra coal is the result of the combination of laboratory combustion testing of unwashed and washed coals; washability testing of run of mine coal; technical interviews with domestic U.S. steam generator manufacturers; examination of Tabulations 1 and 2 of J. T. Boyd's report; and a literature search for worldwide experience with similar coals in utility grade steam generators.

Lakhra coal is classified as:

a. sub-bituminous "C" to Lignite "A"

b. low calorific value,

c. severe slagging (washed or unwashed),

d. medium fouling (unwashed), high fouling (washed),

e. low ash fusion, temperatures,

f. high sulfur content,

g. high ash content,

h. high moisture content,

i. easy to pulverize,

j. high abrasiveness.

k. high corrosion potential

GCII retained Combustion Engineering Inc., Windsor, Connecticut, as a subcontractor to perform laboratory combustion testing on unwashed and washed Lakhra coal. GCII retained Roberts & Schaefer, Chicago, Illinois, as a subcontractor to conduct a coal washability study and cooperated extensively with J. T. Boyd Co., Pittsburgh, Pennsylvania, in the analysis of this and the J. T. Boyd washability studies. GCII also held meetings and telephone discussions with Babcock & Wilcox, Combustion Engineering and Foster-Wheeler concerning Lakhra coal and its potential behavior in their steam generators.

The conclusions that can be drawn from the combustion testing program, washability studies, and discussions with Roberts & Schaefer, J. T. Boyd Co., Babock & Wilcox, Combustion Engineering, and Foster-Wheeler are:

a. The severe slagging characteristic of Lakhra coal requires a large furnace with a low plan area heat release rate, low burner zone heat release rate, low effective projected radiant surface (EPRS) heat release rate, low furnace exit gas temperature and high excess air for combustion.

b. The "moderate" fouling characteristic, high ash content and high abrasiveness requires a boiler with wide gas lanes and modest flue gas velocities in convection passes.

c. The high sulfur content and high moisture content will require a relatively high air heater exit gas temperature over the load range of the boiler, no furnace platen heating surfaces and 950°F/950°F steam temperatures. The high moisture content also requires primary air temperatures of 700°F or greater.

d. Regardless of the level of fly ash resistivity and the high sulfur content, the precipitator design will be conservative due to the high dust loading.

e. The use of washed coal as boiler fuel will reduce uncontrolled emissions of particulate matter and oxides of sulfur.

f. The use of washed coal as boiler fuel will not reduce the size of the furnace or boiler passes.

g. The use of washed coal as boiler fuel will affect some cost savings in electrostatic precipitators, ash handling systems, and if applicable, flue gas desulfurization systems, and FGD sludge handling systems.

The boiler design parameters that are critical to the performance of the two 350 MW Lakhra fired thermal generation units are those that define heat release rates in the furnace, distance of burners to upper arch, maximum furnace exit gas temperature, excess air for combustion, air heater exit gas temperature, and flue gas velocity.

Based on the results of the combustion testing program GCII recommends the following preliminary furnace and boiler design parameters for Lakhra coal:

| | | |
|---|---|---|
| Maximum Furnace Exit Gas Temperature, at any point entering the vertical furnace outlet plane, °C (°F) | 1,232 | (2,250) |

| | | |
|---|---|---|
| Heat Release Rates per Unit Area, MJ/h.m$^2$ (Btu/h.ft$^2$) | | |
| Per Unit of EPRS | 680 | (60,000) |
| Per Unit of Plan Area | 14,750 | (1,300,000) |
| Per Unit of Burner Zone | 2,850 | (250,000) |
| Minimum distance centerline of top burner row or top fuel injection ports to upper furnace arch m(Ft.) | 21.35 | (70) |
| Maximum Gas Velocity at 25% Excess Air, m/s (fps) | 13.7 | (45.0) |
| Minimum Air Heater Exit Gas Temperature at Boiler MCR, $^{o}$C ($^{o}$F) | 150 | (300) |
| Minimum Excess Air for Combustion at Boiler MCR, percent | 25 | 25 |

The three suppliers of steam generators contacted were in agreement on some of the foregoing parameters and not in agreement on others. What GCII learned in these discussions is outlined below.

Furnace Exit Gas Temperature

All suppliers felt the furnace exit gas temperature should not exceed the initial deformation temperature of the ash. Based on the data received to date from analyses performed by Standard Labs for J.T. Boyd, Commercial Testing and Engineering for Roberts & Schaefer and by CE for GCII. The minimum temperature expected for this parameter, derived from the J. T. Boyd report, is stated as 1232$^{o}$C (2250$^{o}$F). Too much conservatism can result in low steam temperatures which affect plant performance negatively just as a too small furnace results in load derate limits. This has lead GCII to specify the maximum furnace exit gas temperature at any point equal to the lowest measured ash fusion temperature on an oxydizing basis at the vertical furnace outlet plane just prior to any heating surfaces beyond that plane, regardless of tube clear spacing.

## Heat Release Rates

Some suppliers felt that the heat release rate per unit of EPRS was less important than other parameters such as furnace exit gas temperature, heat release per unit of plan area and heat release per unit of burner zone area. As such, it was suggested it not be specified. However, GCII does not agree with the suggestion and has included this limit in its specifications. The value stated is compatible with other parameters and is a measure of the EPRS for comparison.

One supplier stated the limit for heat release per unit of plan area as 1,300,000 Btu/h·ft$^2$; a second gave the limit as 1,500,000 Btu/h·ft$^2$; and the third stated a range of 1,300,000 to 1,500,000 Btu/h·ft$^2$. They all stated the values were preliminary and they would give a recommended value after the results of the combustion testing program were available. The CE report recommends 1.3 to 1.4 million Btu per sq ft hour.

The heat release per unit of burner zone area is meaningless without a common definition of the limits of the burner zone as specified below. The three suppliers contacted do not agree with each other nor with GCII as to what is the burner zone area. The GCII definition will put them all on the same basis. The GCII definition assumes that heat released in the burner zone sees the six sides of the defined cube as plane areas.

## Maximum Gas Velocity

GCII's survey of the suppliers determined they all agreed with the value stated for a fuel with an ash loading of this magnitude. GCII's experience is that the gas velocity limit should be specified at a fixed percentage of excess combustion air. GCII's standard for sub-bituminous and lignite fuels with high ash and high moisture is 25 percent excess air. Regardless of what the Vendor may feel is more suitable for his performance guarantees, GCII would size the combustion air and flue gas system for a net flow condition based on 25 percent excess air in the furnace for combustion.

## Air Heater Exit Gas Temperature

The three suppliers stated that with the high moisture and high sulfur content of Lakhra coals the air heater exit gas temperature snould be at least 150°C (300°F). GCII states that the exit gas temperature should be not less than that stated over the load range of the boiler. During the actual design phase, an acid dew point study should be conducted to further define this temperature limit and provide a margin above the dew point condensation temperature to retard or

prevent corrosion from formation of acids in gas breechings, electrostatic precipitator, IDF's and flues in the chimney.

Excess Air for Combustion

GCII's experience with high ash/high moisture fossil fuels is that higher than normal excess air is required for sufficient oxygen to be available for complete combustion to retard formation of carbon monoxide and more importantly to provide an oxydizing atmosphere in the burner zone. The amount that is normally specified is 30 percent excess air over the stoichiometric air requirement of the lignitic and sub-bituminous coals. The test burn results have shown that Lakhra coal is highly reactive, burns very easily, and does not need the equivalent of 30 percent excess air to assure an oxydizing atmosphere in the burner zone. Consequently GCII agrees with the test burn results that 25 percent excess air is adequate for specifications.

For these design parameters to have meaning and be useful in evaluating proposals from steam generator vendors, the limits of the furnace, net heat available, effective projected radiant surface (EPRS), burner zone, plan area, and allowable tube spacings must be defined. The following definitions will render each bidder on the same basis and that will result in each offer being on a common basis that is controlled by USAID/WAPDA.

a. Furnace Limits

The furnace envelope is defined as the face of the water walls, sloping hopper tubes, roof tubes, and the vertical plane tangent to the face of the nose of the upper furnace arch tubes.

b. Net Heat Available

Net heat available shall be calculated on the basis of the energy released at the GCV of the fuel, less radiation loss, less unburned combustible loss, less latent heat of the water in the fuel and formed by burning hydrogen in the fuel, plus the sensible heat in the primary and secondary air above a 38°C (100°F) reference point.

c. Effective Projected Radiant Surface

Effective projected radiant surface is the flat projected area (tube diameter and fin) of the water walls, sloping hopper tubes, roof tubes and the area of the vertical plane of the furnace exit. Furnace platen heating surface is not allowed and therefore cannot be counted.

d. Burner Zone

The burner zone shall be calculated as the area of the six sides of a cube defined as the furnace width by furnace depth by the height equal to 3 meters (10 feet), above and below the centerlines of the upper and lower burners or fuel injection ports. If the lower rows or ports are less than 3 meters (10 feet) above the beginning of the bends for the lower hopper tubes, then the lesser dimension shall be used.

e. Plan Area

Plan area shall be calculated as the furnace width times the furnace depth at the centerline of the top row of burners or fuel injection ports.

f. Minimum Allowable Clear Tube Spacing

| °C (°F) | mm | inches |
|---|---|---|
| 1149-1232 (2100-2250) | 560 | 22 |
| 1010-1149 (1,850-2,100) | 330 | 13 |
| 843-1010 (1,550-1,850) | 165 | 6 1/2 |
| 620-843 (1150-1,550) | 100 | 4 |
| Up to 620 (Up to 1150) | 63.5 | 2 1/2 |

All convection heating surfaces shall be bare tubes; extended finned surface shall not be allowed. Regardless of gas temperature there shall be no platen heating surface in the furnace.

Coal Specifications - Unwashed Coal

The run of mine coal (unwashed) specifications for the steam generator technical specification shall be:

Short Proximate Analysis

| | Typical | Range |
|---|---|---|
| Daily Average | | |
| GCV-Btu/lb (Dry) | 7500 | 6300 - 8700 |
| Ash - % (Dry) | 36.0 | 26.0 - 46.0 |
| Sulfur - % (Dry) | 7.4 | 6.5 - 9.5 |
| $H_2O$ - % | 32.0 | 25.0 - 45.0 |

Monthly Average

| | | | | |
|---|---|---|---|---|
| GCV-Btu/lb (Dry | 7500 | 6900 | - | 8100 |
| Ash - % (Dry) | 36.0 | 30.0 | - | 42.0 |
| Sulfur - % (Dry) | 7.4 | 6.8 | - | 8.3 |
| $H_2O$ - % | 32.0 | 28.0 | - | 40.0 |

## Proximate Analysis

| | | | | |
|---|---|---|---|---|
| Ash - % | 36.00 | 26.17 | - | 41.87 |
| VM - % | 34.60 | 32.15 | - | 39.58 |
| FC - % | 29.40 | 23.68 | - | 35.82 |
| Sul - % | 7.26 | 6.02 | - | 9.85 |
| GCV-Btu/lb | 7500 | 6060 | - | 8950 |
| Equil. Moist. - % | 38.91 | 33.77 | - | 50.06 |

## Ultimate Analysis

| | Typical | Range | | |
|---|---|---|---|---|
| $H_2O$ - % | 32.00 | - | - | - |
| Ash - % | 24.48 | 26.17 | - | 41.08 |
| $H_2$ - % | 2.12 | 2.76 | - | 3.66 |
| C - % | 29.12 | 35.61 | - | 50.75 |
| $N_2$ - % | 0.55 | 0.66 | - | 1.08 |
| S - % | 4.94 | 6.02 | - | 9.85 |
| $O_2$ - % | 6.79 | 9.69 | - | 12.84 |
| Cl - % | 0.14 | 0.10 | - | 0.19 |
| GCV-Btu/lb | 5100 | 6060 | - | 8950 |

## Forms of Sulfur

| | | | | |
|---|---|---|---|---|
| Total % | 7.26 | 6.02 | - | 9.85 |
| Pyrite % | 3.90 | 2.89 | - | 5.51 |
| Sulfate % | 0.56 | 0.31 | - | 1.56 |
| Organic % | 2.80 | 1.43 | - | 3.86 |

## Fusion Temperature of Ash

| | | | | |
|---|---|---|---|---|
| Reducing - °F | | | | |
| Initial | 2094 | 2001 | - | 2443 |
| Softening | 2124 | 2005 | - | 2453 |
| Hemisph. | 2157 | 2012 | - | 2463 |
| Final | 2263 | 2046 | - | 2508 |
| Oxidyzing - °F | | | | |
| Initial | 2437 | 2254 | - | 2593 |
| Softening | 2474 | 2302 | - | 2621 |
| Hemisph. | 2503 | 2333 | - | 2631 |
| Final | 2543 | 2395 | - | 2640 |

## Mineral Analysis

| % Ignited Basis | | | |
|---|---|---|---|
| $SiO_2$ | 39.60 | 32.34 - | 47.68 |
| $Al_2O_3$ | 20.17 | 12.12 - | 26.30 |
| $TiO_2$ | 2.02 | 1.33 - | 3.16 |
| CaO | 3.70 | 2.11 - | 8.39 |
| $K_2O$ | 0.61 | 0.45 - | 0.76 |
| MgO | 1.60 | 0.79 - | 2.54 |
| $Na_2O$ | 0.72 | 0.32 - | 1.02 |
| $Fe_2O_3$ | 24.64 | 17.02 - | 33.60 |
| $P_2O_5$ | 0.75 | 0.56 - | 0.93 |
| $SO_3$ | 5.63 | 2.20 - | 10.55 |
| Slagging Index | Severe | Severe - | Severe |
| Fouling Index | Medium | Low - | High |

Typical high ash unwashed Lakhra lignite is characterized by the following:

| Source | W-C2 | W-C1 | E-C2 |
|---|---|---|---|
| **Proximate - %** | | | |
| Ash | 41.87 | 41.00 | 39.89 |
| VM | 32.69 | 35.32 | 32.15 |
| FC | 25.44 | 23.67 | 27.96 |
| Sulfur | 8.46 | 7.65 | 6.48 |
| GCV-Btu/lb | 6060 | 6592 | 6850 |
| **Fusion Temperature - °F** | | | |
| Reducing | | | |
| Initial | 2140 | 2108 | 2104 |
| Softening | 2162 | 2152 | 2155 |
| Hemisph. | 2197 | 2208 | 2372 |
| Final | 2492 | 2312 | 2490 |
| Oxydizing | | | |
| Initial | 2462 | 2382 | 2502 |
| Softening | 2497 | 2451 | 2543 |
| Hemisph. | 2515 | 2483 | 2558 |
| Final | 2545 | 2521 | 2585 |
| **Ultimate - %** | | | |
| $H_2O$ | 25.00 | 32.00 | 35.00 |
| Ash | 31.40 | 27.88 | 25.93 |
| $H_2$ | 2.07 | 1.94 | 1.89 |
| C | 26.71 | 25.94 | 25.52 |
| $N_2$ | 0.56 | 0.45 | 0.48 |
| S | 6.35 | 5.20 | 4.21 |
| $O_2$ | 7.91 | 6.59 | 6.97 |
| GCV-Btu/lb | 4545 | 4483 | 4453 |

| Mineral - % | | | |
|---|---|---|---|
| $SiO_2$ | 45.06 | 47.68 | 47.57 |
| $Al_2O_3$ | 20.98 | 19.62 | 21.91 |
| $TiO_2$ | 2.16 | 1.88 | 2.48 |
| CaO | 3.89 | 3.06 | 2.13 |
| $K_2O$ | 0.76 | 0.58 | 0.65 |
| MgO | 0.79 | 2.54 | 1.15 |
| $Na_2O$ | 0.48 | 0.32 | 0.70 |
| $Fe_2O_3$ | 19.11 | 17.79 | 19.92 |
| $P_2O_5$ | 0.66 | 0.59 | 0.82 |
| $SO_3$ | 4.98 | 5.28 | 2.20 |

Typical low ash unwashed Lakhra lignite is characterized by the following:

| Source | W-A2 | E-B1 | C-A2 |
|---|---|---|---|
| **Proximate - %** | | | |
| Ash | 27.77 | 27.83 | 27.68 |
| VM | 39.15 | 36.94 | 38.18 |
| FC | 33.09 | 35.23 | 34.14 |
| Sulfur | 8.26 | 7.36 | 8.46 |
| GCV-Btu/lb | 8534 | 8821 | 8826 |
| **Fusion Temperature - %** | | | |
| Reducing | | | |
| Initial | 2065 | 2047 | 2001 |
| Softening | 2076 | 2076 | 2005 |
| Hemisph. | 2079 | 2132 | 2012 |
| Final | 2133 | 2195 | 2046 |
| Oxydizing | | | |
| Initial | 2268 | 2445 | 2448 |
| Softening | 2321 | 2473 | 2510 |
| Hemisph. | 2391 | 2491 | 2527 |
| Final | 2503 | 2538 | 2550 |
| **Ultimate - %** | | | |
| $H_2O$ | 45.00 | 45.00 | 45.00 |
| Ash | 15.27 | 15.31 | 15.22 |
| $H_2$ | 1.91 | 2.01 | 1.84 |
| C | 26.81 | 27.21 | 26.83 |
| $N_2$ | 0.44 | 0.50 | 0.52 |
| S | 4.54 | 4.05 | 4.65 |
| $O_2$ | 6.03 | 5.92 | 5.94 |
| GCV-Btu/lb | 4694 | 4852 | 4855 |

| Mineral - % | | | |
|---|---|---|---|
| $SiO_2$ | 40.80 | 32.34 | 36.44 |
| $Al_2O_3$ | 12.58 | 19.22 | 17.61 |
| $TiO_2$ | 1.59 | 1.54 | 1.68 |
| CaO | 7.54 | 4.28 | 3.92 |
| $K_2O$ | 0.64 | 0.65 | 0.58 |
| MgO | 2.20 | 1.82 | 1.33 |
| $Na_2O$ | 0.75 | 0.94 | 0.81 |
| $Fe_2O_3$ | 23.87 | 31.02 | 31.88 |
| $P_2O_5$ | 0.56 | 0.90 | 0.93 |
| $SO_3$ | 8.63 | 7.20 | 4.35 |

Typical low ash unwashed fusion Lakhra lignite is characterized by the following:

| Source | W-A1 | E-A1 | C-A3 |
|---|---|---|---|
| **Proximate - %** | | | |
| Ash | 29.42 | 27.26 | 31.87 |
| VM | 39.58 | 39.28 | 36.29 |
| FC | 31.00 | 33.46 | 31.84 |
| Sulfur | 8.85 | 7.45 | 8.03 |
| GCV-Btu/lb | 8292 | 8882 | 8236 |
| **Fusion Temperature - %** | | | |
| Reducing | | | |
| Initial | 2017 | 2046 | 2012 |
| Softening | 2035 | 2076 | 2045 |
| Hemisph. | 2051 | 2103 | 2072 |
| Final | 2132 | 2230 | 2189 |
| Oxydizing | | | |
| Initial | 2306 | 2441 | 2421 |
| Softening | 2398 | 2488 | 2470 |
| Hemisph. | 2496 | 2501 | 2500 |
| Final | 2525 | 2537 | 2541 |
| **Ultimate - %** | | | |
| $H_2O$ | 38.00 | 42.00 | 38.00 |
| Ash | 18.24 | 15.81 | 19.76 |
| $H_2$ | 2.18 | 2.08 | 1.84 |
| C | 29.27 | 29.44 | 28.51 |
| $N_2$ | 0.54 | 0.53 | 0.58 |
| S | 5.49 | 4.32 | 4.98 |
| $O_2$ | 6.28 | 5.82 | 6.33 |
| GCV-Btu/lb | 5141 | 5152 | 5106 |



166

Mineral - %

| | | | |
|---|---|---|---|
| $SiO_2$ | 38.01 | 40.97 | 37.05 |
| $Al_2O_3$ | 20.84 | 18.87 | 20.84 |
| $TiO_2$ | 2.07 | 1.69 | 2.77 |
| CaO | 2.89 | 3.63 | 3.07 |
| $K_2O$ | 0.57 | 0.57 | 0.63 |
| MgO | 1.70 | 1.27 | 1.16 |
| $Na_2O$ | 0.58 | 0.69 | 0.78 |
| $Fe_2O_3$ | 26.11 | 25.16 | 27.55 |
| $P_2O_5$ | 0.76 | 0.87 | 0.88 |
| $SO_3$ | 5.18 | 6.25 | 5.13 |

Coal Specifications - Washed Coal

The washed coal specifications for the steam generator technical specification shall be:

Short Proximate Analysis

| | |
|---|---|
| GCV-Btu/lb (Dry) | 9538 |
| Ash - % (Dry) | 23.23 |
| Sulfur - % (Dry) | 6.52 |
| $H_2O$ - % | 35.00 |

Proximate Analysis

| | Typical | | Range | |
|---|---|---|---|---|
| $H_2O$ - % | - | 35.00 | - | - |
| Ash - % | 23.23 | 15.10 | 16.86 - | 31.39 |
| VM - % | 39.65 | 25.77 | 34.71 - | 43.64 |
| FC - % | 37.12 | 24.13 | 33.87 - | 41.37 |
| Sulfur - % | 6.52 | 4.24 | 5.10 - | 8.07 |
| GCV-Btu/lb | 9538 | 6200 | 8293 - | 10,389 |

Ultimate Analysis

| | Typical | Range | |
|---|---|---|---|
| $H_2O$ - % | 35.00 | - - | - |
| Ash - % | 15.10 | 16.86 - | 31.39 |
| $H_2$ - % | 2.57 | 3.47 - | 4.78 |
| C - % | 34.48 | 46.54 - | 60.04 |
| $N_2$ - % | 0.64 | 0.85 - | 1.22 |
| S - % | 4.24 | 5.10 - | 8.07 |
| $O_2$ - % | 7.97 | 10.40 - | 15.16 |
| GCV - Btu/lb | 6200 | 8293 - | 10,389 |

## Forms of Sulfur

| | | | |
|---|---|---|---|
| Total - % | 6.52 | 5.10 - | 8.07 |
| Pyritic - % | 2.49 | 1.61 - | 3.12 |
| Sulfate - % | 0.44 | 0.20 - | 0.90 |
| Organic - % | 3.59 | 2.17 - | 4.50 |

## Fusion Temperature of Ash

Reducing - °F

| | | | |
|---|---|---|---|
| Initial | 2066 | 1986 - | 2308 |
| Softening | 2097 | 1998 - | 2458 |
| Hemisph. | 2126 | 2004 - | 2480 |
| Final | 2185 | 2038 - | 2512 |

Oxydizing - °F

| | | | |
|---|---|---|---|
| Initial | 2431 | 2157 - | 2560 |
| Softening | 2466 | 2230 - | 2582 |
| Hemisph. | 2494 | 2305 - | 2625 |
| Final | 2562 | 2452 - | 2735 |

## Mineral Analysis

| | | | |
|---|---|---|---|
| $SiO_2$ | 37.65 | 29.78 - | 49.33 |
| $Al_2O_3$ | 21.03 | 15.84 - | 26.46 |
| $TiO_2$ | 2.09 | 1.68 - | 3.55 |
| CaO | 3.77 | 1.86 - | 7.26 |
| $K_2O$ | 0.66 | 0.46 - | 0.81 |
| MgO | 2.24 | 1.30 - | 4.28 |
| $Na_2O$ | 1.12 | 0.75 - | 1.69 |
| $Fe_2O_3$ | 25.00 | 16.64 - | 32.89 |
| $P_2O_5$ | 0.61 | 0.48 - | 0.84 |
| $SO_3$ | 5.39 | 2.24 - | 12.70 |
| Slagging Index | Severe | Severe - | Severe |
| Fouling Index | High | Medium - | Severe |

Typical high ash washed Lakhra lignite is characterized by the following:

| Source | E-A3 | E-C2 | C-B3 |
|---|---|---|---|
| **Proximate - %** | | | |
| Ash | 29.25 | 31.39 | 28.26 |
| VM | 36.88 | 34.71 | 37.53 |

| | | | |
|---|---|---|---|
| FC | 33.87 | 33.90 | 34.21 |
| Sulfur | 5.10 | 5.72 | 5.34 |
| GCV-Btu/lb | 8601 | 8293 | 8651 |
| Fusion Temperature - % | | | |
| Reducing | | | |
| Initial | 2308 | 2086 | 2057 |
| Softening | 2458 | 2114 | 2058 |
| Hemisph. | 2480 | 2166 | 2106 |
| Final | 2512 | 2204 | 2198 |
| Oxydizing | | | |
| Initial | 2501 | 2482 | 2495 |
| Softening | 2582 | 2512 | 2518 |
| Hemisph. | 2625 | 2522 | 2534 |
| Final | 2654 | 2558 | 2560 |
| Ultimate - % | | | |
| $H_2O$ | 35.00 | 35.00 | 35.00 |
| Ash | 19.01 | 20.40 | 18.37 |
| $H_2$ | 2.57 | 3.11 | 2.30 |
| C | 32.32 | 30.25 | 32.04 |
| $N_2$ | 0.59 | 0.55 | 0.61 |
| S | 3.32 | 3.72 | 3.47 |
| $O_2$ | 7.20 | 6.97 | 8.21 |
| GCV-Btu/lb | 5591 | 5390 | 5623 |
| Mineral - % | | | |
| $SiO_2$ | 43.99 | 49.06 | 43.99 |
| $Al_2O_3$ | 26.46 | 20.21 | 20.58 |
| $TiO_2$ | 3.55 | 2.51 | 2.34 |
| CaO | 1.86 | 2.20 | 3.10 |
| $K_2O$ | 0.64 | 0.64 | 0.76 |
| MgO | 1.96 | 1.57 | 1.30 |
| $Na_2O$ | 1.09 | 0.85 | 0.95 |
| $Fe_2O_3$ | 16.64 | 19.97 | 21.61 |
| $P_2O_5$ | 0.56 | 0.61 | 0.56 |
| $SO_3$ | 2.90 | 2.38 | 4.15 |

Typical low ash washed Lakhra lignite is characterized by the following:

| Source | W-A3 | E-B2 | E-A1 |
|---|---|---|---|
| Proximate - % | | | |
| Ash | 16.86 | 17.04 | 17.37 |
| VM | 42.51 | 41.73 | 43.64 |

| | | | |
|---|---|---|---|
| FC | 40.63 | 41.23 | 38.99 |
| Sulfur | 5.24 | 5.87 | 5.65 |
| GCV-Btu/lb | 10,243 | 10,325 | 10,389 |
| **Fusion Temperature - %** | | | |
| Reducing | | | |
| Initial | 2108 | 2100 | 2065 |
| Softening | 2122 | 2130 | 2115 |
| Hemisph. | 2127 | 2170 | 2170 |
| Final | 2163 | 2210 | 2240 |
| Oxydizing | | | |
| Initial | 2342 | 2309 | 2157 |
| Softening | 2383 | 2365 | 2230 |
| Hemisph. | 2411 | 2430 | 2305 |
| Final | 2521 | 2545 | 2510 |
| **Ultimate - %** | | | |
| $H_2O$ | 35.00 | 35.00 | 35.00 |
| Ash | 10.96 | 11.08 | 11.29 |
| $H_2$ | 2.55 | 2.88 | 2.94 |
| C | 37.86 | 39.03 | 38.67 |
| $N_2$ | 0.75 | 0.70 | 0.63 |
| S | 3.41 | 3.82 | 3.67 |
| $O_2$ | 9.47 | 7.49 | 7.79 |
| GCV-Btu/lb | 6658 | 6711 | 6753 |
| **Mineral - %** | | | |
| $SiO_2$ | 31.75 | 34.20 | 33.55 |
| $Al_2O_3$ | 17.48 | 21.03 | 21.24 |
| $TiO_2$ | 1.74 | 1.96 | 1.82 |
| CaO | 5.91 | 3.33 | 4.38 |
| $K_2O$ | 0.57 | 0.64 | 0.58 |
| MgO | 3.48 | 3.37 | 2.05 |
| $Na_2O$ | 1.40 | 1.42 | 1.02 |
| $Fe_2O_3$ | 24.32 | 23.40 | 25.82 |
| $P_2O_5$ | 0.57 | 0.59 | 0.68 |
| $SO_3$ | 12.70 | 9.63 | 8.53 |

Typical low ash fusion washed Lakhra lignite is characterized by the following:

| Source | W-A1 | W-B1 | C-A3 |
|---|---|---|---|
| **Proximate - %** | | | |
| Ash | 24.33 | 22.22 | 27.49 |
| VM | 40.68 | 40.89 | 37.61 |

| | | | |
|---|---|---|---|
| FC | 34.99 | 36.89 | 34.90 |
| Sulfur | 7.42 | 8.07 | 7.09 |
| GCV-Btu/lb | 9160 | 9256 | 8821 |
| **Fusion Temperature - °F** | | | |
| Reducing | | | |
| Initial | 1990 | 1986 | 2001 |
| Softening | 2014 | 1998 | 2021 |
| Hemisph. | 2048 | 2004 | 2035 |
| Final | 2121 | 2038 | 2100 |
| Oxydizing | | | |
| Initial | 2493 | 2483 | 2475 |
| Softening | 2512 | 2510 | 2517 |
| Hemisph. | 2532 | 2520 | 2533 |
| Final | 2582 | 2565 | 2560 |
| **Ultimate - %** | | | |
| $H_2O$ | 35.00 | 35.00 | 35.00 |
| Ash | 15.81 | 14.44 | 17.87 |
| $H_2$ | 2.40 | 2.44 | 2.26 |
| C | 32.89 | 33.55 | 32.87 |
| $N_2$ | 0.64 | 0.62 | 0.64 |
| S | 4.82 | 5.25 | 4.61 |
| $O_2$ | 8.44 | 8.70 | 6.76 |
| GCV-Btu/lb | 5954 | 6016 | 5734 |
| **Mineral - %** | | | |
| $SiO_2$ | 37.24 | 34.02 | 38.19 |
| $Al_2O_3$ | 22.60 | 19.92 | 19.49 |
| $TiO_2$ | 2.17 | 1.89 | 2.60 |
| CaO | 2.93 | 2.38 | 3.59 |
| $K_2O$ | 0.69 | 0.65 | 0.70 |
| MgO | 2.16 | 2.21 | 1.39 |
| $Na_2O$ | 0.96 | 1.02 | 0.94 |
| $Fe_2O_3$ | 27.24 | 31.76 | 27.63 |
| $P_2O_5$ | 0.84 | 0.81 | 0.63 |
| $SO_3$ | 3.15 | 5.00 | 4.68 |

The forced draft (FD) and primary air (PA) fans shall be sized on the basis of delivering not less than 25 percent excess air to the furnace for combustion at any given operation condition. The net design flow of the fans shall assume air heater leakages, (in worn condition), to be not less than 15 percent excess

air. The PA fans test block weight flow shall be 10 percent greater than the net primary air flow required when all coal pulverizers are in service for the "worst" conditions that will be experienced at the boiler design point; i.e., high moisture, high ash, lowered gross calorific value coal. The FD fans test block weight flow shall be 10 percent greater than the net secondary air flow required for the "best" conditions that will be experienced at the boiler design point; ie., low moisture, low ash, higher gross calorific value coal that may allow two idle pulverizers in lieu of one. The static pressure margin shall be 21 percent above the static pressure requirements at net flows defined above. The net flow volume shall be based on 27°C (80°F) air temperature. The test block flow volume shall be based on 50°C (122°F) air temperature.

The standard air definition for fan design at sea level is a barometer of 760mm (29.92 inches) Hg and 21°C (70°F) and a dry air density of 1.20 kg/m$^3$ (0.075 lbs/cf). That density must be corrected for the local barometer, temperature and humidity. The American Boiler Manufacturers Association (ABMA) defines boiler room air conditions for performance guarantees as:

| | | |
|---|---|---|
| Temperature | 27°C | 80°F |
| Relative Humidity | 60 percent | 60 percent |
| Barometer | 760mm Hg | 29.921 In. Hg |
| Absolute Humidity | 0.013 kg/kg | 0.013 lbs/lb |

GCII's standard practice assumes that the FDF's/PAF's will raise the ambient air to 38°C (100°F) to the air heater inlets. Regardless, in the subtropical desert climate of the Lakhra area it is felt that 38°C (100°F) air to the air heater inlets is representative of what will be experienced. This is the normal boundary that is specified that the steam generator supplier bases his efficiency guarantee on. GCII has specified that the PAF and FDF test block design flow be based on 50°C (122°F) inlet air temperature; the absolute humidity should be representative of local conditions. If it is significantly greater than the 0.013 value stated above, the greater value should be specified; otherwise the standard condition is suitable.

The induced draft (ID) fan net weight flow shall be based on 25 percent excess air in the furnace for combustion, plus an air heater leakage, (in worn condition), equivalent to 15 percent excess air, plus setting, breeching and precipitator infiltration equivalent to 5 percent excess air. The net flow

volume shall be calculated at not less than 150°C (300°F). The ID fan test block flow shall be calculated by adding 10 percent to the net weight flow at 45 percent excess air. The test block flow volume shall be calculated at not less than 175°C (345°F). The test block static pressure shall be 21 percent greater than the net weight flow static pressure requirements.

The amount of air heater leakage normally stated by suppliers is about equal to 5 to 7 percent excess air and the specific guaranteed leakage is qualified that the Owner/Operator must keep air heater seals tight to maintain that guaranteed leakage. GCII's experience with its clients and in many plants it has visited is that it is not always possible to keep seals set where the supplier would like to see them set and that it is prudent to specify the margin of leakage as about twice the normal amount guaranteed. Our standard is 15 percent excess air leakage for all air preheaters except trisectors. The trisector air preheater leakage is more complex in that higher pressure primary air leaks to secondary air and flue gas, while lower pressure secondary air leaks only to the flue gas. An air balance must be made of a trisector air preheater and the leakages to the flue gas stream should be at least doubled for the purposes of induced draft fan net design flow.

The infiltration of air to the boiler setting is normally predicted by steam generator suppliers as the equivalent of 1 to 2 percent excess air. The infiltration of ambient air occurs over the whole flue gas system up to the inlet of the induced draft fans, not just at the boiler setting. The gas breechings contain bolted access doors which tend to allow in-leakage when not closed properly. There are many paths for air to infiltrate through the precipitator and the closer the gas gets to the induced draft fans the greater the pressure differential becomes and the higher potential there is for greater in-leakage flow of air to the flue gas. GCII's standard practice assumes the amount of infiltration air is equal to 5 percent excess air. This amount allows a nominal value for an item that is difficult to quantify without extensive field testing.

The high ash loading per unit of gas volume and the abrasive nature of the high ash loading requires a precipitator sized specifically for Lakhra coal. These design parameters are:

a. Rigid discharge electrode and rigid collection electrode type.

b. Minimum Specific Collection Area, $m^2/m^3/sec$ ($ft^2/Macfm$)

| | | |
|---|---|---|
| Unwashed coal | 100 | (508) |
| Washed coal | 85 | (432) |

| | | | |
|---|---|---|---|
| c. | Maximum Effective Collecting Electrode Height, mm (ft) | 12,800 | (42) |
| d. | Minimum Gas Passage Width, mm (inches) | 305 | (12) |
| e. | Maximum Gas Velocity at ID Fan Test Block Flow, m/sec (ft/sec) | 1.37 | (4.5) |
| f. | Alignment Tolerance on Discharge Electrodes, mm (inches) | ±6 | (±0.25) |
| g. | Aspect Ratio | 2 to 1 | |
| h. | Number of Electrical Fields | | |
| | Unwashed coal | 6 | |
| | Washed coal | 5 | |
| i. | Number of TR Sets per Electrical Bus Section | | |
| | Unwashed coal | 1 | |
| | Washed coal | 1 | |
| j. | Number of Hoppers per Electrical Bus Section | | |
| | Unwashed coal | 1 | |
| | Washed coal | 1 | |
| k. | Maximum Coefficient of Variation | ±15% | |

The turbine-generator is guaranteed at 95 percent of valves wide open. The valves wide open (VWO) rating of the turbine-generator is not time limited; therefore, in order to not overload the boiler at the turbine-generator valves wide open rating the boiler maximum capacity rating was selected to match the turbine-generator VWO rating. Design margins for the boiler and its auxiliaries and balance of plant equipment have been set to allow the boiler to achieve its MCR and the turbine-generator to achieve its VWO condition. The effect of this design philosophy is to have the plant design such that the limiting factor for electrical generation is the amount of steam that the turbine throttle valves will pass at the turbine-generator valves wide open operating condition.

The April 1983 Lakhra Coal and Power Development Project Review by SWEC recommended a 12,515 kPa (1,800 psig nominal) cycle over a 16,650 kPa (2,400 psig nominal) cycle for three stated reasons. The reasons are:

Lower furnace exit gas temperature and lower duty on the superheater.

- Water side corrosion considerations.

- Boiler water quality versus carryover of solids to high pressure turbine.

The results of the Combustion Engineering test burn program corrosion probe evaluation agreed with the SWEC recommended nominal 1800 psig heat balance cycle, but went further to recommend 950°F/950°F main steam and reheat steam temperatures. The use of platen type superheater surface in the furnace was also not recommended; consequently, the plant thermal cycle is based on 1800 psig, 950°F at the turbine throttle valves with a single reheat to 950°F and seven feedwater heaters.

GCII held discussions with Babcock & Wilcox, Combustion Engineering and Foster-Wheeler concerning their proposed design of the power boilers for Lakhra coals for this project. All three suppliers had no reservations with respect to being able to design a 16,650 kPa (2,400 psig) boiler for Lakhra coal that should have long life, high availability and high reliability. They all stated they would have to use platen heating surface in the furnace to assure making main steam temperature. Subsequently platen heating surfaces in the furnace were ruled out, which negated further consideration of a 2400 psig thermal cycle.

The possibility of slag falls can be kept to a minimum if the boiler is purchased with sufficient soot blowers to keep any heating surfaces beyond the furnace exit and, in particular, water cooled surface just above and below the nose of the upper furnace arch free from slag buildup. WAPDA should very carefully evaluate the number and type of soot blowers and expect to require at least one bidder to double the number of soot blowers offered to properly keep all furnace and convection surfaces clean and to provide an equitable comparison of each other.

The high temperature corrosion of waterwall tubes and, in particular, those tubes in the high temperature burner zone can be minimized by not allowing a reducing atmosphere to be present. This will be accomplished by not allowing off-stoichiometric firing and by the use of today's low $NO_x$ burners or corner firing, which negates the need for overfire air ports. At least one supplier introduces a percentage of secondary air through ports in the furnace walls below the burner zone to assure a greater possibility of an oxydizing atmosphere at the furnace walls in the burner zone.

The carryover of solids to the superheater and subsequently to the turbine is a problem. The ABMA standards recommend that a minimum steam purity of not less than 1 PPM be guaranteed by

its members. GCII specifications historically specify 0.25 PPM carryover of total solids for a steam purity guarantee. The domestic and international suppliers who have bid to GCII specifications worldwide have guaranteed the specified steam purity of 0.25 PPM without taking an exception to the requirements.

When a condenser leak occurs or high levels of silica are detected, the boiler blowdown rate can be increased to reduce silica and other solids in boiler water until an orderly shutdown can be accomplished to plug the leaking tube(s). If the boiler and turbine cannot be taken off line for plugging condenser tubes, then the 2 x 100 percent full flow condensate polishing demineralizer combined with an increased boiler blowdown rate can be utilized to maintain boiler water quality within limits until an outage on a weekend can be scheduled. The condensate poishing demineralizer is shown schematically on Drawing M-1 (Appendix B, Volume VII).

In summary, GCII confidently states that WAPDA can build and operate two 350 MW plants with a high degree of reliability and availability for the range of Lakhra lignite by not relaxing the recommended design parameters. Our previous associations with WAPDA through the predecessor company of GCII in the 1960's and early 1970's included the training of WAPDA personnel in water chemistry for power boilers. The results of that training exercise strongly indicate that WAPDA engineers are capable of coping with the complications of firing low grade coal such as Lakhra lignite. Regardless, extensive training of WAPDA operations and design engineers will be required for this first large-scale application of coal-fired thermal generation of electricity in Pakistan. The utilization of Lakhra lignite fuel is the next logical step that WAPDA can take for Pakistan to take advantage of an indigenous source of fuel to generate electrical energy.

TABLE 4.1-1

FUEL ANALYSES

| Analysis | 1 | 2 | 3 | 4 | 5 | 6 | 7 | 8 | 9 | 10 | 11 | 11A | 11B | 12 | 13 | 14 | 15 | 16 | 17 |
|---|---|---|---|---|---|---|---|---|---|---|---|---|---|---|---|---|---|---|---|
| Source | JICA West Open | JICA Central Deep | JICA East Open | JICA Whole Weighted | PMDC No. 2 GCII | PMDC 2 Boyd Ch. Sample | PMDC 2 CE/KDL Baseline | PMDC 2 3 Tons Raw | PMDC 2 2nd SOT Raw | PMDC 2 CE/KDL From DOE | BT-11 Combined Seams 1/2 | BT-11 CE/KDL Seam 1 | BT-11 CE/KDL Seam 2 | BT-11 1.60 Flt Seam 1 | BT-11 1.60 Flt Seam 2 | PMDC 2 3 Tons 1.80 Flt | PMDC 2 3 Tons 1.60 Flt | PMDC 2 By CTE 35T wash'd | PMDC 2 CE/KDL 35T wash'd |
| **As Rec'd** | | | | | | | | | | | | | | | | | | | |
| $H_2O$ | 32.0 | 32.0 | 32.0 | 32.0 | 30.9 | 32.64 | 32.0 | 22.23 | 28.79 | 33.2 | 31.55 | 32.0 | 32.0 | 31.55 | 31.55 | 30.40 | 31.51 | 32.31 | 33.3 |
| Ash | 18.9 | 16.7 | 16.7 | 17.9 | 14.9 | 20.59 | 24.8 | 24.26 | 23.18 | 7.6 | 17.02 | 22.0 | 26.4 | 13.96 | 10.77 | 15.82 | 11.79 | 13.07 | 12.9 |
| VM | 25.6 | 26.2 | 26.5 | 26.0 | 26.8 | 24.68 | 23.6 | 33.23 | 27.62 | 30.7 | 24.98 | 26.3 | 22.6 | 29.14 | 30.51 | 28. | 29.68 | 28.15 | 28.2 |
| FC | 23.5 | 25.1 | 24.8 | 24.1 | 27.5 | 21.89 | 19.4 | 20.28 | 20.21 | 28.5 | 24.45 | 19.7 | 18.8 | 25.35 | 27.17 | 25.02 | 27.02 | 26.47 | 26.6 |
| SUL | 5.5 | 5.7 | 4.9 | 5.3 | 3.8 | 4.25 | 4.2 | 3.96 | 3.49 | 2.5 | 6.10 | 5.5 | 6.2 | 3.62 | 4.50 | 2.88 | 2.79 | 2.71 | 3.2 |
| GCV-Btu/lb | 6,071 | 6,363 | 6,547 | 6,266 | 6,980 | 5,960 | 4,997 | 6,616 | 5,995 | 7,645 | 6,510 | 5,198 | 4,709 | 6,825 | 7,376 | 6,861 | 7,261 | 7,154 | 6,990 |
| HGI | 72 | 69 | 73 | 72 | 68.5 | 88.5 | 71 | 70 | 77 | 75 | 78 | 78 | 104 | 88.5 | 73 | - | - | 74 | 67 |
| **MAF** | | | | | | | | | | | | | | | | | | | |
| VM | 52.3 | 51.1 | 51.7 | 51.9 | 49.4 | 53.20 | 55.0 | 62.1 | 57.92 | 51.9 | 52.46 | 57.2 | 54.8 | 53.5 | 52.9 | 53.47 | 52.86 | 51.53 | 51.4 |
| FC | 47.7 | 48.9 | 48.3 | 48.1 | 50.6 | 46.80 | 45.0 | 37.9 | 42.08 | 48.1 | 47.54 | 42.8 | 45.2 | 46.5 | 47.1 | 46.53 | 47.64 | 48.47 | 48.6 |
| SUL | 11.3 | 11.2 | 9.5 | 10.7 | 7.0 | 9.09 | 8.6 | 7.4 | 7.26 | 4.2 | 11.86 | 11.9 | 14.9 | 6.6 | 7.8 | 5.36 | 4.92 | 4.96 | 5.8 |
| GCV | 12,300 | 12,400 | 12,760 | 12,500 | 12,880 | 12,745 | 11,540 | 12,365 | 12,481 | 12,910 | 12,660 | 11,278 | 11,320 | 12,530 | 12,787 | 12,758 | 12,807 | 13,098 | 12,770 |
| $SO_2$/MKBtu | 18.24 | 18.02 | 14.84 | 17.06 | 10.89 | 14.26 | 16.64 | 11.97 | 11.64 | 6.54 | 18.74 | 21.23 | 26.28 | 10.61 | 12.20 | 8.40 | 7.68 | 7.58 | 9.10 |
| Ash/MKBtu | 31.20 | 26.26 | 25.52 | 28.53 | 21.35 | 34.54 | 49.61 | 36.67 | 38.67 | 9.94 | 26.14 | 42.46 | 55.88 | 20.45 | 14.60 | 23.05 | 16.24 | 18.27 | 18.49 |
| **Forms of S** | | | | | | | | | | | | | | | | | | | |
| Pyrite | 4.6 | 3.5 | 3.5 | 4.0 | - | 4.95 | - | 3.36 | 2.93 | - | 6.56 | - | - | 2.63 | 2.35 | 2.14 | 1.91 | 2.00 | - |
| Sulphate | 1.3 | 0.9 | 0.7 | 1.0 | - | 0.05 | - | 0.30 | 0.25 | - | 0.20 | - | - | 0.08 | 0.14 | 0.30 | 0.30 | 0.20 | - |
| Organic | 2.3 | 3.5 | 2.6 | 2.6 | - | 1.30 | - | 1.43 | 1.72 | - | 2.15 | - | - | 2.58 | 4.08 | 1.70 | 1.86 | 1.80 | - |
| TOTAL (DRY) | 8.3 | 7.9 | 6.7 | 7.7 | 5.5 | 6.30 | 6.1 | 5.09 | 4.90 | 3.7 | 8.91 | 8.1 | 9.1 | 5.29 | 6.57 | 4.14 | 4.07 | 4.00 | 4.7 |
| **ULT./DRY** | | | | | | | | | | | | | | | | | | | |
| Ash | 27.3 | 24.5 | 23.8 | 26.3 | 21.50 | 30.56 | 36.4 | 31.20 | 32.55 | 11.4 | 24.86 | 31.4 | 38.7 | 20.40 | 15.73 | 22.73 | 17.22 | 19.31 | 19.1 |
| $H_2$ | 3.7 | 4.1 | 4.0 | 3.8 | 4.47 | 3.30 | 3.6 | 3.76 | 3.59 | 5.1 | 4.00 | 3.7 | 3.0 | 4.32 | 4.52 | 4.22 | 4.48 | 4.28 | 4.7 |
| C | 46.2 | 49.3 | 51.8 | 48.1 | 56.20 | 52.87 | 40.6 | 48.14 | 46.94 | 65.5 | 51.29 | 41.4 | 38.1 | 56.30 | 58.97 | 55.30 | 60.04 | 59.39 | 57.2 |
| $N_2$ | 0.8 | 0.8 | 0.9 | 0.8 | 0.93 | 1.02 | 0.7 | 0.72 | 0.73 | 1.4 | 1.04 | 0.8 | 0.8 | 1.18 | 1.12 | 0.96 | 0.96 | 0.87 | 1.2 |
| S | 8.3 | 7.9 | 6.7 | 7.7 | 5.50 | 6.30 | 6.1 | 5.09 | 4.90 | 3.7 | 8.91 | 8.1 | 9.1 | 5.29 | 6.57 | 4.14 | 4.07 | 4.00 | 4.7 |
| $O_2$ | 13.7 | 13.4 | 12.7 | 13.3 | 11.40 | 5.95 | 12.6 | 10.92 | 10.74 | 12.9 | 9.90 | 13.6 | 10.3 | 12.51 | 13.19 | 12.45 | 13.02 | 11.83 | 13.1 |
| **ULT./MAF** | | | | | | | | | | | | | | | | | | | |
| $H_2$ | 5.1 | 5.4 | 5.3 | 5.2 | 5.69 | 4.75 | 5.7 | 5.47 | 5.32 | 5.8 | 5.32 | 5.5 | 4.9 | 5.43 | 5.36 | 5.46 | 5.41 | 5.30 | 5.8 |
| C | 63.5 | 65.3 | 68.0 | 65.2 | 71.59 | 76.14 | 63.8 | 69.97 | 69.59 | 73.9 | 68.26 | 61.2 | 62.2 | 70.73 | 69.86 | 71.57 | 72.53 | 73.60 | 70.7 |
| $N_2$ | 1.1 | 1.1 | 1.2 | 1.1 | 1.18 | 1.47 | 1.1 | 1.05 | 1.06 | 1.6 | 1.38 | 1.2 | 1.3 | 1.48 | 1.33 | 1.24 | 1.16 | 1.08 | 1.5 |
| S | 11.4 | 10.4 | 8.8 | 10.5 | 7.01 | 9.07 | 9.6 | 7.40 | 7.26 | 4.2 | 11.86 | 12.0 | 14.6 | 6.65 | 7.80 | 5.36 | 4.92 | 4.96 | 5.8 |
| $O_2$ | 18.9 | 17.8 | 16.7 | 18.0 | 14.52 | 8.57 | 19.8 | 15.87 | 15.92 | 14.5 | 13.18 | 20.1 | 16.8 | 15.72 | 15.65 | 16.11 | 15.73 | 14.66 | 16.2 |
| **Mineral** | | | | | | | | | | | | | | | | | | | |
| $SiO_2$ | 31.40 | 34.31 | 33.79 | 32.70 | 33.10 | 37.63 | 43.6 | 41.46 | 41.63 | 21.1 | 30.61 | 40.9 | 42.9 | 35.73 | 30.61 | 39.60 | 34.49 | 36.28 | 39.0 |
| $Al_2O_3$ | 18.52 | 20.39 | 22.48 | 20.18 | 20.30 | 26.38 | 27.2 | 28.00 | 26.46 | 14.7 | 19.39 | 24.6 | 20.4 | 22.92 | 19.25 | 27.59 | 24.68 | 26.25 | 22.9 |
| $TiO_2$ | - | - | - | - | 2.66 | 2.14 | 1.9 | 2.12 | 2.09 | 1.1 | 1.58 | 1.6 | 1.5 | 1.21 | 1.48 | 2.07 | 1.94 | 1.86 | 1.5 |
| CaO | 4.74 | 4.11 | 4.53 | 4.55 | 2.71 | 3.44 | 3.3 | 3.02 | 3.03 | 9.9 | 2.98 | 2.5 | 2.0 | 3.32 | 5.74 | 3.79 | 5.07 | 5.14 | 5.3 |
| $K_2O$ | 0.63 | 0.59 | 0.61 | 0.62 | 0.64 | 0.41 | 0.7 | 0.43 | 0.53 | 0.4 | 0.48 | 0.2 | 0.6 | 0.21 | 0.65 | 0.39 | 0.48 | 0.51 | 0.6 |
| MgO | 2.33 | 1.66 | 2.62 | 2.28 | 2.55 | 2.11 | 1.3 | 1.94 | 1.76 | 3.8 | 2.25 | 1.3 | 1.2 | 3.28 | 5.57 | 2.98 | 3.80 | 2.77 | 2.3 |
| $Na_2O$ | 1.34 | 0.75 | 1.19 | 1.18 | 2.18 | 0.80 | 0.7 | 0.68 | 0.59 | 2.9 | 0.86 | 0.8 | 0.7 | 1.12 | 1.40 | 1.46 | 1.83 | 1.51 | 1.2 |
| $Fe_2O_3$ | 32.44 | 29.81 | 26.84 | 30.23 | 21.60 | 20.91 | 17.2 | 17.96 | 16.79 | 32.4 | 33.97 | 22.6 | 27.0 | 23.06 | 26.41 | 17.30 | 19.42 | 16.47 | 19.3 |
| $P_2O_5$ | - | - | - | - | 1.36 | 0.58 | - | 0.08 | 0.09 | - | 0.66 | - | - | 0.57 | 0.67 | 0.08 | 0.07 | 0.10 | - |
| $SO_3$ | 6.42 | 5.65 | 6.30 | 6.23 | 9.35 | 4.90 | 3.9 | 3.91 | 4.23 | 14.7 | 6.63 | 3.2 | 2.7 | 7.08 | 9.33 | 4.60 | 8.01 | 6.90 | 6.4 |
| SrO | - | - | - | - | - | - | - | 0.25 | 0.19 | - | - | - | - | - | - | 0.10 | 0.16 | 0.09 | - |
| BaO | - | - | - | - | - | - | - | 0.09 | 0.07 | - | - | - | - | - | - | 0.02 | 0.02 | 0.04 | - |
| $Mn_3O_4$ | - | - | - | - | - | - | - | 0.02 | 0.03 | - | - | - | - | - | - | 0.02 | 0.02 | 0.04 | - |
| B/A Ratio | 0.83 | 0.67 | 0.64 | 0.73 | 0.53 | 0.42 | 0.32 | 0.34 | 0.31 | 1.34 | 0.79 | 0.41 | 0.48 | 0.51 | 0.73 | 0.37 | 0.50 | 0.44 | 0.45 |
| Fouling | SEV | HIGH | HIGH | HIGH | SEV | MED | MED | MED | LOW | SEV | HIGH | MED | MED | HIGH | SEV | HIGH | HIGH | HIGH | HIGH |
| Slagging | SEV | SEV | SEV | SEV | SEV | SEV | MED | MED | MED | SEV | SEV | SEV | SEV | SEV | SEV | MED | MED | MED | HIGH |
| $Fe_2O_3$/CaO | 6.84 | 7.25 | 5.92 | 6.64 | 7.97 | 6.08 | 5.21 | 5.95 | 5.54 | 3.27 | 11.40 | 9.04 | 13.50 | 6.95 | 4.60 | 4.56 | 3.83 | 3.59 | 3.64 |
| $Fe_2O_3$/CaO+MgO | 4.59 | 5.17 | 3.75 | 4.43 | 4.11 | 3.77 | 3.74 | 3.59 | 3.51 | 2.36 | 6.50 | 5.95 | 8.44 | 3.49 | 2.84 | 2.56 | 2.19 | 2.34 | 2.64 |
| $SiO_2/Al_2O_3$ | 1.70 | 1.64 | 1.50 | 1.62 | 1.63 | 1.43 | 1.60 | 1.48 | 1.46 | 1.44 | 1.58 | 1.66 | 2.10 | 1.56 | 1.59 | 1.44 | 1.40 | 1.38 | 1.70 |
| $SiO_2$ Pct. | 44.28 | 48.63 | 49.85 | 46.58 | 55.20 | 58.71 | 66.67 | 64.36 | 65.86 | 31.40 | 43.85 | 60.77 | 58.69 | 54.64 | 46.15 | 62.20 | 54.94 | 57.90 | 59.18 |
| **Ash Fusion** | | | | | | | | | | | | | | | | | | | |
| **Red. (DF)** | | | | | | | | | | | | | | | | | | | |
| Init. | 2,400 | 2,370 | 2,400 | 2,390 | - | 2,085 | 2,990 | 2,290 | 2,470 | 1,990 | 1,950 | 2,100 | 2,120 | 2,095 | 2,045 | 2,125 | 2,150 | 2,150 | 2,040 |
| Soft. | ? | ? | ? | ? | - | 2,115 | 2,430 | 2,440 | 2,530 | 2,040 | 2,005 | 2,120 | 2,250 | 2,110 | 2,065 | 2,230 | 2,200 | 2,200 | 2,350 |
| Hemi. | 2,515 | 2,535 | 2,500 | 2,515 | - | 2,155 | 2,470 | 2,510 | 2,570 | 2,050 | 2,010 | 2,370 | 2,330 | 2,125 | 2,070 | 2,325 | 2,250 | 2,250 | 2,410 |
| Fluid | 2,570 | 2,570 | 2,550 | 2,570 | - | 2,185 | 2,520 | 2,565 | 2,610 | 2,090 | 2,040 | 2,430 | 2,380 | 2,170 | 2,100 | 2,440 | 2,300 | 2,310 | 2,440 |
| **Oxy. (DF)** | | | | | | | | | | | | | | | | | | | |
| Init. | 2,400 | 2,370 | 2,400 | 2,390 | - | 2,460 | - | 2,400 | 2,610 | - | 2,215 | - | - | 2,200 | 2,235 | 2,440 | 2,330 | 2,390 | - |
| Soft. | ? ? | ? ? | ? ? | ? ? | - | 2,545 | - | 2,550 | 2,670 | - | 2,370 | - | - | 2,465 | 2,405 | 2,530 | 2,420 | 2,460 | - |
| Hemi. | 2,515 | 2,535 | 2,500 | 2,515 | - | 2,580 | - | 2,620 | 2,700 + | - | 2,475 | - | - | 2,485 | 2,440 | 2,605 | 2,505 | 2,510 | - |
| Fluid | 2,570 | 2,570 | 2,550 | 2,570 | - | 2,600 | - | 2,680 | 2,700 + | - | 2,590 | - | - | 2,510 | 2,550 | 2,675 | 2,570 | 2,550 | - |



LPS/B4101/J11

TABLE 4.1-2

COMPOSITE DRILL CORE ANALYSES
UNWASHED COAL (BOILER SPECIFICATION BASIS)

| Source | Mean % | W-A5 % | W-A3 % | W-A2 LA | W-B2 % | W-C2 HA | W-2-AVG % | W-A1 LF | W-B1 % | W-C1 HA |
|---|---|---|---|---|---|---|---|---|---|---|
| Ash | 36.00 | 32.15 | 28.07 | 27.77 | 30.51 | 41.87 | 33.38 | 29.42 | 29.23 | 41.00 |
| VM | 34.60 | 36.87 | 38.05 | 39.15 | 38.89 | 32.69 | 36.91 | 39.58 | 39.03 | 35.32 |
| FC | 29.40 | 30.98 | 33.88 | 33.08 | 30.60 | 25.44 | 29.71 | 31.00 | 31.74 | 23.67 |
| Sul | 7.26 | 8.87 | 7.54 | 8.26 | 8.37 | 8.46 | 8.36 | 8.85 | 9.85 | 7.65 |
| Btu/lb | 7500 | 7917 | 8540 | 8534 | 8038 | 6060 | 7544 | 8292 | 8050 | 6592 |
| $H_2O$ | 32.00 | 35.00 | 40.00 | 45.00 | 36.00 | 25.00 | 32.00 | 38.00 | 36.00 | 32.00 |
| Ash | 24.48 | 20.90 | 16.84 | 15.27 | 19.53 | 31.46 | 22.70 | 18.24 | 18.71 | 27.88 |
| $H_2$ | 2.12 | 2.05 | 2.06 | 1.91 | 2.15 | 2.07 | 2.18 | 2.18 | 2.12 | 1.94 |
| C | 29.12 | 29.21 | 30.02 | 26.81 | 29.89 | 26.71 | 29.70 | 29.27 | 29.56 | 25.94 |
| $N_2$ | .55 | .50 | .56 | .44 | .69 | .56 | .60 | .54 | .67 | .45 |
| Sul | 4.94 | 5.77 | 4.52 | 4.54 | 5.36 | 6.35 | 5.68 | 5.49 | 6.30 | 5.20 |
| $O_2$ | 6.79 | 6.57 | 6.00 | 6.03 | 6.38 | 7.91 | 7.14 | 6.28 | 6.04 | 6.59 |
| Btu/lb | 5100 | 5146 | 5124 | 4694 | 5144 | 4545 | 5130 | 5141 | 5152 | 4483 |
| PCT EFF | 82.00 | 81.59 | 80.72 | 78.47 | 81.49 | 82.88 | 82.17 | 80.87 | 81.48 | 81.15 |
| TPH Coal | 384 | 383 | 388 | 436 | 383 | 426 | 331 | 386 | 383 | 442 |
| TPD $SO_2$ | 574 | 667 | 531 | 599 | 621 | 819 | 654 | 641 | 719 | 694 |
| Indices | | | | | | | | | | |
| Fouling | Med | Med | Med | Med | Med | Low | Med | Med | Med | Low |
| Slagging | Sev | Sev | Sev | Sev | Sev | Sev | Sev | Sev | Sev | Sev |

| Source | E-A3 % | E-A2 % | E-B2 % | E-C2 HA | E-2-AVG % | E-A1 LF | E-B1 LA | E-C1 % | E-1-AVG % |
|---|---|---|---|---|---|---|---|---|---|
| Ash | 34.93 | 35.07 | 26.17 | 39.89 | 33.71 | 27.26 | 27.83 | 35.10 | 30.06 |
| VM | 34.82 | 33.95 | 38.01 | 32.15 | 34.70 | 39.28 | 36.94 | 33.57 | 36.59 |
| FC | 30.25 | 30.98 | 35.82 | 27.96 | 31.59 | 33.46 | 35.23 | 31.33 | 33.35 |
| Sul | 6.03 | 6.02 | 6.94 | 6.48 | 6.48 | 7.45 | 7.36 | 6.79 | 7.20 |
| Btu/lb | 7870 | 7704 | 8950 | 6850 | 7834 | 8882 | 8821 | 7528 | 8410 |
| $H_2O$ | 34.00 | 33.00 | 43.00 | 35.00 | 34.00 | 42.00 | 45.00 | 32.00 | 39.00 |
| Ash | 23.05 | 23.50 | 14.92 | 25.93 | 22.25 | 15.81 | 15.31 | 23.87 | 18.34 |
| $H_2$ | 2.20 | 2.16 | 2.04 | 1.89 | 2.14 | 2.08 | 2.01 | 2.03 | 2.08 |
| C | 29.07 | 29.57 | 28.91 | 25.52 | 29.50 | 29.44 | 27.21 | 28.22 | 28.82 |
| $N_2$ | .54 | .58 | .54 | .48 | .56 | .53 | .50 | .53 | .53 |
| Sul | 3.98 | 4.08 | 3.96 | 4.21 | 4.28 | 4.32 | 4.05 | 4.62 | 4.39 |
| $O_2$ | 7.16 | 7.16 | 6.63 | 6.97 | 7.27 | 5.82 | 5.92 | 8.73 | 6.84 |
| Btu/lb | 5194 | 5162 | 5102 | 4453 | 5170 | 5152 | 4852 | 5119 | 5130 |
| PCT EFF | 81.34 | 81.76 | 79.52 | 80.10 | 81.55 | 80.08 | 78.52 | 81.50 | 80.36 |
| TPH Coal | 380 | 381 | 396 | 450 | 381 | 389 | 422 | 385 | 390 |
| TPD $SO_2$ | 458 | 464 | 474 | 573 | 493 | 508 | 516 | 538 | 517 |
| Indices | | | | | | | | | |
| Fouling | Med | Med | Med | Med | Med | Med | High | Med | Med |
| Slagging | High | Med | Sev | High | High | Sev | Sev | High | Sev |

| Source | C-A3 LF | C-B3 % | C-3-AVG % | C-A2 LA | C-B2 % | C-C2 % | C-2-AVG % | C-A1 % |
|---|---|---|---|---|---|---|---|---|
| Ash | 31.87 | 32.18 | 32.02 | 27.68 | 31.97 | 31.89 | 30.51 | 29.66 |
| VM | 36.29 | 36.87 | 36.58 | 38.18 | 37.15 | 37.09 | 37.68 | 38.54 |
| FC | 31.84 | 30.95 | 31.39 | 34.14 | 30.88 | 31.02 | 32.01 | 31.08 |
| Sul | 8.03 | 6.34 | 7.18 | 8.46 | 7.89 | 7.57 | 7.97 | 8.99 |
| Btu/lb | 8236 | 8002 | 8119 | 8826 | 8116 | 8170 | 8371 | 8442 |
| $H_2O$ | 38.00 | 36.00 | 37.00 | 45.00 | 37.00 | 37.00 | 39.00 | 39.00 |
| Ash | 19.76 | 20.60 | 20.17 | 15.22 | 20.14 | 10.09 | 18.61 | 18.09 |
| $H_2$ | 1.84 | 2.09 | 1.96 | 1.84 | 2.15 | 2.26 | 2.10 | 2.14 |
| C | 28.51 | 30.08 | 29.29 | 26.83 | 28.80 | 28.95 | 28.56 | 28.68 |
| $N_2$ | .58 | .60 | .59 | .52 | .55 | .53 | .54 | .51 |
| Sul | 4.98 | 4.06 | 4.52 | 4.65 | 4.97 | 4.77 | 4.86 | 5.48 |
| $O_2$ | 6.33 | 6.57 | 6.47 | 5.94 | 6.39 | 6.40 | 6.33 | 6.10 |
| Btu/lb | 5106 | 5121 | 5115 | 4855 | 5113 | 5147 | 5106 | 5150 |
| PCT EFF | 81.93 | 81.42 | 81.12 | 78.55 | 80.87 | 80.81 | 80.39 | 80.51 |
| TPH Coal | 384 | 385 | 387 | 421 | 388 | 386 | 391 | 387 |
| TPD $SO_2$ | 578 | 473 | 529 | 592 | 584 | 557 | 575 | 642 |
| Indices | | | | | | | | |
| Fouling | Med | Med | Med | High | Med | Med | Med | High |
| Slagging | Sev | Sev | Sev | Sev | Sev | Sev | Sev | Sev |

LA = Low Ash Coal in Boiler Specification
HA = High Ash Coal in Boiler Specification
LF = Low Ash Fusion Coal in Boiler Specification

LPS/B4101/D11

TABLE 4.1-3

COMPOSITE DRILL CORE ANALYSES
WASHED COAL (BOILER SPECIFICATION BASIS)

| Source | Mean % | W-A5 % | W-A3 LA | W-A2 % | W-B2 % | W-C2 % | W-2-AVG % | W-A1 LF | W-B1 LF | W-C1 % | W-1-A % |
|---|---|---|---|---|---|---|---|---|---|---|---|
| Ash | 23.08 | 17.58 | 16.86 | 20.69 | 18.69 | 20.72 | 20.03 | 24.33 | 22.22 | 24.13 | 23.56 |
| VM | 38.14 | 41.70 | 42.51 | 40.99 | 41.34 | 39.56 | 40.63 | 40.68 | 40.89 | 39.79 | 40.45 |
| FC | 38.78 | 40.72 | 40.63 | 38.32 | 39.97 | 39.72 | 39.34 | 34.99 | 36.89 | 36.08 | 35.99 |
| Sul | 6.62 | 6.53 | 5.24 | 7.03 | 5.99 | 6.28 | 6.43 | 7.42 | 8.07 | 6.80 | 7.43 |
| Btu/lb | 9538 | 10,108 | 10,243 | 9605 | 10,079 | 9420 | 9701 | 9160 | 9256 | 9210 | 9118 |
| $H_2O$ | 35.00 | 35.00 | 35.00 | 35.00 | 35.00 | 35.00 | 35.00 | 35.00 | 35.00 | 35.00 | 35.00 |
| Ash | 15.00 | 11.43 | 10.96 | 13.45 | 12.15 | 13.47 | 13.02 | 15.81 | 14.44 | 15.68 | 15.31 |
| $H_2$ | 2.57 | 2.49 | 2.55 | 2.44 | 2.63 | 2.41 | 2.49 | 2.40 | 2.44 | 2.45 | 2.4[illegible] |
| C | 34.50 | 37.11 | 37.86 | 35.05 | 36.81 | 34.50 | 35.45 | 32.89 | 33.55 | 33.95 | 33.46 |
| $N_2$ | .64 | .79 | .75 | .66 | .74 | .68 | .70 | .64 | .62 | .69 | .65 |
| Sul | 4.30 | 4.24 | 3.41 | 4.57 | 3.89 | 4.08 | 4.18 | 4.82 | 5.25 | 4.42 | 4.83 |
| $O_2$ | 7.99 | 8.94 | 9.47 | 8.83 | 8.78 | 9.86 | 9.16 | 8.44 | 9.70 | 7.81 | 8.32 |
| Btu/lb | 6200 | 6570 | 6658 | 6243 | 6551 | 6123 | 6306 | 5954 | 6016 | 5987 | 5927 |
| PCT EFF | 82.36 | 82.96 | 82.96 | 82.54 | 82.76 | 82.26 | 82.53 | 82.06 | 82.22 | 82.34 | 82.21 |
| TPH Coal | 315 | 295 | 291 | 312 | 297 | 319 | 309 | 329 | 325 | 326 | 330 |
| TPD $SO_2$ | 410 | 378 | 300 | 431 | 349 | 394 | 391 | 480 | 516 | 436 | 482 |
| Indices | | | | | | | | | | | |
| Fouling | High | Sev | High | High | High | High | Med | High | High | Med | High |
| Slagging | Sev | Sev | Sev | Sev | Sev | Sev | Sev | Sev | Sev | Sev | Sev |

| Source | E-A3 HA | E-A2 % | E-B2 LA | E-C2 HA | E-2-AVG % | E-A1 LA | E-B1 % | E-C1 % | E-1-AVG % |
|---|---|---|---|---|---|---|---|---|---|
| Ash | 29.25 | 17.90 | 17.04 | 31.39 | 22.11 | 17.37 | 21.91 | 26.09 | 21.79 |
| VM | 36.88 | 40.73 | 41.73 | 34.71 | 39.06 | 43.64 | 39.75 | 37.70 | 40.37 |
| FC | 33.87 | 41.37 | 41.23 | 33.90 | 38.96 | 38.99 | 38.34 | 36.21 | 37.85 |
| Sul | 5.10 | 5.19 | 5.87 | 5.72 | 5.60 | 5.65 | 5.94 | 6.43 | 6.01 |
| Btu/lb | 8601 | 10,381 | 10,325 | 8293 | 9666 | 10,389 | 9899 | 8821 | 9703 |
| $H_2O$ | 35.00 | 35.00 | 35.00 | 35.00 | 35.00 | 35.00 | 35.00 | 35.00 | 35.00 |
| Ash | 19.01 | 11.64 | 11.08 | 20.40 | 14.37 | 11.29 | 14.24 | 16.96 | 14.16 |
| $H_2$ | 2.57 | 2.91 | 2.88 | 3.11 | 2.97 | 2.94 | 2.80 | 2.61 | 2.78 |
| C | 32.32 | 38.97 | 39.03 | 30.25 | 36.09 | 38.67 | 36.39 | 32.81 | 35.96 |
| $N_2$ | .59 | .68 | .70 | .55 | .64 | .63 | .58 | .57 | .60 |
| Sul | 3.32 | 3.37 | 3.82 | 3.72 | 3.64 | 3.67 | 3.86 | 4.18 | 3.91 |
| $O_2$ | 7.20 | 7.43 | 7.49 | 6.97 | 7.33 | 7.79 | 7.14 | 7.87 | 7.60 |
| Btu/lb | 5591 | 6748 | 6711 | 5390 | 6283 | 6753 | 6434 | 5734 | 6307 |
| PCT EFF | 81.77 | 83.12 | 83.17 | 80.91 | 82.47 | 83.03 | 82.70 | 81.88 | 82.57 |
| TPH Coal | 352 | 287 | 288 | 369 | 310 | 287 | 302 | 343 | 309 |
| TPD $SO_2$ | 353 | 292 | 333 | 415 | 342 | 318 | 353 | 433 | 365 |
| Indices | | | | | | | | | |
| Fouling | Med | High | High | Med | High | High | High | Med | High |
| Slagging | Med | Sev | Sev | High | Sev | Sev | Sev | High | Sev |

| Source | C-A3 LF | C-B3 HA | C-3-AVG % | C-A2 % | C-B2 % | C-C2 % | C-2-AVG % | C-A1 % |
|---|---|---|---|---|---|---|---|---|
| Ash | 27.49 | 28.26 | 27.87 | 22.75 | 21.57 | 23.03 | 22.45 | 18.74 |
| VM | 37.61 | 37.53 | 37.57 | 39.89 | 40.99 | 41.33 | 40.73 | 42.89 |
| FC | 34.90 | 34.21 | 34.55 | 37.36 | 37.44 | 35.64 | 36.81 | 38.37 |
| Sul | 7.09 | 5.34 | 6.21 | 7.12 | 6.71 | 5.98 | 6.60 | 7.02 |
| Btu/lb | 8821 | 8651 | 8736 | 9627 | 9679 | 9645 | 9650 | 10,232 |
| $H_2O$ | 35.00 | 35.00 | 35.00 | 35.00 | 35.00 | 35.00 | 35.00 | 35.00 |
| Ash | 17.87 | 18.37 | 18.12 | 14.79 | 14.02 | 14.97 | 14.59 | 12.18 |
| $H_2$ | 2.26 | 2.30 | 2.30 | 2.62 | 2.62 | 2.53 | 2.59 | 2.77 |
| C | 32.87 | 32.04 | 32.04 | 34.33 | 35.05 | 34.91 | 34.76 | 36.45 |
| $N_2$ | .64 | .61 | .62 | .64 | .64 | .62 | .63 | .67 |
| Sul | 4.61 | 3.47 | 4.04 | 4.63 | 4.36 | 3.89 | 4.29 | 4.56 |
| $O_2$ | 6.76 | 8.21 | 7.48 | 8.00 | 8.31 | 8.09 | 8.13 | 8.37 |
| Btu/lb | 5734 | 5623 | 5678 | 6258 | 6291 | 6269 | 6273 | 6651 |
| PCT EFF | 82.34 | 81.79 | 82.07 | 82.31 | 82.43 | 82.45 | 82.40 | 82.67 |
| TPH Coal | 341 | 350 | 345 | 312 | 310 | 311 | 311 | 293 |
| TPD $SO_2$ | 475 | 367 | 422 | 437 | 409 | 366 | 404 | 403 |
| Indices | | | | | | | | |
| Fouling | High | Med | Med | High | High | Med | High | High |
| Slagging | Sev | High | Sev | Sev | Sev | High | Sev | Sev |

LA = Low Ash Coal in Boiler Specification
LF = Low Ash Fusion Coal in Boiler Specification
HA = High Ash Coal in Boiler Specification

LPS/B4101/011

TABLE 4.2-1 EFFECTS OF TOTAL CLEANING ON ASH/SULFUR REMOVAL AND BTU RECOVERY (SEAM ONLY)

| S. G. SEP. | Cumulative % Wt | Cumulative % Ash | Cumulative % Sul | Cumulative BTU/LB | Lbs./$10^6$ BTU Ash Burden | Lbs./$10^6$ BTU $SO_2$ Burden | % Ash Reduction | % $SO_2$ Reduction | BTU Recovery |
|---|---|---|---|---|---|---|---|---|---|
| 1.30 | 45.2 | 9.83 | 2.98 | 11772 | 8.35 | 5.06 | 77.5 | 55.5 | 63.2 |
| 1.45 | 62.7 | 13.71 | 3.55 | 11147 | 12.30 | 6.37 | 66.9 | 44.0 | 83.0 |
| 1.60 | 73.3 | 17.52 | 3.98 | 10540 | 16.62 | 7.55 | 55.3 | 33.7 | 91.7 |
| 1.70 | 78.0 | 19.71 | 4.13 | 10195 | 19.33 | 8.10 | 48.0 | 28.8 | 94.4 |
| 1.80 | 83.5 | 22.73 | 4.14 | 9733 | 23.35 | 8.51 | 37.1 | 25.2 | 96.5 |
| 1.90 | 88.8 | 25.71 | 4.09 | 9281 | 27.70 | 8.81 | 25.4 | 22.6 | 98.0 |
| 2.10 | 96.3 | 29.91 | 4.02 | 8646 | 34.59 | 9.30 | 6.9 | 18.3 | 98.9 |
| 2.80 | 100.0 | 31.28 | 4.79 | 8421 | 37.15 | 11.38 | 0 | 0 | 100.0 |

TABLE 4.2-2 EFFECTS OF TOTAL CLEANING ON ASH/SULFUR REMOVAL AND BTU RECOVERY
(SEAM + 10% DILUTION)

| S. G. SEP. | Cumulative % Wt | Cumulative % Ash | Cumulative % Sul | Cumulative BTU/LB | Lbs./$10^6$ BTU Ash Burden | Lbs./$10^6$ BTU $SO_2$ Burden | % Ash Reduction | % $SO_2$ Reduction | BTU Recovery |
|---|---|---|---|---|---|---|---|---|---|
| 1.30 | 40.68 | 9.83 | 2.98 | 11772 | 8.35 | 5.06 | 82.4 | 57.2 | 62.4 |
| 1.45 | 56.43 | 13.71 | 3.55 | 11147 | 12.30 | 6.37 | 74.1 | 46.1 | 82.0 |
| 1.60 | 65.97 | 17.52 | 3.98 | 10540 | 16.62 | 7.55 | 65.0 | 36.1 | 90.6 |
| 1.70 | 70.20 | 19.71 | 4.13 | 10195 | 19.33 | 8.10 | 59.3 | 31.4 | 93.3 |
| 1.80 | 75.91 | 22.96 | 4.15 | 9698 | 23.67 | 8.56 | 50.2 | 27.5 | 96.0 |
| 1.90 | 80.97 | 26.06 | 4.10 | 9228 | 28.24 | 8.89 | 40.6 | 24.7 | 97.4 |
| 2.10 | 89.46 | 31.22 | 3.97 | 8455 | 36.92 | 9.39 | 22.3 | 20.5 | 98.6 |
| 2.8 | 100.00 | 36.45 | 4.53 | 7672 | 47.51 | 11.81 | 0 | 0 | 100.0 |

TABLE 4.2-3 EFFECTS OF PARTIAL CLEANING ON ASH/SULFUR REMOVAL AND BTU RECOVERY

(SEAM ONLY - 4" x 1/2" CLEANED, 1/2" x 0 RAW)

| S. G. SEP. | Cumulative % Wt | Cumulative % Ash | Cumulative % Sul | Cumulative BTU/LB | Lbs./$10^6$ BTU Ash Burden | Lbs./$10^6$ BTU $SO_2$ Burden | % Ash Reduction | % $SO_2$ Reduction | BTU Recovery |
|---|---|---|---|---|---|---|---|---|---|
| 1.30 | 71.50 | 22.86 | 4.56 | 9670 | 23.64 | 9.43 | 36.4 | 17.1 | 82.10 |
| 1.45 | 79.93 | 23.13 | 4.57 | 9640 | 23.99 | 9.48 | 35.4 | 16.7 | 91.50 |
| 1.60 | 85.09 | 24.40 | 4.61 | 9449 | 25.82 | 9.75 | 30.5 | 14.3 | 95.5 |
| 1.70 | 87.47 | 25.27 | 4.63 | 9317 | 27.12 | 9.94 | 27.0 | 12.7 | 96.8 |
| 1.80 | 91.03 | 26.94 | 4.59 | 9033 | 29.82 | 10.16 | 19.7 | 10.7 | 97.6 |
| 1.90 | 94.47 | 28.66 | 4.50 | 8781 | 32.64 | 10.24 | 12.1 | 10.0 | 98.5 |
| 2.10 | 98.33 | 30.69 | 4.43 | 8482 | 36.18 | 10.45 | 2.6 | 8.2 | 99.0 |
| 2.80 | 100.00 | 31.28 | 4.79 | 8421 | 37.15 | 11.38 | 0 | 0 | 100.0 |

TABLE 4.2-4 EFFECTS OF AIR DRYING ON ASH/SULFUR REMOVAL AND BTU RECOVERY

| Hrs. | S.G. Sep. | Cum. Wt. | Lbs/$10^6$ BTU Ash Burden | Lbs/$10^6$ BTU $SO_2$ Burden | % Ash Red. | % $SO_2$ Red. | BTU Recovery |
|---|---|---|---|---|---|---|---|
| 0 | 1.60 | 74.7 | 14.54 | 7.04 | 55.9 | 32.6 | 92.0 |
| 24 | 1.60 | 74.2 | 13.51 | 7.55 | 60.1 | 31.7 | 91.9 |
| 48 | 1.60 | 73.6 | 14.51 | 7.09 | 57.34 | 33.7 | 91.5 |
| 96 | 1.60 | 71.2 | 12.87 | 6.71 | 61.0 | 36.2 | 89.3 |
| 0 | 1.70 | 74.2 | 16.47 | 7.40 | 50.1 | 29.1 | 94.0 |
| 24 | 1.70 | 77.7 | 16.73 | 7.90 | 50.6 | 28.1 | 93.9 |
| 48 | 1.70 | 77.1 | 16.44 | 7.42 | 51.7 | 30.7 | 93.5 |
| 96 | 1.70 | 73.5 | 13.85 | 6.98 | 58.0 | 33.7 | 91.0 |
| 0 | 1.80 | 85.0 | 21.05 | 7.99 | 36.2 | 23.5 | 96.8 |
| 24 | 1.80 | 82.3 | 19.76 | 8.29 | 41.6 | 25.1 | 95.9 |
| 48 | 1.80 | 81.5 | 19.03 | 7.79 | 43.3 | 27.2 | 95.5 |
| 96 | 1.80 | 77.6 | 16.05 | 7.41 | 51.3 | 29.6 | 93.5 |
| 0 | 1.90 | 87.6 | 23.03 | 8.11 | 30.2 | 22.3 | 97.6 |
| 24 | 1.90 | 87.3 | 26.29 | 8.55 | 22.4 | 22.7 | 97.5 |
| 48 | 1.90 | 85.8 | 22.51 | 8.04 | 33.8 | 24.9 | 97.0 |
| 96 | 1.90 | 81.2 | 18.42 | 7.70 | 44.1 | 26.7 | 95.1 |

TABLE 4.2-5 EFFECTS OF SIZE REDUCTION ON ASH/SULFUR REMOVAL AND BTU RECOVERY

| Size | S.G. Sep. | Cumulative % Wt | Cumulative % Ash | Cumulative % Sul. | BTU/LB | Lbs./$10^6$BTU Ash Burden | Lbs./$10^6$BTU $SO_2$ Burden | % Ash Reduction | % $SO_2$ Reduction | BTU Recovery |
|---|---|---|---|---|---|---|---|---|---|---|
| 4"x100M | 1.60 | 73.3 | 17.52 | 3.98 | 10540 | 16.62 | 7.55 | 55.3 | 33.7 | 91.7 |
| 4"x100M | 1.70 | 78.0 | 19.71 | 4.13 | 10195 | 19.33 | 8.10 | 48.0 | 29.8 | 94.4 |
| 4"x100M | 1.80 | 83.5 | 22.73 | 4.14 | 9733 | 23.35 | 8.51 | 37.1 | 25.2 | 96.5 |
| 4"x100M | 1.90 | 88.8 | 25.71 | 4.09 | 9281 | 27.70 | 8.81 | 25.4 | 22.6 | 98.0 |
| 4"x100M | 2.80 | 100.0 | 31.28 | 4.79 | 8421 | 37.15 | 11.38 | 0 | 0 | 100.0 |
| 3/4x100M | 1.60 | 74.7 | 15.78 | 3.82 | 10856 | 14.54 | 7.04 | 55.9 | 32.6 | 92.0 |
| 3/4x100M | 1.70 | 78.2 | 17.45 | 3.92 | 10597 | 16.47 | 7.40 | 50.1 | 29.1 | 94.0 |
| 3/4x100M | 1.80 | 85.0 | 21.13 | 4.01 | 10036 | 21.05 | 7.99 | 36.2 | 23.5 | 96.8 |
| 3/4x100M | 1.90 | 87.6 | 22.61 | 3.98 | 9816 | 23.03 | 8.11 | 30.2 | 22.3 | 97.6 |
| 3/4x100M | 2.80 | 100.0 | 29.08 | 4.60 | 8812 | 33.00 | 10.44 | 0 | 0 | 100.0 |

TABLE 4.2-6 SUMMARY OF WHOLE COAL ANALYSES

| Proximate Analysis | Raw | 1.80 Float | 1.60 Float |
|---|---|---|---|
| Moist (AR/DRY, MAF) | 22.23/ - / - | 30.40/ - / - | 31.51/ - / - |
| Ash | 24.26/31.20/ - | 15.82/22.73/ - | 11.79/17.22/ - |
| Volatile Matter | 33.23/42.73/62.1 | 28.76/41.32/53.47 | 29.68/43.34/52.36 |
| Fixed Carbon | 20.28/26.07/37.9 | 25.02/35.95/46.53 | 27.02/39.44/47.64 |
| Sulfur | 3.96/ 5.09/ 7.4 | 2.88/ 4.14/ 5.36 | 2.79/ 4.07/ 4.92 |
| H.H.V. | 6616/ 8507 /12365 | 6861/ 9858 /12758 | 7261/10602/12807 |
| Alk. as $Na_2O$ | 0.23/ 0.30/43.6 | 0.27/ 0.39/ 0.50 | 0.25/ 0.37/ 0.45 |
| **Sulfur Forms** | | | |
| Pyritic (AR/DRY) | 2.61/ 3.36 | 1.51/ 2.14 | 1.63/ 1.91 |
| Sulfate | 0.23/ 0.30 | 0.26/ 0.30 | 0.26/ 0.30 |
| Organic | 1.12/ 1.43 | 1.18/ 1.70 | 1.59/ 1.86 |
| **Water Soluble Alkalis** | | | |
| $Na_2O$ (AR/DRY) | 0.188/0.242 | 0.201/0.289 | 0.250/0.292 |
| $K_2O$ | 0.014/0.018 | 0.010/0.014 | 0.011/0.013 |
| **Fusion Temperatures (°F)** | | | |
| Initial Deform (RED/OX) | 2290/2400 | 2125/2440 | 2150/2330 |
| Softening | 2440/2550 | 2230/2530 | 2200/2420 |
| Hemi | 2510/2620 | 2325/2605 | 2250/2505 |
| Fluid | 2565/2680 | 2440/2675 | 2300/2570 |
| **Ultimate Analysis** | | | |
| Moist (AR/DRY) | 22.23/ - | 30.40/ - | 31.51/ - |
| Carbon | 37.44/48.14 | 38.49/55.30 | 41.12/60.04 |
| Hydrogen | 2.92/ 3.76 | 2.94/ 4.22 | 3.07/ 4.48 |
| Nitrogen | 0.56/ 0.72 | 0.67/ 0.96 | 0.66/ 0.96 |
| Chlorine | 0.13/ 0.17 | 0.14/ 0.20 | 0.14/ 0.21 |
| Sulfur | 3.96/ 5.09 | 2.88/ 4.14 | 2.79/ 4.07 |
| Ash | 24.26/31.20 | 15.82/22.73 | 11.79/17.22 |
| Oxygen (Diff) | 8.50/10.92 | 8.66/12.45 | 8.92/13.02 |
| **Mineral Analysis of Ash** | | | |
| $SiO_2$ | 41.46 | 39.60 | 34.49 |
| $Al_2O_3$ | 28.00 | 27.59 | 24.68 |
| $TiO_2$ | 2.12 | 2.07 | 1.94 |
| $Fe_2O_3$ | 17.96 | 17.30 | 19.42 |
| CaO | 3.02 | 3.79 | 5.07 |
| MgO | 1.98 | 2.98 | 3.80 |
| $K_2O$ | 0.43 | 0.39 | 0.48 |
| $Na_2O$ | 0.68 | 1.46 | 1.83 |
| $SO_3$ | 3.91 | 4.60 | 8.01 |
| $P_2O_5$ | 0.08 | 0.08 | 0.07 |
| SrO | 0.25 | 0.10 | 0.16 |
| BaO | 0.09 | 0.02 | 0.03 |
| $Mn_3O_4$ | 0.02 | 0.02 | 0.02 |
| **Miscellaneous** | | | |
| Eq. moisture (3-day) | 25.71 | 23.82 | 24.89 |
| Eq. moisture (5-day) | 26.43 | - | - |
| Hargrove Grind at 9.8% moisture | 70 | - | - |
| Bulk Resistivity | $9 \times 10^{11}$ OHM-CM | $4 \times 10^{11}$ OHM-CM | $2 \times 10^{11}$ OHM-CM |



285

TABLE 4.2-7 RAW VS CLEAN INDICIES

| Slagging: | Raw | 1.80 Float | 1.60 Float |
|---|---|---|---|
| Ash Fusion-Reducing (°F) | | | |
| Initial | 2290 | 2125 | 2150 |
| Soft | 2440 | 2230 | 2200 |
| Hemi | 2510 | 2325 | 2250 |
| Fluid | 2565 | 2440 | 2300 |
| Base - Acid Ratio | 0.34 | 0.37 | 0.50 |
| Silica-Alumina Ratio | 1.48 | 1.44 | 1.40 |
| Silica Value | 64.36 | 62.20 | 54.94 |
| Iron Ratio | 3.59 | 2.56 | 2.20 |
| Dolomite Percentage | 20.77 | 26.12 | 28.99 |
| Slagging Index | 1.73 | 1.53 | 2.04 |
| Critical Viscosity Temp (°F) ($T_{cv}$) | 2426 | 2440 | 2408 |
| $T_{250}$ (°F) | 2499 | 2443 | 2310 |
| Viscosity at $T_{cv}$ (poises) | 209 | 135 | 65 |
| Fouling: | | | |
| Fouling Index B/A ($Na_2O$) | 0.23 | 0.54 | 0.92 |
| $Na_2O$ Ash | 0.68 | 1.46 | 1.83 |
| Bulk Resistivity: | $9 \times 10^{11}$ Ohm-cm | $4 \times 10^{11}$ Ohm-cm | $2 \times 10^{11}$ Ohm-cm |
| Eq Moisture: | 25.71 | 23.82 | 24.89 |
| Hargrove: | 70 to 77* | 74* | |

* Obtained from Clean Coal Test Run



356

TABLE 4.2-8 SAMPLE SUMMARY

| Sample | Type | Sample Location No. | No. Samples | No. Increments | Increment Weight lbs. |
|---|---|---|---|---|---|
| Raw Feed | Continuous/Stop Belt | 1 | 36 | 12 | 190 |
| Clean Coal Product | Continuous/Belt Discharge | 2 | 15 | 15 | 146 |
| Coarse Refuse | Continuous/Screen Overs | 3 | 36 | 36 | 37 |
| Fine Refuse | Continuous/Pipe Sample | 4 | 30 | 10 | 15 gal. |
| Coarse Centrifuge Product (C.C.) | GRAB | 5 | Undt. | - | - |
| Fine Centrifuge Product (C.C.) | GRAB | 6 | Undt. | | |

## TABLE 4.2-9 - DISTRIBUTION CURVE DETERMINATION

Input Data From Washability Analysis:

| | FEED | C.C. | REFUSE |
|---|---|---|---|
| Ash, % | 33.53 | 19.77 | 79.35 |
| Float 1.60 S.G. % | 72.70 | 92.80 | 0.1 |
| Float 1.80 S.G., % | 78.90 | 98.70 | 0.4 |

The yields of clean coal and refuse are calculated by the ash and specific gravity balances as follows:

| | | | |
|---|---|---|---|
| Ash Balance: | 79.35-33.53/79.35-19.77 x 100 | = | 76.9% |
| Specific Gravity Balance: | | | |
| Float 1.60 S.G.: | 72.7-.1/92.8-.1 x 100 | = | 78.3% |
| Float 1.80 S.G.: | 78.9-.4/98.7-.4 x 100 | = | 79.9% |
| Average of Ash and S.G. Balances: | | = | 78.4% C.C |
| The Refuse Yield | 100-78.4 | = | 21.6% |

Based on the yields, the reconstituted feed and distribution numbers are calculated. These are shown below:

| Specific Gravity | Wt.% Clean Coal | | Wt.% Refuse | | Wt% Reconstituted Feed | Distribution No. Wt.% To Refuse |
|---|---|---|---|---|---|---|
| Float 1.30 | 64.5 | 50.57 | 0 | 0 | 50.70 | 0 |
| 1.30 - 1.45 | 19.8 | 15.52 | 0 | 0 | 15.52 | 0 |
| 1.45 - 1.60 | 8.5 | 6.66 | 0.1 | 0.02 | 6.68 | 0.3 |
| 1.60 - 1.70 | 3.6 | 2.82 | 0.1 | 0.02 | 2.84 | 1.0 |
| 1.70 - 1.80 | 2.3 | 1.80 | 0.2 | 0.04 | 1.84 | 2.0 |
| 1.80 - 1.90 | 0.8 | 0.63 | 2.0 | 0.43 | 1.06 | 40.6 |
| 1.90 - 2.10 | 0.2 | 0.16 | 35.5 | 7.67 | 7.83 | 98.0 |
| Sink 2.10 | 0.3 | 0.24 | 62.1 | 13.42 | 13.66 | 98.2 |
| | 100.0 | 78.40 | 100.0 | 21.60 | 100.00 | |

From the distribution curve plotted in Figure 14, the gravity of spearation apprached 1.85 or more. The cleaning efficiency (probable error) equaled 0.065.

TABLE 4.2-10 SUMMARY OF WHOLE COAL ANALYSES (PLANT RUN)

| | Raw | Clean |
|---|---|---|
| **Proximate Analysis** | | |
| Moist (AR/DRY/MAF) | 28.79/ - / - | 32.31/ - / - |
| Ash | 23.18/32.55/ - | 13.07/19.31/ - |
| Volatile Matter | 27.82/39.07/57.92 | 28.15/41.58/51.53 |
| Fixed Carbon | 20.21/28.38/42.08 | 26.47/39.11/48.47 |
| Sulfur | 3.49/ 4.90/ 7.26 | 2.71/ 4.00/ 4.96 |
| H.H.V. | 5995 / 8419/12481 | 7154 /10569/13098 |
| Alk. as $Na_2O$ | 0.22/ 0.31/ 0.46 | 0.25/ 0.37/ 0.46 |
| **Sulfur Forms** | | |
| Pyritic (AR/DRY) | 2.09/ 2.93 | 1.45/ 2.00 |
| Sulfate | 0.18/ 0.25 | 0.15/ 0.20 |
| Organic | 1.22/ 1.72 | 1.31/ 1.80 |
| **Water Soluble Alkalis** | | |
| $Na_2O$ (AR/DRY) | 0.167/0.234 | 0.165/0.227 |
| $K_2O$ | 0.012/0.017 | 0.008/0.011 |
| **Fusion Temperatures (°F)** | | |
| Initial Deform (RED/OX) | 2470/2610 | 2150/2390 |
| Softening | 2530/2670 | 2200/2460 |
| Hemi | 2570/2700+ | 2250/2510 |
| Fluid | 2610/2700+ | 2310/2550 |
| **Ultimate Analysis (°F)** | | |
| Moist (AR/DRY) | 28.79/ - | 32.31/ - |
| Carbon | 33.43/46.94 | 40.20/59.39 |
| Hydrogen | 2.56/ 3.59 | 2.90/ 4.28 |
| Nitrogen | 0.52/ 0.73 | 0.59/ 0.87 |
| Chlorine | 0.39/ 0.55 | 0.22/ 0.32 |
| Sulfur | 3.49/ 4.90 | 2.71/ 4.00 |
| Ash | 23.18/32.55 | 13.07/19.31 |
| Oxygen (diff) | 7.64/10.74 | 8.00/11.83 |
| **Mineral Analysis of Ash** | | |
| $SiO_2$ | 41.63 | 36.28 |
| $Al_2O_3$ | 28.46 | 26.25 |
| $TiO_2$ | 2.09 | 1.86 |
| $Fe_2O_3$ | 16.79 | 18.47 |
| CaO | 3.03 | 5.14 |
| MgO | 1.76 | 2.77 |
| $K_2O$ | 0.53 | 0.51 |
| $Na_2O$ | 0.59 | 1.56 |
| $SO_3$ | 4.23 | 6.90 |
| $P_2O_5$ | 0.09 | 0.10 |
| SrO | 0.19 | 0.09 |
| BaO | 0.07 | 0.04 |
| $Mn_3O_4$ | 0.03 | 0.03 |
| Undetermined | 0.51 | 0.00 |
| **Miscellaneous** | | |
| Hargrove Grind | 77* | 74** |
| Eq. Moisture | 25.69 | 27.42 |

*At 12.82% moist

**At 17.80% moist

TABLE 4.2-11 RAW VS CLEAN INDICIES (PLANT RUN)

| | Raw | Clean |
|---|---|---|
| **Slagging:** | | |
| Slagging Reducing (°F) | | |
| Initial | 2470 | 2150 |
| Soft | 2530 | 2220 |
| Hemi | 2570 | 2250 |
| Fluid | 2610 | 2310 |
| Base Acid Ratio | 0.31 | 0.44 |
| Silica-Alumina Ratio | 1.46 | 1.38 |
| Silica Value | 65.86 | 57.90 |
| Iron Ratio | 3.51 | 2.34 |
| Dolomite Percentage | 21.10 | 27.80 |
| Slagging Index | 1.52 | 1.76 |
| Critical Viscosity Temp ($T_{cv}$) | 2487 | 2488 |
| $T_{250}$ (°F) | 2521 | 2363 |
| Viscosity at $T_{cv}$ (poises) | 183 | 60 |
| **Fouling:** | | |
| Fouling Index | | |
| B/A ($Na_2O$) | 0.18 | 0.69 |
| $Na_2O$ Ash | 0.59 | 1.56 |
| **Hargrove:** | 77 | 74 |

TABLE 4.2-12 Mass Balance Measurements and Determination

A. Tonnage Requirements

Listed below is the product balance for the test run. All values are reported on a dry basis as adjusted by the total moisture determined in the washability study. Determination of gross weights with the exception of the fine refuse was accomplished through static scale readings of the tandems.

| Product | Tons | Wt% |
|---|---|---|
| Raw Feed: | 33.80 | 100.0 |
| Clean Coal: | 24.24 | 71.7 |
| Coarse Refuse(+ 28M) | 4.25 | 12.6 |
| Fine Refuse(28M x 0) | 5.31* | 15.7 |

* Determined by difference

B. BTU Recovery

Input Data:

| Product | Source | BTU/LB. |
|---|---|---|
| Feed | Head | 8419 |
| Feed | Screen Head | 8113 |
| Feed | Total Wash. | 8118 |
| Clean Coal | Head | 10569 |
| Clean Coal | Screen Head | 10511 |
| Clean Coal | Total Wash. | 10375 |

The BTU recovery is determined by using the weights reported in section 2 and the quality values outlined above.

Recovery = 24.24 (10569) / 33.80 (8419) x 100 = 90.03%

Recovery = 24.24 (10511) / 33.80 (8113) x 100 = 92.91%

Recovery = 24.24 (10375) / 33.80 (8118) x 100 = 91.65%

The average of three values is..... = 91.50%

TABLE 4.4-1

TEST FUEL ANALYSES

| | |
|---|---|
| PROXIMATE, WT % (DRY) | |
| VOLATILE MATTER | 35.0 |
| FIXED CARBON | 28.6 |
| ASH | 36.4 |
| TOTAL | 100.0 |
| HHV, BTU/LB (DRY) | 7,340 |
| ULTIMATE, WT% (DRY) | |
| HYDROGEN | 3.6 |
| CARBON | 40.6 |
| SULFUR | 6.1 |
| NITROGEN | 0.7 |
| OXYGEN | 12.6 |
| ASH | 36.4 |
| TOTAL | 100.0 |
| ASH FUSIBILITY, °F | |
| I.T. | 1980 |
| S.T. | 2430 |
| H.T. | 2470 |
| F.T. | 2520 |
| ASH COMPOSITION, WT% | |
| $SiO_2$ | 43.6 |
| $Al_2O_3$ | 27.2 |
| $Fe_2O_3$ | 17.2 |
| CaO | 3.3 |
| MgO | 1.3 |
| $Na_2O$ | 0.7 |
| $K_2O$ | 0.7 |
| $TiO_2$ | 1.9 |
| $SO_3$ | 3.9 |
| TOTAL | 99.8 |



192

TABLE 4.4-2

PRELIMINARY FPTF RESULTS

PULVERIZATION CHARACTERISTICS

- HARDGROVE GRINDABILITY INDEX 71.0
- EASY TO PULVERIZE
- LOW POWER REQUIREMENT 7.6 KW-HR/TON
- MILL REJECT RATE 2.1% BY WEIGHT OF FEED
- HIGH ABRASION INDEX 50 LBS/1000 TONS P.C.

TABLE 4.4-3

LAKHRA BASELINE COAL EVALUATION TEST MATRIX

| TEST NO. | FUEL FEED RATE: LBS/HR | EXCESS AIR (%) | TARGET FLAME TEMPERATURE (°F) | ACTUAL FLAME TEMPERATURE (°F) |
|---|---|---|---|---|
| 1 | 380 | 25 | 2850 | 2840 |
| 2 | 380 | 25 | 2750 | 2730 |
| 3 | 380 | 25 | 2600 | 2650 |
| 4 | 380 | 25 | 2600 | 2610 |
| 5 | 300 | 25 | 2550 | 2550 |
| 6 | 300 | 25 | 2600 | 2580 |
| 7 | 275 | 25 | 2600 | 2600 |
| 8 | 250 | 25 | 2600 | 2610 |

TABLE 4.4-4

PRELIMINARY FPTF RESULTS

- RELATIVE COMBUSTION CHARACTERISTICS
  - GOOD INTENSE, STABLE FLAME
  - NO APPARENT TURNDOWN/FLAME STABILITY PROBLEMS
  - GOOD COMBUSTION EFFICIENCY IN FPTF GREATER THAN 99.5%

TABLE 4.4-5

PRELIMINARY FPTF RESULTS

FURNACE SLAGGING CHARACTERISTICS

- SEVERE SLAGGING POTENTIAL

- FLAME TEMPERATURE CRITICAL FACTOR FOR DEPOSIT CLEANABILITY/HEAT FLUX RECOVERY

| FLAME TEMP. (°F) | PHYSICAL STATE | THICKNESS (IN) | CLEANABILITY |
|---|---|---|---|
| 2840 | MOLTEN | 1 | POOR |
| 2730 | MOLTEN | 1 | POOR |
| 2650 | MOLTEN | 3/4 | POOR |
| 2600 | H. SINTERED/ | 1/2 | GOOD |
| 2550 | OUTER MOLTEN | | |

- RAPID BOTTOM ASH ACCUMULATION RATE

- WATERWALL DEPOSIT HARD BUT POROUS

TABLE 4.4-6

LAKHRA BASELINE COAL FURNACE SLAGGING RESULTS

| TEST NO. | FUEL FEED RATE LBS/HR | FLAME TEMPERATURE | | INITIAL HEAT FLUX | | FINAL HEAT FLUX | | HEAT FLUX AFTER SOOTBLOWING | | % RECOVERY | |
|---|---|---|---|---|---|---|---|---|---|---|---|
| | | B | C | B | C | B | C | B | C | B | C |
| 1 | 380 | 2790 | 2820 | 87,094 | 82,045 | 22,004 | 19,990 | 11,892 | 10,922 | 0 | 0 |
| 2 | 380 | 2740 | 2710 | 77,592 | 86,995 | 13,693 | 16,556 | 11,578 | 17,409 | 0 | 1 |
| 3 | 380 | 2580 | 2650 | 59,205 | 69,979 | 2,591 | 11,998 | 9,896 | 14,056 | 17 | 3 |
| 4 | 380 | 2560 | 2610 | 65,647 | 64,829 | 7,282 | 18,704 | 64,809 | 57,307 | 99 | 88 |
| 5 | 300 | 2550 | 2490 | 53,559 | 55,263 | 13,026 | 20,875 | 53,994 | 52,438 | 100 | 95 |
| 6 | 300 | 2560 | 2580 | 59,326 | 65,490 | 12,761 | 26,670 | 69,136 | 67,695 | 100 | 100 |
| 7 | 275 | 2520 | 2600 | 60,377 | 56,002 | 11,793 | 20,211 | 63,440 | 70,529 | 100 | 100 |
| 8 | 250 | 2500 | 2610 | 56,974 | 57,278 | 24,067 | 27,878 | 53,383 | 67,890 | 94 | 100 |

TABLE 4.4-7

## PRELIMINARY FPTF RESULTS

- CONVECTIVE PASS FOULING CHARACTERISTICS
  - OVERALL MODERATE FOULING POTENTIAL
  - RELATIVE HIGH DEPOSITION RATE

| GAS TEMP. (°F) | ASH LOADING (LB/HR) | PHYSICAL STATE | SOOT BLOWING FREQUENCY (HR) | GAS VELOCITY (FT/SEC) |
|---|---|---|---|---|
| 2340 | 132.6 | L. SINTERED | 3-4 | 62.7 |
| 2140 | 132.6 | L. SINTERED | 5-6 | 58.1 |
| 2050 | 104.7 | L. SINTERED | 6-8 | 41.4 |

DEPOSIT BONDING STRENGTH LESS THAN 5
VERY GOOD CLEANABILITY

HIGH DEPOSITION RATE IN TRANSITION SECTION
DUE TO CARRY OVER FROM LOWER FURNACE

TABLE 4.4-8

## PRELIMINARY FPTF RESULTS

### IN-SITU FLY ASH RESISTIVITY MEASUREMENT

| | |
|---|---|
| FLUE GAS TEMP. | 255°F |
| $SO_3$ CONCENTRATION | 15 PPM |
| MOISTURE | 8% |
| RESISTIVITY | $1.76 \times 10^{11}$ ohm-Cm |

### PREDICTED RESISTIVITY VALUES

| FLUE GAS TEMP. (°F) | MOISTURE LEVEL (%) | RESISTIVITY (ohm-Cm) 0 $SO_3$ | 10 $SO_3$ |
|---|---|---|---|
| 441 | 8.2 | $2.0 \times 10^{11}$ | $2.7 \times 10^{10}$ |
| 359 | 8.2 | $4.1 \times 10^{11}$ | $2.2 \times 10^{9}$ |
| 291 | 8.2 | $2.9 \times 10^{11}$ | $1.7 \times 10^{9}$ |

TABLE 4.4-9

PRELIMINARY FPTF RESULTS

| | ASH LOADING (LBS/HR) | GAS VELOCITY (FT/SEC) | EROSION RATE (MICRONS/HR) | EROSION RATE (MICRONS/LB ASH) | NORMALIZED[1] EROSION (MICRONS/HR) |
|---|---|---|---|---|---|
| | 96 | 118 | 0.13 | 0.0102 | 0.45 |
| LAKHRA | 105 | 132 | 0.18 | 0.0131 | 0.46 |
| | 133 | 173 | 0.46 | 0.0263 | 0.46 |
| MILL CREEK | 44 | 174 | 0.23 | 0.039 | 0.23 |

(1) NORMALIZED TO 173 FT/SEC GAS VELOCITY AND 133 LB/HR ASH LOADING

TABLE 4.4-10

Lahkra Coal Corrosion Probe Results

| Material | Temp. | Wt. Loss mg/cm² | Penetration (Est.) mm/year |
|---|---|---|---|
| | | Tubes in Bank | |
| 310 | 1100F (590°C) | 0.9 | 0.02 |
| | 1100F (590°C) | 1.2 | 0.03 |
| 347 | 1100F (590°C) | 1.4 | 0.03 |
| | 1000F (535°C) | 1.3 | 0.03 |
| | 1000F (535°C) | 0.8 | 0.02 |
| | 1000F (535°C) | 1.2 | 0.03 |
| T-91 | 1100F (590°C) | 21.2 | 0.28 |
| T-22 | 1100F (590°C) | 67.4 | 0.88 |
| | 1100F (590°C) | 53.9 | 0.69 |
| | 1100F (590°C) | 47.9 | 0.62 |
| T-11 | 1000F (535°C) | 67.3 (2nd bank) | 0.87 |
| | 1000F (535°C) | 22.5 (4th bank) | 0.29 |
| | 1000F (535°C) | 20.2 (4th bank) | 0.26 |
| 210 | 1000F (535°C) | 143.8 (2nd bank) | 1.90 |
| | 1000F (535°C) | 31.5 (4th bank) | 0.41 |
| | 1000F (535°C) | 32.4 (4th bank) | 0.42 |

TABLE 4.5-1
TEST FUEL ANALYSIS FOR

| | LAKHRA WASHED COAL | LAKHRA BASELINE COAL |
|---|---|---|
| PROXIMATE, WT % (DRY) | | |
| VOLATILE MATTER | 41.6 | 35.0 |
| FIXED CARBON | 39.3 | 28.6 |
| ASH | 19.1 | 36.4 |
| TOTAL | 100.1 | 100.0 |
| HHV. BTU/LB (DRY) | 10330 | 7,340 |
| ULTIMATE, WT% (DRY) | | |
| HYDROGEN | 4.7 | 3.6 |
| CARBON | 57.2 | 40.6 |
| SULFUR | 4.7 | 6.1 |
| NITROGEN | 1.2 | 0.7 |
| OXYGEN | 13.1 | 12.6 |
| ASH | 19.1 | 36.4 |
| TOTAL | 100.0 | 100.0 |
| ASH FUSIBILITY, °F | | |
| IDT | 2040 | 1980 |
| ST | 2350 | 2430 |
| HT | 2410 | 2470 |
| FT | 2440 | 2520 |
| ASH COMPOSITION, WT% | | |
| $SiO_2$ | 39.0 | 43.6 |
| $Al_2O_3$ | 22.9 | 27.2 |
| $Fe_2O_3$ | 19.3 | 17.2 |
| CaO | 5.3 | 3.3 |
| MgO | 2.2 | 1.3 |
| $Na_2O$ | 1.2 | 0.7 |
| $K_2O$ | 0.6 | 0.7 |
| $TiO_2$ | 1.5 | 1.9 |
| $SO_3$ | 6.4 | 3.9 |
| TOTAL | 98.4 | 99.8 |
| BASE/ACID RATIO | 0.45 | |
| $Fe_2O_3/CaO$ | 3.64 | |
| $SiO_2/Al_2O_3$ | 1.70 | |

TABLE 4.5-2

PRELIMINARY FPTF PULVERIZATION RESULTS

O PULVERIZATION CHARACTERISTICS

- LOW POWER REQUIREMENT 7.1 KW-HR/TON
- MILL REJECT RATE 0.8% BY WEIGHT OF FEED
- EASY TO PULVERIZE
- HARDGROVE GRINDABILITY INDEX 67
- ABRASION INDEX 12.5 LBS/1000 TONS P.C.

TABLE 4.5-3

LAKHRA WASHED TEST MATRIX

| TEST NO. | FUEL FEED RATE: LBS/HR | FIRING RATE $10^6$ bTU/HR | EXCESS AIR (%) | AVERAGE PEAK FLAME (°F) |
|---|---|---|---|---|
| 1 | 319.4 | 2.92 | 25 | 2630 |
| 2 | 319.4 | 2.92 | 25 | 2710 |
| 3 | 319.4 | 2.92 | 25 | 2670 |
| 4 | 319.4 | 2.92 | 25 | 2670 |
| 5 | 319.4 | 2.92 | 25 | 2650 |
| 6 | 319.4 | 2.92 | 25 | 2610 |

TABLE 4.5-4

PRELIMINARY FPTF RESULTS

RELATIVE COMBUSTION CHARACTERISTICS

- FLAME STABLE, GOOD INTENSITY
- NO APPARENT TURNDOWN/FLAME STABILITY PROBLEMS
- COMBUSTION EFFICIENCY IN FPTF GREATER THAN 99.7%

TABLE 4.5-5

PRELIMINARY FPTF RESULTS

O FURNACE SLAGGING CHARACTERISTICS

- SEVERE SLAGGING POTENTIAL
- FLAME TEMPERATURE CRITICAL FACTOR FOR DEPOSIT CLEANABILITY/HEAT FLUX RECOVERY

| FLAME TEMP °F | PHYSICAL STATE | THICKNESS (IN) | CLEANABILITY |
|---|---|---|---|
| 2710 | MOLTEN | 1/2 | POOR |
| 2670 | MOLTEN | 1/8-1/4 | POOR |
| 2650 | HIGHLY SINTERED MOLTEN OVERLAY | 1/2-3/4 | MARGINAL |
| 2630 | HIGHLY SINTERED MOLTEN OVERLAY | 1/4-1/2 | GOOD |
| 2610 | HIGHLY SINTERED MOLTEN OVERLAY | 1/8-1/4 | GOOD |
| 2570 | HIGHLY SINTERED | 1/2 | GOOD |
| 2550 | HIGHLY SINTERED | 1/8-1/4 | GOOD |
| 2526 | HIGHLY SINTERED | 1/4-1/2 | GOOD |

-HIGH BOTTOM ASH ACCUMULATION RATE

TABLE 4.5-6

LAKHRA WASHED COAL CHARACTERIZATION
FPTF SLAGGING RESULTS

| TEST NO. | Q $10^6$ BTU/HR | FLAME TEMPERATURE (°F) | | CLEAN PANEL HEAT FLUX $10^3$(BTY/HR FT$^2$) | | HEAT FLUX BEFORE SOOTBLOWING ($10^3$BTU/HR-FT$^2$) | | HEAT FLUX AFTER SOOTBLOEING ($10^3$BTU/HR-FT$^2$) | | % RECOVERY | |
|---|---|---|---|---|---|---|---|---|---|---|---|
| | | B | C | B | C | B | C | B | C | B | C |
| 1 | 2.92 | 2550 | 2630 | 59.3 | 67.2 | 12.7 | 17.5 | 69.8 | 60.7 | 1.00 | 0.90 |
| 2 | 2.92 | 2630 | 2710 | 68.3 | 65.6 | 15.5 | 19.7 | 60.9 | 36.9 | 0.89 | 0.56 |
| 3 | 2.92 | 2610 | 2670 | 56.9 | 69.5 | 14.5 | 23.7 | 68.8 | 71.6 | 1.00 | 1.00 |
| 4 | 2.92 | 2560 | 2670 | 58.1 | 69.5 | 19.8 | 20.6 | 55.7 | 18.1 | 0.96 | 0.26 |
| 5 | 2.92 | 2570 | 2650 | 60.4 | 69.8 | 10.0 | 11.1 | 63.2 | 41.5 | 1.00 | 0.59 |
| 6 | 2.92 | 2520 | 2610 | 61.8 | 47.1 | 11.7 | 18.8 | - | - | - | - |

TABLE 4.5-7

PRELIMINARY FPTF RESULTS

O CONVECTIVE PASS FOULING CHARACTERISTICS

- OVERALL LOW TO MODERATE FOULING POTENTIAL
- MODERATE TO HIGH ASH DEPOSITION RATE

| GAS TEMP °F | ASH LOADING LB/HR | PHYSICAL STATE | SOOTBLOWING FREQUENCY HR | GAS VELOCITY FT/SEC | BSM |
|---|---|---|---|---|---|
| 2260 | 56.1 | L. SINTERED | 6 | 58.5 | 2.0 |
| 2190 | 56.1 | L. SINTERED | 6 | 57.7 | 1.9 |
| 2110 | 56.1 | L. SINTERED | 6 | 55.5 | 1.4 |

- DEPOSIT BONDING STRENGTH LESS THAN 5
  GOOD CLEANABILITY
- DEPOSITION RATE IN TRANSITION SECTION AND DUCT I
  HIGH DUE TO CARRY OVER FROM LOWER FURNACE



Foo

TABLE 4.5-8

PRELIMINARY FPTF RESULTS

O IN-SITU FLY ASH RESISTIVITY MEASUREMENT

| | |
|---|---|
| FLUE GAS TEMPERATURE | 308°F |
| $SO_3$ CONCENTRATION | 3 PPM |
| MOISTURE | 11 % |
| RESISTIVITY | 7.6 X 10" |

TABLE 4.6-1
LAKHRA COAL PERFORMANCE CHARACTERISTICS

| | Baseline | Washed | BT-11-1 | BT-11-2 |
|---|---|---|---|---|
| PULVERIZATION | | | | |
| Grinding Energy | | | | |
| Kw-hr/Ton | 7.6 | 7.1 | 7.4 | 6.9 |
| Kw-hr/MMBtu | 0.52 | 0.34 | 0.48 | 0.50 |
| Relative Mill Wear Abrasion Index | 50 | 12.5 | N/A* | N/A* |
| Hardgrove Grindability | 71 | 67 | 78 | 106 |
| ASH SLAGGING | | | | |
| Critical Flame Temperature, °F | 2,600 | 2,600 | 2,570 | 2,570 |
| (Cleanable by Sootblower) °C | 1,425 | 1,425 | 1,410 | 1,410 |
| Waterwall Heat Flux Reduction After 12 Hr. | 63.9 | 60.1 | 66.5 | 64.2 |
| ASH FOULING | | | | |
| Deposit Bonding Strength (15 Max. for cleanable deposit) | 2.0 | 1.4 | 2.0 | 2.3 |
| Sootblowing Frequency, hr | 5-6 | 6 | 4-5 | 3-4 |
| COMBUSTION | | | | |
| Flame Stability | Good | Good | Good | Good |
| Carbon Conversion, % | 99.95 | 99.97 | 99.96 | 99.96 |
| FLY ASH RESISTIVITY | | | | |
| Ohm-cm | $1.76 \times 10^{11}$ | $7.6 \times 10^{11}$ | $5.48 \times 10^{10}$ | - |
| $SO_3$ in Flue Gas, PPM | 15 | 3 | 17-20 | - |
| EROSION | | | | |
| Max. penetration, μ/hr | 0.46 | N/A* | N/A* | N/A* |

*N/A - Data analysis in progress.

TABLE 4.6-2
LAKHRA COAL SAMPLE ANALYSES

| | PMDC Baseline | Washed | BT-11 Seam 1 | BT-11 Seam 2 |
|---|---|---|---|---|
| PROXIMATE, WT % (DRY) | | | | |
| Volatile Matter | 35.0 | 41.6 | 38.7 | 33.6 |
| Fixed Carbon | 28.6 | 39.3 | 28.9 | 27.7 |
| Ash | 36.4 | 19.1 | 32.4 | 38.7 |
| TOTAL | 100.0 | 100.0 | 100.0 | 100.0 |
| HHV, Btu/lb (Dry) | 7,340.0 | 10,330.0 | 7,630.0 | 6,925.0 |
| ULTIMATE, WT% (DRY) | | | | |
| Hydrogen | 3.6 | 4.7 | 3.7 | 3.0 |
| Carbon | 40.6 | 57.2 | 41.4 | 38.1 |
| Sulfur | 6.1 | 4.7 | 8.1 | 9.1 |
| Nitrogen | 0.7 | 1.2 | 0.8 | 0.8 |
| Oxygen | 12.6 | 13.1 | 13.6 | 10.3 |
| Ash | 36.4 | 19.1 | 32.4 | 38.7 |
| Total | 100.0 | 100.0 | 100.0 | 100.0 |
| ASH FUSIBILITY, $^{o}C$ ($^{o}F$) | | | | |
| I.T. | 1,080 (1,980) | 1,110 (2,040) | 1,150 (2,100) | 1,160 (2,120) |
| S.T. | 1,330 (2,430) | 1,290 (2,350) | 1,270 (2,310) | 1,230 (2,250) |
| H.T. | 1,350 (2,470) | 1,320 (2,410) | 1,300 (2,370) | 1,280 (2,330) |
| F.T. | 1,380 (2,520) | 1,340 (2,440) | 1,330 (2,430) | 1,300 (2,380) |
| ASH COMPOSITION, WT % | | | | |
| $SiO_2$ | 43.6 | 39.0 | 40.9 | 42.4 |
| $Al_2O_3$ | 27.2 | 22.9 | 24.6 | 20.4 |
| $Fe_2O_3$ | 17.2 | 19.3 | 22.6 | 27.0 |
| CaO | 3.3 | 5.3 | 2.5 | 2.0 |
| MgO | 1.3 | 2.2 | 1.3 | 1.2 |
| $Na_2O$ | 0.7 | 1.2 | 0.8 | 0.7 |
| $K_2O$ | 0.7 | 0.6 | 0.2 | 0.5 |
| $TiO_2$ | 1.9 | 1.5 | 1.6 | 1.8 |
| $SO_3$ | 3.9 | 6.4 | 3.2 | 2.7 |
| TOTAL | 99.8 | 98.4 | 97.7 | 98.7 |

TABLE 4.7-1

SIMILAR ASH COAL COMPARISON

| Analysis / Source | 1 PMDC 2 GCII Channel | 2 PMDC 2 Boyd Channel | 3 PMDC 2 CE/KDL 1st 50T | 4 PMDC 2 R&S/CTE 3 Tons | 5 PMDC 2 R&S/CTE 2nd 50T | 6 PMDC 2 CE/KDL From DGE | 1A ALCUDIA II-Perf CE-Spain | 1B ALCUDIA II-GESA CE-Spain | 2A TERUEL FWEC Spain | 2B TERUEL SANCA Spain | 2C TERUEL OPORTUNA (3)Spain | 2D TERUEL OPORTUNA (6)Spain | 3A BRAZOS B & W San Miguel | 7 BT-11 Seam 1 CE/KDL | 8 W-A1 Seam 1 JTBoyd | 9 W-B1 Seam 1 JTBoyd | 10 W-C1 Seam 1 JTBoyd | 11 BT-11 Seam 2 CE/KDL | 12 WA-2 Seam 2 JTBoyd | 13 WB-2 Seam 2 JTBoyd | 14 WC-2 Seam 2 JTBoyd |
|---|---|---|---|---|---|---|---|---|---|---|---|---|---|---|---|---|---|---|---|---|---|
| **As Received** | | | | | | | | | | | | | | | | | | | | | |
| $H_2O$ | 30.90 | 32.64 | 32.00 | 22.23 | 28.79 | 33.20 | 14.00 | 9.85 | 23.80 | - | - | - | 30.00 | 32.00 | 32.00 | 32.00 | 32.00 | 32.00 | 32.00 | 32.00 | 32.00 |
| Ash | 14.90 | 20.59 | 24.80 | 24.26 | 23.18 | 7.60 | 32.25 | 40.18 | 19.70 | - | - | - | 28.40 | 22.03 | 20.01 | 19.88 | 27.88 | 26.32 | 18.88 | 20.75 | 28.47 |
| VM | 26.80 | 24.38 | 23.80 | 33.23 | 27.82 | 30.70 | 27.95 | 20.73 | 27.00 | - | - | - | 23.20 | 26.32 | 26.91 | 26.54 | 24.02 | 22.85 | 26.62 | 26.45 | 22.23 |
| FC | 27.50 | 21.89 | 19.40 | 20.28 | 20.21 | 28.50 | 25.85 | 29.24 | 29.50 | - | - | - | 18.40 | 19.65 | 21.08 | 21.58 | 16.10 | 18.83 | 22.49 | 20.80 | 17.30 |
| Sul | 3.80 | 4.25 | 4.10 | 3.96 | 3.49 | 2.50 | 6.02 | 7.09 | 5.30 | - | - | - | 1.67 | 5.51 | 6.02 | 6.70 | 5.20 | 6.19 | 5.62 | 5.69 | 5.75 |
| HHV | 6,980 | 5,961 | 4,991 | 6,616 | 5,995 | 7,645 | 5,263 | 6,327 | 7,047 | - | - | - | 5,000 | 5,188 | 5,639 | 5,474 | 4,483 | 4,709 | 5,803 | 5,466 | 4,121 |
| HGI | 68.5 | 88.5 | 71 | 70 | 77 | 75 | 70 | 87.8 | 60 | - | - | - | - | 78 | - | - | - | 106 | - | - | - |
| $H_2O$ | 30.90 | 32.64 | 32.00 | 22.20 | 28.80 | 33.20 | 14.00 | 9.85 | 23.80 | - | - | - | 30.00 | 32.00 | 32.00 | 32.00 | 32.00 | 32.00 | 32.00 | 32.00 | 32.00 |
| Ash | 14.90 | 20.59 | 24.80 | 24.30 | 23.20 | 7.60 | 32.30 | 40.18 | 19.80 | - | - | - | 28.40 | 22.03 | 20.01 | 19.94 | 27.88 | 26.32 | 18.88 | 20.75 | 28.47 |
| $H_2$ | 3.10 | 2.20 | 2.40 | 2.90 | 2.60 | 3.40 | 2.60 | - | 2.70 | - | - | - | - | 2.52 | 2.39 | 2.26 | 1.94 | 2.04 | 2.37 | 2.28 | 1.88 |
| C | 38.80 | 35.60 | 27.60 | 37.40 | 33.40 | 43.80 | 32.90 | - | 38.90 | - | - | - | - | 28.15 | 32.10 | 31.40 | 25.94 | 25.91 | 33.14 | 31.76 | 24.21 |
| $N_2$ | .60 | .70 | .50 | .60 | .50 | .90 | .30 | - | .10 | - | - | - | - | .54 | .59 | .71 | .45 | .54 | .54 | .73 | .51 |
| Sul | 3.80 | 4.25 | 4.10 | 4.00 | 3.50 | 2.50 | 6.01 | 7.09 | 5.30 | - | - | - | 1.67 | 5.51 | 6.02 | 6.70 | 5.20 | 6.19 | 5.62 | 5.69 | 5.75 |
| $O_2$ | 7.90 | 4.00 | 8.60 | 6.50 | 7.60 | 8.60 | 12.00 | - | 9.50 | - | - | - | - | 9.25 | 6.89 | 7.05 | 6.59 | 7.00 | 7.45 | 6.79 | 7.18 |
| MAF HHV | 17,878 | 12,745 | 11,553 | 11,366 | 12,490 | 12,914 | 9,792 | 12,662 | 12,473 | - | - | - | 12,019 | 11,286 | 11,750 | 11,390 | 11,174 | 11,298 | 11,814 | 11,568 | 10,425 |
| **Mineral** | | | | | | | | | | | | | | | | | | | | | |
| $SiO_2$ | 33.10 | 37.63 | 43.60 | 41.46 | 41.63 | 1.10 | 13.51 | 50.10 | 30.83 | 52.09 | 48.03 | 51.85 | 62.90 | 40.90 | 38.01 | 32.62 | 47.68 | 42.40 | 37.31 | 33.68 | 45.06 |
| $Al_2O_3$ | 29.30 | 26.38 | 27.20 | 28.00 | 28.46 | 14.70 | 11.25 | 29.40 | 13.50 | 26.45 | 23.15 | 22.00 | 17.50 | 24.60 | 20.84 | 20.40 | 19.62 | 20.40 | 20.06 | 19.65 | 20.98 |
| $TiO_2$ | 2.66 | 2.14 | 1.90 | 2.12 | 2.09 | 1.10 | - | - | - | .67 | .76 | .67 | .80 | 1.60 | 2.07 | 2.15 | 1.88 | 1.80 | 2.21 | 2.04 | 2.16 |
| CaO | 2.71 | 3.44 | 3.30 | 3.02 | 3.03 | 9.90 | 47.32 | 3.60 | 8.24 | 2.69 | 5.66 | 5.19 | 4.80 | 2.50 | 2.89 | 2.88 | 3.05 | 2.00 | 3.52 | 2.64 | 3.88 |
| $K_2O$ | .64 | .41 | .70 | .43 | .53 | .40 | .74 | 1.50 | 1.48 | 2.05 | 1.18 | 1.36 | 1.96 | .20 | .57 | .55 | .58 | .50 | .54 | .48 | .76 |
| MgO | 2.55 | 2.11 | 1.30 | 1.98 | 1.76 | 3.80 | 1.25 | .70 | 1.40 | .48 | .69 | .36 | .70 | 1.30 | 1.70 | 1.64 | 2.54 | 1.20 | 2.10 | 1.42 | .79 |
| $Na_2O$ | 2.18 | .90 | .70 | .63 | .59 | 2.90 | .19 | - | .15 | .15 | .11 | .12 | 3.10 | .80 | .58 | .64 | .32 | .70 | .74 | .65 | .48 |
| $Fe_2O_3$ | 21.60 | 20.91 | 17.20 | 17.96 | 16.79 | 32.40 | 3.23 | 12.40 | 20.72 | 13.40 | 15.30 | 14.05 | 2.80 | 22.60 | 26.11 | 33.37 | 17.79 | 27.00 | 25.53 | 33.60 | 19.11 |
| $P_2O_5$ | 1.36 | .58 | - | .06 | .09 | - | - | - | - | .22 | .18 | .40 | - | - | .76 | .72 | .59 | - | .64 | .68 | .66 |
| $SO_3$ | 9.35 | 4.90 | 3.90 | 3.91 | 4.23 | 14.70 | 7.12 | 3.80 | - | 2.18 | 5.36 | 4.08 | - | 3.20 | 5.18 | 4.65 | 5.28 | 2.70 | 6.10 | 4.80 | 4.98 |
| SrO | - | - | - | .25 | .19 | - | - | - | - | - | - | - | - | - | - | - | - | - | - | - | - |
| BaO | - | - | - | .09 | .07 | - | - | - | - | - | - | - | - | - | - | - | - | - | - | - | - |
| $Mn_3O_4$ | - | - | - | .02 | .03 | - | - | - | - | - | - | - | - | - | - | - | - | - | - | - | - |
| Undet | 3.55 | .60 | .20 | 0.00 | .51 | (1.00) | 15.48 | (1.50) | 23.68 | (.38) | (.42) | (.08) | 5.44 | 2.30 | 1.29 | .38 | .66 | 1.30 | 1.25 | .36 | 1.14 |
| Base/Acid | .53 | .42 | .32 | .34 | .31 | 1.34 | 2.13 | .23 | .72 | .24 | .32 | .28 | .16 | .41 | .52 | .71 | .35 | .49 | .54 | .70 | .37 |
| Fouling | SEV | MED | MED | MED | LOW | SEV | LOW | LOW | LOW | LOW | LOW | LOW | HIGH | MED | MED | MED | LOW | MED | MED | MED | LOW |
| Slagging | SEV | SEV | MED | MED | MED | SEV | SEV | MED | SEV | MED | HIGH | MED | LOW* | SEV | SEV | SEV | SEV | SEV | SEV | SEV | SEV |
| $Fe_2O_3/CaO$ | 7.97 | 6.08 | 5.21 | 5.95 | 5.54 | 3.27 | .07 | 3.44 | 2.51 | 4.98 | 2.70 | 2.71 | .58 | 9.04 | 9.03 | 11.59 | 5.81 | 13.50 | 7.25 | 12.73 | 4.93 |
| $Fe_2O_3/CaO+MgO$ | 4.11 | 3.77 | 3.74 | 3.59 | 3.51 | 2.36 | .07 | 2.88 | 2.15 | 4.23 | 2.41 | 2.53 | .51 | 5.95 | 5.69 | 7.38 | 3.18 | 8.44 | 4.54 | 8.28 | 4.09 |
| $SiO_2/Al_2O_3$ | 1.63 | 1.43 | 1.60 | 1.48 | 1.46 | 1.44 | 1.20 | 1.70 | 2.28 | 1.97 | 2.07 | 2.36 | 3.59 | 1.66 | 1.82 | 1.60 | 2.43 | 2.08 | 1.86 | 1.71 | 2.15 |
| $SiO_2$ Pct | 55.20 | 58.71 | 66.67 | 64.36 | 65.86 | 31.40 | 20.69 | 75.00 | 50.38 | 75.87 | 68.93 | 72.57 | 88.34 | 60.77 | 55.32 | 46.26 | 67.09 | 58.40 | 54.50 | 47.21 | 65.46 |
| $LbSO_2$/MKBtu | 10.89 | 14.26 | 16.43 | 11.97 | 11.64 | 6.54 | 22.88 | 22.41 | 15.04 | - | - | - | 6.68 | 21.24 | 21.35 | 24.48 | 23.20 | 26.29 | 19.37 | 20.82 | 27.91 |
| LbAsh/MKBtu | 21.35 | 34.54 | 49.69 | 36.67 | 38.67 | 9.94 | 61.28 | 63.51 | 27.96 | - | - | - | 56.80 | 42.46 | 35.49 | 36.32 | 62.19 | 55.89 | 32.53 | 37.96 | 69.09 |
| **AFT/Red. Or** | | | | | | | | | | | | | | | | | | | | | |
| Initial | - | 2,085 | 1,980 | 2,290 | 2,470 | 1,990 | - | 2,372 | - | - | - | - | 2,000 | 2,100 | 2,017 | 2,019 | 2,108 | 2,120 | 2,065 | 2,016 | 2,140 |
| Softening | - | 2,115 | 2,430 | 2,440 | 2,530 | 2,040 | 2,674 | 2,700+ | - | - | - | - | - | 2,310 | 2,035 | 2,024 | 2,152 | 2,250 | 2,076 | 2,036 | 2,162 |
| Hemisph | - | 2,155 | 2,470 | 2,510 | 2,570 | 2,050 | - | - | - | - | - | - | - | 2,370 | 2,051 | 2,029 | 2,208 | 2,330 | 2,079 | 2,054 | 2,157 |
| Final | - | 2,185 | 2,520 | 2,565 | 2,610 | 2,090 | - | 2,700+ | - | - | - | - | - | 2,430 | 2,132 | 2,235 | 2,312 | 2,380 | 2,133 | 2,136 | 2,492 |

*But test burns and experience show this coal to be severe slagging.

LPS/B6281/D11

FIGURE 4.2.1 PMDC Mine No. 2 Seam Cross Section

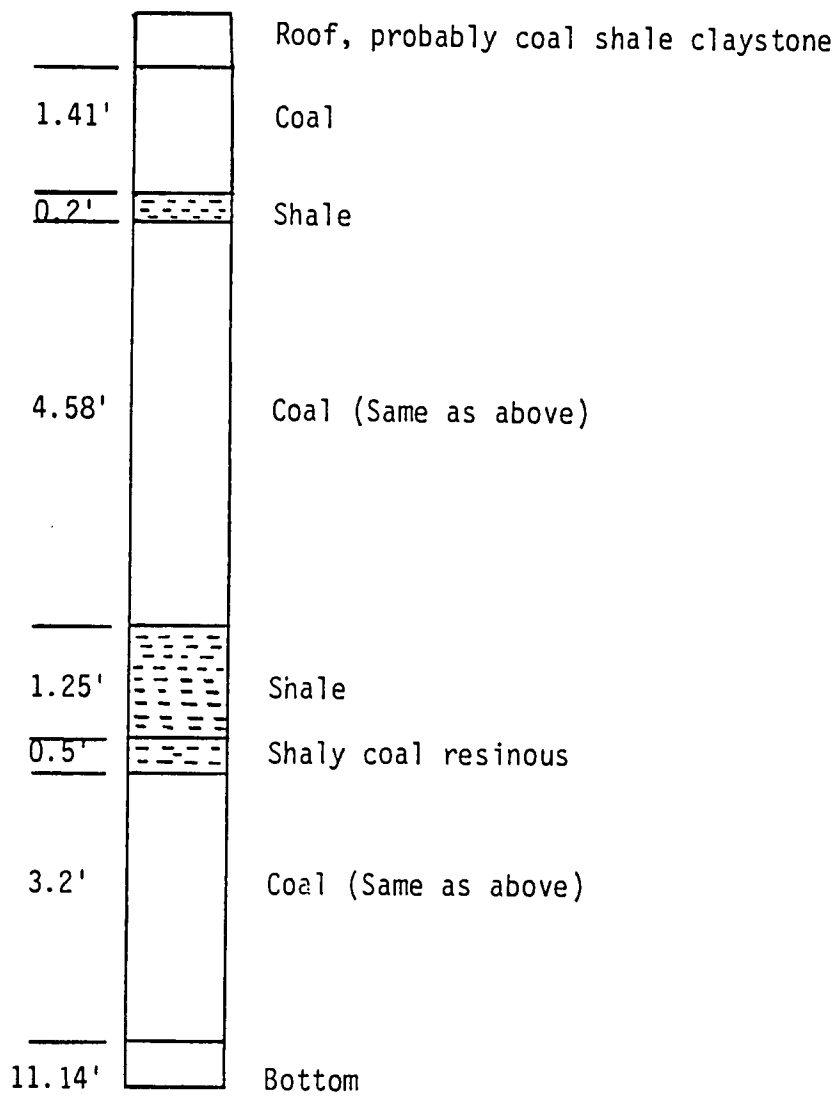




- 413

FIGURE 4.2.2 CHARACTERISTIC WASHABILITY CURVE 4" X 100M SIZE FRACTION
LAKHRA FIELD - PMDC MINE NO. 2

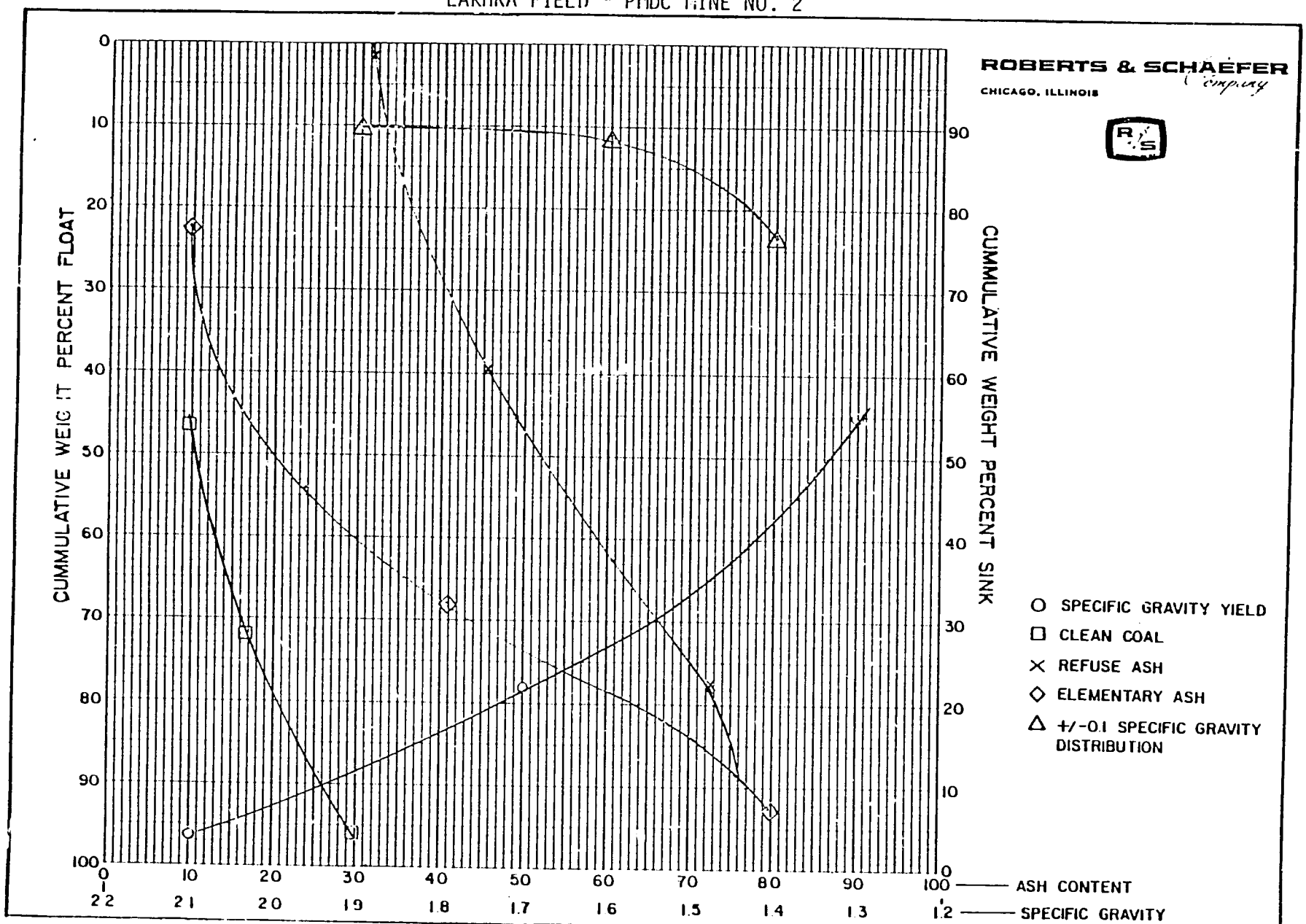

FIGURE 4.2.3 CHARACTERISTIC WASHABILITY CURVE 4" X 1-1/2" SIZE FRACTION
LAKHRA FIELD - PMDC MINE NO. 2

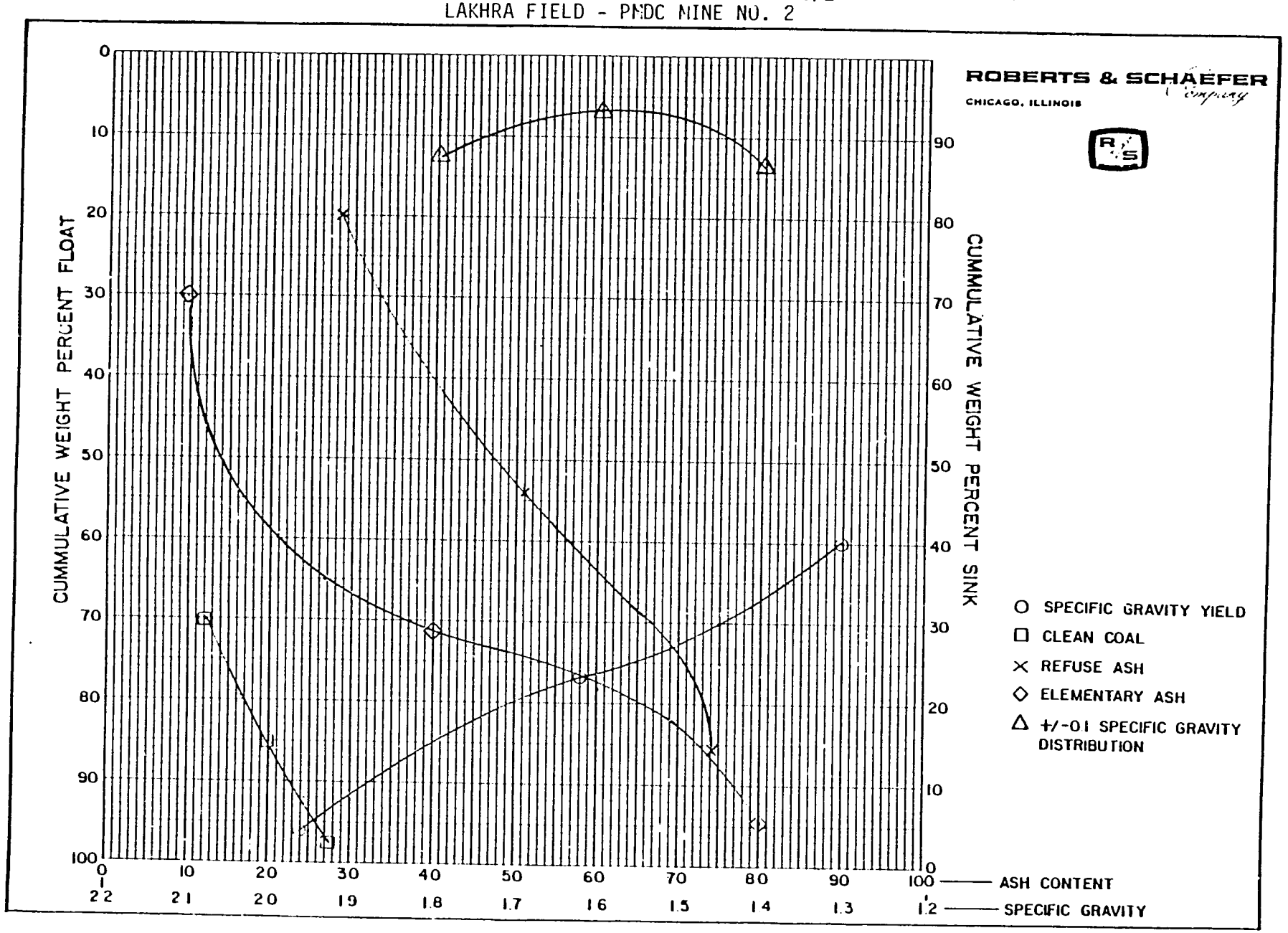

FIGURE 4.2.4 CHARACTERISTIC WASHABILITY CURVE 1-1/2" X 3/4" SIZE FRACTION
LAKHRA FIELD - PMDC MINE NO. 2

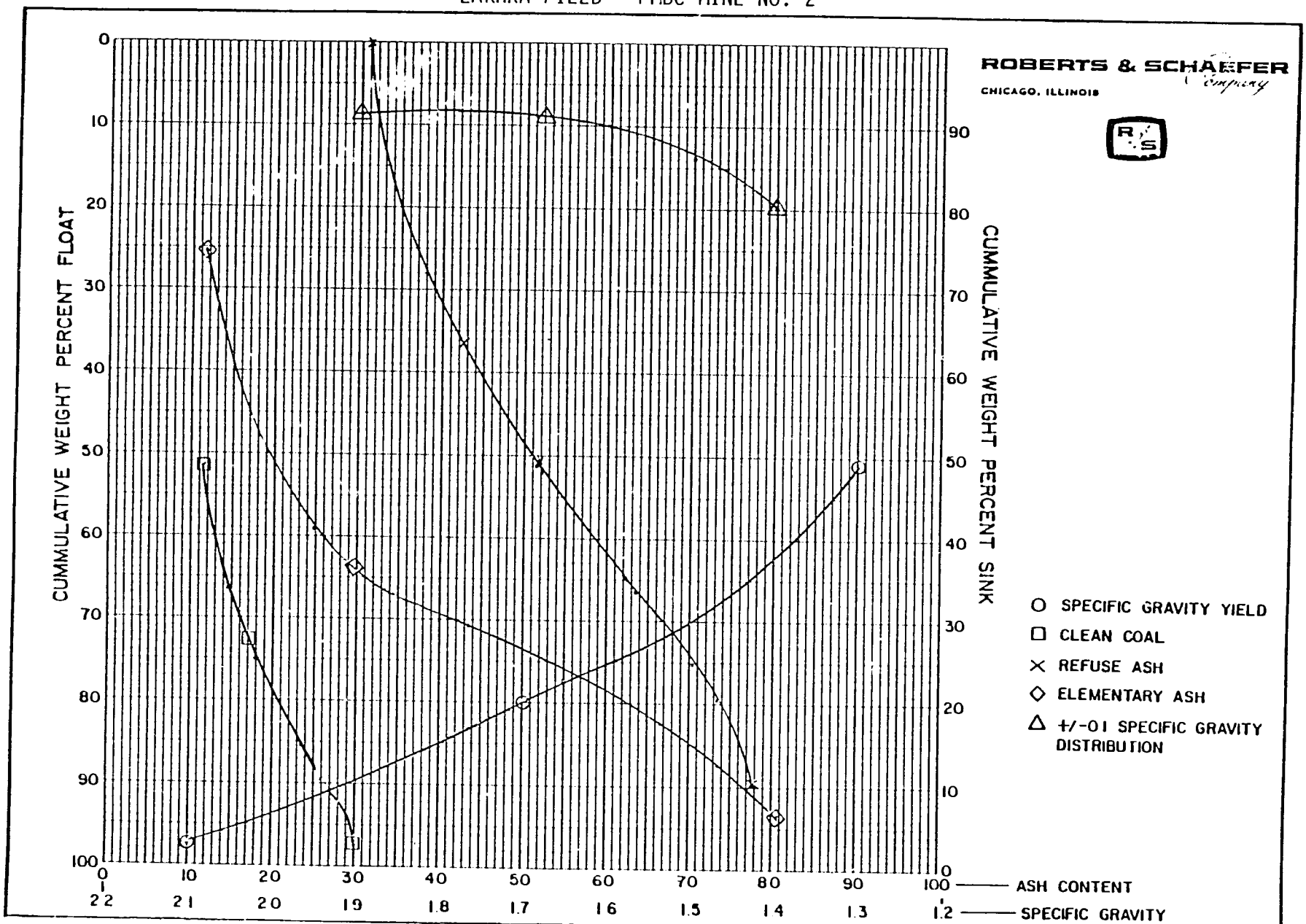

FIGURE 4.2.5 CHARACTERISTIC WASHABILITY CURVE 3/4" X 1/2" SIZE FRACTION
LAKHRA FIELD - PMDC MINE NO. 2

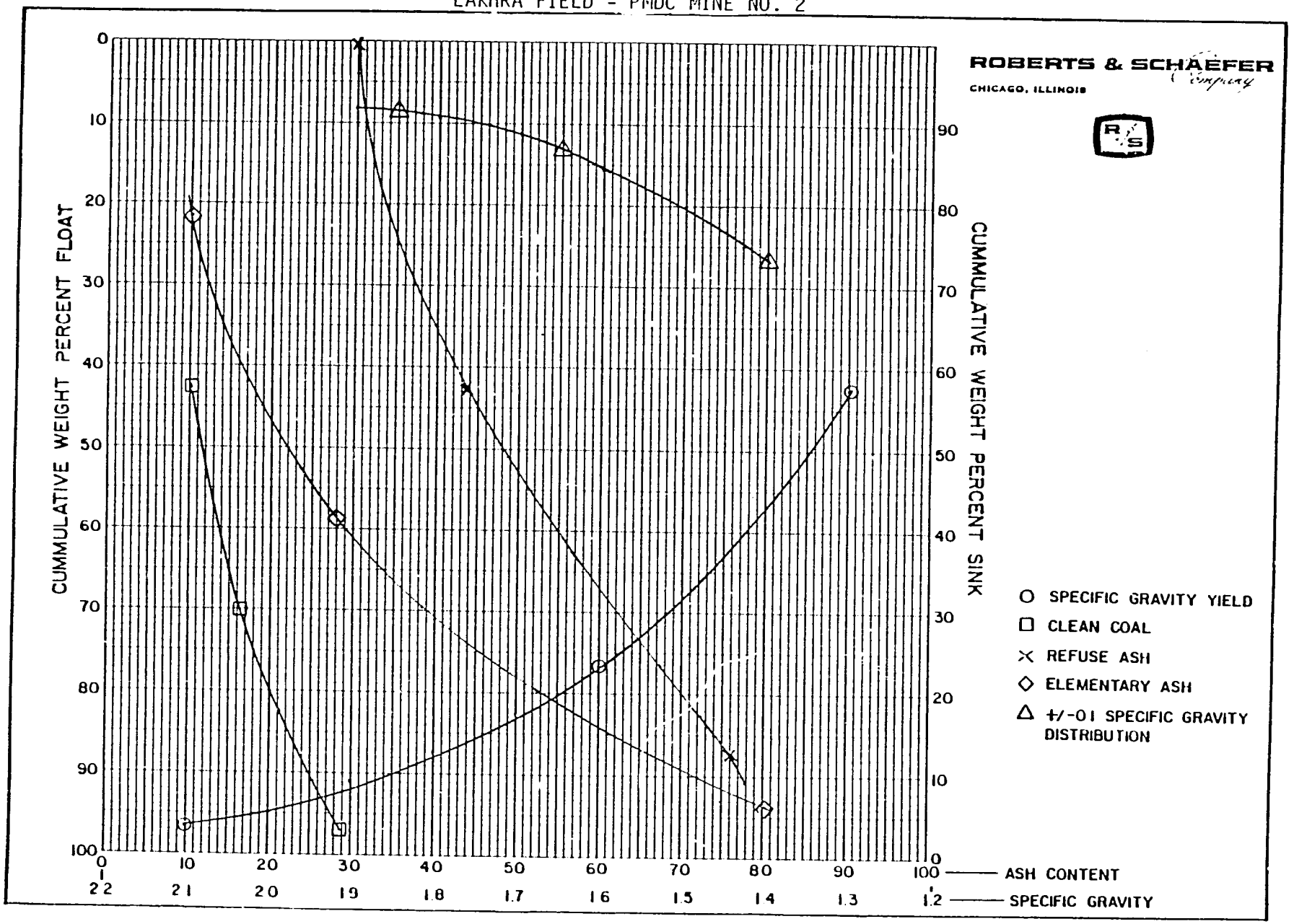

FIGURE 4.2.6 CHARACTERISTIC WASHABILITY CURVE 1/2" X 1/4" SIZE FRACTION
LAKHRA FIELD - PMDC MINE NO. 2

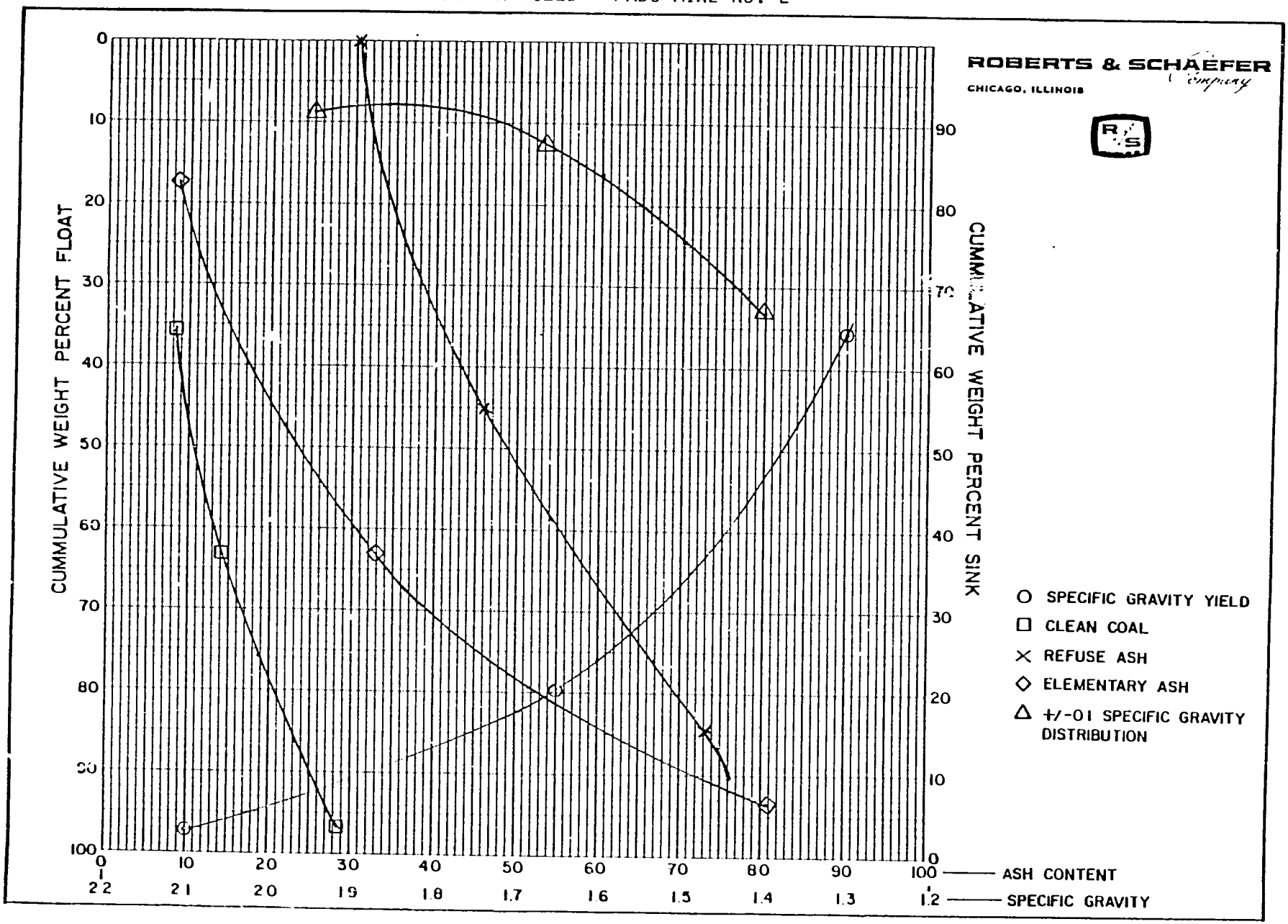

FIGURE 4.2.7 CHARACTERISTIC WASHABILITY CURVE 1/4" X 28M SIZE FRACTION
LAKHRA FIELD - PMDC MINE NO. 2

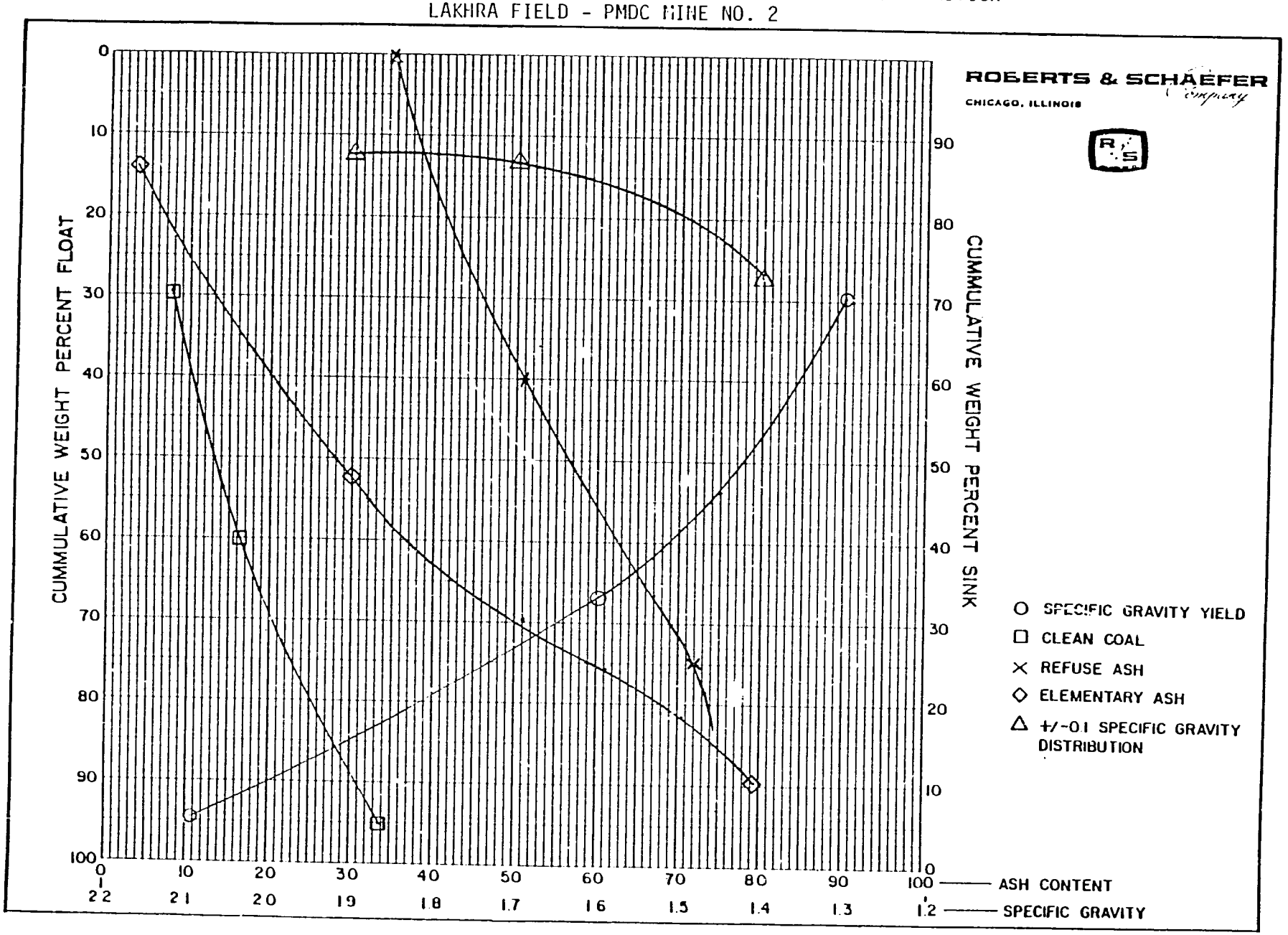

FIGURE 4.2.8 CHARACTERISTIC WASHABILITY CURVE 28M X 100M SIZE FRACTION
LAKHRA FIELD - PMDC MINE NO. 2

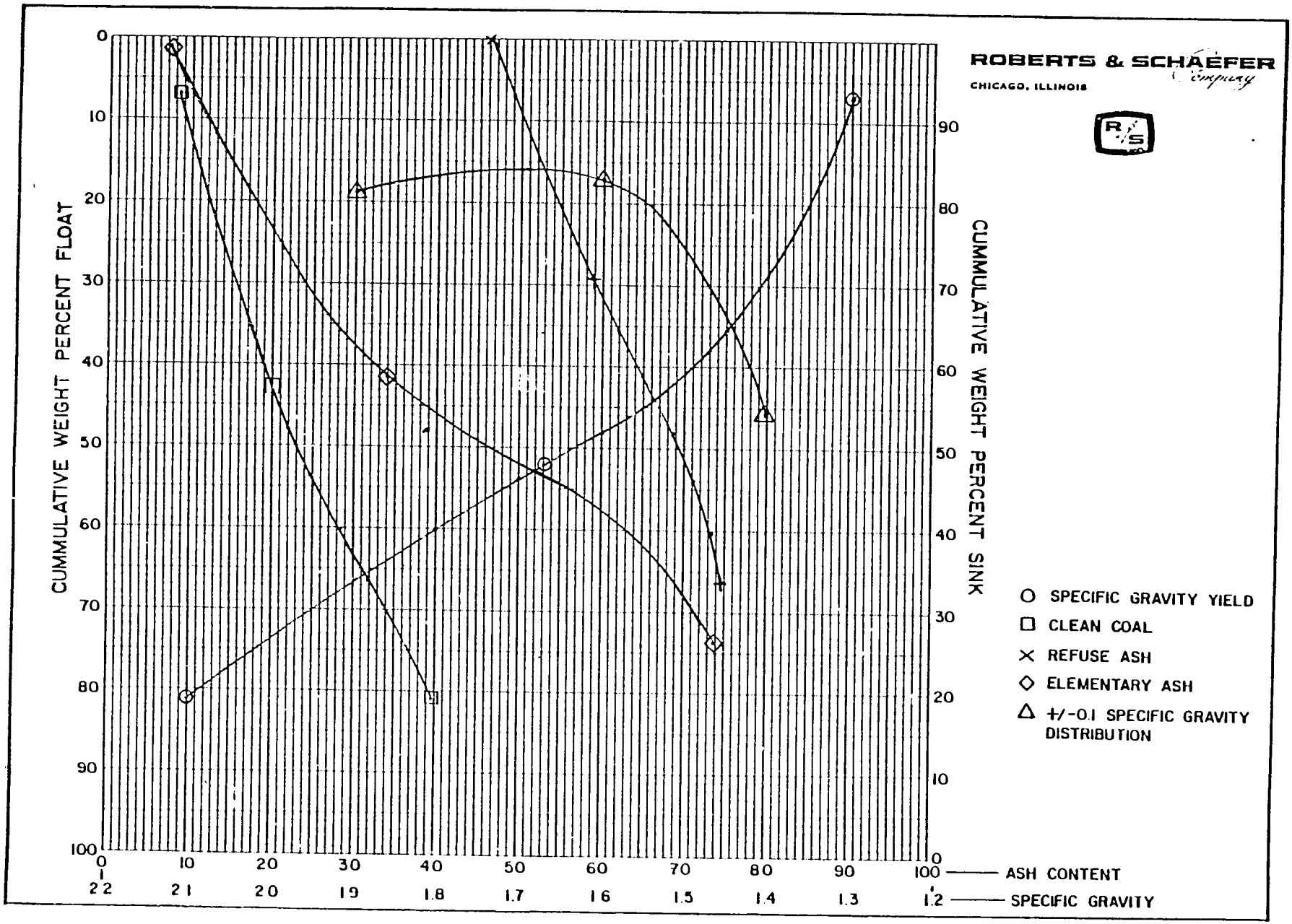

FIGURE 4.2.9 BTU/LB. VS. ASH (4" x 100% - SEAM ONLY)

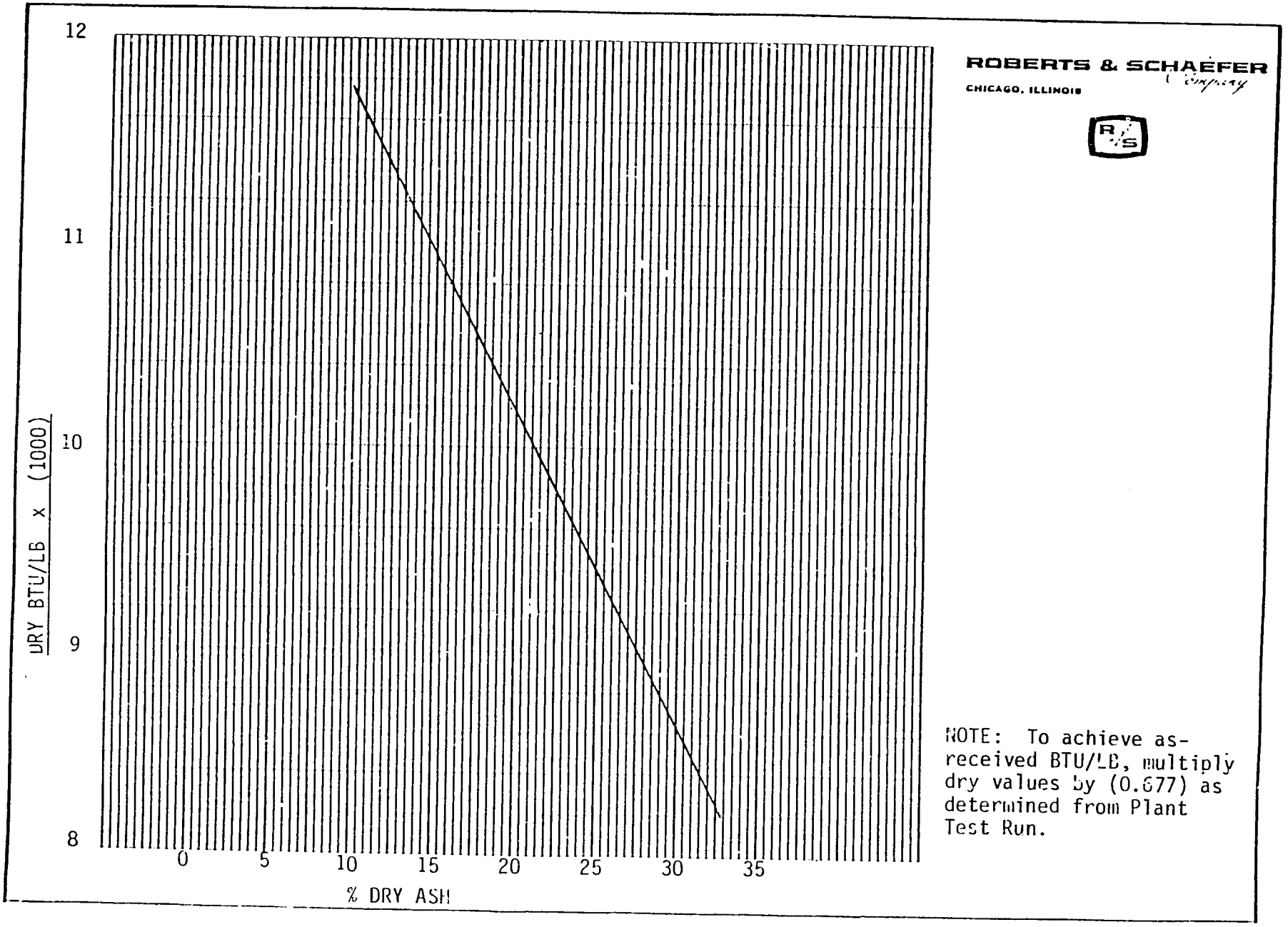

FIGURE 4.2.10 EFFECTS OF TOTAL CLEANING ON ASH/SULFUR REMOVAL AND BTU RECOVERY

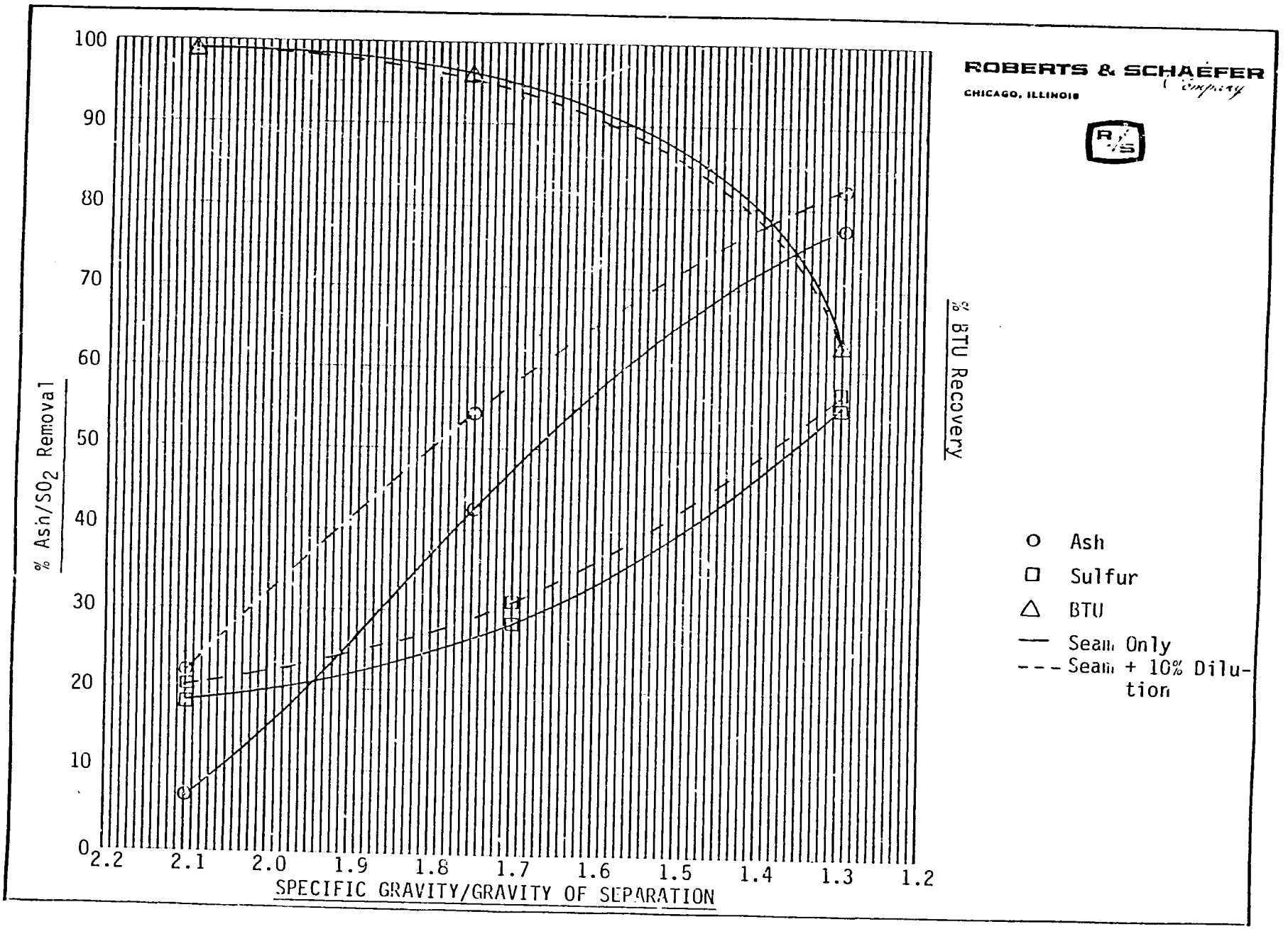

FIGURE 4.2.11 TOTAL VS. PARTIAL CLEANING AND THE EFFECT ON ASH/SULFUR REMOVAL AND BTU RECOVERY (SEAM ONLY)

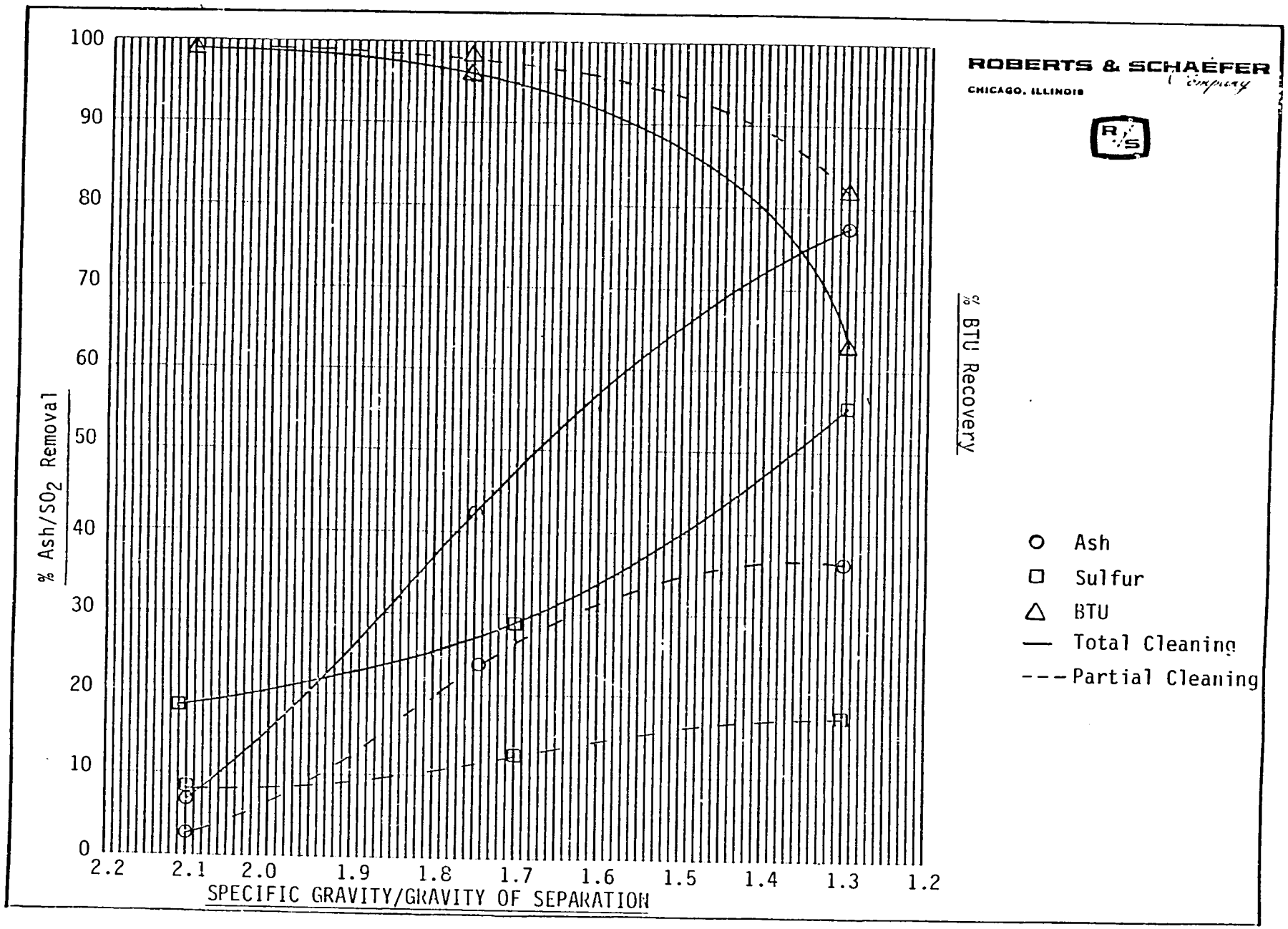

FIGURE 4.2.12 RAW COAL SIZE REDUCTION DUE TO AIR DRYING

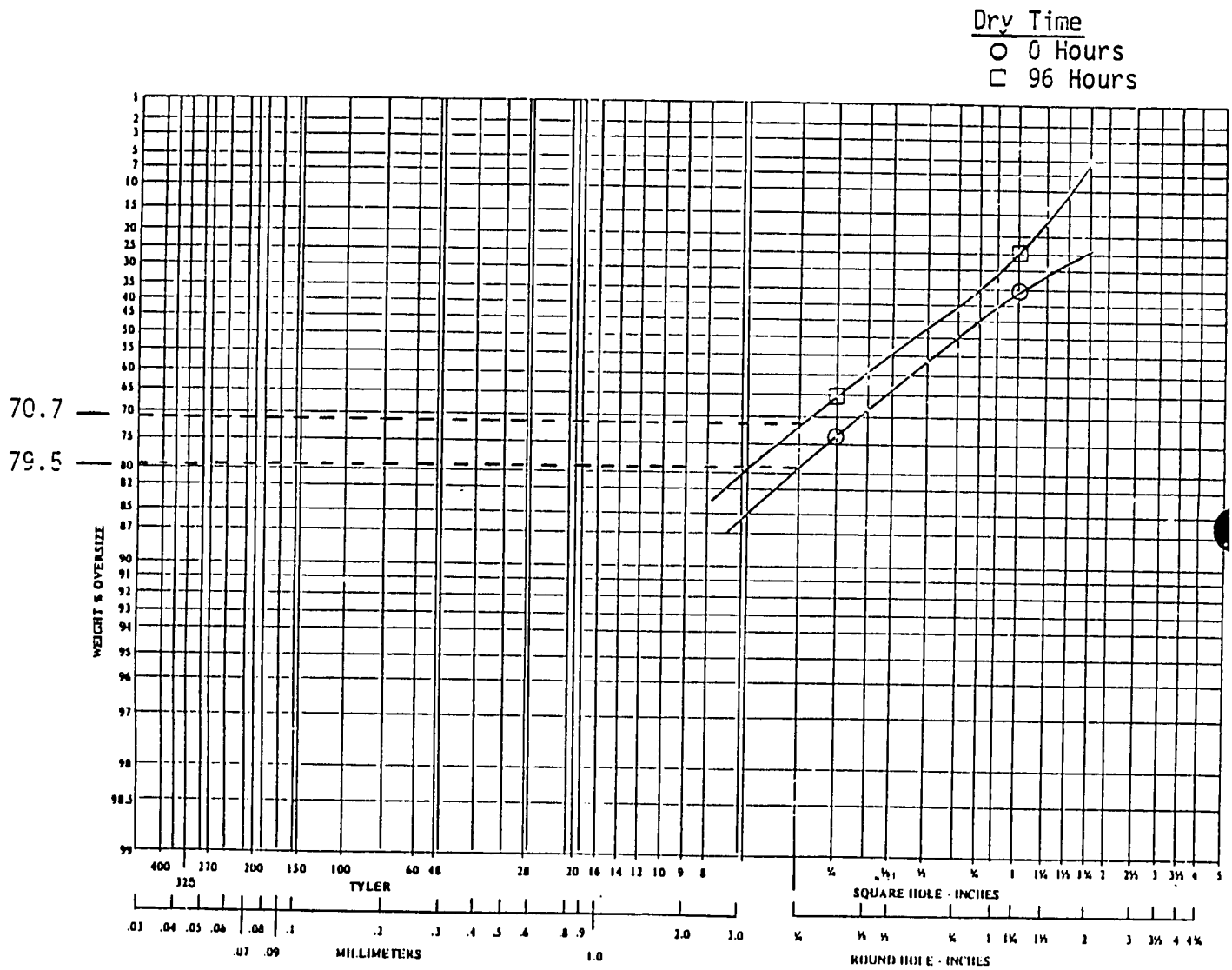

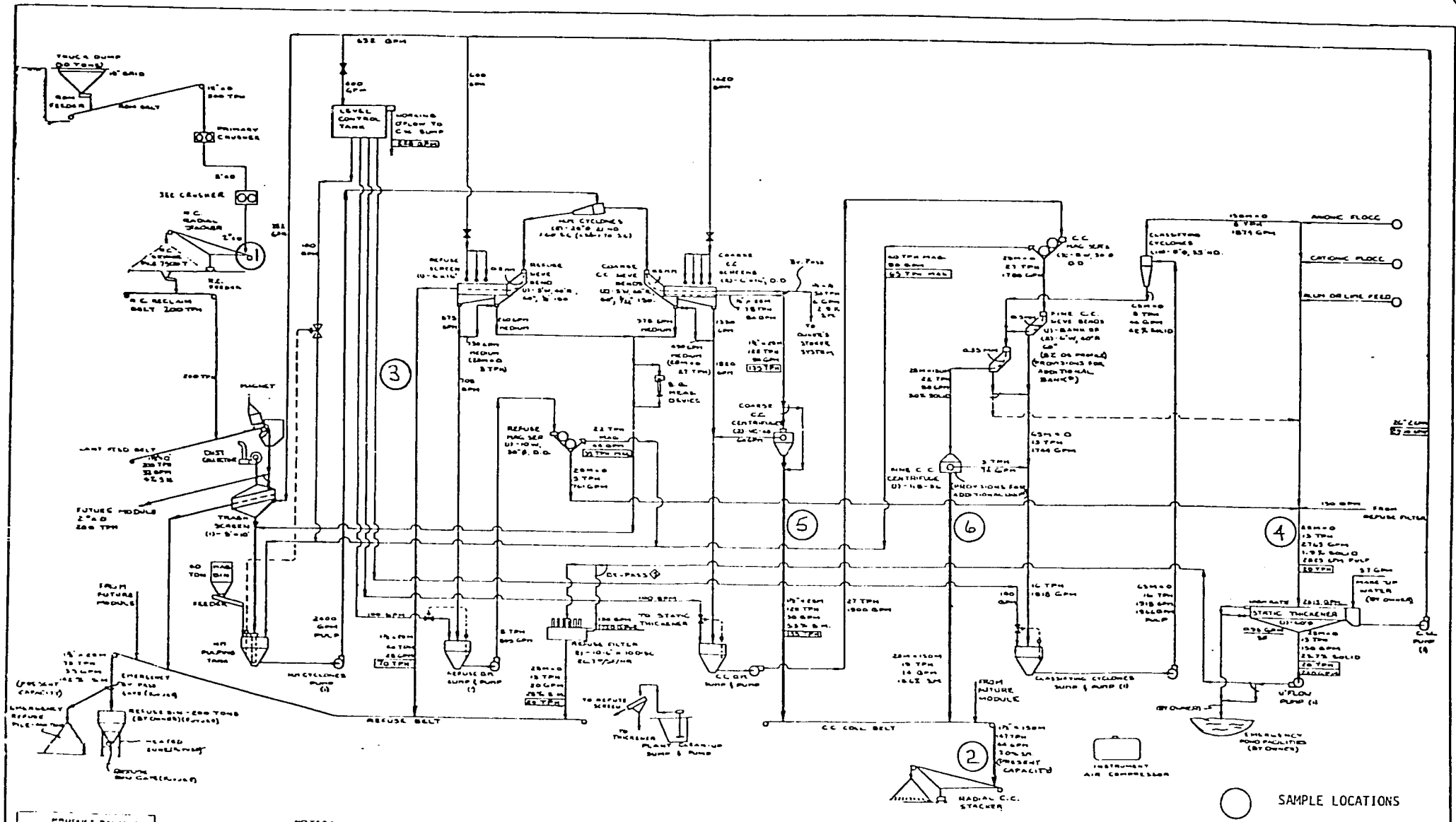


FIGURE 4.2.13 East Fairfield Coal Company Flowsheet

ROBERTS & SCHAEFER Company
CHICAGO - SALT LAKE CITY

FLOWSHEET FOR 15"x0 RAW COAL
200 TPH MODULAR COAL PREPARATION PLANT
THE EAST FAIRFIELD COAL COMPANY
NORTH LIMA, OHIO

8010-FSI

FIGURE 4.2.14 DISTRIBUTION CURVE FOR 2-1/2" x 28M RAW COAL CLEANED IN HEAVY MEDIUM CYCLONES

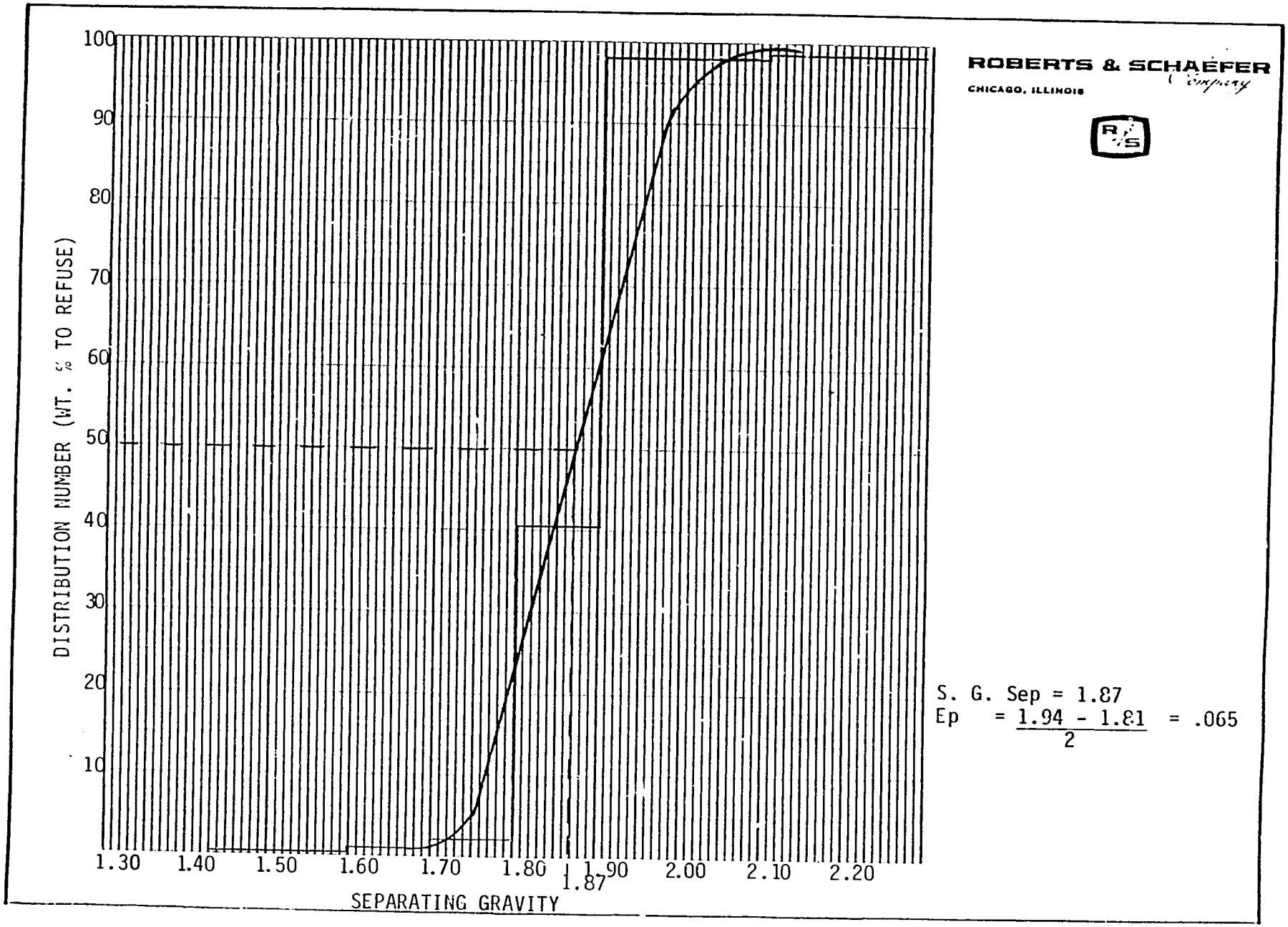




424

Figure 4.4-1

LAKHRA : BASE LINE COAL EVALUATION

HEAT THROUGH W W PANEL : TEST 1

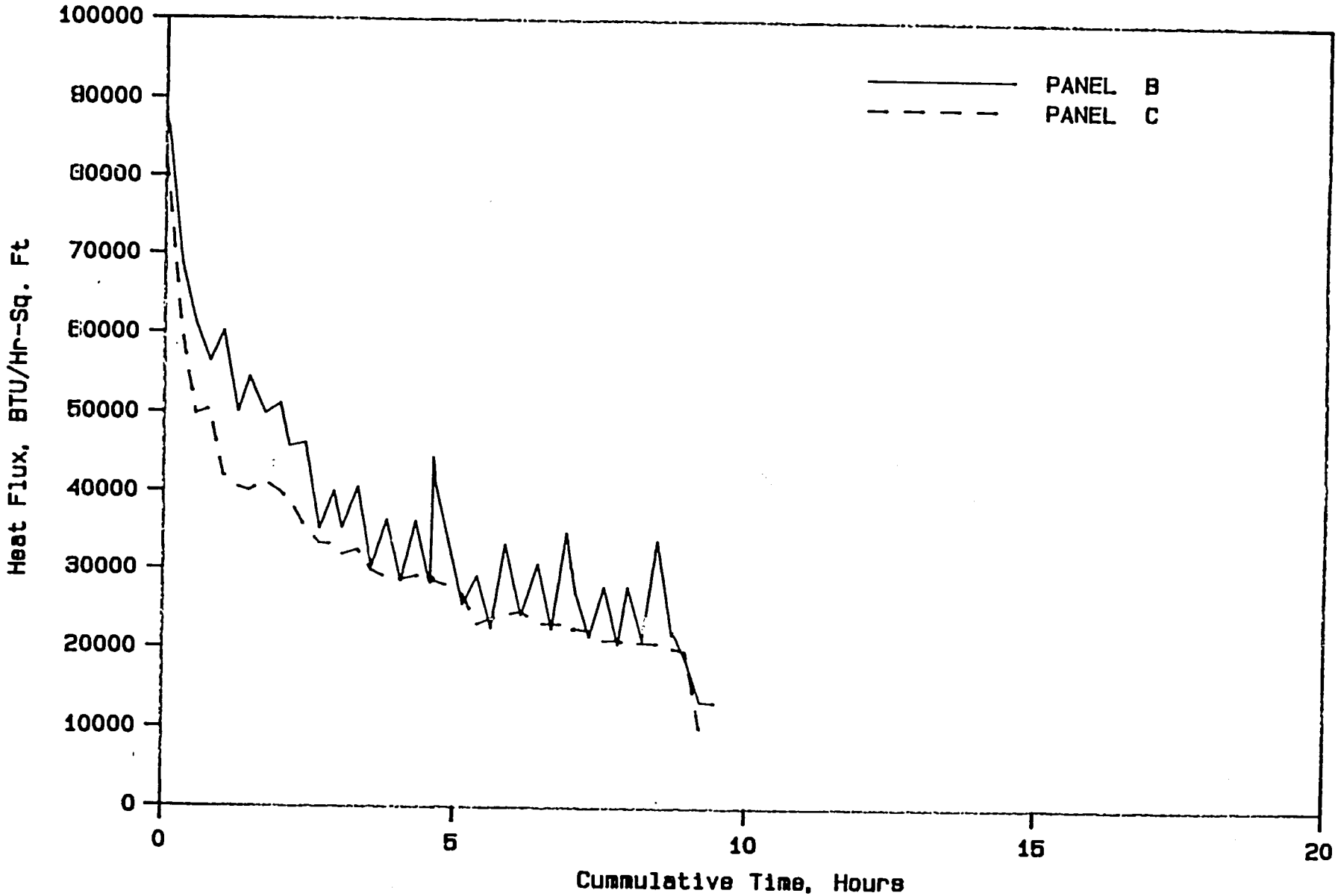


B

Figure 4.4-2

LAKHRA : BASE LINE COAL EVALUATION

HEAT FLUX THROUGH W W PANEL : TEST 2

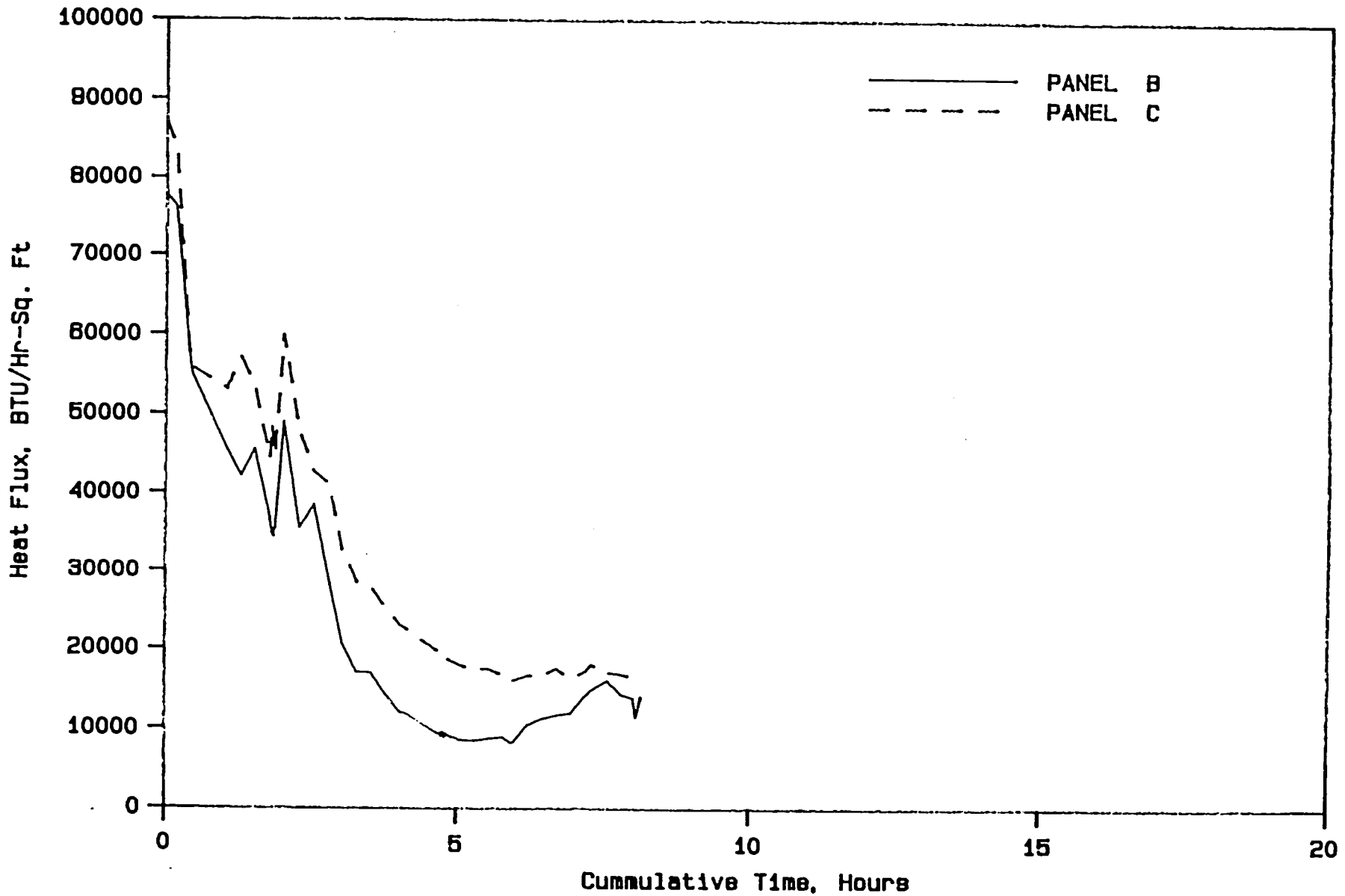


B

Figure 4.4-3

LAKHRA : BASE LINE COAL EVALUATION

HEAT FLUX THROUGH W W PANEL : TEST 3

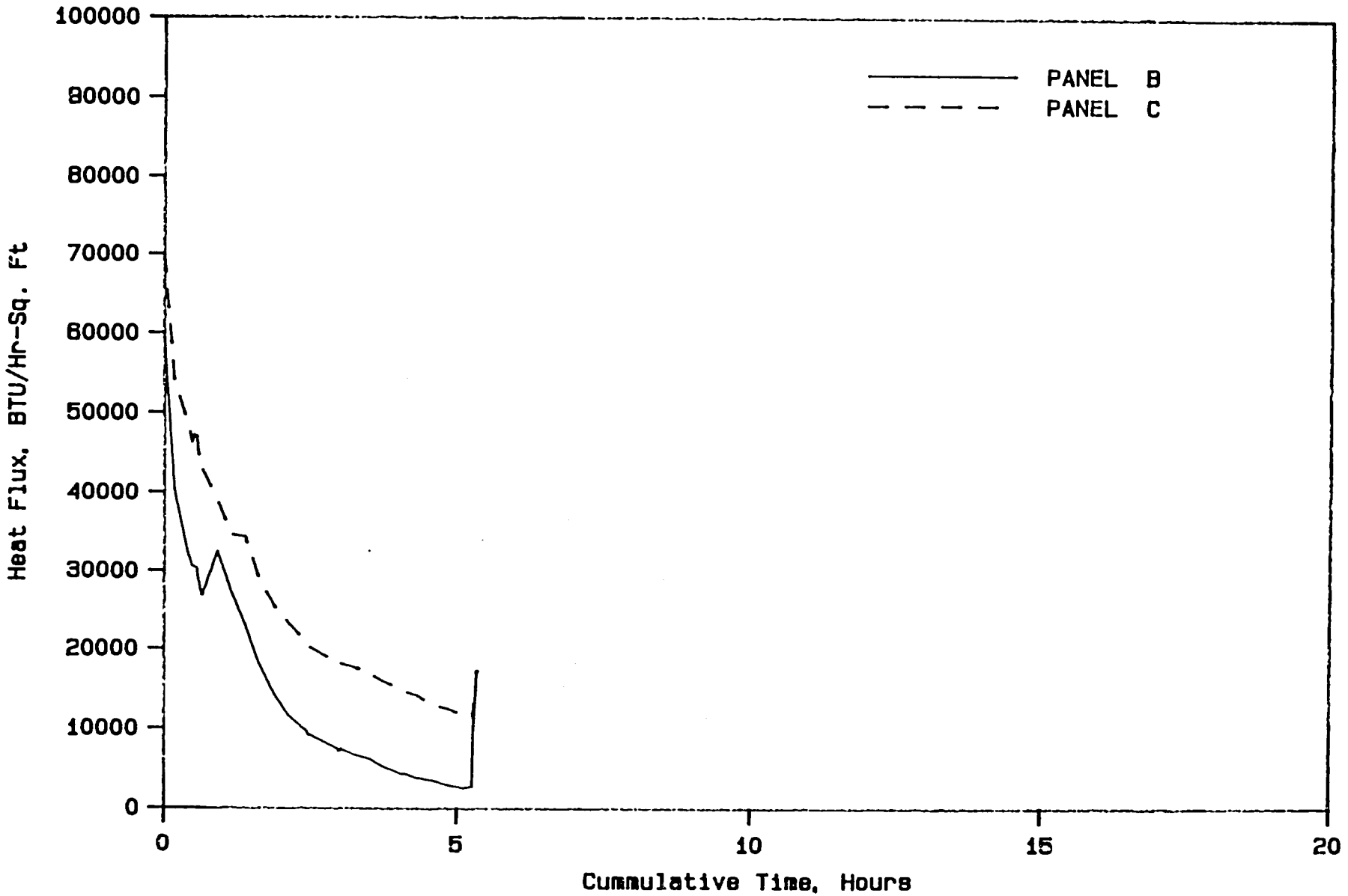


B

Figure 4.4-4

LAKHRA : BASE LINE COAL EVALUATION

HEAT FLUX THROUGH W W PANEL : TEST 4

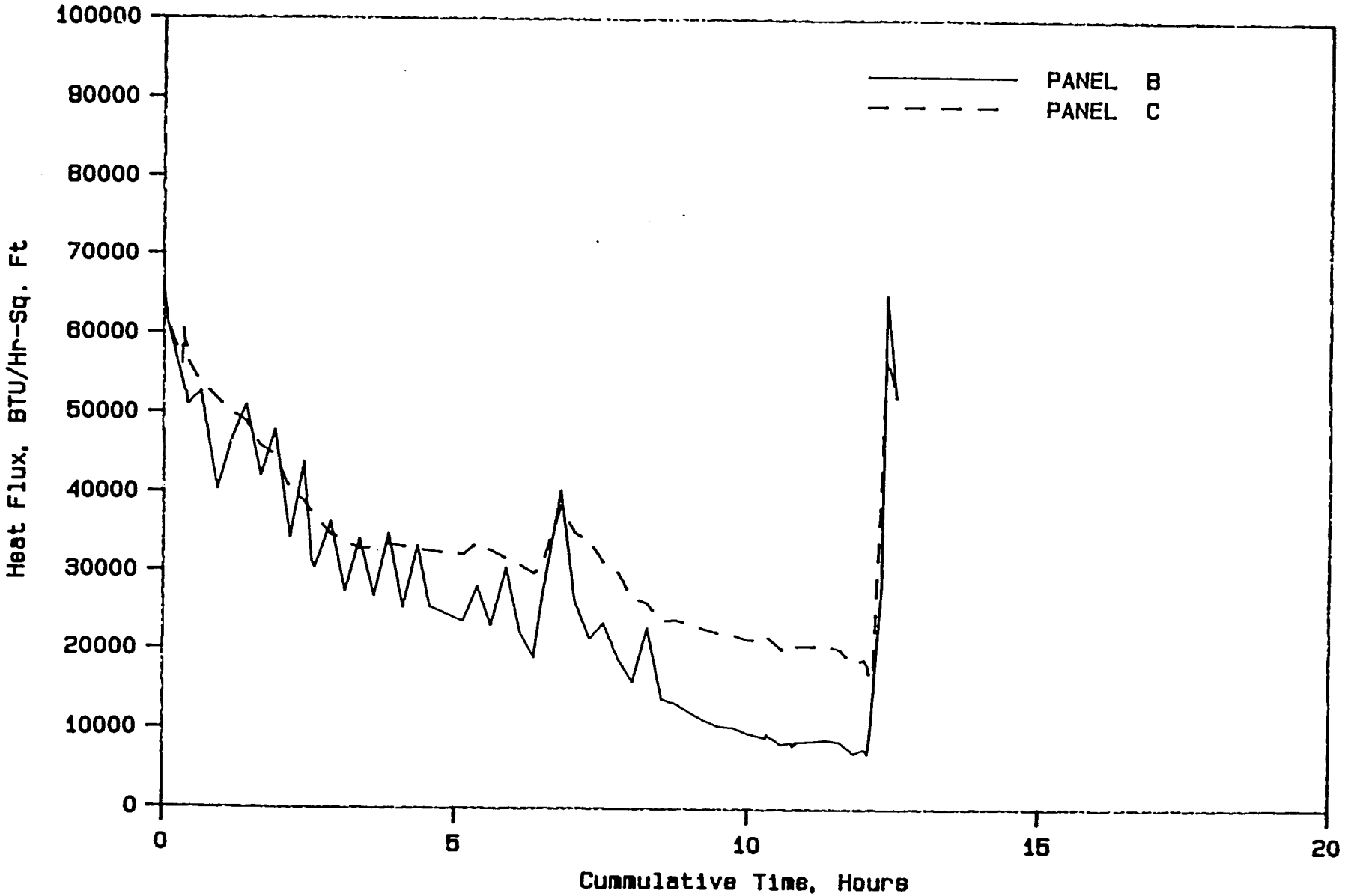


B

Figure 4.4-5

LAKHRA : BASE LINE COAL EVALUATION

HEAT FLUX THROUGH W W PANEL : TEST 5

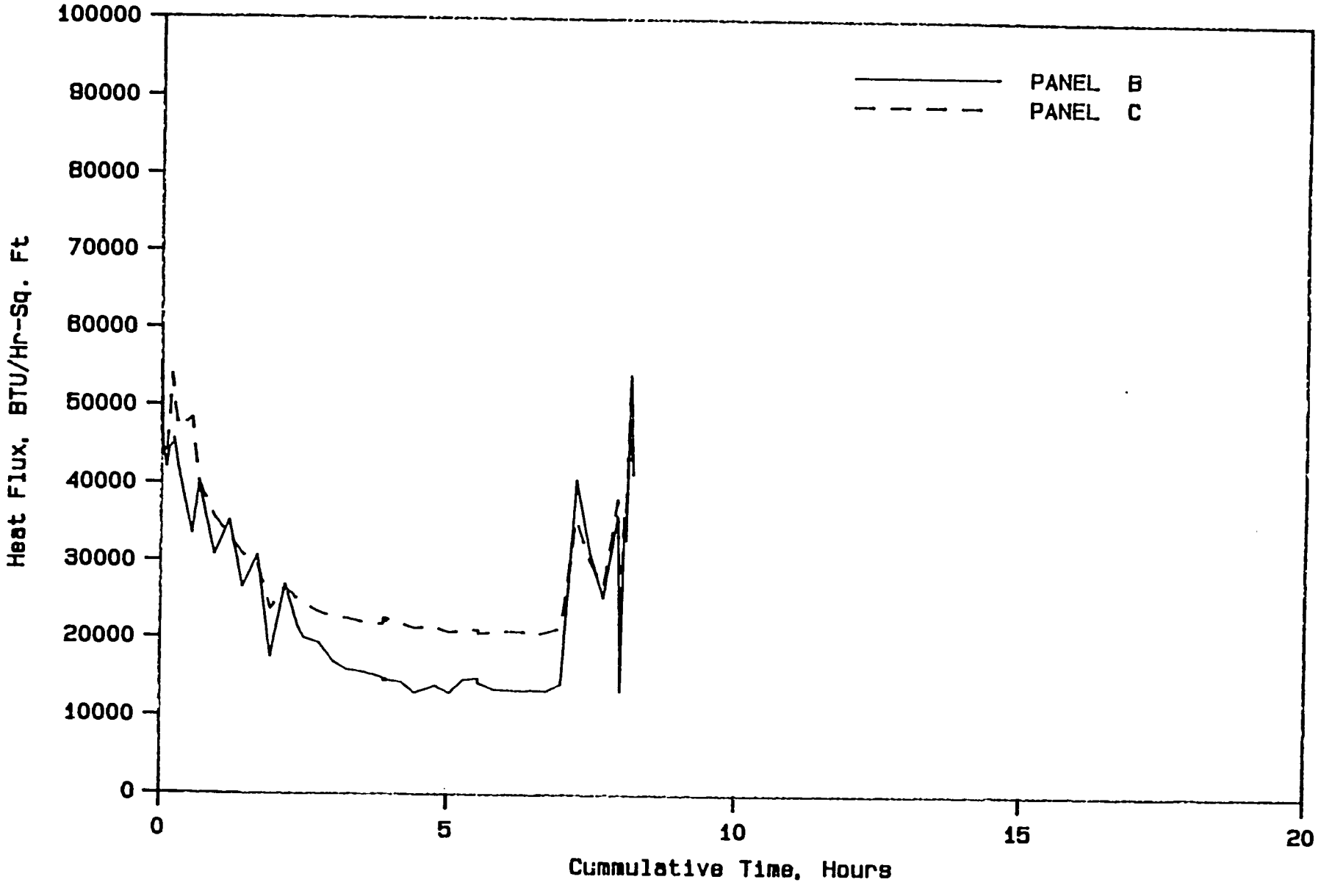


B

Figure 4.4-6

LAKHRA : BASE LINE COAL EVALUATION

HEAT FLUX THROUGH W W PANEL : TEST 8

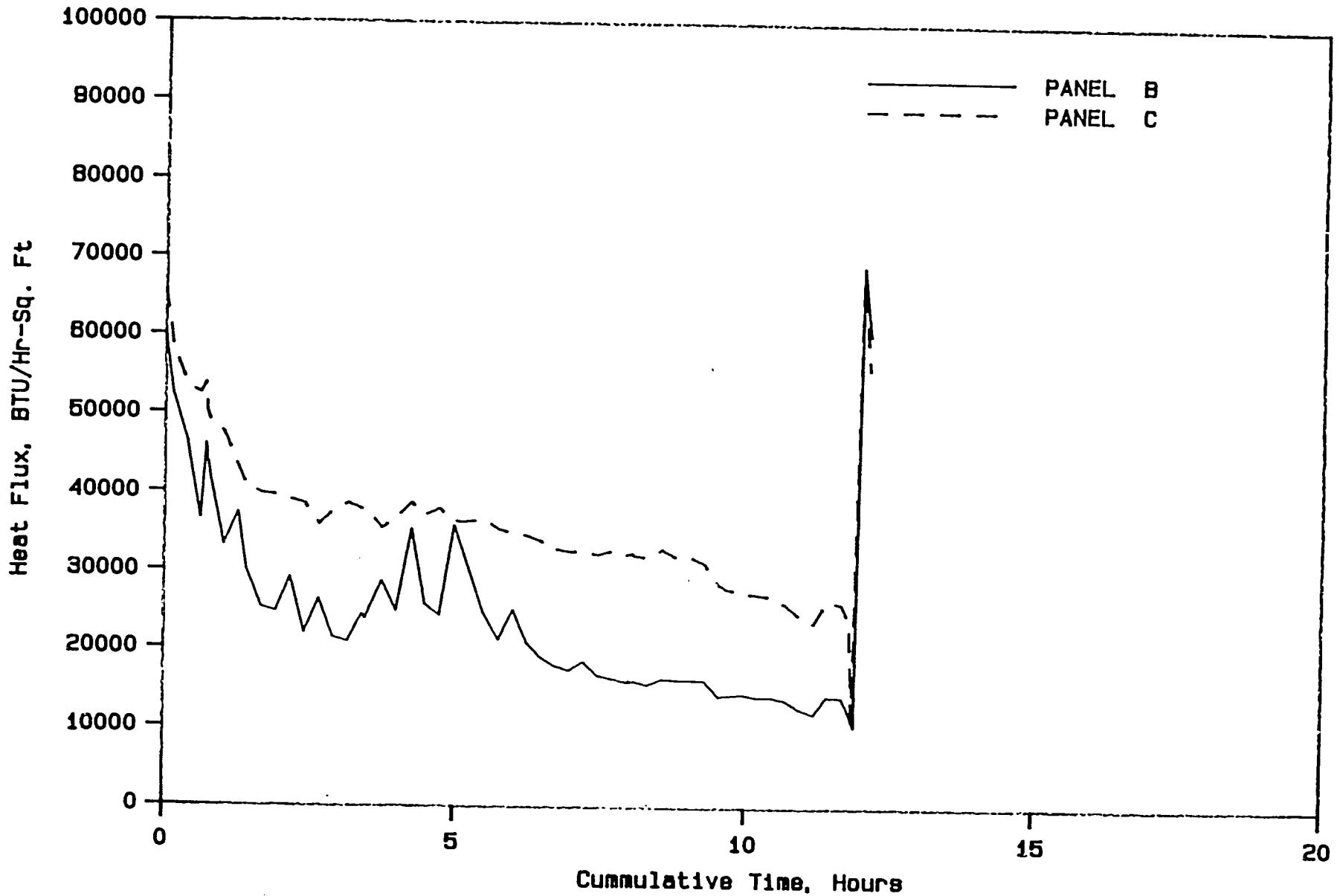


B

Figure 4.4-7

LAKHRA : BASE LINE COAL EVALUATION

HEAT FLUX THROUGH W W PANEL : TEST 7

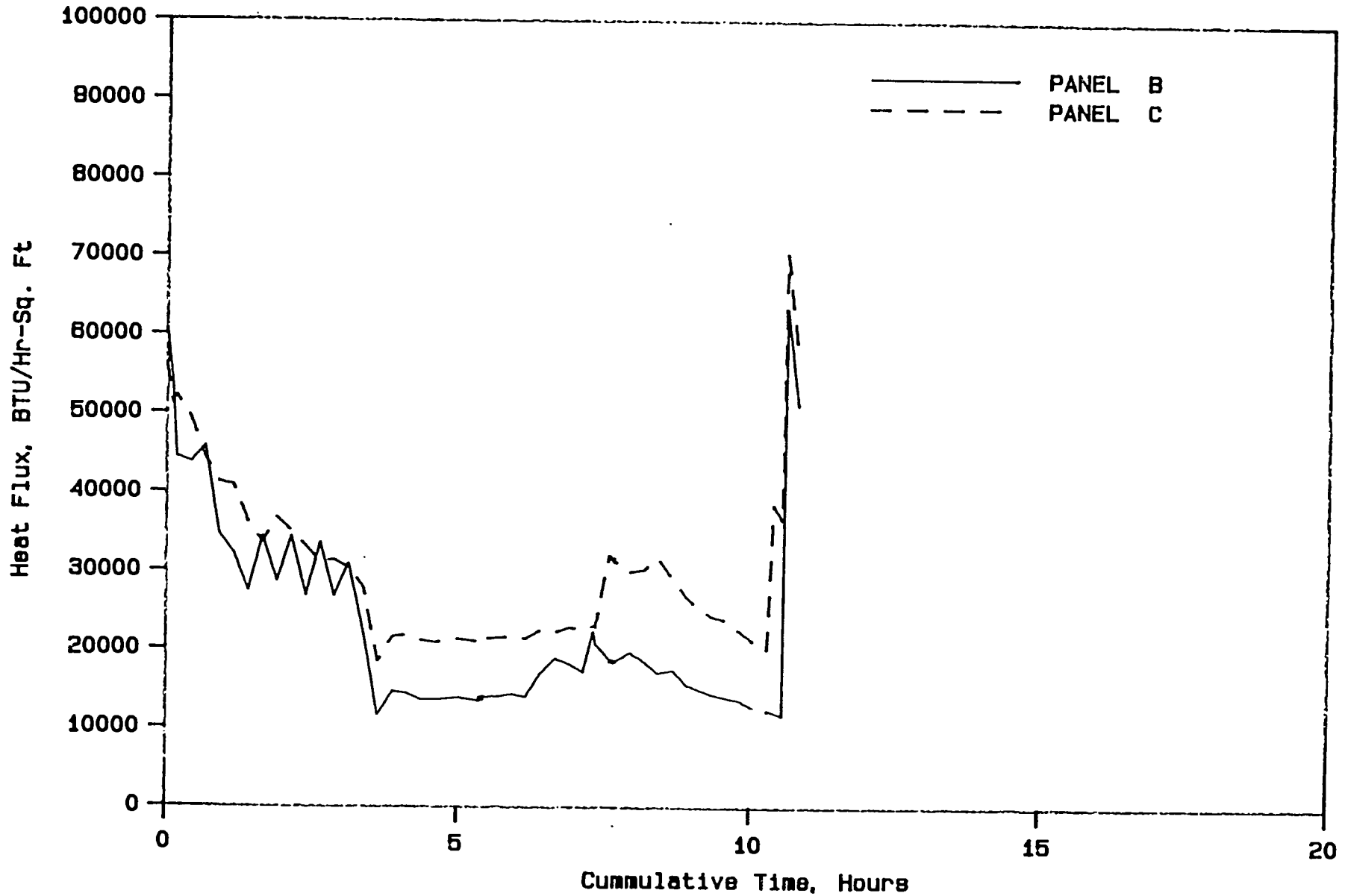


B

Figure 4.4-8

LAKHRA : BASE LINE COAL EVALUATION

HEAT FLUX THROUGH W W PANEL : TEST B

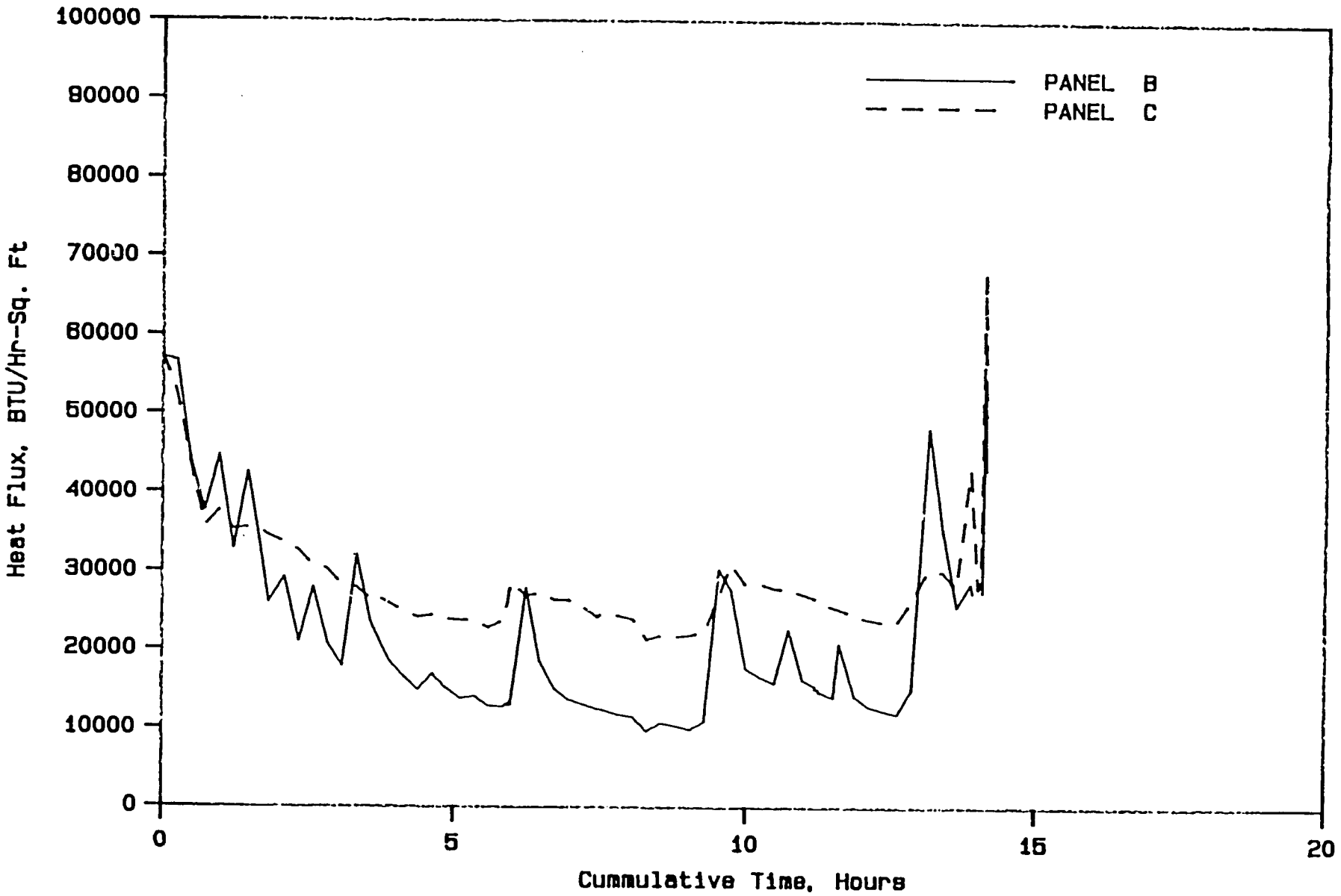


B

Figure 4.5-1

LAKHRA WASHED COAL EVALUATION

HEAT FLUX THROUGH W W PANELS : TEST 1

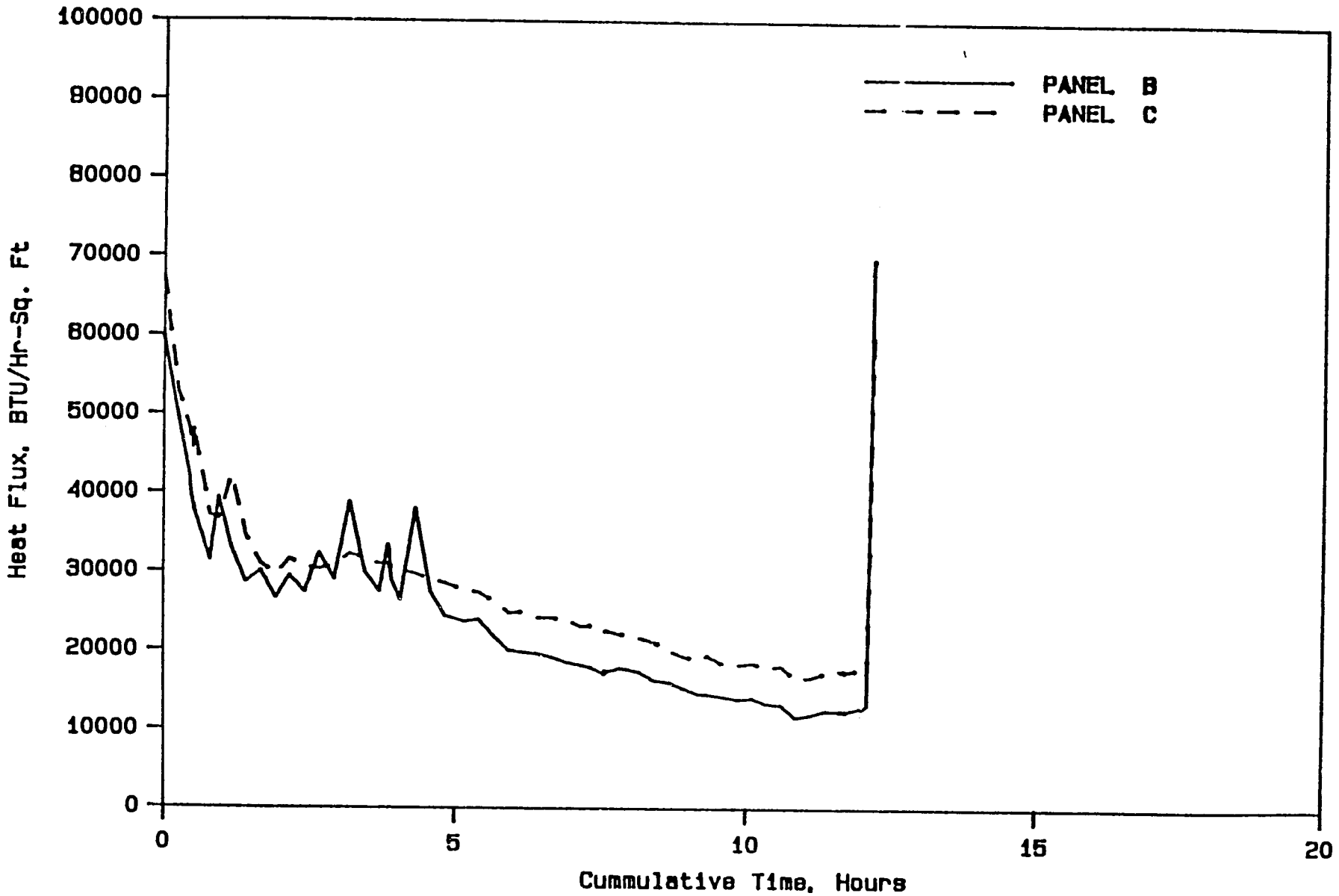


B

Figure 4.5-2

LAKHRA WASHED COAL EVALUATION

HEAT FLUX THROUGH W W PANELS : TEST 2

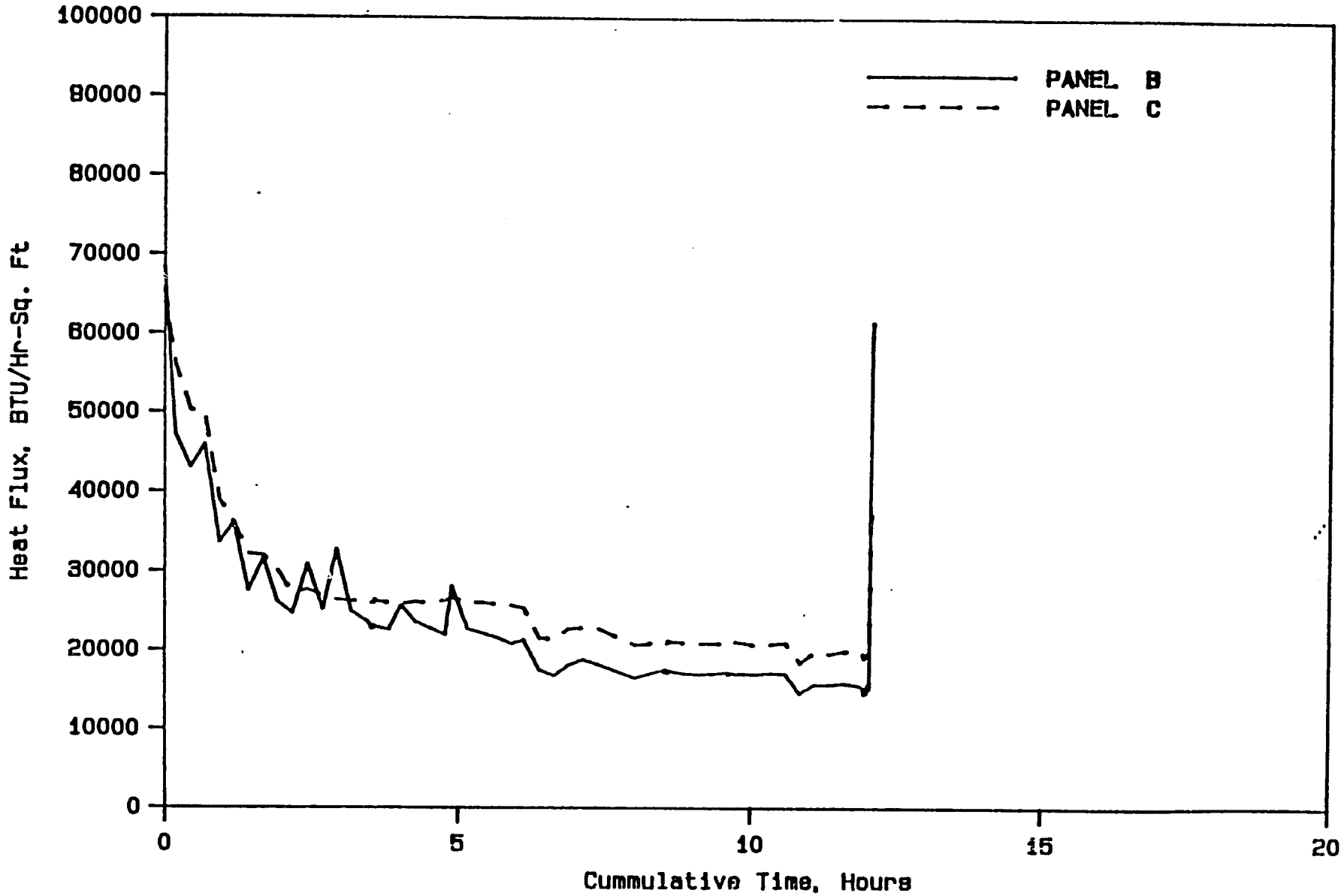


B

Figure 4.5-3

LAKHRA WASHED COAL EVALUATION

HEAT FLUX THROUGH W W PANELS : TEST 3

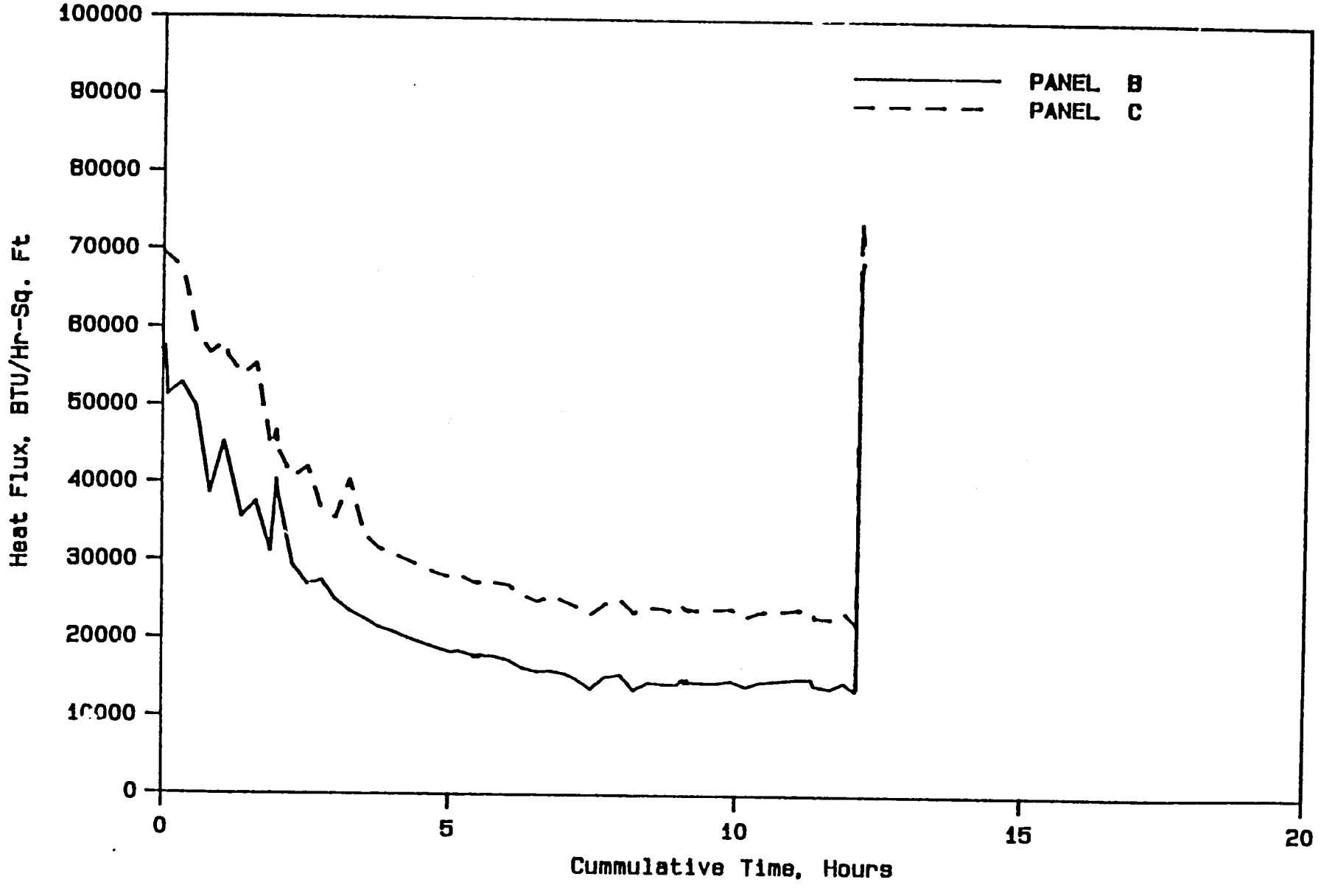


B

Figure 4.5-4

LAKHRA WASHED COAL EVALUATION

HEAT FLUX THROUGH W W PANELS : TEST 4

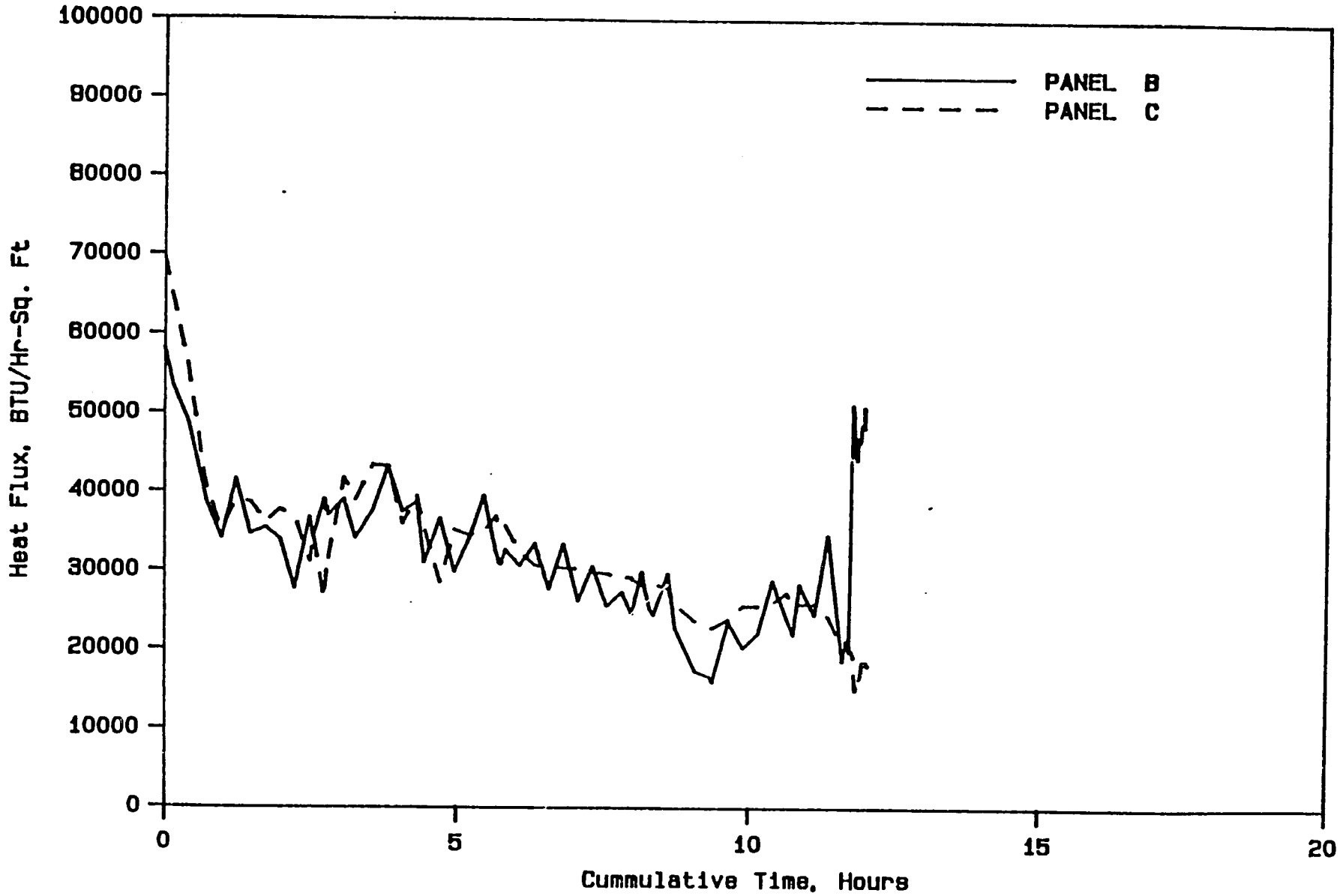


B

Figure 4.5-5

LAKHRA WASHED COAL EVALUATION

HEAT FLUX THROUGH W W PANELS : TEST 5

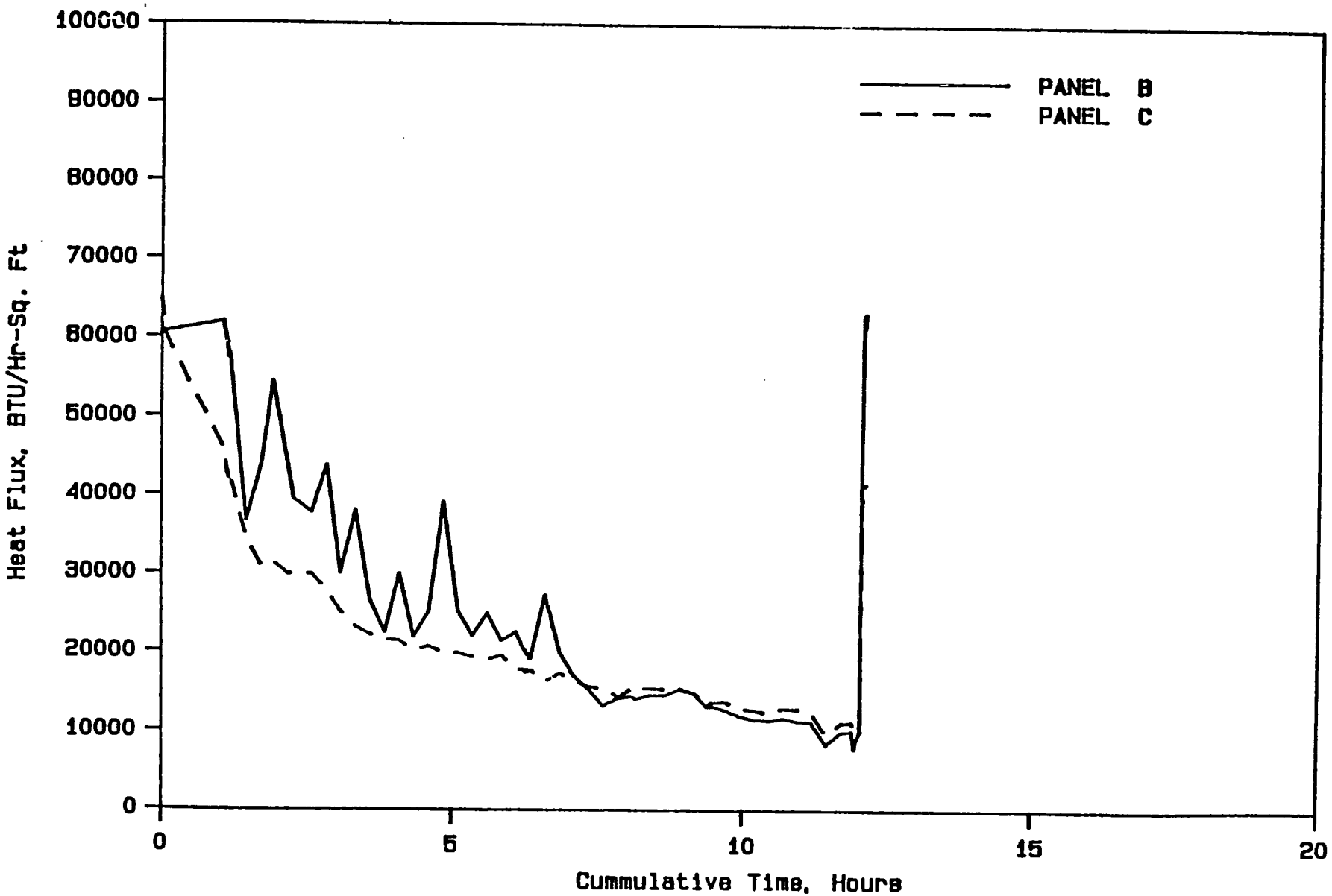


B

Figure 4.5-6

LAKHRA WASHED COAL EVALUATION

HEAT FLUX THROUGH W W PANELS : TEST B

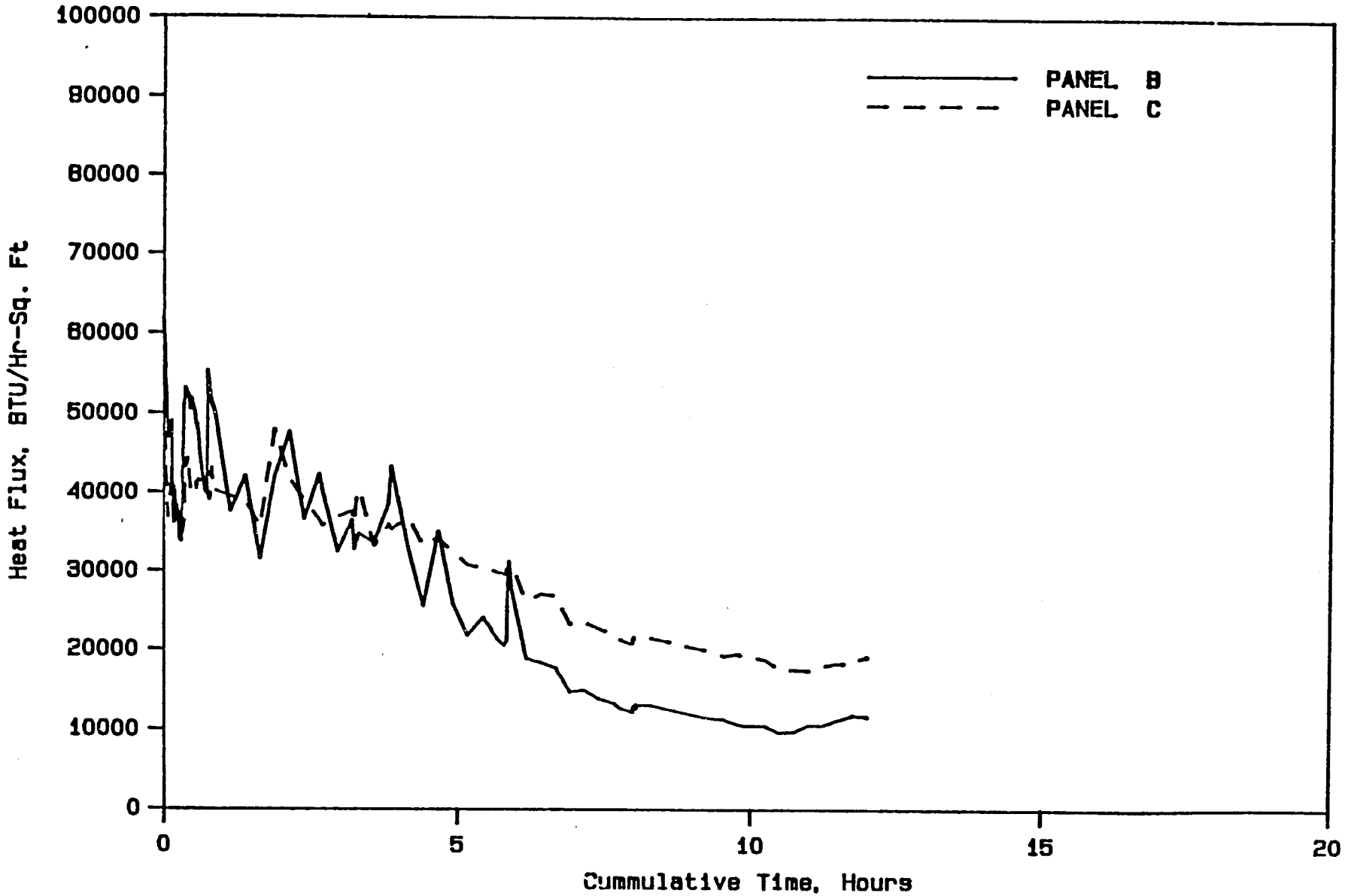


B

Fig. 4.7-1

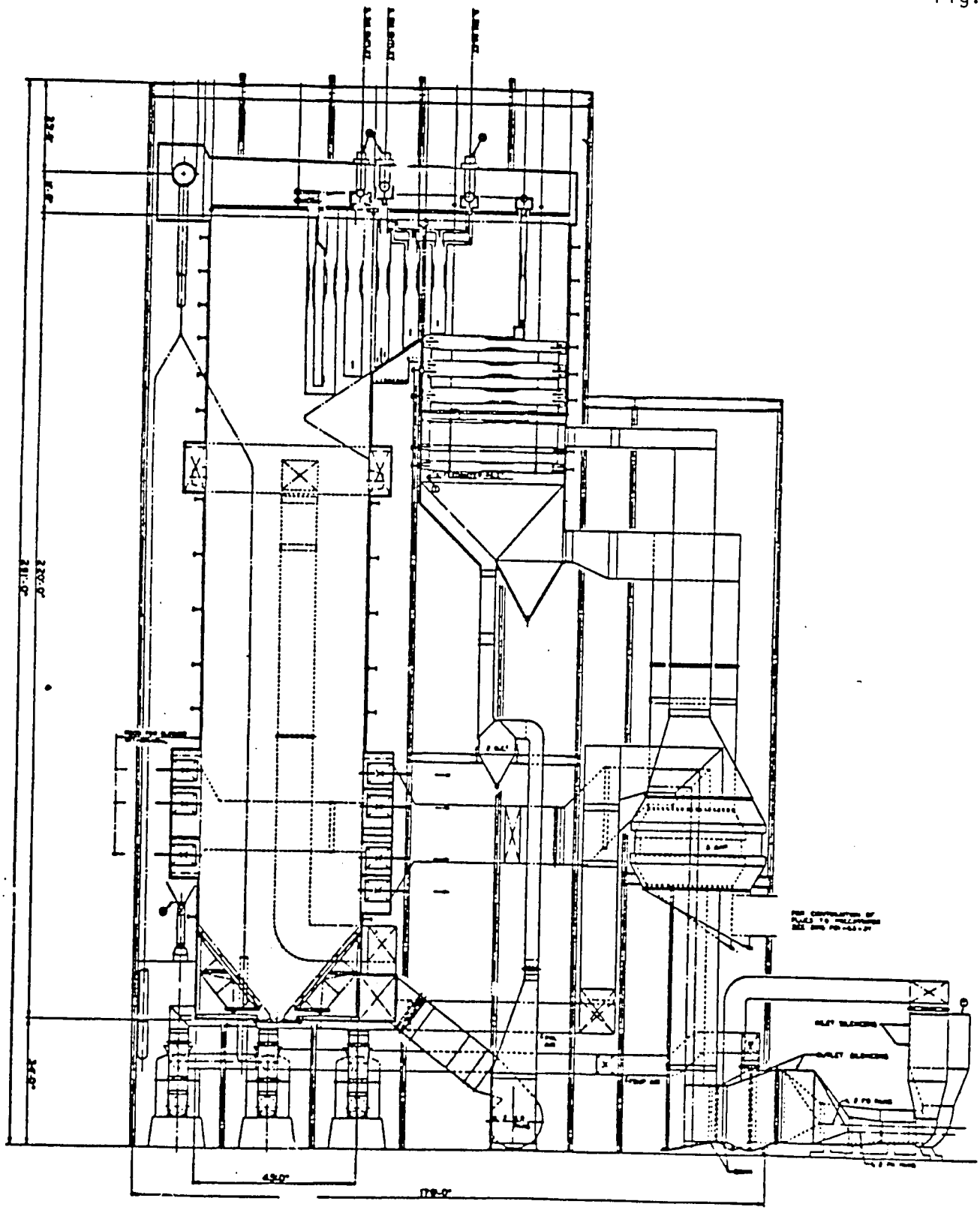

BRAZOS ELECTRIC POWER COOPERATIVE, INC.
G & T COOPERATIVE PROJECT, UNIT NO. 1
TIPPETT AND GEE, INC. CONSULTING ENGINEERS

## BRAZOS ELECTRIC POWER - COOPER, INC.

| | |
|---|---|
| Station | San Miguel #1 |
| B&W Contract | RB-565 |
| MW Rating | 448 |
| Fuel Data | |
| - Source | Western Kentucky |
| - Type | Lignite |
| - Slagging Potential | Severe |
| - Fouling Potential | Severe |
| Furnace W x D x H (Ft.) | 67' x 45' x 220' |
| Burner Clearance (Ft.) | |
| - To Sidewall | 11' |
| - To Hopper | 10' |
| - Top Burner to Arch | 83' |
| Windbox Configuration | Compartmented |
| Burner Type | Dual Register |
| Convection Pass | |
| - Furnace Platens | No |
| - Surface Arrangement | Series |
| - Tube Spacings | |
| - Platens (Furn.) | |
| - Sec. SH | 24" /12" |
| - Pend. RH | 9" |
| - Downpass | 4.5" |
| - Economizer | 4.5" |
| Pulverizers - Type/No. | MPS-89/7 |
| Functional Data | |
| - Input/Plan Btu/Ft$^2$Hr. | 1,460,000 |
| - Burner Zone Rate Btu/Ft$^2$Hr. | 363,000 |
| - Volume Rate Btu/Ft$^3$Hr. | 7,500 |
| - Release Rate Btu/Ft$^2$Hr. | 89,500 |
| - Gas Temp. at Sec. SH | 1862 |
| - Max. Gas Velocity Ft./Sec. | 45 |
| Circulation System | |
| - Ribbed Tubes | Yes |
| - Extent | Burner Zone + 34.5' Furnace |
| Operating Characteristics | |
| - Base Loaded/Cycling | |
| - SH/RH Control Range % | 54% |
| - AH Type & No. | 2 Sec.-Rothemuhle Pri 1 |
| Sootblowers Air/Steam | Steam |
| - Sulfur in Fuel | 1.6 |
| - Ash in Fuel | 28.4 |

# DESIGN INFO SHEET

Figure 4.7-3

Utility: Gas Y Electricidad S.A.
A.E./P.M. Spanish Consultant
Specs.:

Station: Alcudia II

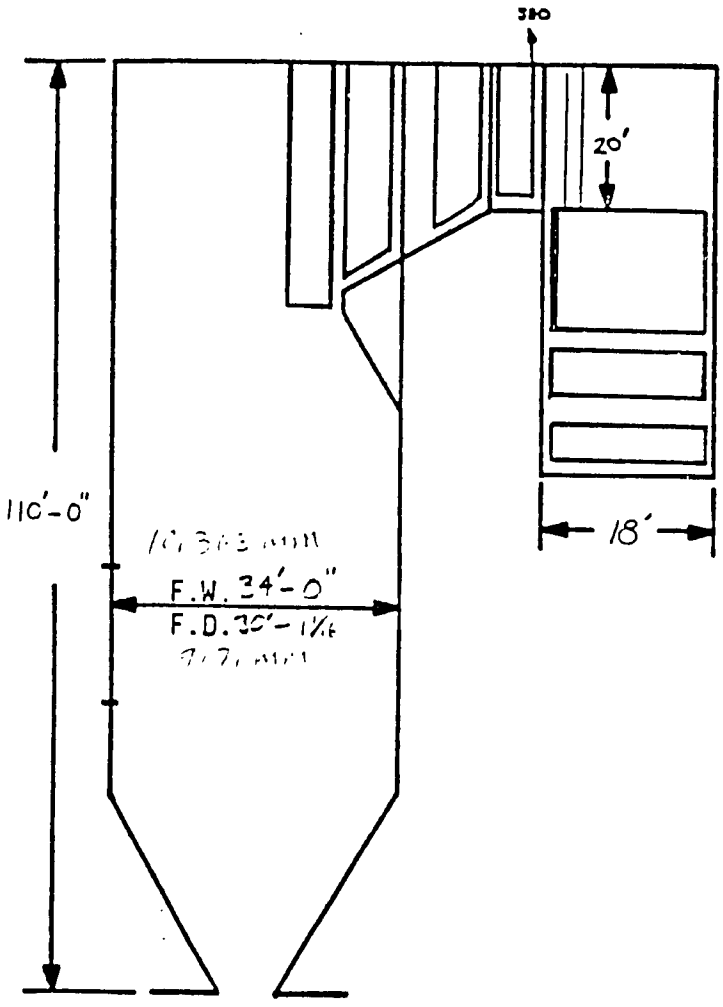


MCR Performance

| | Design | Typical Oper. | |
|---|---|---|---|
| Load-MW | 125 | | |
| SH Flow-#/hr | 882.000 | | |
| RH Flow-#/hr | 772.000 | | |
| Control Load -% | 60 | | |
| SHO T/P °F/PSI | 1000/1900 | | |
| RHI T/P °F/PSI | 680/472 | | |
| FWT | 455 | | |
| X.A./GR | 25/0 | | |
| $T_g$ Ent. AHTR | 756 | | |
| $T_g$ Lvg. AHTR Unc. | 300 | | |
| $T_a$ Ambient/Ent. AHTR | 86 | | |
| Eff. | 85.50 | | |
| $Q_f$- $10^6$ Btu/Hr | 1250 | | |
| NHI/PA-MBtu/Sq.ft. | 1.29 | | |
| NHRR to Panel Bottom-Btu/sq.ft. | 101 300 | | |
| | | | |
| | | | |
| | | | |
| | | | |
| Blr. Design Press.-Psia | 2210 | | |
| RH Design Press.- Psia | 535 | | |

COAL ANALYSIS

~~PREPARED BY~~ GESA

DATE

Figure 4.7-4

| DESCRIPTION | Spanish Lignite Design Spec | R.P. Sample 8/23/75 | | | | |
|---|---|---|---|---|---|---|
| Proximate, Wt. % | | | | | | |
| Moisture | 14.00 | 6.2 | | | | |
| Volatile Matter | 27.95 | 43.1 (25.4) * | | | | |
| Fixed Carbon | 25.80 | 10.3 (2[illegible]) * | | | | |
| Ash | 32.25 | 40.4 | | | | |
| TOTAL | 100 | 1000 | | | | |
| HHV, Btu/lb | 5263 | 4820 | | | | |
| Lb Ash/$10^6$ Btu | 61.28 | 83.8 | | | | |
| Ultimate (as received) | [illegible] | 9.54 | | | | |
| Moisture | 14.00 | 6.2 | | | | |
| Hydrogen | 2.59 | 2.7 | | | | |
| Carbon | 32.85 | 32.1 | | | | |
| Sulfur | 6.02 | 2.3 | | | | |
| Nitrogen | .26 | 0.4 | | | | |
| Oxygen (dif.) | 12.04 | 15.9 | | | | |
| Ash | 32.25 | 40.4 | | | | |
| Grindability | 70 | 85.0 | | | | |
| Ash Fusibility | | | | | | |
| I.T. °F | | 2700+ | | | | |
| S.T. H=W | 2674? | 2700+ | | | | |
| H.T. | | 2700+ | | | | |
| F.T. | | 2700+ | | | | |
| Ash Composition | | | | | | |
| A $SiO_2$ | 18.51 | [illegible] | | | | |
| A $Al_2O_3$ | 11.25 | 4.8 | | | | |
| B $Fe_2O_3$ | 3.23 | [illegible] | | | | |
| B CaO | 47.32 | 52.4 | | | | |
| B MgO | 1.25 | 1.0 | | | | |
| B $Na_2O$ | .10 | .6 | | | | |
| B $K_2O$ | .74 | .3 | | | | |
| A $TiO_2$ | | 1.5 | | | | |
| $P_2O_5$ | | | | | | |
| $SO_3$ | 7.12 | 23.3 | | | | |
| B/A Ratio | 1.769 | 3.619 | | | | |
| $Fe_2O_3$/CaO Ratio | .0682 | .0630 | | | | |
| Chloride | | | | | | |

FOSTER WHEELER CORPORATION

Figure 4.7-5

# SUMMARY PERFORMANCE SHEET

Purchaser: Empresa Nacional de Electricidad S.A.
Contract No.: 2-79-2515/16/17
Location: Teruel, Spain
Date: January 1979
Design pressure: 2400/569 psig
Dwg. No.: 79-2515-6-20

| Fuel | COAL | COAL | COAL-NATGAS |
|---|---|---|---|
| Load | 50% | 100% | 75-25% |
| Steam M lb hr | 1201.8 | 2203.5 | 2203.5 |
| Pressure superheater outlet psi | 2400 | 2400 | 2400 |
| Temperature steam superheater outlet F | 980 | 1004 | 1004 |
| Pressure Boiler Drum psi | 2444 | 2575 | 2575 |
| Reheat steam M lb hr | 1059 | 2117 | 2117 |
| Temperature steam entering reheater F | 554 | 662 | 662 |
| Temperature steam leaving reheater F | 900 | 1004 | 1004 |
| Pressure steam entering reheater psi | 284 | 597 | 597 |
| Pressure steam leaving reheater psi | 270 | 569 | 569 |
| Elevation above mean sea level | 1970 | 1970 | 1970 |
| Temp feed entering unit F | 417 | 489 | 489 |
| Temp feed leaving econ. F | 483 | 572 | 570 |
| Temp air entering unit F | 59 | 59 | 59 |
| Temp air leaving air heater (SEC/PRI) F | 487/575 | 590/690 | 570/635 |
| Temp gas leaving furnace F | 1460 | 1812 | 1810 |
| Temp gas leaving boiler F | | | |
| Temp gas leaving economizer F | 600 | 770 | 766 |
| Temp gas leaving air heater F | 275 | 320 | 335 |
| Ditto corrected for leakage F | 257 | 300 | 315 |
| Excess air leaving % | 25 | 25 | 25 |
| Wet gas entering air heater M lb/hr | 1832 | 3515 | 3469 |
| Wet gas leaving air heater M lb/hr | 1970 | 3677 | 3640 |
| Air entering air heater M lb/hr | 1775 | 3302 | 3331 |
| Air leaving air heater M lb/hr | 1637 | 3140 | 3160 |
| Draft in furnace in. $H_2O$ | 0.1 | 0.1 | 0.1 |
| Gas side loss thru boiler in. " | - | - | - |
| Gas side loss thru suphtr. & rehtr in. " | 2 | 3.5 | 3.4 |
| Gas loss thru economizer in. " | - | - | - |
| Gas side loss thru airheater in. " | 1.22 | 3.62 | 5.31 |
| Gas side loss thru flues in. " | 1.55 | 6.18 | 6.00 |
| Gas side loss thru dust collector in. " | 0.15 | 0.5 | 0.49 |
| Total Gas Side Loss | 5.02 | 13.9 | 15.30 |
| Air side loss thru air heater in. $H_2O$ | 1.26 | 4.45 | 5.43 |
| Air side loss thru ducts in. " | 0.7 | 2.8 | 3.20 |
| Air side loss thru burners in. " | 2.6 | 4.5 | 6.20 |
| Air side loss, Measuring Device in. " | 0.25 | 1 | 1.14 |
| Air side loss, Steam Coil in. " | 0.3 | 1.2 | 1.36 |
| Total Air Side Loss | 5.11 | 13.95 | 17.33 |
| Air & gas loss total in. $H_2O$ | 10.13 | 27.85 | 32.63 |
| Pressure loss Eco. In to Drum psi | 43 | 67 | 67 |
| Fuel burned Coal/Nat. Gas M lb hr/cfm | 249 | 472.8 | 357.5/12900 |
| Liberation, total vol. Btu hr x cu ft | 6,045 | 11,474 | 11,570 |
| Furn. cooling Factor net, Btu hr x sq. ft. | 32,409 | 61,513 | 62,000 |
| Input per plan area MM/hrxsq. ft. | 0.9 | 1.7 | 1.7 |
| Heat Losses: Dry gas % | 5.19 | 6.22 | 6.27 |
| Hydrogen and moisture in fuel % | 7.36 | 7.29 | 8.64 |
| Moisture in air % | 0.12 | 0.15 | 0.15 |
| Unburned combustible % | 0.5 | 0.5 | 0.5 |
| Radiation % | 0.35 | 0.18 | 0.18 |
| Unaccounted for and mfrs. margin % | 1.5 | 1.5 | 1.5 |
| Total losses % | 15.52 | 16.54 | 17.24 |
| Efficiency % | 84.48 | 83.46 | 82.76 |

Each unit will include the following

| | | |
|---|---|---|
| Convection surface | 4,905 | sq ft |
| Walls in furnace | 27,660 | sq ft |
| Radiant superheater | 24,811 | sq ft |
| Convection superheater | 56,874 | sq ft |
| Reheater | 90,844 | sq ft |
| Reheater II | — | sq ft |
| Economizer | 59,800 | sq ft |
| Air heater Primary | 139,600 | sq ft |
| Air heater Secondary | 264,400 | sq ft |
| Total furnace volume | 290,314 | cu ft |
| Total furnace surface | 54,151 | sq ft |
| Firing equipment (6) | MB-23 Mills | |

Superheat control by: Spray

Performance based on fuel specified below:

**SOLID**

Kind: Sub-Bituminous Coal
Grindability: 60
Size 1 1/4 Max moisture

Proax. Analysis Per Cent:
- Moisture 23.3
- Volatile matter 27
- Fixed carbon 29.5
- Ash 19.7

Fusion temp. of ash 2732-2192

**LIQUID**

Kind
Gravity API
Req'd viscosity at burner
Oil press. at burner
Oil temp. at burner
Steam press. at burner

**GASEOUS**

Kind
Sp gr relative to air
Gas pr at burner in Hg
Gas temp at burner F

**ULTIMATE ANALYSIS**

Fuel: Sub-Bituminous Coal/Nat. Gas

| Per cent by | Weight | Volume |
|---|---|---|
| Ash | 19.81 | |
| S | 5.33 | |
| $H_2$ | 2.67 | |
| C | 38.36 | |
| $CH_4$ | | 91.13 |
| $C_2H_4$ | | 5.85 |
| $C_3H_8$ | | 1.50 |
| $C_4H_{10}$ | | 0.61 |
| $C_5H_{12}$ | | [illegible] |
| CO | | |
| $H_2O$ | 33.3 | |
| $N_2$ | | 0.8 |
| $O_2 + N_2$ | 9.53 | |

Btu lb dry: as fired 7047 23,251
Btu cu ft at 60 F-30 in Hg 1085 (Nat. Gas)

Steam Temp. Control Range From ... To ... Guarantee Point ...

Figure 4.7-6

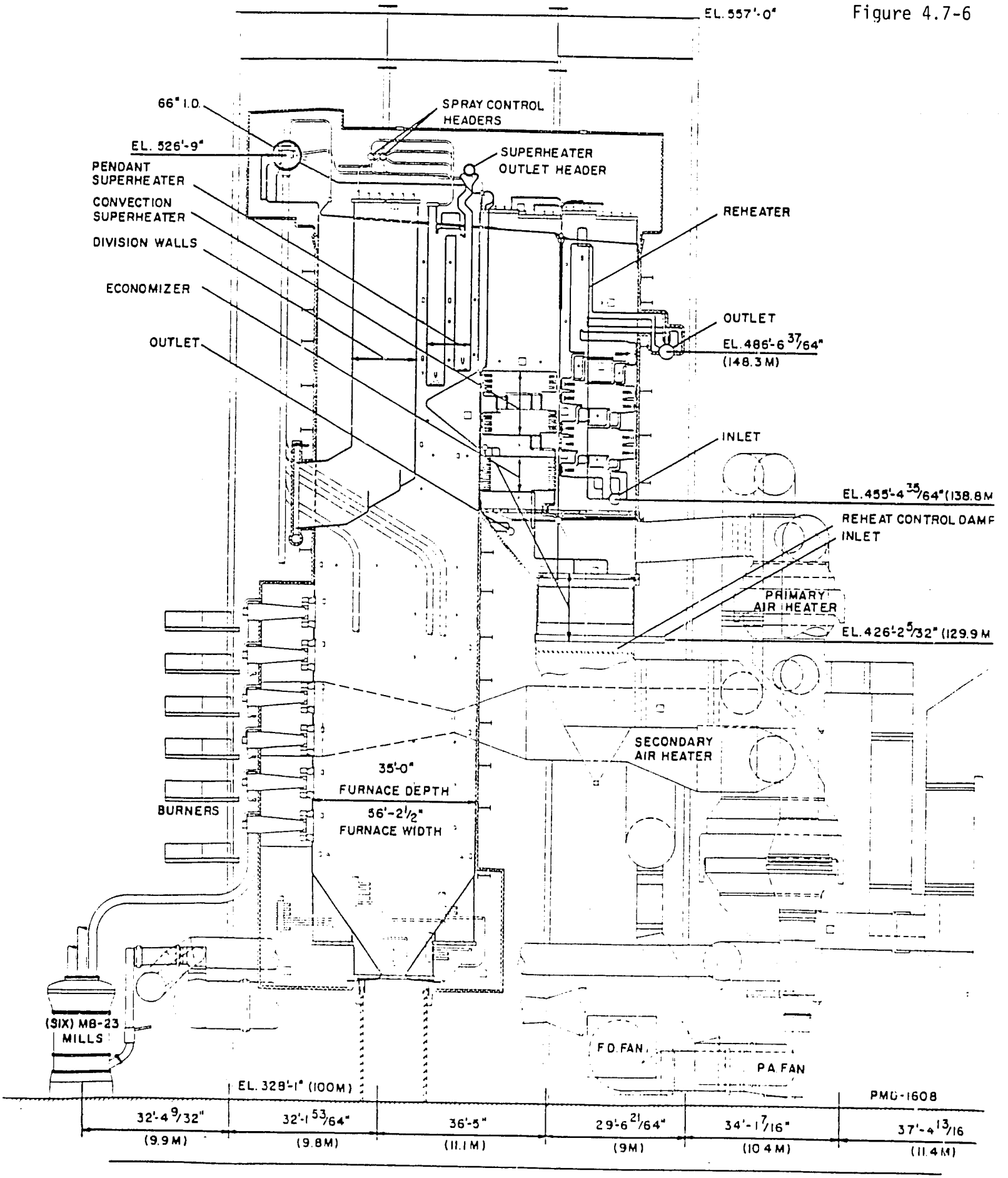


Name Teruel Power Plants I, II & III
Location Andorra, Teruel, Spain
No. of Units 3 Contract No. 2-79-2515/16/17 Date January 1979

Design Pressure 2400/569
Final Steam Temperature 1004/1004 F
Capacity 2403.5 klb/hr Type Reheat

EQUIPMENT DIVISION

# FIRING EQUIPMENT
# COAL FUEL ANALYSIS

SECT ____ SEQ ____
CLASS CI PAGE 1.2
REV 1 DATE 1/14/7

Figure 4.7-7

CUSTOMER: TERUEL-ENDESA
ISSUED BY: J. A. GARCIA MALLOL
CONTRACT NO. 2-79-2515/16/17
RETURN MASTER TO: C. A. FISK

| CONSTITUENT | FUEL TYPE: BOILER PERFORMANCE FUEL | PULVERIZER DESIGN FUEL | RANGE OF FUELS | |
|---|---|---|---|---|
| Surface Moisture % By WT. | 15.55 | 12.35 | 11.4 - 16.2 | |
| Inherent Moisture % By WT. | 8.25 | 8.25 | 7.6 - 10.8 | |
| Proximate Analysis % By WT. | | | | |
| Fixed Carbon | 29.5 | 24.1 | 24. - 34. | |
| Volatile Matter | 27. | 24.3 | 19. - 32. | |
| Ash | 19.7. | 31. | 10. - 31. | |
| Moisture | 23.8 | 20.6 | 19 - 27. | |
| TOTAL | 100. | 100. | | |
| Ultimate Analysis % By WT. | | | | |
| Carbon | 38.86 | | | |
| Hydrogen | 2.67 | | | |
| Oxygen } | 9.53 | | | |
| Nitrogen } | 0.11 | | | |
| Sulfur | 5.33 | | | |
| Ash | 19.81 | | | |
| Moisture | 23.8 | | | |
| TOTAL | 100. | | | |
| HHV, BTU/LB As Received | 7047. | 5614. | 5580 - 8280 | |
| Grindability, Hardgrove | 60 | | | |
| Reactivity T15 °C. | | | | |
| As Rec'd. Sizing (Sq. Hole, Rd. Hole) | 1¼" | | | |
| Screen Size / % Through | | | | |
| Screen Size/ % Through | | | | |
| Screen Size/ % Through | | | | |
| Mineral Analysis Of Ash | | | | MEDIU |
| $FeO_3$ | | | 8. - 39. | 20.72 |
| $Na_2O$ | | | 0.06 - 0.25 | 0.15 |
| $K_2O$ | | | 0.5 - 2.3 | 1.42 |
| CaO | | | 0.5 - 18. | 8.2 |
| MgO | | | 0.5 - 2.5 | 1.4 |
| $SiO_2$ | | | 10. - 55. | 30.3 |
| $Al_2O_3$ | | | 3. - 23. | 13.5 |
| $TiO_2$ | | | | |
| $SO_3$ | | | | |
| Chlorides | | | | |
| Undetermined | | | | |
| Fusion Temp. Of Ash | | | | |
| Initial Deformation ~~Red~~/OX. | | | 1832 - 2282 | |
| Softening (H=W) ~~Red~~/OX. | | | 2197 - 2732 | |
| Softening (H=½W) ~~Red~~/OX. | | | 2210 - 2741 | |
| Fluid ~~Red~~/OX. | | | 2310 - 2316 | |

FORM CI-30-1.2
ISSUED 8/16/71

| REV.NO. | DATE | BY | IDENT. | DESCRIPTION | REMARKS |
|---|---|---|---|---|---|
| 0 | 12/13/74 | | | | |
| 1 | 1/14/75 | C.H. | F.E. | ADD SURFACE MOISTURE & INHERENT MOISTURE | |

Empresa Nacional de Electricidad, S.A.
(ENDESA)

Velázquez, 132 - Madrid - 6
Apart. 994-Tel. (91) 261 63 00
Telegramas: ENDESAMAD
Telex: 22.917 ENE

Figure 4.7-8

FOSTER WHEELER ENERGY CORP.
110 South Orange Avenue
LIVINGSTON, N.J. 07039
EEUU

- At. Mr. Hellersperk -

S/ref.: Su escrito: N/ref.: RGZ/cd. TER-227 Fecha: 27 Nov. 79

Asunto: Análisis de cenizas de lignitos de la C. T. Teruel.

Muy Sres. nuestros:

Como complemento a los "análisis de carbones para estudiar el comportamiento de caldera" que entregamos en mano al Sr. Tapia el 25 de Junio de 1979 y que obran en su poder, transcribimos los análisis de cenizas correspondientes a esos carbones para su consideración en el indicado estudio:

| | Muestra SANCA 22.3/23.4 | Muestra Oportuna 27.3/25.4 | Muestra teórica Oportuna 25.679 |
|---|---|---|---|
| $Na_2O$ | 0,15 | 0,11 | 0,12 |
| $K_2O$ | 2,05 | 1,18 | 1,36 |
| $SiO_2$ | 52,09 | 48,03 | 51,85 |
| $Al_2O_3$ | 26,45 | 23,15 | 22,00 |
| $Fe_2O_3$ | 13,40 | 15,30 | 14,05 |
| CaO | 2,69 | 5,66 | 5,19 |
| MgO | 0,48 | 0,69 | 0,36 |
| $SO_3$ | 2,18 | 5,36 | 4,08 |
| $P_2O_5$ | 0,22 | 0,18 | 0,40 |
| $TiO_2$ | 0,67 | 0,76 | 0,67 |
| | 100,38 | 100,42 | 100,08 |

P | CO | DF | SF | ENDESA-MADRID | 28.NOV.79 16812 | SALIDA | OC | E | O | MC | OP

Atentamente

cc: ST
GVFW (M)
GVFW (B)

## 5.0 POWER PLANT DESIGN CHARACTERISTICS

### 5.1 GENERAL

Chapter 5 of the Lakhra Power Project Feasibility Study has been written to qualify and quantify the details of the plant design on a site by site and system by system basis. Certain features of the plant design are dependent on the plant location and vary from site to site. These features are discussed in the area of site surveys and site plans. The projected environmental guidelines which will be imposed on the Lakhra Plant are discussed in Section 5.4. The development of plant designs has been made assuming the imposition of these guidelines. The basis of design analyses (BODA) provides details regarding the physical layouts of the plant, sizing and arrangement of equipment, the descriptions on a conceptual level of all plant systems and sample specifications which are appropriate for this unit. The development of the plant and system designs in this level of detail has provided the input for the detailed cost estimates which are included in Chapter 8 and demonstrates the technical feasibility of designing a unit fired with Lakhra coal in the Sind Province of Pakistan.

This section also discusses subjects which are considered to be important in demonstrating the ability of this design to address concerns raised regarding the environmental controls that will be required to meet guidelines imposed on the plant, the projected availability and reliability of the unit burning Lakhra coal and the flexibility of the plant to accommodate fuels other than indigenous Lakhra lignite.

### 5.2 SITE SURVEYS

Physical surveys of the potential power plant sites were conducted as a part of the power plant feasibility study to define any characteristics among the sites which would have either a distinct advantage or a detriment to the development of the power plant project. Figure 5.2-1 shows a map of the investigated area which runs from Hyderabad north along the Indus River to the village of Khanot and west to the Lakhra coal field area. The areas that were investigated for potential sites in this study were Jamshoro, Khanot and Lakhra. These three areas had been defined by earlier studies. In the initial portion of the work for this study, the areas defined above were further investigated to determine final site locations.

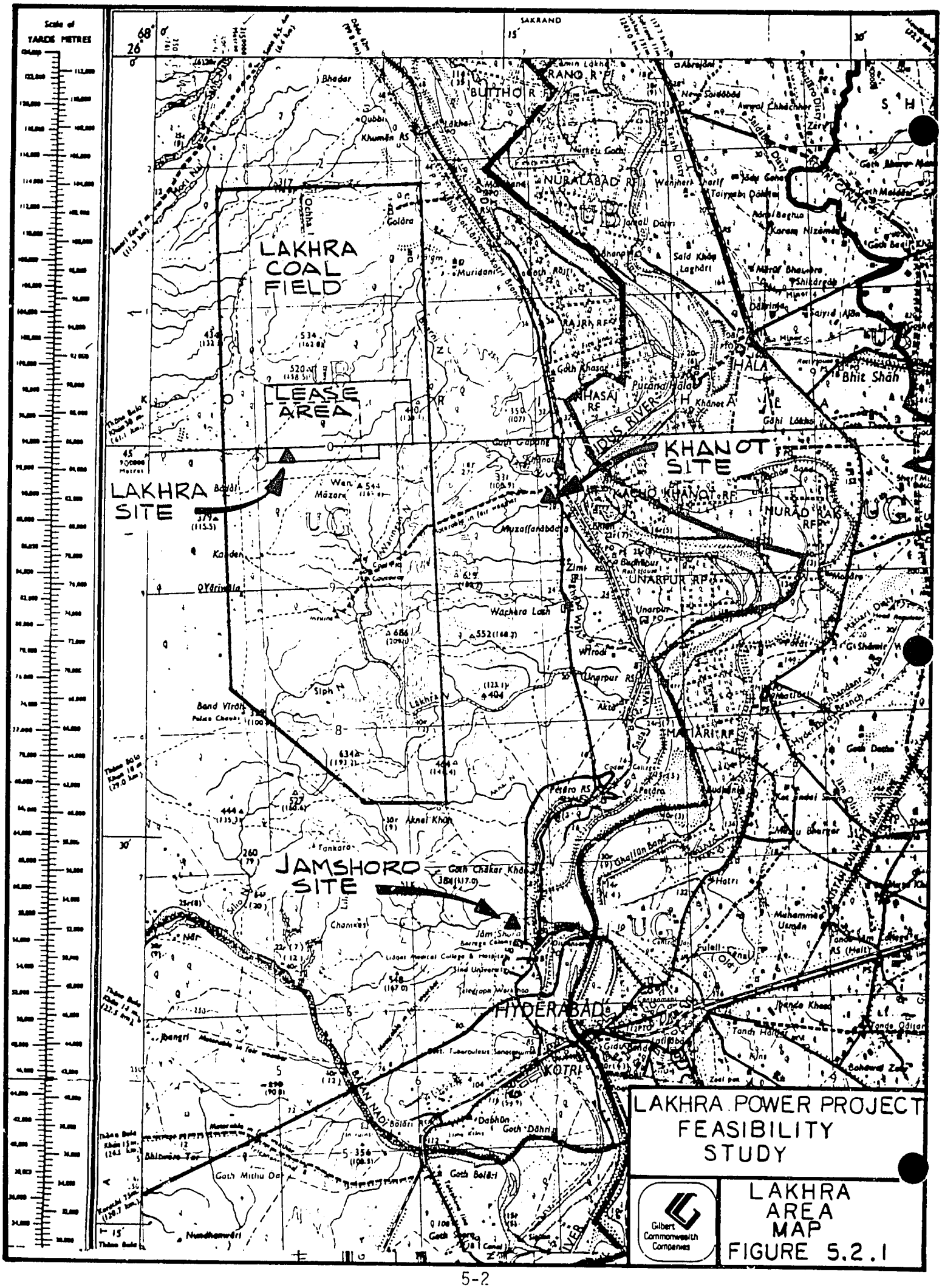
LAKHRA COAL FIELD
LEASE AREA
LAKHRA SITE
KHANOT SITE
JAMSHORO SITE
HYDERABAD
KOTRI
INDUS RIVER
NURALABAD RF
KACHO KHANOT RF
NURAD LAKO RF
UNARPUR RF
MATARI RF
Scale of YARDS METRES
LAKHRA POWER PROJECT FEASIBILITY STUDY
Gilbert Commonwealth Companies
LAKHRA AREA MAP
FIGURE 5.2.1

The centerline coordinates of the three sites in accordance with the Pakistan metric grid system are as follows:

Jamshoro - North 868,320, East 2,167,300
Khanot - North 896,120, East 2,170,700
Lakhra - North 899,800, East 2,152,100

As the area map shows, the Jamshoro site is the closest to the city of Hyderabad, lying about 8 kilometers north and 10 kilometers west of the city. The Khanot site is 27.8 kilometers north of Jamshoro and 3.4 kilometers east. The Lakhra site is 31.5 kilometers north and 15.2 kilometers west of the Jamshoro site.

Information was gathered in the areas of site topographic mapping, soils investigations and ground water surveys to provide sufficient background information to support site and system layout efforts. The work conducted in these areas is discussed in the remaining paragraphs of this section.

Initial information gathering efforts were made at all three sites. During the course of the study, however, the work being developed by both the J. T. Boyd Co. and GCII indicated that the combination of high coal transportation costs and environmental sensitivity of the Jamshoro site limited its viability as a competitive site. As a result, final layout and costing work for the study was limited to the Khanot and Lakhra sites. Discussion of the Jamshoro site in this section is intended to document the field investigations made. Detailed discussions of site layouts and the basis of design analysis are limited to the Khanot and Lakhra sites.

### 5.2.1 Ground Level Surveys

Site surveying of the Jamshoro site was conducted by WAPDA survey personnel in preparation for the development of the oil-fired units which will be built initially on this site. Copies of the topographic survey map were provided to GCII at the outset of the project. The detailed site topographic map covers an area of approximately 500 acres bounded on the north by the 500 kV substation and on the south by the WAPDA substation residential colony. The topographic map extends approximately 900 meters west and 300 meters east of the Dadu Road. An additional site map generated by WAPDA at a 1:8333 scale showing the area east to the Indus River and south to the Jamshoro intersection was also used in the development of preliminary site layouts. As the topographic maps show, the Jamshoro site is a generally level site with a slight ridge to the west and a gentle decline into the floodplain area east of the Dadu Road. The preliminary layouts indicated adequate

space for a new coal-fired plant development of up to four units.

The topographic information for the Khanot site also was generated by WAPDA personnel. These topographic maps were developed at a 1:5000 scale at 2 meter contour intervals. These cover an area from approximately 2 kilometers west of the Dadu Road to the Indus River on the east and are bounded on the north by the village of Khanot and on the south by the village of Mazurabad. Based on the topography of the area around Khanot, the final site location for this alternate was selected in the flat area bounded on the east by the Dadu Road and on the north by the Lakhra Road. This area is approximately 3 kilometers south of the existing Khanot substation. This area offers a generally level site at a minimum distance above the river level for pumping of plant makeup water requirements. Topography for this site based on the maps generated by WAPDA is shown on Figures 5.3-1 and 5.3-2 (Volume VII).

The site topographic work done for the Lakhra site was generated by the Survey of Pakistan in support of both the mine and power plant feasibility efforts. Topographic maps were developed at a 1:5000 scale at 2 meter contour intervals. The final site for the Lakhra mine mouth alternate was picked in cooperation with the J. T. Boyd Company and accommodates their plans for mining area and mine surface facilities development. The power plant site is on a flat region of the southcentral lease area which is barren of coal. For the Lakhra site, generally there is very little topography within two square kilometers of the site. Information from the site topographic maps has been incorporated into the Lakhra site plans which are shown on Figures 5.3-3 and 5.3-4 (Volume VII).

### 5.2.2 Soils Investigations

Soils investigations conducted by GCII for the Jamshoro site consisted of two confirmation borings which were drilled to provide information to supplement soils investigation work being conducted for the development of the oil-fired unit at Jamshoro. The boring logs and soils investigation report for 45 holes drilled in the oil-fired unit investigation have been made available to GCII for work on the coal-fired unit layouts on the Jamshoro site. The confirmatory borings were placed at the boiler room centerline of the first Jamshoro coal-fired unit and at the turbine centerline of a potential second coal-fired unit. These borings are identified as JC-1 and JC-2. They are discussed in Section 5.5.2 of this report. Boring JC-1 was bored to a depth of 10 meters, and JC-2 was drilled to a depth of 25 meters. At the Khanot site a total of 13 borings were drilled; 7 borings were drilled on a grid pattern



452

within the main area of the site and served as information borings to identify general site subsurface conditions and assist with the planning of the main borings. These borings are labeled as KI-1 through KI-7. Main borings labeled as KM-1 through KM-6 were drilled in areas of the site where specific load concentrations such as boiler room and turbine room areas and the chimney loadings will occur.

Two confirmatory borings were drilled at the Lakhra site to expand upon information made available by the results of the J. T. Boyd coal exploration program. These borings are labeled as LC-1 and LC-2. Boring LC-1 was placed at the projected centerline of the mine surface facilities development as defined by the J. T. Boyd Company. LC-2 was drilled at the centerline of the power plant site.

### 5.2.3 Ground Water Surveys

The GCII soils drilling program provided the opportunity to observe the intrusion of ground water into borings at all three of the power plant sites. The presence of the borings also allowed for sample collection of any site ground water encountered. In addition, the area to the east of the Khanot site between the Dadu Road and the Indus River was the subject of a ground water resistivity survey conducted by WAPDA in June, 1985. Water samples were collected from the Indus River, borings at Khanot and from J. T. Boyd borings at the Lakhra site to further characterize ground water available for use by the power plant and the mine. The results of the ground water surveys are discussed in Section 5.5.2 of this report.

## 5.3 SITE PLANS

Final site plans were developed for both the Khanot and Lakhra sites to show the potential locations of all significant structures and equipment including: boiler and turbine rooms, coal delivery and storage, circulating water system, transmission lines and substation, ash and or FGD sludge disposal areas, water treatment and disposal systems and site access by road and rail. Space requirements for the residential colony and proximity of the colony to other on-site structures is also shown. The site plans that were generated for this study show the topographic and site survey work that is discussed above in Section 5.2 in background form. The site plans are included in Volume VII of this report as Figures 5.3-1 through 5.3-4. Drawings at 1:2000 and 1:5000 scale were generated for each site. The remainder of this section will discuss relevant factors and decisions that are made in determining the layout for each site.

### 5.3.1 Khanot Site

The layout of the Khanot site is shown on Figures 5.3-1 and 5.3-2 in Volume VII. The Khanot site area is presently undeveloped and as such provides good flexibility for the efficient arrangement of equipment and structures. The only potentially interfering existing features of the Khanot site are the small truck stop which is on the north side of the Lakhra Road adjacent to the Dadu Road, the 132 kV transmission line which runs from south to north along the east side of the site and the village of Mazurabad which is approximately 1.5 kilometers southeast of the site. As the site layout shows, the Khanot site is on a relatively flat area of land which is bordered on the north by a line of ridges north of the Lakhra Road and on the south by a low drainage area which drains the area to the south and west of the plant to the Indus River. Some filling and rearrangement of existing drainage profiles will be required at this site; however, it is anticipated that this work will be minimal. Results of the soils investigation show that power block equipment and structures may be founded on shallow mat type foundations. The orientation of the power block area for Khanot was determined to provide for future plant expansion in the direction of site access to avoid interferences between future expansion and operating units. This orientation also allows for good access from the coal delivery system plan for Khanot which will be coming from the northwest.

The delivery of coal to the plant at Khanot will be via short haul rail with a loop track located adjacent to the plant site. The conveying and storage area designated for this site is on

a flat lands area immediately to the north of the Lakhra Road. The lack of any interfering existing structures in this area means that the layout of the storage and handling system may be optimized using minimum conveying lengths. The basic unloading and conveying equipment is designed to load out the train-delivered coal to either active storage in silos, compacted dead storage in open piles, or directly to the plant. The active storage silos are intended to provide 4 days of covered storage which will minimize dusting, degradation and rehandling. Silos will also provide a first in/first out inventory, which is very important in handling lignite. To avoid interference with road crossings, the plant supply conveyor is routed underground to a point just south of the Lakhra Road where it begins its climb to the in-plant bunkers for Unit 1.

Should $SO_2$ scrubbing be required at the Khanot site, limestone deliveries can be accommodated on the same short haul rail system. The limestone would be dumped and routed to the transfer house using the same equipment that is planned for handling of coal. From the transfer house, limestone will be forwarded to active storage silos using a separate system. From the active storage silos to the limestone preparation area, the material is conveyed mechanically on an independent system. From the preparation area to the scrubber area, the limestone is conveyed pneumatically.

Further discussions of the coal handling system operation, storage capacities and conveying rates are presented in System Description No. XX included in Section 5.5.4. The system description for the potential limestone unloading, storage and preparation system is included under System No. XIV of the same section.

The circulating water system laid out for the Khanot site has been optimized to arrange cooling towers and pumphouses in a fashion which uses the minimum site space and also orients the towers to minimize the effect from fogging and plume drift. The towers are located as close as feasible to the condensers to minimize circulating water pipe runs and are situated on the southeast corner of the site. In this location, summertime winds from the southwest and wintertime winds from the north will carry the cooling tower plumes away from site equipment and structures such as the switchyard, residential community and power block. The Khanot site also offers the opportunity to construct the towers in pairs, which minimizes site space requirements.

Water supply to the site is from a makeup water pump house located on the west bank of the Indus River approximately 3 kilometers east of the site. The location of the pumphouse

is close to an existing barge-mounted irrigation pumping station. The river at this point is a minimum of 15 feet in depth close to the shore, which will facilitate the construction of a shoreline pump house with a small forebay and stilling area in front of the pump house. A set of clarifying ponds have been provided to remove some of the suspended solids from the river water prior to the water being forwarded to the treatment area located on-site. These ponds will also allow for a short-term two-day supply of makeup water for both units should an unexpected outage of the makeup water pumps or extreme low water conditions occur. The water treatment area for Khanot is on the south section of the site adjacent to the cooling towers and from this location can provide makeup water, service water for the plant and potable water to the residential community with a minimum of piping runs.

The transmission lines for the unit at Khanot will run from the plant southwest to an adjacent switchyard area and then directly west approximately 3 kilometers to the existing 500 kV transmission line. The development of the switchyard area and the interconnection of the plant to the National Grid are discussed in Section 3.2.

As with all of the sites, the topography within a 5 kilometer radius of the plant was investigated to determine if a naturally occurring area for ash storage is available. At the Khanot site it appears that there is an area approximately 2.8 kilometers north-northwest of this site which can be closed off by the construction of an earth dam and used for disposal. This area is shown with appropriate match lines on the 1:5000 scale drawing. A naturally occurring area for the disposal of ash will minimize costs of diking construction. However, this area will still require grading and sealing with an asphalt surface material due to its proximity to the village of Khanot and the Indus River. The ash water recirculation pump house will be located to the east of the disposal area. The disposal of bottom ash will be immediately to the north of the plant site along the route of the ash disposal lines. This will allow minimum pipe runs and easy access to the bottom ash area for removal of saleable ash. Should bottom ash be generated by the plant in excess of that which can be sold or used as road fill on-site and in the area, overflows of bottom ash can be routed to the fly ash ponds.

Wastewater disposal will be divided with sanitary waste effluents being routed to the fly ash ponds, and industrial wastes such as boiler chemical cleaning, demineralizer recharge flows and plant oily wastes will be collected and routed to a set of evaporation ponds on the south edge of the plant site.

Access to the Khanot site is relatively simple. The Dadu and Lakhra Roads are both paved, good quality roads. Access to the site will be from the Lakhra Road with only road development or immediate on-site access being required. The existing rail line from Hyderabad and Dadu is approximately 1 kilometer east of the site and, as shown on the layout drawings, two rail sidings can be run to the plant. One of the sidings will be for construction track and will enter the site along the centerline of the boilers. The second siding will be a turbine room maintenance track.

### 5.3.2 Lakhra Site

The layout of the Lakhra site is shown on Figures 5.3-3 and 5.3-4 in Volume VII. The designated power plant area for the Lakhra mine mouth site is on the south-central edge of the lease area which has been determined by the J. T. Boyd Company to be barren of mineable reserves. The area is also approximately 1 kilometer south of the mine surface facilities planned by Boyd. The area is completely undeveloped and extremely flat in profile. As a result, layout of equipment and structures on this site is completely unrestrained. Boring No. LC-2, which was done as a part of the GCII soils investigation program, indicates that foundations for a plant in this region of the Lakhra lease area will be founded on soils conditions similar to those encountered at Khanot and Jamshoro. Shallow mat type foundations will be suitable for the Lakhra site. The orientation of the basic power block, air quality control and circulating water equipment at Lakhra will be essentially the same as was used at the Khanot site.

The coal handling system planned for the Lakhra mine mouth site will be the same as the Khanot site in regard to short-term active storage and conveying equipment. The major difference in the coal handling system at this site will be that no delivery and unloading system is required. The interface between power plant coal handling and the mine will be an overland delivery conveyor which terminates in transfer house #1 on-site. The costs of this conveyor are included in the scope of J. T. Boyd work.

The circulating water system for the Lakhra site will place cooling towers to the southeast of the main power block as was done at Khanot to minimize the effects of plume drift. The makeup water system which supplies circulating water system makeup plus balance of plant and residential colony requirements will be installed in the same location along the Indus River as was used for the Khanot site. Supply of water to the Lakhra site will require pumping system approximately 20 kilometers in length. This piping will enter the Lakhra site from the

east and terminate in the water treatment area located adjacent to the cooling towers on the south edge of the site.

The substation planned for the Lakhra site will be located southwest of the main power block development. Transmission lines from this area will be extended approximately 17 kilometers east to the 500 kV transmission lines. More detailed discussion of transmission requirements on the Lakhra site is included in Section 3.2.

As with the other sites, an investigation of available topography within 5 kilometers of the central power plant site was conducted to locate any available land which may be used for disposal of fly ash. Although some areas of the eastern reserve area would lend themselves to the development of ash storage facilities, these areas are currently planned for open pit mine development by J. T. Boyd. As a result, the Lakhra site has been laid out to accommodate ash storage ponds to the southeast of the primary site development. The pond development at the Lakhra site is sized to allow an initial 5-year storage of fly ash, bottom ash and FGD sludge if required. After 5 years of plant and mine operation, it is assumed that adequate mined out area from strip mining operations will be available to use future ash generated from the plant as fill material for the mine reclamation program. No lining for the storage ponds at the Lakhra site has been included due to the lack of usable ground water in the area. As with the Khanot site, industrial wastes are routed to a set of evaporation ponds on the north edge of the pond development. Sanitary wastes will be routed to the ash ponds. The required storage area for potential FGD sludge generated from an $SO_2$ scrubbing system is shown on the site plans. A 5-year storage of scrubber sludge approximately doubles the total storage area required.

The development of proper access to the Lakhra site will be the most difficult of the three sites under consideration. Good quality paved roads will have to be extended to the Lakhra plant site area from the existing Lakhra Road. For the Lakhra site, major equipment will have to be moved from the Khanot area to the site by road in order to avoid the cost of a 22 kilometer rail line which would be used only during the plant construction period.

## 5.4 ENVIRONMENTAL GUIDELINES

### 5.4.1 Introduction

The environmental guidelines developed for this feasibility study are provided in the following subsections. Air emissions, wastewater treatment and disposal, solid waste disposal, and noise control are among the more prominent environmental concerns related to the proposed Lakhra Power Plant (2 x 350 MW) that are addressed, but other environmental concerns are also included. These guidelines were developed primarily to serve as criteria for the evaluation of alternative pollution control systems and other environmentally-sensitive design and operating features of the plant, and selection of preferred alternatives, to the extent such activities are undertaken in the feasibility stage. However, the guidelines are also intended to facilitate coordination with environmental assessment activities performed under separate contract. The guidelines may also provide appropriate input to the development of detailed design criteria for the plant and ancillary facilities if overall project feasibility is demonstrated.

The advisability of providing these guidelines at this stage is indicated by the potential for substantial adverse environmental effects generic to a large power plant installation, and the impact on technical feasibility and economic costs of providing the environmental controls necessary to reduce this potential to acceptable levels. Within the specified scope of this feasibility investigation (USAID, 1984), these guidelines provide criteria for the analysis of environmental control technologies (Section 5.5.6) and incorporating other environmentally-sensitive design features as appropriate to meet environmental concerns of USAID, GOP, and the World Bank and other donor agencies.

In the absence of environmental standards in Pakistan, the guidelines were selected upon review of pertinent environmental guidelines, regulations, and/or standards of the World Bank (1984a, 1984b), the U.S. EPA, selected members of the European Economic Community, USAID (22 CFR 216), and other agencies. The primary basis for selection was that use of the guidelines provide a level of environmental protection appropriate to meet environmental concerns of the above-mentioned parties, yet be sensitive to the technical, economic and infrastructural capabilities of Pakistan.

Many of the guidelines provided below give general guidance only at this feasibility stage. However, those guidelines reflecting World Bank Environmental Guidelines and World Bank Occupational, Health and Safety Guidelines were espoused as

relatively strict criteria in view of the World Bank's position as a primary potential lender for the project, and the World Bank's general application of these guidelines as standards except in unusual circumstances.

Sufficient data and/or analyses, such as those to be developed by other contractors, were not in all cases available to the feasibility study to quantitatively predict the degree of compliance with these guidelines. Technical judgments, general industry experience, and study outputs in the form of contingency modules were employed as appropriate in such instances.

### 5.4.2 Air Quality Controls

#### 5.4.2.1 Emissions of Concern

Guidelines were adopted for evaluation and selection of control technologies for sulfur dioxide ($SO_2$), nitrogen oxides ($NO_x$), and particulates (dust) in power plant stack emissions and for fugitive dust from various plant facilities (e.g., coal processing and transfer facilities; around fly ash silo). These power plant emissions are generally recognized as offering the greatest potential for deterioration of air quality, and practicable emission controls for these pollutants are available. Each of these parameters offers the potential for direct adverse effects on human health and welfare (e.g., crops and natural vegetation); $SO_2$ and $NO_x$ emissions from power plants are also implicated as important contributers to the acidification of precipitation.

#### 5.4.2.2 General Guidelines for Air Quality Control

Emission controls for particulate matter (dust), sulfur dioxide ($SO_2$), and nitrogen oxides ($NO_x$) shall be designed/applied with the objectives of:

a. Meeting applicable World Bank emission guidelines (current as of July 1984).

b. Maintaining ambient air quality within applicable World Bank ambient air guidelines (current as of July 1984) and World Bank Occupational Health and Safety Guidelines (current as of June 1984), considering present ambient air quality and emission sources and planned/potential emission sources that may co-exist with the two 350 MW Lakhra units, to include (as appropriate) proposed Lakhra mine, coal storage and handling facilities.

Basis:

In the absence of specific environmental guidelines and standards in Pakistan, and considering World Bank's role as a primary potential lender for this project, the World Bank Guidelines were considered an appropriate source of guidance in regards to air quality aspects of the proposed plant. These guidelines give an appropriate basis for establishing emission control requirements for the facility that would provide a substantial measure of protection to human health and welfare, yet the guidelines are sensitive to economic, logistic, and technical capabilities of developing countries such as Pakistan.

Since the Lakhra mine and the two 210-250 MW oil-fired Jamshoro units may represent significant potential sources of air emissions, it is necessary to consider these sources to establish emission control design and implementation plans for the two 350 MW Lakhra generating units that represent the most cost-effective means of meeting environmental guidelines established for the project.

5.4.2.3 Stack Height Guidelines

Stack height for the proposed Lakhra units shall be in general conformance with Good Engineering Practice (GEP) stack height. For purposes of this project, GEP stack height (measured from ground-level elevation at the base of the stack) is assumed to be the greater of:

a. 65 meters (213 feet),

b. 2.5 H, or

c. Where engineering judgment, on the basis of meteorological data, terrain, and facility plans, indicates the need: Height demonstrated by a study approved by USAID which ensures that the emissions from the stack do not result in excessive concentrations of any air pollutant as a result of atmospheric downwash, wakes or eddy effects created by the source itself, structures or terrain obstacles.

Where:

H = Height of nearby structure(s) measured from the ground-level elevation at the base of the stack.

"Excessive Concentrations" = Maximum concentration judged to be at least 40 percent in excess of the maximum concentration experienced in the absence of such downwash, wakes or eddy effects.

"Nearby" = Up to five times the height of the structure but not greater than 0.8 kilometer (0.5 mile).

Basis:

The above guideline generally produces the range of stack heights considered "Good Engineering Practice (GEP), Stack Height" as currently defined by the U.S. EPA (40 CFR 51.1ff-mm added by 47 FR 5868). However, in recognition of the economic and developmental status of Pakistan and particular needs of this project, this guideline is more lenient than that required for new sources in the USA in that:

a. U.S. EPA now recognizes GEP stack height of 2.5 H only for permitted stacks in existence on or prior to January 12, 1979. However, credit for stacks up to 2.5 times the height of the facility it served was permitted by U.S. EPA in the period February 18, 1976 - January 12, 1979 (47 FR 5866). The current, refined U.S. EPA formula for new facilities is: GEP Stack Height = H+1.5L, where L is the lesser of height or projected width of a nearby structure (47 FR 5868).

b. Option c. above has been modified from the corresponding U.S. EPA wording (40 CFR 51.1ii), which requires a fluid model or field study approved by the reviewing agency. This option as written provides for greater use of engineering judgment and greater latitude in the type of study employed to make this determination.

The above guideline provides reasonable assurance of a stack height sufficient to adequately disperse stack emissions. The guideline also recognizes World Bank's recommendation that high stacks not be employed as a regular means of $SO_2$ emission control. The minimum stack height suggested by GCII for the Lakhra coal-fired boiler is 190 meters (623 feet), which is based on 2.5 times the heighth anticipated for the boiler tower.

In essence, item c. of the above guideline was used by SWEC (1983) as a minimum stack height criterion. No criterion was provided for maximum stack height in that study; however, World Bank Guidelines for $SO_2$ Emissions, which advises against using tall stacks for $SO_2$ emission control, were not issued until April 1984.

5.4.2.4 Sulfur Dioxide ($SO_2$) Stack Emission Guidelines

Stack emission controls and monitoring provisions for $SO_2$ shall be designed/applied with the objective of meeting the following guidelines (a.-d.), which reflect World Bank guidelines (Sulfur

Dioxide Emission Guidelines - April 1984; Sulfur Dioxide Ambient Levels Guidelines - April 1984; and Sulfur Dioxide Sampling and Analyses Guidelines - December 1982):

a. Maximum allowable $SO_2$ emission rates shall depend on background (ambient) $SO_2$ concentrations, and shall be the lesser of emission rates determined from Criterion I and Criterion II in Table 5.4-1. (NOTE: The emission limits derived from Table 5.4-1 are presumed to be applicable to each of the two 350 MW units considered as separate sources to be established sequentially. The $SO_2$ contribution from the second 350 MW unit and from other sources is assumed to be accounted for by ambient $SO_2$ concentrations as listed in Table 5.4-1 and as specified in item b. below.)

b. Except as may be permitted by criteria in Table 5.4-1, $SO_2$ emission rates should be maintained at levels sufficient to meet the following ground-level concentrations of $SO_2$ in ambient air:

<u>Inside Plant Fence</u>:

| | |
|---|---|
| Annual Arithmetic Mean: | 100 $mg/m^3$ (0.04 ppm) |
| Maximum 24-hr. Peak: | 1,000 $mg/m^3$ (0.38 ppm) |

<u>Outside Plant Fence</u>:

| | |
|---|---|
| Maximum 24-hour peak: | 500 $mg/m^3$ (0.19 ppm) |
| Annual Arithmetic Mean: | 100 $mg/m^3$ (0.04 ppm), |

with recognition that if environmental assessment indicates that $SO_2$ emissions under consideration would result in significant adverse effects on human health or welfare, these concentrations may be adjusted downwards.

c. To the extent practicable, plant layout and design should seek to minimize potential interaction of the emission plume from the plant with plumes from other nearby sources, either existing or planned.

d. Provisions shall be made for sampling and analysis of $SO_2$ in stack emissions according to World Bank $SO_2$ Sampling and Analyses Guidelines (December 1982), or equivalent methods, such that adherence to emission limits can be demonstrated.

Basis:

The guidelines selected for control of $SO_2$ stack emissions conform to current World Bank guidelines. These guidelines are designed to provide a substantial measure of protection to human health and welfare (including the natural environment) by imposing maximum allowable increments to ambient which is dependent on existing ambient conditions, and by discouraging the use of high stacks as an $SO_2$ control measure. They also acknowledge the desirable goals of maintaining flexibility for future industrial expansion by limiting atmospheric $SO_2$ loadings from any individual facility. However, in recognition of the economic and technological limitations of developing countries such as Pakistan, these guidelines are considerably less stringent than are considered reasonably attainable in many developed countries.

The above guidelines acknowledge that more stringent ground-level ambient $SO_2$ concentration limits, at least for sensitive receptors, could potentially be imposed (possibly affecting emission limits) based on environmental assessment. This acknowledgment is made in view of World Bank's indication that more stringent guidelines may be applicable in certain cases (e.g., to protect certain crops; see World Bank, 1984, p. 391). This acknowledgment is also made in recognition of the lack of baseline ambient data for potentially sensitive receptor locations, and present indications that the frequency distribution of wind directions in the project area is bimodal (northerly November-February; southwesterly April-September), potentially resulting in high chronic exposures that would not be detected using an annual averaging period. With exception of this acknowledgment, the ground-level ambient $SO_2$ guidelines cited above are identical to those used in the SWEC (1983) study. The World Bank criteria for $SO_2$ stack emissions, identified in item a. above, were promulgated after completion of the SWEC study.

5.4.2.5 Nitrogen Oxide ($NO_x$) Stack Emission Guidelines

Stack emission controls and monitoring provisions for $NO_x$ should be designed/applied with the objective of meeting the following guidelines (a.-d.) which reflect World Bank guidelines (Nitrogen Oxide Emissions Guidelines - November 1982; Nitrogen Oxide Sampling and Analysis - November 1982):

a. Plant emission levels of $NO_x$, prior to mixing with the atmosphere, should not exceed 260 ng/J (0.60 lb/$10^6$ Btu) of heat input (Lakhra lignite fuel assumed).

b. Plant emission levels of $NO_x$ should be maintained at levels sufficient to meet the following ground-level concentrations in ambient air:

Annual Arithmetic Mean (as $NO_2$): 100 mg/m$^3$ (0.05 ppm)

c. To the extent practicable, plant layout and design should seek to minimize potential interaction of the emission plume from the plant with plumes from other nearby sources, either existing or planned.

d. Provisions shall be made for sampling and analysis of $NO_x$ in stack emissions according to World Bank $NO_x$ Sampling and Analyses Guidelines (November 1982), or equivalent methods, such that adherence to emission limits can be demonstrated.

Basis:

The World Bank guidelines for $NO_x$ emissions (260 ng/J) and annual average ground-level ambient concentration (100 mg/m$^3$) are identical to U.S. EPA standards for new sources (40 CFR 60) and primary/secondary ambient air quality standards (40 CFR 50), respectively. The guidelines provide a substantial measure of protection to human health and welfare, and also recognize the desirability of limiting emissions in view of the role of $NO_x$ in the formation of harmful photochemical oxidants and acidic precipitation on a regional basis.

5.4.2.6 Particulate Stack Emission Guidelines

Stack emission controls and monitoring provisions for particulate matter shall be designed/applied with the objective of meeting the following guidelines (a.-c.) which are based on current World Bank guidelines (Dust Emissions General Pollution Guidelines - June 1983; Electrostatic Precipitator Guidelines - June 1983):

a. Particulate emissions should be limited to 100 mg/m$^3$ per unit (maximum).

b. Particulate emission controls should be designed/applied with the objective of maintaining ground-level ambient particulate levels within the following concentrations (exclusive of dust storm conditions):

24-hour maximum: 500 μg/m$^3$

Annual Geometric Mean: 100 μg/m$^3$

with recognition that if environmental assessment indicates that the dust under consideration would result in significant adverse effects on human health or welfare, the 24-hour maximum and annual mean concentrations could be adjusted downwards.

c. Provisions shall be made for appropriate sampling and analysis of particulates in stack emissions such that adherence to emission limits can be demonstrated.

Basis:

The guidelines selected for control of particulate stack emissions conform to current World Bank guidelines. These guidelines are designed to provide a substantial measure of protection to human health and welfare (including the natural environment), but also take into account available dust removal technologies, and the economic and logistical capabilities of developing countries such as Pakistan. As such, the guidelines for stack emissions and ambient air quality are less stringent than current standards in the USA.

The World Bank guidelines, under specified circumstances of low ground-level ambient dust concentrations, may permit a stack emission concentration of 150 $mg/m^3$. However, the limitation of 100 $mg/m^3$ was adopted for this study in view of the following considerations:

a. The 100 $mg/m^3$ limit is the World Bank's primary standard for dust emissions, and offers better protection of human health and welfare than the 150 $mg/m^3$ limit.

b. The increased removal efficiency required of controls applied to meet the more stringent limitation (approximately 99.3 percent versus 99.0 percent) imparts conservatism to the feasibility analysis from the standpoint of cost and probable conformance to appropriate guidelines for ground-level ambient concentrations, which can be finally determined only on the basis of plume dispersion modeling studies being performed under separate contract.

c. The 100 $mg/m^3$ limit offers substantially better protection of induced draft (ID) fans, considering the large quantities and high abrasion characteristics of ash from the Lakhra coal, thus resulting in positive benefits from the standpoint of fan maintenance and plant reliability.

d. If necessary, costs and design parameters for control equipment to effect the range of removal efficiencies likely to be ultimately required can be readily developed

in a contingency module such that an alternative to the 100 $mg/m^3$ limit can be readily accommodated.

The above guidelines acknowledge that, at least for sensitive receptor locations, more stringent ground-level ambient concentration limits for particulates could be imposed (potentially affecting emission limits) on the basis of plume dispersion modeling and other environmental analysis. This acknowledgment is made in recognition of World Bank's similar provision for cases where vegetation is adversely affected by the standard guideline limits, and in consideration that appropriate limits for protection of human welfare (including vegetation) are more stringent than limits for protection of human health (see World Bank, 1984, p. 52). This acknowledgment is also made in recognition of the lack of baseline ambient data for potentially sensitive receptor locations, and the fact that the frequency distribution of wind directions in the project area is bimodal (northerly November-February; southwesterly April-September), potentially resulting in high chronic exposures that would not be detected using an annual averaging period.

The above criteria also include the provision that dust concentrations resulting from dust storm conditions can be discounted. Such an allowance is reasonable in view of the obvious economic penalties associated with accommodating these high short-term concentrations and the fact that the affected populace is expected to take appropriate protective measures during such periods.

5.4.2.7 Fugitive Dust Guidelines

Fugitive dust control measures (for major plant sources, including coal transfer, processing and storage areas, limestone storage areas, solid waste disposal areas, roadways, etc.) and workplace monitoring provisions should be designed/applied with the objective of meeting the following guidelines, which are based on World Bank Environmental Guidelines (Dust Emissions, June 1983) and World Bank Occupational Health and Safety Guidelines (Power Plants, Coal and Fuel Oil, April 1984):

a. Particulate (dust) controls should be designed/applied with the objective of maintaining dust concentrations at one-half (1/2) of the threshold limit values (TLV) provided in Table 5.4-2 within the plant fence (workplace).

b. Fugitive dust controls shall be designed/applied with the objective of maintaining ambient ground-level dust concentrations within the following limits beyond the plant fence:

24-hour maximum: 500 $\mu g/m^3$

Annual Geometric Mean: 100 $\mu g/m^3$

Dust storm conditions may be discounted in the determination of dust concentrations for criteria a. and b. above.

c. Provisions shall be made for sampling and analysis of fugitive dust in the workplace according to World Bank Dust Emissions Guidelines (June 1983), or equivalent methods, such that compliance with guidelines can be demonstrated.

Basis:

The basis for particulate guidelines for ground-level ambient conditions, described in item b. above, has been previously addressed in Section 5.4.2.6. Guidelines for areas within the plant fence, taken here to mean workplaces in the vicinity of the central power complex, coal storage areas, and treatment/disposal areas, are taken directly from applicable World Bank guidelines as identified above. These guidelines, in turn, have been extracted from pertinent health effects information developed by the U.S. Occupational Safety and Health Administration (OSHA) and the American Conference on Governmental Industrial Hygienists, with the objective of providing appropriate protection for plant workers.

Although air dispersion modeling techniques undertaken during the environmental assessment phase may provide an indication of potential fugitive dust emissions from some sources, considerable reliance on general industry experience will likely be required to ascertain appropriate control measures. However, considering the predominance of exposed soils and lack of wind protection at the plant site locations, and the potential toxicity of coal and coal ash dusts which typically have high $SiO_2$ content, responsible control measures for fugitive dust appear to be indicated.

## 5.4.3 Wastewater Treatment and Disposal

### 5.4.3.1 Waste Streams of Concern

Wastewater of concern to this study originates from three source categories: power plant effluents, sanitary waste from the power plant and worker colony, and site runoff. Site runoff (i.e., stormwater runoff) is considered in the context of sedimention and erosion control guidelines in Section 5.4.5. Guidelines for treatment and disposal of plant wastewater streams and sanitary waste, provided in Sections 5.4.3.2 through 5.4.3.4,

address the two major disposal options that were considered for wastewater: discharge to the Indus River, and disposal in evaporation ponds.

A listing of major waste streams, exclusive of site runoff, is given in Table 5.4-3. Selected pollutants generally associated with these waste streams are listed in Table 5.4-4. The following paragraphs provide a brief characterization of these effluents based on information from the U.S. EPA (1980) and other pertinent sources.

Cooling Tower Blowdown: As shown in Table 5.4-4, blowdown from recirculating cooling water may contain contaminants derived from make-up water; corrosion of condenser tubes and other system components; chemical additives to control erosion, scaling, and biofouling; and ambient air. Make-up water contributes calcium and magnesium salts which become concentrated as dissolved solids in the blowdown. Metallic oxides (e.g., of chromium, beryllium, copper, nickel, and zinc), which are of environmental concern, originate as corrosion products in the cooling water system. Corrosion and scaling inhibitors commonly contain chromium, zinc, and phosphorus. Biofouling control is usually accomplished by chlorination, resulting in total residual chlorine (free chlorine and chloramines) and, potentially, chlorinated organics (e.g., chloroform) in the discharge. Air pollutants, which are absorbed by the cooling tower water, such as sulfate and nitrates, would not be expected to be measurable unless the cooling tower is located in the vicinity of plume downwash.

Ash Transport Water: Fly ash transport water is usually alkaline due to high sodium and calcium content, which beneficially immobilizes a portion of the trace elements listed in Table 5.4-4. Lakhra ash has relatively low concentrations of these constituents, which may reduce this beneficial effect. Regardless, fly ash pond overflows have been found to contain trace metals at higher concentrations than source water as a result of dissolution of reactive compounds on the surface of fly ash particles.

The metal pollutants characteristic of bottom ash transport water tend to have high vaporization temperatures which are less soluble in water. In addition, trace elements of concern in bottom ash (Table 5.4-4) are largely fused into inert matrices as a result of their exposure to high temperature regimes in the boiler furnace. As such, less environmental concern for release of potentially toxic trace metals to surface water (or ground water) is warranted for bottom ash transport water than that for fly ash.

Runoff from solid waste disposal areas is addressed in Section 5.4.4.

Metal Cleaning Wastes: Metal cleaning wastes are generated by water washing and/or chemical cleaning of boiler waterside and fireside, air preheater and condensate feedwater system surfaces. Washing is done prior to chemical cleaning, and on an infrequent basis after the initial pre-operational wash. The chemical cleaning waste stream is generated during pre-operational cleaning of the boiler waterside and on a 2 to 4 year cycle thereafter. The pre-operational cleaning waste contains oil and grease, mill scale, and miscellaneous debris in addition to boiler scale and cleaning agents (Table 5.4-4). It may be acidic or alkaline depending on the chemical agents selected to remove waterside scale buildup. Alkaline cleaning wastes are typically high in ammonia salts; acid cleaners generate wastes containing high metal concentrations. Passivating agents, which are usually incorporated into the cleaning solutions, may contain organic polymers, chromium and zinc. All wastes from chemical cleaning are high in decomposable organics, total dissolved solids, and total suspended solids (TSS).

Nonchemical cleaning of the boiler fireside, air preheater and condensate feedwater system generates waste streams high in metallic corrosion products, ash residues, and debris. These waste streams are generally characterized by high TDS, TSS, and other pollutants listed in Table 5.4-4.

Low Volume Wastes: Low volume wastes include boiler blowdown, water treatment system waste (from demineralizers, clarifiers, evaporators, line/lime soda softeners, etc.), laboratory drains, and plant and yard drains. Sources of pollutants in these waste streams, as listed in Table 5.4-4, include source water, process chemicals, and leaks and spills. Common pollutants observed in these miscellaneous waste streams include various metals, phosphates, chlorides, sulfates, and oil and grease.

Coal Pile Runoff: Runoff from coal storage areas contain suspended coal fines and other suspended materials. Since this runoff tends to be acidic, primarily as a result of iron sulfide oxidation, it may contain numerous metals of environmental concern such as those listed in Table 5.4-4.

Sanitary Wastes: Sanitary waste stream constituents of environmental concern include high decomposable organics (as reflected by high $BOD_5$, COD), suspended solids, nutrients in the form of phosphate, nitrate, and ammonia, and pathogenic organisms.

5.4.3.2 General Wastewater Treatment Guidelines

The following guidelines are considered appropriate for wastewater treatment and disposal facilities, regardless of the disposal option selected (surface water discharge or use of evaporation ponds):

a. Facilities shall be located above the 100-year flood elevation, or otherwise protected from incursion of flood flows.

b. Impoundment dikes shall be constructed such that potential failure from erosion is minimized, by the use of appropriate grading, compaction, establishment of vegetation, rip-rap placement, or other measures as applicable.

c. Impoundments and the coal storage areas shall be designed to minimize input of stormwater run-on from surrounding areas. Except for impoundments designed for treatment or runoff (as from solid waste disposal areas, coal and limestone storage areas, etc.), which shall be designed to accommodate the 10-year, 24-hour rainfall event, all treatment and disposal impoundments shall be designed to accommodate all stormwater inputs with sufficient freeboard (approximately 3 feet (1 meter)) to prevent overtopping.

d. Where the potential for mosquito propagation exists in treatment or disposal ponds, such ponds shall, if practicable, be located remote from centers of human activity to minimize risk of disease borne by these vectors.

e. If the nature of the wastewater and geotechnical investigations indicates significant potential for contamination of useable groundwater or surface water by seepage from treatment or disposal ponds, or the coal storage areas, such ponds or storage areas shall be provided with clay or synthetic liners as appropriate to reduce potential for contamination to acceptable levels. If practicable, the bottom of such liner shall be located a minimum of 1.5 meters (5 feet) above the seasonal high groundwater table. In such cases, appropriate provisions should be made for monitoring potentially contaminated surface water and/or groundwater.

f. Wastewater shall be reused as process water where practicable.

Basis:

Guidelines a.-e. above are based on good engineering practice to prevent the disposal of harmful pollutants to the environment, potentially creating acute or long-term risk to the regional community and its resources. The design features listed above are considered standard practice for power plant disposal facilities. Guideline f. is also based on good engineering practice, and is designed to minimize water consumption and treatment requirements.

5.4.3.3 Guidelines for Disposal by Evaporation

In addition to the guidelines specified in Section 5.4.3.2, the following guidelines (a.-d.) are considered appropriate to wastewater effluents discharged to evaporation ponds:

a. Wastewater streams containing oil and grease should be treated as necessary to prevent significant potential for harm to wildlife (e.g., waterfowl), aesthetic (visual and olfactory) impairment, or impairment of evaporation capabilities.

b. Highly acidic or caustic waste streams shall either be neutralized (pH 6-9) prior to discharge into evaporation ponds, or otherwise introduced and neutralized in such ponds in a manner that does not pose a hazard to humans or wildlife, or result in significant potential for contamination of natural surface waters or useable groundwater from pond seepage.

c. Sanitary waste shall receive, as a minimum, primary treatment (stabilization and disinfection) prior to discharge of effluent for evaporation in a surface impoundment to reduce the potential for adverse health effects.

d. Evaporation ponds and influent waste streams shall be segregated as appropriate to confine harmful concentrations of toxic trace metals to the smallest area reasonably practicable to reduce potential exposures to waterfowl and other wildlife.

5.4.3.4 Guidelines for Discharge to the Indus River

a. In addition to the guidelines specified in Section 5.4.3.2, the guidelines listed in Table 5.4-5 are considered appropriate for wastewater effluents discharged to the Indus River.

b. Design provisions should be made as appropriate for sampling and analysis of effluents, according to recognized standard procedures (APHA, 1980 or equivalent), such that conformance to guidelines can be demonstrated.

Basis:

The effluent guidelines recommended for power plant waste streams, as listed in Table 5.4-5, are less stringent than those required of comparable new facilities in the USA (New Source Performance Standards), but essentially conform to those considered best practicable technology (BPT) by the U.S. EPA under 40 CFR 423, with the following additional limitations:

- It is recommended that formal study efforts be undertaken to maintain chlorination dosage to the minimum necessary to achieve biofouling control, in the interest of protecting aquatic biota and minimizing costs.

- Circulating water treatment chemicals that do not contain priority pollutants (40 CFR 423) should be used, since they are readily available and represent no cost penalty.

- Zero discharge of ash transport water should be considered as a potential measure to reduce introduction of metals from these waste streams to the environment. This limitation could potentially be met through transport water recycling, use of a dry fly ash handling system, evaporation ponding or a combination of these methods.

The effluent limitations for pH (6-9) and suspended solids, (30 mg/l average, 100 mg/l maximum) conform to World Bank Standards as well as those of U.S. EPA, and should, therefore, be reasonable for this application. Use of PCB's for transformer fluid or similar applications is discouraged on the basis that it is persistent in the environment, undergoes bioaccumulation in food chains, and has recently been linked to adverse health effects in humans. Moreover, acceptable substitutes to PCB's are readily available.

The limits for sanitary waste, taken from the U.S. EPA (40 CFR 133) are considered standard practice in the USA for discharge of secondary sewage treatment effluent to surface water in the interest of preventing undue degradation of water quality and risk of health hazards to the general public.

### 5.4.4 Solid Waste Disposal

#### 5.4.4.1 Solid Wastes of Concern

The major solid wastes generated by the proposed Lakhra Power Plant and associated worker colony are the following: bottom ash; fly ash; flue gas desulfurization (FGD) sludge (if FGD is used); solids generated from treatment of raw water, process water, and wastewater (including evaporation pond residue); sanitary waste treatment sludge; and miscellaneous refuse (e.g., construction debris, garbage). Notable environmental concerns in regards to solid waste disposal include land consumption, potential contamination of surface water and ground water resources, fugitive dust, pest control and related human health concerns, and aesthetics.

Bottom ash, fly ash, and FGD sludge are the most voluminous of these solid wastes. An indication of the amount of ash potentially generated, assuming a 70 percent plant capacity factor for the two 350 MW Lakhra units, has been calculated to be about 157,000 metric tonnes/year per unit (173,000 tons/year) of bottom ash and 367,000 metric tonnes/year per unit (404,000 tons/year) of fly ash. The amount of FGD sludge potentially generated depends on the FGD method selected and removal efficiency requirements, but will likely approach the total volume of ash produced by the plant. Amounts of other solid wastes potentially produced by the proposed facilities are, by comparison, miniscule. Of these, miscellaneous refuse, sanitary waste treatment sludge, and water treatment wastes (e.g., clarifier sludge) will be produced during both construction and operational phases of the project. Solid wastes produced in certain process water and wastewater treatments (e.g., demineralization, softening, evaporation pond residues) would be produced primarily during plant operation.

The chemical constituents of ash and plant wastewater (and the residues therein) of environmental concern are described in Section 5.4.3. Primary raw water treatment by clarification will create relatively innocuous solid waste in the clarifier underflow, consisting of Indus River suspended sediments, and coagulated dissolved solids and metals in a high alkalinity matrix of unreacted lime, alum, and polymer. Subsequent filtration of part of the clarifier overflow for use as treatment of boiler makeup, wash water, fire protection, ash sluicing, FGD makeup, etc. will result in a high-solids filter backwash that will indirectly contribute to the solid waste loading. Constitutents in this backwash stream are not considered to be of high environmental significance.

FGD sludge from lime and limestone scrubbing processes consists mostly of calcium sulfite, calcium sulfate, and calcium carbonate, proportions of which depend on the raw materials (i.e., limestone) and process methods (e.g., oxidation of calcium sulfite to sulfate) that are employed. Similarly, water content may vary considerably (typically 30-70 percent). FGD sludge and sludge liquor also may contain numerous trace elements of environmental concern (e.g., chromium, copper, lead, arsenic); pH of sludge varies, ranging roughly 3-11 pH units in one survey of several facilities (see Dvorak et al, 1978).

Sanitary waste treatment (i.e., sewage) sludge is the concentrated particulate organic fraction produced during sewage treatment. Depending on the stabilization, conditioning, and dewatering of this material, the sludge may be transported and disposed as a liquid or solid. Environmental concerns for disposal of sewage sludge are prompted by its high concentrations of decomposable organics, nitrates, and phosphates, which can contribute to the degradation of surface waters, its potential for harboring pathogenic organisms, and its potential for producing noxious odors. Since the sewage treatment system is expected to receive no industrial process wastes from the power plant or other industrial sources, the sludge is not expected to contain potentially harmful concentrations of trace metals or other materials such is often observed in more industrialized situations.

Miscellaneous refuse includes such solid wastes as construction debris, packaging materials, food preparation wastes, and the like. Disposal of these wastes is of environmental concern from the standpoint of pest control and related human health concerns, and aesthetics (visual and olfactory). Certain components of this waste category (e.g., various organics, including residual solvents, etc.) can also contribute significantly to surface water and ground water contamination.

Various alternative methods, used singly or in combination, are potentially available for the disposal of solid wastes generated by the plant and worker colony. Fly ash and bottom ash can be disposed of separately or as a mixture either in dry form for deposit in a landfill, or as a slurry and sluiced to a disposal impoundment. Landfilling and impoundment are also commonly used disposal alternatives for FGD sludge. However, FGD sludges are thixotropic (i.e., become fluid when disturbed, and set to a gel when allowed to stand). It is therefore generally desirable to neutralize this property prior to disposal through forced oxidation, addition of chemical fixatives, mixing with fly ash, or a combination of these methods. Ash and FGD sludge are also potentially useable byproducts, providing another possible alternative for

disposal. For example, ash can be used in cement and asphalt mixes; FGD sludge is a potential source of gypsum for building materials.

Water treatment wastes, properly conditioned and de-watered sewage sludge, and miscellaneous solid wastes may also be appropriately landfilled. Potentially viable alternatives for sewage sludge include incineration or use as a soil amendment on cropland. Organic components of miscellaneous solid wastes are also amenable to disposal by incineration.

5.4.4.2 Guidelines for Solid Waste Disposal

The following guidelines were considered appropriate for the evaluation of design alternatives for solid waste disposal:

a. Solid waste disposal in landfills and impoundments shall be:

   1. Located above the 100 year flood elevation,

   2. designed to minimize potential for wind or water erosion of the disposal facility,

   3. designed to minimize fugitive dust,

   4. designed to minimize stormwater run-on and run-off, and

   5. provided with sedimentation/evaporation basins or treatment facilities as appropriate to prevent significant contamination of surface water, if any, from run-off.

b. Where the characteristics of the solid waste material to be disposed of and results of geotechnical investigations of the disposal site (landfill or impoundment) indicate that significant potential for contamination of natural surface water or useable groundwater exists due to seepage, design of the disposal facility shall include:

   1. a clay or synthetic liner designed to reduce the potential for such contamination to acceptable levels,

   2. where practicable and appropriate, location of the base elevation of the disposal facility a minimum of 1.5 meters (4.9 feet) above the seasonal high groundwater table, and

3. provisions for monitoring potentially contaminated surface water and/or ground water.

c. Feasible measures for closure of solid waste facilities to ensure long-term waste containment and, as appropriate, prevention of significant potential for contamination of natural surface waters and useable groundwater, should be included in the evaluation of solid waste disposal alternatives.

d. Regardless of disposal method, FGD sludge should be stabilized by appropriate methods to reduce potential fugitive dust during the operational phase and to preclude permanent loss of land for other potential uses in the long term.

e. If sewage sludge disposal involves its application as a soil amendment, the recommendations of the World Health Organization (WHO, 1981) and/or U.S. EPA (40 CFR 257, Appendix II) should be implemented as appropriate to reduce to acceptable levels the potential for adverse health effects from pathogenic organisms.

f. Miscellaneous refuse should be disposed of in a manner that minimizes, insofar as practicable, attraction and proliferation of pest organisms and disease vectors (e.g., rodents, flies, mosquitos) and degradation of olfactory and visual aesthetics. Landfills and incineration sites for such wastes should be located remote from centers of human activity.

### 5.4.5 Sedimentation/Erosion Control Guidelines

a. Planning and design of the proposed Lakhra units and appurtenant facilities should include provisions for appropriate erosion and sedimentation control measures (for both construction and operational phases) that will reduce potential for the following occurrences to acceptable levels:

- loss of soils from sheet, gully, and stream channel erosion
- loss or damage to roadways and other structures from erosion, and
- degradation of surface water quality and sedimentation of streambeds by eroded soils.

The following documents offer guidance for the development and implementation of the erosion and sedimentation control measures:

World Bank Environmental Guidelines - Strip (Surface Mining Operations), Sediment and Erosion Control (Land Reclamation) - July 1982.

U.S. Environmental Protection Agency, 1976 - Erosion and Sedimentation Control EPA-625/3-76-006 (or equivalent).

b. Runoff and drainage collected from areas disturbed by construction, and collected site drainage from the completed facility, should not exceed the following limitations prior to discharge into surface waters:

| | |
|---|---|
| Total Suspended Solids: | 30 mg/l (average) |
| | 100 mg/l (maximum) |

Settling ponds established for this purpose should be sized to accommodate the 10-year, 24-hour rainfall event.

Basis:

Implementation of the proposed project harbors the potential for accelerated erosion and increased turbidity and sedimentation of surface water bodies (primarily the Indus River) beyond present high levels. In view of the low soil productivity potential of most areas subject to disturbance by the project, primary concerns for erosion control may be protection of structures in most areas. However, sedimentation of surface water bodies, erosion of stream/river banks, and loss of soils, especially on agricultural lands, is also of potential concern.

### 5.4.6 Noise Control Guidelines

Acoustical control measures for the proposed power plant facilities and worker colony should be designed/applied with the objective of meeting the following guidelines, which are based on World Bank Guidelines (World Bank Environmental Guidelines - Noise, August 1983; World Bank Occupational Health and Safety Guidelines - Power Plants, Coal and Fuel Oil, April 1984):

a. Sound levels at locations outside the plant fence, including the worker colony, should be maintained within the following levels:

| Outdoor Location | Yearly Average Sound Level[a] |
|---|---|
| Residences, Hospitals, Schools | $L_{dn} \leq 55$ |
| Commercial enterprises, recreation areas, unpopulated areas | $L_{eq(24)} \leq 70$ |

[a] $L_{dn}$ = day-night average A-weighted equivalent sound level, with a 10-decibel weighting applied to nighttime levels.

$L_{eq(24)}$ = equivalent A-weighted sound level over 24-hours.

b. Sound levels within the plant fence (i.e., work places) during construction and operation should, where practicable, be maintained below 75 dBA. Noise levels around generators and other such equipment should be maintained below 90 dBA. Where maintenance of the 90 dBA level is not practicable, those persons working near the equipment should have access to an insulated room where the noise level is below 75 dBA, and be supplied with ear protection to be worn when working around equipment.

Basis:

The guidelines presented in a. and b. above are in accordance with pertinent World Bank Guidelines, which in turn are generally compatible with findings of the U.S. EPA (1974) related to protection of public health and welfare and the U.S. Occupational Safety and Health Standards (29 CFR 1910.95). As such, these measures should provide adequate protection of workers and the surrounding populace from adverse health effects, impairment of job performance, and general annoyance.

The guidelines provided above in item a. are, for all practical purposes, identical to those recommended by the 1983 SWEC study. SWEC recommended a goal of 85 dBA, with a maximum level of 90 dBA, for occupational noise exposure (item b., above) prior to issuance of World Bank Occupational Safety and Health Guidelines in April 1984.

### 5.4.7 Hazardous/Toxic Substances Guidelines

The following guidelines are provided in the interest of preventing undue release to the environment of hazardous and/or toxic materials used in plant processes or systems.

a. Planning and design of the proposed Lakhra units and appurtenant facilities should include the development and implementation of appropriate measures to minimize the potential for contamination of air, surface water, ground water, and soils from deliberate or accidental uncontrolled discharge of hazardous and/or toxic substances used in the facility (Reference World Bank Environmental Guidelines: General Guidelines, Disposal of Industrial Effluents - June 1983). Substances appropriately addressed by these measures include the following:

lubricating oil
fuel oil
gasoline
chlorination chemicals
caustics
acids
solvents
pesticides

b. If pesticides are obtained and used by the project (e.g., for mosquito control), their selection, storage, handling and use should be in accordance with the following:

1. <u>World Bank Occupational Safety and Health Guidelines</u>:

| | |
|---|---|
| Pesticides: | Packaging and Labeling -November 1983 |
| Pesticides: | Transportation and Distribution - November 1983 |
| Pesticides: | Guidelines for Use - November 1983 |
| Rodenticides: | Guidelines for Use - October 1983 |

2. <u>USAID Regulations</u>:

22 CFR 216.3(b), as applicable

c. Available alternatives to polychlorinated biphenyls (PCB) should be specified for electrical component (e.g., transformer) dielectric fluid.

<u>Basis</u>:

Provision of measures to minimize potential release of hazardous or toxic substances to the environment is appropriate on the basis of human health and safety as well as concerns for the natural environment in general. While potential effects of uncontrolled releases of most such materials would be localized

and temporary, they may be acutely severe. In addition, release of persistent toxic substances, including certain pesticides and PCB's, harbors the potential for more subtle long-term adverse effects on the environment as a result of bioaccumulation of these substances in food chains, which include human nutritional resources (e.g., fisheries).

### 5.4.8 Potable Water Supply Guidelines

The following guidelines are considered appropriate for potable water systems:

a. Potable water for all on-site construction and operations personnel, and potable water treatment systems for the proposed Lakhra Power Plant and worker colony, should to the extent reasonably practicable be supplied/designed with the general objective of meeting the World Health Organization (WHO) Guidelines for Drinking-Water Quality (WHO, 1984) as summarized in Table 5.4-6.

b. Although the World Health Organization provides no specific guideline values for protozoan or helminth pathogens, subject potable water supplies and treatment systems should include measures to reduce potential exposure levels to recipients to as low a level as practicable (e.g., through coagulation, filtration, and chlorination).

c. Water treatment design should be undertaken with recognition that additional water treatment beyond conventional clarification and disinfection may be advisable on the basis of water quality information obtained in the environmental monitoring and environmental assessment program activities.

Basis:

Guideline values provided by the World Health Organization (WHO, 1984) represent the level of a constituent that ensures aesthetically pleasing water and results in no significant risk to health; they therefore represent desirable goals for drinking water quality. As noted by WHO (1984), the guidelines should not be construed as strict standards, particularly where no health hazard can be demonstrated. However, information presently available to the project (e.g., concentrations of trace metals, pesticides, and radionuclides in the Indus River) is insufficient to thoroughly assess all potential health hazards for which practicable water treatments can be applied. It therefore appears advisable to consider the potential desirability of additional water treatment based on results of the baseline monitoring program and environmental assessment activities.

### 5.4.9 Cooling Water Intake and Discharge

#### 5.4.9.1 Potential Effects of Concern

Among the potential adverse environmental impacts of greatest concern with regard to withdrawal and discharge of power plant cooling water are the following:

a. Physical degradation of aquatic habitat from construction,

b. losses of aquatic organisms due to entrapment in the cooling system and subsequent impingement of larger organisms (e.g., juvenile and adult fish) on intake screens or entrainment of smaller organisms (e.g., fish eggs and larvae) through the system, and

c. loss or alteration of habitats, and lethal or sub-lethal effects on organisms, resulting from discharge of heated effluent. (Potentially toxic chemicals in the cooling water discharge were addressed in Section 5.4.3).

These adverse effects are of particular concern in cases involving species deemed important (e.g., species critical to ecosystem functioning, valuable for subsistence or commerce, or considered threatened or endangered), or habitats upon which these important species depend.

The selection of a closed-cycle cooling sytem (i.e., cooling towers) for the Lakhra Power Plant greatly reduces the potential for adverse cooling system impacts in comparison to that expected from a once-through cooling system. For example, the potential for impingement and entrainment losses will be much lower, since water withdrawal for the two 350 MW units is expected to be only 0.945 $m^3/s$ (15,000 gpm), as compared to 27.1 $m^3/s$ (100,000 gpm) for a comparable once-through cooling system. Similarly, discharge of cooling tower blowdown to the Indus River would result in a much smaller thermal plume than that expected to result from discharge of once-through cooling water.

Nonetheless, good engineering practices and applicable guidelines and regulations prompted adoption of the following guidelines (in addition to other applicable guidelines, particularly those provided in Sections 5.4.3, 5.4.5, and 5.4.11).

#### 5.4.9.2 Cooling Water Intake and Discharge Guidelines

a. To the extent practicable, the cooling water intake and discharge structures shall be located remote from habitats known to be sensitive (e.g., critical habitat for threatened or endangered species, important spawning and nursery

areas, migratory pathways), and located to minimize potential for recirculation of heated discharge water into the intake.

b. To the extent practicable, the intake structure shall be designed to minimize potential for entrapment of fish by providing low through-screen velocities, generous fish escapeways, and/or other appropriate measures as determined from a review of current fish protection technologies (e.g., U.S. EPA, 1976; ASCE, 1982).

c. In the case of discharge of cooling tower blowdown to natural surface waters (Indus River), and where this discharge exceeds ambient water temperatures by 3°C (5.4°F) - or 5°C (9.0°F) when ambient water is 28°C (82.4F) or less - the discharge structures shall, insofar as practicable, be designed to achieve rapid mixing of the effluent with the ambient river.

Basis:

Conformance to the guidelines provided in a.-c.above should ensure adequate protection of aquatic biota of the Indus River, especially considering the large size of this water body relative to the small flow volumes of the plant water intake and cooling tower blowdown. Additional information useful to the determination of preferred location and detailed design of intake and discharge structures to reduce impact potential may be obtained as part of the environmental assessment activities. Such accommodations are often compatible with engineering criteria; for example, recirculation of thermal effluent is undesirable from the standpoint of cooling efficiency and from an environmental standpoint in that fish may congregate in the discharge plume during cooler periods of the year, and thus become more susceptible to entrapment at the intake. Provision for rapid mixing of the thermal effluent would reduce the size of the plume, and would prevent extended residence of fish in that portion of the plume where temperatures and residual chlorine concentrations are highest.

World Bank guidelines for thermal discharges (General Guidelines - Disposal of Industrial Effluents, June 1983) indicate that effluent temperatures should not be more than 3°C (5.4°F) higher than that of the receiving waters, or 5°C (9.0°F) higher than receiving waters at ambient water temperatures of 28°C (82.4°F) or less. Alternatively, World Bank indicates that the following formula may be used where maintaining these temperature differentials results in excessive costs or undue harm to fisheries or other aquatic life:

$$T_{max} = OT + \frac{URLT - OT}{3}$$

where:

$T_{max}$ = Maximum allowable stream temperature after mixing.

OT = Optimum temperature for species affected.

URLT = Ultimate incipient lethal temperature for species affected.

These World Bank guidelines were not formally adopted for the proposed Lakhra units, since cooling tower blowdown can be expected to often be more than 5°C (9.0°F) warmer than Indus River ambient water temperatures, and provisions for a mixing zone are unclear in the guidelines. In addition, it is unlikely that adequate thermal tolerance data is available for resident Indus River fishes to properly employ the above formula. However, use of closed-cycle cooling and rapid mixing in the river (guideline c. above) would result in a very small thermal plume and negligible increase in average river temperature. With the provision that the 3-5°C (5.4-9.0°F) temperature differential is applied at the mixing zone boundary, it is expected that the proposed discharge guidelines would be unequivocally in accord with World Bank guidelines.

The guidelines also acknowledge the desirability of reducing potential impacts on important biota, including threatened and endangered species and their habitats which are of particular concern in view of USAID regulations (22 CFR 216.5).

### 5.4.10 Secondary Environmental Effects

#### 5.4.10.1 Potential Effects of Concern

Secondary environmental effects, as used here, are effects stemming from strains on existing infrastructure of the project area that are imposed by the project itself and project-related population influx (refer: World Bank Environmental Guidelines - Secondary Environmental Effects of Industrial Projects, October 1983). These effects may include deprivation or deterioration of such human amenities as housing, schools, medical care, roadways, electric power, water supply, and sewage treatment, with consequent impacts on the natural environment through water and air pollution, and ill-planned land despoilation.

Planning for the power plant must address the influx of large numbers of construction and operating staff. It is anticipated that 2,200 to 2,400 operating personnel and 4,000 to 5,000

construction staff will be located at the plant site. The impact of these people on local infrastructure will vary from site to site, with impact on Khanot and Lakhra being the most predominant due to the small numbers of people and limited infrastructure currently in these areas. Infrastructure improvements and the development of new facilities such as water supply and sewage treatment will likely be necessary not only for plant staff but for the existing residents of sparsely populated areas as a mitigation for the influx of new people.

The following guidelines are provided in the interest of reducing the potential for adverse secondary environmental effects of the Lakhra Power Plant project to acceptable levels. The guidelines acknowledge the need to consider infrastructural support (i.e., expansion, upgrading, and/or maintenance) to accommodate: a) direct requirements of plant construction and operation for such activities as material transport, communications, electric power; b) influx of construction and operations personnel and their families, as appropriate; and c) population influx attributable to creation of additional jobs in the local economy as an indirect result of the project (i.e., creation of local support economy).

5.4.10.2 Guidelines - Secondary Environmental Effects

The following guidelines are considered appropriate to reduce the potential for adverse secondary environmental effects of power plant construction and operation:

a. To the extent that such facilities are nonexistent or unavailable, or where it is considered appropriate to place minimal reliance on existing infrastructure, the power plant facilities to be developed and addressed in the feasibility study shall include such basic infrastructure as potable water supply, sanitary waste treatment facilities, new roads and railways and other facilities considered directly necessary to construct and operate the power plant. Similarly, the feasibility study shall address improvements to existing major infrastructural (e.g., roadways, railways) directly required for plant construction or operation.

b. Planning for the power plant will include provisions for a staffed residential colony designed to accommodate plant operations personnel and, as appropriate, their families.

c. The planned residential colony shall be designed to provide the following infrastructural amenities:

Housing
Maintenance/Repair Facilities
Commissary Facilities
Elementary School
Mosque
Medical Clinic
Fire Protection
Bank
Physical Security/Law Enforcement
Recreational Facilities
Local Roadways
Public Transportation
Electric Power Supply/Distribution
Telephone Service
Potable Water Supply and Distribution
Sewage Collection and Treatment Facilities
Solid Waste (Refuse) Collection and Disposal, and Landscaping

in accordance with other pertinent environmental guidelines in Section 5.4 and in accordance with specific requirements of USAID and WAPDA.

d. To the extent necessary to establish feasibility and costs for the power plant, the power plant feasibility investigation shall consider other infrastructural provisions considered appropriate by USAID and WAPDA to reduce to acceptable levels adverse secondary environmental effects resulting from:

1) Influx of construction workers and their families.

2) Population influx into the area in response to expansion of the local support economy resulting from plant development.

e. Provisions for the residential colony and other infrastructure provisions addressed in items a.-d. above shall consider the specific requirements of each of the alternative site locations (Jamshoro, Lakhra, and Khanot) and shall be coordinated with similar infrastructure being developed for the Lakhra Mine and for the planned oil-fired units at Jamshoro.

### 5.4.11 Other Environmental Concerns

Other potential environmental concerns related to the Lakhra Power Plant, in addition to those addressed by guidelines in Sections 5.4.2 through 5.4.10, are also appropriate to consider in early planning stages of the project. Among these concerns are the following:

a. Adverse impacts on important or sensitive land uses (e.g., cropland, built-up areas, roadways).

b. Adverse impacts on important biota and habitats (e.g., threatened or endangered species and their habitats).

c. Adverse effects on cultural resources (e.g.. sites of archeological, historical, or religious significance).

d. Adverse social and economic effects.

Feasibility evaluations for the power plant and ancillary facilities should therefore be undertaken with the general objective of maintaining adverse impact in these areas within acceptable limits. It is expected that information pertinent to these concerns will be obtained from reconnaissance of the project area in this study and results of the social soundness and environmental assessment studies.

### 5.4.12 Literature Cited

APHA. 1980. Standard Methods for the Examination of Water and Wastewater (15th ed.), American Public Health Association, Washington, DC. 1134 p.

ASCE. 1982. Design of Water Intake Structures for Fish Protection, American Society of Civil Engineers, New York. 163 p.

Dvorak, A. J., et. al. 1978. Impacts of Coal-Fired Power Plants on Fish, Wildlife, and Their Habitats. FWS/OBS-78/29. U.S. Fish and Wildlife Service, Washington, DC. 260 p.

SWEC. 1983. Lakhra Coal and Power Development Project Review. (April, 1983) prepared for U.S. AID by Pakistan Water and Power Development Authority, Pakistan Mineral Development Corporation, and Stone and Webster Engineering Corporation.

USAID. 1984. Solicitation No. 391-0478-024 for Lakhra Power Plant Feasibility Study (20 July 1984). U.S. AID/ Islamabad, U.S. Department of State, Washington, DC.

United States Code of Federal Regulations, 22 CFR 216. U.S. AID Environmental Procedures (31 March 1980).

United States Code of Federal Regulations, 29 CFR 1910.95. U.S. OSHA Occupational Noise Exposure Standards (10 February 1984).

United States Code of Federal Regulations, 29 CFR 1926.52. U.S. OSHA Occupational Noise Exposure Standards for Construction (14 November 1980).

United States Code of Federal Regulations, 40 CFR 50, U.S. EPA National Primary and Secondary Ambient Air Quality Standards (22 April 1983).

United States Code of Federal Regulations, 40 CFR 51.1(ii), U.S. EPA Good Engineering Practice Stack Height Definition (26 October 1984).

United States Code of Federal Regulations, 40 CFR 60 (Subparts D, Da), U.S. EPA Air Emission Standards for Fossil-Fueled Steam Generators.

United States Code of Federal Regulations, 40 CFR 133, U.S. EPA Sanitary Waste Treatment Guidelines.

United States Code of Federal Regulations, 40 CFR 257, U.S. EPA Regulations on Criteria for Classification of Solid Waste Disposal Facilities and Practices.

United States Code of Federal Regulations, 40 CFR 423, U.S. EPA Effluent Guidelines and Standards for Steam Electric Power Generating.

U.S. EPA. 1974. Information on Levels of Environmental Noise Requisite to Protect Public Health and Welfare with an Adequate Margin of Safety. EPA 550/9-74-004, Washington, DC.

U.S. EPA. 1976a. Erosion and Sedimentation Control EPA-625/3-76-006. U.S. Environmental Protection Agency, Washington, DC.

U.S. EPA. 1976b. Development Document for Best Technology Available for the Location, Design, Construction, and Capacity of Cooling Water Intake Structures for Minimizing Adverse Environmental Impact (April, 1976). EPA 440/1-76/015-a. U.S. Environmental Protection Agency, Washington, DC. 263 p.

U.S. EPA. 1980. Development Document for the Steam Electric Point Source Category. EPA 440/1-80/029-b. U.S. Environmental Protection Agency, Washington, DC.

World Bank. 1984a. Compilation of World Bank Environmental Guidelines (July 1984). World Bank Office of Environmental Affairs, Washington, DC. 422 p.

- Sulfur Dioxide Emission Guidelines, April 1984.
- Sulfur Dioxide Sampling and Analysis Guidelines, December 1982.
- Nitrogen Oxide Emissions Guidelines, November 1982.
- Nitrogen Oxide Sampling and Analysis, November 1982.
- Dust Emissions General Pollution Guidelines, June 1983.
- Electrostatic Precipitator Guidelines, June 1983.
- Strip Surface Mining Operations (Sediment and Erosion Control - Land Reclamation), July 1982.
- Noise, August 1983.
- General Guidelines: Disposal of Industrial Effluents, June 1983.
- Secondary Environmental Effects of Industrial Projects, October 1983.

World Bank. 1984b. Occupational Health and Safety Guidelines (June 1984), World Bank Office of Environmental Affairs, Washington, DC.

- Power Plants, Coal and Fuel Oil, April 1984.
- Pesticides: Guidelines for Use, November 1983.
- Pesticides: Packaging and Labeling, November, 1983.
- Pesticides: Transportation and Distribution, November 1983.
- Rodenticides: Guidelines for Use, October 1983.

WHO. 1981. The Risk to Health of Microbes in Sewage Sludge Applied to Land. EURO Report No. 54. World Health Organization, Regional Office for Europe, Copenhagen. 27 p.

WHO. 1984. Guidelines for Drinking Water Quality (Vol. 1) World Health Organization, Geneva. 130 p.

TABLE 5.4-1
WORLD BANK $SO_2$ EMISSIONS CRITERIA

| Pollution Category | Ambient $SO_2$ Concentrations ($\mu g/m^3$) Annual Arith. Mean | 24 Hour Maximum | Criterion I: Maximum $SO_2$ Emission Based on Annual Capacity Factor (Tons/Day) | Criterion II: Maximum Allowable Ground Level Increment to Ambient (Annual Arithmetic Mean ($\mu g/m^3$)[1] |
|---|---|---|---|---|
| Unpolluted | <50 | <200 | 500 | 50 |
| Moderately Polluted[2] | | | | |
| Low | 50 | 200 | 500 | 50 |
| High | 100 | 400 | 100 | 10 |
| Very Polluted[3] | >100 | >400 | 100 | 10 |

NOTE: $1 \mu g/m^3 = 3.82 \times 10^{-4}$ ppm $SO_2$

[1]As determined from plume dispersion modeling study.

[2]For intermediate values between 50 and 100 $\mu g/m^3$ linear interpolations should be used.

[3]No projects with $SO_2$ emissions are recommended by World Bank in these areas.

TABLE 5.4-2

THRESHOLD LIMIT VALUES (TLV) FOR DUSTS


PART A: FOR 8-HOUR WORKDAY (40 HOUR WORK WEEK)[a]

| Dust Type | TLV Millions of Particles per Cubic Foot (mppcf) | TLV Milligrams per Cubic Meter $mg/m^3$ |
|---|---|---|
| **Dusts Containing >1% Crystalline $SO_2$** | | |
| Total Dust | | $\frac{30}{\% SiO_2 + 2}$ |
| Cristobalite and Thidymite | | $\frac{15}{\% SiO_2 + 2}$ |
| Respirable Fraction[b,d] | $\frac{300}{\% SiO_2 + 10}$ | $\frac{10}{\% SiO_2 + 2}$ |
| **Dusts Containing >1% Amorphous $SiO_2$** | | |
| Total | | 3 (all Particle Sizes) |
| Respirable[d] | | 1 (<5 μm) |
| **Silicates Containing <1% $SiO_2$** | | |
| Asbestos (all forms) | | 2 fibers |
| Talc (fibrous), Tremolite[c] | | 1 (>5 μm)/cc |
| Graphite (Natural), Soapstone, Talc (Nonasbestiform) | 20 | - |
| Portland Cement, Perlite | 30 | - |
| Mica | - | 10 |
| **Bituminous Coal Dust** | | |
| Respirable Fraction <5% $SiO_2$[d] | | 2.4 |
| Respirable Fraction >5% $SiO_2$[d] | | $\frac{10}{\% SiO_2 + 2}$ |

**TABLE 5.4-2**
Page 2 of 2

| Dust Type | TLV Millions of Particles per Cubic Foot (mppcf) | TLV Milligrams per Cubic Meter $mg/m^3$ |
|---|---|---|
| Inert or Nuisance Dusts ($\leq$ 1% $SiO_2$) | | |
| Total[d] | 50 | 15 |
| Respirable Fraction[e] | 15 | 5 |

**PART B: TLV CORRECTION FACTORS FOR WORKDAYS DIFFERING FROM 8 HOURS**

| Workday (hrs) | 1 | 2 | 4 | 8 | 10 | 15 | 20 |
|---|---|---|---|---|---|---|---|
| TLV Correction | 8.0 | 4.0 | 2.0 | 1.0 | 0.8 | 0.53 | 0.4 |

[a]For workdays differing from 8 hours, multiply TLV by appropriate correction factor in Part B.

[b]Concentration and % $SiO_2$ determined from dust fraction passing a size selector with the following characteristics:

| Aerodynamic Diameter (μm): | <2 | 2.5 | 3.5 | 5.0 | 10.0 |
|---|---|---|---|---|---|
| % Passing Selector: | 90 | 75 | 50 | 25 | 0 |

[c]As determined by membrane filter method at 400-450 x, with phase contrast illumination.

[d]Nuisance dust levels above 10 $\mu g/m^3$ (30 mppcf) should not be permitted.

[e]Respirable dust as defined by the British Medical Research Council Criteria, and as sampled by a device producing equivalent results (MRE sampler).

TABLE 5.4-3

SUMMARY OF MAJOR POWER PLANT WASTEWATER DISCHARGES

Cooling tower blowdown

Fly ash transport water

Bottom ash transport water

Chemical metal cleaning wastes

Nonchemical metal cleaning wastes

Scrubber discharge (if any)

Low volume wastes

- Boiler blowdown
- Ion exchange water treatment wastes (rinse and regenerants)
- Laboratory and sampling drains
- Yard and floor drains
- Water treatment clarification wastes

Coal pile runoff and leachate

Sanitary waste

TABLE 5.4-4

SELECTED POLLUTANTS OFTEN ASSOCIATED WITH POWER PLANT WASTE STREAMS
Page 1 of 2

| Stream | Pollutants | | |
|---|---|---|---|
| Cooling Tower Blowdown | TDS<br>Copper<br>Nickel<br>Chromium | Total Resid. Chlorine<br>Phosphorus<br>Beryllium | Chlorinated Organics<br>Zinc<br>Cadmium |
| Fly Ash Pond Overflow (and Leachate) | Arsenic<br>Boron<br>Chromium<br>Nickel | Silver<br>Zinc<br>Selenium<br>Copper | Cadmium<br>Mercury<br>Barium |
| Bottom Ash Pond Overflow (and Leachate) | Arsenic<br>Barium | Silver | Cadmium |
| Chemical Cleaning Wastes | Ammonia<br>Phosphorus<br>Beryllium<br>Copper<br>Nickel | Iron<br>Phenol<br>Cadmium<br>Lead<br>Silver | Manganese<br>Arsenic<br>Chromium<br>Zinc |
| Waterside Boiler Cleaning Wastes | Ammonia<br>Manganese<br>Turbidity<br>Arsenic<br>Chromium<br>Mercury<br>Silver | Chloride<br>Nitrate<br>Phosphorus<br>Zinc<br>Copper<br>Nickel | Iron<br>TDS<br>Phenol<br>Cadmium<br>Lead<br>Selenium |
| Fireside Boiler Cleaning Wastes | Iron<br>Chromium | Sulfate<br>Zinc | TDS |
| Air Preheater Cleaning Wastes | Ammonia<br>TDS<br>Chromium | Iron<br>Turbidity<br>Nickel | Sulfate<br>Phosphorus<br>Zinc<br>Copper |

**TABLE 5.4-4**
Page 2 of 2

| Stream | Pollutants | | |
|---|---|---|---|
| Boiler Blowdown | Phosphorus<br>Chromium | Copper<br>Iron | Oil & Grease |
| Boiler Feedwater Clarification Wastes | TSS<br>Turbidity | Iron<br>Phosphorus | TDS<br>Chromium |
| Boiler Feedwater Ion Exchange Wastes | Ammonia<br>Sulfate<br>Phosphorus<br>Mercury | Chloride<br>TDS<br>Chromium<br>Nickel | Nitrate<br>Turbidity<br>Copper |
| Water Treatment Wastes | Arsenic | | |
| Coal Pile Drainage (and leachate) | Ammonia<br>TDS & TSS<br>Chromium<br>Selenium<br>Zinc | Iron<br>Arsenic<br>Copper<br>Aluminum | Sulfate<br>Cadmium<br>Mercury<br>Nickel |
| Sanitary Waste | BOD<br>Phosphates | COD<br>Fecal Coliform | Nitrates<br>TSS |

TABLE 5.4-5

EFFLUENT GUIDELINES FOR POWER PLANT WASTEWATER DISCHARGE TO SURFACE WATERS



| Waste Stream[a] | Limitations[a] Suspended Solids (mg/l) | Oil & Grease (mg/l) | Total Copper (mg/l) | Total Iron (mg/l) | Other |
|---|---|---|---|---|---|
| Low Volume Wastes | 30 (max.)<br>100 (max.) | 15 (avg.)<br>20 (max.) | - | - | - |
| Fly Ash Transport Water | 30 (avg.)<br>100 (max.) | 15 (avg.)<br>20 (max.) | - | - | Zero discharge should be considered. |
| Bottom Ash Transport Water | 30 (avg.)<br>100 (max.) | 15 (avg.)<br>20 (max.) | - | - | Zero discharge should be considered. |
| Metal Cleaning Wastes | 30 (avg.)<br>100 (max.) | 15 (avg.)<br>20 (max.) | 1.0 (Max.) | 1.0 (max.) | - |
| Coal Pile Runoff | 50 (max.)[b] | - | - | - | |
| Cooling Tower Blowdown | - | - | - | - | Free available chlorine in no case to exceed 0.2 mg/l (avg.), 0.5 mg/l (max.); chlorination periods and concentrations maintained to minimum necessary to achieve biofouling control. (See Section 5.4.8 for temperature guidelines.) - |

TABLE 5.4-5
Page 2 of 2

| Waste Stream[a] | Limitations[a] Suspended Solids (mg/l) | Oil & Grease (mg/l) | Total Copper (mg/l) | Total Iron (mg/l) | Other |
|---|---|---|---|---|---|
| Cooling Tower[c] Blowdown (Cont'd.) | | | | | No discharge of 126 priority pollutants contained in circulating water additives, except: Total Chromium- 0.2 mg/l (max.) Total Zinc- 1.0 mg/l (max.) (see U.S. EPA Regulation 40 CFR 423) |
| Sanitary Waste | | | | | Secondary treatment, with the following effluent limits: TSS - 30 mg/l (30 day average), $BOD_5$ - 30 mg/l (30 day average), fecal coliforms $\leq$200/100 ml (Geom. mean). |

[a]All waste streams subject to the following limitations: pH, 6.0-9.0; no discharge of polychlorinated biphenyls (PCB's) such as those commonly used for transformer fluid. These limits apply to the individual waste stream categories listed in that permitted quantities of listed constituents in the discharge are obtained by multiplying listed concentrations by flow of the corresponding waste stream.

[b]For flows not exceeding the 10 year, 24 hour rainfall event.

# TABLE 5.4-6
# GUIDELINES FOR DRINKING WATER QUALITY
# (WORLD HEALTH ORGANIZATION - 1984)

## A. Microbiological and biological quality

| Organism | Unit | Guideline value | Remarks |
|---|---|---|---|
| **I. Microbiological quality** | | | |
| *A. Piped water supplies* | | | |
| *A 1 Treated water entering the distribution system* | | | |
| faecal coliforms | number/100 ml | 0 | turbidity < 1 NTU; for disinfection with chlorine, pH preferably < 8.0; free chlorine residual 0.2-0.5 mg/litre following 30 minutes (minimum) contact |
| coliform organisms | number/100 ml | 0 | |
| *A 2 Untreated water entering the distribution system* | | | |
| faecal coliforms | number/100 ml | 0 | |
| coliform organisms | number/100 ml | 0 | in 98% of samples examined throughout the year—in the case of large supplies when sufficient samples are examined |
| coliform organisms | number 100 ml | 3 | in an occasional sample, but not in consecutive samples |
| *A.3 Water in the distribution system* | | | |
| faecal coliforms | number/100 ml | 0 | |
| coliform organisms | number/100 ml | 0 | in 95% of samples examined throughout the year—in the case of large supplies when sufficient samples are examined |
| coliform organisms | number/100 ml | 3 | in an occasional sample, but not in consecutive samples |
| *B Unpiped water supplies* | | | |
| faecal coliforms | number/100 ml | 0 | |
| coliform organisms | number/100 ml | 10 | should not occur repeatedly; if occurrence is frequent and if sanitary protection cannot be improved, an alternative source must be found if possible |
| *C. Bottled drinking-water* | | | |
| faecal coliforms | number/100 ml | 0 | source should be free from faecal contamination |
| coliform organisms | number/100 ml | 0 | |
| *D Emergency water supplies* | | | |
| faecal coliforms | number/100 ml | 0 | advise public to boil water in case of failure to meet guideline values |
| coliform organisms | number/100 ml | 0 | |
| Enteroviruses | — | no guideline value set | |
| **II. Biological quality** | | | |
| protozoa (pathogenic) | — | no guideline value set | |
| helminths (pathogenic) | — | no guideline value set | |
| free-living organisms (algae, others) | — | no guideline value set | |

## B. Inorganic constitutents of health significance

| Constituent | Unit | Guideline value | Remarks |
|---|---|---|---|
| arsenic | mg/l | 0.05 | |
| asbestos | — | no guideline value set | |
| barium | — | no guideline value set | |
| beryllium | — | no guideline value set | |
| cadmium | mg/l | 0.005 | |
| chromium | mg/l | 0.05 | |
| cyanide | mg/l | 0.1 | |
| fluoride | mg/l | 1.5 | natural or deliberately added; local or climatic conditions may necessitate adaptation |
| hardness | — | no health-related guideline value set | |
| lead | mg/l | 0.05 | |
| mercury | mg/l | 0.001 | |
| nickel | — | no guideline value set | |
| nitrate | mg/l (N) | 10 | |
| nitrite | — | no guideline value set | |
| selenium | mg/l | 0.01 | |
| silver | — | no guideline value set | |
| sodium | — | no guideline value set | |

## C. Organic constituents of health significance

| Constituent | Unit | Guideline value | Remarks |
|---|---|---|---|
| aldrin and dieldrin | µg/l | 0.03 | |
| benzene | µg/l | 10[a] | |
| benzo[a]pyrene | µg/l | 0.01[a] | |
| carbon tetrachloride | µg/l | 3[a] | tentative guideline value[b] |
| chlordane | µg/l | 0.3 | |
| chlorobenzenes | µg/l | no health-related guideline value set | odour threshold concentration between 0.1 and 3 µg/l |
| chloroform | µg/l | 30[a] | disinfection efficiency must not be compromised when controlling chloroform content |
| chlorophenols | µg/l | no health-related guideline value set | odour threshold concentration 0.1 µg/l |
| 2,4-D | µg/l | 100[c] | |
| DDT | µg/l | 1 | |
| 1,2-dichloroethane | µg/l | 10[a] | |
| 1,1-dichloroethene[d] | µg/l | 0.3[a] | |
| heptachlor and heptachlor epoxide | µg/l | 0.1 | |
| hexachlorobenzene | µg/l | 0.01[a] | |
| gamma-HCH (lindane) | µg/l | 3 | |
| methoxychlor | µg/l | 30 | |
| pentachlorophenol | µg/l | 10 | |
| tetrachloroethene[d] | µg/l | 10[a] | tentative guideline value[b] |

## C. *(continued)*

| Constituent | Unit | Guideline value | Remarks |
|---|---|---|---|
| trichloroethene[d] | µg/l | 30[a] | tentative guideline value[b] |
| 2,4,6-trichlorophenol | µg/l | 10[a,c] | odour threshold concentration, 0.1 µg/l |
| trihalomethanes | | no guideline value set | see chloroform |

[a] These guideline values were computed from a conservative hypothetical mathematical model which cannot be experimentally verified and values should therefore be interpreted differently. Uncertainties involved may amount to two orders of magnitude (i.e., from 0.1 to 10 times the number).

[b] When the available carcinogenicity data did not support a guideline value, but the compounds were judged to be of importance in drinking-water and guidance was considered essential, a tentative guideline value was set on the basis of the available health-related data.

[c] May be detectable by taste and odour at lower concentrations.

[d] These compounds were previously known as 1,1-dichloroethylene, tetrachloroethylene, and trichloroethylene, respectively.

## D. Aesthetic quality

| Constituent or characteristic | Unit | Guideline value | Remarks |
|---|---|---|---|
| aluminium | mg/l | 0.2 | |
| chloride | mg/l | 250 | |
| chlorobenzenes and chlorophenols | — | no guideline value set | these compounds may affect taste and odour |
| colour | true colour units (TCU) | 15 | |
| copper | mg/l | 1.0 | |
| detergents | — | no guideline value set | there should not be any foaming or taste and odour problems |
| hardness | mg/l (as $CaCO_3$) | 500 | |
| hydrogen sulfide | — | not detectable by consumers | |
| iron | mg/l | 0.3 | |
| manganese | mg/l | 0.1 | |
| oxygen—dissolved | — | no guideline value set | |
| pH | — | 6.5–8.5 | |
| sodium | mg/l | 200 | |
| solids—total dissolved | mg/l | 1000 | |
| sulfate | mg/l | 400 | |
| taste and odour | — | inoffensive to most consumers | |
| temperature | — | no guideline value set | |
| turbidity | nephelometric turbidity units (NTU) | 5 | preferably <1 for disinfection efficiency |
| zinc | mg/l | 5.0 | |

## E. Radioactive constituents

| Constituent | Unit | Guideline value | Remarks |
|---|---|---|---|
| gross alpha activity | Bq/l | 0.1 | (*a*) If the levels are exceeded more detailed radionuclide analysis may be necessary. (*b*) Higher levels do not necessarily imply that the water is unsuitable for human consumption |
| gross beta activity | Bq/l | 1 | |

## 5.5 BASIS OF DESIGN ANALYSIS

### 5.5.1 Plant Layouts

General arrangement drawings for the power block area have been generated for this feasibility study to demonstrate the manner in which equipment and components sized per the requirements of the system descriptions in Section 5.5.4 may be arranged to provide an efficient design. Particular attention has been paid to those components affected the most by the use of Lakhra coal as a fuel. The components are the boiler, precipitator, coal silos and draft fans.

The physical layout of the Lakhra 2 x 350 MW power plant is shown on Figures 5.5.1-1 through 5.5.1-5 located in Volume VII. The layout has been based on the use of enclosed structures for the turbine room, control room and shop areas with an open boiler room design using a roof and top level canopy included for weather protection. The buildings are steel frame structures with insulated metal siding for enclosure and built up type roofing.

The remainder of this section discusses the turbine room, heater bay, boiler room, control room, precipitator area sizing considerations and plant maintenance provisions in detail.

#### 5.5.1.1 Turbine-Generator Area

One of the main factors affecting the overall turbine-generator area dimensions is the need to completely disassemble the turbine-generator and provide adequate space for all turbine parts. A clear area approximately four times that area occupied by the outline of the turbine-generator support pedestal allows sufficient space to perform this function. For the Lakhra unit, the machine used to set size requirements was a Westinghouse 350 MW tandem compound two flow, 3000 rpm, 50 Hz machine. The width, or bridge crane span, for this unit has been set at 45 meters to facilitate the removal requirements of the low-pressure heater bundle in the condenser neck and provide adequate access around the width of the turbine foundation. The turbine-generator area width has been set such that condenser retubing and removal of the low pressure heater bundle in the condenser neck will be performed through removable wall panels. With the establishment of the turbine crane span, the length of the turbine-generator area is roughly determined using laydown requirements, as set forth above, being certain that steam piping on the turbine end has sufficient space along with generator rotor removal on the opposite end. Using the above guidelines, the building volume developed is sufficient to logically and economically locate the auxiliary equipment

required by the turbine and the various associated systems within the confines of the building proper.

The minimum distance between the operating floor and the crane hook has been set to allow adequate lifting clearances for components. The minimum height between the operating floor and the ground or basement floor is designed to accommodate the condenser (the neck and low pressure heater arrangement, the height of the water boxes), the turbine pedestal design, and sufficient piping space including headroom clearance. The condenser is set so that the lowest extremity will be situated above the ground floor.

An equipment removal bay in the turbine-generator area between units has been included to provide access to the grade for the turbine room crane. Both Unit 1 and Unit 2 will have crane access to the turbine well for maintenance without interfering with the other unit. Turbine-generator area auxiliaries are arranged for a minimum amount of piping back-tracking and overlapping. The left (boiler) side of the machine has been set aside for the steam seal feed system and the right side has been set aside for steam seal drains and the turbine lube oil system. The low pressure heater extraction points exit from the low pressure turbine cylinders on the right. Condenser retubing and condenser neck heater removal spaces are on the right side of the machine. The condenser retubing will require removal of the building siding in an area below the mezzanine floor.

1. Major equipment located on the ground floor includes:

    a. Condenser vacuum pumps

    b. Service water cooling equipment

    c. Condensate pumps

    d. Cycle clean-up equipment and water laboratory

    e. House service air compressors

    f. Diesel generator

    g. Seal oil unit.

2. Major equipment located on or above the mezzanine floor includes:

    a. Switchgear and battery rooms

b. Electro-hydraulic equipment

c. Steam-gland condenser

d. Generator load break switch

e. Main stop and control valves

f. Turbine lube oil equipment

g. Generator bus duct and related equipment.

3. Most of the building volume contained between the mezzanine and operating floor levels will be used for piping, valve stations, and electrical tray and conduit runs.

4. The operating floor level has been left clear for maintenance and laydown purposes. Only two low pressure feedwater heaters and access hatches for equipment below the operating floor share this level with the turbine generator.

5.5.1.2 Heater Bay

The major purpose of the heater bay is to house or support the components of the boiler feedwater cycle, such as high pressure heaters and deaerator, in such a position within the station as to afford the most economical piping and equipment arrangement possible. Other benefits realized by the development of this area are:

1. Dedicated space established for horizontal and vertical runs of pipe and cable trays.

2. The development of a thoroughfare on the ground floor interconnecting vital equipment with the machine shop and repair facilities, the railroad unloading bay, and the outside road system.

3. Space to locate miscellaneous subsystem tanks and equipment.

The heater bay width has been set to accommodate room for the motor driven boiler feed pumps and an access aisle at the grade level. Heater bay width is also adequate to allow for access around the deaerator and storage tank above the operating floor level.

The length of the heater bay is dictated by the length of the turbine-generator area and the width of the boiler area. As a

minimum, the length should allow shell removal with a minimum of ten feet between opposing heater heads. The layout used locates the head ends (feedwater connection ends) of the heaters adjacent to each other. The bay is extended to support stairway or elevator landings and walkways.

The height of the heater bay is arranged primarily to serve the feedwater heating equipment. Floor levels in the heater bay match floor levels in the turbine-generator area, with all heaters being located at or above the operating floor. The various stages of heating are arranged such that drains will cascade under low loads. Much needed space for valve stations, horizontal chases for piping and electrical runs, and the maintenance aisle at the ground floor level is provided by keeping the area below the operating floor clear of major equipment. The first level above the operating floor supports the deaerator storage tank and its heater section.

General Location of Equipment

1. Major equipment located on the ground floor includes:

    a. Motor driven boiler feed pumps

    b. Miscellaneous valve stations

    c. Main maintenance aisle.

2. Major equipment located on the mezzanine floor includes miscellaneous valve stations.

3. In general, space beneath the mezzanine and operating floors will provide designated areas for items such as miscellaneous piping runs, valve stations, and electrical trays.

4. Major equipment located on the operating floor includes:

    a. High pressure feedwater heaters

    b. Offices, etc. associated with the plant control room.

5. Major equipment located on the first level above the operating floor includes the deaerator storage tank.

6. Major equipment located in the upper floor includes:

    a. Deaerating heater

    b. Miscellaneous tanks.

5.5.1.3 Boiler Area

The boiler is situated such that the furnace section (front) faces the turbine-generator and heater bay areas, and the gas exits through the rear. The boiler area includes the "in-plant" coal storage system.

To assure the elimination of interferences, to provide an economical piping arrangement, and to help isolate relatively dirty areas from the balance of the plant, the coal pulverizing equipment is located on the side walls of the boiler. The side location eliminates congestion of coal silos and pulverizing equipment sharing an area with feedwater piping equipment which is encountered with a front wall silo arrangement and shortens the primary air ductwork.

The considerations which were made for the boiler room layout centered about the accurate sizing of the furnace required to burn Lakhra lignite. The low heating value, slagging and fouling potentials of this fuel result in a boiler size which is more typical of a 600 MW rather than a 350 MW unit. Input was solicited from Combustion Engineering Corp., Babcock & Wilcox Co. and Foster-Wheeler Energy Corp. regarding boiler sizing.

The information received independently from these boiler vendors compared very well. The height of the furnace for the Lakhra unit has been set at 60 meters from the outlet of the ash hopper to the centerline of the boiler drum. The furnace width is 18.3 meters and the furnace depth is 15.3 meters. The total boiler depth from the front wall water walls to the rear wall in the reheat and economizer sections is 29 meters. The vertical dimension from economizer outlet centerline to ash hopper outlet is 31 meters.

The combustion air heaters shown for the Lakhra unit layout are the trisector type which combines heating of primary and secondary air into one piece of equipment. The boiler specifications will and the layout does, however, allow separate primary and secondary air preheaters. The heaters were sized to use a maximum combustion air velocity of 12 m/s (40 ft/sec) and placed at an elevation which optimized heater access from main boiler room floor levels and provided simple ductwork turns into the heaters and out to the precipitators.

The overall width of the boiler area is that dimension required to encompass the boiler-related extremities; i.e, long retractable soot blowers, gas or air ductwork, and miscellaneous downcomer piping. In general, the minimum width is set at twice the distance between side waterwalls plus twenty feet, which will allow approximately five-foot clear aisles outboard the

retractable soot blowers on each side of the boiler. The above width does not include the "in-plant" coal storage area. This must be added to the above for final building width.

The use of pressurized pulverizers locates the silo outlet flange elevation above the feeder floor. As a rule, this dimension is 15 feet.

A minimum of seven silos (one per pulverizer) are indicated for the "in-plant" storage system and are designed for 8 hours of lignite storage. This storage capacity is less than that normally used for in-plant storage but minimizes residence time in an uncompacted condition and thus lowers the potential of lignite self-ignition. Two trippers with single chutes were selected for the illustrated silo loading device at each row of silos and will receive coal from a transfer tower, which is part of the boiler structure. As-fired sampling will take place in this tower.

Provisions for the routine inspection and maintenance necessary for the continuous operation of the steam generator dictate the location, size, and quantity of the boiler area platforming. The majority of the walkways will be grating, with the use of concrete in the case of the coal feeder floor.

Two elevators will be supplied: one passenger elevator 1,000 kg capacity (2,200 lb.) and one freight elevator 5,000 kg capacity (11,000 lb.). The boiler area is also served by a hoistway for removal or replacement of items such as soot blower lances and major valves.

As a general rule, the platforms will be arranged to provide a minimum clear walkway of five-foot width around the equipment in the upper boiler area. In the case of blind walkways for observation ports and access doors, a minimum width of three feet will be held. Platform levels tie in directly to elevator stops, permitting the use of wheeled equipment, welding machines, dollies, oxyacetylene equipment, hand trucks, and other equipment.

General Location of Equipment

1. Major equipment located on the ground floor includes:

    a. Pulverizers and their associated auxiliaries

    b. Boiler area switchgear rooms

    c. Ash hopper and associated piping

d. Forced draft fans

e. Air preheat steam coils

2. Due to the height of the pulverizers and their maintenance plan, most of the boiler area will not have a mezzanine level as such, except for those platforms required to service instrumentation equipment, duct access doors, miscellaneous valve stations, air heater lower bearings, primary air ductwork, etc.

3. The only major equipment on the operating floor is the coal feeders.

4. Major equipment located above the "operating" or "coal feeder" floor level includes:

   a. Burners and burner windboxes

   b. Primary and secondary air ductwork

   c. Gas ductwork

   d. Air heaters

   e. Silos

   f. Silo loading equipment

   g. Coal system transfer tower and conveyor bridges

   h. Sootblowers

5.5.1.4 Control Complex

The control complex consists of (from top to bottom): the control room and computer area, the relay and electronics room, the cable spreading area, and the area for the auxiliary equipment required for environmental control. The complex is centrally located between the initial and future units. During design, decisions on the control system normally lag structural and mechanical work; therefore, a location just off the heater bay was selected so that its design and erection would not influence or deter the boiler or turbine-generator area steel erection schedule.

Sizing

A clear column-free area in excess of 2,500 square feet comfortably houses the control boards. The computer area and

results center room are partitioned off from the control room and occupy approximately 1,900 square feet. A two-foot high "floating floor" under the entire area places all control boards and computer equipment above the concrete base floor and establishes horizontal cable raceways. This method of construction eliminates the complicated form work and steel framing required to support control boards directly off the concrete deck and makes possible a time-saving in the construction of this area. A shift supervisor's office, conference room, lavatories, lunchroom, electronic repair shop, and record storage rooms are all located adjacent to the control room area. The total combined area of the control room and its accompanying facilities is approximately 5,800 square feet.

Below the control room and occupying the entire area are the relay, electronic, and termination cabinets.

A cable spreading room is located below the relay and electronics room. These floors are connected by a two-hour fire-rated stairway.

The chiller equipment for the environmental control of the entire control complex is located on the ground floor.

Also on the ground floor is the machine shop. This location was selected to shorten travel distances of fork lifts and hydraulic cranes to equally service two units. The maintenance activity is centralized in an effort to reduce repair time.

5.5.1.5 Flue Gas Treatment Area

The layout and sizing of the precipitators required for the Lakhra coal unit was prepared to account for the specific gas volumes, ash quantities and ash resistivity that will be encountered with the combustion of this fuel. The precipitator for unwashed coal is designed for a specific collection area of 100 square meters per cubic meter per second (508 square feet per thousand ACFM) of gas. The maximum design gas velocity is 1.37 m/s (4.5 ft/sec). The total precipitator depth from inlet to outlet flange is 32 meters (105 feet). This depth accommodates six collection fields. The precipitator is designed to meet all performance guarantees with any one of the six fields out of service.

The physical layout of the precipitator is designed to provide the most direct gas path from air heaters to induced draft fans with a minimum of flow losses and the best balance of losses between individual chambers. The layout also minimizes the height of the precipitator above grade and optimizes the service access to ash hoppers and removal piping.

### 5.5.1.6 Coal Analysis Laboratory

The Lakhra coal-fired unit will be the first major coal-fired unit in the country. As a result, special attention must be paid to the laboratory facilities that will be included with the plant design to accurately analyze coal fuels. A preliminary layout of coal preparation and analysis facilities has been made and is shown on Figure 5.5.1.6-1 which is attached to this section. As this figure shows, approximately 150 square meters (1600 square feet) of space is required for these facilities. It is anticipated that the coal laboratory will be included in the technical support center which is located adjacent to the turbine room.

The tests that the coal laboratory will be expected to run are as follows:

1. Moisture (ASTM D-3173)
2. Ash (ASTM D-3174)
3. Volatile Matter (ASTM D-3175)
4. Sulfur (ASTM D-4239)
5. Btu (ASTM D-2015)
6. Ash Fusibility (ASTM D-1857)
7. Sodium in Coal Ash (part of ASTM D-3682)
8. Carbon and Hydrogen (ASTM D-3178)
9. Chlorine (ASTM D-4208)
10. Nitrogen (ASTM D-3179)
11. Hardgrove Grindability Index (ASTM D-409)
12. Equilibrium Moisture (ASTM D-1412)
13. Sulfur Forms (ASTM D-2492)
14. Soluble Alkali (by standard industry practice)
15. Mineral Analysis of Ash (ASTM D-3682)
16. Sulfur in Coal Ash (ASTM D-1757)
17. Specific Gravity (by standard industry practice)

FIGURE 5.5.1.6-1

COAL LABORATORY
AND
SAMPLE PREPARATION
AREA

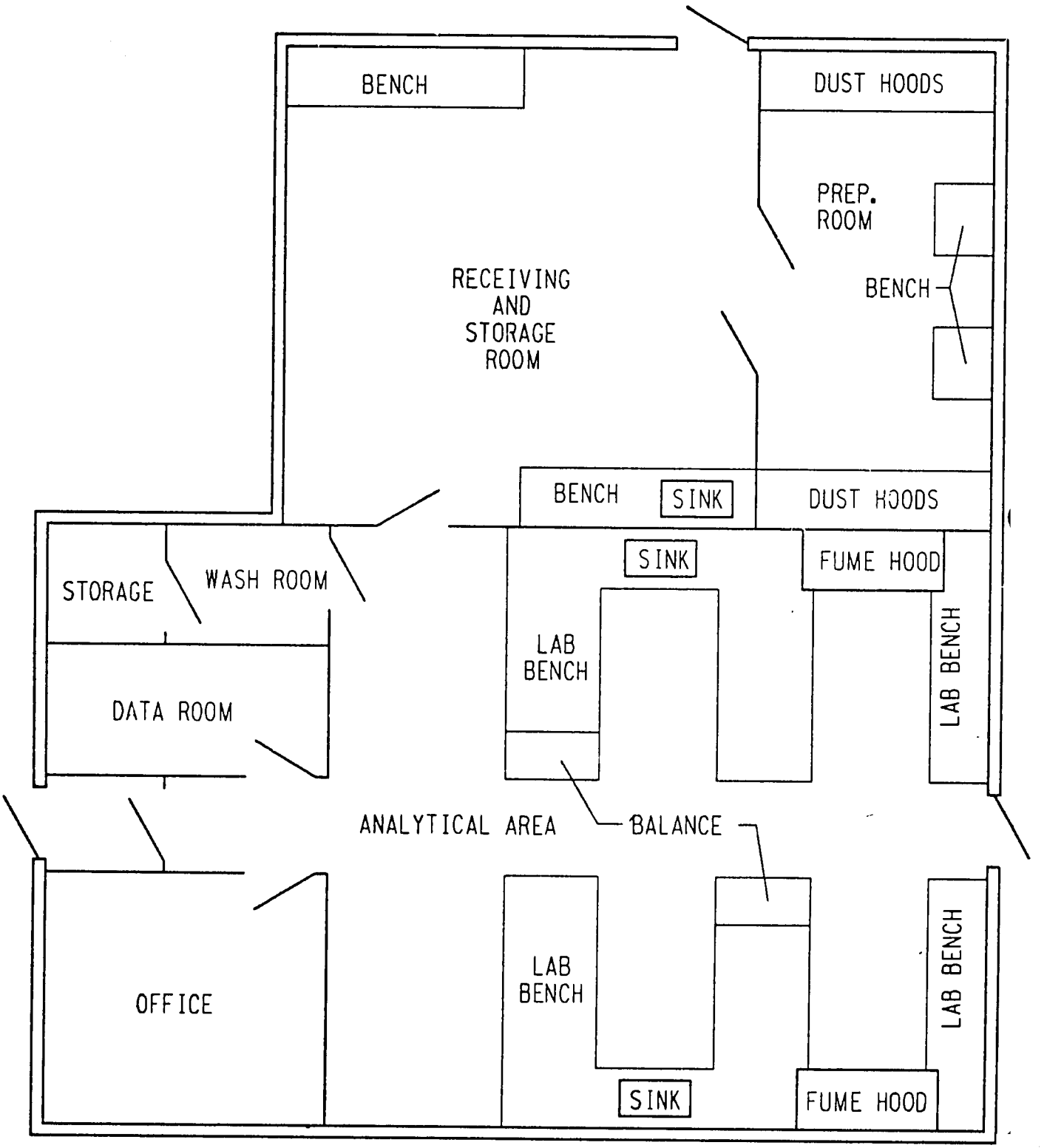

18. Screen Tests (ASTM D-410)

19. Float-Sink Tests (ASTM D-4371)

The anticipated equipment list and space requirements for the coal analysis laboratory equipment are shown below:

| Item | Approximate Size Width x Depth x Height |
|---|---|
| Moisture Oven | 1-1/2 ft. x 1-1/2 ft. x 2 ft. |
| Analytical Balance | 1 x 1-1/2 x 1-1/2 |
| Balance Table | 3 x 2 x 2-1/2 |
| Calorimeter (and related equipment) | 3 x 2 x 2 |
| Water Cooler | 2 x 1 x 2 |
| Water Heater | 2 x 1 x 2 |
| Furnace #1 | 1/2 x 1/2 x 1 |
| Furnace #2 | 2 x 2-1/2 x 2 |

| Item | Approximate Size Width x Depth x Height |
|---|---|
| Sulfur Analyzer | 3 x 2-1/2 x 2-1/2 |
| Fume Hood | 6 x 2-1/2 x 5 |
| Sample Crusher | 2 x 2 x 3-1/2 |
| Splitter #1 | 2 x 1-1/2 x 4 |
| Pulverizer | 2 x 1-1/2 x 1-1/2 |
| Splitter #2 | 1-1/2 x 1 x 2 |
| Air Dry Oven | 3 x 2-1/2 x 7 |
| Mixing Wheel | 1 x 2-1/2 x 2-1/2 |
| Top Loading Balance | 1 x 1 x 1 |
| Air Compressor | 2 x 2 x 4-1/2 |
| Trash Can | 30 gallon |

5.5.1.7 Maintenance

Power Block

Considering the variety of maintenance tasks associated with a plant of this size, the following suggests some of the major equipment needed to assist in the routine performance of duties:

1. Fork lift trucks, hand and motor operated, ranging in capacity from 1,000 to 3,000 kg (with hook accessory).

2. Hydraulic cranes, motor driven, capacity range from 10,000 to 15,000 kg.

3. Truck crane of approximately 25 to 40 ton capacity.

4. Portable "light-weight", assembled-in-place "A" frame monorails with casters, approximately 3 to 10 ton capacity.

In many cases special rigs will be developed in order to save time and labor.

Turbine Area Operating Deck

A bridge crane, capable of handling the heaviest piece after erection, will provide the means to completely disassemble the turbine-generator. The bridge crane traverses the full length of the turbine room and allows access to storerooms, machine shop, etc., from the railroad bay.

Other items using the turbine area bridge crane for overhaul are:

1. Generator hydrogen coolers

2. Condensate pumps (access through hatches)

3. Turbine lube oil coolers and pumps (access through hatches)

4. Low pressure feedwater heaters (3 and 4)

Turbine-Generator Area Mezzanine Floor

Space has been allotted in front of the low pressure feedwater heaters that are mounted in the condenser neck for their tube bundle removal. Space for the positioning of a truck or crawler crane at grade has been allotted for the removal of the heater tube bundle from the building.

Dollies or small hand-pushed fork lifts can be taken through the switchgear room to the battery rooms for cell change or transfer.

Turbine-Generator Area Ground Floor

Generally sufficient space is allowed around the major machinery to permit the use of a small fork lift vehicle (forks removed and outfitted with a lifting rig) to remove motors, motor rotors, horizontally split pump casings, small heat exchangers, and other machinery whose weights warrant mechanized lifting. In tighter areas small assembled-on-the-spot A-frame monorails may be used.

Permanent monorails are installed in some instances for maintenance: air compressors, condenser water box removal, etc. Laydown and retubing space is allotted near this equipment for overhaul. An area outside the turbine-generator area wall is kept clear for condenser tube handling and a section of the outside wall is removable for the condenser retubing operation. Equipment outside the building is arranged so that a truck crane can place condenser tube cartons near the work area.

Heater Bay Upper Elevations

Equipment in the upper levels of the heater bay are generally served by small platform areas or walkways. For those levels above the operating floor, access will be provided to the deaerating heater, miscellaneous small tanks, valve stations, pipe hangers or stabilizers (requiring adjustment and checking), ventilating fans, and miscellaneous electrical equipment.

Provision is made and space allotted for the maintenance and removal of the deaerating heater following the procedure indicated below:

1. Suitable shoring is built up at an end of the heater bay from the turbine-generator area floor to the heater floor level (placed by the turbine bridge crane).

2. The heater is burned free of piping, unbolted from the floor, and winched on suitable cribbing from the heater bay to the shored area, then located so that the bridge crane's main hook is over the heater's center of gravity.

3. With suitable rigging, the heater is then lifted from the shored platform and taken to the turbine railroad access bay where it can be lowered to a waiting flat car or stored temporarily for pick-up later.

The new heater is installed by the reverse of the above procedure.

Miscellaneous valve stations and instrument racks will also be located in this area and have small maintenance platforms as required.

Heater Bay Operating Floor

This area supports the high pressure feedwater heaters. Provisions are made in the floor system and space has been provided for removal of the heater shells. In the event it would be more economical, an entire heater may be replaced since it can easily be winched to a lifting position under the turbine-generator area crane. The new heater can be set into winching position on the turbine-generator area deck and pulled into its final location in the heater bay.

Heater Bay Mezzanine Floor

This level has been kept clear of machinery to establish corridors for the various services: trays, pipe runs, instrument runs, etc.

This level should have little "heavy" type maintenance because of the absence of large machinery.

The mezzanine level provides access to the turbine mezzanine level to and from the boiler area, stair towers, and elevators. It also serves as access to the control complex cable spreading area, and relay and electronics rooms.

Heater Bay Ground Floor

The center of maintenance planning for the station is the heater bay ground floor. There is a sizable aisle running the length of the turbine-generator area parallel to the front of the boiler. The turbine access bay, the machine shop, and various aisles serving other areas of the plant are joined to this main aisle, allowing easy transit of portable maintenance equipment. The maintenance aisle is sized to permit passage of a hydraulic crane having a capacity of approximately 15 tons. In general, the heater bay below the operating floor level is primarily for the running of pipe, trays, instrument tubing, etc., and for the development of good access for heavy maintenance equipment. It also accommodates the three motor driven feed pumps which are maintained with mobile equipment from the aisle side.

Boiler Area Upper Elevations

Encircling the boiler at several levels will be platforms for access to soot blowers, observation ports, boiler drum, access doors, and burners. The platforms are served by two elevators, one in the right front corner of the boiler area, (1,000 kg capacity), and a freight elevator (5,000 kg capacity) in the left rear corner of the boiler area. Other than retubing sections of the boiler, the routine maintenance will include the servicing of the soot blowing equipment, instrumentation equipment and miscellaneous control equipment. There will be some periodic greasing required, especially of the coal handling equipment.

An open hatch from the ground floor to the underside of the boiler area roof is provided for the replacement of the long retractable soot blowers.

Fireside tube cleaning is performed by the use of cable suspended scaffolding inserted in the furnace through the door just above the ash hopper. Winch cables inserted through the boiler roof will raise and lower the scaffolding as required.

To service the coal conveyor system (in the boiler area) monorails are mounted over the conveyor drive and speed reducers to permit lowering or raising the damaged or repaired equipment outside the building confines. Suitable walkways give access to idlers, control switches, instruments, and belts.

Burner cleaning, nozzle observation, light-off oil gun cleaning, instrument and control checking, greasing of secondary air damper bearings, and checking and servicing of damper operators are performed from the burner platform levels and/or suitable walkways.

General maintenance on the air heaters will consist of element washing, seal adjustment, bearing inspection, cold end basket inspection, and bearing lube oil pumps inspection and adjustment. Other major maintenance will consist of cold end basket, guide bearing, and thrust bearing replacement. Cold end baskets will be removed from the air heater housing by winching. They will be handled by a monorail and lowered to grade level. "Hot end" basket removal is infrequent and major in nature. The baskets are removed via the inlet gas duct. Provisions are made for removal of "hot-end" baskets by allowing for space required to perform this task, should it ever be necessary.

## Boiler Area Coal Feeder Floor

A concrete floor supports the coal feeders for the purpose of containing a coal spill resulting from the maintenance of this apparatus. Routine maintenance will be greasing and operation inspection. Replacing the feeder belt, bearings, or rollers or removal of foreign bodies will take the feeder out of service and require the removal of its coal. Ample space is available to perform these operations.

Removal of coal from the silo may be accomplished by running down the remaining supply without refilling or closing the valve at the base of the silo hopper, removing the feed pipe and, through the use of a portable conveyor, conveying the coal from the hopper to a chute which will place it in a truck in the mill maintenance aisle.

Additional equipment such as switchgear, control centers, and feeder control cabinets located on this floor have no special provisions for their maintenance other than sufficient width aisles and openings to permit removal and replacement of the largest part.

## Boiler Area Ground Floor

Most of the large auxiliary equipment is found on the ground floor; therefore, it accommodates the bulk of heavy maintenance requirements. Examples of this are the FD fans and the coal pulverizers. It is planned (in the case of bowl mills) to have one spare pulverizer per unit so that full load can be maintained while one pulverizer is disassembled for overhaul.

A large aisle beside the pulverizers is provided to permit the access of a mobile hydraulic crane (cherry picker). The capacity is determined by the weight of the pulverizer parts to be handled and the practical positioning of the selected vehicle. This aisle connects with the main maintenance aisle in the heater bay.

Suitable platforming allows routine inspection, greasing, adjustment of roll spring tension, and classifier coal valve settings and adjustment on the pulverizer.

Examples of maintenance requiring pulverizer shutdown would be roll and/or roll journal replacement, bull or grinding ring replacement, replacement of classifier wear plates, removal of bull or grinding ring drive gear and worm or gear box, removal of oil cooler, removal of the entire classifier assembly, drive motor problems, and lube oil system component failures.

Auxiliary equipment requiring maintenance but involving the bowl mills only is the pyrites collecting and conveying system. Periodically, conveyor piping must be replaced, and valves must be checked and greased. Since the pyrites are generally conveyed hydraulically, an occasional replacement of the water jet nozzles may be required.

Maintenance of forced draft and primary air fans is required. This involves routine greasing, occasional checking and/or greasing of the damper mechanisms and actuators, and seal air system checking. Major maintenance includes wheel removal or balancing, bearing replacement, and drive motor problems which can be handled by a fork lift truck in the areas provided.

Routine maintenance of the ash hopper, which would not shut down the unit, involves miscellaneous equipment checking and greasing (clinker grinder, slide gates, motor-operated valves).

Major maintenance involving the ash hopper includes replacing conveyor piping, clinker grinder rolls, replacing or resetting doors, and replacing masonry internals.

Provisions are made for the maintenance of the switchgear located on this floor by assuring sufficient aisle space and door widths to permit removal and/or installation of the largest normally replaceable item.

Control Complex

The components in the control systems are small and can generally be handled by an individual; therefore, no special provisions are made for maintenance other than to set up a repair shop nearby for instrument work.

Instrument calibration and computer component testing may require a portable wheeled instrument rack, along with certain specialized tools, to perform required maintenance. This would be stored in the electronic repair shop and wheeled to the test position as required. A ramp, permitting access to the control and computer rooms, is provided for computer modifications and additions.

Maintenance of the air moving equipment includes periodic greasing, checking and testing damper operators and the miscellaneous control equipment. Major maintenance includes fan rotor and motor removal or journal replacement, and heat exchanger repair or replacement.

Maintenance of the liquid chilling equipment includes periodic greasing of miscellaneous pumps, lubrication of motor-operated

valves, and checking and testing of control equipment. Major maintenance includes heat exchanger bundle or tube removal, and pump seal, impeller, or motor troubles.

Bearing wear warrants a continual check on machinery of this size. Some motor manufacturers supply access plates positioned such that air gaps can be inspected to help ascertain impending problems.

The fan silencer (if installed) requires no maintenance except for the possible removal of debris from the protective screening.

Major maintenance includes blade replacement. A monorail system is provided for this maintenance and the fan housing is generally constructed with movable sections to facilitate this work.

Replacement of lube oil console parts, such as drive motors, pump, or seals, and heat exchanger repairs would shut down the fan and therefore constitute major maintenance. Sufficient space exists to permit part handling with a fork-lift truck.

The plant arrangement provides maintenance access in the vicinity of the forced draft fans for a portable crane (cherry picker) or a truck crane.

Electrostatic Precipitator

During normal operation most of the problems associated with this equipment are centered around the hoppers, with attention focused on keeping the dust from hanging up in the hoppers or the dust-conveying piping.

General maintenance includes periodic checking and lubricating, as required, of the miscellaneous solenoids, air actuators and associated linkage, hopper heaters, dust feeder mechanisms, and vibrators. If a high dust level is encountered, more drastic means of "loosening" hopper hangups must be taken. Platforms permit rodding through poke holes and sledge hammering on provided striker plates.

### 5.5.2 Soils/Rock, Water, Climate Characterization

Listed below are descriptions of the soils, water and climatological/meteorological data that have been accumulated during the course of the Lakhra Feasibility Study. This information has been collected both through literature searches and investigations/testing carried out by GCII during the course of the study.

#### 5.5.2.1 Soils/Rock

The results of the GCII subsurface investigation and testing program are submitted as a supplemental report in Volume VIII.

The subsurface conditions at all the potential sites are similar from a geologic standpoint. All are located in the Laki formation of early Eocene age. The rocks of this formation are mostly limestone, some marl and shale. Sandstone and lateritic clay are also interbedded in this formation, particularly at the Lakhra site. The limestone is mostly soft to hard, and highly fractured and weathered. Massive, chalky, soft-nodular limestones are common in Jamshoro and Khanot. Solution cavities are frequently found inside the limestone. They are filled mainly with calcareous clayey materials. All three sites are relatively level and require minimal site development work. The overburden soils are generally less than 1 meter in thickness at Jamshoro and Khanot and less than 3 meters at Lakhra. Permeability in limestone is high due to the highly fractured condition and high content of granular overburden soils at the Jamshoro and Khanot sites. No areas of voids or subsurface caverns were encountered, however.

Based on the results of the geological and seismic evaluations, the potential horizontal ground acceleration is estimated to be on the order of 0.08 g for the Jamshoro and Khanot sites. The potential horizontal acceleration at the Lakhra site is estimated to be on the order of 0.14 g. Design of foundations and structures for comparison should, therefore, be incorporated with the seismic condition at each site.

The presence of shales, clay inside the limestone cavities, and intermittent thin clay seams within the rock provide some distinguishing features among the sites. Although the recommended bearing values at Lakhra will be somewhat lower than the other sites, all of the sites exhibit bearing capacities on rock in the range of 4 to 5 kg per square centimeter (8 to 10 Kips per square foot). These bearing values will allow the use of shallow mat foundations or spread footings at each of the sites. Shallow drilled piers or rock anchors are the

recommended foundation types to support the structures subjected to lateral and/or uplift forces.

5.5.2.2 Water

Information about ground water at the three initial sites and surface water (i.e., Indus River) was obtained through literature searches and by direct sampling, testing, and observation at the soil borings that were done on the sites. Information also was gathered from the work done by the J. T. Boyd Company for the Lakhra mine area. Results from geo-electric studies for ground water investigations in the flood plain area east of the Khanot site by WAPDA were also reviewed.

From the results of field investigations and other information gathered, it can be concluded that very little useable ground water is present at any of the three sites. Ground water in isolated or perched areas has been observed at the Lakhra mine site. However, this water is of generally poor quality and very small in quantity. At Khanot, ground water was observed in four of the bore holes at a depth of 4.6 to 13 meters. Work done by WAPDA for soils resistivity in the area concludes that fresh water supplies are minimal at Khanot and overlie a generally saline ground water table. At Jamshoro no ground water was observed in any of the borings made at that site.

Table 5.5.2-1 lists results of water quality analyses for ground water samples taken from borings at each site. This table demonstrates the high dissolved solids and sulphate content of the ground water at each site.

Water quality of the Indus River (Table 5.5.2-2) may be characterized as being high in suspended solids content, especially during high flow periods of the year.

Surface water is alkaline with a pH in the range of 7.3 to 9. Due to the high suspended solids concentration, slightly high sulphate content, and alkaline nature of the river water, it is recommended that a filter be installed in the system and that water be treated to minimize any scaling effect inside any plant components.

Surface water flow in the Indus River has been investigated to ensure that quantities are adequate for supply of the plant. The best data available regarding river flows also were taken from the monitoring station at Sehwan, which is approximately 85 kilometers northwest of Khanot. A summary of river flows over a period of 5 years is presented in Table 5.5.2-3. These data indicate that a minimum monthly average discharge of approximately 2,000 cusecs is present during the period of

late February and early March. This flow is far in excess of plant requirement, which is about 34 cusecs for the 2 x 350 MW plant, Lakhra, mine and residential colony.

5.5.2.3 Climate

The climate at all three of the sites is similar and may be characterized as warm and arid with annual precipitation ranging from only 15 to 22 centimeters. Minimum winter temperatures (January) approach 5°C, while maximum summer temperatures range from 35 to 50°C. Meteorological data gathered from the Hyderabad monitoring station, as summarized by WAPDA, is provided in Table 5.5.2-4.

TABLE 5.5.2-1

GROUND WATER QUALITY

| Test | Jamshoro | Khanot | Lakhra |
|---|---|---|---|
| Total Dissolved Solids | | 6050-6694 ppm | 465-1371 ppm |
| Sulphate ($SO_4$) | 1080-2760 ppm | 1197-1380 ppm | 155-615 ppm |
| Chloride (cl) | 35-175 ppm | | 20-34 ppm |
| pH | 7.8-8 | 7.2-7.8 | 7.4-7.8 |
| Bicarbonate ($HCO_3$) | 2.5-5 ppm | | 171-403 ppm |
| Calcium (Ca) | 15.5-67 ppm | | 104-240 ppm |
| Magnesium (Mg) | | | 4-40 ppm |
| Total Iron | | | 0-1 ppm |
| Manganese Dissolved | | | Nil |
| Suspended Solid | | | .02-.05 ml/l |
| Turbidity | | | 6-25 FTU |
| Sodium (Na) | 70.5-190 ppm | | 10-40 ppm |

TABLE 5.5.2-2

WATER QUALITY OF INDUS RIVER

| Test | Near Sehwan 1972 | 1973 | 1974 | 1975 | 1979 | At Khanot 1985 | |
|---|---|---|---|---|---|---|---|
| Total Dissolved Solids (ppm) | 140-304 | 170-310 | 170-370 | 172-296 | 17-300 | 236 | |
| Suspended Sediment Conc. (ppm) | | | | | | 8 | 140 |
| Spring | 130-540 | 33-3160 | 22-136 | 20-341 | 1790-3280 | | |
| Summer | 1070-4330 | 4450-6950 | 121-3070 | 1490-5620 | 2200-2560 | | |
| Fall | 2600-201 | 3720-149 | 4410-54 | 3460-21 | 2150 | | |
| Winter | 20-1080 | 12-285 | 50-325 | 55-170 | 100-1160 | | |
| *Ca | 1.12-1.69 | .82-2.0 | 1.1-2.11 | .77-2.13 | 1.3-2 | 44 | 1 |
| *Mg | .85-1.71 | .8-1.79 | 0.6-3.29 | .83-3.15 | .7-1.1 | 20 | 40 |
| *Na | .15-1.80 | .31-2.30 | .55-2.37 | .59-1.98 | 9.2-2.8 | | 35 |
| *$CO_3$ | 0 | 0-.72 | .37-.74 | .17-.34 | 0 | Nil | |
| *$HCO_3$ | 1.41-2.92 | 1.68-2.41 | 1.71-3.16 | 1.53 | 3.56 | .8-1.8 | 88 |
| *Cl | 0.64-1.57 | .47-1.65 | .76-1.72 | 0.96-1.57 | 1.4-2 | 164 | 34 |
| *$SO_4$ | .19-.95 | .41-1.48 | .09-2.47 | .09-1.53 | .1-2.1 | 140 | 53 |
| Total Cations (me/l) | 2.4-4.75 | 2.4-5.15 | 1.05-5.86 | 1.05-5.86 | 2.9-5.66 | 2.3-5.2 | |
| Total Anions (me/l) | 2.45-4.97 | 2.40-5.15 | 1.05-5.86 | 2.9-5.66 | 2.3-5.2 | | |
| pH (units) | 8.3-8.6 | 7.7-9.0 | 7.4-8.5 | 7.5-8.3 | 7.9-8.2 | 7.3 | 7.8 |
| Sodium Absorption Ratio (SAR) (me/l) | 0.13-6.6 | | | .45-1.6 | .1-2.7 | | |
| Iron, Total | | | | | | Nil | Nil |
| Manganese, Total | | | | | | Nil | Nil |
| Turbidity | | | | | | 5ppm | 75 FTU |

*Values for parameters indicated by an asterisk (*) are given in milliquivalents/liter (me/l) for Sehwan and in parts per million at Khanot.

TABLE 5.5.2-3

DISCHARGE CHARACTERISTICS OF INDUS RIVER AT SEHWAN
FOR THE YEARS 1972-75 AND 1979[a,b]

MONTHLY AVERAGE DISCHARGE (CUSECS)

| | Jan. | Feb. | March | April | May | June | July | Aug. | Sept. | Oct. | Nov. | Dec. |
|---|---|---|---|---|---|---|---|---|---|---|---|---|
| 1972 | 6,010 | 2,350 | 1,520 | 5,370 | 20,000 | 82,400 | 224,000 | 136,000 | 62,000 | 7,640 | 2,740 | 2,490 |
| 1973 | 13,400 | 2,170 | 1,160 | 21,000 | 57,600 | 159,000 | 396,000 | 497,000 | 305,000 | 51,900 | 11,800 | 7,120 |
| 1974 | 18,200 | 6,440 | 2,330 | 73,200 | 9,230 | 34,200 | 70,300 | 93,400 | 12,000 | 7,230 | 2,760 | 1,820 |
| 1975 | 9,220 | 1,950 | 1,250 | 2,060 | 12,600 | 54,600 | 135,000 | 249,000 | 312,000 | 31,800 | 4,990 | 3,870 |
| 1979 | 13,000 | 11,200 | 63,500 | 68,600 | 77,500 | 50,400 | 170,000 | 229,000 | 51,900 | 30,100 | 13,000 | ---- |
| AVE | 11,966 | 4,822 | 13,952 | 34,046 | 35,386 | 76,120 | 199,060 | 240,880 | 148,580 | 25,734 | 7,058 | 3,825 |

[a]Minimum daily discharge for period of record as follows:

Extreme Daily Minimum: 895 cusecs (for 7 consecutive days in April 1985)
Average of Extreme Daily Minimums for period: 1,363 cusecs

[b]Data from WAPDA Surface Water Hydrological Report (1960-1979)

TABLE 5.5.2-4

METEOROLOGICAL SUMMARY DATA FROM HYDERABAD (1931-1960)[a]

| Month | Max. Wind Velocity (m/sec.) | Wind Direction | Temp. (°C) Max. | Temp. (°C) Min. | Humidity (% at 5 AM) | Atmos. Press. (mm Hg) | Max. 24 Hour Rainfall (mm) | Mean Monthly Rainfall (mm) |
|---|---|---|---|---|---|---|---|---|
| Jan. | 3.7 | NW | 29.8 | 5.7 | 66 | 1014/1018 | 150.6 | 4.1 |
| Feb. | 3.4 | NW | 34.4 | 7.8 | 64 | 1011/1015 | 37.8 | 4.8 |
| March | 3.9 | SW | 39.9 | 11.2 | 63 | 1008/1012 | 58.4 | 1.0 |
| April | 5.7 | SW | 44.0 | 11.6 | 63 | 1004/1007.9 | 18.9 | 1.5 |
| May | 7.6 | SW | 46.8 | 22.9 | 70 | 1000.6/1003.3 | 54.4 | 4.1 |
| June | 9.3 | SW | 45.4 | 25.5 | 78 | 995.4/998.8 | 49.0 | 6.3 |
| July | 8.5 | SW | 42.2 | 25 | 79 | 994.2/997.6 | 190.5 | 68.1 |
| Aug. | 7.8 | SW | 39.9 | 24.7 | 79 | 996.4/999.8 | 129.0 | 43.7 |
| Sept. | 7.4 | SW | 41.6 | 22.9 | 81 | 1001.1/1004.5 | 157.2 | 14.7 |
| Oct. | 3.8 | SW/NW | 41.0 | 17.2 | 71 | 1007.6/1011.0 | 25.4 | 2.8 |
| Nov. | 2.7 | NW | 36.9 | 11.9 | 67 | 1011.9/1015.6 | 25.4 | 1.0 |
| Dec. | 3.0 | NW | 32.8 | 7.5 | 68 | 1014.4/1018.1 | 20.8 | 2.5 |
| | | | | | | | | 154.6 (6.1 inches) |

[a] Data from WAPDA Feasibility Study Report for Jamshoro, Unit 1.

## 5.5.3 Fuel, Chemical, Raw Material, Wastewater Requirements

### Fuel

Power plant fuel technical requirements are included in the fuel specification in Appendix A (Volume IV): Specifications for No. 2 Fuel Oil and No. 6 Fuel Oil are included.

Quantities of these fuels and their wastes are included in Appendix B (Volume VII), Figure 5.5.3-2, Material Balance Diagram.

### Chemical

Power plant chemical technical requirements and quantities are listed in the Chemical Specifications in Appendix A (Volume IV).

The following chemical specifications are included:

- Polyelectrolytes
- Aluminum Sulfate
- Chlorine
- Caustic Soda
- Sulfuric Acid
- Anhydrous Ammonia
- Lime
- Hydrazine Solution
- Trisodium Phosphate

### Raw Materials

Technical requirements for limestone for the wet flue gas desulfurization system are included in the Limestone Specification in Appendix A (Volume IV).

Quantities for limestone are included in the Appendix B (Volume VII), Figure 5.5.3-2, Material Balance Diagram.

### Wastewater Requirements

Power plant wastewater streams and quantities are listed in Appendix B (Volume VII), Figure 5.5.3-1, Water Balance Diagram.

### 5.5.4 System Design

The 2 x 350 MW Lakhra fired power plant heat rate for unwashed coal is based on a steam generator efficiency of 82.00 percent. This thermal efficiency is based on an air heater exit temperature of 300°F (corrected) and 30 percent excess air in the furnace for combustion. The auxiliary power consumption for these calculations is 10 percent. Preliminary assessment of auxiliary power consumption, which includes motor driven boiler feed pumps, has confirmed this rate. The plant net heat rate for unwashed coal is:

$$8263/0.820 \times (1 - 0.10)$$

$$= 11{,}196 \text{ Btu/kWh, } (2{,}821 \text{ KCal/Kwh}).$$

At a net output of 350,000 kW each unit, the fuel input rate to each steam generator is 3,919 million Btu/hr. At an average gross calorific value of 5,100 Btu/lb and an annual capacity factor of 70 percent, the annual estimated fuel consumption for the 2 x 350 MW plant is:

4,275,000 tonnes per annum

The 2 x 350 MW Lakhra fired power plant heat rate for washed coal is based on a steam generator efficiency of 82.4 percent and an estimated auxiliary power consumption rate of 9 percent. The plant net heat rate for washed coal is:

$$8263/0.824\ (1 - 0.09)$$

$$= 11{,}020 \text{ Btu/kWh, } (2{,}777 \text{ KCal/Kwh}).$$

At a net output of 350,000 kW each unit, the fuel input rate to each steam generator is 3,857 million Btu/hr. At an average gross calorific value of 6,200 Btu/lb and an annual capacity factor of 70 percent, the annual estimated washed fuel consumption for the 2 x 350 MW plant is:

3,460,000 tonnes per annum

which requires 5,324,000 tonnes per annum of unwashed coal based on a projected yield of 65 percent for washed Lakhra lignite.

The plant heat rate for unwashed coal and an $SO_2$ scrubber system on 50 percent of the flue gases of each unit is based on an 82.00 percent thermal efficiency and an auxiliary power consumption of 12.5 percent. The additional 2.5 percent auxiliary power consumption reduces plant net output to about

680 MW. The plant heat rate for unwashed coal with partial $SO_2$ removal is:

$$8263/0.820 \times (1 - 0.125)$$

$$= 11{,}516 \text{ Btu/Kwh, } (2{,}902 \text{ KCal/Kwh}).$$

The annual estimated fuel consumption remains at 4,275,000 tonnes.

The plant heat rate for unwashed coal and an $SO_2$ scrubber on 100 percent of the flue gases on each unit is based on an 82.00 percent thermal efficiency and an auxiliary power consumption of 14.0 percent. The additional 4.0 percent auxiliary power consumption reduces plant net output to about 668 MW. The plant heat rate for unwashed coal with full $SO_2$ removal is:

$$8263/0.820 \times (1 - 0.14)$$

$$= 11{,}717 \text{ Btu/Kwh, } (2{,}953 \text{ KCal/Kwh}).$$

The annual estimated fuel consumption remains at 4,275,000 tonnes.

Preliminary system requirements have been established for the major power plant systems. The system design descriptions which are attached at the end of this volume discuss system functions, provide a summary description of the system and define system design criteria. The following system design descriptions were prepared for Lakhra Power Feasibility Study:

## SYSTEM DESIGN DESCRIPTIONS

I. Main Cycle
II. Main and Reheat Steam
III. Condensate
IV. Boiler Feedwater
V. Extraction Steam
VI. Circulating Water
VII. Makeup and Service Water
VIII. Potable Water
IX. Water Treatment
X. Closed Cooling Water
XI. Auxiliary Steam
XII. Service and Instrument Air
XIII. Ash Handling
    A. Fly Ash
    B. Bottom Ash
XIV. Flue Gas and Air Quality Control
XV. Wastewater
    A. Sanitary Waste Treatment
    B. Industrial Waste Disposal
XVI. Fire Protection
XVII. Control Building HVAC
XVIII. Cycle Makeup Treatment Systems
XIX. Plant Coal Handling Dust Control
XX. Coal Handling
XXI. Electrical Power Supply
XXII. Emergency Power Supply
XXIII. Instrumentation and Control System

### 5.5.5 Equipment Specifications

The following power plant equipment model specifications are included in Appendix A, Volumes IV, V and VI.

| | |
|---|---|
| M-1 | Boiler Island |
| M-2 | Turbine Generators and Accessories |
| M-3 | Condenser |
| M-4A | Electrostatic Precipitator |
| M-4B | Wet Flue Gas Desulfurization System |
| M-5 | Feedwater Heaters |
| M-6 | Deaerator |
| M-7 | Motor Driven Boiler Feed Pumps |
| M-8 | Condensate Pumps |
| M-9 | Circulating Water Pumps |
| M-10 | Mechanical Draft Cooling Tower |
| M-11 | Cycle Makeup Demineralizer System |
| M-12A | Wastewater Treatment Equipment |
| M-12B | Sanitary Wastewater Treatment System |
| M-13 | High Pressure Power Piping and Hangers |
| M-14 | Fly Ash Handling System |
| M-15 | Closed Circuit Cooling Water Heat Excnangers |
| M-16A | Diesel Engine and Electric Motor Driven Fire Pump and Accessories |
| M-16B | In-Plant and Yard Fire Protection |
| M-17 | Low Pressure Piping |
| M-18 | Traveling Water Screens |
| S-1A | Supply of Concrete |



Gbl

| | |
|---|---|
| S-1B | Concrete Work |
| S-2 | Structural Steel |
| S-3 | Turbine Room Overhead Crane |
| S-4 | Coal Handling |
| S-5 | Circulating Water Piping |
| S-6 | Chimney |
| E-1 | Motors Under 200 kW |
| E-2 | Motors over 200 kW |
| E-3 | Switchgear |
| E-4 | Motor Control Centers |
| E-5 | Diesel Generator |
| E-6 | Auxiliary Power Transformers |
| E-7 | Step-Up Transformers |
| I-1 | Instrumentation and Control |

## 5.5.6 Analysis of Environmental Control Technologies

### 5.5.6.1 $NO_x$ Emission Control

Five techniques were investigated for control of $NO_x$ emissions for the Lakhra Plant; they are:

- Flue gas injection at the burners
- Additional furnace cooling surface
- Corner firing
- Off-stoichiometric/overfire air
- Low $NO_x$ burners

Flue gas injection at the burners has been used to provide extra mass flow to reduce peak flame temperatures to prevent formation of excess $NO_x$ in the furnace. Such a system also affects superheater and reheater steam temperatures, is maintenance intensive, reduces unit efficiency and increases auxiliary power consumption. This method of control of $NO_x$ emissions is actually flue gas recirculation which has been ruled out of consideration for steam temperature control. Because of the disadvantages above, flue gas injection at the burners was given no further consideration.

The application of additional furnace cooling surface is a technique that reduces furnace exit temperature and, if placed as a division wall(s) at the burner zone, reduces flame temperature somewhat. The use of a full or partial division wall(s) is not recommended with a severe slagging coal. A large furnace with a low plan area heat release rate is required with a fuel such as Lakhra that is classified as severe slagging. This parameter coupled with the requirement for a low furnace exit temperature in effect results in additional furnace cooling surface without the use of a full or partial division wall(s).

Corner firing compared to front turbulent firing has historically shown lower emission rates of $NO_x$. Corner firing is available from only one U.S. steam generator manufacturer; however, the use of opposed fire low $NO_x$ burners, lowered plan area and burner zone heat release rates has reduced the differential between types of firing to nil.

Off-stoichiometric/overfire air is a technique currently used by steam generator manufacturers to reduce production of $NO_x$ and thereby control emissions to less than the applicable point

source emission standard for this gaseous pollutant. Off-stoichiometric/overfire air is a technique where the sum of secondary and primary air introduced through the burners is less than the theoretical air required for combustion, and the balance of the secondary air is introduced to the furnace through idle "overfire" burner ports over the active burners. A typical ratio of air for Lakhra coal might be 95 percent of theoretical air through the active burners, 35 percent of theoretical air through idle overfire air burners for a total of 130 percent of theoretical air available at or above the burner zone for the combustion process. The disadvantage of this technique is that a reducing atmosphere is present in the burner zone. Such an atmosphere will promote slagging and corrosion of waterwall tubes. With Lakhra coal, the effects of slagging and corrosion of waterwall tubes cannot be tolerated. The use of this technique for control of $NO_x$ emissions was given no further consideration. The three manufacturers of steam generators contacted in the USA agreed with this conclusion.

Low $NO_x$ burners have been developed to eliminate the need to apply flue gas injection at the burners or off-stoichiometric/overfire air techniques for control of point source emissions of $NO_x$. The low $NO_x$ burner spacing is generally wider and farther from furnace side walls than previous designs using wall burners. Low $NO_x$ burners typically utilize compartmentalized wind boxes at each burner level and individual burner register settings to control the amount of secondary air that is introduced intimately with the fuel/air mixture from the pulverizers and the balance of secondary combustion air that is introduced around the fuel and its initial flame mass.

The severe slagging characteristics and high potential for waterwall tube corrosion by burning Lakhra washed or unwashed lignite fuel rules out all techniques for control of $NO_x$ emissions except low $NO_x$ burners. It is recommended that only low $NO_x$ burners be considered in the boiler specifications. The low plan area heat release rate and low furnace exit temperature required for Lakhra coal and low $NO_x$ burners will result in a point source emission rate equal to or lower than the World Bank Standard of 260 nanograms per joule (0.60 pounds per million Btu).

### 5.5.6.2 Particulate Emission Control

Two conventional alternatives for flue gas particulate collection were evaluated for the Lakhra Plant, electrostatic precipitators (ESP) and fabric filters (FF). These devices are the primary particulate collection devices used in the utility power industry worldwide. Cost and operational characteristics

are the usual major criteria considered when deciding which type of collector to use for a particular application.

Typically, ESP's have been used on plants burning low to high sulfur coals, while FFs have been primarily used on low sulfur coals. A few FF's are operating on medium to high sulfur bituminous coals (2 to 3 percent); however, this is not the norm.

The reasoning for use of ESP's on medium to high sulfur coals is that a portion of the sulfur dioxide ($SO_2$) produced in the flue gas converts to sulfur trioxide ($SO_3$), which behaves as a conditioning agent. The presence of $SO_3$ lowers the resistivity of the fly ash and allows it to be charged and collected more easily in an ESP. Thus, higher sulfur coals allow more $SO_3$ production in the flue gases and this lowers the size of the ESP required, when compared to an ESP designed for low sulfur coal fly ash collection. Higher sulfur coals generally have a higher acid dewpoint, which can cause acid attack on the bags of fabric filters, shortening the bag life, and possibly causing "sticky" ash which could blind the bags and take an FF out of service.

An FF is not affected operationally by ash resistivity, but rather by gas velocity through the bags. Thus, an FF is sensitive to changes in gas volume and excessive pressure drop across the bags due to excessive gas velocity. Excessive gas velocity can force ash particles into the bag material resulting in bag blinding.

Therefore, the size of an ESP is more sensitive to coal and ash characteristics, while FF sizing depends on gas volume. Coal sulfur content, coal ash content, ash loading to the particulate collector, and equipment maintenance must be taken into account during equipment selection. These factors directly affect equipment design and cost, and reliability to meet the particulate emission rates in question.

The Lakhra coal contains 6.5 to 9.5 percent sulfur on a dry basis by weight, and from 26 to 46 percent ash on a dry basis by weight. This ash content results in a high ash loading to the particulate collector. High ash loading to an FF will result in more frequent bag cleaning to maintain a lower pressure drop, shortening bag life. Acid dewpoint will tend to be higher with the high sulfur content of the Lakhra coal causing acid attack of the bags.

Based upon the above reasoning and associated technical facts, an ESP was selected as the logical equipment for particulate collection at the plant. Maintenance of an ESP should be less

than with an FF, with the high ash loadings which will be encountered.

### 5.5.6.3 Sulfur Dioxide Control

The high sulfur content (6.5 to 9.5 percent dry basis) and low gross calorific value of Lakhra coal dictates that some level of $SO_2$ reduction will have to be applied in order to ensure compliance with World Bank guidelines, as discussed in Section 5.4. Uncontrolled emission of $SO_2$ from a single 350 MW unit burning the mean Lakhra coal is 574 tons per day, (Table 4.1.2), on an equivalent annual basis using a 70 percent capacity factor and 90 percent of total fuel suifur content available for the formation of $SO_2$. Should a "point source" for the Lakhra Project be defined as a steam generation unit, then only a moderate reduction in $SO_2$ is required. If "point source" is defined as the total emission from the Lakhra power plant site, then significantly more reduction to a level of 250 TPD per unit is required for a 2 x 350 MW installation.

Moderate $SO_2$ reduction may be accomplished by either partial scrubbing with a flue gas desulfurization system or by coal washing to reduce the initial sulfur content of the fuel. High percentage efficiency $SO_2$ removal can be accomplished by using a flue gas desulfurization system on the full gas stream or potentially, by utilizing fluidized bed combustion boilers in lieu of conventional pulverized coal units. Both technologies are capable of providing 90 percent removal of $SO_2$. The discussion which follows provides an assessment of the various $SO_2$ reduction technologies and their possible application to the Lakhra Project.

As discussed in Chapter 4, a significant amount of testing has been performed by both GCII and J. T. Boyd Co. to establish the washability of Lakhra coal. The test results show that $SO_2$ emissions can be reduced by about 40 percent if the coal is washed. Additionally, the Btu content can be improved by approximately 20 percent and ash loading can be decreased by up to 50 percent. These benefits, however, are offset by a low material yield in the range of 65 percent and subsequent loss of the Btus mined, in the range of 22 percent. These negative impacts mean that additional reserves will have to be demonstrated in order to support the 2 x 350 MW plant development and that the cost of coal will be higher to pay for the construction, operation and maintenance of the wash plant.

FGD systems basically are categorized into wet and dry systems. Of these there are throwaway and recovery systems. Wet FGD systems use a variety of reagent slurries and solutions to scrub the gas, thoroughly saturating 55°C (130°F) the flue

gas, and producing wet or dry by-products. Dry FGD systems utilize a smaller amount of reagent slurries and solutions, reducing the gas temperature to 63-68°C (145°F-175°F); however, the gas is not saturated. A dry by-product much like dry fly ash is produced.

Wet FGD systems use reagents such as lime, limestone, soda ash, ammonia, etc. The by-products produced vary such as throwaway calcium salts, saleable and throwaway gypsum, ammonium nitrate (for fertilizer industry), sulfuric acid (saleable), and elemental sulfur. The systems which produce a throwaway by-product are less complex from an equipment operation and maintenance standpoint than the systems producing a saleable by-product. The sale of the by-product helps to offset the added equipment costs and utilities.

Of approximately 80,800 MW of power generation units in the USA with wet or dry FGD systems, less than 5 percent, (3,500 MW) recover sulfuric aid or $MgSO_4$ for input to a fertilizer plant or gypsum for use as building products. Pakistan imports sulfur for various uses, including the production of fertilizer. The recovery of sulfuric acid is simpler than the recovery of elemental sulfur, but both are accomplished by complex processes. Sulfuric acid production is ideally matched to the rate of end use to minimize storage of acid for surge capacity. Elemental sulfur can be stored similar to coal and exposed to the atmosphere, as it will not decompose to environmentally harmful chemical compounds. The application of such an FGD system to the Lakhra Power Plant should be carefully studied during detailed engineering. The displacement of imported sulfur by recovering sulfur from power plant flue gases is possible. The technologies are used worldwide in chemical plants to produce sulfuric acid or recover elemental sulfur from chemical processes; however, the application of these techniques to a coal-fired power plant is limited. The power plant's generating capability should not be affected by the end user s ability or inability to process the recovered acid or sulfur. Storage of or disposal and neutralization of acid or stock piling of sulfur is essential to allowing the power plant to operate normally without being restricted by recovery FGD systems.

Dry FGD systems use lime or sodium compounds for scrubbing of $SO_2$, and all produce a throwaway by-product at the present stage of commercial development of the systems.

When considering an FGD system for a particular application, the following areas are investigated:

1. Coal type (sulfur content, ash content, etc.)

2. $SO_2$ removal efficiency required

3. Availability of reagents

4. Availability and quality of raw water for make-up

5. By-product disposal mode including marketability of saleable by-products.

After consideration of the above criteria, the potential plant sites, and the present information on Pakistan, it is recommended that a wet limestone slurry FGD system producing a throwaway gypsum (calcium sulfate) by-product is the logical system for this application. For Lakhra coal with 6.5 to 9.5 percent sulfur on a dry basis, the wet FGD system is more economical to operate. The operation of a dry FGD system is cost prohibitive due to the large amount of lime reagent that is used. Typical limestone costs in the USA range from 8 to 12 US dollars per ton and lime costs are about 50 US dollars per ton. The cost of limestone is transportation sensitive. It is estimated that the production of limestone as a byproduct of overburden removal for open cut coal mining might range from 5 to 10 US dollars per ton. The installation and operation of a calcining plant makes the cost of lime far less sensitive to transportation and its price will likely remain near 50 US dollars per ton. The budgetary pricing gathered resulted in essentially the same capital cost for a wet or a dry FGD system. However, the cost of limestone for a wet system would range from US $1,700,000 to US $3,400,000 per year compared to over US $14,000,000 per year for the cost of lime for a dry FGD system. Only a wet FGD system was considered for the Lakhra Plant.

The by-product waste slurry from the wet FGD system will be oxidized by air injection to produce calcium sulfate (gypsum). Gypsum crystals are large and dewater well. The gypsum will be pumped to on-site settling ponds, with a major portion of the water returned to the FGD system for reuse. This gypsum is not reclaimable for sale. Additional equipment would be required to produce a wallboard grade gypsum for use in the building industry.

Fluidized bed combustion is a technology where stoker-sized coal (up to 1 1/4") is combusted in a bed of sand, coal and limestone at a temperature of approximately 845°C (1550°F). Sulfur in the coal reacts with calcium carbonate ($CaCO_3$) in the limestone to form calcium sulfate ($CaSO_4$). This material is collected, cooled and exits the bed drain system as a dry product similar to fly ash. Additional benefits of this combustion method are the low potential for the formation of nitrous oxides ($NO_x$) due to the low combustion temperatures

used and the omission of furnace slagging and convection pass fouling. $SO_2$ removal efficiencies in excess of 90 percent have been demonstrated with this technology. The process requires the use of a good quality limestone (in excess of 85 percent $CaCO_3$). Initial testing of the limestone overlying the coal in the Lakhra lease area indicates that this stone could be suitable for use as a sorbent. Thus strip mining of the Lakhra coal would supply two of the raw materials required for fluid bed combustion, coal and limestone. Further testing is necessary to confirm this assumption.

The major drawback to the application of fluid bed technology is the lack of long-term experience at utility scale. Demonstration projects and industrial size projects using fluid bed boilers in the range of 50,000 to 150,000 lb/hr are currently in operation in the USA. Success at this scale has led to recent contracts for industrial units to the 300,000 lb/hr range and utility interest for units in the 1,000,000 lb/hr range (approximately 150 MW gross generating capacity). The projected steaming rate for each 350 MW Lakhra pulverized coal boiler is 2,900,000 lb/hr; thus a number of smaller steam generators would be required to match the steaming rate of a pulverized coal unit.

In addition to the problem of scale up, initial experience indicates that some features of fluidized bed designs need to be improved in order to maintain a high degree of long-term reliability. Foremost among these areas is the problem of erosion on tubes subjected to abrasion in the fluidized bed. Early designs have been subject to tube failures after only a few thousand hours of operation and, while improvements are being made, fluid bed technology lacks the length of service necessary to solve these types of problems.

Within the past year, several U.S. utilities have initiated fluid bed programs which vary from existing boiler retrofit, to re-powering existing units, to new unit construction. In addition, a Spanish utility has initiated a study and pilot test program for the development of a circulating fluid bed boiler design to burn a high sulfur Spanish lignite. These programs represent a positive step and a high level of confidence in this technology; however, the current level of development is a serious drawback to fluid bed combustion as an option for the Lakhra Project, especially within the confines of the present schedule.

In order to assess the impact of $SO_2$ reduction options at various levels of removal, GCII has prepared comparative estimates for use by ICF which establish costs for the following:

Base Case - Particulate collection only, No $SO_2$ reduction

Alternate #1 - $SO_2$ reduction to the 500 TPD/unit level (1,000 TPD/Plant).

1. By partial scrubbing
2. By coal washing

Alternate #2 - $SO_2$ reduction to 250 TPD/unit level (500 TPD/Plant).

Alternate #3 - $SO_2$ reduction to 375 TPD/unit level (750 TPD/Plant).

The results of these estimates are presented in Chapter 8.

5.5.6.4 Water Pollution Control Technology

This section discusses the control technology employed to comply with the environmental guidelines discussed in Section 5.4 of this report. Sources of water pollution and potential contaminants are discussed in Section 5.5.3. Pollution control technology employed is within the constraints imposed by guidelines, site conditions, and water conservation. In general, reuse of water is contemplated wherever feasible, and the technology used has been kept simple.

A listing of major wastewater streams and treatment options along with recommended methods is given below:

a. Cooling Tower Blowdown; Cooling tower blowdown is estimated to be approximately 22 l/s (350 gpm) per unit at eight cycles of concentration. Under these operating conditions the recirculating water system is expected to be slightly scale forming. The recirculating water would require acidification with a small quantity of an organic dispersant. Cooling water is not expected to require appreciable use of corrosion inhibitors.

   Options for disposition of cooling tower blowdown are:

   1. Blowdown can be evaporated

   2. Blowdown can be reused.

   The reuse option was selected in order to conserve treated water and to save evaporation pond land area.

b. Water Treatment Wastes

1. Clarifier Underflow: This stream consists of sludge from coagulation cold lime softening process. Waste is high in suspended solids. This waste stream will be directed to the miscellaneous waste evaporation pond.

2. Filter Backwash: This waste stream results from the backwashing of pressure filters. The waste stream is 40-200 mg/l of suspended solids and can be reused in ash disposal or FGD systems. Reuse of this stream is the preferred method of disposal.

3. Demineralizer Backwash: This stream consists of acid and caustic wastes, rinses from the make-up demineralizers. These wastes will be collected in a tank and they tend to self-neutralize. Wastes are high in total dissolved solids. This waste stream will be directed to the miscellaneous waste evaporation pond or to the ash disposal pond as dictated by plant operations requirements.

c. Oily Wastes: These waste streams originate from floor drains, equipment drains, turbine area sump and yard drains. Wastewaters contain suspended solids and oil. Oil separation and suspended solids settling were considered. However, in keeping with the general philosophy of conserving water and minimizing mechanical equipment, it was decided to collect these wastes and reuse them to spray over the coal pile for dust suppression.

d. Coal Pile Runoff: Coal pile runoff is expected to be minimal due to low rainfall at all three Lakhra sites. Runoff, if any, will be directed to the miscellaneous waste evaporating pond.

e. Chemical Cleaning Wastes: Chemical cleaning of the boiler is performed after installation and prior to the first service use. Therefore, the frequency is every 4 to 5 years or more often depending upon in-service conditions.

Chemical wastes contain heavy metals, acid, amines and passivating agents.

Chemical wastes will be collected in a tank, neutralized and pumped to the miscellaneous waste evaporation pond. This neutralized water could block the intrices of sand due to precipitation of heavy metals. It can also infiltrate heavy metals into the ground water. This waste is

classified as hazardous. The miscellaneous waste evaporation pond will be sealed using a synthetic material lining to mitigate the possibility of leakage of hazardous materials.

f. Boiler Blowdown: Boiler blowdown will be used in the bottom ash sluice system in order to reuse the water. Boiler washes, air heater washes and overflows will also be used in the bottom ash sluice system.

g. FGD/Fly Ash Water: FGD system and fly ash sluice system water will be ponded and reused. The system is not expected to have any overflows due to evaporation far exceeding precipitation for this area of Pakistan.

h. Bottom Ash Water: Bottom ash will be wet sluiced, ponded and reused. The system is not expected to have any overflow.

Sanitary Waste: Sanitary waste will originate from human occupancy at the power plant complex and the workers' colony at the site. It is expected that 9800 persons will live and work at the colony and the plant.

Design Criteria

| | |
|---|---|
| Population Equivalent (P.E.) | 9800 |
| Flow @ gpcd | 2410 $m^3$/day (637,000 gpd) |
| $BOD_5$, P.E. x 0.17 | 755 kg/day (1,666 lbs/day) |
| TSS, P.E. x 0.2 | 890 kg/day (1,960 lbs/day) |

Sanitary wastewater will be treated in a separate plant. Major options available for sanitary waste treatment are as follows:

1. Septic tank and seepage field
2. Primary settling and land disposal
3. Secondary treatment and land disposal
4. Secondary treatment and reuse

Depending upon the wastewater volume, a septic tank and seepage field is the most inexpensive solution provided the percolation rate is adequate and the land is available for a seepage field.

Primary treatment using a stabilization pond and land disposal could also be used fairly inexpensively depending

on the geology, hydrology and other site conditions. A surface stabilization pond could cause some odors under certain conditions.

An activated sludge plant would require more operation and maintenance compared to the previous two methods. However, the plant will produce a stable effluent treated to a $BOD_5$ of 30 mg/l and suspended solids of 30 mg/l. Chlorination of the effluent would reduce the total and fecal coliform counts to within World Bank guidelines. Effluent can be disposed of on land, discharged to a waterway or reused in the FGD or ash disposal systems. The land disposal option can be exercised in quite a few ways:

1. Spray irrigation

2. Rapid infiltration and evaporation

3. Slow rate infiltration by ridge and furrow distribution

4. Subsurface disposal

For the purposes of this study, a secondary biological package system was considered because it is the most versatile and it is not site specific. It should be recognized that an economic and site specific evaluation should be performed to select and design the system during the design phase. In addition, the effluent will be reused in the FGD or ash disposal systems.

Sludge will be digested and recycled as humus for the local colony's landscaping and gardening needs.

### 5.5.7 Availability

The concerns of the lending agencies over the suitability of Lakhra coal as a boiler fuel in a thermal plant can be addressed as having a positive or negative effect on availability. The effect can be negative if design parameters for the boiler and furnace are developed by examination of insufficient data; or the effect can be positive if said design parameters are determined by a comprehensive investigation of the characteristics of the fuel through combustion testing of unwashed and washed coal, a literature and experience search for similar coals in use in the world, a washability analysis and interviews with the three U.S. suppliers of steam generators.

North American Electric Reliability Council (NERC) collects various data including Generating Availability Data Systems reports (GADS). The NERC/GADS system classifies generating plants by type, fuel and size. The system further defines statistical data rates and factors such as:

- Forced outage rate
- Equivalent forced outage rate
- Availability factor
- Equivalent availability factor
- Scheduled outage factor
- Equivalent unplanned derated hours
- Equivalent planned derated hours

Availability factor is defined as the number of hours a plant operated, or was available to operate, over the number of hours in the period under study. The forced outage rate and scheduled outage factor are used to determine availability factor.

For a plant to have a high availability factor, it is required that equipment be designed for realistic service conditions. Also, redundancy of equipment, systems or sub-systems should be included where statistical data show justification for design using standby or alternative means to accomplish the task or function that the equipment is intended to perform. For instance, in the USA it is not normal practice to provide spare boiler feed pumping capacity, but for the Lakhra Power Plant, GCII has specified three 50 percent boiler feed pumps. Statistics have shown that at this size a boiler feed pump driven by an electric motor is more reliable and available than turbine driven pumps. As a result, GCII has specified three motor driven 50 percent boiler feed pumps.

The results of the combustion testing program has defined various design parameters for a boiler burning Lakhra coal such as:

- Maximum furnace exit gas temperature
- Heat release rate:
  - per unit of EPRS
  - per unit of plan area
  - per unit of burner zone
- Maximum gas velocity
- Minimum distance from burners to upper arch
- Minimum air heater exit gas temperature
- Minimum excess air for combustion

GCII has interviewed two other boiler manufacturers in the course of this investigation for their opinion with respect to the above factors. GCII has factored their recommendations into its recommendations in Section 4.8.

The forced outage rate can be kept as low as is practical by specifying design parameters for the boiler and furnace on the conservative side of the recommended value rather than the commercial side of the value of the parameter. Further redundancy of critical equipment will also lead to a low forced outage rate. For instance, it is not practical to provide a spare induced draft fan. It is prudent to recognize that axial flow fans and high efficiency air foil bladed centrifugal fans are not the reliable choice for Lakhra Power Plant. The high abrasiveness of Lakhra ash dictates that a rugged fan be specified (even if operating efficiency may be reduced) to obtain a higher availability and more reliable design. The radial tipped single thickness bladed centrifugal fan will meet this criterion as it is basically a "material handling" fan design modified with backwardly inclined radial tipped blades to obtain a rugged design that does not totally sacrifice efficiency.

The turbine-generator guaranteed load is at 95 percent valves wide open where the 350 MW net load is available. The turbine 100 percent valve wide open load is the point at which the generator is sized. At this flow, the turbine low pressure last stage blades are specified to be at or less than 95 percent of their load limit. This design specification allows the turbine to operate with the top feedwater heater out of service at the generator rating without overloading the last stage low pressure exhaust blades. This enhances availability by specifying within the envelope of design limits.

GCII is using its 300 MW Reference Fossil Plant (RFP) design as the basis of the two x 350 MW Lakhra Power Plant. The RFP has been modified to accommodate the low GCV of Lakhra coals. The RFP goal for availability factor is 3 percent above the 10 year rolling average for 300-399 MW, drum type coal-fired boilers. That goal is currently based on a forced outage rate of 7.8 percent and a scheduled outage factor of 14.2 percent

which is an availability factor of 78 percent. The RFP design goal is 81 percent at 3 percent above that 10 year average. This goal is easily achievable for the Lakhra Power Plant considering the redundancy incorporated and conservatism of design parameters that will be included in the design of Lakhra Power Plant as a result of the coal quality assessment by John T. Boyd Company, the washability analyses by Roberts & Schaefer, the combustion testing conducted by Combustion Engineering and the feasibility study by Gilbert/Commonwealth International Inc.

### 5.5.8 Alternative Fuel Capability

The basic design generated for the Lakhra unit has been reviewed to determine the effects of providing an alternate fuel firing capability for the plant. Alternate fuels are considered to be either imported oil or imported coal. The impact of maintaining this capability extends from initial receipt and unloading of the alternative fuel at or near the Port of Karachi to the effects on the boiler itself. For purposes of this discussion, "alternate" fuel is that which can be burned in this boiler with reasonable permanent or semi-permanent modifications made to the equipment. This discussion does not cover the use of "supplemental" or "blended" fuels which may be burned without equipment modifications.

Imported Oil

The use of imported oil as an alternate fuel creates an impact primarily on the steam generator itself. It is assumed that the same unloading and transport system planned to provide unit tank train deliveries to the oil-fired units at Jamshoro may be utilized to provide fuel for a Lakhra unit. Should the Lakhra unit be located at Jamshoro, the existing oil tank farm and unloading facilities may be used and piping simply extended to the coal fired units. At the Khanot and Lakhra sites, accommodations to provide for imported oil include construction of a tank car unloading station and necessary rail tracks, fuel tanks and fuel forwarding equipment.

The scope of the impact on the boiler of firing Lakhra coal as the base fuel and No. 6 Bunker "C" oil as standby fuel is dealt with in the final report on combustion testing of Lakhra coals. In general, the steam generator vendor will handle the alternative fuel oil firing by utilizing oil burners higher in the furnace or by tilting the upper oil burners upward or both. Oil as a fuel requires lower excess air and less air per unit of heat released than does coal as a fuel. Consequently, there is ample capacity of mechanical draft fans to fire oil and use higher excess air with the biased firing of upper burners and upward tilting to maintain main steam and reheat steam temperatures at full load. Those designs that are not capable of tilting burners will use biased firing, excess air and back-pass dampers to control steam temperatures at full load. The use of a gas recirculation fan to increase mass flow over superheater and reheater surfaces for steam temperature control on standby oil fuel is not recommended as it is maintenance intensive and affects auxiliary power consumption, whereas other methods mentioned above are more efficient for the occasional use of standby oil when Lakhra coal is not available. The steam temperature control point for standby oil fuel should be

at the boiler MCR so as to minimize heat rate degradation at that load point.

Imported Coal

Currently, the only port facility in Pakistan which accommodates the unloading of imported coal is the Port Bin Qasim which serves the facilities of Pakistan Steel Corporation. Investigations into the capacity at Port Bin Qasim indicate that there is sufficient reserve capacity to import the additional coal that would be required to fire the two 350 MW Lakhra units. This assumption is based on the use of Australian coal imports which have a GCV in the range of 24.4 to 25.6 MJ/kg (10,500 to 11,000 Btu per pound). On this basis, approximately 2,000,000 tonnes (2,200,000 tons) per year of fuel would be required to support the plant. Use of Port Bin Qasim will eliminate investment in harbor facilities; however, a new rail car loading station will be required at the port area to load unit trains which would be required to transfer coal to any of the proposed Lakhra sites.

The existing facilities of Pakistan Railways from the port area to the Jamshoro area have been investigated. Pakistan Railways indicates that the additional unit trains required to transfer coal from the port area to Jamshoro may be accommodated without additions or modifications to existing facilities. North of the Jamshoro area, the Pakistan Railways line to Dadu is a single track. In order to provide deliveries to the Khanot or Lakhra sites it is anticipated that a second parallel track will have to be added from the Jamshoro intersection northward.

At the Khanot site, the rail line will have to be extended approximately 30 kilometers north of Jamshoro with a 3 kilometer siding required to interconnect with the loop track at Khanot. The existing rail unloading facility, and conveying and storage facilities sized for Lakhra coal will be adequate for the imported fuel.

At the Lakhra site significantly more work will have to be done to accommodate imported coal than at the Khanot site. Additional traffic from the unit trains will require that a second main line be extended from Jamshoro to the Khanot area and a new Lakhra siding extending approximately 20 kilometers west to the site be connected to this line. At the site itself, a new system to unload unit trains will be required. Since the Lakhra mine mouth site is laid out to accommodate delivery of coal via an overland conveyor from the mine, no rail car unloading facilities are included initially. The Lakhra site would require the addition of a new loop track, car dumper hopper and unloading conveyor to transfer coal from the dumper

area to the existing transfer house. The Lakhra site offers adequate space for these revisions; however, additional capital investment will be required. The remainder of the existing conveying and storage system at Lakhra will be adequate to handle the imported fuel.

The discussion of effects on the boiler design by imported coal requires that certain assumptions be made regarding coal quality. For purposes of this discussion, it has been assumed that the alternative fuel option for imported coal could be from South Africa or Australia. The current (mid-1985) International Coal Market favors Australian coal. The potential Australian coals could be imported from New South Wales (NSW) or Queensland (QLD). Typical NSW and QLD export coal analyses are compared below to the range of Lakhra coal.

| | Lakhra | NSW | QLD |
|---|---|---|---|
| Proximate As Recd. | | | |
| $H_2O$ | 25 - 45 | 12.0* | 12.0* |
| ASH - dry | 26 - 46 | 18.0* | 18.0* |
| VM - dry | 32 - 40 | 29.5 | 18.9 |
| FC - dry | 24 - 36 | 52.5 | 63.1 |
| Sulfur - dry | 6.5 - 9.5 | 0.6 | 0.4 |
| HHV - dry | 14.65 - 20.25 | 27.7 | 29.1 |
| | (6,300 - 8,700) | (11,930) | (12,500 ) |

*Set as upper unit of moisture and ash in imported coal

| | Lakhra | NSW | QLD |
|---|---|---|---|
| Ultimate | | | |
| | DRY | MAF | MAF |
| Ash | 26.17 - 41.87 | - | - |
| $H_2$ | 2.76 - 3.66 | 5.3 | 4.5 |
| C | 35.61 - 50.75 | 82.4 | 87.0 |
| $N_2$ | 0.66 - 1.08 | 1.7 | 1.7 |
| S | 6.02 - 9.85 | 0.4 | 0.8 |
| $O_2$ | 9.69 - 12.84 | 10.2 | 6.0 |
| Cl | 0.10 - 0.19 | - | - |
| HHV | 14.1 - 20.8 | 33.5 | 35.0 |
| | 6,060 - 8,950 | 14,400 | 15,050 |

Mineral Analysis

| | Lakhra | NSW | QLD |
|---|---|---|---|
| $SiO_2$ | 32.34 - 47.68 | 62.7 | 53.0 |
| $Al_2O_3$ | 12.12 - 26.30 | 18.0 | 20.0 |
| $TiO_2$ | 1.33 - 3.16 | 0.7 | 0.6 |
| $Fe_2O_3$ | 17.02 - 33.60 | 6.1 | 5.5 |
| CaO | 2.11 - 8.39 | 5.5 | 7.7 |
| MgO | 0.79 - 2.54 | 1.1 | 5.0 |
| $Na_2O$ | 0.32 - 1.02 | 1.0 | 2.5 |
| $K_2O$ | 0.45 - 0.76 | 1.9 | 1.3 |
| $P_2O_5$ | 0.56 - 0.93 | 0.1 | 0.6 |
| $SO_3$ | 2.20 - 10.55 | 1.2 | 2.5 |
| $Mn_3O_4$ | | - | 0.1 |
| B/A | 0.3 - 0.8 | 0.19 | 0.30 |
| Fouling | Low to High | Low | High |
| Slagging | Severe | Low | Med |

By observation it is evident that a steam generator designed for Lakhra lignite will not necessarily be suitable for imported Australian coal, unless special design features are provided initially to allow firing such coal without a derate due to low steam temperatures. The combustion testing program results show this to be true for run of mine and washed Lakhra lignite.

The differences in furnace and boiler design parameters for distinct stand alone boilers are outlined as follows:

| Parameter | Only Lakhra | | Only Imported | |
|---|---|---|---|---|
| Maximum Furnace Exit Gas Temperature, °C (°F) | 1,232 | (2,250) | 1,150 | (2,100) |
| Net Heat Release Rates MJ/hm$^2$ (Btu/h·ft$^2$) | | | | |
| per unit of EPRS | 680 | (60,000) | 800 | (70,000) |
| per unit of plan area | 14,750 | (1,300,000) | 18,700 | (1,650,000) |
| per unit of Burner Zone | 2,850 | (250,000) | 4,000 | (350,000) |
| Minimum Excess Air For Combustion at Boiler MCR, Percent | 25 | | | 20 |

| Parameter | Only Lakhra | Only Imported |
|---|---|---|
| Maximum Gas Velocity, m/s (fps) | 13.7 (45.0) | 18.3 (60.0) |
| Minimum Air Heater Exit Gas Temperature, °C (°F) | 150 (300) | 130 (265) |

The slagging potential and furnace exit gas temperatures for Australian coal will allow a furnace with closer spaced superheater or reheater platens or both covering the upper furnace space between the front wall and the furnace exit, whereas Lakhra coals are such that platens in the furnace are not recommended.

Consultation with Babcock & Wilcox, Combustion Engineering and Foster-Wheeler determined the following possibilities for consideration in the design of a Lakhra coal fueled power plant which can accommodate standby imported coal:

1. Design the furnace and the convection heating surfaces for Lakhra coal and accept the potential derate resulting from lowered steam temperatures when firing imported bituminous steam coals.

2. Design the heating surfaces for imported bituminous steam coal. This option requires constant de-superheating spray for main steam and reheat steam when firing the base Lakhra coal and has a negative impact on heat rate.

3. Coat localized areas of furnace water walls with a refractory, such as Super 3000, and bias fire upper burners or adjust tilts upward or both. The refractory has to be removed when returning to base Lakhra coal or utilize sprays for main steam and reheat steam if the refractory is not removed.

4. Install future burners and leave them plugged until imported coal is to be fired. This option requires an outage to change out burners and all new coal piping plus plugging of other burners that would be idle for periods when imported coal is fired.

5. Given that the present design of six pulverizers to carry full load on Lakhra coal plus a spare pulverizer will result in four to five pulverizers to carry full load on imported coal and in effect leave two to three spare pulverizers. Bias firing of upper burners and back pass dampers for reheat steam temperature control is a possible option to limit de-superheating spray to main steam only.

6. For short periods of firing imported coal the operator could utilize high excess air and biased firing or upward tilts to minimize low-steam temperatures. This option lowers thermal efficiency, increases power consumption, and affords greater potential for fly ash erosion.

7. The least desirable option is to provide gas recirculation fan(s) and mechanical dust collectors for utilization only when imported coal is to be fired.

All three vendors contacted stated they could give only these generalized answers to the question of how to design a Lakhra fired power plant for standby imported coal, unless they have a specific set of proximate, ultimate, and mineral analyses. GCII agrees that there must be firm knowledge of the source and analyses of the prospective imported coal before a steam generator supplier can reliably design a boiler for standby imported coal and expect performance to come close to matching the predicted values. For instance, on Lakhra the coal flow is about 348 tonnes per hour (384 tons per hour) as opposed to the coal flow for imported coal of about 135 tonnes per hour (150 tons per hour). The net heat input per unit of plan area on imported coal would be less than 15,000 $MJ/h \cdot m^2$ (1,200,000 $Btu/h \cdot ft^2$) in the Lakhra boiler, where it should be near 19,000 $MJ/h \cdot m^2$ (1,650,000 $Btu/h \cdot ft^2$) if the boiler were designed for imported coal as base fuel instead of as standby fuel.

The use of imported coal as standby fuel is possible. The boiler can be designed for Lakhra and imported coal; however, specific methods of overcoming derated performance and low-steam temperatures on imported coal must be studied when the source and coal analyses of the imported fuel are known. If the imported fuel is also used as steam coal in domestic generating units in the country of export, then visits to the electrical authority and the plants using that coal would be in order prior to or during the bidding period.

### 5.5.9 Cooling Tower Considerations

The April 1983 project review by SWEC addressed the type of cooling system in Section 6.2, Site Selection, and concluded that cooling towers were the choice over traditional once-through cooling and an unconventional air cooled condenser. That report moved directly to mechanical draft cooling towers with no discussion of natural draft cooling towers. The performance and draft produced by a natural draft cooling tower is sensitive to relative humidity. Its thermal performance varies with relative humidity and its design selection criteria must be determined very carefully. The thermal performance of

a mechanical draft cooling tower is far less sensitive to variations in relative humidity, as the fans provide the draft to move air through the tower and cool the circulating water.

The lower relative humidity in a desert climate is not conducive to the use of a natural draft cooling tower. The incoming air can actually be cooled rather than heated, and the natural draft cooling tower can have a reverse down draft present under some conditions of low relative humidity, rather than up flow of air and water vapor. Many, if not all, cooling towers installed on power stations in U.S. desert climates are mechanical draft in lieu of natural draft to overcome this phenomenon, although there may be some use of fan-assisted hyperbolic cooling towers.

The use of a mechanical draft tower for the Lakhra Power Plant will result in a higher auxiliary power consumption than would the use of a natural draft tower or fan-assisted hyperbolic cooling tower; however, the installed cost of a bank of mechanical draft cooling tower cells will be significantly lower than that of a natural draft or fan-assisted hyperbolic tower. The construction of either type of cooling tower will make use of Pakistan resources, as GCII has specified a concrete tower. There may be higher maintenance of the mechanical draft and fan-assisted hyperbolic cooling towers, as the draft fans will need lubrication and occasional replacement of rotating parts, whereas the natural draft cooling tower has no rotating equipment to produce draft. The disadvantages of the mechanical draft cooling tower compared to the natural draft cooling tower are balanced by the lower cost of the former as well as the more consistent thermal performance of the mechanical draft cooling tower. The fan-assisted hyperbolic tower fits in the middle with respect to first cost, operating costs and maintenance requirements. Seismic requirements for any hyperbolic-shaped cooling tower could also add considerably to first cost.

GCII feels that a cooling tower condenser optimization study must be conducted early in the actual design stages of the Lakhra Power Plant and that it should include mechanical draft versus fan-assisted hyperbolic cooling towers. The natural draft tower should be included if relative humidity never goes below 50 percent. The results of such a study should confirm the application of mechanical draft cooling towers.

## 5.6 CONSTRUCTION PHASE AND SCHEDULE CONSIDERATIONS

### 5.6.1 Project Approach

In the utility industry there are numerous approaches to implementing the design, construction and operation of a power plant. All of these approaches have been used successfully worldwide although some lend themselves better under certain conditions. These basic approaches are:

1. A/E and General Contractor - this approach utilizes the A/E to perform the preliminary and detailed design which is issued for construction to a general contractor. Usually this form of contracting is on a cost plus basis due to the overlapping of design and construction activities.

2. A/E, Construction Management, Multiple Contractors - this approach utilizes the A/E to perform the preliminary and detailed design in such a manner that unique construction bid packages are developed for competitive bidding. After award of contracts, the A/E may also serve as the construction manager supervising multiple contractors. Projects using this approach often times find themselves administering in excess of 100 different contractors.

3. A/E and Turnkey Contractor - this approach utilizes an A/E to perform the preliminary engineering only, and develop a tender document for a turnkey design and construction contract. This approach simplifies the contracting efforts as there is essentially a single responsible party for the design and construction of the plant.

It is GCII's recommendation that the Lakhra power project use this third approach; that is, A/E and Turnkey Contractor. There are several reasons for this recommendation. First, as mentioned above, maintaining single responsibility through the use of one major contractor minimizes the contractual and coordination problems often encountered with multiple contractors. The turnkey contractor would be responsible for the supply and erection of all plant components and the coordination of any subcontractors he may retain. Secondly, the turnkey approach has been demonstrated to be an approach which can minimize the overall project schedule on most power plant projects. The schedule for the Lakhra 350 MW units is extremely tight, as discussed in Section 5.6.2. Thirdly, it gives the Owner good cost control through the use of the A/E developing a tender document which can be competitively bid for a firm lump sum price. Lastly, the turnkey contract can be designed to be flexible. This flexibility can be exercised for the Lakhra

Project in several ways. It may require the turnkey contractor to procure major equipment such as the boiler and turbine generator from U.S. sources, thus satisfying USAID's requirements for their portion of the project funding. As an alternate and as discussed later in Section 5.6.2, it could allow the boiler and turbine generator to be procured separately and in advance of the award of the turnkey contract.

Utilizing the A/E and Turnkey Contractor approach, the following events outline the project implementation. On selection of an A/E by the Owner, the A/E would begin the preliminary design of the plant keeping in mind that his ultimate product is a tender document for the design and construction of the plant. Other requirements of the Owner such as procurement and contracting plans, environmental and regulatory requirements, quality assurance programs, training requirement programs, etc., would also be developed for inclusion in the tender document. In addition to the prime tender document for the plant construction, it is envisioned that two additional contracts would be required. These are site preparation work and construction camp facilities. These packages would be developed for local tendering to prepare the site for the mobilization of the prime turnkey contractor. The A/E, working closely with the Owner, will issue these tender documents for bid, receive and evaluate the bids, and, with the Owner's concurrence, award the contracts. The A/E will continue on the project during the design phase as the Owner's engineer primarily responsible for design review. The detailed specifications and drawings for a particular system will be approved by the Owner's engineer prior to the contractor beginning construction of that system. During the construction phase, the engineer will continue his design review as well as mobilize the construction monitoring team at the site. This organization, supplemented with personnel from WAPDA, would monitor and report on the construction activities to assure compliance with approved design drawings and specifications. The contractor would also be responsible for system testing and commissioning of the plant. It would be required by contract that these activities be coordinated very closely with the Owner as the Owner's operators will have received training by this time and will be blended into the start-up phase of the plant as the culmination of their training program.

## 5.6.2 Project Schedule

### Discussion

The Project Schedule for development of the Lakhra Power Plant is presented on Figure 5.6.2. It shows the sequence of activities required for achieving commercial operation of Unit 1 in 59 months from authorization to proceed with engineering and Unit 2 following 12 months later.

The critical events are the initial engineering in the form of a turnkey bid package and final project commitment to start construction. In order to meet the project schedule, the following key milestones must be met:

| Events | Time Period |
|---|---|
| 1) Initial Engineering Contract Award | 15 Months before Turnkey Contract |
| 2) Site Access and Essential Construction Facilities Established | 5 Months before Turnkey Contract |
| 3) Turnkey Contract Award | Project Start |
| 4) Boiler and Turbine Generator Award | 6 Months before Turnkey Contract |
| 5) Commencement of Boiler Plant Steel (Unit 1) | 13 Months after Turnkey Contract |
| 6) Steam Drum Lift (Unit 1) | 19 Months after Turnkey Contract |
| 7) Receive Power for Energization | 28 Months after Turnkey Contract |
| 8) Receive Coal to Bunkers | 34 Months after Turnkey Contract |
| 9) Unit 1 First Fire | 35 Months after Turnkey Contract |
| 10) Unit 1 Initial Synchronization | 38 Months after Turnkey Contract |
| 11) Unit 1 Commercial Operation (C.O.) | 42 Months after Turnkey Contract |

12) Unit 2 12 Months after Unit 1 C.O.

This project plan is consistent with worldwide experience for handling of material, labor staffing, and ability to accept new power into the grid. This schedule is extremely tight, but achievable within the utility environment based upon preliminary fabrication and delivery schedule information for major equipment.

Engineering and Procurement

The preliminary engineering phase (by Owner's engineer) is assumed to commence as soon as possible after completion of this Feasibility Study. The early activities will support the engineering studies, a project design manual and turnkey project tender document. Detailed engineering will be performed by the turnkey contractor and continues for the next 54 months in support of design, procurement, contract package preparation, and construction.

The critical procurement items are boiler and turbine generator, which are long lead items. Detailed design/specification work for them is scheduled early in the initial engineering phase to provide for early procurement.

Due to the critical nature of the schedule, it is recommended that the boiler and turbine/generator bids be handled by the A/E and award of purchase orders be made prior to award of the turnkey contract. If this is done, it will relax the schedule, thus improving the chances of completing the plant on time.

Additionally, since the cost of these major items is less than USAID's planned funding for the project, it may be an expeditious method of meeting the requirement of procuring U.S. equipment.

Design should also proceed for works external to the site and cooling water intake and discharge structures, raw water supply, access roads, incoming transmission lines, etc. These works should be planned so that their construction will support the timely construction of the power plant.

It is assumed that the procurement of boiler, turbine-generator equipment and the turnkey contractor will place orders for Units 1 and 2 together. The 12-month lag in the schedule for Unit 2 will provide for leveling of construction manpower.

LAMBDA POWER PLANT PROJECT
FEASIBILITY STUDY
MASTER PROJECT SCHEDULE

DATA PREPARED: 12/08/85
REV 4
SHEET 1 OF 1
FIGURE 5.2

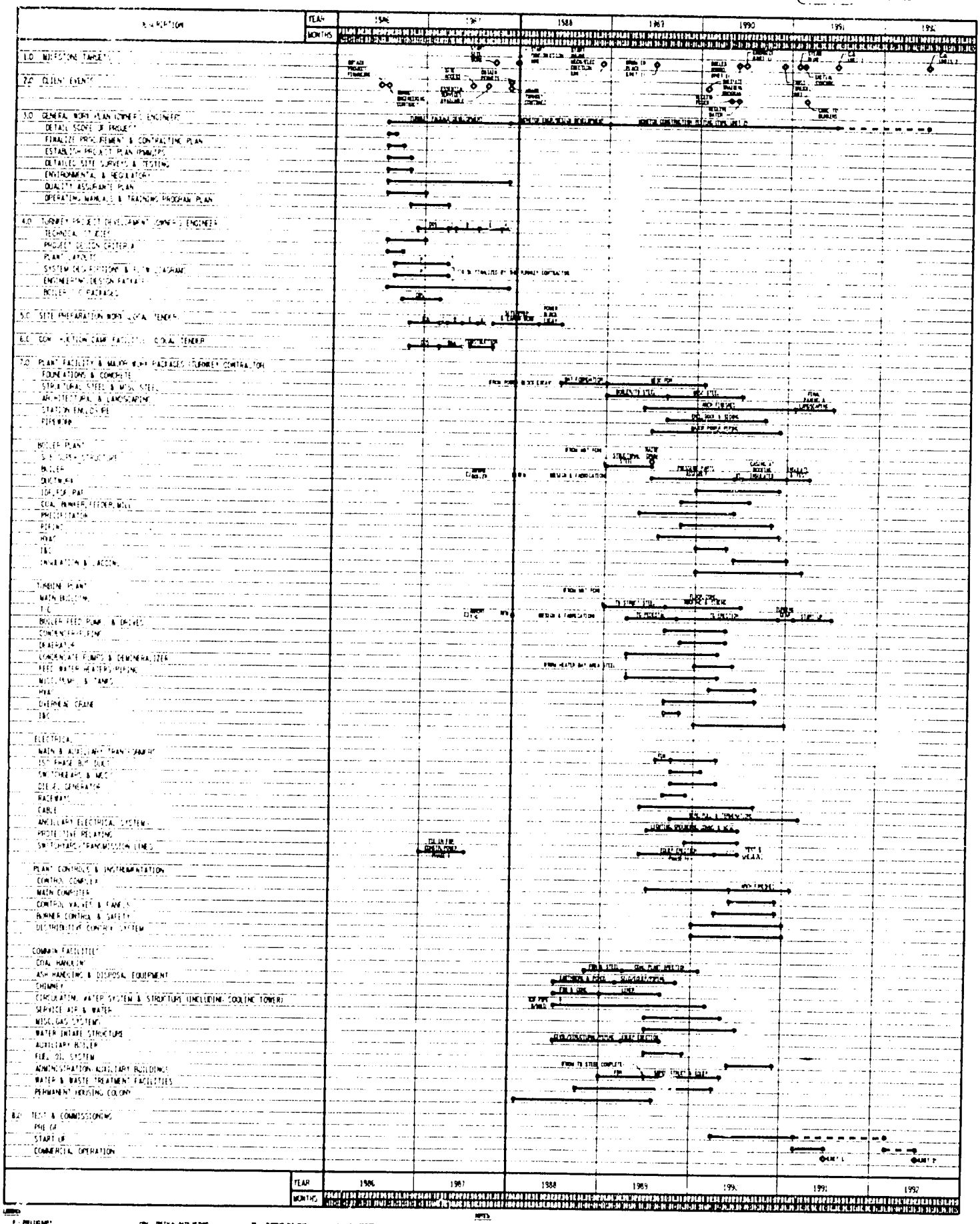

## Construction and Start-up

The scheduled duration for construction and start-up of Unit 1 is 42 months, commencing 17 months after the engineering phase begins. The start-up duration is 15 months.

The construction schedule has been developed in accordance with site, structures and plant facilities layout. Consideration is given to plant constructibility, manpower, and material flow patterns and the timing of additional units.

The site preparation work, which also includes the access roads, main construction road, railroad spurs, is scheduled early - before the turnkey contract award - as dictated by the project schedule. A local tender for this work appears to be more advantageous.

The temporary construction camp facilities and utilities, including power and water supply, yard lighting, sanitary facilities, testing facilities and equipment, are also considered separately in the schedule so that they can be contracted locally for early development.

Other factors such as provisions and location of an on-site concrete batch plant, warehouse, fabrication and shop areas, contractor's laydown areas and construction management offices should be evaluated as applicable.

The primary critical path in construction follows the activities originating from the boiler foundation, structural erection, and erection of pressure parts leading up to supporting boiler hydro required to meet a commercial operation date of Unit 1 in 42 months. The turbine generator erection is also determined to be critical based upon estimated lead time of 22 months from the date of purchase to delivery at site. In addition, several major mechanical and electrical components including plant computer, auxiliary boiler and diesel generator are considered to be priority items in the project schedule. Equally critical are "receiving power for testing and coal to bunkers" from others to achieve the start-up schedule.

The construction schedule incorporates preliminary data for crafts manpower requirements as well as productivity factors.

## Additional Comments

It is recommended that during the initial engineering phase, the Master Project Schedule be expanded to reflect the detailed plans for design, procurement, construction, and start-up activities and to establish a Detailed Critical Path Method (CPM)

Schedule. Also, a detailed evaluation should be made to confirm the critical path determination and achievability of the plan and milestone dates discussed above, based upon project scope, estimate, material, contracting and construction plans, resource availability, cash flow, and other significant project requirements.

Another consideration is that the power plant project schedule must be integrated with the coal mine development plan. This schedule requires coal to be delivered to the plant site by February, 1991.

Overall, the project schedule is considered tight but achievable. Success will require full commitment and timely decisions and completion of assigned responsibilities by all project participants.

### 5.6.3 Local Considerations and Manufacturing Capabilities

The development of a large power project similar to Lakhra requires consideration of many facets of transportation, manufacturing and construction capabilities.

Transportation of major components requires careful consideration from point of manufacture to the erection site. The routing, road/railway and bridge capacities and clearances must be carefully checked for the specific intended route of travel, and adequate reliable transportation equipment must be available. Railway facilities currently appear to be adequate to handle large components, but specially designed cars must be imported for this use. Two major rigging contractors are available for handling large components over the road system, as was evident recently with the transport of the generator stator and transformers for the Guddu project. A large multi-wheeled vehicle was imported from Saudi Arabia to transport the generator stator from Karachi to the plant site. Low bed equipment exists for the transport of items such as transformers, and adequate trucks appear to be available for other small components of plant equipment. Larger sized transformers would undoubtedly also require the use of specially designed multi-wheeled truck rigs or railway cars.

WAPDA should be able to include in the specification requirements for maximum use of local manufacturing capability to reduce its Foreign Exchange Component of the Lakhra 2 x 350 MW Power Plant. During GCII's interviews with Babcock & Wilcox, Combustion Engineering, and Foster-Wheeler, they all stated they were involved in preliminary negotiations with local Pakistani firms to fabricate and manufacture certain portions of the multitude of parts and equipment required for the 2 x 350 MW

boiler island required for the Lakhra Power Plant. In fact, one of the suppliers indicated he was very close to signing such an agreement with a company in Pakistan, but was not able to advise any specific details of who the agreement might be with until after all particulars of the arrangement were final, at which time both parties would make a joint announcement.

WAPDA is interested in such arrangements and has investigated the capability of Pakistani industry to manufacture both boilers and turbines locally. This effort has been extended by Mr. G. M. Ilias, who graciously provided the core of his efforts with a white paper entitled, "Progressive Manufacture of Boilers and Turbines in Pakistan", Figure 5.6.3 attached and letter responses from Pakistan Engineering Company Ltd. (PECO); Karachi Shipyard and Engineering Works, Ltd. (KSEW); Heavy Mechanical Complex Limited (HMC); and Pakistan Machine Tool Factory Limited, (PMTF), which are attached as Figures 5.6.4 through 5.6.7.

Steel manufacturing and fabrication facilities exist, but the larger sized members will have to be imported.

A pipe manufacturing facility is expected to start up in the fall of 1985 which will produce seamless pipe in sizes from 12mm to 250mm in various schedules and materials to American and European standards.

The local industry recognizes that technology transfer is required for Pakistan to develop manufacturing capability for boilers and turbines. PECO has the capability to provide support in the area of light engineering goods manufacture and could perhaps perform in this manner as a subcontractor to others with heavy machinery experience. KSEW has a good track record in manufacture of industrial boilers and is a leading candidate for inclusion on the acceptable bidders list for the auxiliary boiler required for Lakhra Power Plant. HMC appears to have the capability to act as a subcontractor to a Pakistani manufacturer or to provide equipment or fabricated products directly to the boiler supplier. PMTF can provide specialized components such as gears and precision machining, but indicates it would yield to its sister company HMC for boilers and turbines. There are undoubtedly other firms in Pakistan that can support the effort to provide local supply of parts, equipment and fabricated products for this project. Their omission in this discussion should not be taken as an indication that they are not qualified. The scope of this investigation was to see if local participation was possible for the proposed Lakhra Power Plant, not to decide who could and should do what. Rather, the who, what, when, where and why of participation of Pakistani industry in this project must be evaluated during assessment of Vendor proposals and will be a cooperative effort of the

potential supplier, WAPDA, the lending agency and WAPDA's consulting engineer.

Much of the Pakistani manufacturing and contracting capability developed as a result of irrigation, airport, railway, road and building projects. Consequently, the strengths of contractors and consultants are primarily in the civil disciplines.

The basic will to contribute to a significant degree in the fabrication of major equipment and the construction of a major project exists, but the infrastructure and facilities do not currently exist. The bureaucracy, to a degree, and lack of money hinder this development and importation of necessary expertise. The development of this project can therefore move forward at this time only with the import of major components and construction expertise. The local contractors can contribute significantly after training in certain specific specialized areas and with recognition and adherence to established work schedules.

# PROGRESSIVE MANUFACTURE OF BOILERS AND TURBINES IN PAKISTAN

(PUBLIC AND PRIVATE SECTORS)

By: G.M. ILIAS

11 April, 1984

## 1. Introduction

1.1 Pakistan is faced with a serious power shortage which becomes highly pronounced during winter months when severe draw-down takes place in the water reservoir levels at Tarbela and Mangla, leading to phenomenal reduction in the generating capability of the hydro-power plants located at the two dam-sites. The gap between supply and demand is likely to increase further in the coming years.

1.2 A programme of installing many thermal power plants is, therefore, inevitable and must be implemented in an effort to alleviate the shortages expected to occur in the future.

1.3 Thermal plants are highly capital - intensive. The import of power generating equipment and machines needs a great deal of foreign exchange, which is far beyond the earning capacity of Pakistan. Therefore, most of the imports are dependent on the availability of funds in terms of loans and grants from various donors such as the World Bank, the Asian Development Bank, US AID, CIDA, KFW and others. The procedures in arranging loans take a lot of time, before they are actually in a position to be utilised. This factor is mainly responsible for delays in the implementation of projects. Then, each new loan raises the amount of debt-servicing that erodes away a large part of our foreign exchange earnings. We are, therefore, obliged to seriously think upon the ways & means that could help the country in achieving at least a partial self-reliance. We need to start producing and supplying goods for our own power plants. If it is accomplished properly we can reduce the volume of our imports and

also improve the level of the industrial development of the country.

## 2. Technology Transfer

2.1 Each aid-giving agency claims that the grant or loan being provided by it aims at substantial technology transfer to the developing nations. However, a meaningful achievement in this behalf depends on many factors. Two important factors are the amount of interest taken by the aid-receiving country in acquiring appropriate kind of technology and the will of the donor to allow access to the modern technology. Given that both the donor and the recipient are serious, very fruitful results can be achieved. In recent negotiations with the World Bank and the US AID it has been strongly felt that they really mean to see Pakistan standing on its own feet. Now it is upto us to decide how best we should make use of the opportunity that exists 'today' and which may not be available 'tomorrow'.

2.2 The objective of this paper is to suggest some objective steps towards acquisition of technology whereby manufacture of plant and equipment for thermal power plants could be undertaken within the country with the following purpose in mind:-

(i) Reducing foreign exchange expenditure,

(ii) Meeting power deficit,

(iii) Improving the level of industrialisation in the country,

(iv) Increasing job opportunities.

(v) Cost-effective manufacturing.

## 3. Sixth Plan Targets

3.1 WAPDA has plans to install a large number of thermal power plants in the country during the sixth plan period to meet the growing demand for supply of power.

Some of these power plants are mentioned below:-

| S.No. | Power Plant | Capacity | Year |
|---|---|---|---|
| 1. | Guddu Gas Turbine Combined Cycle. | 300/450 MW | 1985-86 |
| 2. | Jamshoro Oil-fired Steam Unit No.1. | 250 MW | 1986-87 |
| 3. | Jamshoro Oil-fired Steam Unit No.2. | 210 MW | 1987-88 |
| 4. | Kot Addu Gas Turbine Power Plant. | 400 MW | 1985-86 |
| 5. | Lakhra Coal Mine & Jamshoro Coal-fired Steam Power Plant. | 300 MW | 1990-91 |
| 6. | Multan Extension. (Oil-fired). | 630 MW | 1987-88 |

3.2 The cement industry has already been given instructions by the Government to switch over from gas to oil or coal during the sixth plan. To comply with these instructions, it is necessary to modify or replace the gas-fired boilers of the existing cement plants and to arrange new boilers as well as steam turbines for the future cement production units.

3.3 Similarly, most of other industrial concerns that may be set up in the country in the years to come will have to base their in-house steam generating plants on oil or coal, whether the steam to be generated is meant for process or for power production.

## 4. Hardware Requirements

4.1 According to rough estimates about 8,000 to 10,000 tonnes of hardware are employed in a conventional oil or gas fired steam power plant of 100 MW capacity. This is in the form of boiler, turbine, generator, piping, structural steel, pumps, motors, compressors air-conditioning plant, chemical treatment equipment,

electric switchgear, cranes, floorings, staircases, accesses and lifts etc. In a coal-fired plant, the materials are nearly 40% more than the quantum mentioned above. In a gas turbine plant, however, the hardware requirements are about half of a steam unit of equal size. Assuming a conservative figure of 2000 MW of thermal power generating plants in the next 5 or 6 years in the country, we would be talking of hardware weighing well-over 200,000 tons. Considering a modest figure of Rs. 40,000 per tonne of finished goods, we would need a minimum of Rs. 8,000 million in foreign exchange to be able to import the plant. Unluckily, the practice presently in vogue in the country will hardly permit any substantial quantity out of this bulk requirement to be supplied from within the country, and we will have to carry a tremendous burden of foreign loans. To avoid such a huge expense in foreign currencies, urgent efforts need to be made to build up indigenous capability to obtain as much materials locally as possible.

## 5. Existing Facilities in Pakistan

5.1 The Heavy Mechanical Complex at Taxila (HMC) combined with Heavy Forge & Foundries (H[illegible]), and the Karachi Shipyard and Engineering Works, Karachi (KSEW) are meeting some of the needs of small industrial units such as cement plants, sugar factories and textile industry coming up in the country. Ravi Engineering, PECO, Ittefaq Foundries, KSB and Machine Tool Factory Karachi etc., are also making their humble contribution, but none of them has ever participated in a big way.

5.2 The HMC has slowly created the capability to design, engineer and manufacture small low pressure boilers. In fact HMC has started exporting sugar plants and cement production units. There are all the fundamental facilities [illegible] respect of preparation, manufacturing,

stress relieving and testing but the technical know-how for manufacturing high-pressure steam generators and allied equipment for large power plants has yet to be developed. Nevertheless, the little basic infrastructure that exists today can be expanded into a greater complex tomorrow through a pragmatic approach which is briefly discussed in the succeeding paragraphs.

## 6. Location of new Facilities

6.1 Sufficient space is available at the present site of HMC to locate a completely new plant. Initial investments could be so programmed that the new plant alongwith the present manufacturing capability of both HMC and HFF at Taxila, should start manufacturing 30 to 40% of the equipment required in large steam power plants and 15 to 20% of that required in gas turbine units. This much capability can possibily be developed within the next one or two years with a modest investment of Rs. 50 to 100 million. Gradually, the ratio of local production should be increased to 70 or 80% in the next 5 to 10 years; any critical items that may be difficult to manufacture at this plant would naturally come from abroad.

6.2 In order to achieve such a target, the management of HMC cannot work in isolation from the main buyers like WAPDA, KESC and others. It needs a strong support of the buyers, who may take upon themselves to package the tender documents for boilers and turbines in such a manner that a certain minimum amount of hardware would be arranged from HMC Taxila and other public/private sector organisations operating in the country. This is perhaps the only way the foreign suppliers could feel obliged to work towards local manufacture.

## 7. Mechanism Required

7.1 There are several ways of putting the above idea into practice. Some of the alternative propositions are:-

(i) Licensing by leading turbine and boiler manufacturers to HMC and other local manufacturers.

(ii) Joint Ventures between one or two selected manufacturers for specific projects and Pakistani manufacturers.

(iii) Turn-key jobs to foreign suppliers with a guaranteed minimum mix of Pakistani goods.

7.2 Before any leading foreign manufacturer decides to provide a license or the technical know-how for local manufacture of his plant, it is imperative to carry out a thorough study of the estimated tonnage of production per annum and the product mix in the initial stages, followed by the estimates of progressive increase each year. This study has to be carried out with the joint collaboration of the selected foreign manufacturer of boilers or turbines, the prospective licensee, the client like WAPDA and the concerned Ministries in the Government of Pakistan.

7.3 It is not unusual for any large manufacturer to have licensees away from his homeland when he finds a genuine potential for the off-take of goods, particularly when the Government of the host country guarantees him certain protection. From the preliminary discussions held recently with the management of HMC it transpired that it was most willing to expand its factories and will accept any challenge that the new task will offer. It is also understood that the Ministry of Production has a keen desire to promote such activities and is prepared to grant all the needed safeguards. Preliminary talks with the representatives of some leading manufacturers of US and other countries indicate a positive response. But a decision to this effect has to be taken quickly at an appropriate level. Once an

arrangement is agreed upon in principle, then specialised training would have to be given to Pakistani engineers in the fields of (1) design and engineering of the equipment to be manufactured, (2) physical manufacture of various components, (3) selling the products and (4) installing, testing and commissioning the products.

## 8. Financing Arrangements

8.1 Any process of a meaningful technology transfer requires money. The quantum of finances depends on the size of the plant to be set up and the extent of technical know-how to be acquired. There is a certain cost for each sheet of a useful document supplied by the licensor. There is a fairly high cost of acquiring the services of professional personnel necessary to assist in the design and construction of the plant. There is cost involved in the training of our people in the works of foreign manufacturers. The licensor has to receive a certain agreed initial payment against which he supplies a large number of standards, specifications and technical documents which are invaluable in the process of technology transfer. The minimum annual fee is payable as compensation over a long period for the services rendered by the licensor. A substantial portion of out-of-pocket expenses has also to be paid by the licensee. In case the licensee manufactures any equipment for some other principal utilising the facilities developed with the advice and assistance of the primary licensor, a certain royalty becomes due to the latter.

8.2 For any arrangement of this kind, Pakistan should be able to spare some foreign exchange from its own resources to ensure freedom of choice of manufacturer and country. If it is not possible, then some commodity aid should be utilised for acquiring the manufacturing equipment, besides technical assistance related to it, whether it is meant for boiler parts or turbine components. In this way the process of licensing can be accelerated as the manufacturer will only have to

provide the technology and the personnel with practically no investment from his own coffers. In case of any difficulty in utilising the commodity aid the USAID or the World Bank or the Asian Development Bank could be requested to consider the financing of such a venture in the interest of upliftment of Pakistan's manufacturing capability for supplying indigenous machinery and equipment for the projects aided by them, of course on international competitive basis.

9. Recommendations

9.1 With the blessing of the Ministry of Production and the Ministry of Water & Power, HMC and WAPDA may start working together, the main theme being "Maximization of Local Manufacture". They may solicit offers from various leading manufacturers of boilers and turbines either as a part of the tender conditions of various projects or independently. Once a concrete arrangement is set up for large-scale production of plant and equipment for the projects of WAPDA & KESC, the requirements of smaller industries would be automatically catered for. Presently, the Lakhra Coal Mine & Power Station Project offers the greatest potential for such a co-operation. Later on, there will also be a huge potential of exporting our goods to neighbouring countries, thereby earning foreign exchange.

9.2 The project of Lakhra Coal Mine and Power Station - 300 MW Unit has been launched. USAID, World Bank and ADB are the potential donors of the foreign exchange cost of this project. Very soon consultants will be engaged to work out the final feasibility documents. The tenders for the mining equipment and the power plant are expected to be floated by the middle of 1985. It is the right time that the Pakistani manufacturers start working now to participate in the completion by 1989 of this coal-based project of high national priority. As USA[illegible] for the Lakhra Project will

require the purchase of equipment to be restricted to USA and Pakistan, we should invite American suppliers, particularly those having experience of manufacturing steam turbines and lignite fired boilers to discuss with WAPDA, USAID, HMC, other industrial concerns and the Government of Pakistan, various aspects of the proposal and then furnish their terms and conditions. American manufacturers would also be eligible to quote in the tender packages of those sections of the project that are financed by the World Bank and Asian Development Bank. Therefore their licensees in Pakistan would also be able to participate.

11th April 1984.

(G.M. ILIAS)
Chief Engineer
Coal Power Projects
WAPDA
193-Wapda House, Lahore

FIGURE 5.6.4

PAKISTAN ENGINEERING CO. LTD.
پاکستان انجینئرنگ کمپنی لمیٹڈ
SHAHRAH-E-QUAID-E-AZAM, LAHORE, PAKISTAN
TELEPHONE : 320225-27 325072-73
CABLE : BECOIND
TELEX : 44750 PECO PK
شاہراہِ قائداعظم۔لاہور۔پاکستان
ٹیلیفون: ۳۲۰۲۲۵-۲۷-۳۲۵۰۷۲-۷۳
ٹیلیگرام: "بیکوانڈ"
ٹیلیکس: ۴۴۷۵۰ پیکو پے کے

MD/10

May 8, 1984.

Mr. G. M. Ilias,
Chief Engineer,
Coal Power Projects, WAPDA,
193-WAPDA House,
LAHORE.

Subject: PROGRESSIVE MANUFACTURE OF BOILERS AND TURBINES IN PAKISTAN.

---

Dear Sir,

Please refer to your Paper on the subject sent under cover of your letter No.5/CE(CPP)/Pub-S, dated 25.4.1984.

2. We agree with the perceptions contained in this Paper and need for taking steps for progressive manufacture of Power Equipment in Pakistan. It is the need of the hour and of the Country. We, therefore, would be glad to lend full support to Heavy Mechanical Complex/Heavy Foundry & Forge, Taxila and Karachi Shipyard & Engg. Works, within the scope of our existing manufacturing facilities both at Badami Bagh Works & Kot Lakhpat Works for manufacture of such smaller components for the main plant manufacturers as may be necessary. Primarily, we in PECO are light engineering goods manufacturers.

3. We understand that you are already in touch with the Heavy Mechanical Complex (HMC) at Taxila etc. We would suggest that for the sort of ventures you have in view, you kindly arrange to see our existing infrastructure and facilities in respect of light engineering goods manufacturing capabilities for evaluting to what extent they can be harnessed to achieve the objectiv s set out in your Paper.

4. Apart from our regular production programme of Machine Tools, Diesel Engines, Pumping Machinery, Construction Machinery, Power Looms, Overhead Cranes, Electric Motors, Bicycles, Steel & Steel Products including Electric Transmission Towers upto 220 KV for WAPDA, we have especially designed and manufactured Gates and Gearings for various Barrages in Pakistan, fabricated parts and components for Sugar Mills, etc. in the past. Attached please find a copy of our Company's Story for further information on PECO's operations.

(Contd.....2)

BADAMIBAGH WORKS 280581-4 KOT LAKHPAT WORKS 801871 14 BRANCHES : KARACHI 232853-6 RAWALPINDI 74650
ٹیلیفون: بادامی باغ ورکس: ۲۸۰۵۸۱-۴ کوٹ لکھپت ورکس: ۸۰۱۸۷۱/۷۴ ہیڈ آفس: ۳۲۰۲۲۵ تا ۳۲۰۲۲۷-۳۲۵۰۷۲-۳۲۵۰۷۳

5. *With particular reference to the manufacture of Boilers, what perhaps we can do to help HMC/KSEW, is to manufacture and supply the following components :-*

5.1 *Coal Pulverizers, Feeders and Motors*

5.2 *Burners and Fuel Piping*

5.3 *Forced Draft Fans & Motors*

5.4 *Induced Draft Fans & Motors*

5.5 *Soot Blowers*

5.6 *Platforms and Gratings*

5.7 *Coal Handling System*

5.8 *Ash Handling System*

5.9 *Waste Treatment & Disposal System*

5.10 *Steel Structures all types*

6. *The most important pre-requisite for undertaking such gigantic task is the Technology Transfer. Unfortunately, no meaningful achievement has so far been made inspite of the reported claims for the substantial technology transfer by the aid-giving agencies. In our opinion, the requirement of technology transfer should be made a condition in the Tender so as to bind the main contractors for finding out a local partner to adopt their technology for manufacturing to their specification and drawings part of the plants locally. Local value-added advantage factor can definitely attract the Tenderers for such Projects to part with the relevant technology to avail the preference if the local content in their bids is of the order of 25% or more. This will give the following additional advantage to those stated in para 2.2 of your Paper:*

6.1 *Reducing the dependency on the foreign suppliers of the Plant and Equipment.*

6.2 *Assuring the after-sale-service of the Plant and Equipment*

6.3 *Raising the technology level within the Country.*

7. *As far the Turbines, we shall be prepared to associate ourselves for the production of component parts within the scope of our existing facilities and more if the volumes are enough. We can, perhaps, contribute up to 20% local manufacture with our existing facilities depending upon the level of technology required and re-adjustments. We have had previous working experience for the*

*(Contd.....3)*

manufacture and supply of 50 Hydel Turbines (50 KW / 100 KW) for EAD 100 Small Hydel Stations Project in the Northern Area under a Tripartite Contract with Siemens of Pakistan and Drees of Germany.

8. We are sure that with your initiative and pragmatic approach, many Engineering Industries will develop as support industries to HMC/HFF and KS&EW to help build Power Plants for the coming Projects.

Assuring our fullest co-operation,

Yours faithfully,

( SAIDUDDIN )
MANAGING DIRECTOR

Encl: As above

FIGURE 5.6.5

بسم الله الرحمن الرحيم

# KARACHI SHIPYARD & ENGINEERING WORKS LTD.

WEST WHARF
KARACHI-2
PAKISTAN

No. COM/MCL-102/MKT

DATED 13th May, 1984

Mr. G.M. Ilias,
Chief Engineer,
Coal Power Projects WAPDA,
193 - Wapda House,
LAHORE.

LOCAL MANUFACTURING OF BOILERS/TURBINE

Dear Sir,

We thank you for your kind letter No. 3/CE(CPP) dated 25th April, 1984. It is heartening to know that people at the helm of the affairs are taking keen interest in the local manufacture of hitherto imported capital engineering goods.

The list of items which can be manufactured in our works is attached at Annexure 'A'. We are anxiously waiting for the list of turbine components.

As must be already known to you, KSEW is the pioneer in Pakistan in the field of industrial boilers, and has gained sufficient experience and expertise over the years. KSEW has been manufacturing fire tubes packaged type boilers in a vast range since 1971 and has todate supplied 74 such Boilers to the various industries/mills all over Pakistan. At present we are manufacturing 80 tonne Water Tube Boiler in our yard, the largest ever yet to be made in Pakistan. This boiler is being manufactured under a collaboration agreement with Fives Cail Babcock of France; the agreement besides other plant and equipment also covers the manufacturing of water tube boilers using low grade coal, oil, gas or bagasse as fuel. We do not want to blow our trumpet too loud but would like to suggest that a careful comparative study of all the locally manufactured notable boilers must be carried out before forming any opinion about the capabilities and expertise of different local manufacturers. KSEW boilers installation all over have earned their name for the efficiency and ease of operations.

Likewise we would like to submit that we are the pioneers in manufacturing for the sugar and cement mills in Pakistan. The delivery, efficiency and cost of Faran Sugar Mill and those of its contemporaries needs your kind attention.

The remarks and recommendations in your paper are very welcomed, but please make sure that if not all, at least the major public limited concerns, already in the areas covered in your paper, are not excluded or debarred from competing. A biased opinion in favour of one company is liable to create unpleasant discouragement, inefficiencies and unhappy experiences.

The KSEW is fully capable and competent to handle the projects either on its own or in collaboration with a foreign supplier, of the client's choice also, if they so desire, and would cherish your patronage to take part, in our humble way, in the sacrosant duty of industrial progress of our homeland.

We would welcome your visit, at your convenience, to our yards to study our facilities and discuss other possibilities.

Yours faithfully,
For KARACHI SHIPYARD & ENGINEERING WORKS LTD.

(Ahmad Zamir)
Vice Admiral, H.I(M)., S.J.
Managing Director

Encls: As above.

ANNEXURE - ' A '

COMPONENTS OF 300 MW CAPACITY BOILER WHICH CAN BE MANUFACTURED IN K. S. E. W. LTD.

a) Boiler Drum and Furnace

b) Superheater and Reheater

c) Economizer

d) Air Preheater

e) Coal Pulverizers, Feeders, and Motors

f) Ducts, as required (including primary and secondary air)

g) Top Steel

h) All Support Steel from Grade

i) Platforms and Gratings

j) Coal Handling System( or parts thereof)

k) Ash Handling System(or any parts thereof)

l) Stack (Chimney)

m) Waste Treatment and Disposal System

FIGURE 5.6.6

No.SCD/ 11 /HA/1727/154
May 14, 1984.

HMC
Taxila, Pakistan

By TCS

Mr.G.M.Ilias,
Chief Engineer Coal Power Projects,
WAPDA,
193-Wapda House,
LAHORE

Sub: PROGRESS IN MANUFACTURE OF BOILERS IN PAKISTAN

Dear Sir,

Thanks for your letter ref No.2/CE(CPP)/Pub.s dated 25th April 1984., on the subject cited above.

We appreciate the proposals suggested in your paper and are pleased to state that to undertake the manufacturing of Power Plants and Turbines at Heavy Mechanical Complex Ltd., Taxila, we are planning to expand our manufacturing base for which we are preparing PC-I for submission to the government. The expansion is being planned to cover up the mannfacturing of entire mechanical components. It will not be out of place to mention that even now a large number of components can be manufactured even with the existing manufacturing facilities. We are enclosing the list of components of Power Plants indicating generally the possibility of their manufacturing now and after balancing. More precise information can be provided after studying the drawings.

after redesigning facility to handle this mfg.

We are confident that we shall be able to meet delivery schedule desired by the client, if given reasonable schedule of delivery required for manufacture. Regarding prices we have been internationally competing both within the country and abroad and are therefore sure to be competitive.

As a proposal we suggest that at least one Thermal Power Plant be given to HMC as a trial order for its manufacture in our workshops against local financing. This will help us in sorting out initial production problems as well teething problems which may arise during manufacturing and erection of the plant. This will provide us a strong footing in competing against the international tenders which normally are called due to international financing. We once again thank you for your interest and cooperation extended in this matter.

Thanking you, we remain.

Yours faithfully

(HASNAIN AKHTAR)
for MANAGING DIRECTOR

HEAVY MECHANICAL COMPLEX LIMITED
Taxila, District Rawalpindi, Pakistan
Telephones: Rawalpindi 051-67241 67242 67243 0596-921
Telex : 5607 HMC PK Cable: HEAVYMECH TAXILA

## COMPONENTS OF 300 MW CAPACITY BOILER

### ITEMS - MAY BE MANUFACTURED RIGHT NOW

- Economizer.
- Coal Pulverizers, Feeders & Motors.
- Burners and Fuel Piping.
- Ducts, as required (including primary & secondary air)
- Top Steel.
- All Support Steel from Grade.
- Platforms and Gratings.
- Coal Handling System (or any parts thereof).
- Ash Handling System (or any parts thereof).
- Stack (Chimney)
- Waste Treatment and Disposal System.

### ITEMS - MAY BE MANUFACTURED AFTER BALANCING,

- Boiler Drum and Furnace.
- Superheater and Reheater.
-

### ITEMS - MAY BE DECIDED FOR MANUFACTURE AFTER STUDYING THE DRAWINGS.

- Air Preheater.
- Particle Removal System (Electrostatic Precipitators.)

### ITEMS - TO BE IMPORTED /PROCURED

- Boiler Controls.
- Burner Controls.
- Boiler Trip Controls.
- Primary Air Fans and Motors.
- Forced Draft Fans and Motors.
- Induced Draft Fans and Motors.
- Soot Blowers.
- Valves and Piping.
- Insulation and Lagging.
- Tools.
-

....

FIGURE 5.6.7

# Pakistan Machine Tool Factory Limited

Our Ref.No.GM(E)-630-103 Dated:- 20.5.1984

Mr. G.M.Ilyas,
Chief Engineer,
Coal Power Projects,
WAPDA, 193 Wapda House,
L A H O R E.

SUBJECT:- PROGRESSIVE MANUFACTURE OF BOILERS AND TURBINES IN PAKISTAN

Dear Sir,

Reference your letter No.4/CE(CPP)/PUL-S, dated 25.4.1984.

We congratulate you on your commendable efforts and wish you god speed in your endeavours. As an introduction to the subject, the paper written by you is quite comprehensive and we would only re-state the three proposals put forth by you in para 7.1. As is the theme of your paper, a concerted, well thought out, and planned effort is required for long term and meaningful benefits to accrue to the nation.

You may be aware, that we are not, atleast at present, equipped for the manufacture of boilers and turbines which falls more into the domain of our sister unit, Heavy Mechanical Complex, Taxila. We are basically equipped for production of gears and components requiring



Contd...P/2....

Landhi Karachi-34 (Pakistan), Tel. (90) 33 02 23 & (90) 33 00 54 (3 Lines) Telegrams: PEMTEF KARACHI Telex (02) 5300 PMTF PK

precision machining. Besides, as much as we would like to participate in the proposed manufacture of boilers and turbines, in the absence of drawings and specifications, we are unable to comment meaningfully on our capability for manufacture, of meeting schedules, and if we are internationally competetive.

We are, however, enclosing a statement regarding our products and machining facilities from which you may judge the extent of our usefulness in this context.

Yours faithfully,
PAKISTAN MACHINE TOOL FACTORY LTD.

(Mir Raza Ali)
General Manager (Engg)

Encl: As above.

## P R O D U C T S

### Machine Tools:

| | | | |
|---|---|---|---|
| Milling Machine: | Two sizes of Knee Type Horizontal, Universal, and Vertical Milling Machines: | | |
| | -Model LK4, | Table size<br>Spindle Motor | 225 x 1050 mm<br>3 HP. |
| | -Model LK6, | Table size<br>Spindle Motor | 325 x 3300 mm<br>5 HP |
| Hand Operated Milling Drilling and Boring Machine with Copy Milling Device: | Table size<br>Main Motor | | 225 x 1050 mm<br>3 HP- |
| Centre Lathe | Swing over bed | : | 365 mm |
| | Distance between centres | : | 1000 & 1500 mm |
| | Spindle Motor | : | 4/3 HP |

**Automotive Assemblies & Components.**

- Complete Gear Box and Rear Axle of Bedford truck Model CJQ 3BZO being manufactured and assembled for supply to M/s.National Motors Limited.
- Various components of Transmission and Rear Axle of Massey Ferguson Tractor, Model MF-240, being manufactured and supplied to Millat Tractor Ltd., Lahore.
- Railway Traction Pinion with hardened and ground teeth being manufactured for Pakistan Railways.

**Pressure Die Casting**

Gas Meter, Diesel Engine and Motor Cycle components, are diecast, machined, and supplied to Karachi Gas Company, Bela Engineering, and Awami Autos Ltd., respectively.

Contd...P/2...

## F A C I L I T I E S

i) Machining:

| | | |
|---|---|---|
| Turning | : | Centre Lathe, turret and capstan lathe, copying lathe, autoratic lathe and multispindle bar autos. |
| Grinding | : | Universal, plain, surface, centreless, and spline. |
| Milling | : | Knee, bed type, key way, and thread milling. |
| Drilling | : | Radial arm, pillar type, and multispindle. |
| Gear Cutting | : | Hobbing, rack and circular type, gear shaving, gear teeth grinding and Oerlikon spiral bevel gear generators and lapping machines. |
| Broaching | : | Vertical |
| For Castings | : | Horizontal & vertical boring, planing, plano milling, and slideway grinding. |

ii) Tool Room: Equipped with precision machine tools including copy turning, copy milling, jig boring, thread grinding and spark erosion machines for the manufacture of jigs, fixtures, forging dies, gauges, cutting tools, etc.

iii) Ancillary facilities : Heat and Surface Treatment, Pressure Die casting, Wood Working and Pattern Making and Sheet Metal Welding, Forging, Painting, Crack Detection and Material Testing.

P.S. Several CNC lathes and a Machining Centre are also being installed.



384

LAKHRA POWER FEASIBILITY

SYSTEM DESIGN DESCRIPTIONS

I. Main Cycle

II. Main and Reheat Steam

III. Condensate

IV. Boiler Feedwater

V. Extraction Steam

VI. Circulating Water

VII. Makeup and Service Water

VIII. Potable Water

IX. Water Treatment

X. Closed Cooling Water

XI. Auxiliary Steam

XII. Service and Instrument Air

XIII. Ash Handling

A. Fly Ash
B. Bottom Ash

XIV. Flue Gas and Air Quality Control

XV. Wastewater

A. Sanitary Waste Treatment
B. Industrial Waste Disposal

XVI. Fire Protection

XVII. Control Building HVAC

XVIII. Cycle Makeup Treatment Systems

XIX. Plant Coal Handling Dust Control

SYSTEM DESIGN DESCRIPTIONS
(Continued)

XX. Coal Handling

XXI. Electrical Power Supply

XXII. Emergency Power Supply

XXIII. Instrumentation and Control System

# I. MAIN CYCLE

A 12,410 kPa (1,800 psig) 7 heater cycle was chosen as the power plant cycle for the Lakhra Power Feasibility Study. The turbine selected is a 3,000 rpm tandem-compound, two-flow, reheat steam turbine generator with 12,410 kPa (1,800 psig), 510/510°C (950/950°F). There are 5 low pressure heaters including the deaerator and 2 high pressure heaters. Guaranteed gross output is 389 MW @ 3.5" HgA backpressure and 3 percent makeup. At valves wide open (VWO), output is 414 MW @ 2.5" HgA with 0.5 percent makeup with final feedwater temperature at 241°C (460°F). The cycle is illustrated by Appendix B, Figures 5.5.4I-1 through 5.5.4I-4, Lakhra Power Feasibility Heat Balances. Further details of main cycle equipment are discussed in the subsequent system description included herein.

The superheater outlet of the steam generator will deliver main steam at 13.2 MPa (1,915 psia) and 513°C (955°F) to allow for a pressure drop of not more than 690 kPa (100 psi) to the turbine throttle valves and assure that steam temperature will be 510°C (950°F) at the throttle valves.

The high pressure steam turbine and intermediate pressure steam turbine will be on a common shaft and the double flow low pressure steam turbine will be on its own shaft. The high pressure turbine exhaust will supply steam to the top high pressure feedwater heater and to the reheater section of the boiler. There will be one extraction point in the intermediate pressure turbine for the first high pressure heater. The intermediate pressure exhaust steam will supply steam to the deaerating heater, the auxiliary steam header and the double flow low pressure turbine. There are four extraction points on the low pressure turbine for the four low pressure feedwater heaters. The low pressure turbine exhaust steam is directed to the condenser.

The use of motor-driven boiler feed pumps and BFP booster pumps allows sufficient room in the condenser neck for either two duplex feedwater heaters or one duplex feedwater heater. The actual arrangement will be a function of the specific turbine and condenser arrangement and as such would be determined during design when these equipments have been purchased. Low pressure feedwater heaters Numbers 3 and 4 will be on the turbine operating floor. The high pressure feedwater heaters Numbers 6 and 7 will be located on the operating floor in the heater bay. Feedwater heater Number 5 is the deaerating heater which is connected to and located above the elevated storage tank in the heater bay.

The turbine guaranteed output is at 95 percent of valves wide open. The gross turbine output of 389,300 kW at this load will provide a nominal 350 MW to the WAPDA system when auxiliary power usage is at 10 percent of the gross turbine output. The guaranteed load was calculated at 11.85 kPa (3.5" HgA) to allow for the highest summer cooling water temperatures that the condenser is expected to experience, and was based on 3 percent makeup to the cycle to allow for plant uses of auxiliary steam. At back pressures less than 3.5" HgA and at makeup rates less than 3 percent turbine net to the WAPDA system will be at least 350 MW.

The turbine cycle has also been calculated at a Valves Wide Open (VWO), condition with 8.5 kPa, (2.5" HgA) back pressure and 0.5 percent make up to size

the generator at 487 MVA based on a power factor of 0.85. The turbine is specified to operate with the top feedwater heater out of service at an output not to exceed the generator rating. Such a condition will be at a main steam throttle flow less than VWO flow but at an increased reheater steam flow. The last stage blades in the LP turbine will not exceed their design flow limit if the turbine is purchased for 95 percent of that limit at VWO with all feed heaters in service.

## II. MAIN AND REHEAT STEAM

### 1.0 SYSTEM FUNCTION

The Main Steam System is designed to convey main steam from the boiler superheater outlet to the high pressure turbine stop valves in a single pipe, branching to individual turbine leads to the turbine control valves.

The Reheat Steam System is designed to convey steam from the high pressure turbine exhaust, in a single pipe, to the boiler reheater and from the boiler reheater outlet to the intermediate pressure turbine stop valves, in a single pipe.

### 2.0 SUMMARY DESCRIPTION

The major components of the Main and Reheat Steam System are the steam generator (superheaters, reheater, and attemperators), main and reheat steam piping, and the main turbine (HP and IP).

The main steam system is capable of passing 1,312.2 tonnes/hr (2,893,000 lb/ hr) of steam at 12,410 kPa (1,800 psig) and 510°C (950°F) to the HP turbine at the valves wide open condition. The superheated steam from the boiler leads to the stop valves of the HP turbine.

The main steam pipes leading to the HP turbine stop valves are provided with warm-up and drain connections. The warm-up drain piping ("Turbine bypass") is manifolded into a single pipe with a motor operated valve. This motor operated valve is controlled from a control switch located on the main control panel. The valve is open during hot and warm starts until steam temperature is raised to within the acceptable range of turbine metal temperature. The warm-up drains are passed through an on-off desuperheater before entering the condenser. The desuperheater spray, from the condensate system, is actuated when the motor operated warmup valve starts to open.

Superheated steam temperature is controlled by tilting fuel nozzles in unison to raise or lower the flame in the furnace to control heat absorption or by use of proportioning dampers and desuperheating sprays. Final superheat temperature, as controlled by the combustion control system, is automatically maintained at set point by the controlled ratio of fuel to feedwater over the load range. As an overriding control feature for interim changes of steam flow or final steam temperature, spray water is used to maintain a constant steam temperature at the outlet.

The boiler reheat outlet steam temperature is controlled by tilting of nozzles by the combustion control system or backpass gas proportioning dampers. Desuperheating spray water from the boiler feed pumps bleed point is sequenced into the control for automatic operation on an emergency basis only.

Manual operation of the superheat and reheat tilting nozzles or gas dampers and the desuperheating sprays can be accomplished through hand-auto stations provided for each system, which are mounted on the main control panel.

The exhaust from the HP turbine (cold reheat) is combined into a single pipe and returned to the boiler for reheating. The cold reheat piping is sized for a pressure drop equal to 2 percent of the high pressure exhaust pressure, permitting 3 percent of H.P. exhaust pressure as the allowable drop in the hot reheat piping.

A branch connection from the cold reheat piping supplies steam to HP heater 2.

A large drip pot is located at the low point of the cold reheat pipe where condensation accumulates. The drip pot is provided with a diaphragm operated level control valve. There is a pressure differential transmitter used to monitor level in the drip pot. The output from this transmitter goes to a signal monitor used for annunciation and to an electric pneumatic convertor that is used to modulate the drip pot level control valve. The drip pot level control valve drains to the condenser.

Desuperheating spray water for the reheat desuperheaters is from the boiler feed pumps' interstage bleed.

The hot reheat system combines the piping at the boiler outlet into a single alloy steel pipe and branches to two pipes leading to the IP turbine intercept valves.

## 3.0 DESIGN CRITERIA

The Main Steam System is all welded construction in accordance with the ASME Boiler and Pressure Vessel Code, Section I. Alloy steel material (ASTM A335, Grade P11) is used for the main steam piping.

The Reheat Steam System is all welded construction in accordance with ANSI B31.1. Hot reheat piping is alloy steel A335 P11. Cold reheat piping is carbon steel A 106 Gr. B seamless.

The Main Steam, Hot Reheat and Cold Reheat Systems will be designed per ASME Standard TWDPS-1, Recommended Practices for the Prevention of Water Damage to Steam Turbines for Electric Power Generation.

The "pipe sizing" flow rates are as tabulated on the Heat Balance Diagrams HB-1 and HB-2. Flow rates on HB-2 are those occurring during turbine VWO condition. Design pressures will comply with ASME Boiler and Pressure Vessel Code, Section 1 and ASME B31.1, Power Piping Code. The main steam piping system is designed for a total pressure drop of 690 kPa (100 psi) at MCR, while limiting steam velocity to 76 meters per second (250 feet per second). The hot and cold reheat piping is also limited to 76 meters per second (250 feet per second) velocity.

The preceding design limits are approximate values. Initial design of reheat piping allows for an approximate total of 350 kPa (51 psi) drop in the reheat system, subdivided approximately as follows:

| | |
|---|---|
| Cold Reheat Piping | 55 kPa (8 psi) |
| Reheater | 180 kPa (26 psi) |
| Hot Reheat Piping | 115 kPa (17 psi) |

The final design of the reheat system will depend on an economic optimization of the hot and cold reheat piping.

The turbine bypass is sized for 25 percent of the main steam throttle flow. The bypass flow goes to the condenser after pressure and temperature reduction. The bypass allows improvement in turbine start-up times as well as overall boiler warmup time.

# III. CONDENSATE SYSTEM

## 1.0 SYSTEM FUNCTION

The Condensate System is designed to pump and transport condensate from the hotwell of the condenser, through the steam seal exhauster, and four stages of feedwater heating, to the deaerator, for heating and deaeration.

The Condenser Fill System is designed to store condensate in an outside tank and to continuously add condensate to the condenser to maintain hotwell level.

The Condenser Vacuum System is designed to evacuate non-condensibles from the condenser prior to startup, and to maintain condenser vacuum at all loads.

## 2.0 SUMMARY DESCRIPTION OF THE SYSTEM

The condensate system for each unit consists of one, dual shell, single pressure, two pass, transverse, main condenser; three 50 percent capacity, motor driven, vertical condensate pumps; one steam seal exhauster; five stages of feedwater heating (including the deaerator), two 100 percent capacity vacuum pumps, and condensate storage tanks.

The first two stages of feedwater heating, heater Nos. 1 and 2, are two 100 percent, shell and U-tube exchangers installed in the condenser necks. Heater Nos. 3 and 4 are 100 percent capacity, shell and U-tube heat exchangers. The fifth stage is the deaerator.

The condensate storage tanks are dome-roof, field erected, steel tanks. The interior surfaces of the tanks are sand-blasted and coated with an epoxy paint.

Non-condensibles are removed from the condenser, by two 100 percent capacity vacuum pump packages.

Condensate from the condenser hotwell flows to each pump suction through separate suction pipes, each with a temporary single basket strainer for start-up, a shutoff valve, and an expansion joint at the pump.

At full load, with two of the 50 percent capacity pumps operating at rated speed, 309 l/s (4900 gpm) of condensate is delivered to the system. The third pump will start automatically on a trip of any of the two operating pumps. Condensate is delivered to a common discharge header. Each pump discharge is equipped with a check valve, a gate valve, and a minimum flow recirculation line to the condenser. The minimum flow recirculation valve opens automatically on a signal from a differential pressure switch.

Condensate from the header flows through the steam seal exhauster, then to the feedwater heaters in the condenser necks. A check valve is located in the header, downstream of the steam seal exhauster, to prevent complete drainage of the vertical header, on a pump trip.

A main recirculation line is provided to recirculate pump flow from the header (between the steam seal exhauster and the check valve), to the condenser. The flow control valve in this recirculation line is set to pass the minimum allowable flow for the steam seal exhauster, during times when there is no unit load. This valve is modulated by a signal from the flow nozzle located downstream of the steam seal exhauster. A full flow bypass is provided around the gland steam condenser. This will permit the turbine to remain in operation with a tube side leak in the gland condenser since the motor driven exhausters will maintain gland vacuum, at a reduced efficiency, without cooling.

A three-way bypass valve provides a common bypass for the heaters in the condenser neck with a stop-check at each heater outlet. The three-way valve and isolation valve are motor operated, with control switches on the main control board. These valves also switch automatically to heater bypass, on high-high heater level, to protect the turbine from water induction in accordance with ASME Standard TWDPS-1.

The condensate discharges from the heaters in the condenser neck and is directed to the condensate to low pressure heater No. 3 and then to heater No. 4. Each heater inlet is equipped with a three-way bypass valve. The three-way valve is motor-operated from a control switch located on the main control board. A stop-check valve is provided at the outlet of each heater.

The condensate then flows from heater No. 4 to the deaerator.

Feedwater heater Nos. 1, 2, 3, and 4 are shell and U-tube heat exchangers, with condensate inside the tubes, and extraction steam on the shell side. The inlet valves at each heater have external bypass valves for pressurizing the heater tubes prior to start-up.

Branch connections, from the main condensate header, supply condensate to satisfy the additional plant condensate requirements. These requirements include:

<u>High Pressure</u>

Closed cycle cooling water head tank
Turbine bypass desuperheater
Sealing water for BFP seals and condenser expansion joints
Condensate demineralizer pump seal
Makeup to auxiliary boiler deaerator

<u>Low Pressure</u>

Condensate spill to the condenser and storage tank
Condensate drain manifolds
Vacuum pump makeup
Heater drain valves

## 3.0 DESIGN CRITERIA

The condensate system is all welded construction in accordance with ANSI B31.1. Piping is carbon steel A106 Gr. B seamless. Valves are in accordance with ANSI B16.5 and B16.34.

Design pressures, temperatures, and flow rates are on heat balances HB-2. Flow rates on HB-2 occur during boiler 100 percent load and turbine VWO conditions.

The condensate system is designed to meet the flow and pressure requirements at all expected conditions and to provide stable operation during the most severe transient condition. The most severe transient occurs on a full load trip, with the condensate pump running back at maximum speed to minimum recirculation flow.

The condensate system is capable of responding to a 10 percent stepload or 5 percent (per minute) ramp change without major deviation from normal operation.

The feedwater heaters are designed, fabricated, inspected, tested and stamped in accordance with the ASME Boiler and Pressure Vessel Code, Section VIII, Division 1, latest edition, and the Heat Exchange Institute (HEI) Standards for Closed Feedwater Heaters, latest edition. The low pressure heaters have a 2.8°C (5°F) terminal difference and 5.6°C (10°F) drain cooler approach. Tube material is 304 stainless steel.

The condenser shell and waterside are designed to be in accordance with the requirements of the seventh edition of the HEI Standards for Steam Surface Condensers, Section 6, Condensers Construction Standards. The condenser is a two pass, single pressure, transverse condenser with 3 minutes condensate storage. Condenser rise is 11°C (20°F). Tube material is 304 stainless steel with tubes 25 mm (1") in diameter.

The deaerator and deaerator storage tank are designed, fabricated inspected, tested and stamped in accordance with the ASME Boiler and Pressure Vessel Code, Section VIII, Division 1, latest edition, and the HEI Standards. The deaerator storage tank has a storage capacity of 6 minutes and will be designed to limit oxygen content to .005 cc/liter.

The condensate storage tanks are designed in accordance with AWS D5.2 (AWWA D100) Standards for Steel Tanks, Standpipes, Reservoirs and Elevated Tanks, for Water Storage.

The condensate pumps will be vertical can-type with cast iron casing and stainless steel impellers. They will be designed for the VWO of low rate and at least 5 percent margin. The design pressure will be based on the pressure drop from the system components, piping, and the static head between the deaerator and the pumps.

# IV. BOILER FEEDWATER SYSTEM

## 1.0 SYSTEM FUNCTION

The Boiler Feedwater System for each unit is designed to pump feedwater from the deaerator storage tank, through two stages of high pressure feedwater heating, to the economizer inlet of the steam generator. During all modes of operation, the feedwater system provides heated water required to satisfy the boiler steaming requirements.

The major components of the boiler feedwater system for each unit are three half capacity motor driven boiler feedwater booster pumps, three half capacity motor driven main boiler feedwater pumps, and two full size high pressure feedwater heaters.

## 2.0 SUMMARY DESCRIPTION OF THE SYSTEM

The boiler feed booster pump suction from the deaerator storage tank to each pump is through individual pipes. The suction piping includes an isolation valve (motor operated) and a permanent, single basket strainer.

The suction isolation valves include limit switches which are interlocked with the associated booster pump motor to prevent starting the pump when the valve is not in the "Open" position. Tripping will occur on motor overload, low lube oil pressure, or suction valve not fully open. Starting permissives are sufficient lube oil pressure, recirculation valve "Open," and suction valve "Full Open." When operating with one booster pump, tripping automatically starts the standby pump.

Alarms in the main control room annunciate on low lube oil pressure, high vibration, and high bearing metal temperature on either pump or motor bearings.

Booster pump recirculation is controlled by a flow (DP) switch across an orifice located in the discharge of each pump. This flow signal controls an on-off recirculation valve for each pump, returning flow to the deaerator. The recirculation lines are connected to the pump discharge ahead of any valves

The booster pumps are located on the ground floor, with the boiler feed pump booster pumps and discharge to the main feedwater pumps on a common shaft. Feedwater flows from the booster pump discharge header to each main feedwater pump.

The discharge of each main feedwater pump flows through a balanced-type tilting disc check valve and a motor-operated wye-pattern stop-check valve to a common discharge line. The main boiler feed pump discharge piping is designed for 19,305 kPa (2,800 psig) design pressure.

The superheat desuperheating and bypass system desuperheating spray water is taken off the boiler feed pump discharge upstream of the first high pressure heater. Reheat desuperheating spray water is taken from an interstage bleed on the main feedwater pumps.

Main feed pump warmup is accomplished by bypassing the pump suction isolation valve, bleeding deaerator water through the pump, and dumping to the condenser through a self-regulating back pressure control valve. The feedwater booster pump suction valve is to be open for warm-up.

Main feedwater pump recirculation is controlled by a flow (DP) switch across an orifice located in the suction of each pump. This flow signal controls an on-off recirculation valve for each pump, returning flow to the deaerator. The recirculation lines are connected to the pump discharge ahead of any valves.

For each unit the feedwater flows from the main feed pumps through one high pressure heater string. The heater string has two 100 percent size heaters arranged in series with upstream and downstream isolation valves. The upstream isolation valve is a motor-operated three-way valve and the downstream isolation valve is a motor operated stop-check valve. A 100 percent capacity bypass line is piped common to each heater from the three-way valve.

The HP heater tubing will be stainless steel.

A flow nozzle downstream of the highest pressure (on top) heater measures the feedwater flow to the boiler.

For control of feedwater flow during start-up, a pneumatically operated flow control valve is provided at the economizer inlet, piped in parallel with the main stop-check valve. This control valve is positioned from the control system which controls feedwater flow. A stop-check valve is also provided following this control valve.

## 3.0 DESIGN CRITERIA

The boiler feedwater system is all welded construction in accordance with ANSI B31.1, and the ASME Boiler and Pressure Vessel Code, Section I. Carbon steel, A106, Gr. B pipe will be used throughout the system. HP heaters are designed, fabricated, inspected, tested and stamped in accordance with ASME Boiler and Pressure Vessel Code, Section VIII, Division 1, latest edition, and the Heat Exchange Institute (HEI) Standards for Closed Feedwater heaters, latest edition.

The operating pressures, temperatures, and "pipe sizing" flow rates are on heat balance diagrams HB-1 and HB-2. Flow rates on HB-2 are those occurring during boiler MCR and turbine VWO. Pipe velocities for line sizing are generally limited to 6 meters per second (20 feet per second). The velocity entering the feedwater heaters is limited to 2.6 meters per second (8.5 feet per second). The maximum heater

tubeside pressure drop, including inlet and outlet losses, is limited to 103 kPa (15 psi).

The high pressure heaters are horizontal shell and tube with integral drain cooling and desuperheating sections designed for 0°C (0°F) terminal difference with 5.6°C (10°F) drain cooler approach temperature. Tube material is 304 stainless steel.

# V. EXTRACTION STEAM SYSTEM

## 1.0 SYSTEM FUNCTION

The Extraction Steam System is designed to convey extraction steam through the following routes:

From HP Turbine to HP Heater 2
From IP Turbine to HP Heater 1
From IP Turbine to Deaerator
From LP Turbine to LP Heater 4
From LP Turbine to LP Heater 3
From LP Turbine to LP Heater 2
From LP Turbine to LP Heater 1

## 2.0 SUMMARY DESCRIPTION OF THE SYSTEM

The major components of the extraction steam system are the HP, IP, and LP turbines, HP feedwater heaters, the deaerator, and LP feedwater heaters. All of these major components relate to other systems, and are described in other system design descriptions.

Steam is extracted from the main turbine for feedwater heating and combustion air heating. Seven stages of the turbine provide extraction steam.

The first extraction is from the cold reheat which is the exhaust of the HP turbine. This extraction provides steam to HP feedwater heater 2. The extraction line off the cold reheat header is a single pipe, to the inlet of the boiler reheater.

The second extraction is from the intermediate pressure turbine, and it provides steam to HP feedwater heater 1. Steam for the combustion air preheating coils is also taken from this extraction.

The third extraction is from the exhaust of the intermediate pressure turbine, and it provides steam to the deaerating feedwater heater.

The fourth, fifth, sixth and seventh extractions are from the double flow low pressure turbine and they provide steam to low pressure feedwater heaters No. 4, 3, 2 and 1.

The turbine is protected from overspeed on turbine trip, from flash steam reverse flow from the heaters through the extraction piping to the turbine. This protection is provided by positive closing, balanced disc non-return valves located in all extraction lines except the lines to the LP feedwater heaters 1 and 2 in the condenser neck. The extraction non-return valves are located only in horizontal runs of piping and as close to the turbine as possible to comply with the Recommended Practices for the Prevention of Water Damage to Steam Turbines Used for Electric Power Generation, ASME Standard No. TWDPS-1.

Extraction non-return valves are located in the steam headers supplying LP Heaters 3 and 4 and HP Heaters 1 and 2 and the steam header serving the deaerator.

Water is prevented from entering the turbine through the use of motor-operated gate valves in each branch of the extraction piping. The header to the deaerator has two extraction non-return valves.

The motor-operated gate valves close automatically on an emergency high-level signal from a level switch located on the heater being supplied with steam.

There are no valves in the extraction piping to LP heaters 1 and 2 in the condenser neck. The emergency high water level switches are interlocked to bypass the condensate on the channel side of these heaters.

## 3.0 DESIGN CRITERIA

The extraction steam system is all welded construction in accordance with ANSI B31.1. All extraction piping is carbon steel A-106, Gr. B seamless.

The design pressures, temperatures, and "pipe sizing" flow rates are as tabulated on the heat balance HB-2. Flow rates on HB-2 are those occurring during turbine VWO. Extraction pipe sizing is based on pressure drop, as a percent of normal (design) extraction pressure, depending on the results of an economic study. Steam velocity is limited to 5 meters per second (1,000 feet per minute) per inch of internal diameter. Pressure drops are limited to 3 percent of the extraction nozzle pressure.

# VI. CIRCULATING WATER SYSTEM

## 1.0 SYSTEM FUNCTIONS

The primary function of the circulating water system is to condense the turbine exhaust steam in the condenser and to reject this heat to ambient air via the cooling towers.

The secondary function of this system is to provide cooling for the closed cycle cooling water system heat exchanger.

## 2.0 SUMMARY DESCRIPTION

The circulating water system for each unit is comprised of two 50 percent circulating water pumps, a single pressure two-pass condenser, a mechanical draft cooling tower, circulating water piping, a chlorination system, and a condenser tube cleaning system.

Operation of system is such that at the cooling tower, the water cascades over the tower fill, is cooled primarily by evaporation, and is collected in the cooling tower basin. Air flow through the cooling tower fill is induced by fans and can be regulated by varying the number of fans in operation. Drift eliminators are used to remove entrained water droplets in the air discharging from the tower. Makeup water, to replace evaporated water, blowdown and drift, enters the cooling tower basin through a motor operated, automatic control valve. Water flow through the tower can be regulated by varying the number of circulating water pumps in operation and/or the number of cells receiving water.

Water at the basins flows through a flume to the circulating water pumps which pump water through the condenser and the closed cycle cooling water system heat exchangers then back up to the top of the cooling towers.

The chlorination system injects chlorine into circulating water system to limit biological growth which could inhibit heat transfer in the condenser and closed cycle cooling water system heat exchanger tubes.

The condenser tube cleaning system cleans the condenser internal tube surfaces periodically so that heat transfer is not inhibited in the condenser tubes.

## 3.0 DESIGN CRITERIA

The circulating water system is designed to provide an optimum combination of condenser and cooling tower to match the turbine exhaust conditions over the load range predicted for the plant. This results in selection of circulating water flow rate and temperatures to match the condenser and cooling tower and to suit the atmospheric conditions at the site.

The pumps are started with the discharge valve at a maximum 15° open. After a five second time delay, the discharge valve begins to open fully. A pressure transient analysis of the entire circulating water system is made to ensure that sudden power failure, and the resultant simultaneous shutdown of all the pumps, will not cause damage to the system. The analysis is used to determine the speed of the discharge valve closure.

The circulating water flume is designed for a velocity of .3 m/sec (one foot per second) and uniform distribution to each pump. The flume and cooling tower basin are reinforced concrete construction.

All large valves are motor operated butterfly type.

All equipment is in accordance with the latest design standards for electric power plant service.

The cooling tower is mechanical draft, counterflow, concrete designed to remove a heat load of $2.07 \times 10^9$ kJ/hr ($1.96 \times 10^9$ Btu/hr) with a design approach of 5.6°C (10°F). Design cold water temperature is 34°C (93°F) and design hot water temperature is 45°C (113°F).

Each of the two 50 percent circulating water pumps for each unit is designed per Hydraulic Institute Standards for a flow of 6,443 l/s (102,125 gpm) at 24.4 m (80 ft) of head. The circulating water system has a design pressure of 620 kpa (90 psig), to enable it to handle pump shut-off head and the transient spikes during pump failure, start-ups and shutdown. Design of the condenser is discussed in the condensate system description.

Circulating water conduit water velocity shall be held to a maximum of 2.5 m/s (8 ft/s).

# VII. MAKEUP AND SERVICE WATER SYSTEM

## 1.0 SYSTEM FUNCTIONS

The makeup and service water system is designed to supply makeup water to the cooling tower, replacing losses due to evaporation, drift and blowdown. Additionally, makeup water is supplied for the ash handling system and, if used, the FGD system. The system also supplies water for air heater wash, pump seals, demineralizer, fire protection and potable water.

## 2.0 SUMMARY DESCRIPTION

The major components of this system are:

a. Makeup water pumps
b. Trash racks
c. Traveling screens
d. Screen wash water pumps
e. Makeup control valve
f. Holding ponds
g. Storage tanks
h. Makeup water piping from the Indus River to the plant

Water is supplied to the system by one of three 50 percent capacity, vertical wet-pit type, makeup pumps, through trash racks and traveling water screens from the Indus. There are three 50 percent capacity vertical wet-pit type, screen wash water pumps, with suctions downstream of the traveling screens. Either pump will operate to wash one or both screens, automatically or by manual control.

Water is pumped to onsite storage ponds which settle out some suspended solids and provide an emergency storage for the makeup water system. The water supply is pumped from the storage ponds through reactor clarifiers and filters to remove suspended solids and some hardness. Makeup to cooling towers can be unfiltered or filtered, depending upon raw water suspended solids concentration. Water for other plant services is treated and stored in a tank until used.

## 3.0 DESIGN CRITERIA

Pipe is seamless carbon steel ASTM A 106 Grade B. Valves are carbon steel. Butterfly type valves are provided for all sizes 150 mm (6 inches) and larger. Pipe sizing is based on economic considerations.

Three trash racks and three 50 percent capacity traveling screens with 10 mm (3/8 inch) mesh are provided to remove large particles of dirt and debris from the service cooling and cooling tower makeup water.

One 100 percent capacity cooling tower makeup pump for each unit runs continuously at all loads and during shutdown when cooling load is required. A second 100 percent capacity pump is provided as standby.

The system is designed for operation at all loads including shutdown requirements.

Water flow limits, at design load, for summer and winter, are as shown on Appendix B, Figure 5.5.3-1, Water Balance Diagram.

# VIII. POTABLE WATER SYSTEM

## 1.0 SYSTEM FUNCTION

This system supplies potable water for the power plant and worker's colony.

## 2.0 SYSTEM DESCRIPTION

Potable water for plant personnel use and the associated worker's colony will be the filtered water from the water treatment plant which will be stored in an elevated tank. The elevated tank will be used for both fire protection water and the potable water. A standpipe will be used in the storage tank to supply water for potable use to the distribution system in the worker's colony and within the plant.

## 3.0 SYSTEM DESIGN

The elevated tank will be a steel tank. The tank will be 3,800 $m^3$ (1,000,000 gallons) capacity. Approximately 950 $m^3$ (250,000 gallons) is reserved for fire fighting water while the remaining 2850 $m^3$ (750,000 gallons) will be used to supply the potable water system. A standpipe will be used to withdraw water for potable use while maintaining the fire fighting water reserve capacity. The distribution system will consist of underground water mains of varying sizes but not less than 100 mm (4") diameter ductile iron pipe. The distribution system will be designed to maintain a residual pressure of 138 kPa (20 psi) at the farthest point in the system. A minimum chlorine residual will also be maintained throughout the system.

# IX. WATER TREATMENT

## 1.0 SYSTEM FUNCTION

The water pretreatment plant will treat the incoming Indus River water (see Makeup and Treatment Water System Description). Treatment will remove suspended solids and some hardness.

## 2.0 SUMMARY DESCRIPTION

The makeup water pretreatment system treats the incoming water from the on-site ponds or from the Indus River. Three 50 percent flow rate reactor clarifiers will be used to treat the water. Alum, lime and a polymer (if required during high flow conditions) will be added. Clarified water will be filtered through pressure filters filled with graded anthracite. Service water and water for inplant use will be stored in a filtered water storage tank. Makeup water for the circulating water system can be either clarified water or filtered water. Makeup water for the boiler feed system will be treated further in demineralizer trains, as described in the Makeup Demineralizer Description.

## 3.0 DESIGN CRITERIA

The makeup water pretreatment system is designed to treat the influent water to remove turbidity, suspended solids and a portion of the hardness. The system is designed for gravity flow from the ponds to the clarifiers or pumped water from the river. Clarified effluent will be pumped through the train of pressure filters to remove additional suspended solids, turbidity and precipitated floc particles. Clarifier sludge will be routed to the miscellaneous waste evaporation pond. Filter backwash is routed to Bottom Ash Sluice pond. Alum and lime will be used to treat the water in reactor clarifiers. During periods of high flow in the river when suspended solids concentration is high a polymer will be applied to maintain water quality from the plant. See Appendix B, Figure 5.5.4IX-1 for Water Treatment System Flow Diagram. Equipment for dry feeding lime, alum feed and polymer feed will be provided.

# X. CLOSED COOLING WATER

## 1.0 SYSTEM FUNCTION

The closed cycle cooling water system is designed to circulate cooled condensate through a closed loop system to all major equipment coolers in the main turbine generator area and the boiler area.

## 2.0 SUMMARY DESCRIPTION

There are two 100 percent capacity closed cycle cooling water pumps for each unit. One pump circulates the water through the system during normal plant operation.

A closed cycle cooling water head tank, vented to atmosphere, is included and located at the highest point in the system. The head tank is provided to maintain a reserve volume of treated condensate and to maintain positive pressure on the pump suction piping. A level control valve with a manual bypass admits condensate makeup to replace system leakage.

A chemical treatment tank is connected across the cooling water pumps to introduce chemicals into the suction header when required.

The water passes through the shell side of the two station service heat exchangers for each unit for cooling during normal plant operating conditions. The cooling water through the tubes of these heat exchangers is supplied from the plant circulating water system. A closed condensate bypass around these heat exchangers is controlled automatically to limit the minimum cooling water temperature.

The major components of this system are the closed cycle cooling water pumps, station service water heat exchangers, all station auxiliary coolers, closed cycle cooling water head tank, chemical fill tank, piping, instruments, and controls.

## 3.0 DESIGN CRITERIA

The closed cycle cooling water system is designed for a maximum heat load of $3.69 \times 10^7$ kJ/hr ($35 \times 10^6$ BTU/HR). Cooling water supply for the system will be from the circulating water system. Normal operation will be with one of the two 100 percent capacity closed cycle cooling water pumps. There will be two 50 percent capacity heat exchangers.

# XI. AUXILIARY STEAM SYSTEM

## 1.0 SYSTEM FUNCTIONS

The purpose of the auxiliary steam system is to supply steam for the following systems:

a) Demineralizer

b) Steam Turbine Seals

c) Main Unit Deaerator Pegging

d) Combustion Air Preheating

e) Auxiliary Boiler Deaerator

f) Chemical Cleaning Heating Steam for the Main Boiler

g) Atomizing Steam for the Auxiliary Boiler

## 2.0 SUMMARY DESCRIPTION

The auxiliary steam system for the two 350 MW plants is comprised of the following major components:

a) Auxiliary Boiler

b) Auxiliary Boiler Feed Pumps

c) No. 2 Fuel Oil Supply

d) Auxiliary Boiler Forced Draft Fan

e) Auxiliary Steam Piping

f) Auxiliary Boiler Stack

The auxiliary boiler must be operated to supply steam for the systems listed in 1.0. The auxiliary boiler supplies both turbine seal and deaerator pegging with steam whenever the main turbine is shut down and vacuum is maintained in the condenser. Additionally, the auxiliary boiler provides steam for these systems for short time intervals during start-up and shutdown sequences of the turbine. Combustion air preheating steam is also provided during start-up. Steam for the auxiliary boiler deaerator is supplied whenever the auxiliary boiler is operating.

Steam is fed to the demineralizer raw water heat exchanger to increase the temperature of the raw water to improve efficiency of the demineralizer.

The feedwater for the auxiliary boiler is supplied from the main plant condensate tanks. One 100 percent auxiliary boiler water supply pump will pump the water to the auxiliary boiler deaerator. The deaerator will supply heat and deaerated feedwater to the auxiliary boiler feed pump which will supply feedwater to the boiler.

The auxiliary boiler will be a pressurized furnace water-tube type complete with steam drum and superheater.

A forced draft fan will be utilized to provide combustion air to the boiler wind box and to exhaust the resulting flue gas. The boiler flue gas is then discharged through flue gas ductwork into a steel stack. One of the two 100 percent fuel oil pumps will supply No. 2 fuel oil from the fuel oil storage tank to the auxiliary boiler burners at the required pressure.

See Appendix B, Figure 5.5.4XI-1 for the flow diagram of Auxiliary Steam System.

## 3.0 DESIGN CRITERIA

The materials of construction and design of the auxiliary boiler will meet all requirements of ASME Power Boiler Code, Section 1. The boiler is suitable for outdoor installation without protection of a building structure with the firing aisle enclosed.

Piping for the auxiliary steam system will be seamless carbon steel, A 106, Gr. B. Piping will be of all welded construction in accordance with ANSI B31.1.

Steam capacity of the two boilers is 45.4 tonnes/hr (100,000 lb/hr) at 862 kPa (125 psig) and 195°C (383°F).

# XII. SERVICE AND INSTRUMENT AIR

The Compressed Air System is comprised of the Instrument and the Service Air Systems, each fulfilling the requirements for the plant's compressed air needs.

## 1.0 SYSTEM FUNCTION

### 1.1 INSTRUMENT AIR SYSTEM

The Instrument Air System supplies clean, dry, oil-free compressed air as required to plant pneumatic instrumentation and control.

### 1.2 SERVICE AIR SYSTEM

The Service Air System provides compressed air for all other operations and maintenance services for the power plant and facilities that do not require the instrument air system quality and back-up capability.

## 2.0 SUMMARY DESCRIPTION

### 2.1 INSTRUMENT AIR

The major equipment components of the instrument air system for each unit are as follows:

a. Two (2) non-lubricated, reciprocating type packaged air compressors.

b. Two (2) aftercoolers.

c. Two (2) air receivers, with moisture separator and the necessary condensate removal equipment.

d. Two (2) dual tower, heat reactivated, desiccant type air dryers.

e. Two (2) inlet filters with silencers.

Instrument air is required continuously for operation of the plant on load and for proper operation of auxiliaries during shutdown. The unit will be equipped with two air compressors, either compressor can be selected as a duty unit with the other being in automatic standby. The instrument air compressors are designed to compress free air to a discharge pressure of 760 kPa (110 psi). The aftercooler cools the compressor discharge air and reduces the amount of moisture in the air. The aftercooler utilizes the closed cooling water system as its cooling water source. The discharge of the aftercooler is piped to the air receivers where the instrument air is actively stored. Before the instrument air passes into the ring header, air dryers reduce the moisture in the air to specified levels.

## 2.2 SERVICE AIR

The Service Air System will have the following major equipment for each unit:

a. Two (2) lubricated, reciprocating type packaged air compressors.

b. Two (2) aftercoolers.

c. Two (2) air receivers.

d. Two (2) inlet filters with silencers.

Service Air is necessary for the normal operation of the units. The service air system is a shared system with two compressors piped to one ring header which encompasses the power block and also tees off to supply the service air requirements of the plant general services.

2.3 See Appendix B, Figure XII-1 for the Instrument and Service Air Flow Diagram.

## 3.0 DESIGN CRITERIA

### 3.1 INSTRUMENT AIR

Each instrument air compressor will be sized to provide the entire instrument air requirements for the plant, each compressor is sized for .166 $Nm^3/s$ (350 SCFM) at 760 kPa (110 psi). Each instrument air dryer will be sized to handle the entire air flow from one compressor and provide air at a dew point of -20°C (-4°F) at 760 kPa (110 psi).

### 3.2 SERVICE AIR

Each compressor will be sized to handle the entire plant's service air requirements. Each compressor is sized for .166 $Nm^3/s$ (350 SCFM) @ 760 kPa (110 psi).

# XIII. ASH HANDLING

## A. FLY ASH HANDLING

### 1.0 SYSTEM FUNCTION

The purpose of the Fly Ash Handling System is to automatically unload and convey dry, free-flowing fly ash from the precipitator, economizer and air heater hoppers. The fly ash is either transported dry to a storage silo where it is unloaded into trucks for transport off site or wet to a storage pond on site.

### 2.0 SUMMARY DESCRIPTION

The system shall be of the dry vacuum type. The dry fly ash is fed from the various hoppers into an ash transport piping network. The vacuum shall be induced by a hydraulic exhauster. The vacuum system shall convey the fly ash from the dust collector hoppers to the ash storage silo. The fly ash will be separated at the silo by a cyclone separator and a bag filter. The ash will be discharged into the silo and the remaining air flows to the suction side of the hydraulic exhauster where it is mixed with motive water supplied by one of two full capacity ash water supply pumps. In a secondary operating mode the separator and/or bag filter will be bypassed and ash will be conveyed to the hydraulic exhauster. At the exhauster, the high pressure motive water is mixed with the fly ash conveying air stream and is conveyed to an air separator tank. The air is removed from the slurry at the air separator and vented to the atmosphere from the air separator, the slurry flows by gravity to the ash pond. The ash water supply pumps will recirculate water from the ash pond.

The fly ash vacuum piping shall be arranged with one branch per precipitator field or row of economizer or air heater hoppers. Each branch shall have a spring loaded air intake valve to admit air for transport of the fly ash. Each branch shall have a pneumatically operated conveyor line branch segregating valve.

Each hopper shall be provided with a solenoid controlled penumatically operated fly ash intake valve and a manually operated emergency slide gate valve.

The control system will provide for automatic sequencing of the hopper intake valves.

### 3.0 DESIGN CRITERIA

The system for each unit will be designed to handle a minimum of 122.4 tonnes (135 tons) per hour of dry free flowing fly ash. The system shall be capable of emptying all hoppers in 4 hours of each 8 hour period. The storage silo will have a minimum working capacity of 4535 tonnes (5000 tons). Redundant piping will be supplied between the collection area, precipitator, economizer, and air heaters and the

ash storage silo. A redundant separator and bag filter will be installed on the silo roof.

## B. BOTTOM ASH HANDLING

### 1.0 SYSTEM FUNCTION

The purpose of the Bottom Ash Handling System is to remove ash from the boiler ash hopper and convey it to the bottom ash pond on site.

### 2.0 SUMMARY DESCRIPTION

The bottom ash from the boiler furnace is collected in the furnace bottom ash hopper which includes a furnace seal and discharge gate. A clinker grinder on the discharge of the bottom ash hopper grinds ash to an appropriate size for conveying.

Hydraulic ejectors will be used to provide motive force for fly ash conveying to the ash pond. The motive water will be supplied from one of two bottom ash water booster pumps which will recirculate water from the bottom ash pond.

### 3.0 DESIGN CRITERIA

The bottom ash handling system for each unit will be sized to convey 87 tonnes (96 tons) per hour of bottom ash to the ash pond. The system will be capable of removing eight hours accumulation of ash including start-up time, transfer time from opening to opening, and shutdown time, in approximately 2 to 2 1/2 hours.

## XIV. COMBUSTION AIR, FLUE GAS AND AIR QUALITY CONTROL

### 1.0 SYSTEM FUNCTION

The functions of the Combustion Air, Flue Gas and Air Quality Control system are to: 1) provide air for combustion of boiler fuel plus excess air, 2) remove the flue gas consisting of products of combustion, excess air; and leakage from the furnace, 3) remove ash particles from the flue gas to meet the required air quality regulations discussed in Section 5.4 of this report, and 4) remove sulfur dioxide ($SO_2$) from the flue gas to meet the required air quality regulations discussed in Section 5.4 of this report.

### 2.0 SUMMARY DESCRIPTION

The major components of the system are:

a. FD fans with electric motor drives and controls

b. ID fans with electric motor drives and controls

c. Breechings

d. Electrostatic precipitator consisting of:

   1. Transformer Rectifier sets
   2. Precipitator casing
   3. Collection plate electrodes
   4. Discharge electrodes
   5. Ash collection hoppers
   6. Rapper system
   7. High voltage electrical power supply and controls

e. Wet flue gas desulfurization (FGD) system consisting of:

   1. Limestone delivery, handling and storage equipment
   2. Complete automatic limestone slurry preparation system
   3. Process slurry storage tasks
   4. Absorber modules and reaction tanks including automatic mist eliminator wash system
   5. FGD process piping
   6. Control equipment

Combustion air combined with excess air originates at the Forced Draft Fan. A portion of the combustion air from the primary air fans is used to transport the pulverized coal to the burners.

The flue gases from the air heaters are ducted, through breechings, to the precipitators, where the ash particles (fly ash) entrained in the flue gas are then removed by the precipitators and collected in hoppers for ultimate disposal. The gas with particulate removed is then drawn by the induced draft (ID) fans, discharged through the breeching and the 190 m (624 ft) stack and released to the atmosphere.

A wet limestone scrubber is provided to remove up to 90 percent of the $SO_2$ from 50 percent of the flue gas. With the FGD system in operation, the flue gas from the ID fan enters the scrubber absorber modules where a limestone slurry mist is sprayed into the flue gas stream reacting with the $SO_2$ and forming calcium salts (calcium sulfite and calcium sulfate). The calcium salts, along with the other constituents of FGD sludge are bled from the reaction tank on the bottom of the absorber module, retained in a surge tank and then pumped to an FGD disposal pond. The clean flue gas exits the scrubber in a saturated condition and is mixed with the hot bypassed flue gases before being discharged through a lined chimney.

## 3.0 DESIGN CRITERIA

There are two, half capacity ID fans which will be centrifugal flow, modified radial tip, each with a test block flow to be based on a gas temperature of 175°C (345°F).

There are two half capacity FD fans which will be centrifugal, each with a test block flow to be based on an air temperature of 50°C (122°F).

The precipitator will be a rigid discharge electrode type consisting of four boxes designed to handle a total gas flow equal to ID fan test block with a particulate loading of 13.54 grams/$m^3$ (5.85 grains/acf). The precipitator shall achieve a particulate emission rate of not more than -.0688 Kg/$10^6$kJ (.16 lb/$10^6$ Btu) 100 milligrams/$m^3$ (.044 grains/acf). This is approximately a 99.5 percent efficiency precipitator with the worst coal assuming no beneficiation. The precipitator will have a minimum of six fields including one redundant field.

The FGD system is designed for pressurized operation to remove up to 90 percent of the sulfur dioxide from 50 percent of the flue gas. The 45 percent overall efficiency is a design assumption made on the best information available. The design sulfur dioxide removal shall be accomplished with one module out-of-service.

The reagent preparation system consists of a ball mill wet grinding designed to automatically feed, grind, classify and deliver the limestone reagent of proper fineness to the slurry storage tanks. Two 100 percent limestone day silos and two complete wet ball milling systems are provided to supply the limestone slurry requirements. Each ball mill system will grind 40 tons of limestone per hour; this represents the reagent requirement for the FGD system at full plant load with a coal sulfur content of 5.0 percent as-fired basis. The resulting slurry produced at 30 percent solids content is then pumped and stored in the slurry storage tanks.

The limestone delivery and storage system receives limestone forwarded to the site by truck. The unloading hopper and conveyor used for the coal handling system is also used for limestone. The unloading rate of 1600 TPH will be maintained by reducing dumper hopper feeder rates when limestone is being delivered. A limestone storage conveyor rated at 1600 TPH will be used to stack limestone in an active storage silo with 13,000 ton capacity. This capacity depends on sulfur content of the coal and daily capacity factor and is adequate for 10 days to two weeks storage of limestone for the preparation system. Limestone will be reclaimed from the active storage silo and forwarded to a 1,000 ton day silo adjacent to the preparation area by a series of 12 inch belt conveyors rated at 160 TPH capacity. Limestone will be supplied to the preparation system in 4 two hour long loading cycles per day. This loading operation parallels that of the coal handling reclaim system.

Breeching and precipitator components shall be designed for maximum combination of live load, dead load, wind and internal pressure forces. Maximum internal pressure for design shall be equal to total developed head of the ID fan as a minimum unless boiler implosion analysis indicates a greater value. Ash loading on breeching floor areas shall be a minimum of 880 $kg/m^2$ (180 $lb/ft^2$) to simulate 600mm (2 ft) of compacted ash weighing 1,444 $kg/m^3$ (90 $lb/ft^3$). The same density shall be used for the calculation of ash loads in precipitator hoppers.

# XV. WASTEWATER

## A. SANITARY WASTEWATER TREATMENT

The sanitary wastewater system consists of a package sewage treatment which employs activated sludge process. The plant will treat wastewater due to human occupancy of the power plant and the worker's colony.

### 1.0 SYSTEM FUNCTION

The system treats sanitary wastewaters by biological treatment using the activated sludge process. The chlorinated effluent will be used in the FGD (if used)/fly ash system makeup while the digested sludge will be stored in a sludge tank for subsequent pick up and disposal.

### 2.0 SUMMARY DESCRIPTION

The package activated sludge plant will provide preliminary treatment consisting of:

a. Screening and comminution to grind and remove trash.

b. Aeration of the biomass to oxidize the organics.

c. Settling of the biomass to clarification.

d. Chlorination of the clarified effluent to disinfect and kill pathogens.

e. Sludge digestion to stabilize the settled solids.

f. Sludge lagoon to store the sludge.

### 3.0 DESIGN CRITERIA

The activated sludge biological plant is designed for a population equivalent of 12,500 people with design $BOD_5$ loading of 757 kg/day and design TSS loading of 833 kg/day. The effluent from the system will contain less than 30 mg/l of $BOD_5$ and 30 mg/l of TSS. The effluent will be routed to the FGD pond where it will be used as a source of makeup water. Digested sludge will be stored in an onsite lagoon and can be used for landscaping and gardening for humus value.

The plant will be a prepackaged plant to be installed partially in ground.

A small control building will be required to house the controls and electrical equipment and a laboratory bench to run tests. The plant will be fenced. A lift station will be used to pump the chlorinated effluent to the FGD (if used) fly ash pond.

## B. INDUSTRIAL WASTE DISPOSAL SYSTEM

### 1.0 SYSTEM FUNCTION

The intent of the industrial waste dispoal system is to minimize the waste quantities and dispose of the wastes in an environmentally sound manner.

### 2.0 SUMMARY DESCRIPTION

The wastewater disposal system is designed to treat the various wastes to minimize adverse environmental impact and to minimize the waste discharges. Water reuse is employed wherever practical. Only one stream, chemical cleaning waste, will be treated. The remaining streams are reused, recycled or ponded for evaporation without any treatment. A description of the various streams and their disposition is described below:

a. Cooling Tower Blowdown: Blowdown from the cooling tower is used in the ash handling system. Blowdown is directed to the bottom ash pond.

b. Boiler washes, air heater washes, seal water and ash pit overflows are collected in a sump near the boiler. These wastes are pumped to the bottom ash pond and reused.

c. Demineralizer Regenerant Wastes: Acid and caustic wastes and rinses from the makeup demineralizers are collected in tank where they combine and tend to self neutralize. The wastes are pumped to the miscellaneous waste evaporation pond.

d. Oily Wastes: Floor drains, equipment drains, turbine area sump and yard drains are collected in a pond. Wastes contain oil and suspended solids. These wastes are collected in a sump or tank and are sprayed on coal pile for fire suppression.

e. Makeup Water Pretreatment: Sludge from the water treatment plant is disposed of in the miscellaneous waste evaporation pond.

f. Filter Backwash: Water filtration plant backwash is directed to the bottom ash sluice system for reuse.

g. Coal Pile Runoff: Coal pile runoff is expected to be minimal, if any. Any coal pile runoff will be directed to the miscellaneous waste evaporation pond.

h. Chemical Cleaning Wastes: Chemical cleaning wastes which occur prior to plant startup and infrequently thereafter are directed to a holding tank. The wastes are neutralized and pumped to the miscellaneous waste evaporation pond.

## 3.0 DESIGN CRITERIA

The only waste stream requiring treatment is the chemical cleaning wastes which occurs infrequently. The treatment consists of equalization and neutralization. The waste tank is equipped with an agitator and a recycle pump. The tank is equipped with level switches. A pH controller is provided to pace the acid and caustic pumps which are fed in the pump recirculating line. Acid and caustic day tanks and metering pumps are provided, (to feed the chemical,) and are paced by the pH controller signal. The tank will be lined with corrosion resistant linings to take pH swings of 1-12. Piping, pumps and valves are of corrosion resistant materials.

# XVI. FIRE PROTECTION

## 1.0 SYSTEM FUNCTION

The Fire Protection System provides early detection of fires and warning for plant personnel, and provides manual and automatic means of fighting fires.

## 2.0 SUMMARY DESCRIPTION

2.1 The major components of the plant and yard fire protection systems are:

a. Deluge valves, associated trim piping, fire detectors, control panels and manual stations, and spray nozzles.

b. Alarm check valves for wet systems, fusible sprinkler heads.

c. Standpipe and hose stations and associated manual actuation stations.

d. Halon storage cylinders, associated automatic valves, smoke detectors, discharge nozzles, manual actuation station, and control panels.

e. Yard fire hydrants and associated hose houses.

f. One electric motor driven fire pump.

g. One diesel engine driven fire pump.

h. One jockey pump.

2.2 The in-plant and yard fire protection system provides fire detection, annunciation, and automatic and manual suppression for the various hazards in the plant and yard areas. Deluge systems may be applied to the following hazards:

a. Hydrogen Seal Oil Unit

b. Turbine Oil Reservoir

c. ID and FD Fan Lube Oil Reservoir

d. Oil Filled Main, Start-up and Station Power Transformers

e. Coal Handling Areas

The deluge systems are automatically activated by heat detectors or by manual pull stations. The system is equipped with open sprinklers and upon heat detection or by manual activation, the deluge valve opens

and water flows to the piping system and discharges from all sprinklers. Local and remote alarms activate to annunciate the condition.

Wet sprinkler systems may be applied to the following areas:

a. Diesel Generator Area

b. Cable Spreading Room

c. General Office Areas

d. Assembly/Meeting Rooms

e. Main Fire Pump Room and Diesel Fire Pump Day Tank Area

The wet sprinkler systems are equipped with closed sprinklers and piping filled with water. An alarm check valve monitors flow in the system. If a sprinkler fuses due to fire, water flows and discharges from the open sprinkler head. A local and remote alarm activates upon water flow to annunciate the condition and cause the fire pumps to turn on.

Pre-action sprinkler system may be applied to the following area:

a. Turbine Generator Bearings

b. Boiler Feed Pump

c. Turbine Generator Governor Housing

The pre-action sprinkler systems are equipped with closed sprinkler heads and piping normally filled with air that may or may not be under pressure. A supplemental fire detection system is installed in the same area as the sprinklers. When activated as from a fire, the fire detection system opens the normally closed pre-action valve permitting water to flow into the sprinkler piping system and be discharged from any sprinkler which may be open. Local and remote alarms activate to annunciate the condition.

The main control room and the computer room are equipped with halon extinguishing systems. Halon is a colorless, odorless, electrically non-conductive gas, ideal for fire suppression in clean areas. Halon can be automatically released to the space by signal from smoke detectors located in the room. The Halon gas is stored in pressurized cylinders with extra cylinders to store an additional 100 percent discharge capacity.

Standpipe and hose stations will be located throughout the plant for manual fire fighting use. Yard fire hydrants will be located throughout the yard for manual fire fighting use.

Water to various extinguishing systems is supplied by a 126 l/s 2,000 $\frac{gal}{min}$ electric fire pump. The pump has a 100 percent capacity diesel fire pump backup. The pump draws water from a 3,800 $m^3$ (1,000,000 gallon) overhead water tank serving both units located 30 m (100 feet) above grade.

Pump starting is controlled by automatic or manual means. The electric fire pump would be arranged to start upon decrease of system pressure below a pre-set level beyond that which the jockey pump cannot maintain. The electric fire pump can be manually started if required. The diesel fire pump would be arranged to be the primary pump upon loss of power to the electric fire pump. Method for automatic or manual starting would be similar.

See Appendix B, Figure 5.54XVI-1 for the Fire Protection System Flow Diagram.

## 3.0 DESIGN CRITERIA

Design criteria for the described fire protection systems are based on the requirements of NFPA codes, fire hazards analysis of hazards, and general fire protection practice.

The water tank capacity is based on a pump full flow of 126 l/s (2,000 gallons) for at least 2 hours. The fire pump flow is based on a combined flow rate of ≈ 95 l/s (1,500 gpm) for sprinkler systems and 32 l/s (500 gpm) for hose streams for at least 2 hours.

# XVII. CONTROL BUILDING HVAC

## 1.0 SYSTEM FUNCTION

The functions of the Control Building HVAC system are to provide heating to maintain temperature in the winter and cooling in the summer for proper environment for equipment. Additionally air circulation and ventilation will be continuously provided for human comfort and for slight building pressurization to keep out dust.

Humidity control will be continuously provided in the computer room as required to maintain the proper environment for the computer equipment.

## 2.0 SUMMARY DESCRIPTION

2.1 The major components of the Control Building HVAC system for each unit are:

a. Two air cooled package chillers each with centrifugal refrigerant compressors, condenser coils, condenser fans, motor starters, shell and tube evaporator, and capacity controls

b. Two centrifugal chilled water pumps

c. Two single zone draw-through air conditioners for the control room tagged ACU-3 and ACU-4

d. Three single zone draw through air conditioners, one serves the Cable Spreading and Electronic Relay Rooms (tagged ACU-2), one serves the Results Center, Electronic Repair Shop, Shift Supervisor's Office, Conference, and Lunch Rooms (tagged ACU-5), and one serves the office, tool, and storage rooms at grade (tagged ACU-1)

e. Two air conditioners for the computer room

f. One single zone draw-through air handler for the machine shop

g. One package through-wall air conditioner for the machine shop office with refrigeration circuit, evaporator coil, condenser coil, electric heating element, filter, and a complete control system

h. Miscellaneous exhaust fans

i. Piping and ductwork

j. Temperature control system

2.2 The chillers will operate continuously on a lead-lag basis with spare capacity. One chilled water pump operates continuously with the other serving as standby. This equipment provides chilled water on demand at each air conditioner.

One Control Room air conditioner, ACU-3 or ACU-4, operates continuously with the other serving as standby. The operating air conditioner continuously circulates and filters room air and provides a slight amount of outdoor air for ventilation and building pressurization. The air conditioner also heats or cools the circulated air as required to maintain proper space temperatures.

ACU-5 operates continuously as described in air conditioner above with the addition of zone control. Space temperature is controlled in each room by supplying air to each room through a variable volume bypass type control box.

One computer room air conditioner operates continuously, with the other serving as standby as described above for the control room with the addition of humidity control.

The machine shop air handler operates continuously supplying and filtering 100 percent outdoor air to the shop to provide ventilation and air movement. The air handler heats the supply air as required to maintain minimum space temperatures. During the summer, the air handler also cools the supply air by exchanging sensible heat with latent heat by evaporating potable water.

The machine shop office air conditioner cycles to provide heating or cooling as required to maintain proper space temperatures.

Exhaust fans run continuously or intermittently as service requires for proper ventilation.

## 3.0 DESIGN CRITERIA

The following specific design criteria are used to engineer the Control Building HVAC system:

a. Weather data for Lahore, Pakistan:

1.6°C (35°F), Winter
42.8°C (109°F) DB/28.3°C (83°F) WB, Summer

b. Air conditioned space temperatures:

22.2°C (72°F), Winter
25.6°C (78°F) DB/50 Percent RH, Summer

c. Machine Shop space temperatures:

20°C (68°F), Winter
35°C (95°F), Summer

d. Chilled water conditions at design:

5.6°C (42°F), Supply Water
10°C (50°F), Return

e. Each chiller is sized to provide 75 percent of total building cooling requirement.

f. Each chilled water pump is sized to circulate 100 percent to total system requirement.

g. Each control room air conditioner is sized to provide 100 percent of total room HVAC requirement.

## XVIII. CYCLE MAKEUP TREATMENT SYSTEM

### 1.0 SYSTEM FUNCTION

The makeup demineralizer system treats pretreated makeup water to a quality suitable for boiler feedwater.

The treatment consists of air exchange to remove cations and ions for producing water suitable for the boilers closed cycle cooling water system.

### 2.0 SUMMARY DESCRIPTION

Pretreated water is supplied to the demineralizer system from a storage tank or directly from the filtered water header. The system consists of two trains of 100 percent capacity with a common degasifier. Demineralized water is stored in a tank from where it is fed into the hotwell or to the closed cycle cooling water loop. Major components of the system for the two 350 MW units are:

a. 2 weak cation resin ion exchange columns.

b. 2 strong cation resin ion exchange columns.

c. 2 weak anion resin ion exchange columns.

d. 2 mixed bed demineralizers.

e. 1 degasifier.

f. 2 degasifier forwarding pumps.

g. 2 vacumm pumps.

h. 1 demineralized water storage tank.

i. 2 sulfuric acid day tanks.

j. 2 caustic soda day tanks.

k. 1 hot water tank.

The system will be semi-automatic. Regeneration cycle will be initiated manually with all subsequent regenerative steps taking place automatically until the demineralizer train is regenerated and returned to standby status.

## 3.0 DESIGN CRITERIA

The cycle demineralizer can treat 37.8 l/s (600 gpm) of filtered water per train. The common vacuum degasifier has the capacity to meet the system requirements when both trains are in operation.

Inlet water to the demineralizers will generally be of the following quality:

| | | |
|---|---|---|
| Temp | 18-28°C (64-82°F) | |
| pH | 8-9 | |
| Alkalinity as $CaCO_3$ | 66 | mg/l |
| Hardness as $CaCO_3$ | 82 | mg/l |
| Silica | 5 | mg/l |
| Sulphate | 100 | mg/l |
| Chloride | 55 | mg/l |
| Suspended Solids | 1 to 5 | mg/l |
| Iron | <1 | mg/l |

The demineralizer system is designed to produce an effluent from the mixed bed demineralizer of the following quality:

| | | | |
|---|---|---|---|
| a. | Conductivity µmhos | 0.5 | |
| b. | pH | | 6.0 to 8.0 |
| c. | Silica, as $SiO_2$ | mg/l | 0.02 |
| d. | Oxygen at 7.2°C (45°F) as $O_2$ | mg/l | 0.1 |

The effluent from each train will be monitored for conductivity and silica continuously.

# XIX. PLANT COAL HANDLING DUST CONTROL

## 1.0 SYSTEM FUNCTION

The function of the plant coal handling dust control system is to contain fugitive dust where it is generated with skirted belt and feeder covers, hoods, and sealed chutes and bins. Additionally the system captures dust particles suspended in the air by controlling and directing air drafts under belt covers and hoods and provides for the transport of dust-laden air through ducts to baghouses for dust collection processing.

## 2.0 SUMMARY DESCRIPTION

The major components of the plant coal handling dust control system are:

a. Hoods and ductwork,

b. Baghouses with dust hoppers and induced draft fans,

c. Rotary feeders, screw conveyors, and dust chutes,

d. Other dry dust conveying equipment which may include pneumatic conveying piping, blowers, tanks, and filter receivers,

e. Dust processing equipment which may include dry dust storage bins, metering feed screws, dust agglomerators, and wet dust conveyor belts,

f. Local and centralized control equipment.

Airborne dust is generated at crushers and wherever coal is agitated, such as at unloaders and belt transfer points. Fugitive dust is contained in these areas by enclosures and belt covers which are strategically connected to the dust collection ductwork. Induced draft fans create negative pressure within the enclosures and covers to control and contain the dust. The fans also draw suspended dust particles into dust collection air ductwork which transports it to baghouses for separation.

Baghouses filter the dust-laden air through filter bags. The bags are periodically cleaned with pulses of compressed air directed to the clean side of the bags causing the dust to fall into the baghouse hoppers. Dust is transported out of the hoppers through rotary air lock feeders and back to the plant coal handling system through a sealed system of screw conveyors and chutes. Where dust must be lifted or transported over long or winding horizontal distances, the conveying system may be pneumatic. Where dry dust returns may cause significant increased fugitive dust emissions downstream along the plant coal handling system, the dust may be processed through a horizontal agglomerator first. The agglomerator causes the dust particles

to join together in clusters by spraying water and mixing the dust and water with paddles rotating on a horizontal shaft.

## 3.0 DESIGN CRITERIA

The following specific design criteria are used to engineer the plant coal handling dust control system:

a. Transport velocity for dust collection ductwork is a minimum of 19 m/s (62 fps).

b. Dust collection air flow rate for conveyor belt transfer points not exceeding drop heights of 2.4 meters (8 feet) is 235 l/sec (500 CFM) per foot of belt width.

c. Dust collection air flow rates for conveyor belt transfer points exceeding drop heights of 2.4 meters (8 feet), and for unloaders and reclaimers are determined individually.

d. Dust collection air flow rates for bunkers is a minimum of 71 l/s (150 CFM) per foot of bunker length.

e. Baghouse sizing is based on 5:1 air:cloth ratio .025 m/s (5 fpm average air velocity through bags).

f. Coal dust agglomeration is used to process dust only from baghouses controlling yard and crusher house fugitive dust especially when dust is returned to belt conveyors transporting coal to the plant.

# XX. COAL HANDLING

## 1.0 SYSTEM FUNCTION

The basic function of the on-site coal handling system is to provide means for unloading, storing, reclaiming and forwarding coal to the in-plant coal silos. Components of this system are also supplied to accurately weigh and sample the coal being delivered to the plant. The delivery of coal to the plant is assumed to be either unit train delivery directly from the Lakhra coal mine or by overland conveyor for the mine mouth site location. Six trains per day of 70 cars each will supply approximately 16,800 tonnes (20,000 tons) of coal daily.

## 2.0 SUMMARY DESCRIPTION

### Unloading

Coal will be unloaded from the assumed 40 tonnes (44 tons) capacity bottom dump hopper cars. Trains will be spotted such that three cars may be dumped simultaneously into a quadriplex hopper of 218 tonnes (240 tons) capacity. Indexing for the car spotting operation will be at approximately five minute intervals such that a full train may be unloaded in two-to-three hours. Coal will be transferred for on-site storage via four 363 tonnes (400 tons) per hour flat belt feeders feeding an unloading belt conveyor of 1,450 tonnes (1,600 tons) per hour capacity.

### On-Site Storage

Coal will be stored on-site in either one of four 13,650 tonnes (15,000 tons) active storage silos or the compacted and sealed dead storage pile. Dead storage of 255,000 tonnes (280,000 tons) for approximately two weeks of fuel at full unit load will be maintained for emergency supply only. This coal will be sealed on the surface to minimize the chance for spontaneous combustion. Stackout of coal to this pile will be via a 1,450 tonne (1,600 tons) per hour fixed stacking conveyor with telescopic chute.

Normal active coal storage for the plant fueling will be in the active storage silos. These silos will be approximately 21.3 meters (70 feet) in diameter and 58 meters (190 feet) total height and are constructed from reinforced concrete. Active storage silos are provided to maintain a controlled first-in/first-out plant inventory to avoid retaining uncompacted lignite for long periods of time. These silos will

also contain the coal within an area which will minimize the potential for coal fires and fugitive dust problems. Coal will be distributed to the active storage silos via a 1,450 tonne (1,600 tons) per hour tripper belt conveyor.

Reclaim

Coal from the active storage silos will be reclaimed and forwarded to the plant via one of two 725 tonne (800 tons) per hour conveyors. These conveyors are supplied by flat belt feeders at the base of the silos. There will be four feeders per silo and each feeder can feed either of the reclaim belts.

Reclaim from the dead storage pile will be by bulldozers pushing material to an underground reclaim hopper. A single 725 tonne (800 tons) per hour emergency reclaim feeder and 725 tonne (800 tons) per hour emergency reclaim belt will supply material to the crusher house surge hopper.

Coal from either active or dead storage is sent to the crusher house where it is reduced to 38 mm (1 1/2") maximum size in one of two 363 tonne (400 tons) per hour ring type crushers before being forwarded to the plant silos. Transfer of material to the plant silos is via one of two 725 tonne (800 tons) per hour plant supply belts. Final transfer to the in-plant bunkers is via a 725 tonne (800 tons) per hour tripper conveyor. The tripper conveyor has five unloading points, one for each of the in-plant silos. An in-plant surge hopper is provided which is sized and detailed to allow the addition of future conveyors which will be installed to forward coal from the initial unit to future units.

Sampling

Two sampling systems are provided for the on-site coal handling system. The first is a two stage "as-received system" which will sample coal delivered to the plant prior to stack-out. This system is located in the transfer house.

An "As-Fired" sampling system is located in the boiler house to sample coal prior to delivery to the in-plant coal silos.

Magnetic Separators

Electric magnetic separators are provided at the head end of the unloading conveyor and emergency reclaim conveyor to remove tramp magnetic material from coal before it is loaded into the system.

### Weigh Scales

Electronic belt weigh scales are provided on the unloading conveyor to weigh and record the material received at the plant. Weight scales are also provided on the two plant supply conveyors to record the weight of coal delivered to the in-plant silos.

## 3.0 DESIGN CRITERIA

For purposes of this System Description and the Coal Handling Specifications, design criteria, standards, codes, regulations, etc., are based on United States Standards.

### General Design Criteria

System design shall incorporate all features to minimize lignite degradation such as use of active storage silos, belt vs. vibratory feeders, minimum transfer points and minimum free fall/impact areas. A coal pile management program shall be a part of normal plant operational procedures to ensure adequate storage and handling precautions.

Belt conveyors and belt feeders shall be furnished with electronic silicon controlled rectifiers (SCR) type soft starting equipment and be capable of starting under full load.

Inclined belt conveyors shall be equipped with head shaft mounted backstops, in case of power failure or emergency shutdown, to prevent reversal of the conveyors.

All belt conveyors shall be centrally loaded and of moderate speed. Conveyor sizes and speeds are shown in Appendix B, Figure 5.5.4-1.

All belt conveyors shall be covered with hinged corrugated steel hoods, accessible from both sides of the conveyor.

Personnel shall be thoroughly trained in safety, operational and maintenance procedures. Lignite and lignite dust shall be treated as potentially hazardous materials.

All drawings, documentations, etc., are to use both metric and English measurements.

All conveyors and feeder belting installation shall be accomplished by written procedure only.

Underground structures and tunnels shall be designed to prevent concentrations of gases and dust.

Civil

Reclaim hoppers/tunnels, bent foundations, transfer and crusher house foundations will be of reinforced concrete construction and built in open excavations on controlled compacted soil.

Site railroad trackage, in the coal handling area, shall allow for storage of disabled hopper cars and minimum switching arrangement.

Structural

The emergency reclaim hopper shall be designed to support loads imposed by a coal pile directly on top of the hopper and support a D9 tracked bulldozer with coal blade plus 75 percent impact loading.

The transfer and crusher houses shall consist of braced steel frames to support machinery, conveyor gallery loads and hoist beams for equipment removal. Stairways and towers will be provided for access to all areas.

Architectural

The transfer and crusher houses shall be roofed and sided with uninsulated metal panels. Control rooms shall be fully enclosed.

Controls

Controls will be designed to maximize equipment use in various operating modes. Emergency system shutdown, startup warning horns and maintenance controls shall be provided.

Weigh scale recording and reading will be provided in local control rooms.

Emergency pull cord switches directly open motor starters when initiated and must manually be reset.

Electrical

Motors will be totally enclosed/dust ignition proof type with a 1.15 service factor.

Lighting for the Coal Handling system will be provided with an approximate level at 10 foot-candles.

# XXI. ELECTRICAL POWER SUPPLY

## 1.0 SYSTEM FUNCTION

The electrical power supply is designed to provide a safe and reliable system for the generation, control and switching of the power from the generator. In addition a source of start-up and operating power for the plant auxiliary equipment is provided.

The major components of the electrical power system are power transformers which include a generator step-up transformer, a start-up transformer and an auxiliary transformer, isolated phase bus, switchgear, load centers and motor control centers. See Appendix B, Figure 5.5.4XXI-1 for the Generator and Station Power One-Line Diagram.

## 2.0 SUMMARY DESCRIPTION

The start-up power or "black start" power for starting and operating the station equipment before generation is available is obtained from the 500 kV transmission system. This power enters the substation and is connected to the start-up transformer to reduce the voltage to 6900 volts. During normal operation when the generator is functioning the operating or auxiliary power is obtained from the output of the generator. An auxiliary power transformer reduces the generated voltage to 6900 volts.

A raceway system is designed to distribute the power, control and instrumentation cables. The design includes cable tray, conduit and buried duct for routing the interconnecting cable systems.

## 3.0 DESIGN CRITERIA

The guaranteed generator MVA rating (at specified power factor and hydrogen pressure) will be selected to correspond to the maximum expected megawatt output of the turbine at valves wide open, specified steam temperature and specified condenser vacuum. The generator rotor and stator iron will be hydrogen cooled and the stator windings will be cooled with deionized water or hydrogen.

The isolated phase bus will have a rated voltage satisfactory for the generator maximum design operating voltage, and a 110 kV BIL for generator ratings up to 24 kV. The section between the generator and main step-up transformer will be rated to

continuously carry rated generator MVA at 95 percent of rated generator voltage, without exceeding a 55°C conductor temperature rise for a maximum 50°C ambient temperature. The exact self-cooled rating will be determined by the manufacturer based on an economic study considering capital cost and energy loss evaluation factors in effect at time of bidding.

The generator step-up transformer will consist of three single phase units with a fourth as a spare stored onsite. The transformers are sized as 3-145/162.4 MVA FOA, 45°C/55°C.

Two unit auxiliary transformers will be OA/FA type, sized to operate close to the 45°C OA rating when the turbine is delivering its guaranteed output. The FA and 55°C ratings provide reserve capacity for emergency overload conditions. The two transformers are sized at 24/32/35.85 MVA OA/FA, 45°C/55°C

One OA/FA/FA, 45/55°C startup transformer will be provided to start the units. This transformer will consist of three single phase units with a fourth as a spare stored onsite. The startup transformer will be sized to start the unit. The FA cooling and 55°C rating will provide reserve capacity to meet the peak emergency load imposed when one of the unit auxiliary transformers is out of service. The transformer is sized at 3-16/21.3/26.7/29.9 MVA, OA/FA/FA 45°C/55°C.

Auxiliary and startup transformer low voltage windings will be wye connected and low resistance grounded to limit ground fault current and its associated equipment damage, while still allowing selective protective relay operation.

The medium voltage switchgear will be metal-clad, dead front drawout construction, with each breaker cubicle isolated from the adjacent cubicle by a metal barrier. The interrupting ratings will be selected in accordance with ANSI Standard C37.20 making full allowances for asymmetrical/symmetrical current ratios. Incoming breaker and internal bus continuous current ratings will be chosen to be greater than the maximum expected loading. The circuit breakers will have stored-energy, mechanical-spring operating mechanisms designed for operation on a 125 volt dc power source. The switchgear will be designed for remote control, remote indication, and remote alarm, in addition to having complete local test facilities.

Motors 200 HP and larger will be powered from the 6900 volt medium voltage switchgear. Motors less than 200 HP will be powered from the 400 volt motor control centers.

The unit and station auxiliaries will be supplied electric power from double ended, secondary selective unit substations. Where possible, the unit substation primary feeders will be arranged so that each end of the unit substation is fed from a separate primary bus. The systems will be 4-wire, wye connected, and solidly grounded at the transformer neutral. The unit substations will be located close to the areas of load concentration in order to minimize power and control wiring, and provide good voltage regulation. Transformers will be loaded such that their self-cooled rating is not exceeded by the maximum total demand. Cooling fans will be provided to allow for future load growth and permit temporary overloading when one of the primary feeders is lost.

Motor control centers (MCC's) will be located throughout the plant in areas of concentrated 400 volt loads. Indoor MCC's will have NEMA Type 1 enclosures with gaskets on doors and filler plates. Locations will be chosen with care to avoid damp, dirty, or hot areas and to allow adequate front access.

Motor control centers will utilize standard modules factory assembled in suitable shipping lengths. They will include front mounted starters and auxiliary control relays.

# XXII. EMERGENCY POWER SUPPLY

## 1.0 SYSTEM FUNCTION

The station electrical power system is designed to provide reliable electrical power through both primary and alternate sources for the auxiliary equipment. This power is available with minimum interruption and during unit shutdown. An emergency power system including a vital 400 volt ac bus, an uninterruptible 220 volt ac bus and a 125 volt dc system are necessary to provide further backup for essential equipment and controls which must be maintained for safe and reliable plant operation and shutdown.

The vital 400 volt bus is backed up by an emergency diesel generator. Equipment connected to this vital 400 volt bus will be selected based on recommendations made by the boiler and turbine manufacturers.

Essential loads are divided into the following categories:

1. Essential for safe unit shutdown.
2. Essential for continued unit operation.
3. Required for rapid re-start.
4. Essential plant services.
5. Essential for safety and protection.

The emergency power system includes a 125 volts dc system and a 220 volt ac system. Both of these systems are designed to provide uninterruptible power for essential equipment and controls. The 125 volt dc system includes a 125 volt battery and the associated charger, controls and distribution panels. The 220 volt ac system includes an inverter, automatic and manual transfer switches and the related controls and distribution panels.

## 2.0 SUMMARY DESCRIPTION

The 220 volt ac system will receive its normal power from an inverter connected to the 125 volt dc system. An emergency diesel generator connected to the 400 volt ac vital bus provides a second back-up to the 220 volt ac system through an automatic transfer switch and a transformer.

The 125 volt dc system receives power from a battery and charger. The charger is powered from the 400 volt ac vital bus.

The diesel control scheme is designed to automatically start the diesel engine on loss of the vital MCC bus voltage, and to sequentially transfer the MCC supply from the normal source to the emergency generator. The control scheme will include provision for routine generator set exercising and maintenance, without interruption of supply to essential loads. See Appendix B, Figure 5.5.4XXII-1 for the emergency power system one line diagram.

## 3.0 DESIGN CRITERIA

The Diesel engine generator will be conservatively sized for continuous load and motor starting conditions. A fast acting, solid state voltage regulator will be used to help overcome motor starting voltage dip and synchronizing controls will be provided to permit exercising the set.

The fuel will be high speed diesel oil from the station fuel oil tank. A day tank will be provided inside the engine room to allow at least two hours operation at maximum continuous rating. The engine will have dual, redundant 24 volt dc starting systems, each complete with its own battery, charger, and starting motor. The starting battery capacity will be sufficient to crank the engine for a minimum of six consecutive, unsuccessful starts. The engine will include water jacket and lube oil heaters to aid fast starting and loading.

The inverters and automatic transfer switches will be solid state and the maintenance bypass switches will be designed and constructed to allow safe maintenance of vital system components without power interruption. In order to minimize spare parts inventory, the vital system will be designed to use as many interchangeable parts as possible.

The dc system will include a lead acid battery, solid state rectifier/battery chargers, and main dc distribution panels.

The battery capacity will be adequate to supply all associated loads for the required sequence, duration, and combinations that occur when the unit must be shut down with no other power sources available. The following minimum load durations will be used:

| | |
|---|---|
| dc emergency lube oil pumps | 1 hour |

| | |
|---|---|
| DC emergency hydrogen seal oil pump | 1 hour |
| switchgear operation | 4 hours |
| inverter | 4 hours |
| indication lights & auxiliary relays | 5 hours |
| annunciators and recorders | 5 hours |

The battery charger will be sized to supply those dc loads that exist continuously during normal unit operation, while simultaneously recharging a fully discharged battery. The maximum battery recharge period will be 12 hours.

# XXIII. INSTRUMENTATION AND CONTROL SYSTEM

## 1.0 SYSTEM FUNCTION

The Instrumentation and Control System is designed to provide the plant operators with sufficient information, in a central location, to monitor and operate all power plant functions. In addition to fully automatic control, the system allows a manual means to remotely position all final control elements during unit startup, shutdown, or emergency conditions.

## 2.0 SUMMARY DESCRIPTION

The major components of the Instrumentation and Control system are the plant control and data acquisition system, the water quality analysis system, the training simulator, and the main control panels.

## 2.1 PLANT CONTROL AND DATA ACQUISITION SYSTEM

The Plant Control and Data Acquisition System is an integrated system in which the plant control functions are integrated with the supervisory computer functions in a common system.

A microprocessor based system is utilized for the control and data acquisition system. The system may be either a fully partitioned or redundant processor configuration. The system is connected together with a data highway which allows information to be available to the CRT display console in the unit control room.

The CRT and its associated console consist of an electronic driver unit, keyboard, disc drive units, and printer. The CRT is used by the plant operators to display plant operation information in graphic, trending, or text format and also used by plant technicians for troubleshooting and configuration tasks.

Control functions, interlocks, and computing functions such as boiler efficiency calculations, are carried out in the logic cabinets associated with each unit.

Connections to field mounted equipment such as transmitters and control valves are made by dedicated wiring. Non-essential inputs used for monitoring only are assigned to a "wire-replacement" multiplexer. An example of multiplexed signals are boiler superheater, tube, reheater tube, and drum metal thermocouples.

The Plant Control and Data Acquisition System encompasses generally all plant areas except the turbine-generator and its auxiliaries such as hydrogen seal oil, and lubricating oil systems. The turbine-generator controls also provide startup, synchronizing, on-line monitoring, and safety interlock functions.

Systems covered by the Plant Control and Data Acquisition System include the following:

a. Boiler combustion, feedwater, and steam temperature

b. Feedwater, including feed pumps and heaters.

c. Condensate, including condensate pumps, heaters, and hot well.

d. Circulating water, including traveling screens and pumps.

e. Air systems, both control and service.

f. Boiler auxiliaries, including mills, ignition fuels and mechanical draft fans.

The control system is designed for fully automatic operation. However, each final control element is provided with a manual/automatic selector station to allow direct control by the plant operator. Group control is allowed from master manual/automatic stations such as the mill master and air flow master.

The boiler and turbine control systems are provided with three modes of master demand signal generation; boiler following, turbine following, and coordinated control. In boiler following, the boiler responds to changes in the steam rate (steam flow and pressure) while the turbine is loaded from demands in generation requirements. In turbine following, the boiler load is established and the turbine changes the electrical generation to maintain steam conditions. In the coordinated control mode, the boiler and turbine loading is matched by the control system. In both the boiler following and coordinated control modes, the demand for electrical generation may be set remotely by the Energy Control Dispatcher.

## 2.2 WATER QUALITY ANALYSIS SYSTEMS

Continuous and automatic sampling of the feedwater and steam is provided at the following locations:

1. Boiler blowdown: pH, Conductivity (2), silica

2. Saturated steam: sodium, silica

3. Economizer inlet: pH, hydrazine

The analysis system is complete with all necessary sampling probes, valves, coolers, pressure reducers, conductivity cells, analyzers, signal converters, and amplifiers.

Sample coolers are mounted near the sample point with necessary cooling water, drains, manual sampling connections, and temperature indicators.

All analysis equipment is housed in the laboratory area of the plant control building.

Facilities are provided to allow cooled samples to be taken from the following locations:

1. Economizer inlet

2. Reheater inlet

3. Reheater outlet

4. Superheater outlet

5. Water wall headers (1 per header)

6. Steam drum (3 points)

7. Desuperheater outlet(s)

## 2.3 TRAINING SIMULATOR

A training simulator is provided to carry out operator training functions. This includes a mockup of an identical boiler-turbine-generator control panel and a boiler simulator to allow realistic hands-on experience. The system allows the instructor to introduce various operating conditions and review the trainees response.

## 2.4 MAIN CONTROL PANELS

The unit is provided with a boiler-turbine-generator control panel which contains the operator interface control and instrumentation equipment. Devices located on the panel include recorders, indicators, annunciators, control switches, indicating lights, and manual/automatic selector stations. The control room is also provided with an auxiliary panel for balance of plant systems.

## 3.0 DESIGN CRITERIA

Reliability is of primary consideration in the specification and design of the control system. Critical control transmitters are redundant with deviation monitoring circuits. Each control loop is reviewed and a failure mode assessed to protect personnel and equipment. A means of positioning final control elements with the loop controller out of service is included as a backup.

All logic voltage levels utilized in the control system are redundant with diode auctioneering to allow uninterrupted transfer in the event of a power supply failure. Dual and independent power sources feed the system logic cabinets for redundancy.