PN-ABE-224

Best available copy -- pages 10 & 11 missing

PN-ABE-224

14566

Working Paper No.

Working Papers are made available in limited numbers for comment and discussion and to inform interested colleagues about work in progress at the International Council for Research in Agroforestry. Comments and suggestions are invited, and they should be directed to the author(s).

ICRAF

INTERNATIONAL COUNCIL FOR RESEARCH IN AGROFORESTRY
CONSEIL INTERNATIONAL POUR LA RECHERCHE EN AGROFORESTERIE
CONSEJO INTERNACIONAL PARA INVESTIGACION EN AGROSILVICULTURA

P.O. Box 30677, Nairobi, Kenya, Tel: 29867. Telex: 22048 Cable: ICRAF

ICRAF WORKING PAPER NO

43

THE POTENTIAL OF AGROFORESTRY FOR SOIL CONSERVATION
PART II. MAINTENANCE OF FERTILITY

Anthony Young

November 1987

CONTENTS

		Page
PREFACE		iv
ACKNOWLEDGEMENTS		iv
ABSTRACT		1
SUMMARY		2
1	INTRODUCTION	8
1.1	Objectives	8
1.2	Previous reviews	8
1.3	Arrangement of the text	9
1.4	Climatic zones and soil types	9
2	SOIL FERTILITY AND AGROFORESTRY	11
2.1	Soil fertility, erosion control and sustainability	11
2.2	Land productivity and soil fertility	11
2.3	Problems of soil degradation and low soil fertility	13
	2.3.1 Decline in soil fertility	13
	2.3.2 Low soil fertility	14
	2.3.3 Diagnosis of soil fertility problems in planning for agroforestry	16
2.4	Management options for maintaining soil fertility	16
	2.4.1 Practices other than agroforestry	16
	2.4.2 Agroforestry as a practical management option	21
2.5	The range of agroforestry practices	25
3	EFFECTS OF TREES ON SOILS	27
3.1	How we know that trees improve soils	27
3.2	Tree-soil transects	27
3.3	Processes by which trees improve soils	30
3.4	Adverse effects	35
4	SOIL ORGANIC MATTER	36
4.1	Organic matter and soil fertility	36
4.2	The nature of soil organic matter	38
	4.2.1 General	38
	4.2.2 Fractions of organic matter	38
	4.2.3 Implications for agroforestry: specialized research	43
	4.2.4 A working hypothesis for soil monitoring in general agroforestry research	45
4.3	The organic matter cycle	46
	4.3.1 Introduction	46
	4.3.2 The cycle under natural vegetation	46
	4.3.3 The cycle under agriculture: continuous cropping	49
	4.3.4 The cycle under a spatial agroforestry system	52

		Page
4.4	Trees as producers of biomass	54
	4.4.1 Natural vegetation	54
	4.4.2 Biomass production by trees used in agroforestry	56
4.5	Plant residue requirements to maintain soil organic matter	58
4.6	Litter quality and decomposition	60
5	PLANT NUTRIENTS	62
5.1	Nitrogen	62
	5.1.1 The nitrogen cycle	62
	5.1.2 Nitrogen fixation by trees and shrubs	65
	5.1.3 Nitrogen cycling in agroforestry systems	67
5.2	Other nutrients	70
	5.2.1 General	70
	5.2.2 Nutrient cycling in agroforestry	73
6	OTHER SOIL PROPERTIES	77
6.1	Soil physical properties	77
6.2	Acidity	78
6.3	Erosion control and soil fertility	81
7	THE ROLE OF ROOTS	83
7.1	Root biomass, turnover and nutrient content	83
7.2	Mycorrhizae	84
7.3	Roots and soil fertility under agroforestry	84
8	TREES AND SHRUBS FOR SOIL IMPROVEMENT	88
8.1	General	88
8.2	Trees and shrubs	88
8.3	What makes a good soil-improving tree?	98
9	SOIL CHANGES UNDER AGROFORESTRY SYSTEMS	100
9.1	General	100
9.2	Soil fertility aspects of indigenous agroforestry systems	100
9.3	Soil fertility under agroforestry practices	103
	9.3.1 Rotational practices	103
	9.3.2 Spatial mixed practices	107
	9.3.3 Spatial zoned practices	111
	9.3.4 Sylvopastoral practices	117
	9.3.5 Practices with tree component predominant	118
	9.3.6 Other practices	119
9.4	Summary: effects of agroforestry practices on soil fertility	119
9.5	Design, management and integration	120
10	RESEARCH INTO THE SOIL CONSERVATION POTENTIAL OF AGROFORESTRY	122
10.1	Conclusion: the potential	122
10.2	The need for research	123
10.3	Specialized soil research	123
10.4	Soil observations in general agroforestry research	124
REFERENCES		125

LIST OF TABLES

		Page
Table 1	Sustainability and soil conservation.	12
Table 2	Management practices for maintenance of fertility, with constraints to their application.	17
Table 3	Rest period requirements of tropical soils.	19
Table 4	Agroforestry practices.	26
Table 5	Processes by which trees maintain or improve soils.	31
Table 6	Adverse effects of trees on soils.	32
Table 7	Effects of organic matter on soil fertility.	37
Table 8	Estimates of the litter-to-humus conversion loss and the humus decomposition constant.	40
Table 9	Fractions of plant litter and soil organic matter.	44
Table 10	Values in the carbon cycle under natural vegetation.	47
Table 11	Estimates of the carbon cycle under cereal crops.	50
Table 12	Biomass production of natural vegetation.	55
Table 13	Biomass production of trees used in agroforestry.	57
Table 14	Indicative plant biomass requirements for maintenance of soil organic matter.	59
Table 15	Nitrogen fixation by trees and shrubs.	66
Table 16	Nitrogen in litter fall and prunings.	68
Table 17	Nutrient content of trees used in agroforestry.	74
Table 18	Effect of hedgerows on root weight of intercropped maize.	79
Table 19	Leaf and root biomass on nine land use systems.	86
Table 20	Trees and shrubs for soil improvement.	89
Table 21	Soil nutrient content beneath *Prosopis* spp..	97
Table 22	Soil aspects noted in descriptions in the ICRAF agroforestry systems inventory.	101
Table 23	Soil studies of plantation crop combinations.	109
Table 24	Soil studies of hedgerow intercropping.	112
Table 25	Soil changes under hedgerow intercropping, Ibadan, Nigeria.	115

LIST OF FIGURES

Figure 1	Chains of cause and effect linked to decline in soil fertility.	15
Figure 2	Tree/crop displacement, yield, production and value.	23
Figure 3	Tree-soil transects.	29
Figure 4	Decay curves for loss of carbon-14 labelled plant residues added to soil.	42
Figure 5	The carbon cycle under natural vegetation.	48
Figure 6	The carbon cycle under a cereal crop.	51
Figure 7	Changes in soil carbon under agroforestry.	53
Figure 8	The nitrogen cycle in agroforestry.	63
Figure 9	The nitrogen cycle under a coffee-*Erythrina*-*Inga* system.	69
Figure 10	The nutrient cycle in agroforestry for nutrients other than nitrogen.	71
Figure 11	The phosphorus cycle under rain forest.	75
Figure 12	Modelled soil carbon changes under rotational and spatial systems with equal tree-crop ratios.	106

PREFACE

The present text of this review, as three working papers, is intended as a draft version prior to publication as a book. For soil fertility aspects, the quality of relevant material has been so great as to be almost overwhelming, and had an attempt been made at complete coverage of recent publications, the review would never have been completed. Work of significance has no doubt been omitted. Readers are earnestly invited to comment on matters of fact, interpretation or emphasis, and to give details of relevant publications, reports and work in progress.

Anthony Young
Nairobi, November 1987

ACKNOWLEDGEMENTS

The study on which this publication is based was supported by a grant from the Swedish International Development Agency. The previous review of soil productivity aspects of agroforestry by Nair (1984) was of considerable help in preparing the present text. I should like to thank colleagues in ICRAF for much helpful advice, my wife, Doreen, for proof-reading, and Jane Waweru for her skill, care and patience in preparing the typescript, tables and figures.

THE POTENTIAL OF AGROFORESTRY FOR SOIL CONSERVATION

PART II. MAINTENANCE OF FERTILITY

ABSTRACT

Soil erosion in its broader sense covers erosion control, the maintenance of soil fertility, and thus sustainable land use. This Working Paper, which forms Part II of the review as a whole, covers agroforestry in maintenance of fertility. Relations between fertility, soil degradation and sustainability are discussed. Processes by which trees improve soils are considered, including the cycling of organic matter, nitrogen and other nutrients, other soil properties, and the role of roots. Tree and shrub species with a soil-improving potential are identified. Evidence for soil changes under agroforestry practices is summarized. Direct and indirect evidence indicates that there is a high apparent potential of agroforestry for maintenance of soil fertility, under a wide range of environmental conditions. This high potential, coupled with sparse experimental data, indicates a clear need for further research. Specialized soils research needs and soil aspects of general agroforestry research are outlined. The conclusions from the review are given in the Summary which follows.

SUMMARY

The main conclusions from this review are as follows. "Trees" refers to trees and shrubs. Numbers in brackets refer to sections of the text.

1. Sustainability refers to productivity combined with conservation of natural resources. The maintenance of soil fertility forms a major component of sustainable land use (2.1, 2.2).

2. Diagnosis of the problem of low crop yields should distinguish between low soil fertility, caused by natural soil conditions, and decline in soil fertility, brought about by past land use. These two causes may call for different kinds of action (2.3).

3. Management options for restoring or maintaining soil fertility may be constrained by:

   - type of land: the option is only applicable on land of certain kinds;
   - extent of land: the option requires land additional to that under cultivation;
   - supply problems: availability or cost of inputs.

   Most non-agroforestry methods suffer from one or more of these constraints. The various agroforestry practices are applicable to a wide range of environmental conditions, and do not require inputs that are in short supply or costly. The land requirements of the tree component may be compensated either by higher crop yields or by the value of products from the tree. Thus, agroforestry is widely applicable as a practical management option (2.4).

4. The association between trees and soil fertility is indicated by the high status of soils under natural forest, their relatively closed nutrient cycles, the soil-restoring power of forest fallow in shifting cultivation, and the success of reclamation forestry. More detailed evidence is provided by comparisons of soil properties beneath and outside tree canopies (3.1, 3.2).

5. Trees maintain or improve soils by processes which:

   - augment additions of organic matter and nutrients to the soil;
   - reduce losses from the soil, leading to more closed cycling of organic matter and nutrients;
   - improve soil physical condition;
   - improve soil chemical conditions;
   - affect the quality of plant residues and the timing of their transfer to the soil.

   Some of these processes are proven, others are hypotheses in need of testing (3.3 and Table 5).

6. Soil organic matter plays a key role in maintaining fertility, particularly but not only under low-input conditions. Its main effects are to improve soil physical properties and to provide a reserve of nutrients, progressively released by mineralization (4.1).

7. Herbaceous plant residues applied to the soil initially decompose rapidly, with a half-life in tropical soils of less than six months. Woody residues decompose more slowly. During decomposition there is a loss of carbon and a release of nutrients. The remaining material becomes soil organic matter or humus. There are at least two fractions of humus, labile and stable. It is largely the labile fraction which contributes to nutrient release, and which is directly affected by management. It is not known whether woody residues confer distinctive properties on soil humus (4.2).

8. Taking as a basis the established cycling of organic matter under natural forest, and decline under cultivation, it is feasible to construct a cycle under agroforestry which maintains equilibrium in soil organic matter (4.3).

9. The following are approximate rates of above-ground biomass production which, if returned to the soil, can be expected to maintain organic matter at levels acceptable for soil fertility:

Humid tropics	8000 kg DM/ha/yr
Subhumid tropics	4000 kg DM/ha/yr
Semi-arid zone	2000 kg DM/ha/yr

The net primary production of natural vegetation communities is somewhat higher than these values, whilst that from trees used in agroforestry can approach, and occasionally exceed, that from natural vegetation.

In agroforestry systems, the requirements to maintain soil organic matter can certainly be met if all tree biomass and crop residues are added to the soil. If the woody part of the tree is harvested, this becomes more difficult, and it is impossible if tree foliage and crop residues are also removed (4.4, 4.5).

10. The rate of litter decay is influenced by its quality, or relative content of sugars, nutrient elements, lignin and other polyphenols. Rate of decay determines the timing of nutrient release. It is desirable to synchonize nutrient release with plant uptake requirements. Agroforestry systems offer opportunities to manipulate this release, through selection of tree species and timing of pruning (4.6).

11. In the nitrogen cycle, the major sources of nitrogen to the plants are symbiotic fixation, decay of plant residues, mineralization of humus, and fertilizer. The opportunities to modify this cycle under agroforestry are through the use of nitrogen-fixing trees and shrubs, and to increase the ratio of internal cycling to losses, through improvements in the efficiency of uptake.

Nitrogen-fixing trees and shrubs, growing within practical agroforestry systems, are capable of fixing about 50-100 kg N/ha/yr. The nitrogen returned in litter and prunings may be 100-300 kg N/ha/yr, partly derived by recycling of fertilizer nitrogen (5.1).

12. For other nutrients, the role of trees includes uptake from lower soil horizons, increased efficiency of recycling, providing a balanced nutrient supply, and improving the ratio between available and fixed minerals (the last especially important for phosphorus). For a tree leaf biomass production of 4000 kg DM/ha/yr, the potential nutrient return in litter, as kg/ha/yr, is about 8-12 for P, 40-120 for K and 20-60 for Ca. These amounts are substantial in relation to the nutrient requirements of crops.

    In research, the emphasis on nitrogen fixation has led to a comparative neglect of the effects of agroforestry systems on other nutrients, and on the potential to achieve more closed cycles of all nutrients under agroforestry as compared with agriculture (5.2).

13. There is substantial evidence that trees in agroforestry systems can help to maintain soil physical properties, a major element in soil fertility (6.1).

14. The base content of tree litter can help to check acidification. It is unlikely to be of sufficient magnitude appreciably to moderate the acidity of strongly acid soils, other than in systems which make use of tree biomass accumulated over many years (6.2).

15. As shown in Part I of this review, agroforestry has a potential for control of soil erosion. Since the major adverse effect of erosion is loss of organic matter and nutrients, the potential to control erosion constitutes a major means of maintaining soil fertility (6.3).

16. There has been increasing recent recognition of the importance of roots as a component of primary production. Root biomass of trees is typically 20-30% of total plant biomass (or 25-43% of above-ground biomass). However, net primary production of roots is substantially more than standing biomass, owing to the turnover of fine roots. Roots form an appreciable store of nutrients, and since they are almost invariably returned to the soil, constitute a substantial element in nutrient recycling (7.1).

    Tree root systems, together with their associated mycorrhizae, improve the efficiency of nutrient cycling, defined as the ratio between plant uptake and losses by leaching, etc.. They also contribute to soil physical properties.

    The key to making use of root and mycorrhizal systems in agroforestry lies in maximizing these positive effects whilst reducing tree-crop competition for moisture and nutrients. There is a clear need for more knowledge of root growth and functioning in agroforestry systems (7.2-7.3).

17. 50 tree and shrub species, belonging to 30 genera, which have a potential to maintain or improve soil fertility are identified. Bamboos can also be beneficial. The "top ten" soil-improving trees are:

Acacia albida
Acacia tortilis
Calliandra calothyrsus
Casuarina equisetifolia
Erythrina poeppigiana
Gliricidia sepium
Inga jinicuil
Leucaena leucocephala
Prosopis cineraria
Sesbania sesban

(8.2 and Table 20)

18. The properties which constitute a good soil-improving tree, and thus a means of recognizing one, are not well established. The following are contributory:

- high nitrogen fixation;
- high biomass production;
- a dense network of fine roots or associated mycorrhizae;
- some deep roots;
- high, balanced nutrient content in the foliage;
- appreciable nutrient content in the roots;
- either rapid litter decay, where nutrient release is desired, or a moderate rate of litter decay, for protection against erosion;
- absence of toxic substances in foliage and root exudates;
- for reclamation or restoration, a capacity to grow on poor soils.

19. Most reported indigenous agroforestry systems (other than shifting cultivation) have a spatial mixed structure, in contrast to the spatial zoned systems which are the focus of much current research. In the majority of indigenous systems, control of erosion, maintenance of fertility, or both, are an identified function. Use of poor soils or reclamation of degraded land are also found (9.1).

20. A substantial body of research results on soils exists only for shifting cultivation and the plantation crop combination of coffee or cacao with combinations of Erythrina, Inga and Cordia. Data on hedgerow intercropping systems comes mainly from one site, IITA, Ibadan, although many other studies are in progress or planned. Soils data on other agroforestry practices is sparse (9.3).

21. Results from soils research on agroforestry practices include the following:

Rotational practices For shifting cultivation, dependent on natural forest fallow, there is no way of escaping the large land requirement caused by the fallow-to-cropping ratio necessary to restore soil fertility. Owing to population pressure upon land, this formerly stable system is no longer sustainable in many areas.

As a means of forest clearance, manual and shear-blade methods leave the soil in better condition than bulldozer clearance. The efficiency of rotational systems is necessarily reduced if burning is practised, with consequent loss of most stored carbon, nitrogen and sulphur.

The relative effects on soils of rotational and spatial combinations of trees and crops is not known (9.3.1).

Plantation crop combinations Combinations of coffee or cacao with *Erythrina*, *Inga* and *Cordia* have a large return of organic matter and nutrients to the soil, in litter and prunings, together with a moderate level of nitrogen fixation. Where fertilized, the nutrient return includes nutrients in fertilizer, demonstrating the effectiveness of the system in promoting nutrient retrieval and recycling (9.3.2).

Hedgerow intercropping (alley cropping) A large biomass production can be obtained from hedgerows, together with nitrogen fixation and substantial return of nutrients in prunings. It may be possible to design systems in which crop yields, per unit of total area, are greater with hedgerows than in monocropping. The one available soil monitoring study showed successful maintenance of fertility over six years. Roots are probably a contributory factor (9.3.3).

22. A tentative grouping of agroforestry practices according to their effects on soil fertility is as follows:

Practices with substantial positive effects on soil fertility:

- Improved tree fallow
- Trees on cropland
- Plantation crop combinations
- Home gardens
- Hedgerow intercropping
- Trees for erosion control
- Windbreaks
- Biomass transfer
- Trees on rangeland or pastures
- Woodlots with multipurpose management
- Reclamation forestry leading to multiple production

Practices with smaller positive or neutral effects on soil fertility:

Boundary planting
Plantation crops with pastures

Effects on soil fertility may be positive or negative:

Shifting cultivation

Effects on soil fertility may be neutral or negative:

Taungya

Soil fertility aspects specialized or not relevant:

Apiculture with forestry
Aquaforestry

23. The presence of a given agroforestry practice is by no means sufficient to ensure maintenance of soil fertility. Equally important are: (i) the design of the system, in relation to local environmental and socio-economic conditions; (ii) good management of the system; (iii) the integration of agroforestry with the farming system as a whole (9.5).

24. The basic soil-agroforestry hypothesis is:

"Appropriate agroforestry systems control erosion, maintain soil organic matter and physical properties, and promote efficient nutrient cycling".

It is concluded that this is essentially true. There is a considerable potential for maintenance of soil fertility by means of agroforestry, thereby making a major contribution to sustainable land use. This potential applies to the majority of agroforestry practices, and over a wide range of climatic zones and soil types.

Direct evidence is sparse, but almost invariably supports the basic hypothesis. In addition, there is much indirect evidence (10.1).

25. The conjunction of a high apparent potential with a scarcity of experimental results points clearly and strongly to the need for research.

Research into soil fertility aspects of agroforestry can be conceived in two parts: specialized soil studies and soil aspects of general agroforestry research. Problems for specialized studies are listed, together with a minimum set of soil observations for all substantial agroforestry field trials (10.2, 10.3).

1 INTRODUCTION

1.1 Objectives

This Working Paper forms the second part of a review of the role of agroforestry in soil conservation, the objectives of which are:

i. To summarize the present state of knowledge on agroforestry in soil conservation, including both known capacity and apparent potential.

ii. To indicate needs for research if this potential is to be fulfilled.

The review is primarily directed at scientists engaged in, or about to embark upon, agroforestry research, particularly those in less-developed countries for whom library facilities and other opportunities for access to recent work are limited. Since interdisciplinary cooperation is essential in agroforestry design, both soil specialists and scientists from other disciplines will be involved. The intention is to provide a summary which will serve as a starting point for further work. This will include both fundamental research into aspects of soil/plant relations that are relevant to agroforestry, and applied research directed at the development of practical agroforestry systems for specific regions.

A second intended audience consists of those concerned with planning agroforestry development, in national and international development organizations and aid agencies. For these, the review may help to indicate the degree to which agroforestry has the potential to assist in the solution of problems of soil degradation, the range of agroforestry practices available for this purpose, and how and why they are effective. It also indicates the kinds of research that are needed if development is to proceed on a sound basis.

1.2 Previous reviews

Most accounts of agroforestry mention or emphasize sustainability or soil conservation. Reviews which specifically cover the maintenance of soil fertility include:

- The symposium, "Soils research in agroforestry" (Mongi and Huxley, 1979). As was inevitable at that date, this meeting was largely based on taking experience from other kinds of land use and assessing its significance for agroforestry.

- The review, "Soil productivity aspects of agroforestry" (Nair, 1984). This takes the main existing agroforestry systems, both traditional and modern, and gives general descriptions together with specific considerations of soil productivity. It is the major account to date, and has been freely drawn upon in the present review. It is updated and summarized in Nair (1987a).

- The review, "Tree crops as soil improvers in the humid tropics?" (Sanchez et al., 1985).

- The review, "Increasing the productivity of smallholder farming systems by introduction of planted fallows" (Prinz, 1986).

- The symposium, "Amelioration of soil by trees" (Prinsley and Swift, 1986). 18 papers.

- Lecture notes, "Ecological aspects of agroforestry with special emphasis on tree-soil interactions" (Wiersum, 1986).

- The review, "Soil productivity and sustainability in agroforestry systems" (Sanchez, 1987), which was prepared concurrently with the present text.

1.3 Arrangement of the text

The review of agroforestry in soil conservation as a whole is presented in its present draft form in three parts:

Part I. Control of erosion (Young, 1986a).
Part II. Maintenance of fertility.
Part III. Soil changes under agroforestry (SCUAF): a predictive model (Young, Cheatle and Muraya, 1987).

The present text, Part II, commences with a discussion of problems of soil degradation and the means available to maintain fertility and achieve sustainable land use, placing agroforestry practices into the context of other methods, traditional and modern (Section 2). The distinctive feature of agroforestry is the role of the tree component, and Section 3 gives an outline of the known and possible effects of trees on soils. Sections 4-6 cover specific aspects of soil fertility maintenance and improvement, including the cycling of organic matter and nutrients. Section 7 draws attention to the role of roots.

This is followed by summaries of present knowledge on the effects of agroforestry on soil fertility. Section 8 covers experience with individual tree genera and species whilst Section 9 is based on agroforestry systems. The final section indicates the nature and extent of research needed.

1.4 Climatic zones and soil types

The terms used in the text to describe environmental conditions are based on the generalized classifications in the ICRAF environmental data base (Young, 1983/5).

Climatic zones are defined on the basis of Koeppen climatic classes. The subhumid zone covers a wide range of rainfall and is subdivided into moist and dry subzones, drought being a serious problem only in the latter. The classes used are:

Table 1. Sustainability and soil conservation

Sustainability	=	productivity combined with:
Conservation of natural resources	=	conservation of forests, pastures, etc., including:
Soil and water conservation	=	water conservation, combined with:
Soil conservation	=	maintenance of soil fertility, which requires:
Control of soil erosion	=	water erosion, wind erosion.

Climate and landforms for the most part are not open to modification by man. This applies also to some soil properties, such as profile depth and texture. However, many soil properties can be modified, for better or worse, by land use and management. It is this fact which accounts for the major role of soils in agricultural research and farm management.

Soil fertility is therefore the capacity of soil to support the growth of plants, on a sustained basis, under given conditions of climate and other relevant properties of land.

A narrower view of fertility is sometimes encountered, namely the content of available nutrients. This leads to a myopic view of soil management, to the neglect of physical and biological properties. It is better to refer to this aspect as nutrient content.

2.3 Problems of soil degradation and low soil fertility

2.3.1 Decline in soil fertility

The recognized forms of soil degradation are erosion, physical, chemical and biological degradation, salinization and pollution, where chemical degradation includes both acidification and lowering of nutrient content. They are closely linked: biological degradation influences both soil physical properties and nutrients, whilst erosion is a cause of both biological degradation and loss of nutrients.

All these forms of degradation lead to lowering of soil fertility and land productivity. However, it is the combined effect of lowering of soil organic matter, deterioration of physical properties, lowering of nutrient content and (in some cases) acidification that is commonly referred to as decline in soil fertility.

A number of governments and international agencies have made estimates of the proportions of agricultural land suffering from "slight, moderate and severe" soil degradation. Viewed as precise figures they are of very dubious value, since no soil survey organization has yet systematically applied objective methods of assessing soil degradation. Still less have we any idea of where fertility is still declining and where a condition of low-level equilibrium has been reached. A start has been made in devising methods (FAO, 1979). Degradation assessment is an aim of the Global Environment Monitoring System (GEMS) of UNEP, and attempts are being made to include it in the Soils and Terrain data base of the International Society of Soil Science.

Be that as it may, there can be no doubt that over very large areas under rainfed agriculture in the tropics and subtropics, soil fertility is less than it was 10, 20 or 50 years ago. Older farmers can be prompted to express this view.

In the present context, it is appropriate to cite experience in applying the method of agroforestry diagnosis and design. Following the identification of distinctive land use systems, this method is directed first at finding out the kind and severity of problems existing in these systems, and then at diagnosis of their causes. It has been applied, for example within the all-India agroforestry research programme and the ICRAF agroforestry research network for Africa. Decline in soil fertility, sometimes expressed as low crop yields, is one of the most frequent problems to be identified, over a wide range of environments. In the causal chains produced by the stage of diagnosis, it is very common to find elements such as those in Figure 1.

Soil degradation not only lowers the crop yields obtainable on the basis of intrinsic soil fertility; it can also substantially reduce the response to fertilizers or other inputs. This lowers the economic margin on fertilizer application, tending to perpetuate the situation of low inputs with low outputs.

A partial exception to the above generalization is the case of swamp rice cultivation. On the one hand, this contains natural mechanisms for maintenance of soil fertility; on the other, at least some use of manures and fertilizers is now normal in many countries. There are certainly problems of decline in soil fertility, but these are of a distinctive nature.

2.3.2 Low soil fertility

The problem of inherently low soil fertility is distinct from that of degradation of formerly fertile soils. Population increase has led to many areas that were formerly under natural forest or pastures being taken into cultivation, the so-called "marginal lands". Among the most commonly encountered problems of low natural soil fertility are:

- acidity;
- low nutrient content in general;
- deficiencies in specific nutrients, most commonly nitrogen and phosphorus;
- adverse physical properties.

The most widespread soil types which are commonly cultivated but offer substantial problems of low soil fertility are:

i. The highly weathered, strongly leached, red and yellow soils of the humid tropics or rain forest zone (ferralsols and acrisols). These offer problems of acidity, rapid leaching, low nutrient retention once topsoil organic matter is reduced, and phosphorus fixation.

   The highly-weathered, poorly-structured, sandy soils of the savanna zone, variously known as plateau, sandveld or cerrado soils (often ferralsols, but this soil type is not distinctively identified in any international classification system). These offer problems of low nutrient content, poorly-developed soil structure and, in some cases, acidity.

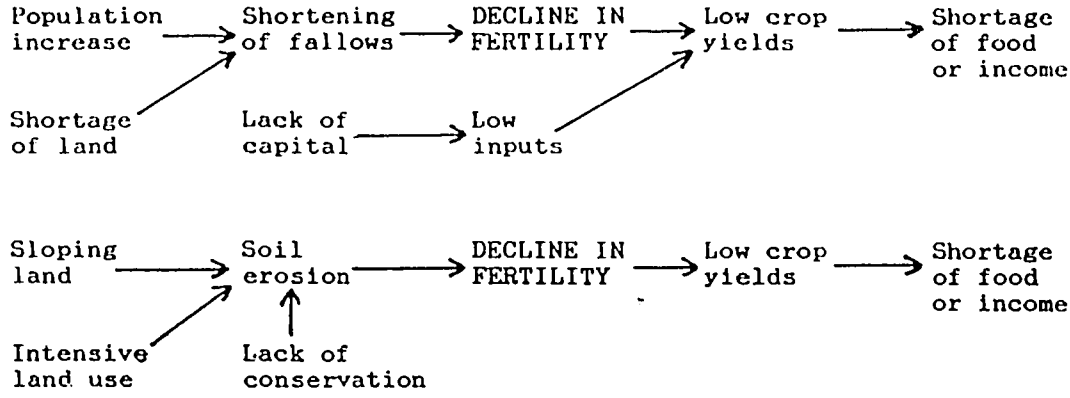

Figure 1. Chains of cause and effect linked to decline in soil fertility.

iii. Black, cracking clays (vertisols). The principal problems are linked to the high content of swelling clays, including the large size of structural aggregates and low porosity.

Each of the above soil types is included in the research networks of the International Board for Soil Research and Management (IBSRAM).

2.3.3 Diagnosis of soil fertility problems in planning for agroforestry

Low soil fertility and decline in soil fertility are distinct problems. They are linked in that an inherently infertile soil is likely to suffer more rapid degradation.

For some purposes, both situations present a similar problem: a nutrient deficiency or poor structure have the same effects whatever their origin. However, in ameliorating problems through soil management, the two situations are distinct. If the soil was originally more fertile and has been degraded, there is a prima facie assumption that fertility can be upgraded by land use practices which more nearly resemble the natural ecosystem, e.g., by the introduction of trees. If the soil was inherently infertile, the task is intrinsically harder. In the former case we are working with nature, in the latter, trying to improve upon her.

Diagnosis of the problem of low crop yields should therefore distinguish between low soil fertility, caused by natural soil conditions, and decline in soil fertility, brought about by past land use.

2.4 Management options for maintaining soil fertility

2.4.1 Practices other than agroforestry

Some lands are newly settled, others have been farmed for hundreds or thousands of years. Many methods have been devised, traditional and modern, for maintaining soil fertility, of which agroforestry is one. For every method there are constraints which limit its applicability as a practical management option in less-developed countries.

Table 2 lists ten traditional practices and two modern ones, plus agroforestry. Three kinds of constraint to their application under practical farming circumstances in the modern world are shown: type of land, extent of land, and supply problems.

A constraint of type of land means that the practice is only applicable on land with certain properties. This applies to use of naturally sustainable soils, and to flood irrigation and swamp rice cultivation. Naturally sustainable soils are those derived from basic rocks (nitosols) which have the capacity to renew fertility by weathering of rock minerals and can sustain nearly continuous cultivation; they are of limited extent, carry high population densities, and are now so intensively used that they are no longer free from degradation.

Table 2. Management practices for maintenance of soil fertility, with constraints to their application.

	Land constraints		Supply constraints
	Type	Extent	
- Cutlivating more land		/	
- Fallowing (shifting cultivation)		/	
- Use of naturally sustainable soils	/		
- Return of crop residues			/
- Crop rotation			
- Intercropping			
- Organic manuring: farmyard manure, compost, mulch			/
- Green manuring		/	
- Flood irrigation	/		
- Swamp rice cultivation	/		
- Fertilizer			/
- Minimum tillage			/
- Agroforestry		?	

There are overlaps between the above: shifting cultivation is an agroforestry practice, many kinds of agroforestry are forms of intercropping, and agroforestry frequently provides organic manures.

Renewal of fertility by the nutrients carried in flood waters was a feature of some of the earliest forms of agriculture, now largely lost through flood control.

Swamp rice cultivation possesses natural methods of fertility renewal, as well as responding well to inputs. It already supports about half the population of less-developed countries, largely in Asia, and is steadily being extended. Predominantly found on alluvial lands, it is unrealistic to suppose that the vast labour input needed to construct irrigated terraces, such as those of Java, the Philippines or Nepal, will be developed in other continents. The high productivity per unit area of land makes it certain that this will continue to be a valuable form of development, but one largely confined to valley floors and alluvial plains.

The constraint of extent of land most obviously affects the first practice listed, that of responding to declining crop yields by clearing and cultivating more land. It applies also to green manuring, a form of non-productive improved fallow which has rarely found favour with farmers.

The technique of fallowing, or shifting cultivation, was formerly the most widespread means of restoring the fertility lost in cultivation. It is also the oldest agroforestry practice. Much has been written about shifting cultivation, the basic message being that of its sustainability provided that the fallow periods are of adequate length, but its soil-degrading nature where these are shortened by pressure of population upon land. The relative lengths of cultivation and fallow are expressed in terms of the R factor, the percentage of cultivation within the total cycle:

$$R\% = \frac{\text{Years under cultivation}}{\text{Years under cultivation plus fallow}} \times 100$$

An early determination for the R factors necessary to maintain soil fertility under shifting cultivation gave the values (Nye and Greenland, 1960; Young, 1976, p.114):

Rain forest:	17 - 33%
Savanna (burnt):	5 - 11%

A more comprehensive study, based on a combination of published evidence and questionnaire enquiry, was carried out as part of an FAO study of population-carrying capacities. This was based on the rest period requirement, defined as the R factor necessary to maintain soil fertility under annual cropping. Estimates of rest period requirements were obtained for the three major ecozones of the tropics, rain forest, savanna and semi-arid; for FAO soil types, combined into 10 groups; and for three levels of inputs: low (traditional farming), intermediate (improved farming) and high (modern, high-technology, farming). The results are shown in Table 3.

There are many problems in making these estimates, primarily that it is rarely known whether, or to what extent, soils are degrading under current land use. The results nevertheless serve to show orders

Table 3. Rest period requirements of tropical soils. All values refer to the cultivation factor, R, expressed as a percentage. Source: Young and Wright (1980).

Soil type (FAO)	Growing period (days)	LOW INPUTS			INTERMEDIATE INPUTS			HIGH INPUTS		
		Rain Forest Zone 270-365	Savanna Zone 120-269	Semi-arid Zone 75-119	Rain forest Zone 270-365	Savanna Zone 120-269	Semi-arid Zone 75-119	Rain forest Zone 270-365	Savanna Zone 120-269	Semi-arid Zone 75-119
R, Q Regosols and Arenosols		10	15	20	30	35	45	50	65	50
F Ferralsols		15	15	20	35	35	40	70	70	75
Fa acric		5			10			60		
A Acrisols		15	15	20	40	35	60	65	65	75
Luvisols		25	30	35	50	50	55	70	75	75
B Cambisols		35	50	40	65	60	60	85	85	80
N Nitosols										
Nd dystric		25	30	40	55	80	70	90	90	90
Ne eutric		40	55	75						
V Vertisols		40	55	45	70	75	75	90	90	90
J, G Fluvisols and Gleysols		60	70	90	80	80	90	90	90	90

of magnitude. The dominant feature is the low proportion of cultivation at which fertility can be sustained at low input levels, particularly on the more extensive soil types. Even at the level of intermediate inputs, the highest which it is reasonably possible to attain in the forseeable future, there are still requirements of between one and two years in three under fallow.

These data conflict with the fact that at present, the predominant form of rainfed agriculture over large parts of the Third World today is more or less continuous cultivation. The implication is that soil fertility either is being degraded or has reached a condition of low-level equilibrium, stable but with low yields. Neither situation meets the definition of sustainability. Non-productive fallowing is no longer a practical management option for sustaining soil fertility.

Four other practices in Table 2 are limited in their applicability by supply constraints. The return of crop residues is certainly of proven value, but many farmers have other uses for these, and there are sometimes pest-control reasons for their removal. Organic additions, including farmyard manure, compost and mulch, are of considerable and proven value, but at levels of application such that only a small proportion of farmland can be treated; it has frequently been shown that 5-10 t/ha/yr of farmyard manure sustains soil fertility, whereas 1-2 t does not.

No single technical improvement has raised crop yields as much as that of fertilizers, but a supply constraint is extremely widespread. It arises not because of absolute shortage at a world scale but because of the many problems which in practice prevent supplies reaching the farmer: lack of foreign currency at the national level, lack of loan facilities, or an inefficient distribution system.

The second modern technology listed, minimum tillage, has been proven as an efficient means of soil fertility maintenance, including erosion control, under experimental conditions and thus high standards of management, in the humid to moist subhumid tropics. It is quite widely practised under mechanized agriculture in the temperate zone, but has rarely been adopted by farmers in the tropics. Its basic requirement of herbicides for weed control poses a direct supply problem, coupled with the environmental hazard of distributing toxic substances to small farmers. Whilst of high potential from a technical point of view, it remains problematic for development unless and until successfully adopted by farmers.

Neither land nor supply constraints apply to the practices of crop rotation and intercropping, but both are means of efficiently sharing limited soil resources rather than restoring them.

Six of these non-agroforestry practices, in combination, possess considerable potential to improve or sustain soil fertility over large areas of the tropics: crop rotation, intercropping, return of crop residues, organic additions, swamp rice cultivation and fertilizer. The remainder are either of limited and decreasing applicability in the modern world, or in one case unproven. With the exception of the two

practices which improve the efficiency of soil resource use, rotation and intercropping, all are subject to substantial constraints, of type of land, extent of land, or supply of material.

2.4.2 Agroforestry as a practical management option

To what extent do the same constraints apply to agroforestry? This question is critical as a prerequisite for research into the benefits, for soil fertility as in other respects, of agroforestry. The more widely applicable is agroforestry, as a practical option in farm management, the more necessary it is to appraise its benefits and improve techniques.

Type of land At an early stage in the modern awareness of agroforestry, it was said to be particularly suited to 'marginal' lands, those with environmental hazards such as drought, erosion or low soil fertility. If this were so, then the extent of its potential application would be substantially reduced, although large areas would still remain.

Evidence from the ICRAF agroforestry systems inventory shown that this is not the case. Agroforestry systems are found in humid regions, on gently-sloping land and on some of the most fertile soils, as well as in more difficult environments. For example, the Chagga home gardens system is found on relatively rich soils, whilst systems of intercropping and grazing under coconuts occur mainly on level, alluvial land, in both cases under plentiful rainfall (Nair, 1984-8, 1987). Current agroforestry research is found in fertile areas as well as marginal, for example on the Lilongwe Plain of Central Malawi, the richest agricultural area in the country.

The reason for the early presumption was that land use problems were generally most serious in the marginal lands, and these were where help from agroforestry was first sought. In the early years of the ICRAF Collaborative Programme, steeply-sloping environments were over-represented, and they are also common in the systems inventory. Certainly, there are some sets of environmental and social conditions in which the potential for agroforestry is particularly high: densely-populated, steeply-sloping lands are one such, frequently having problems of erosion, fertility decline, forest clearance and fuelwood shortage (Young, 1986b, and in press, a).

For one major environment, that of alluvial plains, the potential of agroforestry is probably less than on erosional landforms, although research may prove this to be false; several systems of combining trees with swamp rice cultivation are known (Tran Van Nao, 1983; Weerakoon and Gunasekera, 1985).

Thus agroforestry is potentially applicable to a very wide range of types of land in the tropics. Different practices are applicable in different environments, for example, multipurpose windbreaks in semi-arid areas, or trees for soil conservation on sloping lands. Research into land evaluation for agroforestry is needed to identify those kinds of environment which are particularly suited to specified agroforestry practices (Young, 1984).

Extent of land A constraint of extent of land was noted to apply to fallowing and green manuring, meaning that these practices required land over and above that needed for productive purposes. In the context of agroforestry, there are two critical questions:

i. If trees are grown with herbaceous plants (crops or pastures), is the output from the herbaceous plants reduced?

ii. If the answer to the above is yes, then does the output from the trees more than compensate for the loss in production from the herbaceous plants?

Expressed in economic terms, the first question becomes, "In a given combination of trees with herbaceous plants, are these two components complementary (the presence of one increases output from the other), supplementary (no mutual interactions), or competitive (the presence of one reduces output from the other)?

There are examples, both from traditional systems and recent research, of both gains and losses in crop or pasture production as a result of the presence of trees. If it were to be found that under a wide range of environments and designs, trees led to a loss of food-crop production, then this would seriously reduce the potential of agroforestry. In some spatial agroforestry practices, such as boundary planting or trees on conservation works, the tree component occupies otherwise unproductive land. In others, notably alley cropping, there is an inevitable reduction in the area under crops (perceived by laymen as one of the major obstacles to agroforestry). Also, a fall-off in crop yield close to the tree/crop interface is commonly observed.

The question then becomes whether an increased yield per unit area under crop, brought about by the erosion control and fertility enhancement effects of the trees, more than compensates for the loss of land under crop plus any reduction in yield close to the interface. This is illustrated in Figure 2, which compares monocropping with a zoned spatial agroforestry system in which trees take up 25% of the land. All cases assume a halving of crop yield over a 2 m interface. In Case 1, the crop yield away from the interface is no higher than in the control; crop production is lower, as is the economic return. In Case 2, the presence of trees raises crop yield by 40% away from the interface; this is not sufficient to compensate for the combined effects for displacement plus interface reduction, and crop production is again lower, but this is slightly more than compensated for in money terms by the revenue from the trees. Case 3 shows an 80% increase in yield per unit area under crop (a realistic possibility as a result of erosion control) leading to a 12.5% increase in crop yield for the area as a whole.

The cases in Figure 2 can be closely matched in those rotational agroforestry systems in which there is a pure alternation between tree and crop, giving displacement in time. This does not apply to the taungya practice, since crop production overlaps tree growth. In spatial mixed systems the interface is more or less ubiquitous and

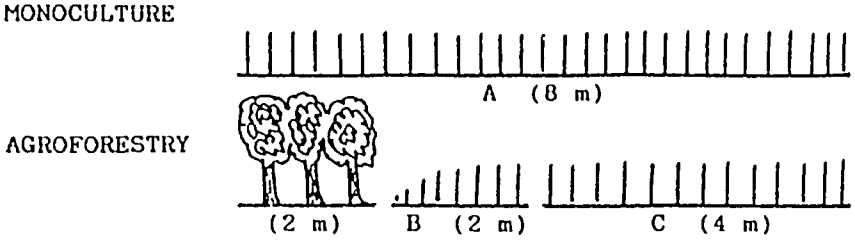

Crop yield and production (arbitrary units):

		CASE 1		CASE 2		CASE 3	
		Yield per m	Production	Yield per m	Production	Yield per m	Production
MONOCULTURE:	Unit A	100	800	100	800	100	800
AGROFORESTRY:	Unit B	100	400	140	560	180	720
	Unit C	50	100	70	140	90	180
	Total crop		500		700		900
	Tree		200		200		200

Value 1 crop unit = 1 money unit
1 tree unit = 0.75 money units

MONOCULTURE:	800	800	800
AGROFORESTRY:	650	850	1050
	CASE 1: Lost production	CASE 2: Reduced crop production but economic compensation	CASE 3: Increased crop and total production

Figure 2. Tree/crop displacement, yield, production and value.

there is often very little spatial displacement or reduction in area of crop: the question then takes the simpler form of whether crop yield is higher with trees than without.

Which of these three cases is likely to prevail under different circumstances is a basic question for agroforestry research.

Supply constraints The main inputs required in agroforestry, additional to those in agriculture, are supplies of tree germplasm and seedlings. Whilst there may be temporary local shortages, there are no intrinsic supply constraints. Local tree nurseries are simple and relatively cheap to construct. There is nothing in agroforestry development projects comparable to the level of expense involved in, say, construction of dams or roads. The supply constraint of fertilizers is likely to be reduced or unchanged.

In present-day agroforestry development, the major costs are research and training. Whilst these will continue to be necessary, their magnitude at present is a temporary phenomenon, stemming from the rapid growth in awareness of the potential of agroforestry for development.

With respect to inputs and capital, therefore, agroforestry is a relatively undemanding form of development, with no serious supply constraints.

Agroforestry is also a highly practicable management option at the farm level. It requires nether substantial capital nor machinery, and the necessary skills at tending trees can be learnt by farmers with limited formal education.

Summary The position of agroforestry with respect to the three constraints to application is therefore:

Type of land:	Given the number of different practices, agroforestry is applicable over a wide range of land types, with greater potential on some than others.
Extent of land:	Many agroforestry practices involve some degree of reduction in area of crops through displacement by trees. The loss of cropped area can be compensated either if the yield per unit area under crop is higher, or if value of production from the tree component compensates for loss of crop production. Which of these situations applies in differing circumstances is a matter for research.
Supply:	Agroforestry does not require inputs that are in short supply or which involve hard-currency imports, and is a relatively inexpensive form of development both for government and the farmer.

Both at governmental and farm levels, therefore, agroforestry is very widely applicable as a practical management option.

2.5 The range of agroforestry practices

The following classification is given first, to illustrate the wide range of different kinds of land use that fall under the general term agroforestry, and secondly as a basis for discussion in the succeeding text.

Agroforestry refers to land use systems in which trees are grown in association with herbaceous plants, and in which there are both ecological and economic interactions between the tree and non-tree components. In this definition, 'tree' refers to all woody plants---trees, shrubs and bamboos; the herbaceous plants may be agricultural crops (annual or perennial) or pastures.

An agroforestry practice is an arrangement of components (trees, crops, pastures, livestock, etc.) in space and time. An agroforestry system is a specific local example of a practice, characterized by environment, plant species and arrangement, management, and social and economic functioning. There are hundreds, possibly thousands, of agroforestry systems but only some 20 distinct practices (Nair, 1985, 1987a).

Table 4 is a classification of agroforestry practices, intended as a basis for research (Huxley, 1986a). The highest level is based on the components present: trees with crops, trees with pastures, practices in which the tree component is dominant, and practices involving special components.

The second level is based on the spatial and temporal arrangement of components. Rotational practices are those in which the association between trees and crops takes place primarily over time, spatial practices those in which it is primarily a combination in space. Spatial systems are divided into mixed and zoned. In mixed spatial practices, the trees and herbaceous plants are grown in intimate mixtures, with the trees distributed over more or less the whole of the land area. In zoned spatial practices, the trees are either planted in some systematic arrangement, such as rows, or are grown on some element in the farm, such as boundaries or soil conservation structures.

The third level of classification employs detailed spatial arrangement and functions as criteria.

As a basis for research, sylvopastoral practices and those with special components are clearly distinct, requiring facilities for pasture and livestock or other specialized studies. The remaining groups differ in the nature and extent of tree/crop or tree/pasture interactions. In purely rotational systems, the interaction takes place mainly through inheritance of soil changes. In spatial mixed systems, the tree/crop interface is distributed over all or much of the land management unit, whereas in spatial zoned systems it occupies defined locations.

Table 4. Agroforestry practices.

MAINLY AGROSYLVICULTURAL (trees with crops)

Rotational:

Shifting cultivation
Improved tree fallow
Taungya

Spatial mixed:

Trees on cropland
Plantation crop combinations: - with upper-storey trees
(cf. also with pastures) - with lower-storey
- tree/shrub crops
- with herbaceous crops
Tree gardens: - multistorey tree gardens
- home gardens

Spatial zoned:

Alley cropping
Boundary planting
Trees for erosion control: - barrier hedges
- on grass barrier strips
- on bunds etc.
- on terraces
Windbreaks and shelterbelts (also sylvopastoral)
Biomass transfer

MAINLY OR PARTLY SYLVOPASTORAL (trees with pastures and livestock)

Spatial mixed:

Trees on rangeland or pastures
Plantation crops with pastures

Spatial zoned:

Live fences
Fodder banks

TREE COMPONENT PREDOMINANT (cf. also taungya)

Woodlots with multipurpose management
Reclamation forestry leading
to multiple use: - on eroded land
- on salinized land
- on moving sands

OTHER COMPONENTS PRESENT

Apiculture with forestry
Aquaforestry (trees with fisheries)

SPECIAL ASPECTS - trees in water management
- irrigated agroforestry

3 EFFECTS OF TREES ON SOILS

3.1 How we know that trees improve soils

Underlying all consideration of the role of agroforestry in maintenance of soil fertility is the fundamental proposition that trees improve soils. Before examining the processes and evidence in detail, it is worth setting out how we know that this is true.

i. The soil that develops under natural woodland or forest, the classic brown earth of temperate region or red earth of the tropics, is fertile. It is well-structured, has good moisture-holding capacity, is resistant to erosion and possesses a store of fertility in the nutrients bound up in organic molecules. From time immemorial, farmers have known that they will get a good crop by planting on cleared natural forest.

ii. The cycles of carbon and the major nutrients under natural vegetation have been demonstrated, most notably in rain forest but also in savanna and semi-arid ecosystems. These cycles are relatively closed. Thus, not only can we observe the fact that trees maintain soil fertility, but the details of how this is achieved are known.

iii. The practice of shifting cultivation provides a demonstration of the capacity of forest to restore fertility. Nowadays this practice is often treated as environmentally undesirable, and certainly this is so once population pressure on land has forced the shortening of fallows. Given enough land and thereby length of fallow, however, this is a sustainable practice, and provides a demonstration of the capacity of forest or woodland to restore the fertility lost during cultivation.

iv. Reclamation forestry, the afforestation of eroded or otherwise degraded land, has demonstrated the power of trees to build up soil fertility, notably in India.

v. Finally, among these background considerations, is the almost invariable decline in soil fertility that follows complete forest clearance.

3.2 Tree-soil transects

Further evidence for the effects of trees on soils comes from comparing soil properties under the canopy of individual trees with those in the surrounds without a tree cover. For *Acacia albida*, cases of 50-100% increases in organic matter and nitrogen under the canopy are known, together with increased water-holding capacity (Felker, 1978). In northern Nigeria, on an acid, sandy soil, the following effects occur under the neem tree (*Azadirachta indica*) (Radwanski and Wickens, 1981):

Soil property	Bare fallow farmland	Fallow under neem
pH	5.4	6.8
Organic C, %	0.12	0.57
Total N, %	0.013	0.047
P, ppm	195	68 (lower)
TEB, me/100 g	0.39	2.40
CEC, me/100 g	1.70	2.25
Base saturation, %	20	98

This approach has been extended by the technique of tree-soil transects, lines of soil samples taken from the trunks of trees to land beyond the canopy. To date, it has been applied to natural savannas. In moist subhumid zone, Belize, tree-soil transects of broadleaf savanna trees showed considerable enrichments in N, P, K, Ca and other bases under trees, the differences starting near canopy margin and increasing towards the trunk (Figure 3A). Isopleths of Ca, Mg and base saturation were mapped by grid sampling of topsoils. Sampling in depth showed that for one species, the topsoil enrichment was apparently at the expense of lower values at 20-40 cm, but for others the positive effect of the tree continued in depth. Root excavation showed unexpectedly shallow systems, so these differences were attributed not to abstraction of elements from deep soil horizons but to the cumulative effect over time of preferential retention of atmospheric nutrient inputs, leading to a richer plant-soil nutrient cycle under the tree (Kellman, 1980).

On a sandy luvisol in the semi-arid zone, northern Senegal, soil organic carbon, total nitrogen and the mineral nitrogen flux showed a progressive decrease from the trunk to the canopy margin under Acacia senegal, Balanites aegyptica and baobab (Adansonia digitata) (Figure 3B). This was considered either to be a primary effect of tree litter, or a secondary effect, reduced evapotranspiration allowing better growth of herbaceous plants (Bernhard-Reversat, 1982). Current research in the semi-arid areas of the Tsavo West National Park, Kenya, is showing substantially higher organic matter, nitrogen, microbial activity and, especially, phosphorus under canopies of baobab (Adansonia digitata) and Acacia tortilis. Possible causes are bird droppings and elephant dung (A.J. Belsky, personal communication).

Such soil enrichment could result from many causes: stemflow from the tree trunk, preferential trapping of atmospheric inputs, enhanced nutrient uptake from depth, reduction in leaching loss by tree roots, or effects of animals and birds. Animals (wild and domesticated), like humans, prefer to stand under trees when not engaged in activities that require otherwise; they therefore selectively concentrate nutrients from the surrounding land on which they graze.

This is a fertile area for research! The basic soil transect technique could also be applied to lines of blocks of trees in agroforestry systems, and to newly-planted trees as well as natural vegetation. Examples are transects across tree-crop interface experiments, hedgerows in hedgerow intercropping systems, and shelterbelts. There is scope for much ingenuity in design to separate the various causes of soil differences.

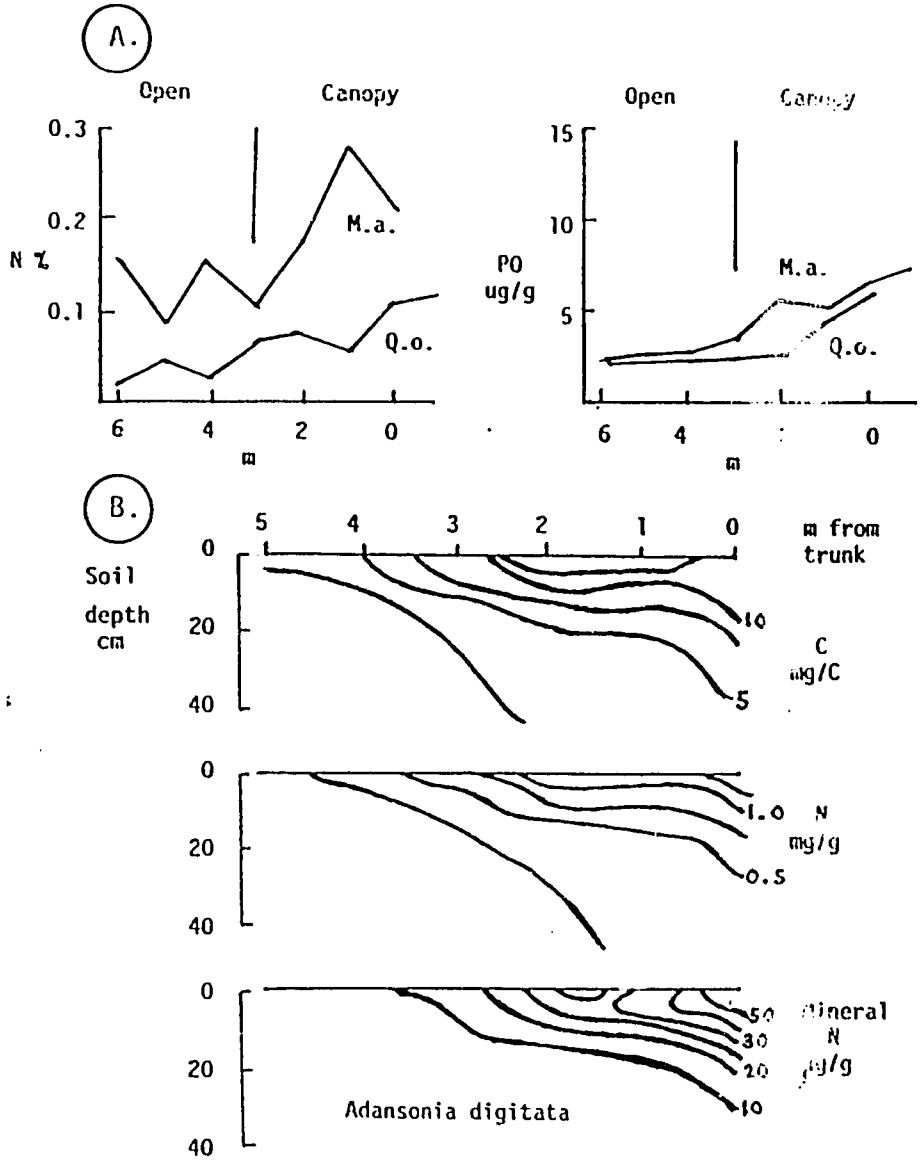

Figure 3. Tree-soil transects. A. Savanna, Belize, topsoil. M.a. = Miconia albicans, Q.o. = Quercus oleoides. After Kellman (1980). B. Semi-arid grassland, Senegal. After Bernhard-Reversat (1982).

3.3 Processes by which trees improve soils

Table 5 gives the known or possible effects of trees on soils. This refers to a tree or shrub cover in general, not specifically within agroforestry systems. They range between proven and quantitatively demonstrated effects at one extreme to plausible but unproven hypotheses at the other. The following is the status of each suggested effect, many of which are discussed in more detail in later sections.

Processes which augment additions to the soil:

Maintenance or increase of soil organic matter Proven and widely demonstrated, including through build-up of organic matter in forest fallows, reclamation forestry and chronosequences of soil development on recent sediments. Quantitatively known through studies of organic matter cycling under natural forest (Section 4).

Nitrogen fixation Proven, both indirectly through soil nitrogen balance studies and directed by observation of nodulation and 15-N tracer studies (Section 5.1.2).

Nutrient uptake Plausible hypothesis, not specifically demonstrated. The hypothesis is that in general, trees are more efficient than herbaceous plants in taking up nutrients released by weathering in deeper soil horizons. Potassium, phosphorus, bases and micronutrients are released by rock weathering particularly in the B/C and C soil horizons into which tree roots often penetrate. The strong gradient in nutrient content between forest topsoils and subsoils indicates recycling through litter, although other processes are also involved. Direct proof would be difficult.

Atmospheric input Atmospheric deposition makes a significant contribution to nutrient cycling, greater in humid regions than dry. It comprises nutrients dissolved in rainfall (wet deposition) and those contained in dust (dry deposition). Trees do not increase rainfall (pace some eco-enthusiasts!) but they do reduce wind speed considerably and thereby provide preferential conditions for deposition of dust.

A more complex situation applies to the nutrients contained in throughfall and stemflow, the former being rain dropping from canopy leaves, the latter that flowing down stems. These nutrient amounts are substantial, in some forests being the major source (exceeding litter) for K, Na and S. However, it is difficult to determine what proportions of dissolved nutrients originate from leaf leaching, and thus recycling, and from washing, and thus atmospheric net input, and estimates range widely (Parker, 1983).

It would be useful to make experimental comparisons between nutrient deposition on forested and open sites. An agroforestry element could be added by addition of sites with belts of trees (e.g. windbreaks, hedgerow intercropping).

Table 5. Processes by which trees maintain or improve soils. Not all of the listed effects are proven, see text.

(a) Processes which augment additions to the soil:

- maintenance or increase of soil organic matter, through carbon fixation in photosynthesis and its transfer via litter and root decay;
- nitrogen fixation, by some leguminous and a few non-leguminous trees;
- nutrient uptake: the taking up of nutrients released by rock weathering in deeper layers of the soil;
- atmospheric input: the provision by trees of favourable conditions for input of nutrients by rainfall and dust, including via throughfall and stemflow;
- exudation of growth-promoting substances by the rhizosphere.

(b) Processes which reduce losses from the soil:

- protection from erosion, and thereby loss of organic matter and nutrients;
- nutrient retrieval: trapping and recycling nutrients which would otherwise have been lost by leaching, including through the action of mycorrhizal systems associated with tree roots;

(c) Processes which affect soil physical conditions:

- maintenance or improvement of soil physical properties (structure, porosity, moisture retention capacity and permeability) through a combination of maintenance of organic matter and effects of roots;
- modification of extremes of soil temperature, through a combination of shading by canopy and litter cover.

(d) Processes which affect soil chemical conditions:

- reduction of acidity, through addition of bases in tree litter;
- reduction of salinity or sodicity.

(continued)

Table 5 (continued)

(e) Processes related to the quality of plant residues and the timing of their transfer to the soil:

- production of a range of different qualities of plant litter, through supply of a mixture of woody and herbaceous material, including root residues;
- timing of nutrient release: the potential to control litter decay through selection of tree species and management of pruning, and thereby to synchronize nutrient release from litter decay with requirements of plants for nutrient uptake;
- effects of shading on microclimate, soil climate and thereby on rates of litter decay and mineralization of soil organic matter.

Table 6. Adverse effects of trees on soils.

- Loss of organic matter and nutrients in tree harvest;
- nutrient competition between trees and crops;
- moisture competition between trees and crops;
- production of substances which inhibit germination or growth;
- acidification by trees which produce mor-type humus.

Exudation of growth-promoting substances by the rhizosphere Suggested but not demonstrated. Specialized biochemical studies would be required to demonstrate the presence and magnitude of any such effect, and to separate it from other influences of roots on plant growth (Section 7).

Processes which reduce losses from the soil:

Protection from erosion Discussed in Part I of this review (Young, 1986a). Salient points are: (i) the major adverse effect of erosion is loss of soil organic matter and nutrients with consequent lowering of crop yields; (ii) a forest cover reduces erosion to low levels, primarily through the effect of the ground surface cover of litter and understorey vegetation, the protection afforded by the tree canopy being relatively slight.

Nutrient retrieval It is commonly supposed that tree root systems intercept, absorb and recycle nutrients in the soil solution that would otherwise have been lost in leaching, so making the nutrient cycle more closed. The mycorrhizal systems associated with the tree roots are an agent in this process through their penetration of a large proportion of the soil volume, leading to uptake of nutrients which can only move short distances by diffusion. Evidence for this mechanism comes from the relatively closed nutrient cycles found under forest. The efficiency of mycorrhiza is demonstrated by the sometimes dramatic effects of mycorrhizal inoculation on plant growth (Atkinson et al., 1983; ILCA, 1986). Direct demonstration of the nutrient-retrieval process would require isotopic tracer studies, comparing the uptake of labelled fertilizer between tree and non-tree plant covers (Sections 5.1.3, 5.2.2).

Processes which affect soil physical conditions:

Maintenance or improvement of soil physical properties The superior soil structure, porosity, moisture characteristics and erosion resistance under forest is well documented, as is their decline on forest clearance. Porosity is a key to many other physical properties: pores 5-50 um diameter determine available water-holding capacity whilst those over 250 um are necessary for root penetration. There is much evidence of the influence of physical properties of tropical soils on crop growth, independent of nutrient or other effects (Lal and Greenland, 1979) (Section 6.1).

Modification of extremes of soil temperature There is experimental evidence from studies of minimum tillage that a ground surface litter cover greately reduces the extremely high ground surface temperatures, sometimes over 50°C, that are experienced on bare soils in the tropics; and that high temperatures adversely affect crop growth (Harrison-Murray and Lal, 1979). The leaf litter cover produced by trees can be expected to have similar effects.

Processes which affect soil chemical conditions:

Reduction of acidity Trees tend to moderate the effects of leaching through addition of bases to the soil surface. However, whether tree litter can be a significant means of raising pH on acid soils is doubtful, owing to the orders of magnitude involved, except through the release of bases that have been accumulated during many years of tree growth, as in forest clearance or the chitemene system of shifting cultivation (Section 6.2).

Reduction of salinity or sodicity Afforestation has been successfully employed as a means of reclaiming saline and alkaline soils. For example, under Acacia nilotica and Eucalyptus tereticornis in Karnal, India, lowering of topsoil pH from 10.5 to 9.5 in five years, and of electrical conductivity from 4 to 2, has been reported, but with tree establishment assisted by additions of gypsum and manure (Gill and Abrol, 1986; Grewal and Abrol, 1986). Part of the soil improvement in this type of reclamation forestry is no doubt due to drainage improvement by ditches, leading to better leaching. The role of the trees could be tested by comparison with control plots given the same drainage, soil amelioration and other management measures, but without trees.

Processes related to the quality of plant residues and the timing of their transfer to the soil:

Production of a range of qualities of plant litter This has the effect of distributing, over time, the release of nutrients mineralized by litter decay. Trees provide both woody and herbaceous residues, and thus a range in quality both of above-ground litter and root residues (Section 4.6). Whether any distinctive properties are conferred upon soils by woody residues, or if these contribute differentially to certain fractions of humus, has not been established (Sections 4.2.2, 4.2.3).

Timing of nutrient release Given the range in quality of tree residues, their different rates of decay will cause the release of nutrients to be spread over time. In managed systems this release can be partly controlled, through selection of tree species on the basis of rates of leaf decay, and timing of pruning. It is therefore possible partially to synchronize the release of nutrients from litter with the requirements for plant uptake. That this can be achieved is a fundamental hypothesis of the Tropical Soil Biology and Fertility Programme (Swift, 1984, 1985) (Section 4.6).

Effects of shading on soils Through reduction in extremes of soil surface temperature, trees may reduce the rate of loss of soil organic matter by oxidation. Estimates of the humus decomposition constant are higher for agriculture than for woody fallows, although this may be primarily due to the greater aeration of the soil in cultivation.

3.4 Adverse effects

Trees can have directly adverse effects on soil properties, whilst other consequences arise when they are grown in association with herbaceous plants. Leaving aside shading, a major problem at the tree/crop interface but unconnected with soils, the main soil-related problems that can arise are given in Table 6.

Loss of organic matter and nutrients in tree harvest Of concern in forestry is the depletion of soil resources by fast-growing trees, with consequences for subsequent forest rotations. Trees assemble considerable quantities of nutrients in their biomass, part of which is necessarily removed in harvest. The problem is greatest where there is whole-tree harvesting, most commonly the gathering up of fine timber and litter by local people after timber harvest. From a soil management point of view, it is desirable to allow all branches and litter to decay *in situ* and even to return bark, but this frequently conflicts with social necessity--- to the local population it appears totally unreasonable!

In agroforestry, the soil-improving potential of trees is greatly reduced if both foliage and wood are harvested, for fodder and fuelwood.

Nutrient competition between trees and crops In general, trees are less demanding of nutrients than crops. The problem is most likely to be serious when trees or shrubs have an established root system which can dominate that of newly-planted annual crops. It is desirable that trees in agroforestry should have rooting systems which penetrate deeply but have limited lateral spread. Whereas lateral spread of the canopy can be controlled by pruning, root pruning is generally too expensive to be practicable.

Moisture competition between trees and crops In the semi-arid and dry savanna zones, this is possibly the most serious problem in agroforestry research and design. Discussion of soil moisture competition lies beyond the scope of the present review.

Production of substances which inhibit growth or germination Some *Eucalyptus* species produce toxins which can inhibit the germination or growth of some annual herbs (Poore and Fries, 1985). The production of allelopathic substances by tree roots has been suggested as a possible problem in agroforestry, although there is little evidence.

Acidification by trees which produce mor-type humus This is a known problem in conifer plantations of the temperate zone.

Wherever a decrease in crop or pasture growth close to, or beneath, trees or shrubs is observed, it is important to establish the degree to which this is due to shading, nutrient competition, moisture competition, growth-inhibition, or light suppression by leaf litter.

4 SOIL ORGANIC MATTER

4.1 Organic matter and soil fertility

Of all the effects of trees, that of maintaining soil organic matter levels through the supply of litter and root residues is the major cause of soil fertility improvement. It is the prime mover, from which stem many of the other soil-improving processes (Table 7).

The main effects are on soil physical properties and nutrient supply. The physical effects are produced by the action of organic gums and fungal mycelia in binding soil particles into aggregates, and by the growth and decay of root systems. This leads to maintenance of soil structure and structural stability, and a balanced distribution of pore sizes, including both fine (water-retentive) and coarse (transmission) pores. The consequences are a combination of water-holding capacity with permeability and aeration, ease of root penetration and, through stable structure coupled with permeability, erosion resistance. The whole forms an interactive complex of processes, producing favourable physical properties so long as organic matter is maintained; its loss leads to their degradation, and where serious can lead to consequences such as capping, compaction or pan formation.

The major chemical effect is upon nutrient supply, with three favourable aspects: the supply is balanced across the range of primary, secondary and micronutrients; so long as it remains in the form of organic molecules, it is protected from leaching (other than in the special case of podzols); and there is a slow release of nutrients, in available forms, through mineralization. This release is to some extent synchronized with plant demands through the fact that litter decay is fastest at the onset of the rains; the capacity to control the timing of pruning and litter addition leads to a potential in agroforestry to regulate nutrient release so as to further synchronize it with plant requirements.

Other favourable consequences of organic matter upon nutrient supply are the blocking of P-fixation sites by organic complexes, and the complexing and improved availability of micronutrients. It has also been suggested that a good organic matter status provides a favourable soil environment for nitrogen fixation.

A limit to the capacity of organic residues to supply nutrients should be emphasized, namely that what is not there in the first place cannot be recycled. If the soil parent material is low in P or K, then however closed may be the soil-plant system, it cannot become richer in these elements without external inputs.

A further chemical effect is the considerable enhancement of cation exchange capacity by the clay-humus complex; this is particularly important where the CEC of the clay minerals is low, as in soils dominated by kaolinitic clay minerals and free iron oxides, such as ferralsols and acrisols. Raising of the CEC improves nutrient retention, both of naturally recycled elements and those added in fertilizers. A better response to fertilizers on soils with good organic matter status has frequently been observed.

Table 7. Effects of organic matter on soil fertility.

	Primary effects	Consequences
Physical effects	Binding of particles, root action; leading to improved structure structural stability, balance between fine, medium and large pores	Improved root penetration, erosion resistance, and moisture properties: - water-holding capacity - permeability - aeration
Chemical effects	Nutrient source, balanced supply, not subject to leaching, with slow (partly controllable) release	Including better response to fertilizers, non-acidifying source of N, mineralization of P in available forms
	Complexing and enhanced availability of micronutrients	
	Increased CEC	Better retention of fertilizer nutrients
	Improved availability of P through blocking of fixation sites	
Biological effects	Provision of a favourable environment for N fixation	
	Enhanced faunal activity	

Cf. Young (1976), Swift and Sanchez (1984), Lal and Kang (1982), IRRI (1984), Piccolo (1986), Dudal (1986) Johnston (1986).

Soil humus also exerts a buffering action against acidity. Coupled with the fact that natural sources of nitrogen are non-acidifying, this offers a potential to check the problem of soil acidification.

Of the effects of organic matter on soil biological activity, the possible link to nitrogen fixation has been noted. Soil humus is the substrate for soil fauna, and whilst these are the primary cause of organic matter loss, through oxidation, there are favourable effects, such as breakdown of pesticide residues. A list of 22 potential links between soil biological processes and management practices is given by Swift (1984, p. 17).

Two of the above aspects are primary themes in the Tropical Soil Biology and Fertility (TSBF) programme, the aim of which is to determine management options for improving tropical soil fertility through soil biological processes. The synchrony theme (SYNCH) aims to decribe the mechanisms which determine the transfer of nutrients from decomposing organic matter to plant roots, the understanding so gained leading to a potential to synchronize this transfer through management practices. The soil organic matter theme (SOM) aims to determine the relationship between the organic and inorganic inputs to soil and the quality and quantity of soil organic matter formed, again with the intention of leading to an understanding of processes that will permit manipulation through management (Swift, 1984, 1985). The successive publications of this programme show a growing recognition that agroforestry provides some of the major practical management options to improving fertility through soil biological processes.

4.2 The nature of soil organic matter

4.2.1 General

Soil organic matter is highly complex and its nature is the subject of specialized studies, far removed from the normal run of agroforestry research. An account of some aspects is given here for two reasons. First, those conducting studies of the effects of agroforestry systems upon soils should be aware that soil organic matter is not a single, homogenous, entity. Secondly, trees differ from crops in providing woody as well as herbaceous residues, and it may prove to be the case that woody material makes some distinctive contribution to soil organic matter. A working hypothesis for agroforestry research is suggested in Section 4.2.4.

4.2.2 Fractions of organic matter

In terms of its physical state, the organic material present in a soil consists of two parts, plant remains and fully-decomposed organic matter or humus. When a soil is prepared for analysis the larger fragments of plant litter and roots are normally removed, the litter by scraping it off the surface prior to sampling, the roots by retention on the 2 mm sieve during pre-treatment. However, plant fragments that are finely broken up but only partly decomposed remain. This has been called the light fraction of organic matter, since it can be separated

by ultrasonic dispersion and flotation (density <2.0). Of the plant nutrient reserve stored in the soil, up to 25% may be in the light fraction (Ford and Greenland, 1968; Ford et al., 1969).

Early work on the soil organic matter cycle was based on the two components, litter and humus (where "litter" includes root residues). In the process of conversion from litter to humus, through the agency of soil fauna, there is a loss of carbon through microbial oxidation. The magnitude of such loss is one of the biggest unknown factors in the carbon cycle. Nye and Greenland (1960) suggested that between 10 and 20% of litter carbon was transformed into soil humus, and between 20 and 50% of root residues. This will be referred to as the litter-to-humus conversion loss, i.e. 80-90% for above-ground plant residues and 50-80% for roots.

After transformation to humus, a continuing loss of carbon takes place, again by microbial oxidation. The fundamental concept is that the amount of carbon so lost is proportional to that initially present, the rationale being that the population size of the organisms responsible depends on the substrate on which they feed, namely organic material. The proportion of soil humus carbon lost by oxidation during one year is the humus decomposition constant. From calculations based on carbon changes and equilibrium levels under shifting cultivation, Nye and Greenland estimated the decomposition constant under forest fallow (Kf) as 0.03, and under the greater soil disturbance of the cultivation period (Kc) as 0.04 (as percentages, 3 and 4% respectively). The equation underlying this concept is of the form:

$$C1 = Co - KCo$$

or

$$C1 = Co\ (1 - K)$$

where Co = initial soil humus carbon, C1 = carbon after 1 year, and K is the decomposition constant.

These two parameters, conversion loss and decomposition constant, are the basis of the earlier approach to the soil organic matter balance. Estimates of their value are given in Table 8. Subject to reservations, this approach is still valid, and remains the basis for much applied research.

New light was cast upon organic matter decomposition by the technique of isotopic labelling. Plants grown in an atmosphere artificially enriched in carbon-14 acquire tissues carrying this isotope. The amount of carbon-14 present can be detected regardless of the physical state it is in. By adding this labelled plant material to soil, its subsequent history can be followed. The methods are described by Vose (1980).

This technique was first applied to soils in temperate environments and subsequently in the tropics. The main isotope-based studies and reviews drawn upon in the following account are as follows: Jenkinson (1977), Jenkinson and Ayanaba (1977), Jenkinson and Rayner (1977),

Table 8. Estimates of the litter-to-humus conversion loss and the humus decomposition constant. Data are not fully comparable, owing to different assumptions made.

Country, environment	Conversion loss (or loss in 1 yr) (fraction)	Decomposition constant (fraction)	Source
West Africa: forest	Above-ground: 0.75-0.9	Kf = 0.03, Kc = 0.033	Nye and Greenland (1960)
savanna	Roots: 0.5-0.8	Kf = 0.008-0.009, Kc = 0.045	
Senegal, savanna woodland	0.5 - 0.9	Kf = 0.04-0.07, Kc = 0.02-0.05	Charreau and Fauck (1970)
Senegal: forest savanna		Kf = 0.44, Kc = 0.06 K = 0.02-0.09	Charreau (1975)
Nigeria, savanna		Kc = 0.04-0.05	Jones and Wild (1975)
Nigeria, moist subhumid		K = 0.07	Jenkinson and Ayanaba (1977)
Costa Rica	0.65	K = 0.13	Sauerback and Gonzalez (1977)
U.K., temperate		Ka = 0.014 Kb = 0.00035	Jenkinson and Rayner (1977)
Costa Rica	0.64 - 0.77	r = 0.12-0.23	Gonzalez and Sauerback (1982)
Queenland		Ka = 0.153-0.371 Kb = 0.022-0.0036	Dalal (1982)
South Australia	0.7		Ladd and Amato (1985)
Thailand		K = 0.077-0.088	Kyuma et al. (1985)
U.K., temperate		Kn = 0.028	Lathwell and Bouldin (1981), from sources quoted
U.S.A., temperate		Kn = 0.024-0.063	
Zaire		Kn = 0.330	
Assam, India		Kn = 0.095	
Puerto Rico		Kn = 0.224	

Kf = under vegetation (fallow), Kc = under cultivation, Ka, Kb = different organic matter fractions, Kn = for release pf nitrogen

Sauerbeck (1977, 1983), Sauerbeck and Gonzalez (1977), Schnitzer (1977), IAEA (1977), Paul and van Veen (1978), Cerri et al. (1982), Gonzalez and Sauerbeck (1982), van Faassen and Smilde (1985), Ladd and Amato (1985).

Where carbon-14 enriched plant residues are added to soils, there is a decay curve of the same form both in temperate and tropical soils. This shows a rapid loss over the first 3-6 months, changing fairly abruptly to a slower and exponential rate of loss (Figure 4). A comparative study in Britain (Rothamsted) and a moist subhumid environment in Nigeria (Ibadan) showed that the two curves could be superimposed almost exactly if the time scale for Nigeria was divided by four. Subsequently, work in South Australia, under intermediate climatic conditions, produced a decomposition rate twice that at Rothamsted and half Ibadan. In Costa Rica, under a humid tropical environment, the rate was similar to the Nigerian study. This last study was conducted on a variety of soils with the aim of showing how it varied with soil properties; contrary to expectations, the differences were relatively small and displayed no clear relations.

Curves for exponential decay of carbon are of the form:

$$Ct = Co.e^{-rt}$$

where Ct = carbon after time t (years), e is the exponential constant, and r is a parameter which describes the rate. For periods of a year and slow rates of decay (K and r < 0.1), the two preceding equations are nearly equivalent and K is nearly equal to r. The half-life of soil humus carbon, HL (years), is given by:

$$HL = 0.693/r$$

where 0.693 is the natural logarithm of 2.

Where there is a two-part curve, as in Figure 4, the equation for decay becomes:

$$Ct = C1.e^{-r1t} + C2.e^{-r2t}$$

where C1 and C2 are the faster and slower-decaying fractions of carbon, and R1 and R2 the corresponding values of r. In Gonzalez and Sauerbeck's (1982) results for Costa Rica soils, C1 ranged from 52-72% of total carbon and C2 correspondingly from 28-48%. Values of r1 were mainly in the range 3. 4 - 7.4, those of r2, 0.12 - 0.23. Jenkinson and Ayanaba's (1977) values for Nigeria are similar.

Three lines of evidence suggest the existence of a third organic matter fraction with a considerably slower rate of decay. First, there has for long been the anomaly that radiocarbon dating of soil organic matter has sometimes yielded values of hundreds of years. Secondly, given values of r1 and r2, it is possible to calculate the expected

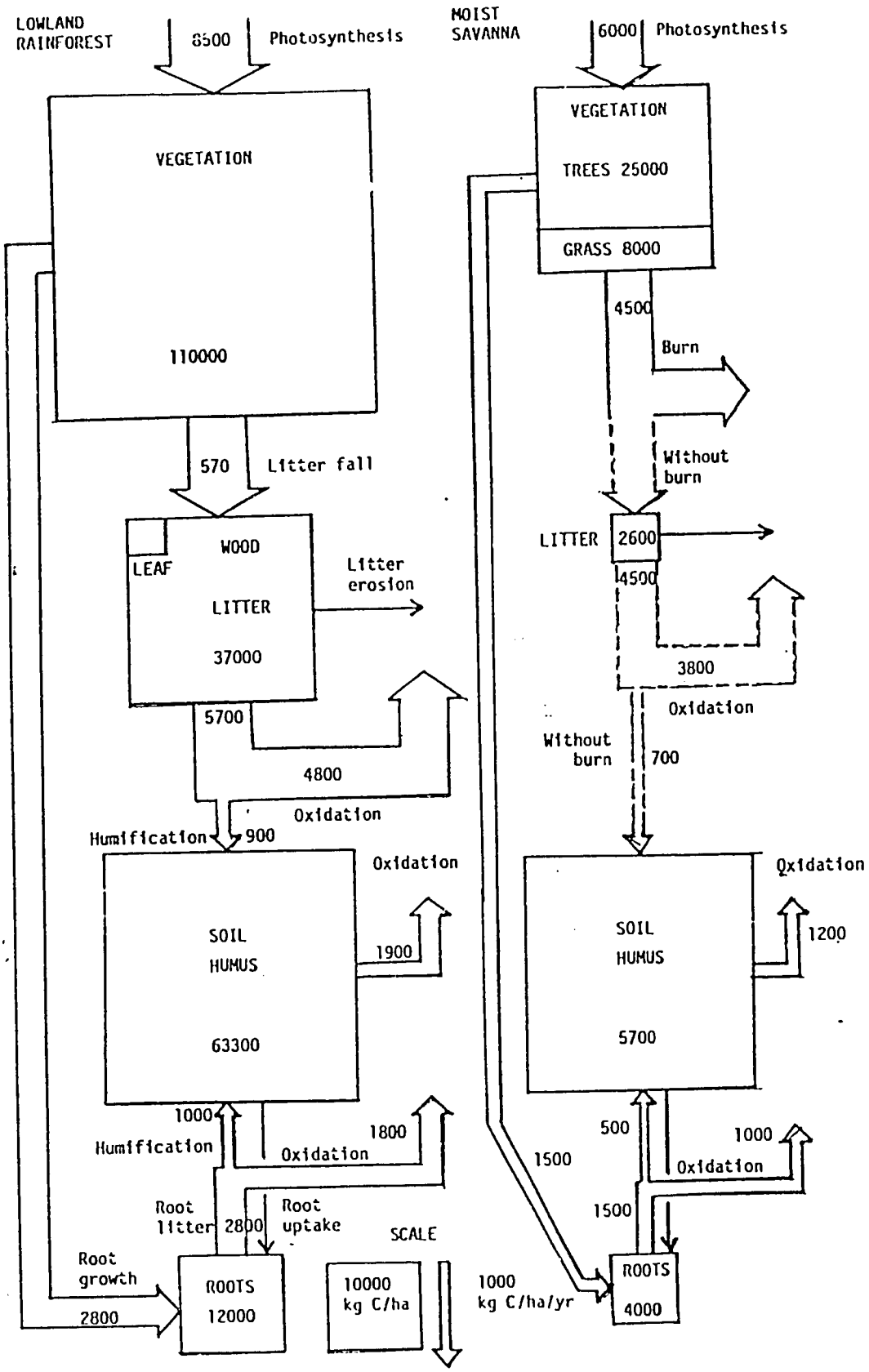

Figure ~~4~~ 5. The carbon cycle under natural vegetation.

Cf. Table 8. Source: Young (1976, p.111), based mainly on data in Nye and Greenland (1960).

equilibrium value of soil carbon, which is about 1.5-3.0 times the annual addition of plant litter; observed values, however, are very much higher, which leads to the presumption that a third fraction with a substantially slower rate of decay must exist. The third line of evidence comes from the decay of non-labelled carbon in the same experiments, that is, carbon already present in the soil at the start of the labelling experiment. This is lost much more slowly than the labelled carbon, at about 3% per year, the value which in earlier work was taken for the decomposition constant. This unlabelled carbon is assumed to comprise a mixture of recently-added and older material; to obtain the difference in rates between labelled (all recently-added) and non-labelled carbon, some of the older material must have a considerably slower rate of decay.

Combining these two approaches, it seems likely that the "conversion loss" in earlier work is equivalent to the fast-decay material in carbon-14 studies. That is, the organic material that is lost in six months or less consists of comminuted but not fully decomposed plant litter, which has not reached the stage of humus. This indicates the existence of at least three fractions of soil organic matter, of which only the second and third are humus:

- non-humified plant residues, with a half-life in tropical soils of less than 6 months; this may alternatively be treated as the litter-to-humus conversion loss;
- labile humus with a half-life in tropical soils of the order of 3 years;
- stable humus, capable of remaining in the soil for periods in excess of 50 years.

The non-humified material and the labile humus are likely to be the main contributors to nutrient release. It has been speculated that the stable humus contributes particularly to maintenance of soil physical properties but there is evidence neither for nor against this.

Proposals that have been made for the nature of the various fractions of plant litter and soil organic matter are shown in Table 9. The first two rows refer to non-humified material, the third to carbon during passage through soil fauna, and the remainder to humus.

4.2.3 Implications for agroforestry: specialized research

The orthodox view is that the slow-decay, stable fraction of humus originates from microbial transformation of the labile fraction, as metabolites. The maintenance of the stable fraction would then be dependent on a continuing supply of labile material, and degradation of the latter would result in a delayed and slower decline of the stable material.

An alternative possibility is that lignin-rich plant residues contribute directly to, or at least favour, the formation of the stable humus fraction. If this were so, then there is a management implication for agroforestry, namely that where possible, twigs and fine branches should be left to rot with leaf litter, and not removed for convenience of agricultural operations.

Table 9. Fractions of plant litter and soil organic matter. Fractions given in the same rows are not necessarily equivalent.

Jenkinson and Rayner (1977)	Rosswall (1984)	Coleman (1985)
Decomposable plant material	Labile plant litter	Structural plant carbon
Resistant plant material	Refractory plant litter	Metabolic plant carbon
Soil biomass	Microbial biomass and necromass, and metabolites	
Physically stabilized humus	Stabilized organic matter	Active soil carbon
		Slow soil carbon
Chemically stabilized humus	Old organic matter	Passive soil carbon

A more general hypothesis is that plant litter of differing quality (Section 4.6) contributes differentially to the properties and maintenance of soil humus. This is clearly the case with respect to rates of litter decay and consequent release of nutrients prior to humification. What is not known is whether a difference between retaining or removing woody residues has implications for the nature and maintenance of soil humus. Soil physical conditions are particularly favourable under natural forest ecosystems, where there is a balanced supply of herbaceous and woody residues. The potential of agroforestry to supply both kinds of residue is a point in its favour, in very general terms. A long-term experiment based on supplying soil plots with herbaceous residues only, woody residues only, and a mixture could shed light on this question.

Much of the above is a matter for soils research by institutions with special skills and facilities. Isotope-based work is conducted through a network linked to the Joint FAO/IAEA Division, Vienna (International Atomic Energy Agency), which has recently included agroforestry among its interests (IAEA, in press). Soil organic matter studies are central to the Tropical Soil Biology and Fertility programme (Swift, 1984, 1985).

Advances in knowledge in these specialized fields are of considerable potential significance to agroforestry.

4.2.4 A working hypothesis for soil monitoring in general agroforestry research

Most stations carrying out agroforestry research will neither wish, nor have the facilities, to carry out such specialized work. However, the monitoring of soil changes should form a part of most agroforestry experimental work, both tree/crop interface studies and trials of systems. For such studies a working hypothesis is needed that, whilst not ignoring the complexities of the subject, permits useful results to be obtained from standard methods of sampling and analysis.

We know very little about stable humus fraction, other than that it exists; it forms part of the organic carbon given by the Walkely-Black method of analysis, and the organic matter given by the method of ignition at 375°C. Its rate of oxidation loss is unknown, and it is affected by management, if at all, only slowly. What is of interest, for research into practical methods of soil fertility maintenance, is the labile fraction, which can be increased or reduced over periods of a few years by the supply of plant residues.

The humification of plant litter takes place at the soil surface or in the topsoil, the uppermost 15 to 30 cm where organic matter dominates the soil colour. This is where most soil biological activity (other than termites) is concentrated. It is reasonable to suppose that much of the humus present in the organic rich topsoil horizon is in labile form; and conversely, that the humus in the lower soil horizons, which does not prevail over the red to yellow colours of iron oxides, contains a proportionally greater amount of stable humus.

The simplification suggested as a matter of practical convenience is to treat all fully-humified carbon in the dark-coloured topsoil horizon as belonging to the labile fraction, with a decomposition constant of the order of 3-10%; and to focus attention mainly, although not exclusively, on soil organic matter changes in this horizon. The monitoring, perhaps at intervals of several years, of corresponding changes in lower horizons should allow approximate relations with topsoil changes to be established.

4.3 The organic matter cycle

4.3.1 Introduction

Under natural vegetation, the soil organic matter level is improved or maintained; under rainfed arable agriculture, it declines. The tree component in agroforestry has a capacity for biomass production at least as great as that of natural vegetation. The basic hypothesis to be considered is that it is possible to design agrosylvicultural systems in which the organic matter loss under the crop component is matched by a gain under the tree component. To be of practical use, such systems must also fulfil the needs of the land users, for food crops and other products.

One basis is the studies by ecologists of the plant/soil organic matter cycle under natural vegetation. A second is the experimental work on soil changes under continuous cropping or short fallows, much of it conducted with the aim of finding alternatives to shifting cultivation. These provide data which can be applied to the fundamental situation in agrosylvicultural systems, that of tree and crop components combined in space or time.

The cycle is discussed in terms of organic carbon, assumed to make up half of dry-matter plant material and 58% of soil organic matter. Data are given as kilogrammes per hectare or kilogrammes per hectare per year.

4.3.2 The cycle under natural vegetation

The foundation for modelling of organic matter cycling was provided by the classic study of Nye and Greenland (1960); this Section is largely based on the analysis of their data given in Young (1976). Other outstanding studies of natural vegetation are those of lowland rainforest by Bernhard-Reversat (1977, Bernhard-Reversat et al., 1975), Golley et al. (1975) and Jordan (1982); of highland forest by Lundgren (1978); and of both forest and savannas by Lelong et al. (1984). These later studies have confirmed the orders of magnitude for stores and flows of carbon established by Nye and Greenland.

Table 10 gives representative values for stores and flows of carbon for three ecological zones: humid, moist subhumid and dry subhumid (Section 1.4). The savanna data are subdivided according to whether it is burnt (with assumed loss of above-ground vegetation) or unburnt.

Table 10. Values in the carbon cycle under natural vegetation. Source: Young (1976, p.110), based mainly on data in Nye and Greenland (1960).

A. Stores of carbon (kg/ha)

		Lowland rainforest	Moist savanna	Dry savanna
Living vegetation:	trees	110000	25000	24000
	grasses	0	8000	4000
	roots	12000	4000	2000
Dead vegetation:	leaf litter	1000	600	300
	wood	36000	2000	2000
Total living vegetation		122000	37000	28000
Total dead vegetation		37000	2600	2300
Soil humus		63300	57000	17000
Total in plant-soil system		222300	96600	47300

B. Flows of carbon (kg/ha/yr)

	Lowland rainforest	Moist savanna		Dry savanna	
		Unburnt	Burnt	Unburnt	Burnt
Net intake from atmosphere	8500	6000		1700	
Loss in burning	0	0	4500	0	1200
Root growth	2800	1500		500	
Litter and timber fall	5700	4500	0	1200	0
Humification of litter	900	700	0	200	0
Oxidation loss in above	4800	3800	0	1000	0
Root exudation	2800	1500		500	
Humification of roots	1000	500		200	
Oxidation loss in above	1800	1000		300	
Total additions to soil humus	1900	1200	500	400	200

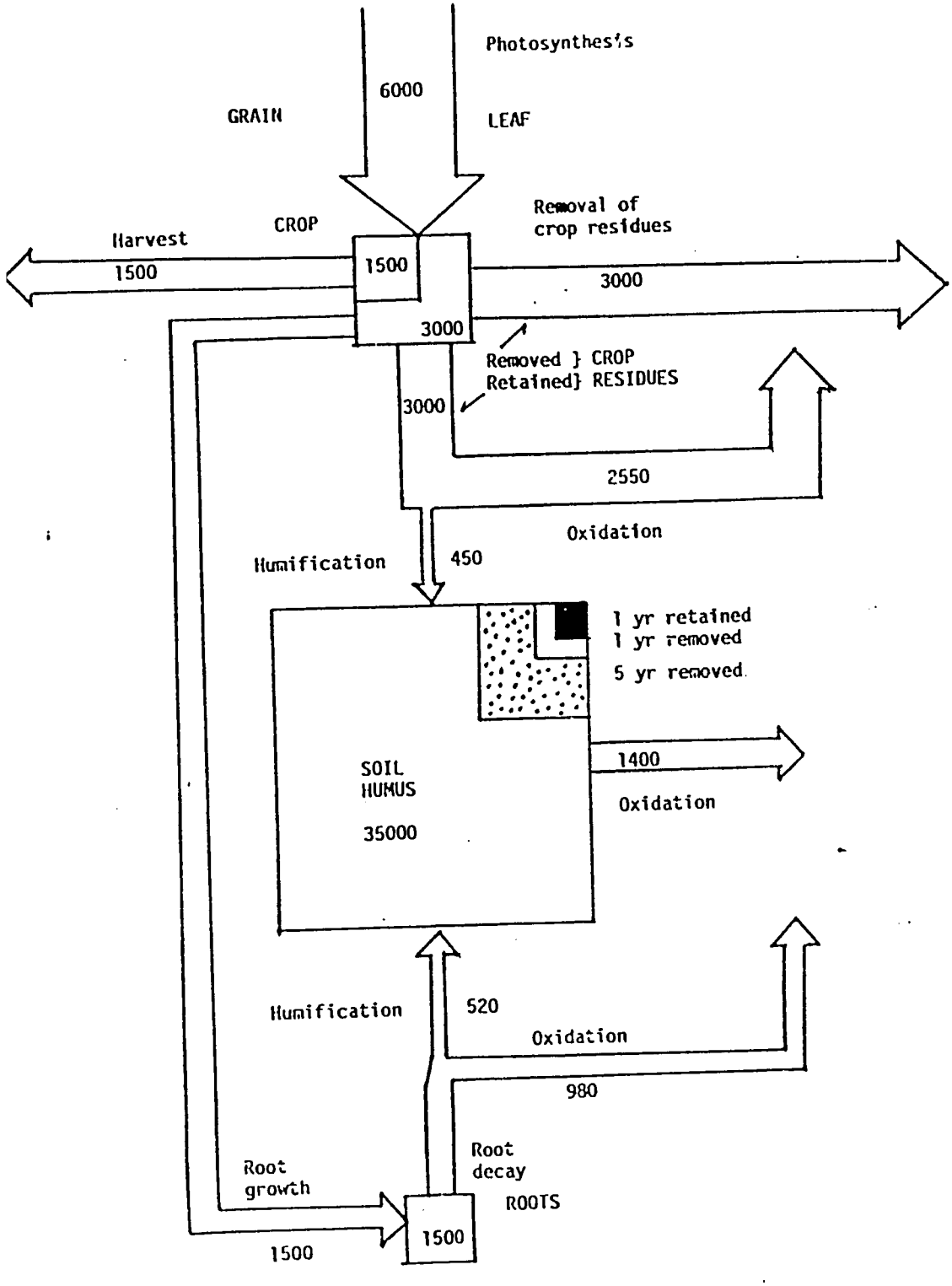

Figure 6. The carbon cycle under a cereal crop. Lowland humid zone, crop yield 3000 kg/ha. Values in kg C/ha and kg C/ha/yr. Shaded areas show net loss of soil carbon. Cf. Table 9.

The losses of carbon from the soil humus, through bacterial oxidation, are based on the concept of the decomposition constant. Its value under forest, Kf, is taken as 3% (0.03) and under cultivation, Kc, as 4%. The assumption of a decomposition constant provides a homeostatic mechanism whereby soil organic matter will tend towards an equilibrium value under constant inputs, however large or small these may be. This model takes no account of the existence of varying qualities of soil organic matter, with differing rates of breakdown.

Figure 5 gives the cycles for the rainforest and moist savanna conditions, showing the position under equilibrium conditions. Gains to soil humus equal losses, at 1900 kg/ha/yr in the forest environment and 1200 kg/ha/yr under savanna. The soil humus contents of 63 300 and 57 000 kg/ha/yr carbon respectively are equivalent, making a number of assumptions, to topsoil organic matter levels of 4.2% under forest and 3.8% under savanna.

4.3.3 The cycle under agriculture: continuous cropping

As a basis for discussing carbon flows under agriculture, one of these environments only is selected, that of rain forest. A cereal crop is assumed (typically maize), with two levels of grain yield: 1000 kg/ha, typical of low-input agriculture in developing countries, and 3000 kg/ha, representative of intermediate inputs or improved farming. For each yield level, two alternatives considered are that the crop residues are or are not returned to the soil.

Table 11 gives stores and flows of carbon for four conditions: low and moderate yields, each with removal or retention of residues. It is assumed that cultivation has already lowered soil humus to half its level under forest, 35 000 kg/ha carbon. The harvest index (grain as percent of above-ground biomass) is taken as 33%, and biomass of roots as 33% of the above-ground biomass. The same assumptions are made as in Table 8, namely that the split between humification and oxidation loss is 15:85 for crop residues and 33:67 for roots.

There is net loss of carbon from soil humus under all four sets of assumptions. Its level is lowered annually by about 1% of its initial level under the most favourable conditions and 3% under the least favourable. If such cropping were continued (avoiding erosion), the soil humus would reach equilibrium at levels shown in Part C of the table. On grounds of soil structure maintenance, erosion resistance, and retaining a nutrient source and retention medium, these levels are unacceptably low for the first three cases, and even in the most favourable case represent only one third of the level under natural forest.

The situation for moderate yields with residues removed is shown diagrammatically in Figure 6. As compared with the model under forest, the feature is the high proportion of total carbon in the plant-soil system that is contained in the soil store. Losses are shown by shaded boxes.

Table 11. Estimates of the carbon cycle under cereal crops. Low yield = 1000 kg/ha; moderate yield = 3000 kg/ha.

Yield:	Low		Moderate	
Crop residues:	Removed	Retained	Removed	Retained
A. Stores of carbon (kg/ha)				
Crop: grain	500	500	1500	1500
vegetative	1000	1000	3000	3000
roots	500	500	1500	1500
Soil humus (OM = 2.33%)	35000	35000	35000	35000
Plant-soil system	37000	37000	41000	41000
B. Flows of carbon (kg/ha/yr)				
From atmsosphere	2000	2000	6000	6000
Root growth	500	500	1500	1500
Harvest	500	500	500	1500
Crop residues, removed	1000	0	3000	0
" " retained	0	1000	0	3000
Humification of residues	0	150	0	450
Oxidation loss in above	0	850	0	2550
Root exudation	500	500	1500	1500
Humification of roots	170	170	520	520
Oxidation loss in above	330	330	980	980
Total additions to soil humus	170	320	520	970
Loss from soil humus humus (Kc = 4%)	1400	1400	1400	1400
Net change in soil humus	-1230	-1080	-880	-430
C. Equilibrium level of soil humus				
Carbon, kg/ha	4250	8000	13000	24250
Equivalent topsoil OM%	0.28	0.53	0.87	1.62

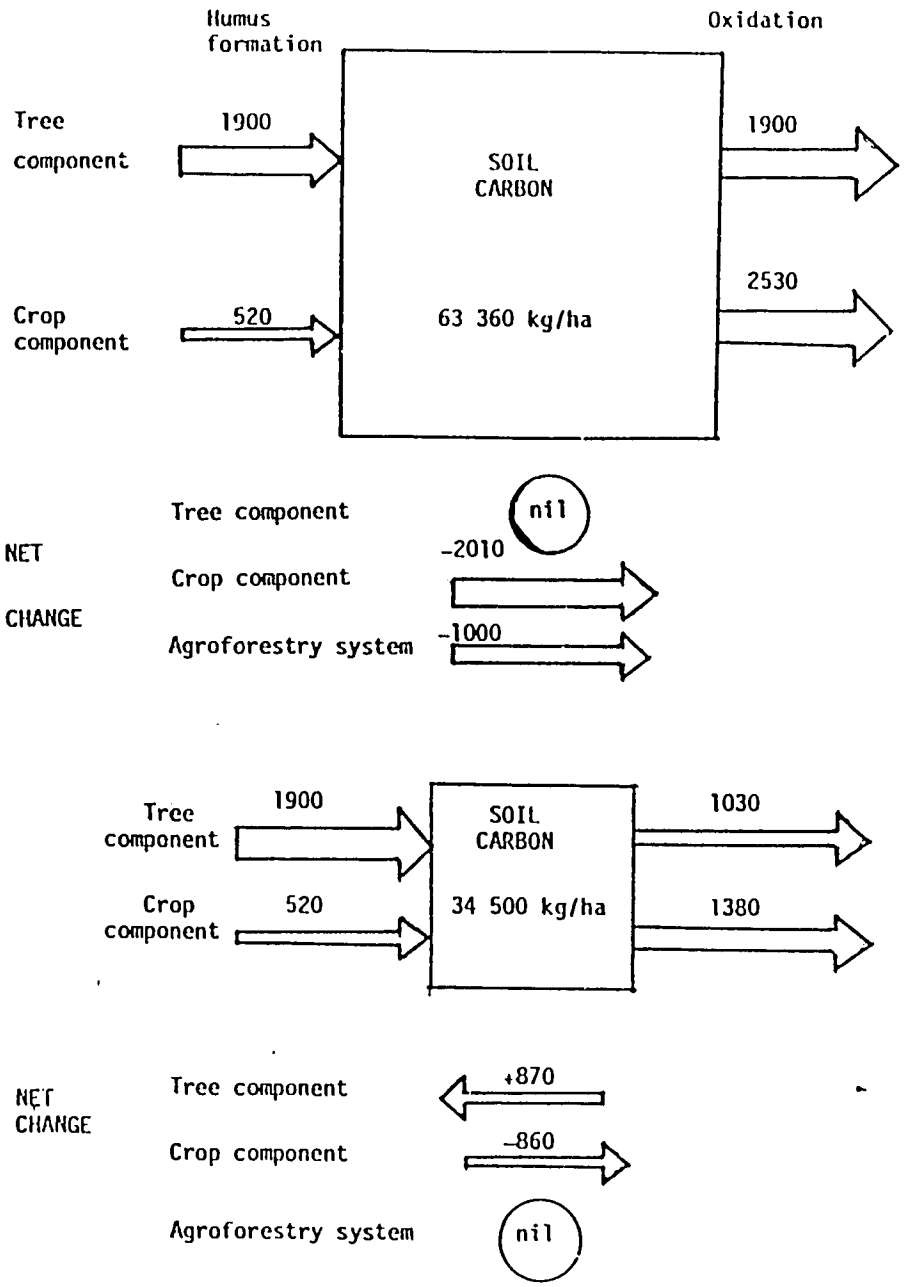

Figure ~~6~~ 7. Changes in soil carbon under agroforestry. Data and assumptions as for Figures 4 and 5.

Under continuous cropping, soil is being degraded at a substantial rate. This would reduce crop growth, so lowering the additions of plant residues and further accelerating the loss. Such a feedback between soil conditions and plant growth, leading to an accelerating rate of soil degradation and crop yield decline, can be demonstrated and the SCUAF computer model dissolved in Part III of this review (Young et al., 1987, pp. 60-61).

4.3.4 The cycle under a spatial agroforestry system

Taking the same data as in the above accounts of natural vegetation and continuous cropping, it is possible to construct a first approximation of the cycling of organic matter (represented by carbon) under a schematic agroforestry system.

The model is based on the following assumptions:

- a humid tropical (rain forest) environment;
- the planting of trees which have a rate of growth, and thus litter production, equal to that of a natural forest fallow;
- the assumptions, from Table 11, of a 'moderate' crop yield (3000 kg/ha grain), with crop residues removed.
- an agrosylvicultural system in which trees and crops each occupy 50% of the land.

This schematic cycle is applicable either to a spatial mixed agroforestry system or to a spatial zoned system in which, by one means or another, inputs and outputs of carbon become evenly distributed in space over a period of years. The effects are similar for a rotational tree/crop system, except that the curve of soil carbon against time has a toothed pattern.

In Figure 7, the upper diagram shows what happens when the forest is first cleared. Under the tree components, inputs and outputs of soil carbon are equal, at 1900 kg/ha/yr. Under the crop they are very unequal, leading to a rapid fall in soil humus level. The agroforestry system still leads to a combined loss of 1000 kg/ha/yr carbon.

The lower diagram shows the situation when soil carbon has reached 34 500 kg/ha. Inputs from tree and crop components are unchanged, but the assumption of the decomposition constant leads to approximate halving of the oxidation losses. Under the crop component there is still a net annual loss of 860 kg/ha carbon, but this is balanced by an equal net gain under the tree component. The agroforestry system as a whole---soil, soil organisms, tree, crop and environment---is stable. This equilibrium is reached with soil organic matter at slightly over half its natural level, a proportion generally taken to be acceptable in agriculture.

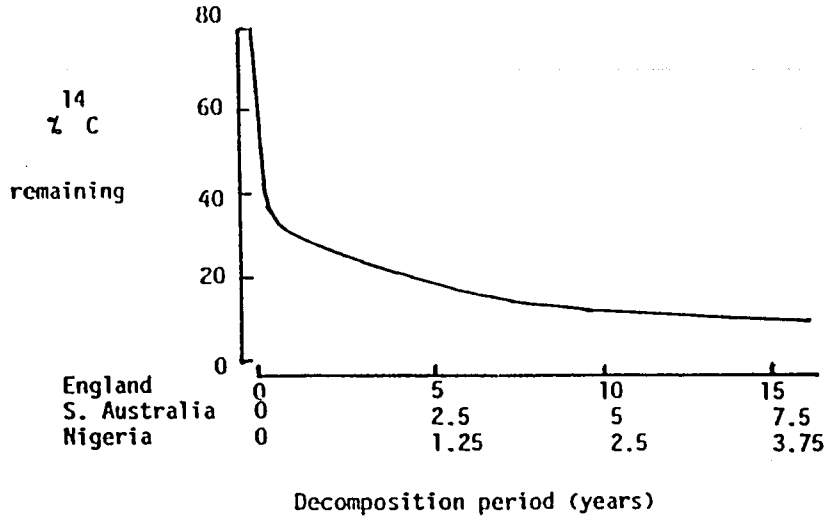

Figure 7. Decay curves for loss of carbon-14 labelled plant residues added to soil. After Ladd and Amato (1985).

The assumption of a 50:50 ratio between the tree and crop components is plausible for a spatial mixed system but not for most spatial zoned systems. However, this might be compensated by the higher rates of growth obtainable from the managed tree component in spatial systems. Thus, the equivalent result to the above would be obtained from a hedgerow intercropping system with 25% tree cover having a growth rate twice that of natural vegetation.

This result is exciting in the prospects which it opens up. It amounts to an hypothesis that, provided the assumptions can be verified, agroforestry systems can be designed that are productive in terms of agricultural crops, and at the same time lead to a steady state of soil organic matter.

4.4 Trees as producers of biomass

4.4.1 Natural vegetation

Measured rates of net primary production under natural ecosystems serve as a reference point for agroforestry in two ways. First, they indicate the relative biological productivity to be expected under different climates. Secondly, they would provide minimum values to be expected, if it could be assumed that under agroforestry, the combined effects of species selection and management will achieve higher rates of biomass production.

A summary of ranges and mean values is given in Table 12, the sources for which are compilations from primary data. The most representative value for rain forest is 20 000 kg/ha/yr (dry matter), ranging from half to over twice this value; semi-deciduous forest, under climates with a short dry season, is only slightly lower than evergreen forest in typical value, but does not attain the very high rates of some evergreen sites. Forest at high altitudes does not necessarily have slower growth; the typical value shown, 22 000 kg/ha/yr, is almost identical to that subsequently measured in Tanzania by Lundgren (1978).

Savanna communities show a wide range of productivity, differing between moist savanna, dominated by broadleaf species and occurring above some 1000 mm/yr rainfall, and dry savanna, dominated by narrow-leaved species. Representative values are 10 000 kg/ha/yr for moist savanna and 5000 for dry savanna. Communities described as desert scrub or the like range downwards from 2500 kg/ha/yr.

In summary, studies of natural ecosystems susggest the following rates of net primary production (above-ground dry matter) that can be expected according to climatic zone:

Humid tropics (no dry season)	20 000 kg/ha/yr or more
Humid tropics (short dry season)	20 000 kg/ha/yr
Subhumid tropics: moist	10 000 kg/ha/yr
dry	5 000 kg/ha/yr
Semi-arid zone	2 500 kg/ha/yr or less

Table 12. Biomass production of natural vegetation. Values refer to above-ground dry matter, kg/ha/yr. The sources are reviews, with substantial communality in primary data sources.

Vegetation community	Equivalent climate (Koeppen)	NPP, kg DM/ha/yr		Source
		Range	Mean or typical	
Evergreen rain forest	Af	10 000-35 000	28 000	Leith (1976)
			23 000	Leith and Whittaker (1975)
			23 000	Murphy (1975)
		22 000-32 000		Unesco (1978)
		10 000-50 000	20 000	Whittaker and Woodwell (1971)
			33 000	Rodin and Basilevic (1968)
Semi-deciduous rain forest	Am	16 000-25 000	17 500	Leith (1976)
			18 000	Leith and Whittaker (1975)
		13 000-17 000		Unesco (1978)
			21 000	Murphy (1975)
Montane ("cloud") rain forest	Cf, Cm		22 000	Leith and Whittaker (1976)
Savanna	Aw	2 000-29 000	8 000	Leith (1976)
			9 000	Leith and Whittaker (1975)
		2 000-20 000	7 000	Whittaker and Woodwell (1971)
Moist savanna	Aw	5 000-15 000	10 000	Murphy (1975)
			12 000	Rodin and Basilevic (1968)
Dry savanna	Aw	3 000-8 000	5 000	Murphy (1975)
			7 000	Rodin and Basilevic (1968)
Semi-desert vegetation	BS	100-2 500	700	Leith (1976)
			2 000	Rodin and Basilevic (1968)

4.4.2 Biomass production by trees used in agroforestry

Table 13A gives examples of measured biomass production by multipurpose trees, either grown in agroforestry systems or as plantations. These results are fragmentary, and will be considerably augmented in a few years by data from trials recently started.

Most of the rates shown do not exceed the baseline figures for natural vegetation under corresponding climates given above. Exceptions are two genera that have been the subject of breeding improvement programmes, Leucaena and Prosopis. Most other data range from net primary production rates typical of natural vegetation to half such values.

The alley cropping data refer to biomass production from the tree component in practical systems; for the Nigerian data, tree rows are spaced 4 m apart, and thus occupy perhaps 25% of the total ground area. If the crop net primary production of about 10 000 kg/ha/yr (from two crops) is added, the total biomass production of the system reaches some 15 000 kg/ha/yr. The site (at IITA, Ibadan) is close to the margin between moist subhumid and humid climates, so this rate is about what might be expected from natural ecosystems.

For a spatial mixed system, there are several studies studies of the plantation crop combinations common in Central and South America, coffee or cocoa with Cordia alliodora and/or Erythrina poeppigiana. The Cordia/Erythrina component alone typically supplies some 10 000 kg/ha/yr of biomass; in these systems the crop component is also a woody perennial, and if its biomass is added the total reaches some 15 000 kg/hr/yr.

Table 13B shows corresponding production of leaf (herbaceous) material only. Biomass is considerably lower, of the order of 2000-4000 kg/ha/yr for humid and subhumid climates. Values for leaf fodder production assembled in the ICRAF multipurpose tree and shrub data base are even lower, mostly a few hundred kilogrammes per hectare per year (von Carlowitz, 1986a, p. 311).

The partitioning of dry matter production between the four plant components, leaf (herbaceous), reproductive (fruit and flower), wood and root is a matter of considerable importance to agroforestry, since some of these components will be harvested, others returned to the soil. It not only depends on tree species, but is affected by environment and management; for example, nutrient stress decreases shoot (above-ground) growth relative to root growth, removal of fruit increases vegetative growth, whilst repeated removal of vegetative parts (as in pruning) decreases future vegetative growth. A review of dry matter partitioning in tree crops is given by Cannell (1985).

Table 13. Biomass production of trees used in agroforestry.

A. Above-ground net primary production (kg DM/ha/yr)

CLIMATE	COUNTRY	LAND USE	TREE	NPP	SOURCE
Humid	Malaysia	Plantation	Acacia mangium	18 000	Lim (1985)
Humid	Sarawak	Plantation	Acacia mangium	15 500 - 18 300	Tsai and Hazah (1985)
Humid	Philippines	Plantation	Albizia falcataria	11 300	Kawahara et al. (1981)
Humid	Costa Rica	Alley cropping	Calliandra calothyrsus	4 390	Baggio and Heuveldorp (1984)
Humid	Colombia	Plantation crop combination	Coffee + shade trees	4 600 - 13 000	Bornemisza (1982)
Humid	Mexico	Plantation crop combination	Coffee, Inga spp.	8 400 - 9 500	Jimenez and Martinez (1979)
Humid	Mexico	Plantation crop combination	Coffee, Inga spp., banana	10 250	Jimenez and Martinez (1979)
Humid	Costa Rica	Plantation crop combination	Erythrina poeppigiana	13 700 - 22 700	Russo and Budowski (1986)
Humid	Costa Rica	Plantation crop combination	Cordia alliodora	9 720	Alpizar et al. (1986-7)
			C. all. plus cacao	16 360	
			Erythrina poepiggiana	8 710	
			E. poepp. plus cacao	15 740	
Humid	Philippines	Plantation	Gmelina arborea	12 700	Kawahara et al. (1981)
Humid	Hawaii, etc.	Plantation	Leucaena leucocephala	20 000 - 30 000	Pound and Cairo (1983) (Q)
Moist subhumid bimodal	Nigeria	Alley cropping	Cassia siamea	7 390	Yamoah et al. (1986b)
Moist subhumid bimodal	Nigeria	Alley cropping	Flemingia congesta	2 370	Yamoah et al. (1986b)
Moist subhumid bimodal	Nigeria	Alley cropping	Gliricidia sepium	4 770	Sumberg (1986)
Moist subhumid bimodal	Nigeria	Alley cropping	Glicicidia sepium	5 410	Yamoah et al. (1986b)
Moist subhumid bimodal	Nigeria	Alley cropping	Leucaena leucocephala	6 770	Kang et al. (1985)
Subhumid bimodal	Sri Lanka	Alley cropping	Leucaena leucocephala	2 800	Weerakoon (1983)
Subhumid	India	Plantation	Leucaena leucocephala	38 200	Mishra et al. (1986)
Subhumid	Various	Plantation	Leucaena leucocephala	10 000 - 25 000	Pound and Cairo (1983) (Q)
Dry subhumid	India	Plantation	Prosopis juliflora	30 000	Gurumurti et al. (1984)
Arid	USA	Woodland	Prosopis glandulosa	3 700	Rundel et al. (1982)
Arid, irrigated	USA	Plantation	Four Prosopis spp.	7 000 - 14 500	Felker (1985)
Various	Nigeria/Brazil	Plantation	Gmelina arborea	9 300 - 24 900	Chijoke (1980)

B. Leaf production (kg DM/ha/yr)

Humid	Malaysia	Plantation	Acacia mangium	3 060	Lim (1985)
Humid	Philippines	Plantation	Albizia falcataria	180	Kawahara et al. (1981)
Humid	Costa Rica	Alley cropping	Calliandra calothyrsus	2 760	Baggio and Heuveldorp (1984)
Humid	Philippines	Plantation	Gmelina arborea	140	Kawahara et al. (1981)
Humid	Java	Plantation	L. leuco., Alb. falc., Dalb. Lat., Ac. auric.	3 000 - 5 000	Buck (1986)
Humid	Costa Rica	Plantation crop combination	Cordia alliodora	2 690	Alpizar et al. (1986-7)
			C. all. plus cacao	6 460	
			Erythrina poeppigiana	4 270	
			E. poepp. plus cacao	8 180	
Moist subhumid bimodal	Nigeria	Alley cropping	Cajanus cajan	4 100	Agboola (1982)
Moist subhumid bimodal	Nigeria	Alley cropping	Gliricidia sepium	2 300	Agboola (1982)
Moist subhumid bimodal	Nigeria	Alley cropping	Leucaena leucocephala	2 470	Agboola (1982)
Moist subhumid bimodal	Nigeria	Alley cropping	Tephrosia candida	3 070	Agboola (1982)
Subhumid	India	Plantation	Leucaena leucocephala	2 300	Mishra et al. (1986)

The estimated production of plant biomass, and proportion of this returned to the soil, must be estimated for any given site, agroforestry system, tree species and management. The above discussion can be summarized in general terms as follows:

i. The biomass production from the tree component in agroforestry systems can approach that under natural vegetation in the same climatic zone, and possibly exceed it for plant species which have been improved by selection or breeding.

ii. For the provision of biomass to maintain soil organic matter, critical aspects are first, the partitioning of biomass between different parts of the plant, and secondly, which of these plant parts reaches the soil as litter.

4.5 Plant residue requirements to maintain soil organic matter

Table 14 is an attempt to estimate, in highly generalized terms, the amounts of plant residues that need to be added to the soil in order to maintain soil organic matter, for three climatic zones of the tropics. The working hypothesis proposed in Section 4.2.4 is assumed, to consider only topsoil carbon and assume that this all belongs to the labile fraction. Values are obtained as follows:

Initial topsoil carbon and topsoil carbon percent Representative values for topsoil organic matter for the zone, under agricultural or agroforestry use, at levels commonly regarded as acceptable to maintain soil physical conditions; divided by 1.72 to give carbon.

Oxidation loss Assuming a decomposition constant of 0.04.

Erosion loss This will vary with site conditions from almost nil to high values. The assumption made is that erosion has been reduced to what is commonly regarded as an achievable rate, 10 t/ha/yr of soil. This is multiplied by the topsoil carbon, and by a carbon enrichment factor in eroded sediment of 2.0.

Required addition to soil humus The sum of oxidation and erosion losses.

Required plant residues added to the soil It is first assumed that roots equal 40% of above-ground net primary production (Section 7.1). The conversion loss is taken as 85% for above-ground residues and 67% for roots. Plant dry matter is assumed to be 50% carbon, and the results rounded to the nearest 100.

Since the roots are almost invariably added to the soil, the results can be treated in terms of above-ground biomass. To maintain organic matter, it is necessary that a land use system in the humid tropics should be such that something of the order of 8000 kg DM/ha/yr is added to the soil. Corresponding values for the subhumid and semi-arid zones are 4000 and 2000 kg DM/ha/yr.

Table 14. Indicative plant biomass requirements for maintenance of soil organic matter.

Climatic zone	Initial topsoil carbon (kg C/ha)	Topsoil carbon percent (%)	Oxidation loss (kg C/ha/yr)	Erosion loss (kg C/ha/yr)	Required addition to soil humus (kg C/ha/yr)	Required plant residues added to soil (kg DM/ha/yr)	
						Above-ground	Roots
Humid	30 000	2.0	1 200	400	1 600	8 400	5 800
Subhumid	15 000	1.0	600	200	800	4 200	2 900
Semi-arid	7 500	0.5	300	100	400	2 100	1 400

Comparison with Table 13 shows that these requirements can certainly be met if the total tree biomass is added to the soil, and still more readily if herbaceous crop residues are also added. If the woody component of the tree is harvested, achievement of the requirement becomes more difficult, and it is impossible if tree foliage and crop residues are also removed. The balance between additions and losses of soil humus carbon can be estimated for any given system, within a specified environment, by similar calculations; the computer model, SCUAF, described in Part III of this review, is an aid to the exploration of alternative possibilities.

4.6 Litter quality and decomposition

So long as the nutrients contained in plant litter are held as organic molecules, they are protected from leaching. When the litter decomposes, these nutrients are released to the soil solution. They then become available for uptake by plant roots, but at the same time, become subject to loss from the plant-soil system through leaching.

The concept of the quality of plant residues refers to their relative content of sugars, cellulose, hemicellulose, lignin and phenols, and the proportional content of nutrients. Litter of high quality (high in nutrients, low in lignin) decays and releases nutrients rapidly, that of low quality (high in lignin and/or phenols) decays slowly (Swift et al., 1978). Woody residues (stems, branches and twigs, coarse roots) are of low quality, but so also are some herbaceous products including straw.

It is apparent that the trees used in agroforestry vary widely in their quality and rates of decomposition. Leaves of *Leucaena* disappear within a few weeks, those of *Cassia siamea* at an intermediate rate, whilst *Gmelina arborea*, *Acacia mangium* and many *Eucalyptus* species are relatively slow-decaying. For example, *Leucaena*, *Gliricidia* and *Cassia* prunings release most nitrogen within 60 days of application to the soil. *Leucaena* decomposes mainly within 40 days, more rapidly if applied fresh than dry, and if buried than applied to the surface (Yamoah et al., 1986a; Wilson et al., 1986). The straw from crop residues takes several months to become humified, and coarse woody residues longer still.

The rate of litter decomposition is expressed in terms of the litter decomposition constant, Klit (commonly expressed as "k" but here designated Klit to distinguish it from the decomposition constant for soil humus). The rate of change in accumulated surface litter, dL/dt, is given by:

$$dL/dt = A - Klit.L$$

where A = annual litter additions and L = accumulated surface litter. If Klit, <1.0 then the mean residence time of litter on the ground surface is less than one year. This is the case for most natural ecosystems in the tropics.

The decomposition constant for a given plant species on a site is relatively easily measured by the litter-bag technique (Anderson and Ingram in press). This should become a normal element in agroforestry research, leading to establishment of decomposition constants for common tree species within given environmental conditions, in particular with respect to the major climatic zones.

Knowledge of the rates of litter decomposition offers opportunities to manipulate the timing of nutrient release. Annual crops vary in their nutrient requirements during the growing season. It is therefore beneficial if the release of nutrients from litter decay can take place at the same time as uptake requirements of crops. In this way, the ratio between plant uptake and leaching loss will be increased, thereby making the plant-soil system more closed. The concept that nutrient release and requirements for uptake can be synchronized, to some degree, through management, forms one of the basic hypotheses of the Tropical Soil Biology and Fertility programme (the synchrony or "SYNCH" hypothesis) (Swift, 1984, 1985).

This is one reason for the success of combinations of Leucaena, Gliricidia, Flemingia and Cassia with maize. Nitrogen release from prunings is well-synchronized with nitrogen uptake by maize; if prunings are applied at time of germination, uptake surpasses release after 40-50 days (Yamoah et al., 1986a). For annual cropping systems, tree species with a high quality of leaf litter appear desirable, not only because of the higher nutrient content but also because its release synchronizes well with crop uptake requirements.

Agroforestry systems differ from natural plant communities first, in that there is some degree of selection of plant species, and secondly, that the tree and crop components are managed, e.g. by pruning and harvesting. Hence many agroforestry systems offer opportunities to manipulate the timing of litter decay and nutrient release. This can be achieved through:

i. selection of plant species, with differing rates of litter decomposition;

ii. manipulating the timing of litter addition to the soil, through adjustments in the timing of pruning or other tree-cutting operations;

iii. controlling the manner of litter addition, i.e. left on the ground surface or buried.

Tree species selection is influenced by a variety of considerations, whilst the timing of pruning is often determined by the need to reduce shading to young crops. However, once basic knowledge on the timing of litter decomposition has become available, there will often be opportunity to modify one or more of the three features listed above so as to synchronize nutrient release with plant requirements, thereby increasing plant uptake relative to leaching loss and so achieving a more closed plant-soil nutrient cycle.

5 PLANT NUTRIENTS

5.1 Nitrogen

5.1.1 The nitrogen cycle

Of the plant nutrients, nitrogen is that which is most often the limiting factor on crop yields in the tropics; there is nearly always a substantial initial response to nitrogen fertilizer application. At the same time, nitrogen-fixing trees and shrubs offer a means of increasing the input of nitrogen to the plant-soil system. Hence there is a clear opportunity to improve yields of associated crops in agroforestry systems by this means.

A basis for discussion of the potential of agroforestry is the considerable volume of published work on the nitrogen cycle under agriculture. The most comprehensive basic text is Stevenson (1986). A review of N-cycling models is given in Frissel and van Veen (1982). For tropical agricultural systems, much material is contained in four symposia on nitrogen cycling, for West Africa (Rosswall, 1980), South-east Asia (Wetselaar et al., 1981), Latin America (Robertson et al., 1982) and the tropics in general (Kang and van der Heide, 1985). For agroforestry, the starting point is the review by Nair (1984, pp. 35-40).

Figure 8A represents the nitrogen cycle adapted to the basic situation in agroforestry, that of tree and crop components. The main internal cycle is from the plant components to plant residues, via soil fauna to soil humus, through the process of mineralization to soil mineral nitrogen, and then via root uptake back to the plants. Gains and losses external to the plant-soil ecosystem are:

Gains	Losses
Symbiotic fixation	Harvest
Non-symbiotic fixation	Burning
Rain and dust	Gaseous losses (denitrification and volatilization)
Fertilizer	Leaching
Organic material from outside system	Erosion

A key feature is that a high proportion of N present in the soil at any one time is held in organic form, only something of the order of 1% being mineral N at any one time. Once mineralized, the N becomes available for plant root uptake, but at the same time, highly subject to leaching. Hence under agricultural systems the cycle is relatively open, with large losses through leaching; as a consequence, the soil store declines, unless compensated by inputs through symbiotic fixation or fertilizer.

Figure 8B shows the same cycle in simplified form, emphasising the main features. The focal point is the store of soil mineral nitrogen, small in size and with a rapid turnover. It is available for uptake by

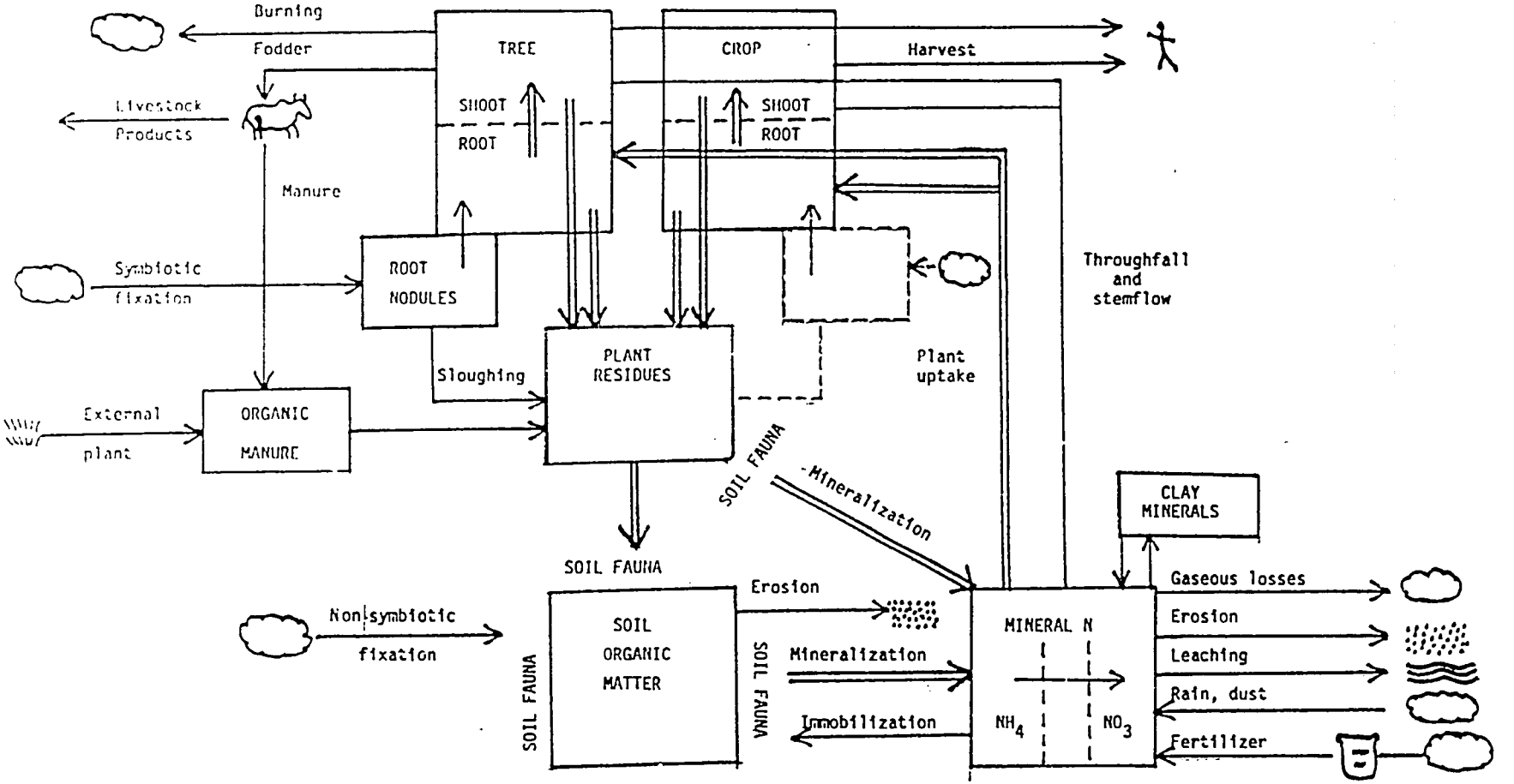

Figure 8A. The nitrogen cycle in agroforestry.

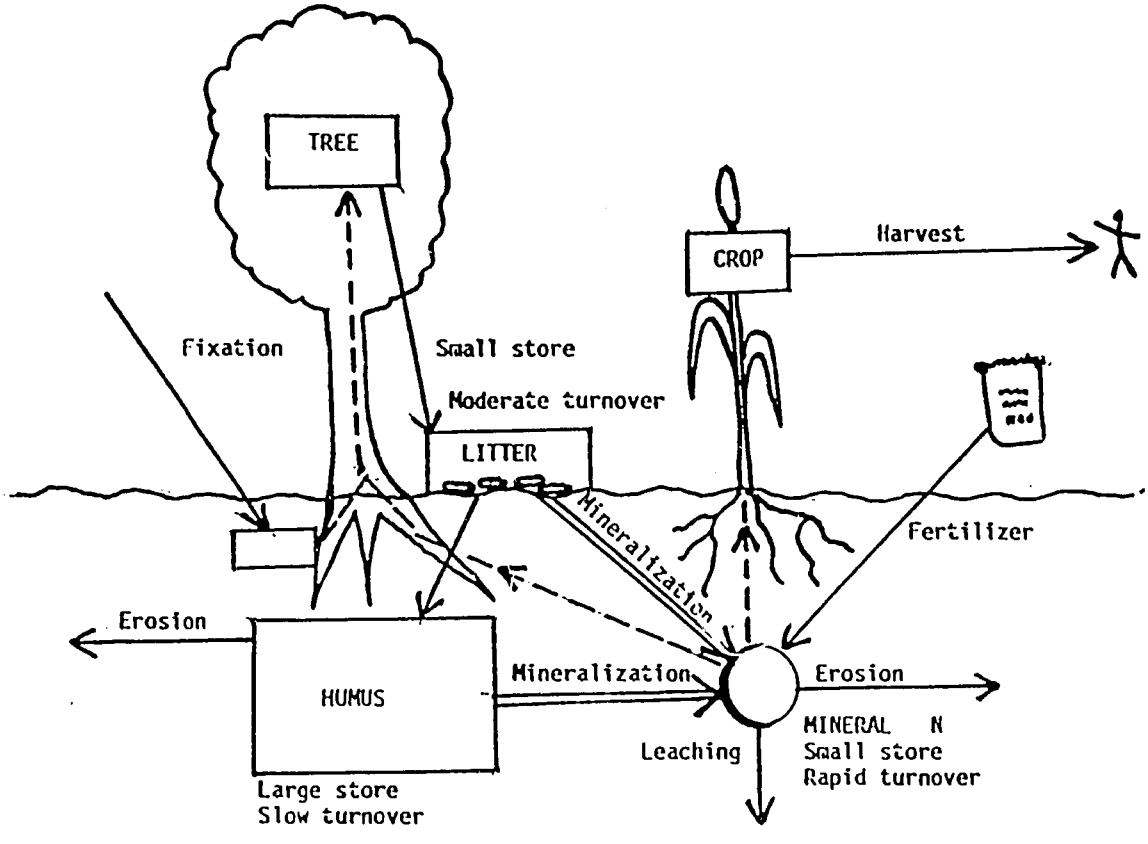

Figure 8B. The nitrogen cycle in agroforestry.
Simplified, showing main stores and flows.

plants but at the same time subject to losses by leaching and erosion (in solution in runoff water). There are three main sources of supply to this store:

1. Plant residues; derived in turn from two sources, symbiotic fixation and recycling of mineral nitrogen; small in size but renewed, annually at the start of the rains in seasonal climates, continually in constantly humid climates.

2. Soil humus: derived from plant residues; large in size, with gradual release.

3. Fertilizer, if applied.

The distinctive opportunities which agroforestry systems offer for modifying this cycle are:

i. To increase the gains from symbiotic fixation, through use of N-fixing trees and shrubs.

ii. To increase internal cycling, where one or more parts of the tree component (leaf, fruit, wood, root) are returned to the soil. This may occur directly, as leaf fall, prunings, and throughfall and stemflow; or indirectly, via the feeding of leaves and fruit to livestock and partial return of nitrogen as manure.

iii. To increase the efficiency of plant uptake by controlling, through management, the timing of litter additions to the soil and thereby the timing of nitrogen mineralization (Section 4.6).

iv. To maintain soil humus, and thereby the nitrogen supply from its mineralization.

v. To reduce the losses from erosion.

5.1.2 Nitrogen fixation by trees and shrubs

Biological nitrogen fixation takes place through non-symbiotic and symbiotic means. Non-symbiotic fixation is N-fixation by free-living soil organisms. It can be of substantial importance relative to the modest requirements of natural ecosystems, but is small in relation to the greater demands of agricultural systems. Presumably it varies with the organic matter status, and therefore microbiological activity, of the soil.

Symbiotic fixation occurs through the association of plant roots with N-fixing bacteria. Many legumes are associated with *Rhizobium*, whilst a few non-leguminous species are associated with *Frankia*. These symbioses occur in association with soil fungi which infect roots to form mycorrhizae (von Carlowitz, 1986a, p. 243).

Table 15. Nitrogen fixation by trees and shrubs.
Nair (1984) and Dommergues (1987) are compilations from primary sources.

Species	N fixation (kg N/ha/yr)	Source
Acacia albida	20	Nair (1984)
Acacia mearnsii	200	Dommergues (1987)
Allocasuarina littoralis	220 (?)	Dommergues (1987)
Casuarina equisetifolia	60-110	Dommergues (1987)
Coffee + Inga spp.	35	Roskoski and van Kessel (1985)
Coriaria arborea	190	Dommergues (1987)
Erythrina poeppigiana	60	Dommergues (1987)
Gliricidia sepium	13	Dommergues (1987)
Inga jinicuil	35-40	Dommergues (1987
Inga jinicuil	50	Roskoski (1982)
Inga jinicuil	35	Roskoski and van Kessel (1985)
Leucaena leucocephala	100-500	Dommergues (1987)
Leucaena (in alley cropping)	75-120	Mulongoy (1986)
Prosopis glandulosa	25-30	Rundel et al. (1982)
Prosopis tamarugo	200	Nair (1984)
Rain forest fallow	40-100	Greenland (1986)
Mature rain forest	16	Jordan et al. (1982)

Nitrogen fixation by herbaceous legumes has long been a recognized agricultural practice, either as a productive crop (e.g. pulses, groundnuts), a green manure crop (e.g. Stylosantheses spp., Centrasema pubescens) including grass-legume leys, or a cover crop in perennial plantations (e.g. Pueraria phasioloides). Typical rates of N fixation for herbaceous legumes are in the range 40-200 kg N/ha/yr (Nutman, 1976; LaRue and Patterson, 1981; Gibson et al., 1982).

Table 15 gives reported rates of nitrogen fixation by trees and shrubs. These are very approximate, as there are problems in all the three methods of measurement: N difference, acetylene reduction and 15-N labelling (Dommergues, 1987, p. 262). Most data refer to the tree in a pure stand, but that for coffee with Inga and alley cropping with Leuceana are for the cultivation in spatial mixed and zoned agroforestry systems respectively. The range is largely 20-200 kg N/ha/yr, with Leucaena alone capable of higher values under favourable climatic and soil conditions. There is a need for more data, but it is at least a plausible hypothesis that trees and shrubs can be identified which, grown in agroforestry systems, will be capable of fixing of the order of 50-100 kg N/ha/yr.

Sources for the selection of N-fixing trees and shrubs are the data base of the Nitrogen Fixing Tree Association (NIFTAL project, 1984) and the ICRAF multipurpose tree and shrub inventory. From either of these sources, a search can be made on criteria of climatic zone, rainfall, temperature/altitude, soil limitations, phenology and uses. Lists of the better known or economically important species are given in MacDicken and Brewbaker (1984) and von Carlowitz (1986, Table 3, species marked NF). Non-leguminous nodulating species are given in Bond (1976).

5.1.3 Nitrogen cycling in agroforestry systems

Table 16 shows data on the nitrogen content of litter fall and prunings for agroforestry systems, with some natural vegetation communities for comparison. The agroforestry data are for humid and moist subhumid climates. Under hedgerow intercropping systems, a number of species are known which are capable of supplying 100-200 kg N/ha/yr if all prunings are left on the soil; this is of the same magnitude as nitrogen removal in the crop harvest. Under coffee and cocoa plantations with shade trees (partly N-fixing) in Latin America the return in litter and prunings is some 100-300 kg N/ha/yr. This is much higher than the quantities originating from N-fixation. An example of stores and annual flows of nitrogen in a coffee-Erythrina-Inga system is shown in Figure 9.

In the hedgerow intercropping study, the return to the soil in prunings is of the same magnitude as removals in harvest in intercropped cereals and legumes. For the fertilized plantation crops, the litter nitrogen exceeds removal in harvest.

There are no data for rotational agroforestry systems. The starting point must be the studies of soil changes under shifting cultivation (e.g. Jordan et al., 1983; Toky and Ramakrishnan, 1983; Andriesse and

Table 16. Nitrogen in litter fall and prunings.

Country	Subhumid	Land use	kg N/ha/yr	Source
Nigeria	Subhumid	Alley cropping, 4 m rows, prunings:		Kang and Duguma (1985)
		Leucaena leucocephala	200	
		Gliricidia sepium	100	
Venezuela	Subhumid	Coffee-Erythrina-Inga unfertilized:		Aranguren et al. (1982)
		trees only	86	
		trees + coffee	172	
		Cacao Erythrina-Inga unfertilized:		
		trees only	175	
		trees + cacao	321	
Costa Rica	Humid	Cacao-Cordia alliodora (fertilized)	115	Alpizar et al. (1986-7)
		Cocao-Erythrina poeppigiana (fertilized)	175	
Various	Humid	Rain forest	60-220	Bartholemew (1977)
18 sites	Humid	Forest	Mean 134	Lundgren (1978)
Ivory Coast	Humid	Rain forest	113, 170	Bernhard-Reversat (1977)
Brazil	Humid	Rain forest	61	Jordan et al. (1982)
US: Calif.	Arid	Prosopis glandulosa (woodland)	45	Rundel et al. (1982)

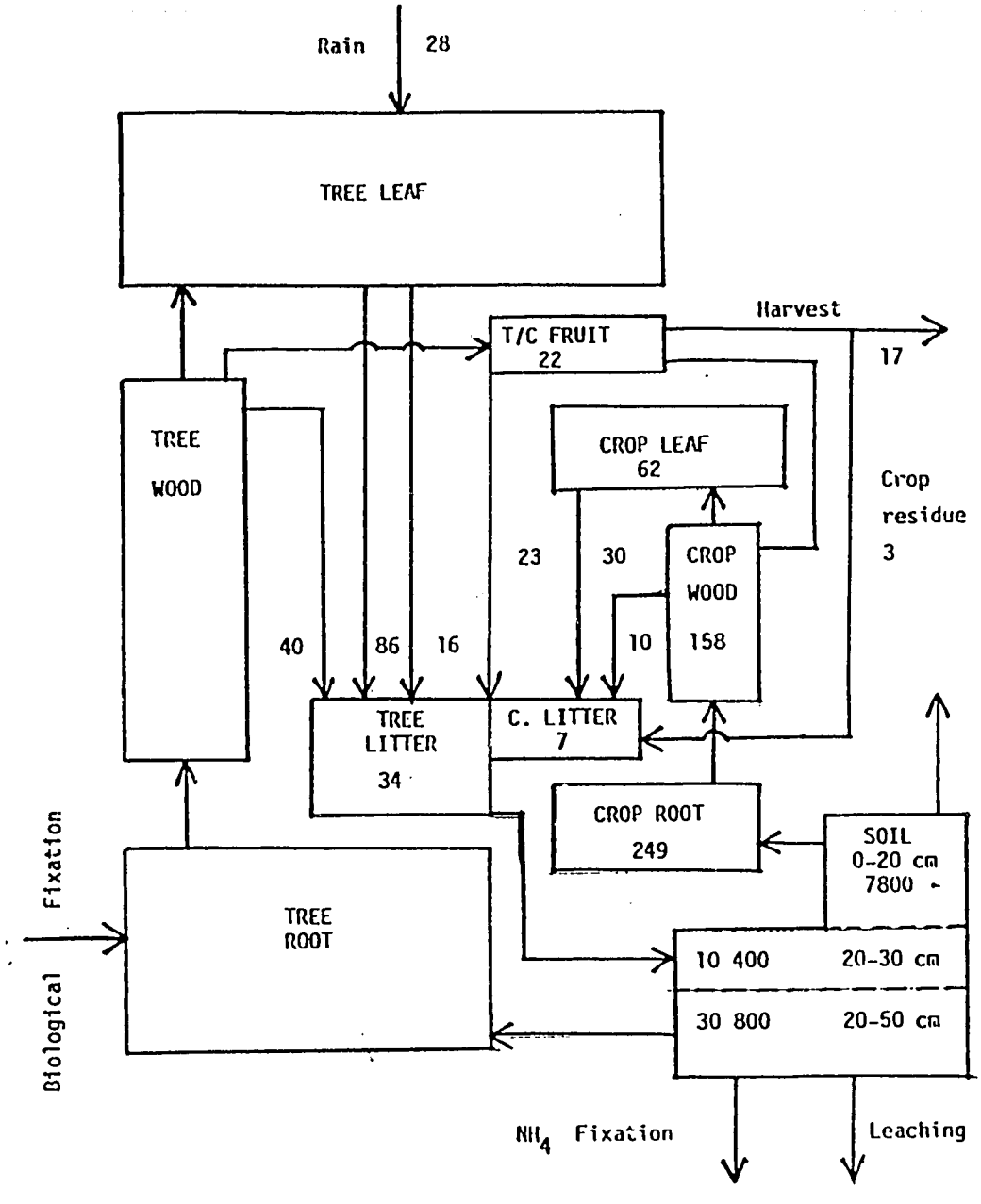

Figure 9. The nitrogen cycle under a coffee-Erythrina-Inga system. Subhumid climate, Venezuela. After Aranguren et al. (1982).

Koopmans, 1984; Andriesse and Schelhaas, 1985; and the review by Nair, 1984). The major inefficiency in shifting cultivation is that most of the nitrogen that builds up in the ecosystem during the fallow period is in the vegetation, and this is largely lost on burning.

It is important to distinguish between nitrogen fixation, an input to the plant-soil system, and nitrogen addition to the soil in litter or prunings, which is an internal transfer. Much of the nitrogen in litter has been taken up from the soil, originating either as fertilizer input or stored soil reserves.

Thus there are two distinct questions:

i. How much nitrogen is fixed by the tree component?

ii. What is the contribution of the tree component to a more efficient supply, to the crop, of the nitrogen stored in the soil or added as fertilizer?

These questions must be answered by nitrogen balance studies, taking into consideration all inputs and outputs to the plant-soil system, and internal flows. Data for atmospheric input, non-symbiotic fixation, gaseous losses and leaching will frequently not be obtained in non-specialized agroforestry trials, and must be estimated by comparison with specialized studies from similar environmental conditions.

It is impossible to answer these questions until data are available, for a range of agroforestry systems and under different environments. The need is for quantitative determinations of the nitrogen balance, covering plant and soil stores, inputs, outputs and within-system transfers, along the lines of the comprehensive studies available for natural vegetation (e.g. Bernhard-Reversat, 1977, 1982; Jordan, 1982; Rundel et al., 1982) and agricultural systems (e.g. Frissel, 1977; Pushparajah, 1981; Pieri, 1985; Idessa et al., 1985; Agamuthu and Broughton, 1985).

5.2 Other nutrients

5.2.1 General

Figure 10 shows the nutrient cycle that applies to the other major nutrients, phosphorus and potassium, the secondary nutrients, calcium, magnesium and sulphur, and the micronutrients. The nutrient stores are the same as for the nitrogen cycle: tree and crop shoots and roots, plant residues, soil fauna, labile and stable soil organic matter, nutrients fixed in secondary clay minerals, and the store of available nutrients in mineral form in the soil solution. Most of the internal flows are also similar to the nitrogen cycle, including the basic cycle plant-litter-soil fauna-soil organic matter-soil mineral solution and thence to plant, with losses by leaching, erosion and fixation. For nutrients other than sulphur, differences from the nitrogen cycle are as follows:

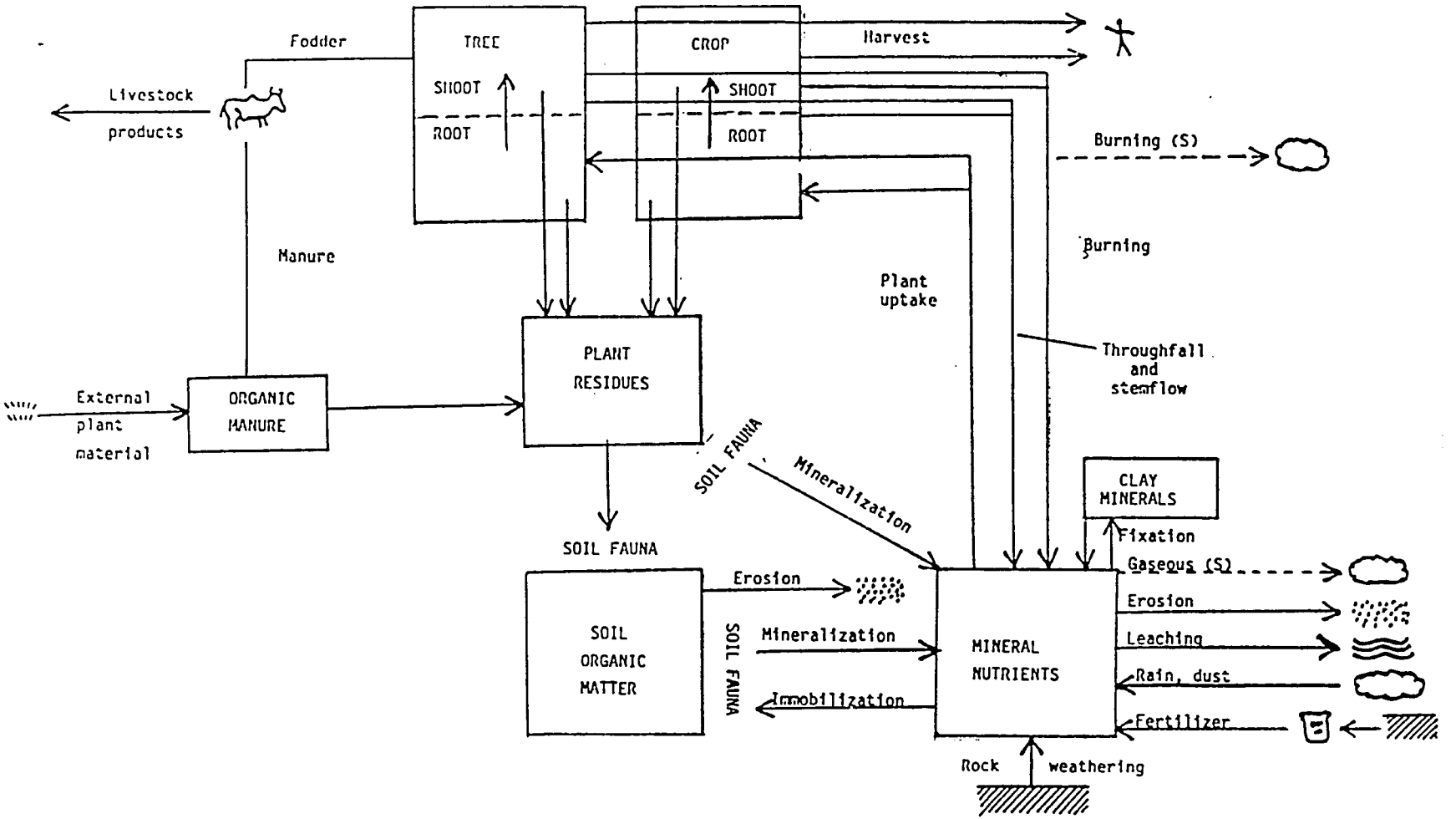

Figure 10. The nutrient cycle in agroforestry for nutrients other than nitrogen.

i. The minerals originate from weathering of rock minerals. An input from this source replaces the fixation inputs in the nitrogen cycle.

ii. There are no gaseous losses.

iii. Where burning occurs, the greater part of the nutrients contained in plant tissues is transferred to the soil mineral store.

The sulphur cycle has in common the initial input by rock weathering, but there is a volatilization loss and, as with nitrogen, sulphur in plant tissues is largely lost on burning.

All nutrients are liable to leaching loss from the mineral store in the soil solution, and to losses in erosion both from the organic matter store and as dissolved minerals in runoff water. Immobilization by fixation of nutrients in secondary clay minerals is of greater relative importance in the cycles of phosphorus and some of the micronutrients.

A feature of significance for agroforestry is the different mechanism for increasing inputs to the plant-soil system. For nitrogen, this is achieved by symbiotic fixation. For other nutrients, the equivalent process is uptake from rock weathering. The hypothesis is that deeply-rooting trees have the capacity to take up minerals from the deeper soil horizons, which under agricultural systems would be lost by leaching before reaching the plant. Most weathering of primary rock minerals in tropical soils takes place in the lower horizons; when describing a soil profile, it is very common to find that weatherable minerals are rare or absent in the uppermost 1-2 m, becoming common in the B/C horizon where remnants of weathering rock can be observed. This hypothesis is therefore plausible, but unproven.

Thus the potential contributions of the tree component to improvements to nutrient cycling, as compared with annual-crop agricultural systems, are:

i. To enhance uptake of minerals released by rock weathering.

ii. To lead to more closed nutrient cycling, by improving the ratio between uptake by plant roots and loss in leaching.

iii. To contribute an added element of nutrients in plant litter, where tree residues are returned to the soil (directly or via animals).

iv. To improve the ratio between unavailable (fixed) minerals and those available for plant uptake through release from organic compounds in decomposing tree residues.

v. Through organic residues, to assist in providing a balanced nutrient supply, possibly with avoidance of micronutrient deficiencies.

5.2.2 Nutrient cycling in agroforestry

Table 17 shows some data on the nutrient content of plant parts in some trees used in agroforestry systems. If the leaf component is returned to the soil, then a typical value for tree leaf biomass production of 4000 kg DM/ha/yr gives the following values:

Nutrient	% in leaf	Potential nutrient return in leaf litter or prunings (kg/ha/yr)
P	0.2 - 0.3	8 - 12
K	1.0 - 3.0	40 - 120
Ca	0.5 - 1.5	20 - 60

The amounts in the last column are in every case substantial in relation to the nutrient requirements of annual crops.

Data on dry matter yield in Leucaena prunings on alley cropping trials at Ibadan, multiplied by percentage nutrient content, give an annual return to the soil of about:

6000 kg DM/ha/yr x 0.28% P = 16.8 kg P/ha/yr
" x 2.50% K = 150.0 kg K/ha/yr
" x 1.49% Ca = 98.4 kg Ca/ha/yr

(Kang et al., 1985; Wilson et al., 1986)

Measurement and analyses of litter (leaf and branch) in cacao-Cordia and cacao-Erythrina systems in Costa Rica give annual returns to the soil of:

Cacao-Cordia: 13.9 kg P/ha/yr of which 5.7 from Cordia
65.5 kg K/ha/yr of which 35.3 from Erythrina
Cacao-Erythrina: 8.8 kg P/ha/yr of which 7.1 from Cordia
53.6 kg P/ha/yr of which 27.0 from Erythrina

(Alpizar et al., 1986-7)

Features of the nutrient cycle under natural vegetation are relevant, as representing the "tree-only" end of a tree-crop spectrum. Figure 11 shows the phosphorus cycle as determined in a study of tropical rain forest in Panama. The amount of P that is cycling is only 6.6% of that in the soil and vegetation stores: 9.1 kg P/ha/yr is contained in litter, 11.8 if throughfall and animal remains are added, and there is a plant uptake of 11.0, compared with stores of 144 kg P/ha in the vegetation and a further 22 in the soil. The striking feature is the

Table 17. Nutrient content of trees used in agroforestry. (Kang et al. (1984) and Buck (1986) are secondary sources.

Tree	Nitrogen %	Nitrogen kg/ha/yr	Phosphorus %	Phosphorus kg/ha/yr	Potassium %	Potassium kg/ha/yr	Calcium %	Calcium kg/ha/yr	SOURCE
Acacia auriculiformis	L 1.63								Buck (1986)
Acioa barteri	L 2.57		L 0.16		L 1.78		L 0.90		Kang et al. (1984)
Acioa barteri	L 2.57		L 0.16		L 1.78		L 0.90		Wilson and Kang (1986)
Albizzia falcataria	L 2.2[illegible]								Buck (1986) (Q)
Alchornia cordifolia	L 3.29		L 0.23		L 1.74		L 0.46		Kang et al. (1984)
Alchornia cordifolia	L 3.29		L 0.23		L 1.74		L 0.46		Wilson and Kang (1986)
Cajanus cajan	L 3.6	L 151	L 0.2	L 9					Agboola (1982)
Cassia siamea	PR 2.52	186	PR 0.27	20	PR 1.35	100			Yamoah et al. (1986)
Coffea arabica	L 1.6; F 1.5								Aranguren et al. (1982)
Coffee + shade trees	W 0.5								Bornemisza (1982)
Dalbergia latifolia	L 1.78								Buck (1986)
Erythrina poeppigiana	L 3.3; BR 0.84	330	L 0.18;BR 0.13	32	L 1.16;BR 0.60	156	L 1.52; BR 1.15	319	Russo and Budowski (1986)
Erythrina sp.	L 1.52; W 0.9								Aranguren et al. (1982)
Ficus sp.	L 1.41; W 0.8								Aranguren et al. (1982)
Flemingia congesta	PR 3.30	78	PR 0.34		PR 2.41	57			Yamoah et al. (1986)
Gliricidia sepium	L 3.7	L 84	L 0.2	L 4					Agboola (1982)
Gliricidia sepium	L 4.21		L 0.29		L 3.43		L 1.40		Kang et al. (1984)
Gliricidia sepium	L 4.21		L 0.29		L 3.43		L 1.40		Wilson and Kang (1986)
Gliricidia sepium	PR 4.40	238	PR 0.26	14	PR 2.81	152			Yamoah et al. (1986)
Gmelina arborea	L 2.07; W 0.22		L 0.23; W 0.03		L 1.16; W 0.37		L 0.57; W 0.19		Chijoke (1980)
Inga sp.	L 1.61; W 2.28								Aranguren et al. (1982)
Leucaena leucocephala	L 4.2	L 105	L 0.2	L 4					Agboola (1982)
Leucaena leucocephala	L 2.51								Buck (1986)
Leucaena leucocephala	L 4.33		L 0.28		L 2.50		L 1.49		Kang et al. (1984)
Leucaena leucocephala			PR 0.3		PR 1.0		PR 2.5: L 3.0		Akbar and Gupta (1984)
Leucaena leucocephala	PR 2.53	PR 171							Kang et al. (1985)
Leucaena leucocephala	L 4.33		L 0.28		L 2.50		L 1.49		Wilson and Kang (1986)
Prosopis glandulosa	L 2.8; W 0.7								Rundel et al. (1982)
Tephrosia candida	L 3.8	L 118	L 0.2	L 7					Agboola (1982)

L = leaf, PR = prunings (probably mainly leaf), W = wood, BR = branchwood

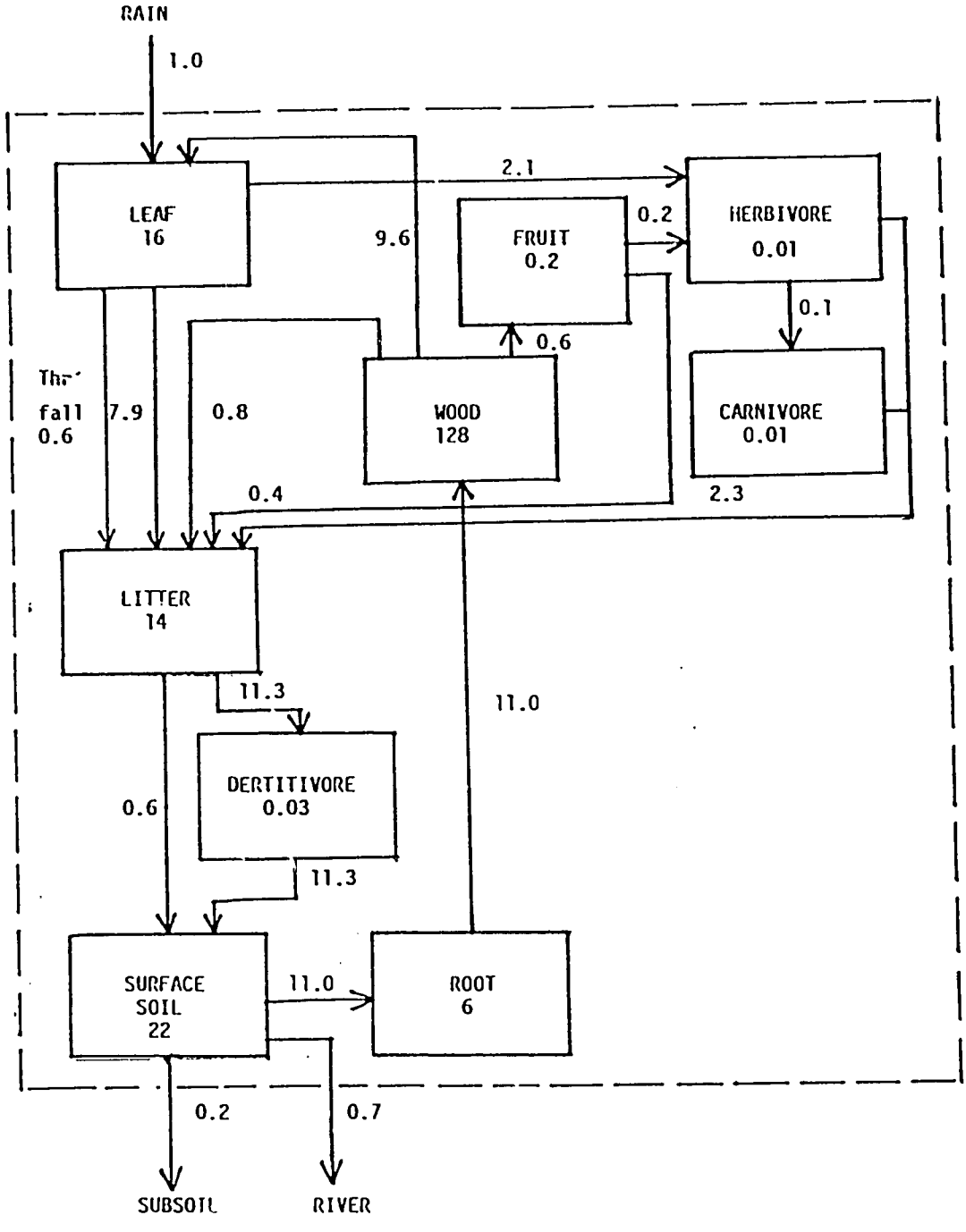

Figure 11. The phosphorus cycle under rain forest. Panama. After Golley et al. (1975).

size of gains to and losses from the system compared with the internal cycle: 1.0 kg P/ha/yr gained in rainfall, 0.2 lost to the "subsoil" and 0.7 in leaching, making total gains and losses only 5% of the P in the internal cycle. Corresponding figures for the potassium cycle in this study are 187.5 kg K/ha/yr cycling and gains equal to losses at 9.3, which is again 5% of the internal cycle. Thus a forest ecosystem is capable of maintaining a nutrient cycle that is 95% closed.

Comparable data for nutrient cycling under annual cropping are dominated by the large nutrient output as harvest, sometimes by a considerable nutrient loss through erosion, and either input as fertilizer or a net loss from the soil. Lelong et al. (1984) give data for direct comparisons of vegetation with fertilized maize for three environments in West Africa (humid, moist subhumid and dry subhumid); these data are dominated by large losses through erosion on the cultivated plots; leaching losses are somewhat smaller under maize than vegetation, presumably because of the lower infiltration. Their results are summarized as:

Natural vegetation:	-	internal cycling large relative to inputs and outputs; equilibrium between inputs and outputs.
Annual cropping:	-	internal cycling small relative to inputs and outputs;
	-	outputs greatly exceed inputs, causing net loss from the soil.

Numerous studies have shown the substantial negative nutrient balances, unless compensated by fertilizers, in systems of permanent and semi-permanent annual cropping. The nutrient-balances obtained for various climatic zones of West Africa, summarized by Pieri (1983, 1985) and Roose (1979, 1980), may be cited as model examples. There is a need for thorough studies of all components in nutrient cycling to be conducted for agroforestry systems, with agricultural plots for comparison.

Up to the present, most attention has been concentrated on the potential of nitrogen-fixing trees, with their clearly-demonstrated capacity to enhance this input to the plant-soil cycle. It is suggested that this has led to an over-emphasis on this one aspect, and that substantial research into the effects of tree/crop systems on other nutrients, particularly phosphorus, is now called for. In an earlier review, Nair (1984) cited as one of the major benefits from agroforestry systems that of making nutrient cycles less open, increasing the ratio between internal cycling and external losses. The evidence for this hypothesis is strong but remains for the most part indirect.

6 OTHER SOIL PROPERTIES

6.1 Soil physical properties

Soil physical properties form a single, interactive, complex, the basis for which is the degree of aggregation between particles and the volume and size distribution of pores. Aggregation and pore space determine structure, consistence, bulk density and porosity, which in turn are linked to available water capacity, permeability, soil drainage (aeration) and resistance to erosion. A well-developed soil structure, besides aiding tillage, provides favourable conditions for development of fine feeder roots and mycorrhiza, so increasing efficiency of nutrient uptake. Key features for development of favourable physical properties are to promote first, the existence of stable aggregation between particles, and secondly, a mixture of fine pores (<50 μm) which retain moisture against gravity, and coarser pores to permit drainage of excess moisture and thus oxygen supply to roots.

The factors which determine these physical properties are soil texture, the kinds of clay minerals present, and the amount of organic matter, this last supplying the natural gums which bind particles together. Texture and clay minerals are largely determined by natural soil-forming factors and processes. The opportunity to influence phsycial properties through management therefore lies mainly through maintenance of soil organic matter.

The effects of soil physical properties on root growth, the soil water regime, erosion resistance and crop yields, are reviewed in the symposium, "Soil physical properties and crop production in the tropics" (Lal and Greenland, 1979). There is ample evidence for a degradation of structure and pore space can substantially reduce crop yields, even if the indirect effect on root development and nutrient uptake is excluded. Severe degradation of physical properties leads to formation of pans or crusts, reducing infiltration, decreasing erosion resistance and hindering germination of seedlings.

Such effects arise on most soil types, but are of particular importance on very sandy soils (regosols and arenosols) and heavy clays (vertisols and many gleysols). They are relatively less important on soils where the presence of free iron oxides leads to strong and stable aggregation (nitosols and some ferralsols). If organic matter is reduced, sandy soils lose what little aggregation they possess and become still more drought-prone. Heavy clays naturally tend towards large and hard soil aggregates, difficult tillage and poor internal drainage, but these problems are reduced if organic matter content is maintained.

There is clear evidence for the favourable influence of trees on soil physical properties. This is first, the invariably good physical condition of soils under natural forests, and secondly, the observed decline in physical properties following forest clearance (Lal et al., 1986). This provides a strong a priori indication that agroforestry systems are likely to have a favourable influence on physical properties.

Direct evidence, in the form of quantitative observations linked to control plots, is scanty. Improved water-holding capacity has been reported beneath Acacia albida (Felker, 1978). Soil aggregation was measured on four-year old plantations on an acrisol in Brazil, established on land cleared from natural forest; the degree of aggregation increased, compared with forest, under Pinus caribaea but decreased under both oil palm and rubber (Silva, quoted in Sanchez, 1987, p. 213).

A striking result comes from hedgerow intercropping trials of maize with Gliricidia, Flemingia and Cassia on a ferric luvisol at Ibadan, Nigeria (Yamoah et al., 1986b). Besides hedgerows from which prunings were applied to the soil, there were control plots of two kinds: hedgerows present but prunings removed, and maize without hedgerows. On unfertilized plots with prunings removed, maize grew better close to the hedgerows than in the middle of the alleys; and furthermore, maize growth was better on plots with prunings removed than on controls without hedgerows. Maize root growth was less without hedgerows (Table 18).

The conclusion from this last study may be quoted, and suggested as also applicable to other agroforestry practices. "The significance of an alley cropping system should therefore be viewed in the light of its improvement in both the physical and chemical properties of the soil. The improvement in soil physical properties...may prove more important in many cases than the supply of nutrients, for the nutrients released by prunings become useless if the soil physical properties do not favour proper root development to tap these nutrients. A study into the effects of alley shrubs on soil physical properties is highly recommended" (Yamoah et al., 1986b).

6.2 Acidity

A strongly acid soil is one with a pH of less than 5.0. Below this value, Al^{+++} ions progressively replace H^{+} ions, becoming predominant at around pH 4.0. For this reason, strong acidity is also referred to as aluminium toxicity (Sanchez, 1976).

Problems related to soil acidity are of two kinds: making productive use of soils that are naturally strongly acid, and checking acidification caused by fertilizers and agricultural use.

The naturally acid soils of the humid tropics, ferralsols and acrisols, are for the st part under crops which tolerate strong acidity, such as tea and rubber. The major problem is found where strongly acid soils occur in the moist subhumid zone, under conditions climatically suited to maize and other non-tolerant crops; examples are the cerrado soils of the Mato Grosso, Brazil, and the acid, sandy soils of Northern Province, Zambia.

A degree of acidification commonly occurs under agricultural use, but can become severe with repeated application of some kinds of fertilizer, notably ammonium sulphate. This is a hazard for the agricultural use of soils of both moderate and strong acidity.

Table 18. Effect of hedgerows on root weight of intercropped maize. Ibadan, Nigeria (Yamoah et al., 1986b).

Hedgerow species	Prunings	Maize root weight (g/plant)	
		3 weeks	8 weeks
Gliricidia sepium	Removed	0.29	0.83
Flemingia congesta	"	0.25	1.24
Cassia siamea	"	0.14	0.81
Gliricidia sepium	Retained	0.36	1.24
Flemingia congesta	"	0.30	1.80
Cassia siamea	"	0.19	0.89
Control, no hedgerows	-	0.11	0.58
LSD (0.05)		0.11	0.51

Thus there are two distinct problems:

i. Can agroforestry systems raise the pH of already acid soils?

ii. Can agroforestry systems help to check acidification?

The reason for supposing that trees may be able to check acidity lies in the concentration of calcium and of other bases in their leaves, drawn from deeper soil layers and recycled to the surface.

Trees do not necessarily check acidity: soils under natural rain forest frequently have a pH of 4.0-4.5. Forest clearance on acid soils commonly leads to a reduction in acidity through the addition of bases in burnt or decomposing litter. This is normally followed by increasing acidity during cultivation as the added bases are leached. If a soil is naturally acid, this can be temporarily checked by liming, but the processes tending to restore the natural condition are powerful and persistent.

One traditional agroforestry system does successfully reduce acidity. This is the chitemene system of shifting cultivation, found in Zambia and some adjacent countries, in the subhumid zone. Trees and shrubs from natural savanna growth are felled, piled up onto part of the area from which they have come, and burnt. Rises of up to 2.0 pH points have been recorded (Stromgaard, 1985). However, this results from the release of bases which have not only come from a larger area than the cultivated land, but have accumulated in some 20 years of tree growth.

There are various approximate rules for determining the "lime requirement" of an acid soil. Sanchez (1976) suggests that for every milliequivalent of exchangeable aluminium present in the soil, 1.5 meq of calcium should be applied, or 1.65 t/ha of $CaCO_3$ equivalent. The lime requirement needed to raise topsoil pH by 1.0 points is typically 5 t/ha, and needs to be repeated every 5 years or so.

This may be compared with a tree biomass production of 10 000 kg DM/ha/yr, typical for the moist savanna zone, and a mean tissue calcium content of 1% (higher for leaves, lower for other parts). This gives an accumulation of calcium, in a complete tree cover, of 100 kg Ca/ha/yr, equivalent to 250 kg $CaCO_3$ or somewhat more of lime fertilizer. This is only one twentieth of a typical lime requirement. In many agroforestry systems, notably hedgerow intercropping, the tree cover is well below 100%. Moreover, the bases contained in the litter have necessarily been extracted from the soil.

Thus, the influence of trees on soil acidity is in a favourable direction, but is unlikely to be of a sufficient order of magnitude to have an appreciable effect on soil acidity. It is therefore very doubtful if tree litter can be a significant means of raising pH on naturally acid soils.

The situation is different with respect to checking acidification. In the first place, if the tree component is employed as the means for fertility maintenance, then no tendency towards acidification should arise. Secondly, where fertilizers lead to a trend towards acidification, this is of the order of 0.1 pH points per year. The recycling of bases in tree litter could quite probably be sufficient to counteract an effect of this magnitude.

Many of the trees commonly used in agroforestry have a moderate level of calcium in their tissues. Gmelina arborea appears to have a particular potential. For plantations at two sites in Brazil, 117 and 161 kg Ca/ha/yr were returned to the soil in litter (Chijoke, 1980). On an acrisol at Para, Brazil, topsoil pH and calcium were measured under forest, after forest clearance, and after 8 years under a Gmelina arborea plantation, with the results (Sanchez and Russell, 1978):

	Forest	After clearance	After 8 years under Gmelina
pH	3.9	4.8	5.1
Ca, kg/ha	50	480	800

6.3 Erosion control and soil fertility

Soil erosion is widely recognized as a serious problem in the tropics, particularly in "sloping lands", areas with predominantly moderate to steep slopes. The potential of agroforestry for the control of soil erosion is the subject of Part I of this review (Young, 1986a). In the present context, the most pertinent conclusions are:

i. Except in extreme cases, the major adverse effect of erosion is lowering of crop yields through loss of organic matter and nutrients in eroded sediment and runoff. For a given rate of soil loss, effects of fertility are greater in tropical than temperate soils, and greatest on highly-weathered tropical soils.

ii. There is a substantial potential for reducing erosion through the use of agroforestry-based methods.

Evidence for the first of these conclusions continues to accumulate. An aspect not sufficiently emphasized in the earlier review is that loss of nutrients in dissolved form in runoff water may be substantial, sometimes exceeding that contained in eroded sediment (Lal, 1980; Stocking, 1986).

Erosion at 50 t/ha/yr, a rate common on sloping land under cereal cropping in the humid and subhumid tropics, can lead to nutrient losses equivalent to removing from the land 2-5 bags of fertilizer per year! The financial cost, in additional fertilizer or lost crop production, is apparent.

For the second conclusion, direct proof, in the form of controlled field trials, is scarce. But there is strong indirect evidence, summarized in the above-mentioned review, that at least eight agroforestry practices have a potential to reduce erosion to acceptable levels.

Putting these conclusions together, among the various means for maintaining fertility through agroforestry, it may well prove that the greatest potential lies in its potential to control erosion.

7 THE ROLE OF ROOTS

7.1 Root biomass, turnover and nutrient content

A trend in plant science in recent years has been recognition of the importance of roots as a component in primary production. This has much significance for soil fertility, both in general and specifically for agroforestry systems.

Tree root systems consist of: (i) structural roots, of medium to large diameter and relatively permanent; (ii) fine or feeder roots, 1-2 mm diameter; (iii) very fine root hairs; (iv) mycorrhizae.

Three feature of root systems are significant: biomass, turnover and nutrient content.

The root biomass of trees is typically 20-30% of total plant biomass (equivalent to 25-43% of above-ground biomass, or a shoot: root ratio of 4:1 to 2.33:1). It can be as low as 15% in some rain forests, has been measured as 35-40% in moist savanna, and can rise well above 50% in semi-arid vegetation. Data based on core sampling can greatly under-estimate roots, as compared with complete excavation. Plants reduce their shoot growth relative to roots on sites low in nutrients, raising the root percentage. (Huttel, 1975; Klinge et al., 1975; Lamotte, 1975; Jordan and Escalente, 1980; Reichle, 1981; Koopmans and Andriesse, 1982; Jordan et al., 1982; Atkinson et al., 1983; Mellilo and Gosz, 1983; Bowen, 1985; Cannell, 1985; McMurtrie, 1985.)

Such data, however, refer to the root biomass observed at one time. Annual net primary production of roots is substantially more than the standing biomass found at any one time. This is partly through exudation but mainly because fine roots are sloughed off, especially during periods adverse to growth. Some feeder roots begin to decay within a few days of growth. Because of this turnover, the proportion of photosynthesized carbon which passes into the root system is substantially higher than the ratio of standing biomass. For example, in Venezuelan rain forest, roots were estimated to make up 15% of standing biomass but 25% of biomass increment. In natural and plantation forests, roots may account for 30-70% of total biomass production. (Coleman, 1976; Hermann, 1977; Sauerbeck et al., 1982; Bowen, 1984, 1985; Clarkson, 1985; Fogel, 1985; Huck, 1983.)

In a coffee plantation with shade trees in Venezuela, root production in the upper 7.5 cm of soil was measured at 6600 kg/ha/yr, with much seasonal variation in the living root biomass, indicating turnover (Cuenca et al., 1983).

Thus there is an element in rooting systems partly resembling the shedding of leaf litter; in trees, the structural roots are comparable with the trunk and branches in having a steady increment with a low turnover, but the feeder roots are analogous with leaves fruit and flowers, in being subject to shedding and regrowth.

The third feature of significance is that an appreciable proportion of the plant nutrient store is contained in the root system. In rain forest on a ferralsol, 10% of plant nitrogen occurred in the root system, and in forest on a podzol low in nutrients, 40% (Jordan et al., 1982). Nutrients in the root system on two sites in successional forest were as follows (Koopmans and Andriesse, 1982):

	Percentage of plant biomass nutrients in root system			
	N	P	K	Ca
Sri Lanka	16	9	13	17
Sarawak	13	28	18	12

7.2 Mycorrhizae

Mycorrhizae are symbiotic associations between plant roots and soil fungi. The ectomycorrhizae remain external to the host roots, the endomycorrhizae penetrate them. Among the latter, vesicular arbuscular mycorrhizae (VAM) are the most common, and have the greatest potential impact on plant nutrition.

Mycorrhizae absorb carbonhydrates from the host plant. In return, they effectively expand the plant's root system, assisting in the extraction of nutrients from the soil. Nutrient ions only travel short distances in soil, hence this expansion of the root system allows a larger nutrient pool to be tapped, and can thus increase uptake relative to leaching. Mycorrhizae are of particular value in improving plant access to phosphorus, because of the very short transmission distance on phosphate ions in soil. This applies also to phosphate added to fertilizer (ILCA, 1986).

Natural plant-soil communities contain mycorrhizae adapted to the local environment. For planted trees, inoculation may be necessary; where suitable strains are absent, the effects of mycorrhizal inoculation on growth may be spectacular. Inoculation is common practice in coniferous plantation forestry, but may be necessary also in agroforestry. Thus for high rates of growth and nitrogen fixation on a ferralsol, effective Rhizobium inoculation and mycorrhizal colonization was found to be essential to high rates of growth and nitrogen fixation (Purcino et al., 1986).

The decay of mycorrhizal hyphae is also a pathway for return of nutrients to the soil (Fogel, 1980).

7.3 Roots and soil fertility under agroforestry

The functions of roots in soil fertility are to contribute to maintenance of soil organic matter and physical conditions, and to take up nutrients and water. For trees, the nutrient role includes taking

up nutrients from deeper soil layers and returning them, via litter, to the soil surface, and increasing the ratio of uptake to leaching loss. There is a further indirect function of stabilizing the soil, thereby reducing nutrient loss in erosion.

The return of root residues provides an input to soil organic matter even in where all above-ground residues are removed. This is one reason why low-input, agricultural systems do not totally cease to function. Even where crop residues are removed, part of the organic matter that has been gained through photosynthesis and translocated to the roots is transferred to the soil. The most soil-degrading land use system the author has seen was a eucalyptus plantation in Viet Nam where litter was collected, and at harvest, not only were stems, branches and bark removed, but the root systems dug up for fuel.

The effects of rate of root growth and turnover on soil organic matter are illustrated by computer modelling of a temperate woodland community (beech, in Denmark). This model was run for 500 years to reach equilibrium conditions. The uncertainty over root inputs was handled by a sensitivity test. Halving the estimate of fine root input decreased the equilibrium humus value by 29%, doubling it in increased the humus equilibrium by 60%.

In shifting cultivation systems, the standard picture of soil organic matter is of the sharp fall during cultivation being matched by a steady build-up during the fallow period, giving a saw-tooth pattern. Computer modelling, using the SCUAF model, produces a different picture. The rise in soil organic matter during the forest fallow is slow, since nearly most of the plant increment is taken into the standing biomass. The main restoration comes at felling when, even though most of the above-ground material is lost in burning, the residual root mass dies back and is transformed to soil organic matter. In place of the conventional saw-tooth picture, the pattern is more nearly one of ------/\--------/\--------/\ with a repeating input from root decay followed by loss under cultivation (Young et al., 1986, p. 51).

Data comparing roots with leaf biomass (but not total above-ground biomass) for a range of land use systems in Costa Rica and Mexico are shown in Table 19. In five of the nine systems, roots exceed leaves, including three of the four agroforestry systems. The absolute biomass of roots in agroforestry is more than twice that of all agricultural systems reported; given the known fact of root turnover, this is important with respect to the amount of organic matter and nutrients entering the soil.

In hedgerow intercropping, root growth in maize was observed to improve close to hedgerows on plots where shrub prunings were removed, and to be better as a whole on such plots than on control plots without hedgerows (Yamoah et al., 1986b; see Table 18 above). Whether this is related to microclimatic effects or to those of hedgerow roots is not known.

Table 19. Leaf and root biomass in nine land use systems.(Ewel, 1982)

	Agricultural systems			Forest systems		Agroforestry systems			
	Young maize	Mature maize	Sweet potato	Gmelina plantation	Secondary forest	Coffee-Erythrina	Cacao-Cordia	Tree garden	Planted fallow
Leaf biomass, kg/ha	330	1000	1070	3120	3070	2720	2040	2450	2480
Root biomass, kg/ha (to 25 cm)	390	1150	410	1280	2170	2350	2720	3070	4220
Ratio, roots to leaves	1.18	1.15	0.38	0.41	0.71	0.86	1.33	1.25	1.70

In sylvopastoral systems, the existence of deep tap roots allow trees and shrubs to remain throughout the dry season, providing fodder at a time when all herbage is grazed or unpalatable. The contrast between the condition of goats and cattle at such times is striking.

A remarkable adaptation to a desert environment is found in the Sonoran Desert, California, USA, where mesquite (Prosopis glandulosa) develops nitrogen-fixing nodules and VAM fungi at 4-5 m depth (Virginia et al., 1986).

In those agroforestry systems in which tree foliage is removed, as will be inevitable in areas with a fodder shortage, the input of organic matter and recycling of nutrients by roots offers some return to the soil, although modelling suggests that this alone is normally insufficient to maintain soil fertility.

The key to making best use of root systems in agroforestry lies in maximizing their positive effects whilst reducing tree-crop competition for moisture and nutrients. The basis usually quoted is to combine shallow-rooting crops with deep-rooting trees. Nutrient competition is minimized if lateral root spread is low, but this reduces the nutrient-recovery potential of tree roots. Further discussion of this apsect of resource-sharing is given by Buck (1985).

Root observations are costly in time and effort, but an understanding of the functioning of systems as a whole is impossible without them. The basic approach is one of transects across the tree-crop interface, using coring, trenching, ingrowth bags or rhizotrons (permanent trenches with a glass plate along one side). Techniques are summarised in Anderson and Ingram (in press). For specialized research, carbon-14 labelling permits measurement of root turnover (Helal and Sauerbeck, 1983).

There is a clear need for further information on this topic. Basic data include: (i) the assembly of systematic knowledge on the rooting biomass and patterns of tree species: (ii) records of root development at the tree-crop interface under a variety of environmental conditions. It is often difficult to separate root effects from microclimatic differences, but the former can be isolated by vertical sheeting and the latter reduced by frequent pruning. Experiments comparing hedgerow intercropping with equivalent mulching achieved by manual transfer from tree plantations may help to identify specific root effects on soil.

Root research is required at stations with special facilities, but should not be confined to these. In all agroforestry research, at least sample observations of root mass and distribution should be made. The simplest method is to dig a trench across the interface at the conclusion of a trial. This is a case where a few observations are better than none at all.

8 TREES AND SHRUBS FOR SOIL IMPROVEMENT

8.1 General

Table 20 lists tree genera and species identified as beneficial for maintenance or improvement of soil fertility. The column "Noted by" lists trees noted as favourable for soils in previous reviews, those by Nair (1984), Huxley (1985) and Sanchez (1985, 1987). "HI trials" marks those species known to have been included in hedgerow intercropping trials, for which it is assumed that fertility is among the reasons. This range is being rapidly extended. "NFTA" indicates those species selected as priority for soil amendment by the Nitrogen Fixing Tree Association (Lyman and Brewbaker, 1982). Other species were added from publications, the opinions of colleagues and personal experience.

Excluding the bamboos, Table 20 lists 31 genera and 53 species. The most clearly established are one species identified primarily by farmers, Acacia albida, and one initially selected and improved by scientists, Leucaena leucocephala. On weight of evidence and opinion, a suggested "top ten" species are:

Acacia albida
Acacia tortilis
Calliandra calothyrsus
Casuarina equisetifolia
Erythrina poeppigiana
Gliricidia sepium
Inga jinicuil
Leucaena leucocephala
Prosopis cineraria
Sesbania sesban

There will certainly be other species which are of high value for soil improvement, and readers of this review are invited to send suggestions.

8.2 Trees and shrubs

The following notes refer to soil fertility aspects only, and are not intended as a guide to species selection. Information on environmental adaptation, phenology and range of uses is given in the ICRAF multipurpose tree and shrub inventory (von Carlowitz, 1986, Tables 3 and 4) and reports of the Nitrogen Fixing Tree Association (Lyman and Brewbaker, 1982; MacDicken and Brewbaker, 1984).

Acacia

Acacia albida is one of the two best-known soil improving trees. It is valued by farmers in the semi-arid zone of West Africa and in the subhumid zone, for example in Senegal, Malawi and Ethiopia. 50-100% increases in soil organic matter and nitrogen beneath trees, as compared with surrounding soils, have been reported, associated with higher water-holding capacity. Unfertilized millet and groundnut yields can be up to 100% higher under treees. The difference is

Table 20. Trees and shrubs for soil improvement. Noted by: N = Nair (1984), H = Huxley (1985, p.19), S = Sanchez (1985, 1987). HI trials = used in hedgerow intercropping trials. NFTA = listed as priority for soil amendment by Nitrogen Fixing Tree Association (Lyman and Brewbaker, 1982): ** = first priority; * = second priority (sic).

	Noted by	N-fixing	HI trials	NFTA
Acacia albida	NHS	/		**
Acacia auriculiformis		/		**
Acacia mangium		/		*
Acacia mearnsii	N	/		**
Acacia senegal	N	/		*
Acacia tortilis	N	/		*
Acioa barteri	N		/	
Alchornea cordifolia			/	
Acrocarpus fraxinifolius	H	/		
Albizia lebbeck	NH	/	/	*
Albizia falcataria				*
Alnus spp., inc. nepalensis, acuminata		/		*
Azadirachta indica	N			
(Bamboo genera)				
Cajanus cajan	N	/	/	
Calliandra calothyrsus	NH	/	/	*
Cassia siamea	N		/	
Casuarina spp., mainly equisetifolia		/		*
Cordia alliodora	NS			
Erythrina spp. inc.:	NHS	/	/	*
Erythrina poeppigiana	NS	/		*
Erythrina fusca		/		**
Flemingia congesta		/	/	
Gliricidia sepium	NH	/	/	*
Gmelina arborea	NS		/	
Grevillea robusta	NH			
Inga spp., inc. edulis, jinicuil, dulce, vera	NHS	/	/	*

Table 20 (continued)

	Noted by	N-fixing	HI trials	NFTA
Lespedeza spp., inc. bicolor, thunbergii		N	/	
Leucaena leucocephala	NHS	/	/	**
Leucaena diversifolia		/		*
Melia spp., inc. azedarach, volkensii				
Parkia spp., inc. africana, biglobosa, clappertonia, roxburghii	N	/		*
Parkinsonia aculeata				*
Paulownia spp.				
Pithecellobium dulce	N	/		*
Prosopis spp., inc.:	NHS	/		*
Prosopis cineraria		/		*
Prosopis glandulosa		/		*
Prosopis juliflora		/		*
Robinia pseudoacacia		/		
Samanea saman		/		*
Sesbania spp., inc.:	H			
Sesbania bispinosa	N	/		
Sesbania grandiflora	N	/		*
Sesbania rostrata		/	/	
Sesbania sesban		/		
Terminalia spp.	H			
Ziziphus nummularia	N			

smaller if fertilized, and believed to be due mainly to nitrogen fixation. Maize and sorghum yields in Ethiopia were over 50% higher under trees, the differences being significant at under 5% probability levels. Besides preserving natural trees, it has been planted in development projects. (Radwanski and Wickens, 1967; Dancette and Poulain, 1969; Felker, 1978 (review); Kirmse and Norton, 1984; Poschen, 1986; Miehe, 1986.)

A. senegal (gum arabic) is employed in a system of rotational intercropping in Sudan; after 4 years intercropping with food crops, the trees are left as a soil-restoring fallow for some 16 years before being felled and replanted (M.M. Ballal, personal communication).

Acacias benefit the growth of pastures and soils beneath them, notably A. tortilis (included in the "top ten" above as a representative of sylvopastoral trees). To what extent its pasture and soil improvement potential is a direct effect of the tree, or is due to animals and birds resting there, is not known.

Many other acacias benefit the soil, it is believed mainly through nitrogen fixation. A. auriculiformis and A. mearnsii were identified as first priority for soil amendment by the Nitrogen-Fixing Tree Association (Lyman and Brewbaker, 1982). A. mangium has a slower litter breakdown, and thus nutrient release, than most acacias.

Alnus

This is one of the few non-leguminous genera to include nitrogen-fixing species. It is partly subtropical to temperate, and valued in tropical highlands, for example Nepal and Costa Rica.

Azadirachta

Azadirachta indica (neem) is a tree with a very wide range of uses, among which is a capacity for soil improvement. Although not a nitrogen-fixer, improvements in soil N beneath it has been observed, as well as higher soil carbon and bases, and a lower pH (Radwanski, 1969; Radawanski and Wickens, 1981).

Bamboo

The definition of agroforestry includes bamboos among the "woody perennials". They are a common component of home gardens, where the abundant litter is likely to contribute to soil fertility. Under Dendrocalamus bamboo in north Vietnam, soil physical conditions are exceptionally good (personal observation). The same genus has been reported as an accumulator of potassium (Toky and Ramakrishnan, 1982). In shifting cultivation systems in north-east India, bamboos play an important role in nutrient accumulation (Ramakrishnan, in press). Given their suitability for both barrier and cover functions in erosion control, research into the possible capacity of bamboos to improve fertility is important.

Cajanus

Cajanus cajan (pigeon pea) is sometimes treated as the tree component in agroforestry, and has been used in hedgerow intercropping trials. Planted along the contour, it can be used in erosion control. At Ibadan, a pigeon-pea maize rotation not surprisingly improved soil physical properties, organic carbon and bases, as compared with continuous maize (Hulugalle and Lal, 1986).

Calliandra

Calliandra calothyrsus is a multipurpose tree valued especially in Java but grown widely. It can be established on degraded soils,, and lead to their improvement, and has been used in improved fallow. Reasons given are nitrogen fixation, abundant litter with rapid decay, and deep rooting with nutrient uptake (National Resource Council, 1983).

Cassia

Cassia siamea has the capacity to grow on poor soils and is commonly used in hedgerow intercropping trials, although the extent of its soil-improving potential is not known. There is even doubt as to whether it is nitrogen-fixing, although established opinion is that it is not. Litter is plentiful, and there appear to be no strong ill-effects on adjacent crops. Given its ease of establishment, good survival, tolerance of drought and poor soils, potential in erosion control and range of uses, research on its effects on soils is desirable.

Casuarina

Casuarina equisetifolia is widely and successfully used in sand dune stabilization and as windbreaks, and C. glauca in erosion control. Besides nitrogen-fixation, the valuable feature is the dense root mat, which stabilizes the soil surface and, by its decay, helps to build up soil organic matter. There is a range of species adapted to different climates (National Research Council, 1984).

Cordia

Cordia alliodora is widely used in Central America, singly or in combination with Erythrina and Inga, as a "shade tree" in coffee and cacao plantations. This appelation underestimates its functions. Even without an associated N-fixing tree, it achieves considerable recycling of nutrients through litter (Alpizar et al., 1986-7).

Erythrina

Erythrina poeppigiana is the main N-fixing species used in combination with coffee and cacao in Latin America. It is pruned and the prunings

used as mulch, the fertilization effects of which are known to farmers. Besides N-fixation, there is considerable recycling of nutrients. This can include nutrients added in fertilizer, leading to their more efficient utilization. (Cf. Section 9.3.2).

Eucalyptus

"Eucalyptus, a tree widely planted by farmers but not in favour with agroforestry scientists." This adaptation of a popular saying carriers the justification for including it in notes concerned with trees and soil fertility, for the reputation which held by the commonly planted eucalypts (e.g. E. camaldulensis, globulus, grandis, saligna, tereticornis) is of being a cause of soil erosion or degradation. Its effects on the water cycle have also aroused strong feelings, becoming a political issue in some quarters. Farmers, however, will continue to plant eucalypts, as a source of satisfactory fuelwood with easy establishment, good survival, and a potential for repeated coppicing.

Evidence on the effects on soils of eucalyptus monocultures is summarized in a review by Poore and Fries (1985). The following are the conclusions from this review, to which reference should be made for evidence and discussion.

> Erosion "Eucalypts are not good trees for erosion control. Under dry conditions, ground vegetation is suppressed by root competition. This effect is accentuated by collecting or burning of litter."
>
> Fertility "Natural eucalypt forest appears to control the leaching and run-off of nutrients as well as, even perhaps slightly better than, other natural forests.....Where eucalypts are planted on bare sites, there is an accumulation and incorporation of organic matter. There is no evidence of podzolization or irreversible deterioration of soil....(However,)....The cropping of eucalypts on short rotation, especially if the whole biomass is taken, leads to rapid depletion of the reserve of nutrients in the soil. This is a direct consequence of rapid growth; it would apply in much the same way to any other highly productive crop....The effects of eucalyptus on ground vegetation depend very much upon climate....Ground vegetation is less affected in wet conditions than in dry, when it may be greatly reduced....There is evidence that some eucalypt species produce toxins that inhibit the growth of some annual herbs.

The above review is not concerned with effects on agricultural crops, on which there is as yet little systematic evidence. The slow breakdown of leaf litter does not in itself reduce nutrient return, and many of the adverse effects on interplanted crops may be due to shading or toxins, rather than soil fertility as such. Based on data in George (1982) and Turner and Lambert (1983), the order of magnitude for nutrient removal in whole-tree harvest of eucalypts 10 years old with a biomass of 90 000 kg DM/ha is (kg/ha): N 100-400, P 10-100, K 100-250, Ca 250-1000. Litter fall is low in early years, increasing at maturity. Some two thirds of the gross annual nutrient uptake is returned to the soil in litter.

Thus, many of the adverse effects on associated crops are not due primarily to degradation of soil fertility. However, there is no reason to doubt the common view that eucalypts should not be planted in intimate mixtures with crops. Experiments are in progress in Malawi and India in which E. tereticornis, in a square arrangement at various spacings, is interplanted with a range of crops, the results from which will be valuable in showing the extent of crop yield reduction and, if terminal soil sampling is carried out, of soil changes.

Gliricidia

Gliricidia sepium are among the few species so far identified that may have a potential equal to Leucaena as a pruned shrub in hedgerow intercropping.

Gmelina

Gmelina arborea is a valued source of poles and timber but has a depressive effect on yields of adjacent crops, possibly owing to dense shade. A field study of its effects on soils has been carried out, unfortunately with the conclusions presented in such as way as to make it difficult to assess their significance (Chijoke, 1980). As compared with previous natural forest, soil reaction slightly increased during the first six years under Gmelina. Large amounts of N, Ca and, especially, K are taken up into the growing tree, but there is also considerable return of these elements in litter. Increase in soil pH and calcium under a Gmelina plantation have occurred in Para, Brazil (see above, Section 6.2) and current research is in progress at Yurimaguas, Peru (Perez et al., 1987). Where amelioration of soil acidity is desired, and labour abundant, it could be worth investigating the potential of growing Gmelina in compact blocks and manually transferring leaf litter to land under crops.

Grevillea

Grevillea robusta is widely grown as a shade tree, and planted on soil conservation structures. Its litter decay is moderately slow. There is no evidence on effects on soil fertility, but at the least these do not appear to be adverse (Neumann, 1983).

Inga

Several species of Inga, notably I. jinicuil, are valued for N-fixation and nutrient recycling in litter, and used in combinations with coffee and cacao (Section 9.3.2). It is also being tried in hedgerow intercropping.

Leucaena

The most widely-used tree in modern, scientific, agroforestry, particularly but by no means exclusively hedgerow intercropping, leucaena (Leucaena leucocephala) is valued especially for its effects on soil fertility. Formerly considered a tree mainly for the humid tropics, it has recently been found to equal or excel the performance

of most other species in moist and dry subhumid climates and even into the margin of the semi-arid zone. It is being promoted in some areas as a substitute for fertilizer, but also, when used in combination with moderate levels of fertilizer, it improves the crop response (cereals, legumes, rice). There can be a residual effect on the succeeding crop. (Pound and Cairo, 1983; Chagas et al, 1983; Nair, 1984, p. 50; Kang et al., 1985; Read et al., 1985; Weerakoon and Gunasekera, 1985; O.T. Edje, personal communication).

Given this record of success, it is useful to note what are the properties relevant to soil fertility that are possessed by leucaena:

- High biomass production: 10 000-25 000 kg DM/ha/yr.
- High nitrogen fixation: 100-500 kg N/ha/yr.
- High level of nitrogen in leaves (2.5-4.0%), and thus high rate of return in litter or prunings.
- Substantial content of other nutrients in leaves (Table 17).
- High biomass in the root system, possibly leading to substantial annual turnover or organic matter and nutrients (no evidence) and a favourable effect on soil physical properties.

Other species, particularly L. diversifolia, may have a better performance on some sites.

The main soil limitation is a reduction in growth on strongly acid soils; a linear decrease in biomass and nitrogen from pH 7.0 to 4.5 has been reported (Fox at al., 1985).

As with all species, the magnitude of effects on soil fertility depend strongly on whether prunings are returned to the soil. Data from Ibadan, under a bimodal moist subhumid climate, show a capacity of 4 m width leucaena hedgerows to sustain both soil fertility and yields of intercrops, provided prunings are returned, but a decline in soil properties and crop yields if removed (Kang et al., 1985).

Much information is contained in Leucaena Research Reports.

Parkia

In West Africa, higher crop yields are reported beneath the canopy of several Parkia species, including in Ghana (P. clappertonia, E. O. Asare, personal communication) and Nigeria (personal observation).

Paulownia

Paulownia elongata has been described as "China's wonder tree". It is grown in temperate subhumid climates (latitude 30-40°N). With trees spaced at 5 x 10 m, yields of intercropped wheat are as high as on land without trees, and at 5 x 20-40 m spacing, 7-10% higher. The root system is deep, mainly below 40 cm. (Yoon and Toomey 1986; Zhu, in press).

Prosopis

Prosopis cineraria is a tree of the semi-arid to dry subhumid zones, valued in India for a variety of uses, amongst which is its effect on soil fertility. It can lay claim to being the subject of the earliest publications on agroforestry, for "Indian scriptures are replete with a variety of references on khejri". Its reputed effects on fertility extend beyond soils to livestock and humans!

Growth of both pastures and crops are reported as equal or better under Prosopis than on adjacent land. It outperforms other species in the same area in this respect. Soil nutrient content is higher beneath the trees than on adjacent open land (Table 21). There is also an improvement in organic matter, soil physical conditions and water-holding capacity (Aggarwal, 1980; Mann and Saxena, 1980).

Prosopis juliflora does not appear to equal P. cineraria in soil improvement but has a high litter production, and has been successfully based for reclamation of eroded land. It may, however, be competitive with adjacent crops.

Some Prosopis species have a remarkable capacity for biomass production and nitrogen fixation under extreme heat and drought stress. In the Sonoran Desert, California, USA, a difference in soil nitrogen, 0-60 cm, of 10 200 kg N/ha under tree canopy, compared with 1600 outside, has been recorded (Rundel et al., 1982; Felker et al, 1983).

Robinia

Robinia pseudoacacia (black locust) is a N-fixing tree that is excellent for reclamation of eroded land and soil stabilization on steep slopes.

Sesbania

At least four Sesbania species are employed in agroforestry, both traditional and modern. In western Kenya, S. sesban is planted among crops, and there are qualitative observations of equal or greater yields beneath. S. rostrata, besides root nodulation, is unique for its profuse stem nodulation, with 4000 to 5000 nodules on a 3 m stem (IITA, 1983), making it a promising species for hedgerow intercropping.

Both S. rostrata and S. bispinosa are tolerant of waterlogging, and so can be employed in association with swamp rice cultivation, either planted along bunds or as a short fallow crop (Tran Van Nao, 1983; Bhardwaj and Dev, 1985).

Zizyphus

Like Prosopis, this shrub of the semi-arid zone is mentioned in Indian scriptures. It is valued particularly as fodder, and a monograph by Mann and Saxena (1981) does not specifically mention soil fertility. However, foliage analyses show a quite high and balanced nutrient content which, coupled with its deep rooting habit, could make it a potentially useful species from a soil fertility viewpoint if not harvested for fodder.

Table 21. Soil nutrient content beneath Prosopis spp.. North-west India (Aggarwal, 1980).

	Depth (cm)	Available nutrients (kg/ha)		
		N	P	K
Prosopis cineraria	0-15	250	22.4	633
Prosopis juliflora	"	250	10.3	409
Open field	"	203	7.7	370
Prosopis cineraria	15-30	193	10.3	325
Prosopis juliflora	"	212	4.5	258
Open field	"	196	4.0	235

8.3 What makes a good soil-improving tree?

The question of which properties of a tree or shrub make it desirable from the point of view of soil fertility has not yet been fully answered. The properties already recognized are nitrogen fixation and, with reference to reclamation forestry, a high biomass production and good potential for erosion control. It would be valuable to have guidelines on this question, as a means of identifying naturally-occurring species with a potential for use in agroforestry.

The following is not a list of properties desirable in agroforestry in general but concerns only those which are specific to soil fertility.

The properties which are likely to make a woody perennial suitable for soil fertility maintenance or improvement are:

1. A high rate of nitrogen fixation.
2. A high above-ground biomass production.
3. A dense network of fine roots, either with abundant feeder roots or a capacity for mycorrhizal association.
4. The existence of some deep roots.
5. A moderate to high, balanced, nutrient content in the foliage.
6. An appreciable nutrient content in the root system.
7. Either rapid litter decay, where nutrient release is desired, or a moderate rate of litter decay, where soil cover for protection against erosion is desired.
8. Absence of toxic substances in the foliage or root exudates.
9. For soil reclamation or restoration, a capacity to grow on poor soils.

It would be desirable to set standards, as to what constitutes "high", "dense," etc. for major climatic zones. Tables 13, 15, 16 and 17 provide some comparative data.

The main interaction with management, leading to a reservation over whether a high nutrient content in the above-ground biomass is desirable, lies in which parts of the tree are removed as harvest. For whatever parts are returned to the soil, whether as litter, prunings, partial return from harvest (e.g. wood shavings and bark) or via manure, a high nutrient content is desirable. But for those parts which are fully and permanently harvested, then the lower the nutrient content, the less adverse to soil fertility. This applies inter alia to N-fixing species, which can ever have a net negative effect on soil nitrogen if the fixed nitrogen stored in the plant tissues is harvested.

This is particularly important for trees which are high in specific elements. If, for example, a tree is found to be a calcium accumulator, then this calcium has necessarily been taken from the soil. If all plant litter reaches the soil, this could be beneficial, some of it being taken up from deep soil horizons and recycled to the surface; but if all above-ground parts are harvested, then the effect is to deplete the soil calcium.

Rate of litter decay has been discussed in Section 4.6. If most litter falls, or pruning is done, in the dry season, and if annual plants are being intercropped, then rapid litter decay ensures nutrient release at the important time of early growth. There is a causal link in that litter with a high nitrogen content is more likely to decay rapidly. For protection against erosion, soil cover is important, and hence a slower rate of leaf decay is desirable.

9 SOIL FERTILITY UNDER AGROFORESTRY SYSTEMS

9.1 General

The analytical approach to soil fertility under agroforestry adopted in Chapters 3-8 is only a means to an end. What matters are the effects of agroforestry systems as a whole upon soil properties, and thereby the sustainability of those systems.

It should be said at the outset that there are very few studies yet available which cover nutrient cycling and/or soil monitoring under agroforestry systems, linked with control plots under agriculture. The main groups of work to date are the experimental studies of hedgerow intercropping conducted at IITA, Ibadan, Nigeria, and the group of nutrient cycling studies carried out on plantation crop combinations in Costa Rica and other Central American countries. Apart from these, results are sparse. The few trials for which data are available are mostly at an early stage, and a consequence of soil microvariability, results are usually not statistically significant.

This situation could change markedly in 5-7 years time. A large number of agroforestry system trials have recently been started or are planned to commence, in which it is to be hoped that nutrient cycling and soil monitoring will be carried out.

Hence the following notes necessarily contain many statements which are qualitative, or plausible hypotheses. Some are sufficiently well-established for the practices concerned to be adopted by farmers, but rather few have been demonstrated by accepted standards of scientific proof.

9.2 Soil fertility aspects of indigenous agroforestry systems

A starting point is to consider the apparent role of soil fertility in indigenous agroforestry systems. The ICRAF Agroforestry Systems Inventory contains records of some 200 systems, of which 25 have so far appeared as published full descriptions (Nair,1984-8, 1987b).

The descriptions are listed in Table 22, with the practices that occur classified according to Table 4. They are not the result of a sampling procedure, but the balance of practices is nevertheless of interest. Of the 42 examples of practices, 30 have a spatial mixed arrangement of the tree component, or over 70% of the total, compared with 6 examples, or 15%, that have a spatial zoned arrangement. The most widely-represented practices are tree gardens (9), trees on cropland (7) and plantation crop combinations (6), followed by two sylvopastoral practices, trees on pastures (5) and plantation crops with pastures (3). The leading spatial zoned system is boundary planting (3). It seems that farmers, unlike scientists, prefer their trees to be randomly spaced!

The last column shows the degree of emphasis on soils aspects, as E, e = erosion control, F, f = soil fertility, and R, r = reclamation or use of poor soils. Lower-case letters denote a brief mention, capitals indicate that the aspect is described as a feature of importance. 17

Table 22. Soil aspects in the ICRAF agroforestry systems inventory. Only the more widely-represented practices are listed. For soil aspects, small letters indicate brief mention only. Based on Nair (1984-8). For references, see Agroforestry System Descriptions 1-26 in the ICRAF Publications List.

Components		Arrangement		Soil aspects	
AS	Agrosylvicultural	R	Rotational	E,e	Erosion control
SP	Sylvopastoral	SM	Spatial mixed	F,f	fertility
ASP	Agrosylvopastoral	SZ	Spatial zoned	R,r	Reclamation or use of poor soils
T	Trees predominant			A,a	Adverse effects

AFSD no.	Country	Agroforestry practices	Components present	Dominant spatial or temporal arrangement	Soil aspects
1,3	Tanzania	Home gardens	AS	SM	EF
2	Thailand	Taungya	AS	R	a
4	Nepal	Trees for soil conservation, on terraces;	AS	SZ	E
		boundary planting	AS	SZ	F,R
5	Paraguay	Trees on cropland	AS	SM	
6	Papua New Guinea	Plantation crop combinations	AS	SM	
7	Sri Lanka	Plantation crop combinations	AS	SM	e
8	Brazil	Plantation crops with pastures	SP	SM	
9	Papua New Guinea	Improved fallow;	AS	R	f
		plantation crop combinations	AS	SM	
10	Venezuela	Plantation crop combinations;	AS	SM	
		trees on pastures	SP	SM	
11	Brazil	Trees on cropland	AS	SM	e,f
		Trees on pastures	AS	SM	
12	South Pacific Islands	Plantation crop combinations;	AS	SM	
		improved fallow;	AS	R	
		plantation crops with pastures;	SP	SM	
		home gardens	AS	SM	
13	Brazil	Plantation crop combinations	AS	SM	
14	Malaysia	Plantation crops with pastures	SP	SM	f
15	India (Tamil Nadu)	Trees on cropland;	AS	SM	F,R
		boundary planting;	AS	SZ	
		windbreaks	AS	SZ	
16	Sudan	Trees on cropland;	AS	SM	f
		trees on pastures	SP	SM	

Table 22 (continued)

17	Ethiopia	Trees on cropland	AS	SM	F
18	India (Kerala)	Home gardens	ASP	SM	f
19	Rwanda	Trees on cropland;	AS	SM	E,F
		boundary planting;	AS	SZ	
		home gardens;	AS	SM	
		multipurpose woodlots;	T	-	
		(plus improved fallow, alley cropping, conservation on trial basis)			
20	Kenya	Taungya	AS	R	
21	Indonesia (Sumatra)	Multistorey tree gardens	AS	SM	E,F
22	India (north-west)	Trees on cropland;	AS	SM	E,F,R
		trees on pastures;	SP	SM	
		windbreaks;	AS	SZ	
		reclamation	T	-	
23	Sri Lanka	Home gardens	AS	SM	e
24	Nigeria	Home gardens	ASP	SM	F
25	Bangladesh	Home gardens	AS	SM	
26	Spain	Trees and pastures	ASP	SM	F

descriptions refer to favourable effects upon soils, of which 10 describe this as an important feature; for fertility alone, the corresponding figures are 16 and 9. Only one description refers to adverse effects on soils, a statement that tree-crop competition for soil resources contributes to crop yield decline under taungya in Thailand.

It can be concluded that, for all the lack of "scientific proof", maintenance of soil fertility is an identified feature of a substantial proportion of indigenous agroforestry systems.

Soil productivity aspects of eight practices have previously been reviewed by Nair (1984): shifting cultivation, planted tree fallow, taungya, trees on cropland, plantation crop combinations, hedgerow intercropping, trees for soil conservation, and windbreaks, with shorter notes on some other practices. A review of South American agroforestry systems, with discussion of soil fertility, is given by Hecht (1982).

9.3 Soil fertility under agroforestry practices

9.3.1 Rotational practices

Shifting cultivation

Shifting cultivation is the earliest and still the most widespread practice of agroforestry. There have been many case studies and reviews of the restoration of soil fertility by natural fallows, classics among which are studies based on forest in Zaire (Bartholemew et al., 1953) and the forest and savanna zones of West Africa (Greenland and Nye, 1959; Nye and Greenland, 1960). An FAO (1974) symposium is also of particular value. For data on soil changes, some notable recent studies are:

North-east India	Ramakrishnan and Toky (1981) Mishra and Ramakrishnan (1983) Toky and Ramakrishnan (1983)
Nitrogen cycling, 4 sites	Gliessman et al. (1982)
Three Asian sites	Koopmans and Andriesse (1982) Andriesse and Koopmans (1984) Andriesse and Schelhaas (1985)
Thailand	Kyuma et al. (1985)
Zambia, chitemene in the savanna zone	Stromgaard (1985)
Peru	Szott et al. (1987c)

The basic findings are well known. Shifting cultivation is a sustainable system, provided that the fallow is long enough to restore soil conditions to the same state as in previous cultivation-fallow cycles. The relative lengths of cultivation and fallow are expressed as the R factor, and for any given combination of climate and soil there is a critical level for the ratio of cultivation to fallow, the soil rest period requirement (Section 2.4.1). If the actual R value rises above the rest period requirement, soil degradation occurs, becoming progressively worse in successive cycles. Estimates of the rest period requirement under low-input systems of agriculture are high

(Table 3), such as to make the continuation of shifting cultivation by traditional methods unrealistic under modern ratios of population to land. Savanna vegetation is less efficient at restoring fertility than forest.

The cycle of soil changes was formerly thought of as a progressive build-up of soil organic matter and nutrients during the fallow, corresponding to the increase in forest biomass. This is correct for carbon and nitrogen, but for other nutrients, much of the increase goes into the vegetation, and is only released to the soil upon clearance and burning. One study found that nitrogen did not decrease during cultivation, a result attributed to release through decomposition of residual tree trunks (Jordan et al., 1983).

An early attempt at improving shifting cultivation was the corridor system, in which the fallow is still natural forest regeneration, but the area cleared for cultivation is a belt along the contour, moving up the slope in successive years to produce contour-aligned belts of forest at different stages of regeneration (Jurion and Henry, 1969). Whilst achieving erosion control, this does not in itself change the rest period requirement and thus the sustainable population:land ratio. More radical attempts to improve shifting cultivation take it into the class of improved tree fallow, discussed below.

A related question is that of forest clearance, whether for shifting cultivation, annual cropping, perennial cropping or agroforestry. It is well established that manual methods of clearance (slash and burn) are better for soil properties (physical and chemical) than clearance by bulldozer; if mechanical clearance is economically necessary, cutting of trees close to the ground by a shear blade is as good or better than manual cutting. Burning causes loss of most (but not all) carbon, nitrogen and sulphur held in the tree biomass; it may also oxidize soil organic matter if the burn is very hot. If substantial parts of the vegetation are harvested, the stored nutrients are necessarily lost (Seubert et al., 1977; Andriesse and Koopmans, 1984; Mueller-Harvey et al., 1985; Lal et al., 1986; Kang and Juo, 1986).

A recent suggestion is to allow the forest biomass to decompose under a leguminous cover crop. This would be of great potential benefit to the soil, in avoiding the large loss of carbon and nitrogen that occurs in burning (von Uexkull, 1986). The effects of clearance on soils was the topic of a recent IBSRAM symposium.

A possible approach in agroforestry is that on clearance, belts of natural vegetation are left standing, producing shelterbelts by the reverse process to the normal one of planting them. This has attractions with respect to soil conservation, but its practicability has yet to be explored.

Improved tree fallow

Reasons for using a rotation of crops with planted trees, in place of colonization by natural vegetation, may be to obtain harvested products from the trees, improve the rate of soil amelioration, or both. To the extent that parts of the tree are harvested, as forage or fuelwood, the capacity for soil improvement will be reduced. The length of planned fallows was first discussed by Ahn (1979).

Long rotations of this kind are uncommon. Most examples are not simple alternatives of trees with crops, but involve an element of spatial intercropping. In an agrosylvopastoral system from Ecuador, two years of food crops are followed by eight years of a fallow consisting of *Inga edulis* interplanted with banana and a forage legume, the last being grazed by pigs, the litter from *Inga* being assumed to improve soil fertility (Bishop, 1982).

Early-stage data from Peru show that biomass production from *Inga* overtakes that of herbaceous fallows and equals or exceeds natural forest (Szott et al., 1987b).

In the *Acacia senegal* system of the Sudan, trees are interplanted with food crops, and crop production continued for four years. This is followed by some 16 years during which the trees are tapped for gum arabic and soil fertility builds up (M.M. Ballal, personal communication).

Short, sub-annual, tree fallows are also possible. Tree fallows amid rice were a traditional practice in north Viet Nam (Tran Vao Nao, 1983). In north-west India, *Sesbania cannabina*, grown under irrigation for 65 days between wheat and rice crops, added 7300 kg DM/ha and 165 kg N/ha (Bhardwaj and Dev, 1985).

A question of fundamental importance for agroforestry design is the relative efficiency in soil improvement of a rotational tree fallow and a spatial, concurrent, arrangement of trees. Most observed rotational tree fallows occupy well over 50% of time in the tree-crop cycle, a ratio that would be economically unacceptable as a ratio of areas in space. The SCUAF computer model currently produces an almost identical result (Figure 12), but there may be factors not yet built into the model which render this result false. The apparent success of hedgerow intercropping, in which the tree cover is generally below 35%, suggests a greater efficiency for spatial systems.

There is no direct information on this basic question. Research stations should set up controlled trials, in which the effects on soils of the same tree species, management and tree:crop ratio are compared. This is most simply done by planting a rotational fallow adjacent to hedgerow intercropping trials.

Rather than simply alternate trees with crops, the most valuable systems are likely to be those that combine intercropping with rotation. Possibilities of the kind are discussed by Prinz (1986).

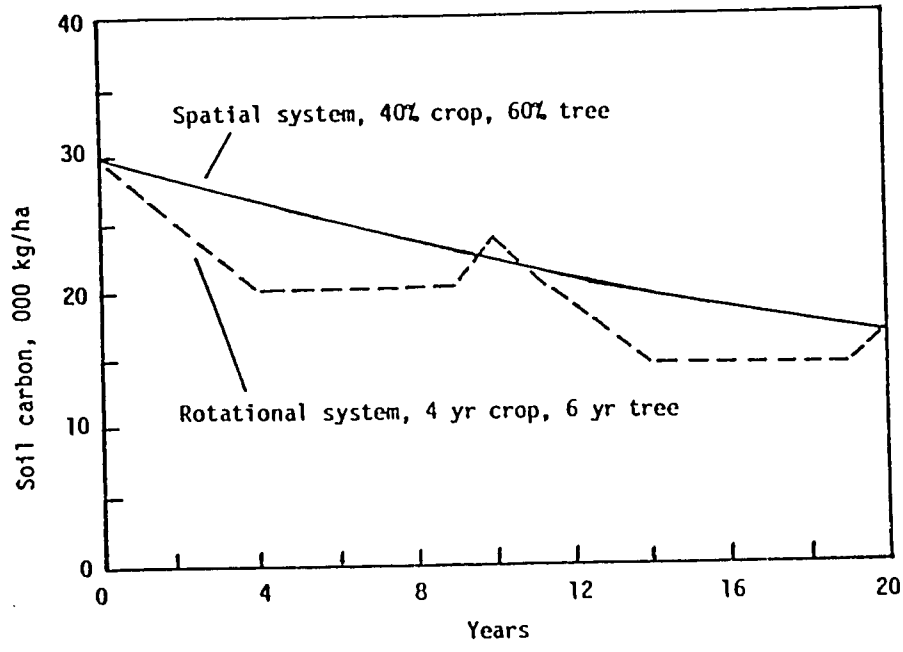

Figure 12. Modelled soil carbon changes under rotational and spatial systems with equal tree-crop ratios.

Taungya

In the taungya practice, food crops are either grown in rotation with commercial timber trees, or interplanted during the first few years of tree establishment. No-one supposes that this is very desirable as regards soil fertility. Many forestry trees do not leave the soil in good condition after felling, and food crop yields are fairly low. Conversely, it is suspected that annual crops may compete for nutrients with the newly-planted trees. In Kenya, under the sequence montane forest-food crops-plantation forestry (Vitex, Cupressus, Pinus patula, Grevillea), soil carbon and phosphorus was substantially lower under the plantation than the forest; it was assumed that the fall in fertility occurred during the cropping period, but no samples were taken at the period needed to test this (Robinson, 1967). Studies of soil changes under plantation forestry are relevant (Lundgren, 1978; Adlard and Johnson, 1983).

The taungya practice appears to be neutral to adverse from a soils viewpoint, becoming seriously undesirable only if substantial erosion is allowed to occur.

9.3.2 Spatial mixed practices

Trees on cropland

Many kinds of trees are grown on cropland for productive purposes, without having any clear adverse affects on adjacent crops. A small number of species are planted or, more often, preserved in part for their beneficial effect on soils and crop yields - known by farmers and in some cases demonstrated by scientists. Examples and evidence have been given in Sections 3.2 and 8.2: Acacia albida, A. senegal, Paulownia spp., and Prosopis cineraria. These are spatial open systems (as compared with the spatial dense systems such as home gardens).

Where such effects occur, it seems logical to augment them by increasing the tree density to something approaching a full canopy, or until light reduction counteracts the improvement in crop growth.

Tree gardens

Home gardens epitomize the qualities claimed for agroforestry systems; they are highly productive, fully sustainable and very practicable. They are a feature mainly of the humid to moist subhumid tropics (Fernandes and Nair, 1986).

The maintenance of soil fertility is achieved by a combination of inputs, particularly household waste, and a high level of recycling of organic matter and nutrients. The many species present lead to a large litter fall with a range of properties. A large biomass production by bamboos is a common feature. The multi-level root system may be a factor contributing to efficient nutrient recycling.

These features are so obvious that no-one has measured them. A nutrient cycling study of a home garden would be of interest in showing the magnitudes of nutrient flows and the degree of recycling. With less effort, a comparison of soil properties within home gardens and on adjacent agricultural land could be made. Can home gardens match the degree of closure in nutrient cycling and the physical and chemical soil conditions found under natural vegetation?

Multistorey tree gardens are an extension of the home garden structure to wider areas. Their effects on soils are likely to be less strongly favourable than home gardens, possibly comparable with those of plantation crop combinations.

Plantation crop combinations

Combinations of coffee or cacao with Erythrina, Inga, and Cordia form a widespread agroforestry system in Central America. It is also one of the only two agroforestry practices on which a substantial quantity of soils research exists. These are listed in Table 23.

The main trees included are Erythrina poeppigiana and other Erythrina species, Inga jinicuil and I. leptoloba, sometimes with bananas or fruit trees, and Albizia gummifera in the Ivory Coast study. The plantations may be fertilized. Erythrina is usually pruned regularly. Cordia allowed to grow into a mature tree before harvesting for timber. These are usually called "shade trees", but it is clear that their functions include soil amelioration. This role is recognized by farmers.

The salient results of these studies are:

i. Large quantities of biomass are returned to the soil, as litter and prunings, both from the coffee/cacao and trees. Giving values as kg DM/ha/yr:

Jimenez (1979)	Coffee alone	6 000
	Coffee + Inga	8 400-9 500
	Coffee + Inga, Musa	10 200
Bornemisza (1982)	Shade trees	4 600-13 100
Glover and Beer (1986)	Coffee + trees of which coffee c. half	16 000-17 000
Russo and Budowski (1986)	Erythrina: 2 pollardings per year	11 800
	1 pollarding per year	18 500
	including litter	22 700
Alpizar et al. (1986-7)	Cacao	7 000
	Cordia	10 400
	Cacao + Cordia	17 400
	Cacao	7 000
	Erythrina	9 400
	Cacao + Erythrina	16 400

Table 23. Soil studies of plantation crop combinations.

Reference	Country	System	Soil aspects
Jimenez and Martinez (1979)	Mexico	Coffee + Inga, fruits trees	Biomass
Aranguren et al. (1982)	Venezuela	Coffee + Erythrina, Inga	N cycle
		Cacao + Erythrina, Inga	"
Bornemizsa (1982)	Colombia	Coffee + Inga	Biomass, N cycle
Roskoski (1982)	Mexico	Coffee + Inga	N fixation
Roskoski and van Kessel (1982)	Mexico	Coffee + Inga	N fixation
Glover and Beer (1986)	Costa Rica	Coffee + Erythrina	Biomass, nutrient cycles
		Coffee + Erythrina, Cordia	" " "
Russo and Budowski (1986)	Costa Rica	Coffee + Erythrina	Biomass, nutrient cycles
Alpizar et al. (1986-7)	Costa Rica	Cacao + Erythrina	Biomass, organic matter and nutrient cycles
		Cacao + Cordia	
Loué (n.d.)	Ivory Coast	Coffee + Albizia gummifera	Leaf and soil nutrient differences

ii. There is substantial nitrogen fixation by Erythrina and Inga jinicuil. Giving values as kg N/ha/yr fixed:

Bornemisza (1982)	Inga jinicuil	40
Roskoski (1982)	"	47
Roskoski and van Kessel (1985)		35

iii. There is a large return of nutrients, especially but not nitrogen, to the soil in litter and prunings. Giving values as kg/ha/yr:

		N	P	K	Ca
Aranguren et al., (1982)	Coffee leaf	28			
	Trees leaf	78			
	Twigs, flowers, fruit (both)	66			
	Coffee + trees	172			
Glover and Beer (1986) (fertilized)	Coffee	148	8	88	87
	Trees	183	14	74	241
	Coffee + trees	331	22	162	328
Russo and Budowski (1986)	Erythrina poeppigiana	330	32	156	319

These nutrient returns are sometimes as high as rates of fertilizer application.

The Central American studies do not include monitoring of soil changes over time. It is, however, clearly implied that the soil is maintained in a stable and fertile condition. Aranguren et al. (1982) give values, for 0-20 and 20-30 cm respectively, of 5.3 and 4.1% carbon, which are similar to soils under natural vegetation for this climate.

For six sites in the Ivory Coast, Loué (n.d.) compared nutrient contents of coffee leaves and soils for plantations with and without Albizia gummifera shade trees. For coffee leaves, the average enrichment for shaded sites was 23% for N and 16% for P, whilst K showed wide variations. For soils, shaded plantations had slightly higher (non-significant) N and P, but were 46% lower in K, suggesting that Albizia draws potassium from the soil.

For the Central American plantation crop combinations, there are thus three clearly-established functions of the trees:

- nitrogen fixation;
- maintenance of organic matter through litter;
- a substantial contribution to a more closed nutrient system through uptake and recycling.

9.3.3. Spatial zoned practices

Hedgerow intercropping (alley cropping)

Hedgerow intercropping, commonly but less accurately called alley cropping, has aroused more current interest among scientists than any other agroforestry system. Well over half of all diagnosis and design studies have suggested it as an interaction to help solve land use problems. Among reasons, the potential for maintenance of soil fertility is usually cited, together with control of erosion on sloping land.

It is also one of two agroforestry practices on which substantial soils research has been done. Table 24 gives some published studies. Many more will appear as a result of trials recently started or planned.

The salient results from these studies are:

i. A large biomass production can be obtained from hedgerows, typically 2000-5000 kg DM/ha/yr in moist subhumid climates, up to 10 000 for humid climates. These values are per hectare of total land in the system.

ii. Large amounts of nitrogen can be fixed by hedgerows, e.g. 75-120 kg N/ha in six months by Leucaena (Mulongoy, 1986).

iii. Substatial quantities of nutrients are contained in hedgerow prunings, and can thus be added to the soil if the latter are not harvested.

		N	P	K
Agboola (1982)	Leucaena leucocephala	105	4	
	Gliricidia sepium	84	4	
	Tephrosia candida	118	7	
	Cajanus cajan	151	9	
Kang and Duguma (1985)	Leucaena leucocephala	200		
	Gliricidia sepium	140		
	Acioa barteri	29		
	Alchornia cordifolia	84		
Yamoah et al. (1986)	Gliricidia sepium	238	14	152
	Flemingia congesta	78	8	57
	Cassia siamea	186	20	100
Weerakoon and Gunasekera (1985)	Leucaena leucocephala	105	5	37
Jama et al. (1986)	Leucaena leucocephala	196		

It is noteworthy that the non-N-fixing species, Acioa and Alchornia nevertheless contain substantial nitrogen, as does a species that is

Table 24. Soil studies of hedgerow intercropping. "Crop yields" refers to effects on yield of addition or removal of hedgerow prunings.

Reference	Country	Hedgerow species	Soil aspects
A. At IITA, Ibadan			
Kang et al. (1981)	Nigeria	Leucaena leucocephala	Soil changes, crop yields; superseded by Kang et al. (1985)
Agboola (1982)	Nigeria	Leucaena leucocephala Gliricidia sepium, Tephrosia candida Cajanus cajan	Biomass, N and P in prunings
Kang and Duguma (1985)	Nigeria	Leucaena leucocephala Gliricidia sepium Acioa barteri Alchornia cordifolia	N in prunings
Kang et al. (1985)	Nigeria	Leucaena leucocephala	Soil changes, crop yields ,
Mulongoy (1986)	Nigeria	Leucaena leucocephala	N fixation, N in prunings, litter decompostion
Sumberg (1986)	Nigeria	Gliricidia sepium	Biomass
Wilson et al. (1986)	Nigeria	Leucaena Leucocephala Gliricidia sepium Acioa barterii Alchornia cordifolia	Nutrients in prunings, crop yields, litter decomposition
Yamoah et al. (1986a)		Gliricidia sepium Cassia siamea Flemingia congesta	Litter decomposition
Yamoah et al. (1986b)	Nigeria	As 1986a	Biomass, N, P, K in prunings, crop yields, roots

Table 24 (continued)

B. Other sites

De la Rosa (n.d.)	Philippines	Leucaena leucocephala	Crop yields
Weerakoon (1983)	Sri Lanka	Leucaena leucocephala Gliricidia maculata	Biomass, crop yields
Weerakoon and Gunasekera (1985)	Sri Lanka	Leucaena leucocephala	Biomass, nutrients in prunings, crop yields (rice)
Handawela (1986)	Sri Lanka	Gliricidia maculata	Soil properties, crop yields
Jama et al. (1986)	Kenya	Leucaena leucocephala	Biomass, nutrients in prunings, crop yields, soil changes (early stage)
Szott et al. (1987a)	Peru	Inga edulis Erythrina sp. Cajanus cajan Leucaena leucocephala*	Biomass, soil properties (early stage) *Rejected, poor survival and growth
Energy Development International (1987)	Kenya	Many species	Biomass, crop yield

probably non-fixing, Cassia siamea. Up to 30% of the nitrogen in prunings reaches the crop, the rest being lost by leaching and gaseous losses (Mulongoy, 1986). Thus the likely contribution to crop nitrogen uptake is about 30-80 kg N/ha/yr; using a common rule of thumb of multiplying by 10-15, this factor alone could raise cereal yields by 300-1200 kg/ha.

iii. Residues from prunings of most species used decompose rapidly. with corresponding release of nutrients. There is a corresponding rapid evolution of mineral nitrogen. Leucaena has particularly rapid decomposition, releasing 50% of nutrients in the first 25 days.

iv. In many studies, both at Ibadan and elsewhere, there is at least one combination of hedgerow species and spacing in which crop yields are higher than on control plots without hedgerows. The Ibadan trials have consistently achieved this, and it is the case for at least one combination at most sites in a network of seven in different environments in Kenya (Energy Development International, 1987; Amare Getahun, personal communication). This is despite the fact that crop rows close to the hedgerow usually (but not always) show a fall-off in yields.

By contrast, many trials show a decrease in crop yield per unit of total area. This is sometimes compensated by the value (to the farmer or as cash) of the fodder and/or fuelwood produced.

Both increases and decreases in crop yield caused by hedgerows may be due to a variety of factors, microclimatic as well as soil, and no studies have yet appeared which attempt to isolate the various factors. This problem is very complex. A recent discussion, combining soils with other aspects, is given by Huxley (1986).

v. One study has indicated an apparent favourable effect on crop yields of hedgerow root systems, in that maize yields on plots with prunings removed were higher than on controls without hedgerows (Yamoah et al., 1982b).

vi. There has been one study only in which soil changes have been monitored over time, that of intercropping Leucaena with a maize-cowpea rotation (one crop of each per year) on a sandy soil under a moist subhumid climate at Ibadan (Kang et al., 1981, 1985). Soils on plots with prunings applied to the soil were compared with those with hedgerows but with prunings removed (but no data are given for soil changes under crops only).

Some results are given in Table 25. Application of prunings led to higher organic matter, K, Ca and Mg, and substantially improved the available water capacity. There were no differences in P. Soil organic matter was maintained over six years. compared with a decline where prunings were removed. These changes in organic matter have been modelled on SCUAF (Young et al., 1987, pp. 44-47). Although the data may not be fully comparable, K levels appear to be maintained over time, and Ca levels to rise.

Table 25. Soil changes under hedgerow intercropping, Ibadan, Nigeria. Values are for unfertilized plots, soil depth 0-15 cm. Source: Kang et al. (1981, 1985).

Treatment	pH	Org.C	Exchangeable (meg/100g) K	Ca	Mg	Bray P ppm
Before H.I.	6.2	0.98	0.25	2.63	1.02	25
After 3 yr H.I., prunings removed	5.7	0.96	0.16	5.07	0.35	19
After 6 yr H.I., prunings removed	6.0	0.65	0.19	2.90	0.35	27
After 3 yr H.I., prunings retained	5.7	1.47	0.16	5.33	0.43	22
After 6 yr H.I., prunings retained	6.0	1.07	0.28	3.45	0.50	26

Other data are fragmentary. In the subhumid-zone of Sri Lanka, under an intercropping system with Gliricidia maculata at 5 m by 1 m, soil organic matter and nitrogen were better than on a control plot with maize only, and soil structure better (compressive strength lower) (Handawela, 1986). On the Kenya coast, early-stage results suggest an increase in C, P, K and Ca (Jama et al., 1987).

There are reasons for supposing that hedgerow intercropping systems can be designed which effectively control erosion, and thereby loss of nutrients in eroded soil (Young, 1986). No data are yet available.

Hedgerow intercropping presents many problems, not least those associated with the long tree-crop interface, the highest in any kind of agroforestry other than spatial dense practices (Young, in press). If hedgerows are 1 m wide and cropped alleys 4 m, the interface is 4000 m per hectare. If soil, microclimatic or other interface effects are, on balance, favourable, then this is a good thing. If they are adverse in net effect, then alley cropping is unlikely to be successful. For the soil-based interactions alone, the above-ground effects are likely to be favourable to the crops, through nutrient additions from litter. Below-ground effects could be beneficial, through addition of organic matter and nutrients in root residues, or adverse, through hedgerow competition with crops for nutrients. Little is known about this position.

Favourable effects on crop yields are most likely to occur in systems in which hedgerow prunings are applied to the soil. If they are harvested, effects will necessarily be much smaller, although roots may provide some benefits.

Most trials to date have been in humid to moist subhumid climates. However, performance in recently-commenced trials in the dry subhumid zone, such as at ICRISAT (Hyderabad, India) and ICRAF (Machakos, Kenya) is not unfavourable.

In summary, despite the fragmentary nature of the data, the hypothesis that alley cropping systems can be designed which maintain soil fertility as well as being productive remains a distinct possibility. If proven, it could make a very large contribution to sustainable agriculture in the tropics, both on sloping lands and on soils with low or declining fertility.

Boundary planting

Because of the relatively short tree-crop interface, effects on soils are likely to be small, and could be positive, neutral or negative. This is the kind of spatial arrangement in which to plant trees which are desired for production may be adverse to soil conditions.

Trees for erosion control

The spatial arrangements and functions of trees and shrubs for control of soil erosion have been discussed in Part I of this review (Young, 1986a). There are many opportunities for combining erosion control, which in itself is a means of maintaining of fertility, with other

effects of trees on fertility.

For trees planted on grass barrier strips, bunds and hedgerows, the contribution to soils from tree litter is likely to be small but positive. Grevillea robusta, Cassia siamea and Leucaena are commonly employed in this way.

In the case of barrier hedges, there is a close integration of erosion control and fertility maintenance. Erosion control is achieved not only by the barrier effect but by the litter cover of the prunings, which contribute equally to fertility. Leucaena is commonly employed.

The difference between barrier hedges and hedgerow intercropping is small. In the barrier hedge practice, the hedges are sown as a single line of very closely-spaced plants and erosion control is a primary objective. This permits very close spacing. In Malawi, there is a system in which Leucaena hedges alternate with maize rows, both at 1 m intervals. This is being adopted by farmers not only on steep slopes but as a means of fertilization on level ground.

Windbreaks and shelterbelts

Whilst intended primarily to control wind erosion, there is an apparent potential to make use of the soil fertility effects on trees in this practice---the spreading of leaf litter on crops being achieved by the wind! Modern practice is to design windbreaks of several tree and shrub species with differing shapes, which gives opportunity deliberately to include some of the known soil-improving species that occur in semi-arid areas, such as Acacia albida, other acacia species, Prosopis cineraria and Azadirachta indica. It appears possible, through imaginative design of windbreaks, to achieve erosion control, microclimatic amelioration and improved soil fertility, a combination of high potential value to the semi-arid zone.

Biomass transfer

This refers to the practice, found, for example, in Nepal, of cutting tree foliage from natural forest and carrying it onto cropland. Doubtless it improves yields, or farmers would not undertake the enormous labour involved. If associated with the cutting for fuelwood, there is likely to be degradation of forests.

9.3.4. Sylvopastoral practices

Trees on rangelands or pastures

Trees and shrubs contribute to sylvopastoral systems by direct provision of leaf fodder, and through improvement of pasture growth beneath them. The effect on pastures can arise from many causes, including microclimatic amelioration and the effects of animals (domestic or wild) and birds, but it certainly includes an element of soil improvement.

Those trees which benefit crop yields, such as Acacia albida and Prosopis cineraria, have an equal or, probably, greater effect on pastures. Acacias in general appear to improve pastures, at least

partly through nitrogen fixation. Evidence is provided by tree-soil transects under natural vegetation (Section 3.2).

Relevant in this respect is the finding that, within certain rainfall limits, the productivity of Sahelian pastures is limited not by water but availability of nitrogen and phosphorus (Penning de Vries and Krul, 1980).

The dehesa system of Spain and adjacent Mediterranean countries demonstrates complex interactions between trees, pastures, livestock and soils. Oaks (Quercus rotundifolia and other Quercus spp.) grow on rangelands, which are grazed by cattle, sheep, goats and pigs. There may be recurrent cereal cropping. Under oak canopies, both soil conditions and pasture growth are substantially better. Thus in Sevilla, Spain, soil organic matter, N, P and K were found to be about twice as high under trees than in adjacent pasture, N-mineralization higher, and Ca and Mg 1.5 times as high (Joffre et al., in press).

Such improvements in soils and pasture growth can be promoted through management only if there is opportunity to promote cover by selected tree species, either by planting or protection of natural seedlings against browsing of the growing shoot. Agroforestry in rangelands is unlikely to be successful unless applied in conjunction with basic principles of pasture management, such as control of livestock numbers and rotational grazing. Given socio-economic circumstances which allow such management, there is a clear potential for soil improvement through the use of trees.

Other sylvopastoral practices

Combinations of plantation crops with pastures, such as grazing under coconuts, are adopted primarily for purposes other than soil improvement, although a grass-legume ground cover can contribute to growth of the plantation tree through nitrogen fixation and recycling. The practices of live fences and fodder banks have no direct implications for soil fertility.

9.3.5 Practices with the tree component predominant

Woodlots with multipurpose management

This practice refers to planted forests which are managed with the intention of multiple production, for example forest grazing or tree fodder, possibly at the cost of not maximizing wood production. There is often an element of conservation in such areas, and the planting of trees which are desirable from the point of view of soil fertility should be among the aspects taken into account in design.

Reclamation forestry leading to multiple use

Like multipurpose windbreaks, this is another area of which the potential has been little explored. Reclamation forestry is a known and successful means of restoring areas of degraded soils, through the effects of the forest litter cover in checking erosion and building up soil organic matter and nutrient status.

There are opportunities to combine such reclamation with productive agroforestry, by a two-stage approach. In Stage I, reclamation, a complete forest cover is established and protected. In Stage II, controlled production with protection, management is modified in such a way as to maintain a sufficient degree of conservation but permit controlled production. The latter might include any combination of fuelwood, grazing, cut-and-carry grass or tree fodder, or even limited cultivation. Management measures to achieve this could consist of either a thinning of the tree cover or a selective clearance along contour-aligned strips. Such systems might be designed for reclamation of eroded soils, saline soils or sand dunes. Some of the trees planted for the reclamation stage could be selected with a view to their functions in the productive stage, for example nitrogen-fixing species which improved pasture growth.

9.3.6 Other practices

The practice of apiculture with forestry has no direct soils implications, whilst those of aquaforestry are highly specialized. Of the special aspects, irrigated agroforestry is one that has not yet been explored; irrigation frequently leads to an improvement in soil organic matter and fertility, through permitting greater biomass production.

9.4 Summary: effects of agroforestry practices on soil fertility

There is clear scientific evidence for beneficial effects upon soils of some systems of trees on cropland and plantation crop combinations. Although lacking evidence of this kind, there is no doubt that home gardens maintain soil fertility, and the labour input of farmers attests for the effectiveness of biomass transfer as a method of fertilization.

The limited available results suggest that, for a range of environments, it is possible to design systems of hedgerow intercropping which maintain soil fertility. Given that this is a new practice, further evidence, from nutrient cycling studies and soil monitoring, is needed before this can be taken as proven.

For the practice of trees for erosion control, large improvements to soil fertility arise from the reduction in losses of organic matter and nutrients. In the case of barrier hedges there is an additional direct improvement to fertility through decomposition of prunings.

For the system of trees on rangeland or pastures, there is clear evidence that some trees promote pasture growth beneath them and that this leads to, or is associated with, improved soil fertility.

A tentative grouping of agroforestry practices according to their effects on soil fertility is as follows:

Practices with substantial positive effects on soil fertility:

Improved tree fallow
Trees on cropland
Plantation crop combinations
Home gardens
Hedgerow intercropping
Trees for erosion control
Windbreaks
Biomass transfer
Trees on rangeland or pastures
Woodlots with multipurpose management
Reclamation forestry leading to multiple production

Practices with smaller positive or neutral effects on soil fertility:

Boundary planting
Plantation crops with pastures

Effects on soil fertility may be positive or negative:

Shifting cultivation

Effects on soil fertility may be neutral or negative:

Taungya

Soil fertility aspects specialized or not relevant:

Apiculture with forestry
Aquaforestry

9.5 Design, management and integration

"And as we reaped, we used to sing."
(eagerly) "What songs did you sing?"
"Songs don't matter. It were the singin' as counted."

Interview between an elderly English farm labourer and an enthusiastic young sociologist, about conditions c. 1900.

As in all branches of agriculture and forestry, sound design and good management of an agroforestry system matter as much or more than the nature of the practice itself. The presence of trees does not necessarily control erosion nor maintain soil fertility; what matters is the way they are arranged and managed.

This applies with greatest force to practices that are new. It is certainly possible to conceive of a hedgerow intercropping system which depressed crop production, failed to provide compensating products from the hedgerows, and neither controlled soil erosion nor sustained fertility.

For any projected intervention of agroforestry into an existing land use system, sound design is the first essential. The detailed techniques set out in the design stage of agroforestry diagnosis and design are intended for this purpose (Huxley and Wood, 1984; Raintree, 1986). Plant selection and system design in relation to local conditions of climate, soil and slope is one important aspect. Specifically from a soil fertility aspect, consideration must be given to which parts of the trees and crops are harvested and which returned to the soil, with production being balanced against soil amelioration.

The second essential is that the system should be well managed, both from the basic aspect of maintenance and as regards flexible adaptation if failing performance indicates a need for change.

Agroforestry should not be treated in isolation, but as an element in the land use system as a whole. At the farm level, examples of imaginative integration are the approaches called conservation farming in Sri Lanka and integrated land use in Malawi. In conservation farming in Sri Lanka, elements include mulching, minimum tillage, measures for pest control, and agroforestry. In Malawi, trees are being introduced into farming systems gradually, with an initial emphasis on planting on marker ridges and other soil conservation structures (Weerakoon, 1983; Wijewardene and Waidyanatha, 1984; Douglas, 1986 and in press).

A wider question, peripheral to the present review, is that of integrating agroforestry with other kinds of land use at the scale of regional planning. In particular, there is a role for its soil conservation potential in watershed management. Watershed planning involves combining different kinds of land use, including agriculture, protective forestry and productive forestry, into a system that will conserve resources whilst remaining productive. There are exciting possibilities for enterprising land use planning, in which agroforestry plays a part in the overall combination of production with conservation of soil and water resources, a potential that as yet has been little explored.

10 RESEARCH INTO THE SOIL CONSERVATION POTENTIAL OF AGROFORESTRY

10.1 Conclusion: the potential

In the major previous review of soil productivity under agroforestry, Nair concluded that "The inclusion of compatible and desirable species of woody perennials on farmlands can result in a marked improvement in soil fertility ..... Agroforestry is only one potential approach to land use, which, if adopted properly, may prove superior to some other use approaches in some situations .... properly practised, the system is likely to use the nutrients more efficiently and cost-effectively, and to increase the sustainability of production from the land ... (However), the concepts have to be validated by field research before site-specific soil management practices can be recommended" (Nair, 1984, pp. 68, 69, 72).

In a review written concurrently with the present one, Sanchez set up what he called the basic soil-agroforestry hypothesis: "Appropriate agroforestry systems improve soil physical properties, maintain soil organic matter, and promote nutrient cycling." He concluded that, "while evidence exists for the beneficial effects on soils of certain agroforestry technologies (especially on more fertile soils), there is a tendency for over-generalization and extrapolation of soil productivity and sustainability benefits to other more marginal sites. The time has come to bring science into the picture and systematically test the effects of agroforestry systems on different soils, and vice versa" (Sanchez, 1987, pp. 206, 219).

The conclusion from the present study is similar to those of the two previous reviews, but differs in emphasis. Adding a potential to control soil erosion, the basic soil-agroforestry hypothesis may be re-stated as follows:

> Appropriate agroforestry systems have the potential to control erosion, maintain soil organic matter and physical properties, and promote efficient nutrient cycling.

The evidence reviewed here points to the conclusion that this hypothesis is essentially true. There is a considerable potential for maintenance of soil fertility by means of agroforestry, thereby making a major contribution to sustainable land use. This potential applies to the majority of agroforestry practices, and over a wide range of climatic zones and soil types.

The evidence available is of two kinds, direct and indirect. Direct evidence, based on studies of the effects of agroforestry systems upon soils, is at present sparse, but almost invariably supports the basic hypothesis. In addition, there is much indirect evidence, drawn from agriculture, forestry and soil science, of the beneficial effects of trees on soil fertility and the potential to make use of this capacity in agroforestry systems.

10.2 The need for research

The conjunction of a high apparent potential with a scarcity of experimental results points clearly and strongly to the need for research.

Research into soil fertility is a subject of great complexity and has many practical problems, such as that of soil variability. It would go beyond the aims of this review to discuss research design, methods and problems. It is hoped to make this the subject of a future ICRAF publication. As a source of methods, the handbook of the Tropical Soil Biology and Fertility programme deserves special mention (Anderson and Ingram, in press). Here, only the problems requiring attention will be indicated.

Research into soil fertility aspects of agroforestry can be conceived in two parts: specialized soil studies, and soil observations in general agroforestry research. It is important that soil studies should not be confined to specialized institutions. Given the importance of maintenance of fertility as a fundamental feature of most agroforestry systems, some basic soil observations should form part of all general-purpose agroforestry field trials.

10.3 Specialized soil research

In specialized research, soil fertility is the primary objective. It is carried out by soil scientists, at institutions possessing the necessary facilities. Some studies can be based on relatively straightforward methods of measurement, such as sampling and analysis, and require only good design and careful execution. Other aspects involve specialized techniques, for example isotope labelling.

The following problems require attention. In most cases, there is a need both for improvements in basic knowledge of the processes concerned, and for studies of their operation under trees and within agroforestry designs. "Trees" refers both to individual trees and shrubs, and to the tree component in agroforestry systems.

Soil organic matter: formation, decomposition, cycling, effects on fertility; role of herbaceous, woody and root residues in formation.
Nutrient cycling, especially efficiency of nutrient uptake and recycling by trees.
Soil erosion: functioning of factors and processes under tree-crop mixtures; barrier and cover functions.

Tree biomass production, litter quality and decomposition.
Root and mycorrhizal systems of trees, and their effects.
Effects of trees on soil physical properties.
Nitrogen fixation by trees.

Effects of specific tree species on soil properties. What constitutes a good soil fertility tree

Studies of soil fertility under agroforestry systems:
- organic matter;
- nutrient cycling;
- erosion;
- monitoring of soil change.

For only one subject, namely nitrogen fixation by trees, is the current research effort on a scale adequate to the needs.

10.4 Soil observations in general agroforestry research

A component of soils research should form part of most agroforstry field trials, other than those directed at special aspects. It is fundamental to establish whether any proposed design, which is satisfactory in other respects, maintains the soil in a stable and productive condition; and it is desirable also to gain some idea of the cycling of organic matter and nutrients.

The quanitity and degree of sophistication of the measurements taken will vary according to facilities available and the nature of the agroforestry system under study. The following are suggested as a basic minimum of observations:

1. Before setting out a trial, take soil samples from the site, on a statisically-based pattern, including from control plots, and have analyses carried out. After three years, resample on a stratified design, based on components of the system, e.g., beneath and outside trees in mixed systems, or within hedgerows and crop alleys in hedgerow intercropping systems. Repeat every three years, or when the trial is concluded.

   To reduce costs, only a proportion of the samples taken need be analyzed in the first instance, the rest being done if the initial data indicate a likelihood of significant results.

2. Measure biomass production from all elements of the system, tree and crop, and its partitioning between leaf, fruit and wood. If possible, carry out analyses of the nutrient content of tree leaves and, preferably, other plant parts.

3. Make some attempt, however basic, to estimate root production and distribution. The simplest method is to cut a trench across selected tree-crop interfaces in the system and plot root distribution and mass.

4. If the trial is on sloping land, make some attempt to measure the rate of erosion. Simpler methods exist if standard plots are not practicable, e.g. the Gerlach trough (Kirkby and Morgan, 1980, p.76). For samples taken from the eroded sediment, analyze organic matter and nutrient content.

Inclusion of such a set of basic soil observations in most trials could go far to provide, in 5-7 years time, the data needed to confirm, on the basis of scientific evidence, the potential of agroforestry for maintenance of soil fertility.

REFERENCES

Adlard, P. G. and J. A. Johnson, 1983. Annotated bibliography: biomass estimation, nutrient cycling and organic matter relations in forest stands. Oxford: Commonw. For. Inst..

Agamuthu, P. and W. J. Broughton, 1985. Nutrient cycling within the developing oil palm-legume system. Agric., Ecosys. Env. 13, 111-123.

Agboola, A. G., 1982. Organic manuring and green manuring in tropical agricultural production systems. Trans. 12th In . Congr. Soil Sci., Sym. Papers I, 198-222.

Aggarwal, R. K., 1980. Physico-chemical status of soils under "khejri" (Prosopis cineraria Linn.). In: Mann and Saxena (1980), q.v., 32-37.

Ahn, P. M., 1979. Optimum length of planned fallows. In: Mongi and Huxley (1979), q.v., 15-40.

Akbar, M. A. and P. C. Gupta, 1984. Nutrient composition of different cultivars of Leucaena leucocephala. Leucaena Res. Rep. 5, 14-17.

Alpízar, L., Fassbender, H. W., Heuveldop, J., Fölster, H. and G. Enríquez, 1986-7. Modelling agroforestry systems of cacao (Theobroma cacao) with laurel (Cordia alliodora) and poro (Erythrina poeppigiana) in Costa Rica. Parts I-III. Agrofor. Sys. 4, 175-190 and in press.

Anderson, J. M. and J. S. I. Ingram (eds), in press. TSBF methods handbook. Int. Union Biol. Sci..

Andriesse, J. P. and T. T. Koopmans, 1984. A monitoring study of nutrient cycles in soils used for shifting cultivation under various climatic conditions in tropical Asia. I. The influence of simulated burning on form and availability of plant nutrients. Agric., Ecosys. Env. 12, 1-16.

Andriesse, J. P. and R. M. Schelhaas, 1985. Monitoring project of nutrient cycling in soils used for shifting cultivation under various climatic conditions in Asia. Progress Rep. 3. Amsterdam: Roy. Trop. Inst..

Arangurem, J., Escalente, G. and R. Herrera, 1982. Nitrogen cycle of tropical perennial crops under shade trees. I. Coffee. II. Cacao. Plant Soil 67, 247-269.

Atkinson, D. et 4 al. (eds), 1983. Tree root systems and their mycorrhizas. The Hague, Nijhoff, 525 pp..

Baggio, A. and J. Heuveldorp, 1984. Initial performance of Calliandra calothyrsus Meissn. in live fences for the production of biomass. Agrofor. Sys. 2, 19-29.

Bartholemew, W. V., 1977. Soil nitrogen changes in farming systems in the humid tropics. In: Biological nitrogen fixation in farming systems of the humid tropics (ed. A. Ayanaba and P. J. Dent, Wiley, Chichester), 27-42.

Bartholemew, W. V., Meyer, J. and H. Laudelot, 1953. Mineral nutrient immobilization under forest and grass fallows in the Yangambi (Belgian Congo) re[illegible] Publ. INEAC Ser. Sci. 57, 27 pp..

Bernhard-Reversat, F., 1977. Recherches sur les variations stationelles des cycles biogéochimiques en forêt ombrophile de Côte d'Ivoire. Cah. ORSTOM, Ser. Pedol. 15, 175-189.

Bernhard-Reversat, F., 1982. Biogeochemical cycles of nitrogen in a semi-arid savanna. Oikos 38, 321-332.

Bernhard-Reversat, F., Huttel, C. and G. Lemee, 1975. Recherches sur l'écosystème de la forest subequatoriale de basse Côte-d'Ivoire. I-VII. Terre Vie 29, 169-264.

Bhardwaj. K. K. R. and S. P. Dev, 1985. Production and decomposition of Sesbania cannabina (Retz.) Pers. in relation to its effect on the yield of wetland rice. Trop. Agric. 62, 233-236.

Bishop, J. P., 1982. Agroforestry systems for the humid tropics east of the Andes. In: Amazonia. Agriculture and land use research (ed. S. B. Hecht, CIAT, Cali), 403-416.

Bond, G., 1976. The results of the IBP survey of root-nodule formation in non-leguminous angiosperms. In Nutman (1976), q.v., 443-474.

Bornemisza, E., 1982. Nitrogen cycling in coffee plantations. In: Robertson et al. (1982), q.v., 241-246.

Bowen, G. D., 1984. Tree roots and the use of nutrients. In: Nutrition of plantation forests (ed. G. D. Bowen and E. K. S. Nambiar, Acad. Press, London), 147-179.

Bowen, G. D., 1985. Roots as a component of tree productivity. In Cannell and Jackson (1985), q.v., 303-315.

Bray, J. R. and E. Gorham, 1964. Litter production in forests of the world. Adv. Ecol. Res. 2, 101-157.

Buck, M. G., 1986. Concepts of resource sharing in agroforestry systems. Agrofor. Sys. 4, 191-203.

Cannell, M. G. R., 1985. Dry matter partitioning in tree crops. In Cannell and Jackson (1985), q.v., 160-193.

Cannell, M. G. R. and J. E. Jackson (eds), 1985. Attributes of trees as crop plants. Abbots Ripton: Inst. Terr. Ecol., 592 pp..

Carlowitz, P. G. von, 1986a. Multipurpose tree and shrub seed directory. Nairobi: ICRAF, 265 pp..

Carlowitz, P. G. von, 1986b. Multipurpose tree yield data---their relevance to agroforestry research and development and the current state of knowledge. Agrofor. Sys. 4, 291-314.

Caudle, N. and C. B. McCants (eds), 1987. Tropsoils. Technical report 1985-1986. Raleigh, N. Carolina State Univ., 268 pp.

Cerri, C. E., Athie, D. and D. Sodrzeieski (eds), 1982. Proceedings of the regional colloquium on soil organic matter studies. Sao Paulo: CENA/PROMOCET, 254 pp..

Chagas, J. M., 1983. Effeitos da leucaena e de adubacão NPK sobre a cultura do feijão no cerrado. Revista Ceres 30, 481-485.

Charreau, C., 1975. Organic matter and biochemical properties of soil in the dry tropical zone of West Africa. FAO Soils Bull. 27, 313-335.

Charreau, C. and R. Fauck, 1970. Mise au point de l'utilization agricole des sols de la région de Séfa (Casamance). Agron. Trop. 25, 151-191.

Chijoke, E. O., 1980. Impact on soils of fast-growing species in lowland humid tropics. FAO For. Paper 21, 111 pp..

Clarkson, D. T., 1985. Factors affecting mineral nutrient acquisition by plants. Ann. Rev. Plant Physiol. 36, 77-105.

Coleman, D. C., 1976. A review of root production processes and their influence on soil biota in terrestrial ecosystems. In: The role of terrestrial and aquatic organisms in decomposition processes (ed. J. M. Anderson and A. MacFadyen, Blackwell, Oxford), 417-434.

Commonwealth Science Council, 1986. Amelioration of soils buy trees. CSC Tech. Publ. 190, 74 pp..

Cuenca, G., Aranguren, J. and R. Herrera, 1983. Root growth and litter decomposition in a coffee plantation under shade trees. In Atkinson (1983), q.v., 477-486.

Dalal, R. C., 1982. Organic matter content in relation to the period of cultivation and crop yields in some subtropical soils (Abstract). Trans. 12th Int. Congr. Soil Sci. 6, p. 59.

Dancette, C. and J. F. Poulain, 1969. Influence de l'Acacia albida sur les facteurs pédoclimatiques et les rendements des cultures. Sols Afr. 13, 197-239.

De la Rosa, n.d.. A study on the growth and yield of corn intercropped with varying population of giant ipil-ipil (Leucaena leucocephala) on a hillside. Thesis, Visayan State Coll. Agric., Philippines.

Domergues, Y. R., 1987. The role of biological nitrogen fixation in agroforestry. In Steppler and Nair (1987), q.v., 245-271.

Douglas, M., 1986. Some land use considerations in the amelioration of soils by trees. In Prinsley and Swift (1986), q.v., 166-172.

Douglas, M., in press. Integrated land use.

Dudal, R., 1986. Fertilizer management in the tropics (with special reference to ferralsols). Land Water 25, 28-33.

Energy Development International, 1987. Agroforestry in Kenya. EDI, Washington DC, 50 pp..

Ewel, J. et 9 al., 1982. Leaf area, light transmission, roots and leaf damage in nine tropical plant communities. Agroecosys. 7, 305-326.

Faassen, H. G. van and K. W. Smilde, 1985. Organic matter and nitrogen turnover in soils. In Kang and van der Heide (1985), q.v., 39-55.

FAO, 1979. A provisional methodology for soil degradation assessment. Rome: FAO, 84 pp..

FAO-UNESCO, 1974. FAO-UNESCO soil map of the world 1:5 000 000. Volume I. Legend. Paris: Unesco, 59 pp.. (Note: a revision is in preparation.)

Felker, P., 1978. State of the art: Acacia albida as a complementary permanent intercrop with annual crops. Riverside, Cal.: Univ. Cal., Report to US AID, 133 pp..

Felker, P. et 4 al., 1983. Biomass production of Prosopis species (mesquite), Leucaena, and other leguminous trees grown under heat/drought stress. For. Sci. 29, 592-606.

Fernandes, E. C. M. and P. K. R. Nair, 1986. An evaluation of the structure and function and tropical home gardens. Agrofor. Sys. 21, 279-310. Reprinted as ICRAF Reprint 34.

Fogel, R., 1980. Mycorrhizae and nutrient cycling in natural forest ecosystems. New Phytol. 63, 199-212.

Fogel, R., 1985. Roots as primary producers in below-ground ecosystems. In: Ecological interactions in soil (ed. A. H. Fitter, Blackwell, Oxford), 23-36.

Ford, G. W. and D. J. Greenland, 1968. The dynamics of partly humified organic matter in some arable soils. Trans. 9th Int. Congr. Soil Sci. 2, 403-410.

Ford, G. W., Greenland, D. J. and J. M. Dades, 1969. Separation of the light fraction from soils by ultrasonic dispersion in halogenated hydrocarbons containing a surfactant. J. Soil Sci. 20, 291-296.

Fox, R. L., Yost, R. S., Sandy, N. A. and B. T. Kang, 1985. Nutritional complexities associated with pH variables in tropical soils. Soil Sci. Soc. Am. J. 49, 1475-1480.

Frissel, M. J. (ed.), 1977. Cycling of mineral nutrients in agricultural ecosystems. Agro-Ecosys. 4, 1-354.

Frissel, M. J. and J. A. van Veen, 1982. A review of models for investigating the behaviour of nitrogen in soil. Phil. Trans. Roy. Soc. B296, 341-349.

George, M., 1982. Litter production and nutrient return in Eucalpytus hybrid plantations. Indian For. 108, 253-260.

Gibson, A. H., Dreyfus, B. L. and Y. R. Dommergues, 1982. Nitrogen fixation by legumes. In: Microbiology of tropical soils and plant productivity (ed. Y. R. Dommergues and M. G. Diem, Nijhoff, The Hague), 37-73.

Gill, H. S. and I. P. Abrol, 1986. Salt affected soils and their amelioration through afforestation. In Prinsley and Swift (1986), q.v., 43-56.

Gliessman, S. R., Lambert, J. D. H., Arnason, J. T. and P. A. Sanchez, 1982. Report of the work group shifting cultivation and traditional agriculture. In Robertson et al. (1982), q.v., 389-394.

Glover, N. and J. Beer, 1986. Nutrient cycling in two traditional Central American agroforestry systems. Agrofor. Sys. 4, 77-87.

Golley, F. B. and E. Medina (eds), 1975. Tropical ecological systems. Heidelberg: Springer, 398 pp..

Golley, F. B. et 4 al., 1975. Mineral cycling in a tropical moist forest ecosystem. Athens: Univ. Georgia, 248 pp..

Gonzalez A., M. A., and D. R. Sauerbeck, 1982. Decomposition of 14-C-labelled plant residues in different soils and climates of Costa Rica. In Cerri et al. (1982), q.v., 141-146.

Greenland, D. J., 1985. Nitrogen and food production in the tropics: contributions from fertilizer nitrogen and biological nitrogen fixation. In Kang and van der Heide (1985), q.v., 9-38.

Greenland, D. J. and P. H. Nye, 1959. Increases in the carbon and nitrogen contents of tropical soils under natural fallows. J. Soil Sci. 10, 284-299.

Grewal, S. S. and I. P. Abrol, 1986. Agroforestry on alkali soils: effect of some management practices on initial growth, biomass accumulation and chemical composition of selected tree species. Agrofor. Sys. 4, 221-232.

Gurumurti, K., Raturi, D. P. and H. C. S. Bhandari. 1984. Biomass production in energy plantations of Prosopis juliflora. Indian For. 110, 879-894.

Handawela, J., 1986. Effect of trees on upland annual agriculture in the low country dry zone of Sri Lanka. In Prinsley and Swift (1986), q.v., 145-154.

Harrison-Murray, R. S. and R. Lal, 1979. High soil temperatures and the response of maize to mulching in the lowland humid tropics. In Lal and Greenland (1979), q.v., 285-304.

Helal, H. M. and D. R. Sauerbeck, 1983. Method to study turnover processes in soil layers of different proximity to roots. Soil Biol. Biochem. 15, 223-226.

Hermann, R. K., 1977. Growth and production of tree roots: a review. In: The belowground ecosystem: a synthesis of plant-associated processes (ed. J. K. Marshall, Range Sci. Dept. Sci. Ser. 26, Col. State Univ., Fort Collins), 7-28.

Huck, M. G., 1983. Root distribution, growth, and activity with reference to agroforestry. In Huxley (1983), q.v., 527-542.

Hulugalle, N. R. and R. Lal, 1986. Root growth of maize in a compacted gravelly tropical alfisol as affected by rotation with a woody perennial. Field Crops Res. 13, 33-44.

Huttel, C., 1975. Root distribution and biomass in three Ivory Coast rain forest plots. In: Golley and Medina (1975), q.v., 123-130.

Huxley, P. A. (ed.), 1983. Plant research and agroforestry. Nairobi: ICRAF, 617 pp..

Huxley, P. A., 1985. The basis of selection, management and evaluation of multipurpose trees - an overview. In Cannell and Jackson (1985), 13-35.

Huxley, P. A., 1986. Rationalizing research on hedgerow intercropping---an overview. ICRAF Working Paper 40, 151 pp..

Huxley, P. A. and P. J. Wood, 1984. Technology and research considerations in ICRAF's "diagnosis and design" procedures. ICRAF Working Paper 26, 49 pp..

IAEA, 1977. Soil organic matter studies. Vols I and II. Vienna: Int. Atomic Energy Authority, 424 and 388 pp..

IAEA, in press. Proceedings of the Joint FAO/IAEA meeting, "Use of nuclear techniques in studying the roles of trees in restoring and maintaining soil fertility", Vienna, 1986.

Idessa, J., Ganry, F. and J. Gerdat, 1985. Nitrogen balance in some tropical agrosystems. In Kang and van der Heide (1985), q.v., 247-268.

IITA, 1983. Potential of Sesbania rostrata as a nitrogen source in alley cropping. IITA Res. Highlights 1983, 28-29.

ILCA, 1986. Mycorrhizae: can Africa benefit? Land Water 27, 3-4.

IRRI, 1984. Organic matter and rice. Int. Rice Res. Inst., Los Banos, 631 pp..

Jama, B., Amare Getahun, Ngugi, D. and B. Macklin, 1986. Leucaena alley cropping for the Kenya coast. In Prinsley and Swift (1986), q.v., 155-165.

Jenkinson, D. S., 1977. Studies on the decomposition of plant material in soil. V. The effects of plant cover and soil type on the loss of carbon from 14-C labelled ryegrass decomposing under field conditions. J. Soil Sci. 28, 424-434.

Jenkinson, D. S. and A. Ayanaba, 1977. Decomposition of Carbon-14 labeled plant material under tropical conditions. J. Soil Sci. Soc. Am. 41, 912-915.

Jenkinson, D. S. and J. H. Rayner, 1977. The turnover of soil organic matter in some of the Rothamsted classical experiments. Soil Sci. 123, 298-305.

Jiménez, A. E. and P. Martínez V., 1979. Estudios ecológicos del agrosistema cafatelero: II. Producción de materia organica en deferentas tipos de estructura. Biotica 4, 109-126.

Joffre, R, Vacher, J., De Los Llanos, C. and G. Long, 1988. The Dehesa: an agrosilvopastoral system of the Mediterranean region with special reference to the Sierra Morena area of Spain. Agrofor. Sys., in press.

Johnston, A. E., 1986. Soil organic matter, effects on soils and crops. Soil Use Management 2, 97-105.

Jones, M. J. and A. Wild, 1975. Soils of the West African savanna. Commonw. Bur. Soils Tech. Common. 55, 246 pp..

Jordan, C. F., 1982. The nutrient balance of an Amazonian rain forest. Ecology 63, 647-654.

Jordan, C. F. and G. Escalante, 1980. Root productivity in an Amazonian rain forest. Ecology 61, 14-18.

Jordan, C. et 6 al., 1982. The nitrogen cycle in a 'terra firme' rainforest on oxisol in the Amazon territory of Venezuela. In Robertson et al. (1982), q.v., 325-332.

Jordan, J. et 6 al., 1983. Nitrogen dynamics during conversion of primary Amazonian rain forest to slash and burn agriculture. Oikos 40, 131-139.

Kang, B. T. and B. Duguma, 1985. Nitrogen management in alley cropping systems. In Kang and van der Heide (1985), q.v., 269-284.

Kang, B. T. and A. S. R. Juo, 1986. Effect of forest clearing on soil chemical properties and crop performance. In Lal et al. (1986), q.v., 383-394.

Kang, B. T. and J. van der Heide (eds), 1985. Nitrogen management in farming systems in humid and subhumid tropics. Haren, The Netherlands: Inst. Soil Fertil., 361 pp..

Kang, B. T., Wilson, G. F. and L. Sipkens, 1981. Alley cropping maize (Zea mays L.) and leucaena (Leucaena leucocephala LAM) in southern Nigeria. Plant Soil 63, 165-179.

Kang, B. T., Wilson, G. F. and T. L. Lawson, 1984. Alley cropping. A stable alternative to shifting cultivation. Ibadan: IITA, 22 pp..

Kang. B. T., Grimme, H. and T. L. Lawson, 1985. Alley cropping sequentially cropped maize and cowpea with Leucaena on a sandy soil in southern Nigeria. Plant Soil 85, 267-277.

Kawahara, T., Kanazawa, Y. and S. Sakurai, 1981. Biomass and net production of man-made forests in the Philippines. J. Jap. For. Soc. 63, 320-327.

Kellman, M., 1980. Soil enrichment by neotropical savanna trees. J. Ecol. 67, 565-577.

Kirmse, R. D. and B. E. Norton, 1984. The potential of Acacia albida for desertification and increased productivity in Chad. Biol. Conserv. 29, 121-141.

Ladd, J. N. and M. Amato, 1985. Nitrogen cycling in legume-cereal rotations. In Kang and van der Heide (1985), q.v., 105-127.

Lal, R., 1980. Losses of plant nutrients in runoff and eroded soil. In Rosswall (1980), q.v., 31-38.

Lal, R. and D. J. Greenland (eds), 1979. Soil physical properties and crop production in the tropics. Wiley, Chichester, 551 pp..

Lal, R. and B. T. Kang, 1982. Management of organic matter in soils of the tropics and subtropics. Trans. 12th Int. Congr. Soil Sci., Symposia Papers I, 152-178.

Lal, R., Sanchez, P. A. and R. W. Cummings Jr (eds), 1986. Land clearing and development in the tropics. Rotterdam: Balkema, 462 pp..

Lamotte, M., 1975. The structure and function of a tropical savannah ecosystem. In: Tropical ecological systems (ed. F. B. Golley and E. Medina, Springer, Heidelberg), 179-222.

LaRue, T. A. and T. G. Patterson, 1981. How much nitrogen do legumes fix? Adv. Agron. 34, 15-38.

Lathwell, D. J. and D. R. Bouldin, 1981. Soil orgnaic matter and soil nitrogen behaivour in cropped soils. Trop. Agric. 58, 341-348.

Lieth, H., 1976. Biological productivity of tropical lands. Unasylva 28 (114), 24-31.

Lieth, H. and R. H. Whittaker (eds), 1975. The primary productivity of the biosphere. New York: Springer, 339 pp..

Lelong, F., Roose, E., Aubert, G., Fauck, R. and G. Pedro, 1984. Géodynamique actuelle de differents soils à végétation naturelle ou cultivés d'Afrique de l'ouest. Catena 11, 343-376.

Lim, M. T., 1985. Biomass and biomass relationship of 3.5 year-old open-grown Acacia mangium. Serdang, Malaysia: Faculty For., Univ. Pertanian Malaysia, Occas. Paper 2, 13 pp..

Loué, A., n.d.. Influence de l'arbre d'ombrage sur la nutrition du caféier. Lab. Chimie du Centre Rech. Agron. de Bingerville [Cote d'Ivoire], Contrib. 10, 255-259.

Lundgren, B., 1978. Soil conditions and nutrient cycling under natural and plantation forests in Tanzanian highlands. Rep. For. Ecol. For. Soils 31. Uppsala: Swedish Univ. Agric. Sci., 429 pp..

Lyman, J. and J. L. Brewbaker (eds), 1982. Matrix of priority nitrogen-fixing tree species by use and ecology. NFTA: 82-05. In: Resource documents on nitrogen-fixing trees (ed. J. Lyman and J. L. Brewbaker, Nitrogen-fixing Tree Assoc., Hawaii), 21-27.

MacDicken, K. G. and J. L. Brewbaker, 1984. Descriptive summaries of economically important nitrogen fixing trees. Nit. Fixing Tree Res. Rep. 2, 46-54.

McMurtrie, R. E., 1985. Forest productivity in relation to carbon partitioning and nutrient cycling: a mathematical model. In Cannell and Jackson (1985), q.v., 195-207.

Mann, H. S. and S. K. Saxena (eds), 1980. Khejri (Prosopis cineraria) in the Indian desert---its role in agroforestry. Jodhpur: CAZRI Monogr. 11, 77 pp..

Mann, H. S. and S. K. Saxena, 1981. Bordi---Zizyphus nummularia. A shrub of the Indian arid zone. Jodhpur: CAZRI, 96 pp..

Mellilo, J. M. and J. R. Gosz, 1983. Interactions of biogeochemical cycles in forest ecosystems. In: The major biogeochemical cycles and their interactions (ed. B. Bolin and R. B. Cooke, SCOPE Rep. 21, Wiley, Chichester), 177-222.

Miehe, S., 1986. Acacia albida and other multipurpose trees on the Fur farmlands in the Jebel Marra highlands, wester Darfur, Sudan. Agrofor. Sys. 4, 67-119.

Mishra, B. K. and P. S. Ramakrishnan, 1983. Slash and burn agricuture at higher elevations in north-western India. I and II. Agric. Ecosys. and Env. 9, 83-96.

Mishra, C. M., Srivastava, R. J. and S. L. Singh, 1986. Pattern of biomass accumulation and productivity of L. leucocephala var K-8 under different spacing. Ind. For. 112, 743-746.

Mongi, H. O. and P. A. Huxley (eds), 1979. Soils research in agroforestry. Nairobi: ICRAF, 584 pp..

Mueller-Harvey, I., Juo, A. S. R. and A. Wild, 1985. Soil organic C, N. S and P after forest clearance in Nigeria: mineralization rates and spatial variability. J. Soil Sci. 36, 585-591.

Muiongoy, K., 1986. Nitrogen cycling in alley cropping systems. IITA Res. Briefs 7(4), 3-5.

Murphy, P. G. 1975. Net primary productivity in tropical terrestrial ecosystems. In Leith and Whittaker (1975), q.v..

Nair, P. K. R., 1984. Soil productivity aspects of agroforestry. Nairobi: ICRAF, 85 pp..

Nair, P. K. R., 1984-88. Agroforestry system descriptions, 1-26. First published in the journal, Agroforestry Systems, and reprinted in the series, Agroforestry System Descriptions, ICRAF, Nairobi. For details, see ICRAF Publications List.

Nair, P. K. R., 1985. Classification of agroforestry systems. Agrofor. Sys. 3, 97-128. Reprinted as ICRAF Reprint 23.

Nair, P. K. R., 1987a. Soil productivity under agroforestry. In: Agroforestry: realities, possibilities and potentials (ed. H. L. Gholz, Nijhoff/ICRAF, Dordrecht), 21-30.

Nair, P. K. R., 1987b. Agroforestry systems inventory. Agrofor. Sys. 5, 301-318.

Nair, P. K. R. (ed.), 1988. Agroforestry systems in the tropics. The Hague: Nijhoff (in press).

National Research Council, 1983. Calliandra: a versatile small tree for the humid tropics. Wash. DC: Nat. Acad. Press, 52 pp..

National Research Council, 1984. Casuarinas: nitrogen-fixing trees for adverse sites. Wash. DC: Nat. Acad. Press, 118 pp..

Neumann, I. F., 1983. Use of trees in smallholder agriculture in tropical highlands. In: Environmentally sound agriculture (ed. W. Lockeretz, Praeger, New York), 351-376.

Nutman, P. S., 1976. IBP field experiments on nitrogen fixation by nodulated legumes. In: Symbiotic nitrogen fixation in plants (ed. P. S. Nutman, Cambridge Univ. Press, London), 211-237.

Nye, P. H., and D. J. Greenland, 1960. The soil under shifting cultivation. Commonw. Bur. Soils Tech. Commun. 51, 144 pp..

Parker, G. G., 1983. Throughfall and stemflow in the forest nutrient cycle. Adv. Ecol. Res. 13, 57-133.

Paul, E. A. and J. A. van Veen, 1978. The use of tracers to determine the dynamic nature of soil organic matter. Trans 11th Int. Congr. Soil Sci. III, 61-102.

Penning de Vries, F. W. T. and J. M. Krul, 1980. Productivity of Sahelian rangelands in relation to the availability of nitrogen and phosphorus from the soil. In Rosswall (1980), q.v., 95-113.

Piccolo, A., 1986. Soil humus in the tropics. Extraction and characterization. Land Water 25, 16-19.

Pieri, C., 1983. Nutrient balances in rainfed farming systems in arid and semi-arid regions. Proc. 17th Colloq. Int. Potash Inst. Bern, 181-209.

Pieri, C., 1985. Bilans minéraux de systèmes de cultures pluviales en zones arides et semi-arides. Agron. Trop. 40-41, 20 pp..

Poore, M. E. D. and C. Fries, 1985. The ecological effects of eucalyptus. FAO For. Paper 59, 87 pp..

Poschen, P., 1986. An evaluation of the Acacia albida-based agroforestry practices in the Hararghe Highlands of eastern Ethiopia. Agrofor. Sys. 4, 129-143.

Pound, B. and L. M. Cairo, 1983. Leucaena: its cultivation and uses. London: Overseas Devel. Admin., 287 pp..

Prinsley, R. T. and M. J. Swift (eds), 1986. Amelioration of soil by trees. A review of current concepts and practices. London: Commonw. Sci. Co., 181 pp..

Prinz, D., 1986. Increasing the productivity of smallholder farming systems by introduction of planted fallows. Plant Res. Devel. 24, 31-56.

Proctor, J., 1984. Tropical forest litterfall. II. The data set. In: Tropical rain-forest: the Leeds symposium, 83-113.

Radwanski, S. A., 1969. Improvement of red acid sands by the neem tree (Azadirachta indica) in Sokoto, North-Western State of Nigeria. J. Appl. Ecol. 6, 505-511.

Radwanski, S. A. and G. E. Wickens, 1967. The ecology of Acacia albida on mantle soils in Zelingei, Jebel Marra, Sudan. J. Appl. Ecol. 4, 569-579.

Radwanski, S. A. and G. E. Wickens, 1981. Vegetative fallows and potential value of the neem tree (Azadirachta indica) in the tropics. Econ. Bot. 35, 398-414.

Ramakrishnan, P. S., in press. Nutrient cycling in forest fallows in India. Paper presented to a conference on mineral nutrient cycling in tropical forest and savanna ecosystems, Stirling.

Ramakrishnan, P. S. and O. P. Toky, 1981. Soil nutrient status of hill agro-ecosystems and recovery pattern after slash and burn agriculture (jhum) in north-eastern India. Plant Soil 60, 41-64.

Read, M. D., Kang, B. T. and G. F. Wilson, 1985. Use of Leucaena leucocephala (Lam. de Wit) leaves as a nitrogen source for crop production. Fertilizer Res. 8, 107-116.

Reichle, D. E. (ed.), 1981. Dynamic properties of forest ecosystems. IBP 23. Cambridge: Univ. Press, 683 pp..

Robertson, G. P., Herrera, R. and T. Rosswall (eds), 1983. Nitrogen cycling in ecosystems of Latin America and the Caribbean. The Hague: Nijhoff, 430 pp..

Robinson, J. B. D., 1967. The effects of exotic softwood crops on the chemical fertility of a tropical soil. E. Afr. Agric. For. J. 23, 175-191.

Rodin, L. E. and N. I. Basilevič, 1968. World distribution of plant biomass. UNESCO Nat. Resour. Res. 5, 45-52.

Roose, E., 1979. Dynamique actuelle de deux sols ferrugineux tropicaux indurés sous sorgho et sous savane soudano-sahélienne. Paris: ORSTOM, 123 pp..

Roose, E., 1980. Dynamique actuelle d'un soil ferallitique sablo-argileux très désaturé sous cultures et sous forêt dense humide équatoriale du sud de la Côte d'Ivoire. Paris: ORSTOM, 204 pp..

Roskoski, J. P., 1982. Nitrogen fixation in a Mexican coffee plantaiton. In Robertson et al. (1982), q.v., 283-292.

Roskoski, J. P. and C. van Kessel, 1985. Annual, seasonal and diel variation in nitrogen fixing activity by Inga jinicuil, a tropical leguminous tree. Oikos 44, 306-312.

Rosswall, T. (ed.), 1980. Nitrogen cycling in West African ecosystems. Stockholm: Roy. Swed. Acad./SCOPE, 450 pp..

Rosswall, T., 1984. Comments on nitrogen cycling in tropical ecosystems. Paper presented to tropical soil biology and fertility conference, Lancaster.

Rundel, P. W. et 6 al., 1982. Seasonal dynamics of nitrogen cycling for a Prosopis woodland in the Sonoran Desert. Plant Soil 67, 343-353.

Russo, R. O. and G. Budowski, 1986. Effect of pollarding frequency on biomass of Erythrina poeppigiana as a coffee shade tree. Agrofor. Sys. 4, 145-162.

Sanchez, P. A., 1976. Properties and management of soils in the tropics. New York: Wiley, 618 pp..

Sanchez, P. A., 1987. Soil productivity and sustainability in agroforestry systems. In Steppler and Nair (1987), q.v., 205-223.

Sanchez, P. A. and C. E. Russell, 1987. Contrasting effect of Pinus caribaea and Gmelina arborea on soil properties. In Caudle and McCants (1987), q.v., 29-30.

Sanchez, P. A., Palm, C. A., Davey, C. B., Szott, L. T. and C. E. Russell, 1985. Tree crops as soil improvers in the humid tropics? In Cannell and Jackson (1985), q.v., 327-258.

Sauerbeck, D. R., 1977. The turnover of organic matter in soils as traced by radiocarbon. J. Nuclear Agric. Biol. 6, 33-41.

Sauerbeck, D. R., 1983. Studies on the breakdown of plant residues in soils and the turnover of photosynthates in the rhizoshpere. In: Proc. Repub. China-Fed. Repub. Germany Seminar on Plant Nutrition and Soil Sci. (Nat. Sci. Co., Taipei, Taiwan), 147-155.

Sauerbeck, D. R. and M. A. Gonzalez, 1977. Field decomposition of carbon-14-labelled plant residues in various soils of the Federal Republic of Germany and Costa Rica. In IAEA (1977), q.v., 159-170.

Sauerbeck, D. R. and B. G. Johnen, 1977. Root formation and decomposition during plant growth. In IAEA (1977), q.v., 141-148.

Sauerbeck, D. R., Nonnen, S. and J. L. Allard, 1982. Consumption and turnover of photosynthates in the rhizosphere depending on plant species and growth conditions. (Abstract.) Trans. 12th Int. Congr. Soil Sci. 6, p.59.

Schnitzer, M., 1977. Recent findings in the characterization of humic substances extracted from soils from widely differing climatic zones. In IAEA (1977), q.v., 117-132.

Seubert, C. E., Sanchez, P. A. and C. Valverde, 1977. Effects of land clearing methods on soil properties of an ultisol and crop performance in the Amazon jungle of Peru. Trop. Agric. 54, 307-321.

Steppler, H. A. and P. K. R. Nair (eds), 1987. Agroforestry: a decade of development. Nairobi: ICRAF, 335 pp..

Stevenson, F. S., 1986. Cycles of soil. New York: Wiley, 380 pp..

Stocking, M., 1986. The cost of soil erosion in Zimbabwe in terms of the loss of three major nutrients. Consultant's Working Paper 3, Soil Conserv. Programme, AGLS. Rome: FAO, 164 pp..

Strongaard, P., 1985. Biomass, growth and burning of woodland in a shifting cultivation area of south central Africa. For. Ecol. Management 12, 163-178.

Sumberg, J. E., 1986. Alley farming with Gliricidia sepium: germplasm evaluation and planting density trial. Trop. Agric. 63, 170-172.

Swift, M. J. (ed.), 1984. Soil biological processes and tropical soil fertility: a proposal for a collaborative programme of research. Biol. Int. Spec. Issue 5, 38 pp..

Swift, M. J. (ed), 1985. Tropical soil biology and fertility (TSBF). Planning for research. Biol. Int. Spec. Issue 9, 24 pp..

Swift, M. J. and P. A. Sanchez, 1984. Biological management of tropical soil fertility for sustained productivity. Nature Resour. 20, 2-10.

Swift, M. J., J. W. Heal and J. M. Anderson, 1979. Decomposition in terrestrial ecosystems. Oxford: Blackwell, 372 pp..

Szott, L. T., Davey, C. B. and C. A. Palm, 1987a. Alley-cropping on ultisols. In Caudle and McCants (1987), q.v., 23-26.

Szott, L. T., Davey, C. B., Palm, C. A. and P. A. Sanchez, 1987b. Improved fallows. In Caudle and McCants (1987), q.v., 31-35.

Szott, L. T., Davey, C. B., Perez, J. and C. A. Palm, 1987c. Forest and soil regeneration. In Caudle and McCants (1987), q.v., 35-42.

Toky, O. P., and P. S. Ramakrishnan, 1982. Role of bamboo (Dendrocalamus hamiltonia Nus and Arn.) in conservation of potassium during slash and burn agriculture (jhum) in north-eastern India. J. Tree Sci. 1, 17-26.

Toky, O. P. and P. S. Ramakrishnan, 1983. Secondary succession following slash and burn agriculture in nroth-eastern India. I and II. J. Ecol. 71, 735-757.

Tran Van Nao, 1983. Agroforestry systems and some research problems. In Huxley (1983), q.v., 71-77.

Tsai, L. M. and M. B. Hazah, 1985. Biomass accumulation in naturally regenerating lowland secondary forest and an Acacia mangium stand in Sarawak. Pertanika 8, 237-242.

Turner, J. and M. J. Lambert, 1983. Nutrient cycling within a 27 year-old Eucalyptus grandis plantation in New South Wales. For. Ecol. Management 6, 155-168.

Uexkull, H. R. von, 1986. Efficient fertilizer use in acid upland soils of the humid tropics. FAO Fert. Plant Nutrition Bull. 10, 69 pp..

UNESCO, 1978. Tropical forest ecosystems. UNESCO Nat. Resour. Res. 14, 683 pp..

Virginia, R. A., Jenkins, M. B. and W. M. Jarrell, 1986. Depth of root symbiont occurrence in soil. Biol. Fertil. Soils 2, 127-130.

Vose, P., 1980. Introduction to nuclear techniques in agronomy and plant biology. Oxford: Pergamon, 391 pp..

Weerakoon, W. L., 1983. Conservation farming research program at Maha Illuppallama. In: Conservation farming in the Commonwealth (Commonw. Secretariat, London), 65-77.

Weerakoon, W. L., and T. C. L. G. Gunasekera, 1985. In situ application of Leucaena leucocephala (Lam) de Wit. as a source of green manure in rice. Sri Lankan J. Agric. Sci. 22, 20-27.

Wetselaar, R., Simpson, J. R. and T. Rosswall (eds), 1981. Nitrogen cycling in south-east Asian ecosystems. Canberra: Austral. Acad. Sci, 216 pp..

Whittaker, R. H. and G. M. Woodwell, 1971. Measurement of net primary production in forests. In: Productivity of forest ecosystems, UNESCO, Paris), 159-175.

Wiersum, K. F., 1986. Ecological aspects of agroforestry, with special emphasis on tree-soil interactions. Lecture notes. FONC Project Commun. 1986-16. Yogyakarta: Fakultas Kehuanan Univ. Gadjah Mada, 73 pp..

Wijewardene, R. and P. Waidyanatha, 1984. Conservation farming. Peredeniya: Dept Agric. Sri Lanka.

Wilson, G. F., Kang, B. T. and K. Mulongoy, 1986. Alley cropping: trees as sources of green-manure and mulch in the tropics. Biol. Agric. and Hortic. 3, 251-267.

Yamoah, C. F., Agboola, A. A. and K. Mulongoy, 1986a. Decomposition, nitrogen release and weed control by prunings of selected alley cropping shrubs. Agrofor. Sys. 4, 239-246.

Yamoah, C. F., Agboola, A. A. and G. F. Wilson, 1986b. Nutrient contribution and maize performance in alley cropping systems. Agrofor. Sys. 4, 247-254.

Yoon, Chin Saik and G. Toomey, 1986. Paulownia: China's wonder tree. IDRC Res. Rep. 15(2), 11-12.

Young, A., 1976. Tropical soils and soil survey. Cambridge: Univ. Press, 468 pp..

Young, A., 1983/5. An environmental data base for agroforestry. ICRAF Working Paper 5 (1983), revised 1985, 69 pp..

Young, A., 1984. Land evaluation for agroforestry: the tasks ahead. ICRAF Working Paper 24, 54 pp..

Young, A., 1986a. The potential of agroforestry for soil conservation. Part I. Erosion control. ICRAF Working Paper 42, 68 pp..

Young, A., 1986b. Evaluation of agroforestry potential in sloping areas. In: Land evaluation for land-use planning and conservation in sloping areas (ed. W. Siderius, ILRI Publ. 40, Wageningen), 106-132. Reprinted as ICRAF Reprint 33.

Young, A., 1986c. The potential of agroforestry as a practical means of sustaining soil fertility. In Prinsley and Swift (1986), q.v., 121-144. Reprinted as ICRAF Reprint 38 (1987).

Young, A., 1986d. Effects of trees on soils. In Prinsley and Swift (1986), q.v., 10-19. Reprinted as ICRAF Reprint 31.

Young, A., 1987. The potential of agroforestry for soil conservation and sustainable land use. In: Seminar on land and water resources management. Collected papers (ed. J. Kozub, Econ. Dev. Inst. of World Bank, Wash. DC), 301-317.

Young, A., in press, a. The environmental basis of agroforestry. Proceedings of the ICRAF/WMO workshop on the application of meteorolgy to agroforestry systems planning and management, Nairobi, 1987.

Young, A., in press, b. Agroforestry and soil conservation. Potential and needs for research. Proceedings of the Joint FAO/IAEA advisory group meeting, use of nuclear techniques in studying the roles of trees in restoring and maintaining soil fertility, Vienna, 1986.

Young, A., in press, c. The potential of agroforestry for soil conservation. Proceedings of the 5th International Soil Conservation Conference, Bangkok, 1988.

Young, A. and A. C. S. Wright, 1980. Rest period requirements of tropical and subtropical soils under annual crops. In: Report of the second FAO/UNFPA expert consultaiton on land resources for the future, FAO, Rome), 197-268.

Young, A., Cheatle, R. J. and P. Muraya, 1987. The potential of agroforestry for soil conservation. Part III. Soil changes under agroforestry (SCUAF): a predictive model. ICRAF Working Paper 44, 90 pp..

Zhu, Zhao Hua, 1986. Research on intercropping with Paulownia. Paper presented to the 18th IUFRO conference, Ljubljana.