PN-ABF-218
64554

ICRAF
Working
Paper
No

34

THE POTENTIAL OF AGROFORESTRY AS A PRACTICAL MEANS OF SUSTAINING SOIL FERTILITY

Anthony Young

August 1985

LIST OF TABLES

		Page
Table 1	Management practices which influence soil biology and fertility.	5
Table 2	Agroforestry practices.	8
Table 3	Estimates of typical values of parameters in the carbon cycle under natural vegetation.	12
Table 4	Estimates of the carbon cycle under cereal crops of low yield (1000 kg/ha) and moderate yield (3000 kg/ha).	16
Table 5	Rest period requirements of tropical soils.	23

LIST OF FIGURES

Figure 1	The carbon cycle under natural vegetation.	13
Figure 2	The carbon cycle under a moderate-yielding cereal crop in the lowland rainforest zone.	17
Figure 3	Changes in soil carbon, g/m^2, under forest, a cereal crop and agroforestry, at two levels of soil humus carbon.	18

CONTENTS

	Page
Abstract	1
1. Introduction and objectives	2
2. Biological processes and soil fertility	3
3. Practical management options	4
3.1 General	4
3.2 The range of agroforestry practices	7
4. The basis of plant/soil interactions under agroforestry	9
5. The plant/soil organic matter cycle	11
5.1 Under natural vegetation and agriculture	11
5.2 Under agroforestry	14
6. Specific aspects of soil organic matter	19
6.1 Fractions of organic matter	19
6.2 The role of roots	21
7. Related topics	22
7.1 Interactions in time and space: the significance of soil rest period requirements	22
7.2 The use of tree litter for purposes other than fertilization	24
7.3 Erosion control	24
8. Requirements for research	25
Acknowledgements	27
References	27

THE POTENTIAL OF AGROFORESTRY AS A PRACTICAL MEANS OF SUSTAINING SOIL FERTILITY

ABSTRACT

The maintenance of fertility through soil biological processes requires management practices which control the quantity, quality and timing of decomposition of plant residues. Agroforestry is one of the major practical managment methods which have the potential to bring this about. It is widely applicable, through many different kinds of practice, has substantial effects on the soil, and is relatively free from supply constraints. Trees restore soil fertility through their potential to increase the supply of organic materials and nutrients, to reduce nutrient losses, and to control the quality and timing of inputs. A first approximation to a plant/soil organic matter cycle under agroforestry is presented, showing that if the assumptions on which it is based can be verified, agroforestry has the potential for the design of land use systems that combine production of annual crops with maintenance of soil fertility. The significance of work on different fractions of organic matter, and on root residues, is discussed; these studies suggest benefits from mixtures of woody and herbaceous litter. Results of work on soil rest period (fallow) requirements are summarized; it has yet to be shown whether spatially-based agroforestry systems can be more efficient, in terms of land requirements, than crop/fallow rotations. Current research in agroforestry suffers from over-emphasis on a pragmatic approach at the expense of an understanding of basic processes. Research is needed on the decomposition of woody and herbaceous residues, singly and in combination, and their effects on soil properties.

1. INTRODUCTION AND OBJECTIVES

The Tropical Soil Biological and Fertility Programme (TSBF) is a collaborative programme of research, the objective of which is "to determine the management options for improving tropical soil fertility through soil biological processes" (Swift, 1984). This objective can be achieved through two stages:

i. to develop a predictive understanding of the functioning of biological processes in tropical soils, and their role in contributing to fertility;

ii. to apply such an understanding to the development of practical management measures to sustain and improve fertility.

The present account originated from two papers presented to meetings of the TSBF (see Acknowledgements). This coincided with an ICRAF review of the role of agroforestry in soil conservation, taken in its broader sense to mean conservation of fertility as well as prevention of erosion. An account of soil productivity and management under agroforestry systems has been given by Nair (1984).

The objectives of the present paper are:

i. To outline some of the hypotheses of the TSBF that are of particular significance to agroforestry.

ii. To show the potential of agroforestry as one of the major practical management alternatives for maintenance of tropical soil fertility through biological processes.

iii. Based on present knowledge of plant/soil organic matter processes, to give a preliminary outline of a possible organic matter cycle under agroforestry.

iv. To discuss the significance for agroforestry of recent advances in knowledge of soil organic matter processes.

v. To outline needs for research.

It should be emphasized that this is an interim statement of work in progress, and still at a relatively early stage. Much of it consists of hypotheses not yet fully supported by experimental evidence; these hypotheses, however, have substantial and favourable consequences if they can be verified.

Lastly, it should be emphasized that as a working paper, this is intended as a means to invite criticism and comment on the ideas presented.

2. BIOLOGICAL PROCESSES AND SOIL FERTILITY

Fertility is the capacity to support plant growth, and as such arises jointly from climate and soil. However, it is frequently desirable to isolate the element of soil fertility, which can be taken as the capacity of the soil to support plant growth, given satisfactory climatic and other environmental conditions.

The main soil conditions contributing to fertility are favourable physical properties, an adequate supply of nutrients, and absence of toxicities. None of these conditions are biological. The indifference of plant growth to soil organic matter as such is shown by the high crop yields that can be obtained, with fertilizer, on sandy soils with well under one percent organic matter, and by the not especially high fertility of peats.

It is widely recognized, however, that soil organic matter greatly influences fertility, through its effects on both physical conditions and nutrient supply (see, e.g., Young, 1976, p. 300; Swift and Sanchez, 1984, p. 7). Formerly, the emphasis was simply on maintaining the quantity of organic matter. This remains the priority, since if soil humus can be kept above some critical level, which varies with environment, then most other favourable consequences will follow. Recent work, brought into focus by the TSBF, has drawn attention to two other aspects: the quality of organic matter and the timing of its decomposition.

'Quality' is a loosely-defined term which refers to various aspects of physical and chemical composition. The term may be applied both to plant residues (litter and roots) and to soil humus. In the case of plant residues, it refers primarily to the relative proportions of sugars, nutrient elements, lignin and other polyphenols (Swift et al., 1978). This aspect is discussed further below (Section 6.1).

The timing of mineralization of soil organic matter controls the release of nutrients; and since nutrients are also subject to leaching, fixation and other losses, it is advantageous if this release can be effected at the same time as the major requirements for uptake by plant roots. The main control over timing of release is the period when plant residues are applied to the soil; other controls are the quality of such residues, how they are applied (e.g. to the surface or buried), physical and chemical soil properties, especially moisture, and the soil fauna.

There are two basic hypotheses underlying the TSBF, concerning synchrony in nutrient release and uptake, and soil organic matter, the SYNCH and SOM hypotheses respectively.

The SYNCH hypothesis is that the release of nutrients from plants, and their subsequent transformations via litter, humus

and mineralization, can be be synchronized with plant growth requirements, by means of management measures.

The SOM hypothesis is that the amount and types of soil organic matter, and thus its effects on soil properties and fertility, can be regulated by the types of litter and root residues.

Thus, seeking to improve soil fertility through biological means, the factors that it is possible to manipulate are:

i. the quantity of plant residues;
ii. the types of residues, and thus their quality;
iii. the timing and manner of their addition;
iv. the soil conditions that affect their decomposition.

3. PRACTICAL MANAGEMENT OPTIONS

3.1 General

These soil changes have to be brought about through practical management options, measures that the farmer with limited capital and technical resources can carry out on a field scale (as distinct from horticultural). In the first report of the TSBF programme there is a list of 21 soil biological processes or effects, with management practices by which they can be manipulated. Table 1 is a transformation of that list, in which the management practices are given in the first column, followed by their soil biological effects. Thus, fertilization (inclusive of liming and sulphur addition) can affect root turnover, rate of organic matter decomposition, solubilization of rock phosphate and denitrification.

Two columns have been added, "non-biological reasons" and "supply constraints". The former refers to practices that are usually carried out with objectives in mind that are not primarily control of soil biology. Thus, fertilizers are added to increase the nutrient supply directly, crop rotation to achieve balance in the nutrient demands, intercropping for a variety of reasons, ecological and economic. This applies also to management of burning, drainage, application of pesticides, and grazing control. All these practices have soil biological effects, but these are not the main reason why they are carried out. Thus, pesticides are applied to kill insects; the fact that they may also reduce the detritivore population is a side effect.

This situation often applies to agroforestry practices. The most common reason for them is probably to obtain firewood from the farm. Others are to produce fodder for livestock, fruit (for food or cash sale), or for soil conservation. In other cases, agroforestry is practised with the perceived objective of soil fertility improvement. Examples are the practice of laying *Erythrina poeppigiana* prunings on the soil in coffee cultivation, found widely in Central and South America, and the use of *Leucaena leucocephala* as a managed rotation in parts of the Philippines.

Table 1 Management practices which influence soil biology and fertility. Derived from Swift (1984, Table 1).

Management practice	Soil biological effects, see below	Non-biological reasons	Supply constraints
Fertilization, liming	1, 10, 12, 14	√	√
Crop rotation, intercropping	2, 21	√	
Legume fallow (herbaceous)	3		√
Mulching, compost, manure	7, 8, 19		√
Crop residue management	7, 8, 15, 17		(√)
Tillage management	6, 20		(√)
Agroforestry practices	2, 3, 4, 7, 15, 19	(√)	
Control of burning	11	√	
Drainage	13	√	
Pesticide management	5, 9, 20	√	
Grazing control	18	√	
Mycorrhizal inoculation	16		

√ Normally or frequently (√) Sometimes

Soil biological effects:

1. Increase root production
2. Cause variation in root exudates
3. Cause N fixation
4. Cause upward movement of nutrients
5. Reduce detritivore populations
6. Increase biological oxidation
7. Low quality residues promote synthesis of organic colloids
8. Low quality residues lead to nutrient immobilization
9. Insecticides increase microbial immobilization
10. Liming increases rate of soil organic matter decomposition
11. Burning increases mobilization
12. Addition of S increases solubilization of rock P
13. Drainage increases nitrification
14. Nitrate fertilization increases denitrification
15. Nutrient-rich residues increase reduction of S, F, Mn
16. Mycrorrhizal inoculation increases nutrient uptake
17. Crop residues increase soil particle aggregation
18. Heavy grazing increases soil surface capping
19. Organic residues maintain macrofauna and thus soil pores
20. Termites reverse clay illuviation; tillage or pesticides destroy termites
21. Crop rotation reduces toxification of soil

The fourth column in Table 1, supply constraints, indicates where the application of a management practice is often prevented or restricted by problems of supply. This is obviously so in the case of fertilizers. For grass mulching, composting or application of farmyard manure, there is frequently not the quantity of material available for application to the main area of field crops. From the 1950s onwards it was shown that 5-10 t/ha per year of manure is very beneficial to the soil; but in most farming systems, the supply is not likely to exceed 1-2 t/ha per year, and this alone does not maintain soil organic matter levels. In herbaceous legume fallows the constraint is one of land; green manuring, solely for the purpose of ploughing in the residues, is not viable. With regard to incorporation of crop residues, nothing so well combines practicability, even at a low level of technology, with clear beneficial effects on the soil; but the poorer farmers frequently have more pressing uses for crop residues, as livestock feed (especially in the Indian subcontinent) or construction materials for compounds (e.g. northern Nigeria). The possible supply constraint to tillage management is in the supply of herbicides where required for minimum tillage.

Summarizing this position, the practical management measures that are listed can be put into the following groups:

i. Practices carried out primarily for reasons other than their effects on soil biology: fertilization, crop rotation and intercropping, management of burning, drainage, pesticides and grazing.

ii. Practices in which soil biological effects are a substantial and perceived purpose, but which for poorer farmers are often subject to supply constraints: green manuring, mulching, composting and manuring, incorporation of crop residues, and tillage management.

iii. Direct biological manipulation; the case listed in the table is mycorrhizal inoculation but there are others, e.g. fumigation to destroy nematodes.

iv. Agroforestry, which: (a) can either be practised for economic reasons, with side-effects on soil biology and fertility, or with such effects as a perceived benefit; and (b) is often practicable for the poorer farmer, or can be made so by a modest level of governmental assistance (e.g. tree nurseries).

In summary, there are three management practices which are practicable, applicable in a wide variety of circumstances, and which have substancial effects on soil biological properties:

- crop residue management;
- tillage management;
- agroforestry.

The first two of these are linked in techniques of minimum tillage. There are also possibilities of combining (herbaceous) crop residue management and/or tillage management with agroforestry.

3.2. The range of agroforestry practices

Agroforestry is a collective name for land use systems in which trees are deliberately grown on the same land managment unit as agricultural crops or pastures, and in which there is both an economic and an ecological interaction between the tree and non-tree components. The economic interactions refer to ways in which production from trees can help to balance the supply of the farmer's basic needs: for food, fodder for livestock, firewood, shelter of various kinds, a cash income (regular) and investment needs (the occasional larger cash sum).

Ecological interactions refer to effects such as shading of crops by trees, protection of crops by live fences, effects of trees on soil moisture (both positive, through shading, and negative, through competition), and provision of shade for livestock. They also cover transfers of biological materials, such as incorporation of leaf litter into soil, or feeding of browse to cattle.

A misconception still sometimes found is that agroforestry refers to one or a small number of specific practices; in particular, it is still perceived in some quarters as consisting of either the taungya system or alley cropping.

There is, however, a wide range of agroforestry systems and practices. Some are traditional, for example the 'home gardens' of mixed trees and crops found in many humid tropical countries, or the retention and encouragement of *Acacia albida* in croplands or pasture. Others are associated with a cash economy, e.g. coffee-*Erythrina* systems widespread in Latin America. Examples are described in other ICRAF publications, particularly in the Agroforestry System Descriptions series. A classification of agroforestry systems, with examples, is given by Nair (1985).

An agroforestry practice is an arrangement of components (trees, crops, pastures) in space and time. The main practices are listed in Table 2. There are a number of overlaps between the practices listed; for example, the grazing of cattle beneath coconuts is both a "plantation crop combination" and "livestock under trees". Allowing for such overlaps, however, there are something like 20 distinct agroforestry practices. All of these have effects, greater or lesser, upon the soil.

Table 2 Agroforestry practices. Adapted from the ICRAF agroforestry systems inventory.

Improved shifting cultivation

Planted tree fallow

Taungya

Alley cropping

Boundary planting

Live fences

- mainly barrier function
- multipurpose

Multipurpose trees on:

- cropland
- rangeland or improved pastures

Woodlots (with multipurpose management)

Protein banks

Trees as shelter for:

- crops (windbreaks, shelterbelts)
- animals
- homesteads

Trees for soil conservation:

- on bunds, terraces
- strips
- hedges

Trees in water management

Home gardens

Plantation crop combinations:

- with lower-storey tree/shrub crops
- with herbaceous crops
- with upper storey trees (shade or multipurpose)
- with pastures and livestock

Livestock under trees

Dune fixation

Aquaforestry (including mangrove)

Apiculture with forestry

4. THE BASIS OF PLANT/SOIL INTERACTIONS UNDER AGROFORESTRY

The foundation for assuming that agroforestry systems can lead to a steady state of the soil lies in the observation that tree fallows build up soil fertility, as demonstrated by systems of shifting cultivation. This counteracts the decline in fertility under continuous cultivation of annual crops.

There are three agroforestry practices based on a time rotation of trees with crops: improved forms of shifting cultivation, planted tree fallows, and taungya. Improved shifting cultivation started with the corridor system developed at Yangambi in the former Belgian Congo; there are versions, including a livestock component, more recently devised for the Amazon (Bishop, 1982). In planted tree fallows, a fast-growing, nitrogen-fixing tree is planted in blocks, rotated around the agricultural land; the larger woody parts may be harvested for firewood, the remainder is returned to the soil. In taungya systems, the major objective is the harvest of the tree, annual crops being interplanted for 1 - 3 years; this is successfully practised in forest villages of Thailand and in the shamba system of Kenya, less effectively in some other instances.

More flexibility in design comes from substituting spatial arrangements of trees and herbaceous plants for rotations in time. The trees may be spaced more or less randomly, as in home gardens and some types of sylvopastoralism; regularly, in grazing beneath coconuts, rubber or timber trees; in single rows, as in boundary planting and some forms of alley cropping; or in strips several trees wide, also possible in alley cropping designs. In practices dependent upon spatial arrangements, a large range of interactions come into existence at the tree/crop interface. Important as these are, they will not be considered in the present discussion (cf. Huxley, 1983).

Essentially, therefore, an agroforestry system is made up of trees and herbaceous plants, each occupying a certain proportion of space and/or time. One way of looking at this situation is as a continuum between 100% crops and 100% trees, the former degrading the soil, the latter restoring fertility, but with the crops normally giving the higher economic return. Agroforestry systems lie somewhere between these extremes, and seek to find a mixture of components that will combine sustainability with an acceptable economic return. Such three-dimensional models are outlined by Huxley (1984, 1985). Soil-related aspects of a range of different agroforestry practices have been outlined by Nair (1984).

The basis for the role of agroforestry in sustainable land use systems is the same, whether there is a rotation of components in time or an arrangement in space: namely, that a net loss of soil fertility under the cropping component is balanced by a net gain under the tree component. Trees achieve favourable effects on the soil through three groups of processes: those which augment

additions to the soil, those which reduce losses from it, and those which influence the quality of plant additions, their timing, and rate of decomposition. These processes are as follows:

Processes which augment additions to the soil:

1. Fixation of carbon from the atmosphere, with synthesis of organic compounds and transfer via litter and roots to the soil.

2. Nitrogen fixation, symbiotic and non-symbiotic, again with subsequent transfer to the soil.

3. Bringing up nutrients released by rock weathering from deeper layers in the soil, and their release by litter decay on the surface.

4. Providing favourable conditions for atmospheric input of nutrients, from rainfall and dust.

Processes which reduce losses from the soil, making the plant/soil system more closed:

5. Protecting the soil from erosion, thereby preventing this cause of nutrient loss.

6. Trapping, with deeper roots, and recycling nutrients which might otherwise have been lost by leaching.

Processes which affect the quality of plant residues and the timing of their transfer to the soil:

7. Promotion of a range of different qualities of plant litter, through supplying a mixture of woody and herbaceous matter.

8. Possibly also the provision of a similar variation in the quality of root exudates and residues.

9. Controlling the timing of litter addition, by decisions on when to prune.

10 Effects of shading on microclimate, and thereby on soil climate and the rate of decomposition and mineralization.

The remainder of this discussion is concentrated on the cycling and effects of organic matter. Section 5 covers the organic matter cycle as based on earlier assumptions, and Section 6 is a discussion of the implications for some recent advances in knowledge. Cycles of nutrients under agroforestry will be treated in a later publication. For previous discussions of organic matter and nutrient cycling under agroforestry, see Ahn (1979) and Brunig and Sander (1983).

5. THE PLANT/SOIL ORGANIC MATTER CYCLE

5.1 Conceptual basis and the cycle under vegetation and cropping

The starting point for discussion of organic matter cycling is the model of the carbon balance under shifting cultivation constructed by Nye and Greenland (1960). There are two components to this model: the stores and flows of organic carbon under natural fallows (forest or savanna), and the basic assumption of a decomposition constant in the oxidation loss of soil organic carbon.

Although there has been much subsequent quantitative work on organic matter cycling under natural vegetation, the orders of magnitude for stores and flows of carbon established by Nye and Greenland have proved to be correct. Table 3 gives representative values for these stores and flows for three climatic environments: lowland rainforest, moist savannas (annual rainfall 900 - 1200 mm) and dry savannas (annual rainfall 600 - 900 mm). The savanna data are subdivided according to whether it is burnt (with assumed loss of above-ground vegetation) or unburnt.

The losses of carbon from the soil humus, through bacterial oxidation, are based on concept of a decomposition constant. That is, the amount of carbon lost in unit time through oxidation is assumed to be proportional to the amount of carbon initially present. This proportion is the decomposition constant, usually expressed as a percentage. The rationale for this assumption is that the oxidizing activity is proportional to the soil fauna present, the population of which is dependent on the substrate which supports it. In this paper, the decomposition constant under forest, k_f, is taken as 3% (0.03) and the decomposition constant under cultivation, k_c, as 4%. The assumption of a decomposition constant provides a homeostatic mechanism whereby soil organic matter will tend towards an equilibrium value under constant inputs, however large or small these may be.

This model takes no account of the existence of varying qualities of soil organic matter, with differing rates of breakdown, the implications of which are discussed in Section 6.1.

Figure 1 gives the models for the rainforest and moist savanna conditions, showing the position under equilibrium conditions. Gains to soil humus equal losses, at 190 g/m² per year in the forest environment and 120 g/m² per year under savanna. The soil humus contents of 6330 and 5700 g/m² carbon respectively are equivalent, making a number of assumptions, to topsoil organic matter levels of 4.2% under forest and 3.8% under savanna.

As a basis for discussing carbon flows under agriculture, one of these environments only is selected, that of rainforest. A cereal crop is assumed (typically maize), with two levels of grain yield: 1000 kg/ha, typical of low-input or 'traditional' agriculture in developing countries; and 3000 kg/ha,

TABLE 3 *Estimates of typical values of parameters in the carbon cycle under natural vegetation. Based on data in Nye and Greenland (1960), with some modifications. All values refer to organic carbon, which is assumed by Nye and Greenland to constitute approximately half of organic matter*

A. Stores of carbon (Values in g/m²)

		Lowland rainforest	Moist savannas	Dry savannas
Living vegetation:	trees	11000	2500	2400
	grasses	0	800	400
	roots	1200	400	200
Dead vegetation:	leaf litter	100	60	30
	wood	3600	200	200
Total living vegetation		12200	3700	2800
Total dead vegetation		3700	260	230
Soil humus		6330	5700	1700
Total in plant-soil system		22230	9660	4730

B. flows of carbon (Values in g/m²/yr)

	Lowland rainforest	Moist savannas		Dry savannas	
		Unburnt	Burnt	Unburnt	Burnt
Net intake from atmosphere	850	600		170	
Loss in burning	0	0	450	0	120
Root growth	280	150		50	
Litter and timber fall	570	450	0	120	0
Humification of litter	90	70	0	20	0
Oxidation loss in above	480	380	0	100	0
Root exudation	280	150		50	
Humification of roots	100	50		20	
Oxidation loss in above	180	100		30	
Total additions to soil humus	190	120	50	40	20

Source: Young (1976), p. 110.

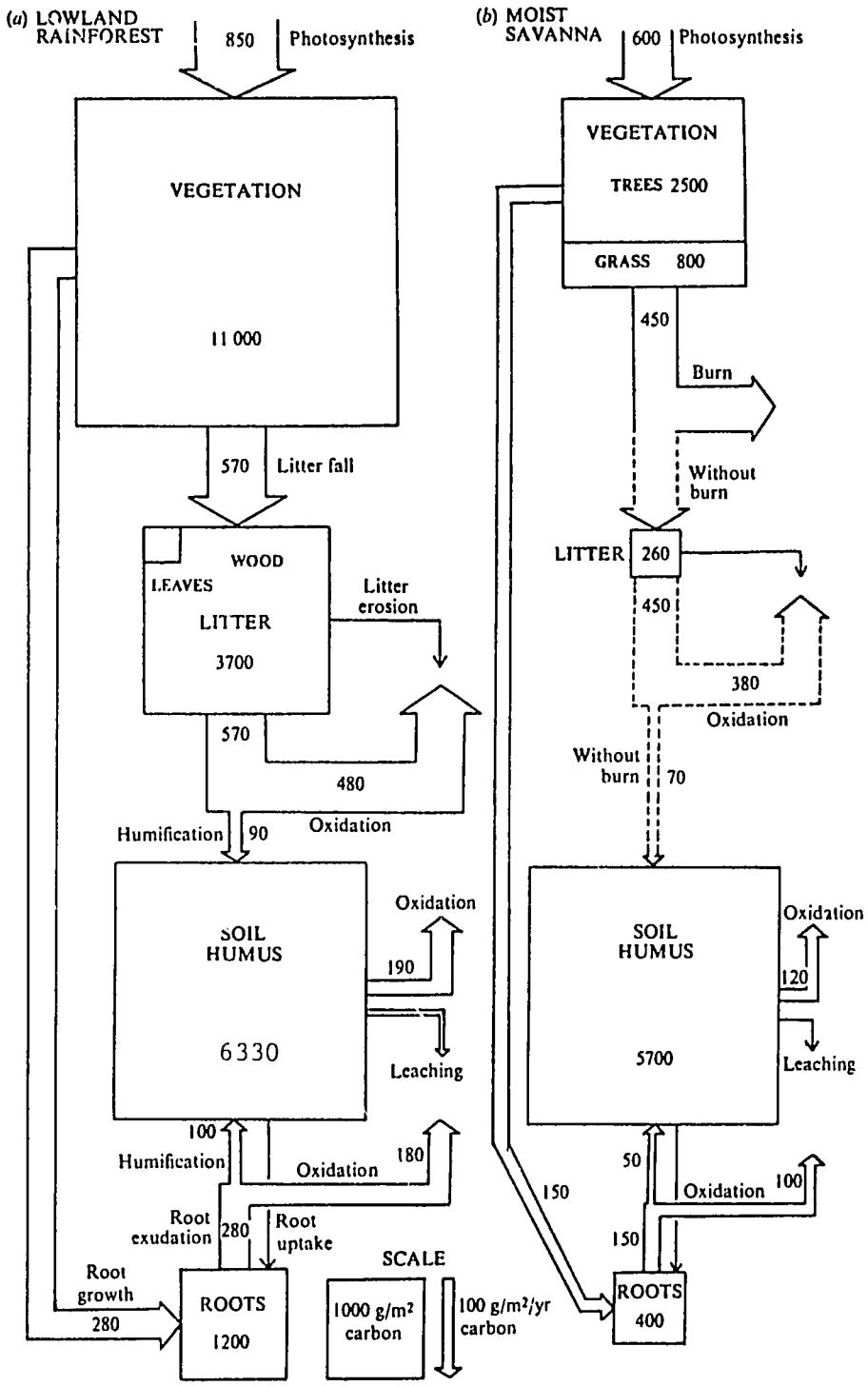

Fig. 1 The carbon cycle under natural vegetation. Cf. Table 3. Source: Young (1976, p.111), based mainly on data in Nye and Greenland (1960).

representative of intermediate inputs, i.e. improved farming, with some use of fertilizers, but lower than in high-capital, high-technology agriculture. For each yield level, two alternatives considered are that the crop residues are or are not returned to the soil.

Table 4 gives stores and flows of carbon for four conditions: low and moderate yields, each with removal or retention of residues. It is assumed that cultivation has already lowered soil humus to half its level under forest, 3500 g/m² carbon. The harvest index (grain as percent of above-ground biomass) is taken as 33%, and biomass of roots as 33% of the above-ground biomass. The same assumptions are made as in Table 3, namely that the split between humification and oxidation loss is 15% : 85% for crop residues (litter in Table 3), and 33% : 67% for roots.

There is net loss of carbon from soil humus under all four sets of assumptions. Its level is lowered annually by about 1% of its initial level under the most favourable conditions and 3% under the least favourable. If such cropping were continued (avoiding erosion), the soil humus would reach equilibrium at levels shown in part C of the table. On grounds of soil structure maintenance, erosion resistance, and retaining a nutrient source and retention medium, these levels are certainly unacceptably low for the first three cases, and even in the most favourable case represent only one third of the level under natural forest.

The situation for moderate yields with residues removed is shown diagrammatically in Figure 2. As compared with the model under forest (Figure 1) the feature is the high proportion of total carbon in the plant-soil system that is contained in the soil store. Losses are shown by shaded boxes, the dotted area for 5 years of cereal cultivation with removal of residues.

5.2 The soil organic matter balance under agroforestry

If assumptions made in the preceding section are justifiable, it is possible to construct a first approximation of the cycling of organic matter (represented by carbon) under a schematic agroforestry system. It should be re-stated that this simplified model takes no account of the existence of fractions of organic matter with differing rates of decomposition.

The model is based on the following assumptions:

- A humid tropical (rain forest) environment.
- The planting of trees which have a rate of growth, and thus litter production, equal to that of a natural forest fallow.
- An agroforestry practice in which trees and crops each occupy 50% of land, in space or time.
- The assumptions, from Table 4, of a 'moderate' crop yield (3000 kg/ha grain) with crop residues removed.

- The assumptions on processes set out in Section 5.1.

The effects are virtually the same for a rotation of trees and crops as for a spatial mixture of equal proportions, except for a toothed pattern to the curve of soil carbon with time in the former case compared with a smooth curve in the latter.

The assumptions are perhaps unduly favourable (for soil organic matter) in that only one cereal crop per year is taken, whereas two crops are common in humid tropics; but errs on the cautious side in assuming that the trees planted in the agroforestry system have only the same rate of growth as natural vegetation.

In Figure 3, the upper diagram shows what happens when the forest is first cleared. Under forest conditions, inputs and outputs of soil carbon are equal, at 190 g/m^2 per year. Under the crop they are very unequal, leading to a rapid fall in soil humus level. The half-and-half agroforestry system still leads to a combined loss of 100 g/m^2 carbon per year.

The lower diagram shows the situation when soil carbon has reached 3450 g/m^2. Inputs from tree and crop components are unchanged, but the assumption of the decomposition constant leads to approximate halving of the oxidation losses. Under the crop alone there is still a net annual loss of 86 g/m^2 carbon, but this is balanced by an equal net gain under the tree component. The agroforestry system as a whole --- soil, soil organisms, tree, crop and environment --- is stable. This equilibrium is reached with soil organic matter at slightly over half its natural level, a proportion generally taken to be acceptable in agriculture.

This result is exciting in the prospects which it opens up. It amounts to an hypothesis that, provided the assumptions can be verified, agroforestry systems can be designed that are productive in terms of crops, and at the same time lead to a steady state of soil organic matter. The features that require verification are that the processes operate in the manner stated, and that the general magnitudes of plant growth assumed are correct.

This result is currently being followed up, through the construction of models of the cycling both of organic matter and nutrients, the former taking into account the different organic matter fractions. There is a substantial body of source data, both studies of cycles as a whole and individual components (e.g. litter fall, nitrogen fixation). This exists for:

- natural vegetation; there is an imbalance towards studies of forest, but with some data on savanna and semi-arid ecosystems;

- agricultural systems;

Table 4 Estimates of the carbon cycle under cereal crops of low yield (1000 kg/ha) and moderate yield (3000 hg/ha). Values in g/m^2 carbon.

Crop residues:	Low yield		Moderate yield	
	Removed	Retained	Removed	Retained
A. Stores				
Crop: grain	50	50	150	150
vegetative	100	100	300	300
roots	50	50	150	150
Soil humus (OM = 2.33%)	3500	3500	3500	3500
Plant soil system	3700	3700	4100	4100
B. Flows				
From atmosphere	200	200	600	600
Root growth	50	50	150	150
Harvest	50	50	150	150
Crop residues, removed	100	0	300	0
" " retained	0	100	0	300
Humification of residues	0	15	0	45
Oxidation loss in above	0	85	0	255
Root exudation	50	50	150	150
Humification of roots	17	17	52	52
Oxidation loss in above	33	33	98	98
Total additions to soil humus	17	32	52	97
Loss from soil humus (k_c=4%)	140	140	140	140
Net change in soil humus	-123	-108	-88	-43
C. Equilibrium level of soil humus				
Carbon, $g\ m^{-2}$	425	800	1300	2425
Equivalent topsoil OM%	0.28	0.53	0.87	1.62

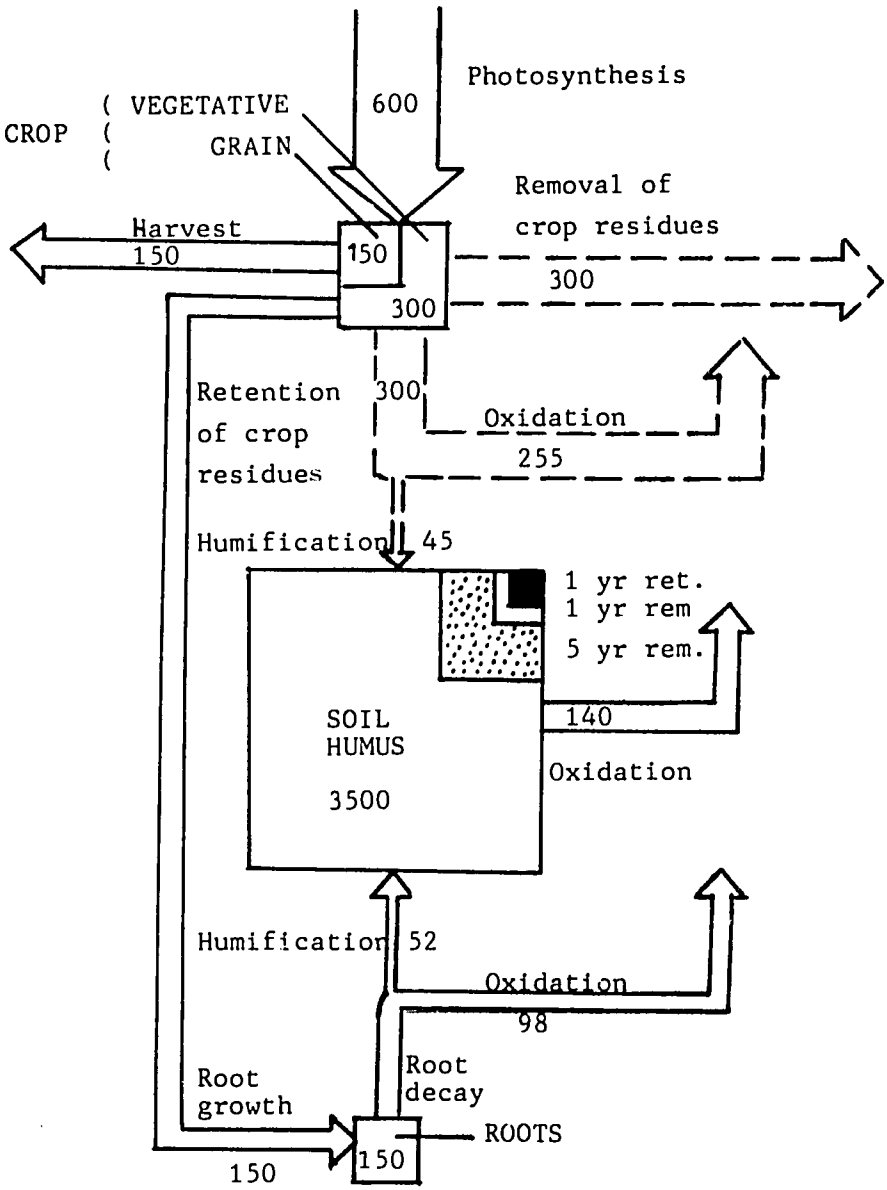

Fig.2 The carbon cycle under a moderate-yielding cereal crop in the lowland rainforest zone. Shaded areas show net losses of soil humus as follows: 1 yr ret. = loss in 1 year, crop residues retained; 1 yr rem. = loss in 1 year, crop residues removed; 5 yr rem. = loss in 5 years, crop residues removed.

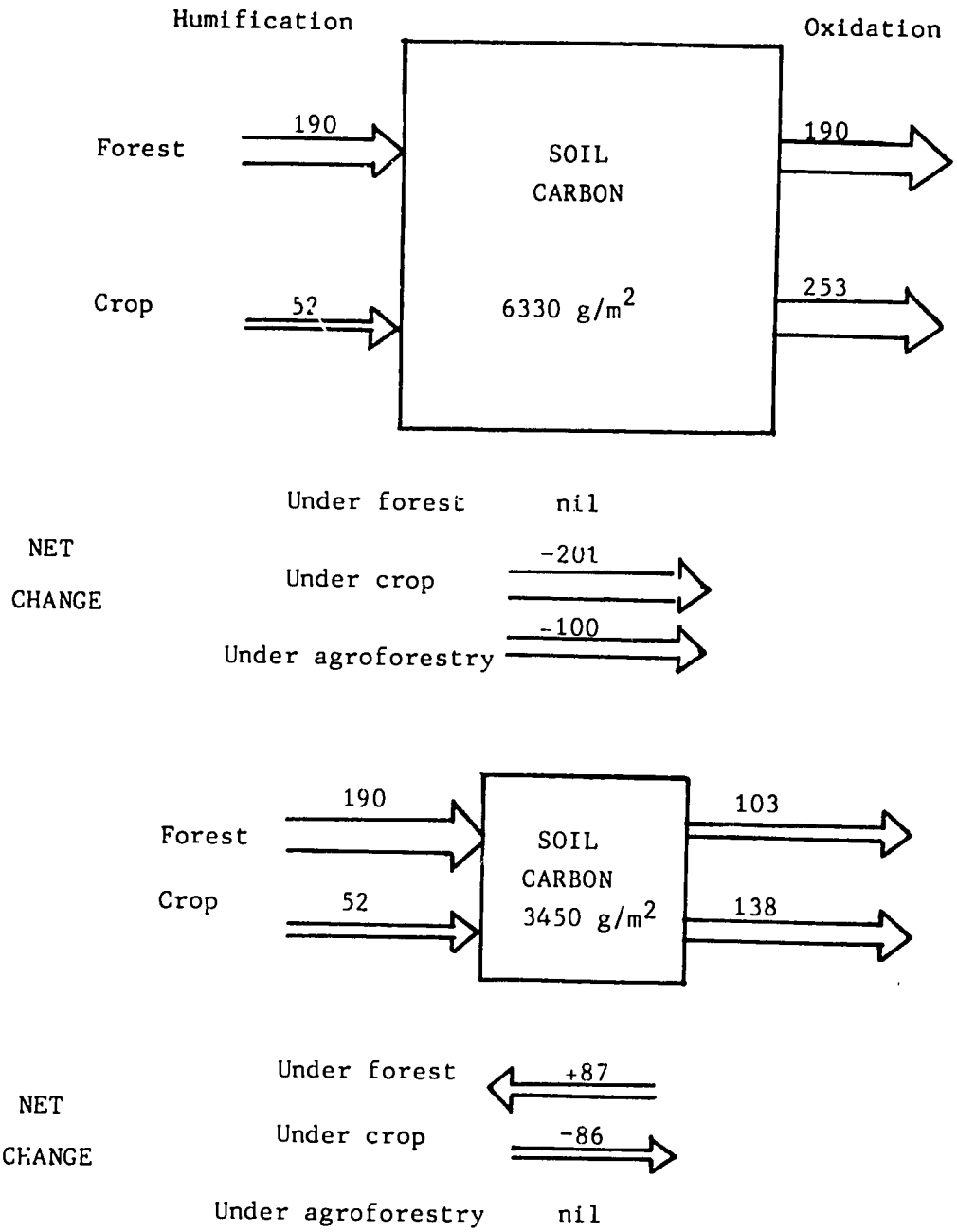

Fig. 3 Changes in soil carbon, g/m^2, under forest, a cereal crop and agroforestry, at two levels of soil humus carbon. Assumptions are: (i) cereal crop, moderate yield, residues removed; (ii) decomposition constants, for forest, $k_f = 3\%$, for cultivation, $k_c = 4\%$.

- forest plantations; these studies arise form the concern of foresters about the long-term effects on soils of fast-growing forest plantations;

- agroforestry systems; there are a substantial number of records of individual components, particularly tree growth rates and litter production, and a few studies of total cycles.

Computerized models are being developed, of greater complexity but with a similar basis to those of Figures 1-3.

6. SPECIFIC ASPECTS OF SOIL ORGANIC MATTER

Two advances in knowledge about soil organic matter are of much potential significance to agroforestry. These are the distinction between fractions with differing rates of loss, and the role of root exudation and decay.

6.1 Fractions of organic matter

The former assumption (employed in the above model) was of a single decomposition constant for soil organic matter, a fixed proportion of the current store that was lost by bacterial oxidation each year. Reasoning from observed equilibrium levels led to the supposition of constants of some 3% under natural vegetation, rising to 4% under agriculture. It was soon suspected that the losses during the initial decomposition of plant residues, for the first 6 months to a year, were very much faster (Young, 1979, pp. 114-5). The position has been transformed by carbon isotope studies, which enable the progress of labelled plant material to be followed through the system (Jenkinson, 1971, 1977; Jenkinson and Ayanaba, 1977; Sauerbeck and Gonzalez, 1977; Paul and van Veen, 1978; Gonzalez and Sauerbeck, 1982).

The addition of carbon-14 labelled residues to a soil enables the loss of this specific material to be followed over time. Studies both in temperate and tropical soils have a decay curve of the same form: a very rapid loss over the first 3-6 months, changing fairly abruptly into a slower rate of exponential decay. For studies in the U.K. and Nigeria, using the same plant material, the two curves could be superimposed almost exactly if the time scale for Nigeria was divided by four. This led to the assumption that these correspond to two different fractions of organic matter.

The fast-decay fraction is lost rapidly, such that in tropical soils, some 65% of the labelled plant material is lost within the first 6 months or less. It seems likely that this corresponds to the loss in 'conversion' from litter to humus in the Nye-Greenland model, which takes values of 75-90% loss for above-ground litter and 50-80% for roots.

The next organic matter fraction is lost in an exponential decay manner, with a half-life of between 3 and 6 years. These are the only two fractions directly monitored by carbon-14 labelling.

The equation underlying the Nye-Greenland model is of the form:

$$C_1 = C_0 - kC_0$$

or

$$C_1 = C_0 (1-k)$$

where C_0 = initial carbon, C_1 = carbon after 1 year, and k is the decomposition constant expressed as a fraction.

This simplified equation takes no account of the effect of decrease in the course of the year on the quantity of carbon remaining. For short periods of time, the relation is more precisely expressed by an equation of exponential form:

$$C_t = C_0 . e^{-rt}$$

where C_t = carbon after time t (years), e is the exponential constant, and r is a parameter. For slow rates of decay (k and $r<0.1$) the equations are nearly equivalent and $r \approx k$. For a single organic matter fraction the half-life $T_{1/2}$ is given by:

$$T_{1/2} = \ln(2)/r$$

With two fractions, the equation becomes:

$$C_t = C_1 . e^{-r_1 t} + C_2 . e^{-r_2 t}$$

where C_1 and C_2 are the fast and slow-decay fractions respectively, and r_1 and r_2 the corresponding vaues of r. In Gonzalez and Sauerbeck's (1982) results for Costa Rica soils, C_1 ranged from 52-72% of total carbon and C_2 correspondingly from 28-48%. Values of r_1 were mainly in the range 3.4-7.4, those of r_2 in the range 0.12-0.23. Jenkinson and Ayanaba's (1977) values for Nigeria are similar.

Three lines of evidence suggest the existence of a third organic matter fraction, with a considerably slower rate of decay. First, it is possible to calculate the equilibrium value of soil carbon, based on the existence only of the first two fractions. The theoretical equilibrium calculated in this way is found to be about 1.5-3.0 times the annual addition of plant material. Observed soil carbon percentages, however, are very much higher, such as to imply a totally unrealistic value of annual plant carbon additions if these were composed only of the first two fractions. This leads to the presumption of a third fraction, with substantially slower decay.

The second piece of evidence comes from the decay of non-labelled carbon in the same experiments as those described above, that is, carbon already present in the soil at the start of the experiment. This is lost very much more slowly than the labelled

carbon; typical values appear to be some 3% per year, a similar value to the formerly - assumed decomposition constant. This unlabelled soil carbon may be taken to comprise a mixture of relatively recently-added plant carbon and older material, and thus the loss rate of the latter is likely to be less than that of the total carbon.

Thirdly, there has for long been the apparent anomaly that carbon dating of soil organic matter has sometimes yielded values of hundreds of years. This could refer to the third, very stable fraction.

Thus there appear to be three organic matter fractions:

- a fast-decay fraction with a half-life in tropical soils of less than 6 months; this may alternatively be treated in modelling as loss during humification;

- an intermediate-decay or labile fraction with a half-life in tropical soils of about 3-6 years;

- a slow-decay or stable fraction, capable of remaining in the soil for periods in excess of 50 years.

The first two fractions are clearly likely to be the main contributors to nutrient release. It has been speculated that the third fraction contributes particularly to maintenance of favourable physical conditions in the soil, but there is no evidence for or against this.

Does the stable fraction originate mainly from decay of lignin, and is thus favoured by woody litter? If so, there is an obvious significance for agroforestry. There is also a management implication, namely that twigs and fine branches should be left to rot with leaf litter, and not removed for convenience of agricultural operations.

Whatever the detailed mechanisms, it is plausible to suppose that litter of differing quality affects soil biology in varying ways, one of the basic hypotheses of the TSBF (Section 2). If this is so, then there is clearly a potential value in the capacity of agroforestry to yield a mixture of herbaceous and woody residues.

6.2 The role of roots

The second advance in knowledge, also found by C labelling, is that root exudation and root death during the growth of a plant, taken together, can substantially exceed the mass of roots found by digging up the plant and weighing what remains (Sauerbeck and Johnen, 1977; Bowen, 1984). That is, more labelled carbon remains in the soil over a period that can be accounted for by the roots present at the end of that period. This may help to explain why the soil organic matter situation under agriculture is not even worse that it might be!

We do not know if tree roots are more active or less than those of herbaceous plants in this respect. There is a potential significance, likely enough to be worthy of investigation, in the fact that trees produce a mixture of different types of roots, which could be beneficial in a similar way to that of a mixture of different types of above-ground litter.

7. RELATED TOPICS

7.1 Interactions in time and space: the relevance of soil rest period requirements

The situation in which a period of annual crops is alternated with a fallow or other means of restoring fertility has been reviewed in terms of soil rest periods (Ahn, 1979; Young and Wright, 1980). A rest period is defined as a natural fallow, grass ley or managed woody fallow. The rest period requirement is the proportion of rest time needed to maintain the soil in a steady and productive state, when used for cultivation of annual crops. The requirement is expressed in terms of the cultivation factor, R, the number of years under cropping expressed as a percentage of the total cropping/non-cropping cycle.

A review of available information on rest period requirements was conducted as part of the FAO study of crop production potential of agro-ecological zones. Data were obtained both from published information and a questionnaire. Rest period requirements were obtained according to climate, soil type and level of agricultural inputs (Young and Wright, 1980). Low inputs refer to traditional farming methods without use of fertilizers, intermediate inputs to improved farming but with moderate techinical and capital resources, high inputs to advanced technology. A summary of the results is given as Table 5.

This review was conducted in terms of rotations in time. It is important for agroforestry to know whether the results would remain the same if translated into spatial terms. For example, for ferralsols in the rain forest zone under low inputs, the R value is given as 15%, a requirement of 6.67 years of fallow to every one of annual crops. Translated into spatial terms, this implies that to maintain soil fertility, the tree strips would have to cover 85% of the land, leaving only 15% for crops. This is acceptable under a taungya system, but certainly not for alley cropping. For luvisols in the savanna zone at intermediate input levels, the rest period requirement is 50%, equivalent in the alley cropping system to equal widths of crop and tree rows.

These results deserve careful notice, particularly in the planning of alley cropping. If it appears, whether by reference to local experience or from Table 5, that the rest period needed to maintain fertility in a cultivation-fallow rotation is X percent of time, then the initial assumption must be that to achieve the same result in spatially-based system, X percent of the land must be occupied by trees. If it could be shown that a given percentage of tree cover grown at the same time as crops

Table 5 Rest period requirements of tropical soils. All values refer to the cultivation factor, R, expressed as a percentage. Source: Young and Wright (1980).

	LOW INPUTS			INTERMEDIATE INPUTS			HIGH INPUTS		
Soil type (FAO) / Growing period (days)	Rain forest Zone 270-365	Savanna Zone 120-269	Semi-arid Zone 75-119	Rain forest Zone 270-365	Savanna Zone 120-269	Semi-arid Zone 75-119	Rain forest Zone 270-365	Savanna Zone 120-269	Semi-arid Zone 75-119
R, Q Regosols and Arenosols	10	15	20	30	35	45	50	65	50
F Ferralsols Fa acric	15 5	15	20	35 10	35	40	70 60	70	75
A Acrisols	15	15	20	40	35	60	65	65	75
L Luvisols	25	30	35	50	50	55	70	75	75
B Cambisols	35	50	40	65	60	60	85	85	80
N Nitosols Nd dystric Ne eutric	25 40	30 55	40 75	55	80	70	90	90	90
V Vertisols	40	55	45	70	75	75	90	90	90
J, G Fluvisols and Gleysols	60	70	90	80	80	90	90	90	90

had a more beneficial effect on fertility than an equal percentage of time in fallow, then this would be of great significance and potential benefit. Unless and until such evidence is forthcoming, however, the null hypothesis must be that the tree cover required to maintain fertility is proportional to the fallow period found to be necessary.

7.2 The use of tree litter for purposes other than fertilization

Throughout the discussion, it has been assumed that all parts of the tree are returned as litter to the soil. In agroforestry systems this frequently will not be the case. The larger branches and, on felling, the stem will commonly be harvested as fuelwood, the leaf litter and reproductive parts (e.g. legume pods) may be fed to livestock. Many agroforestry systems are designed and practised precisely with the objective of helping with these supply problems. If fuelwood or fodder are in short supply, and labour sufficient, most farmers will choose to harvest these tree products. The above-ground woody and/or herbaceous residues are not then available to maintain soil fertility.

In the case of fuelwood, there could be a partial return of nutrients if ash is returned to the soil, but a permament loss of carbon. In the case of cut-and-carry fodder, the cycle is closed if the kraal dung is returned to the fields. Since livestock are a source of farm income it may well prove to be more beneficial, combining economic with ecological aspects, to pass litter through the digestive systems of livestock than to apply it directly to the soil. Many farmers will do so anyway, without the need for analysis of benefits by linear programming!

7.3 Erosion control

Although data from the tropics are still sparse, there is clear evidence of a link between soil erosion and fertility decline (Stocking, 1984). Material lost by sheet erosion contains a disproportionately high content of nutrients, compared with the topsoil as a whole. There is also loss of soil organic matter, the highest content being at the surface, as well as the washing away of litter prior to its decomposition. The quantitative relations between erosion rates and fertility loss are poorly known but need to be taken into consideration in models of nutrient cycling and maintenance of fertility.

The main agroforestry techniques for soil conservation are as follows:

- planting trees on the risers of terraces (for both stabilization and production);

- planting trees on contour bunds or strips (mainly to make productive use of this land, but also to ensure that these remain in fixed positions);

- using closely-spaced hedges as conservation barriers.

The third of these in particular can be combined with fertility improvement, since the hedges are kept low by repeated pruning. Prunings from the other two techniques can also be thrown onto the soil between rows of trees, thus combining fertility maintenance with physical soil conservation, and the necessity of pruning the trees to prevent excessive shading.

8. REQUIREMENTS FOR RESEARCH

It has not yet been demonstrated that the desirable situation shown in Figure 3, the combination of crop production with maintenance of soil fertility in a steady state, can be brought about; nor is there proof of the other possible beneficial effects of trees upon the soil that have been discussed. The purpose of this paper is to put forward hypotheses which have highly attractive consequences if they can be verified. These hypotheses need to be tested by research.

There is now a substantial amount of ongoing research in agroforestry, and a growing body of completed results. Comments on this research are first, the existence of a bias towards alley cropping, and secondly, too much emphasis on a pragmatic approach at the expense of a basic understanding of processes.

The bias towards alley cropping is explicable in the light of scientists' preference for controlled conditions and the opportunity to change variables (e.g. spacing) in a regular manner. There has been relatively little work on boundary planting --- and whoever heard of research on the highly productive, practicable and extremely sustainable system of home gardens? This bias is understandable and perhaps excusable, except that alley cropping must not be regarded as a panacea.

More serious is the emphasis on pragmatic research, on the approach of 'try it and see if it works'. The reason for this is the desire quickly to produce a technology that can be put into practice. This in turn stems first, from the worthy idea that research is for the benefit of farmers, and secondly, from pressure by aid agencies to go ahead with development as soon as possible.

The outcome is that too much current research leads to uncoordinated ad hoc results, rather than to a basic understanding of the processes involved. This is illustrated by alley cropping experiments, on species and spacing designs, in which the results are evaluated solely in terms of crop yields, without monitoring changes in soil. This black box approach --- and the soil ecosystem is inside the box --- leads to results that cannot be extrapolated or manipulated. They show that certain combinations of species, spacing and plant management will work well in a particular environment; but through omitting to demonstrate why these function well, and why other combinations do not, this fails to supply the means for

scientific design of other combinations for different circumstances.

This comment applies to many aspects of agroforestry research, including soil biology and fertility. The basic understanding that is needed in this field is the mechanisms by which trees improve the soil. The field design of such experimental work should be based on experimental plots with:

- trees only;
- crops only;
- mixtures of trees with crops.

Plant growth, litter production and decompostion, and soil changes are monitored under each of these. Only the mixtures are in themselves agroforestry; but frequently, advances in knowledge needed for agroforestry design are obtained from research based on monocultures.

For the monitoring observations under such a design, the 'minimum package' devised by the TSBF programme forms an excellent basis. Because of high micro-variablity of soil properties, a statistical design based on composite sampling is necessary. The significance of results can be calculated in advance on the basis of coefficients of variation of individual soil properties from single samples of some 30 - 70%. The soil monitor ng programme at the ICRAF Machakos Field Station employs such a sampling design, although as it is a station for demonstration and training, it is currently monitoring mixtures only, without monoculture controls (Young, 1984).

Another way of expressing the position is to say that an understanding of how agroforestry techniques can best be applied to raise soil fertility will come from two sets of research: first, the broad range of soil biological research, leading to an understanding of basic processes; and secondly, studies of the specific effects of mixtures of woody and herbaceous litter, of different types of roots, and thus of trees and herbaceous plants.

At present, much pragmatic research is inefficient, partly because a high proportion of the species/spacing/management combinations tried are unsuccessful, but mostly because they do not lead to an understanding of the mechanisms involved. If a basic understanding of processes can be built up, then 'try-it-and-see' work, which is also necessary as a final, predevelopement, stage, can start from a much more advanced position, with a good prediction of what can be expected to succeed.

ACKNOWLEDGEMENTS

This working paper is based on two papers presented at meetings of the Tropical Soil Biology and Fertility programme: "The role of soil biological processes in agroforestry", given to the first TSBF conference in Lancaster, U.K., January 1984; and "The potential of agroforestry as a practical management option for sustaining tropical soil fertility", given at a planning meeting in London, July 1985. The present account benefits greatly from discussions at those meetings. I am also grateful to Dr. P. Hotten for discussion of organic matter fractions, and Dr. P.A. Huxley for comments on the significance of fallow periods and on experimental design.

REFERENCES

Ahn, P.M. 1979. The optimum length of planned fallows. In: Soils research in agroforestry. Proceedings of an expert consultation (ed. H. O. Mongi and P.A. Huxley, ICRAF, Nairobi), 15-39.

Bishop, J.P. 1982. Agroforestry systems for the humid tropics east of the Andes. In: Amazonia: agriculture and land use research (ed. S.B. Hecht, CIAT, Cali, Columbia), 403 - 416.

Brunig, E.F. and N. Sander. 1983. Ecosystem structure and functioning: some interactions of relevance to agroforestry. In: Plant research and agroforestry (ed. P.A. Huxley, ICRAF, Nairobi), 220-247.

Gonzalez A., M.A. and D. R. Sauerbeck 1982. Decomposition of ^{14}C-labelled plant residues in different soils and climates of Costa Rica. In: Regional colloquium on soil organic matter studies (ed. C.E. Cerri et al,CENA/PROMOCET, Sao Paulo), 141 - 146.

Huxley, P.A. 1983. The tree/crop interface. ICRAF Working Paper 13. Nairobi: ICRAF.

Huxley, P.A. 1984. The role of trees in agroforestry - some comments. ICRAF Reprint 10. Nairobi: ICRAF.

Huxley, P.A. 1985. The prediction of biological productivity and sustainability of tree/crop mixtures. Tropical Agriculture (in press).

Jenkinson, D.S. 1977. Studies on the decomposition of plant material in soil. V. The effects of plant cover and soil type on the loss of carbon from ^{14}C labelled ryegrass decomposing under field conditions. J. Soil Sci. 28, 424 - 434.

Jenkinson, D.S. and A. Ayanaba. 1977. Decomposition of carbon-14 labelled plant material under tropical conditions. J. Soil Sci. Am. 41, 912 - 915.

Nair, P.K.R. 1984. Soil productivity aspects of agroforestry. Nairobi: ICRAF. 85 pp.

Nair, P.K.R. 1985. Classification of agroforestry systems. ICRAF Working Paper 28. Nairobi: ICRAF.

Nye, P.H. and D. J. Greenland. 1960. The soil under shifting cultivation. Commonwealth Bureau of Soils Technical Communication 51. Hapenden.

Paul, E.A. and J.A. van Veen. 1978. The use of tracers to determine the dynamic nature of soil organic matter. Trans. 11th Int. Congr. Soil Sci. III, 61 - 102.

Sauerbeck, D.R. and B.G. Johnen. 1977. Root formation and decomposition during plant growth. In: Soil organic matter studies (IAEA, Vienna), 141-153.

Stocking, M. 1984. Erosion and soil productivity: a review. Rome. FAO 102 pp.. (AGLS)

Swift, M.J. (ed.). 1984. Soil biological processes and tropical soil fertility. Biology International, Special Issue 5.

Swift, M.J., O.W. Heal, and J.M. Anderson. 1978. Decomposition in terrestrial ecosystems. Oxford: Blackwell, 372 pp..

Swift, M.J. and P.A. Sanchez. 1984. Biological management of tropical soil fertility for sustained productivity. Nature and Resources 20(4), 2-10.

Young, A. 1976. Tropical soils and soil survey. Cambridge: Cambridge University Press, 468 pp..

Young, A. 1984. Soil monitoring at the ICRAF Machakos Field Station. Report 1. Nairobi: ICRAF.

Young, A. and A.C.S. Wright. 1980. Rest period requirements of tropical and subtropical soils under annual crops. In: Land resources for populations of the future. (FAO, Rome), 197-268.