PN-AE 64365

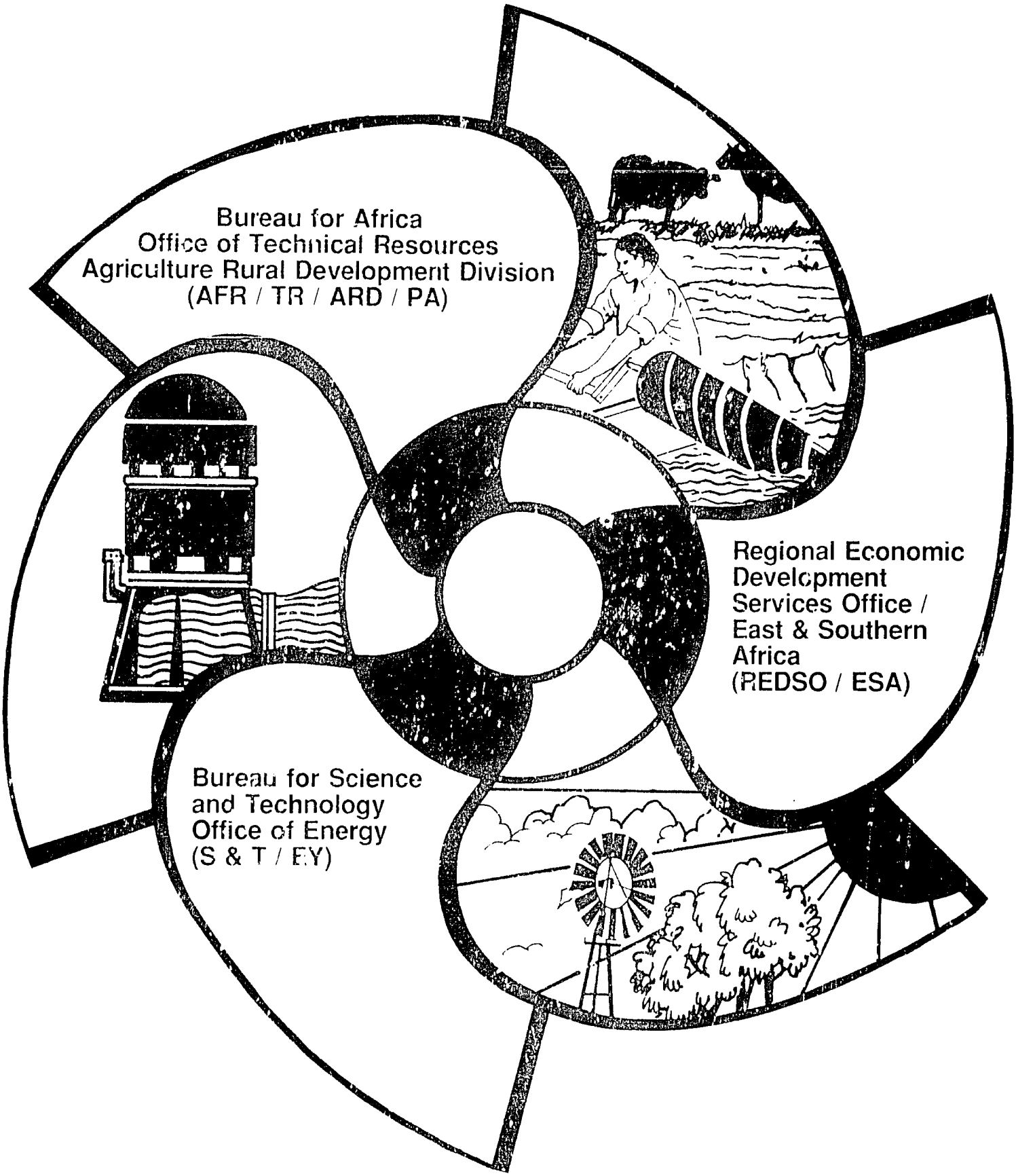


U.S. Agency for International Development
Washigton D.C. 20523
Conference on Water Pumping / Water Lifting in Africa
Volume II. Conference Discussion Papers

April 5-10, 1987

PN-ABE-102

# PROCEEDINGS
# CONFERENCE ON WATER-PUMPING/WATER-LIFTING IN AFRICA

## Volume I: Workshop Summary

Volume I includes the opening remarks by Minister Mogwe and U.S. Ambassador Bellochi. The conference agenda, participant list, executive summary are a part of this volume. In addition, the group discussions and the recommendations thereof are included here.

## Volume II: Discussion Papers

Volume II includes the papers that were prepared for or presented at the conference.

This document was prepared by Arun Banskota of International Science & Technology Institute (ISTI), under A.I.D. contract no. AFR-0510-C-00-5039-00. The views and interpretations expressed do not reflect the official position of the Agency for International Development. Please direct any comments or suggestions to Arun Banskota, AFR/TR/ARD, Rm.2941 NS, Agency for International Development, Washington, D.C. 20523.

## TABLE OF CONTENTS


1. Pumping And Water Lifting In Africa - An Overview Of Problems And Advantages — 1
   - Derrick Thom

2. A Cost Comparison Of Different Power Sources For Irrigation Pumping Systems In Two Agroclimatic Regions Of Africa — 6
   - Robert Perlack, Carl Petrich, Garland Samuels, Samuel Schweitzer

3. Improved Water Pumping/Water Lifting In Africa: Rapid Country Review of Botswana — 46
   - IT Power

4. Comparative Water Pump Program (CWPP) In Botswana: Tentative Conclusions and Lessons Learned — 64
   - Jonathan Hodgkin, Rick McGowan, Ron White

5. An Overview Of The Water Pumping/Supply In Zimbabwe — 76
   - B. Byabura-Kirya

6. Community Participation: The Key To Care-Cameroon's Northern Wells Project — 83
   - Mark Henderson

7. Handpump Maintenance In The Extreme North Province Of Cameroon — 87
   - Mark Henderson

8. Use of Renewable Energies for Pumping & Lifting Water in Sudan — 92
   - Dr. El Tayeb Idris Eisa

9. New Directions For AID's Renewable Energy Activities — 108
   - Renewable Energy Applications and Training Project, USAID

10. Some examples and references of the French Aid in Waterpumping/Waterlifting in Africa — 113
    - Dominique Peter

11. Overview Of FAO's Activities In Africa With Regard To Water Lifting — 121
    - M. Sonou

12. Problems And Potential Solutions Related To Improved Water Pumping/Water Lifting In Swaziland — 123
    - Jeremiah B. Magagula

13. Planning For Rural Water Supply And Sanitation In Swaziland: Approaches, Problems and Remedies 134
- I.M.V. Ngwenya

14. Human Powered Water Pumping For Irrigation 141
- Dan Jenkins

15. USAID Universal Treadle Pump For Human Powered Irrigation 149
- Dan Jenkins

16. Comparison Of Pumping Technologies For Village Water Supplies: A Case Study Of Diesel Motor Pumps And Photovoltaic Pumps Under High Head Conditions 169
- Mike Godfrey

17. Animal Drawn Pump: An Appropriate Technology 179
- Warren W. Jones

18. Small Power Pumps For Irrigation 195
- Dan Jenkins

19. Irrigation In Lesotho: Past, Present And The Future 199
- O. Letsela, K. Skhonyana, G. Johnson

20. Individual Small Scale Irrigation Schemes In Lesotho 211
- Homer Moore and Wayne Nishek

21. Water Roof Catchment 219
- Boinett, Oluoch and Muroki

22. Problems And Potential Solutions Related To Water Pumping/Lifting In Ghana 224
- Michael Tsiagbey

23. Report On Peace Corps Mali Water Lifting Technology In Service Training 231
- Lynn Uttal

24. Problems And Potential Solutions Related To Improved Water Pumping/Lifting In Kenya 237
- William K.K. Boinett

25. Problems and potential solutions related to improved water-pumping/water-lifting in Kenya 245
- Moses Sika

26. Perspectives from the Asia Region On Water Pumping/ Water Lifting Issues 256
- J.K. Campbell

# PUMPING AND WATER LIFTING IN AFRICA - AN OVERVIEW OF PROBLEMS AND ADVANTAGES

by Derrick Thom

## I. INTRODUCTION

A. The following remarks reflect the thinking of my colleague Jon Moris and I on the problems and prospects for pumping in Africa, especially as it relates to irrigation. 1

B. After reviewing the performance of pumping systems in Africa, we begin to realize that avoidance of unnecessary pumping should be one of the first rules of the neophyte engineer.

> Pumps when employed by unskilled operators without benefit of adequate mechanics and parts may not last through two seasons as experienced by the USAID-funded Action-Ble Dire in Mali.

## II. SEVEN ISSUES AFFECTING WATER-PUMPING/WATER LIFTING IN AFRICA

A. Problems and Constraints

In a previous meeting of this group in August 1985, I identified seven issues or constraints to pumping in Africa. Pumps appear to be very problematic when introduced into more remote settings where small schemes are often located. The sources of difficulty are the following:

1) The great vulnerability of "orphan" equipment which cannot be supported within the immediate commercial environment.

   a) Orphan equipment - i.e., meaning, units without a local suppliers' representative - is even harder to support when the farmer is penniless and there are no commercial suppliers.
   b) At the same time, we can expect that poorly equipped field mechanics will be especially clumsy when dealing with an unfamiliar make and model of pump.
   c) Indeed we would stress that, as a general rule, the introduction of a few units of some new model or equipment type is bound to fail over the longer run except under unusual circumstances, i.e., a fully commercialized economy like that of central Zimbabwe's or perhaps the Kenya Highlands.

---

1. These remarks are excerpted from African Irrigation Overviews - Main Report, by Jon R. Moris, et. al., WMSII Report #37 (forthcoming).

d) Orphaned units of American equipment introduced under USAID auspices can be found all across Africa-rusting in the yard or cannibalized for parts to keep other units running.

2) The fact that a pump breakdown may immediately threaten the associated production system.

a) Breakdowns tend to occur at the peak periods when a pump may be run at beyond its rated capacity in order to alleviate a high level of moisture stress in the field crops.
b) A failure then puts the whole crop in jeopardy, perhaps leading to a farmers' inability to repay pumping costs.

3) Poor maintenance which leads to a high rate of breakdowns and a rapid deterioration of equipment.

a) Poor maintenance is cited in most field reviews as a strongly contributing factor behind pump failures.
b) In some areas the attitude is prevalent that routine maintenance is a luxury to be undertaken at those times of the year when funds are in surplus and equipment utilization low.
c) We have all probably experienced the temptation to forego maintenance when funds are short or equipment is in heavy use - a temptation which becomes especially acute in poor African countries.
d) Maintenance also suffers when tools are missing or one cannot obtain the correct types of lubrication fluid - a common problem within Africa's underequipped workshop.
e) Before we criticize African field technicians, we should note the same tendency among donor-sponsored projects. When projects become short of either money or time, one of the first things to be compromised is the effort directed toward institutionalizing adequate maintenance procedures.
f) Perhaps the earliest area to suffer is in regard to training the farmers themselves. Nobody seems particularly good at this task; in project activities, bottom-level mechanical skills are usually conveyed by example and by apprenticeship, not by formal training.
g) Lacking effective instructional modules, most project managers are uncertain how to actually train farmers in pump operation and maintenance.
h) When projects fall behind schedule, the pressure becomes almost irresistable to begin distributing pumps irrespective of advance preparations - again Mali's Action Ble Dire.
i) Similarly, cost overruns can mean inventory of spare parts is never actually made operational and this in

turn forces mechanics to cannibalize new equipment.

j) All in all, maintenance is a difficult function to institutionalize and therefore tends to be sacrificed when projects run into logistic scheduling difficulties.

4. Frequent problems associated with obtaining fuel or power to keep pumps operating.

   a) Problems with fuel supply appear to be more severe in Africa than on any other continent.
   b) Most African pumps are powered by diesel engines except for the smallest ones.
   c) The problem arises in several contexts:

      1) Out in remote areas of Africa, imported fuel is simply not available for extended periods.
      2) Physical storage is difficult because there are often no storage tanks and instead fuel is kept in 44-gallon drums which often becomes contaminated while being transferred.
      3) Third problem - because of high prices for diesel fuel out in the bush, unofficial diversions are common place. Drums may be delivered a quarter empty or, even worse, topped up with water.

5. Farmers' inability to pay operating costs at the times needed.

   a) Irrigation by pumping does require continuous financial outflows from some source.
   b) By mid-season the less commercially-oriented farmers will have exhausted their cash reserves.
   c) Here the use of annual income and yield estimates within appraisal documents hides the fact that many farmers have insufficient weekly cash flow to sustain pumping through harvest time.
   d) Unless backed by an effective credit scheme they may be forced out of irrigated production at mid-season, even after having incurred substantial production costs.

6. Difficulties caused by fluctuating water levels, which may exceed a pump's lift capacity.

   a) A technical difficulty often encountered in Africa is the varying level of the supply from which the water is being pumped.
   b) Toward the end of the dry season supplies usually shrink dramatically with perhaps the river going almost dry or a lake shore receding beyond the pump intake.

c) In Sahel countries, principally along the Senegal River, the mounting of pumpsets on moveable skids has been tried.
d) While generally regarded as a success, skid and float mounted pumps have their own problems.
e) It is easy to get the coupling from engine to pump out of alignment, the mounting may shake apart from engine vibration, and list or unsteadiness of floats can adversely affect the lubricating system or load the shafts and bearings unevenly - as pointed out by Keller's study of Bakel. His review suggests that at many sites there really is no cheap technical alternative within the same cost range; efforts should be directed at improving the design of existing systems.

7) The generally poor quality of backup services (mechanics, parts, etc.).

The lack of infrastructure to provide rapid service when breakdown occurs is common to all African countries with perhaps the exception of Zimbabwe, where pump parts can be replaced within 12 hours, or the central highlands of Kenya.

## III. ADVANTAGES OF PUMPING IN AFRICA

### A. INTRODUCTION

1) Having spread gloom and doom for pumping systems in Africa, let me close these opening remarks on a more positive note by enumerating some of the advantages of pumping in Africa.
2) The ironic fact is that in theory pump-based water delivery has several advantages when contrasted with expensive canal delivery systems.

### B. SIX ADVANTAGES

1) Pumps come in many sizes:

They are ideally suited to small perimeters located along the major rivers such as the Niger and Senegal where lift required ranges from 5 to 15 meters.

2) Small pumps can be removed fo repairs or repositioned between seasons.

3) The costs of small pumps is within reach of the more commercially oriented farmer particularly if several farmers pool their investment.

Note Tarka Valley onion farmers in Niger.

4) There is no necessary leakage to a particular crop so that farmers can grow whatever is most profitable at the moment.

Compare to rice irrigation perimeters.

5) Pumps can be linked to various types of delivery systems - including overhead sprinklers, a mode not yet fully exploited in Africa.

For all of these reasons, but most especially the ease of matching pumps to small perimeters, almost all of USAID's first generation projects in the Sahel have relied upon pumping and will probably continue to do so in the future.

6) Finally, only modern pumping systems make possible tapping a deep groundwater for the establishment of cattle posts for livestock development, although one runs the risk of creating problems of overspraying when too many animals congregate around the boreholes during the drought years. Such was the experience of the Sahel during the drought years of the early 1970's.

## IV. CONCLUSION

Despite the interactive nature of the negative factors of pump irrigation, pumping will persist. However, pump-based systems need to be planned with caution, recognizing the disadvantages and planning accordingly to avoid the pitfalls of the past. This means that designers have to minimize the problems of "orphan" equipment, pump breakdown and the problems of poor maintenance by standardizing pumps and providing sufficient funding for training and extension. Sufficient fuel storage and supplies have to be guaranteed and credit provided to minimize the risk of the small farmer. Finally, sufficient back-up services in the form of trained mechanics, availability of spare parts and other supplies have to be available. Until these conditions are met, successful pump-based irrigation systems will be difficult to achieve in the African context.

DRAFT

# A COST COMPARISON OF DIFFERENT POWER SOURCES FOR IRRIGATION PUMPING SYSTEMS IN TWO AGROCLIMATIC REGIONS OF AFRICA *

Robert Perlack
Carl Petrich
Garland Samuels
Energy Division
Oak Ridge National Laboratory
Oak Ridge, Tennessee 37831

Samuel Schweitzer
Office of Energy
Bureau for Science and Technology
U.S. Agency for International Development
Washington, D.C. 20523

APRIL 1987

* A revised version of this paper will be available from AID's Office of Energy by August 1987

# A COST COMPARISON OF DIFFERENT POWER SOURCES FOR IRRIGATION PUMPING SYSTEMS IN TWO AGROCLIMATIC REGIONS OF AFRICA

## INTRODUCTION

The expansion of agricultural output in developing countries depends critically on the availability of reliable and cost-effective energy supplies for irrigation. Pumping is becoming increasingly important to the overall productivity of agricultural output and to expansion of irrigated land. However, it is now being realized that the availability and reliability of such energy supplies for irrigation can no longer be taken for granted. For instance, in the Sudan $100 million (US) in agricultural output was lost in 1984 when a shortage of energy supplies stopped irrigation and tillage activities. A shortage of diesel fuel for pumped irrigation reduced the yield of irrigated crops in some parts of Somalia by 40 to 60 percent during 1984. And, in a remote area of Madagascar over 1,100 hectares were taken out of rice production for a lack of energy and irrigation pumping capacity.

These examples illustrate the importance of energy supplies for irrigation activities. New approaches must be initiated that ensure that energy is not a constraint to realizing the full benefits of irrigation and to the expansion of agricultural productivity and output. Considerable agreement now exists that low irrigation performance and the existence of many uneconomic irrigation projects are partly the result of inadequate attention to the energy component of the pumping system. In most rural areas of developing countries that do not have access to grid electricity, dispersed diesel pumpsets are the most common prime mover for irrigation. In practice these dispersed diesel-powered pumps are plagued by many problems which contribute to the low realized benefits of irrigation development projects. Among these problems are high maintenance and operation requirements, the need for frequent overhauls, the inability to acquire spare parts, very low realized energy efficiencies, and difficulty in procuring fuel. Further, diesel pumpsets are complex for farmers to properly maintain and require constant attention during operation. These problems have all affected the operation of irrigation projects.

These recurrent problems with diesel pumpsets have prompted interest in electrified irrigation pumps. Electrified pumps offer many advantages over dispersed diesel pumpsets to the farmer including simplified and unattended operation, greater reliability, and longer maintenance intervals with correspondingly lower maintenance costs. In rural areas where there is no existing grid, pumps can be supplied electricity from a centrally located generator coupled to a simple "minigrid." The centralized generation plant and the minigrid can serve not only irrigation pumping needs using electric pumpsets, but offers excess capacity to serve the needs of small rural industries, health and educational facilities, and other village uses such as lighting and provision of potable water. Moreover, the central generator can be

operated and maintained by full-time, trained technicians ensuring greater reliability and longer plant life. If the centralized plant is diesel driven, fuel and spare parts may also be more easily obtained than under a dispersed diesel pumpset regime. If the central power facility uses renewable fuels, such as rice-hulls, the location provides a place whereby fuels can be concentrated.

The purpose of this paper is to provide an order-of-magnitude comparison of the cost of water pumping through the use of commonly used small diesel-driven pumpsets versus a small centralized generator connected to a simple minigrid.[1] Examples representing the Sahelian and South Central African agroclimatic regions are constructed for this comparison. In both of these examples that follow it is assumed that the centralized generator is diesel driven, although it is recognized that small-scale power systems based on renewable resources, coal, and natural gas are also competitive where the resource conditions are favorable. The following sections of this paper describe the two applications, discuss the results, and summarize the conclusions.

## APPLICATIONS

Two examples are considered to compare water pumping costs of dispersed diesel driven pumpsets versus a centralized generator coupled to a minigrid. The first example is representative of irrigated cropping systems found in the Senegal and Niger river basins. Irrigation in this region is typified by small perimeters of 20 ha to 40 ha. In the small perimeters the water for irrigation is obtained by pumping from an adjacent river. The second example is representative of irrigated cropping systems in South Central Africa ranging from southern Zaire to Botswana. In this region irrigation offers considerably more variety than that of the river valley systems in the Sahel. The irrigation perimeters are much smaller and groundwater is pumped from shallow wells. Because irrigation is not widely practiced in this region, this example must be considered somewhat hypothetical. In the remainder of this section the climatic setting, the cropping system, and the irrigation system and schedule are described for each example.

### Sahelian Irrigation System

The local climatic regime is that of the Matam area of the Senegal River Valley. In this region, there are two distinct seasons. The "wet season" generally begins in July and continues through September. Over 80% of the total annual rainfall occurs in this period. The dry season runs from October through June and accounts for only 16% of the rainfall (Brito, 1982 and Hargreaves et al., 1985). The Senegal River is the

---

[1]Irrigation pumps powered by renewable energy options based on wind and solar energy are assumed not to be competitive with the dispersed diesel pumpsets in this example.



8

primary source of water for irrigation.[2] River levels fluctuate significantly from wet to dry seasons with the total difference between maximum and minimum river levels of as much as 10 meters.[3] Maximum land surface elevations along the river are about 15 m above sea level and the river bed elevation is only about 4 to 5 m above sea level. River water is essentially a commodity with free access. Thus, the water costs are the costs of pumping.

In this example an irrigation area of 400 ha is selected with 16 irrigation perimeters or management parcels of 25 ha. The irrigation perimeters are used to develop crop water requirements and to size the irrigation system for the dispersed diesel pumpsets. Under the minigrid pumping option the dispersed diesel pumpsets are replaced by electric pumps.[4]

Irrigation perimeters are located adjacent to the Senegal river on the "fonde" (natural levee) and typically have soils which may be classed as silty clay loams to silty clays. Available soil water holding capacities range from 0.14 to 0.18 cm water/cm soil. Surface irrigation is practiced exclusively with actual application relying on some form of basin and furrow system. Water application efficiencies are low and may

---

[2]Groundwater is tapped by hand-dug wells for domestic water supply and garden irrigation, but is not utilized for larger scale irrigation due to the relatively low well yields and proximity to the river.

[3]Most pumpsets in the upper Senegal valley are unit sets. This means that the diesel engine and pump are either manufactured by the same company and matched at the factory, or, if the engine and pump are manufactured by separate companies they are matched by one of the companies and sold as a unit. Thus, the pump and engine are reasonably well matched for design operating conditions. Pumping heads may vary, however, considerably between dry season and wet season conditions due to substantial variations in the river level. Thus, maximum lift requirements (just due to elevation difference) may vary from 15 meters in the dry season to only 5 meters in the rainy season. All pumps are centrifugal pumps with typical pump operating characteristics. Because suction lift of such pumps is effectively limited to about 6.7 meters, the pump sets are either placed on anchored rafts or on trailers adjacent to the river at water level.

[4]In small village perimeters, pumps are operated by a "pompist" selected from the village and given minimal training in pump operation and routine maintenance (fueling, lubrication, oil changing, etc.). Minor maintenance is performed effectively, although availability of spare parts is a recurrent problem.

be expected to be in the range of 40% to 60%.[5] Typically, a dry and wet cropping season is followed. A variety of crops may be grown in these perimeters but rice is probably the most prevalent wet season cash crop and sorghum the most prevalent dry season irrigated subsistence crop.

Irrigation system requirements are based on peak crop water use rates. Crop water requirements are a function of crop type, potential evapotranspiration (ET), and crop stage of growth. In this analysis the modified Penman equation (Penman, 1948) is used to calculate reference crop (potential) evapotranspiration ($ET_o$) from local climatological data. Crop coefficient curves are then developed (Doorenbos and Pruitt, 1977) and used to estimate daily water requirements throughout the cropping season.[6] Figure 1 summarizes reference crop $ET_o$ for the entire year. Actual crop water use (mm/day) is estimated by:

$$ET = ET_o * K_c \tag{1}$$

where $K_c$ is a crop coefficient related to the crop stage of growth and $ET_o$ (mm/day) is the reference crop evapotranspiration.[7] Consumptive use curves for the example crops are shown in Figs. 2 and 3. For rice a growth period of 110 days is assumed for the rainy season. The growth period for sorghum is assumed to be 110 days in the dry season.

The capacity of the irrigation system is based on peak water use rates and may be determined from the relationship:

$$Q = K * AD/FH \tag{2}$$

where Q is the system capacity in $m^3/s$, A the area covered by the system ($m^2$), D the gross depth of irrigation application (m), F the number of days to complete one irrigation, H the hours of operation each day, and K is a constant ($2.78 \times 10^{-4}$) used to convert $m^3/hr$ to $m^3/s$.

The minimum irrigation interval, F, is determined by:

$$F = d/ET \tag{3}$$

where d is the net depth to apply per irrigation (m) and ET is the peak daily water use rate (m/day). Use of this value for T in Eq. 2 would imply daily operation of the pump which is generally impractical because

---

[5]Irrigation efficiency accounts for losses in getting water conveyed and applied the crops in the field. Efficiency varies with the method of irrigation and the type of soils.

[6]Actual water requirements will, however, depend on the irrigation system efficiency and frequency.

[7]In this analysis crop coefficients as a function of days after emergence have been developed which are then used to determine actual consumptive use curves using Eq. 1.



10

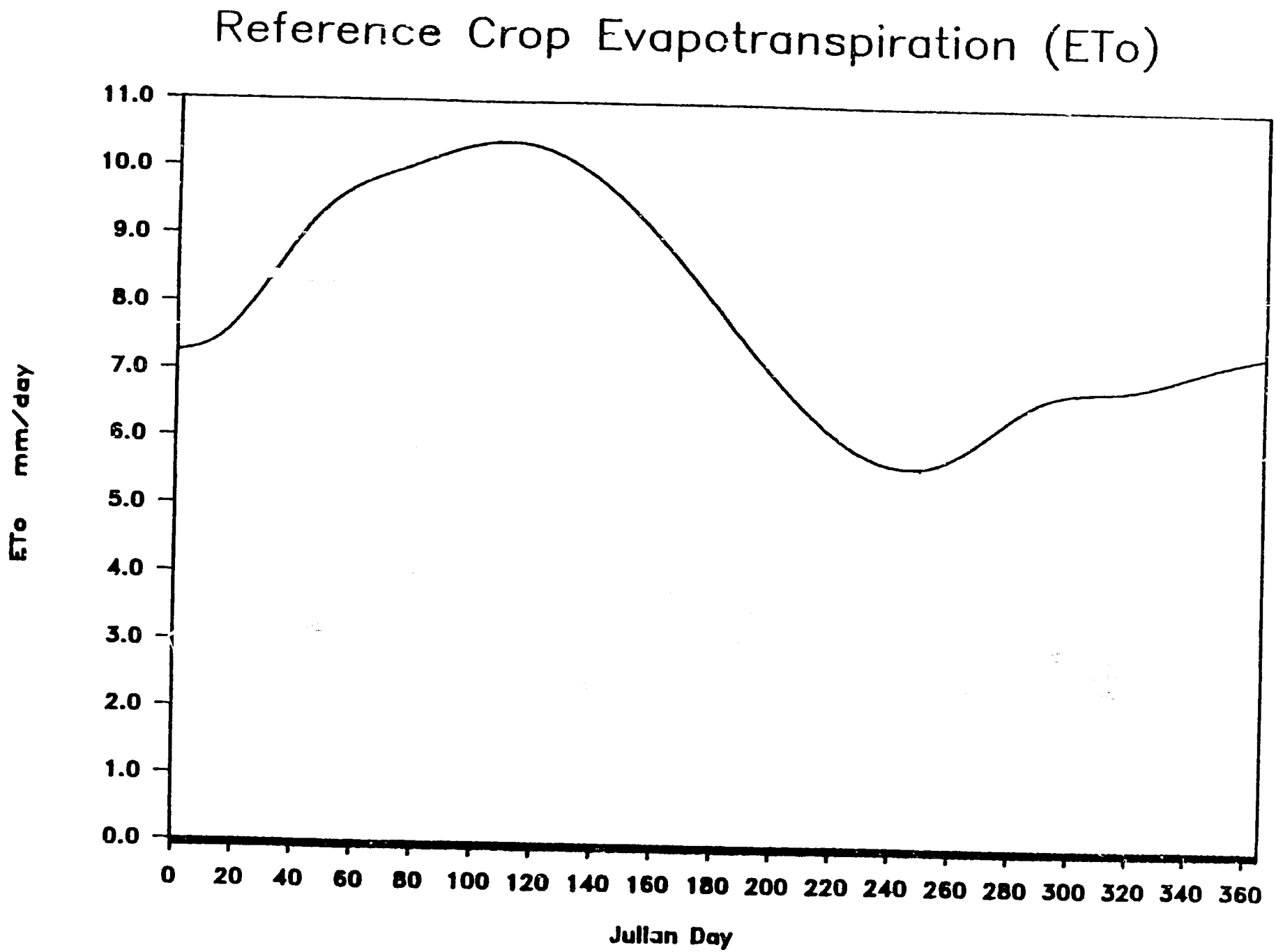


Fig. 1. Reference crop evapotranspiration - Senegal River Valley

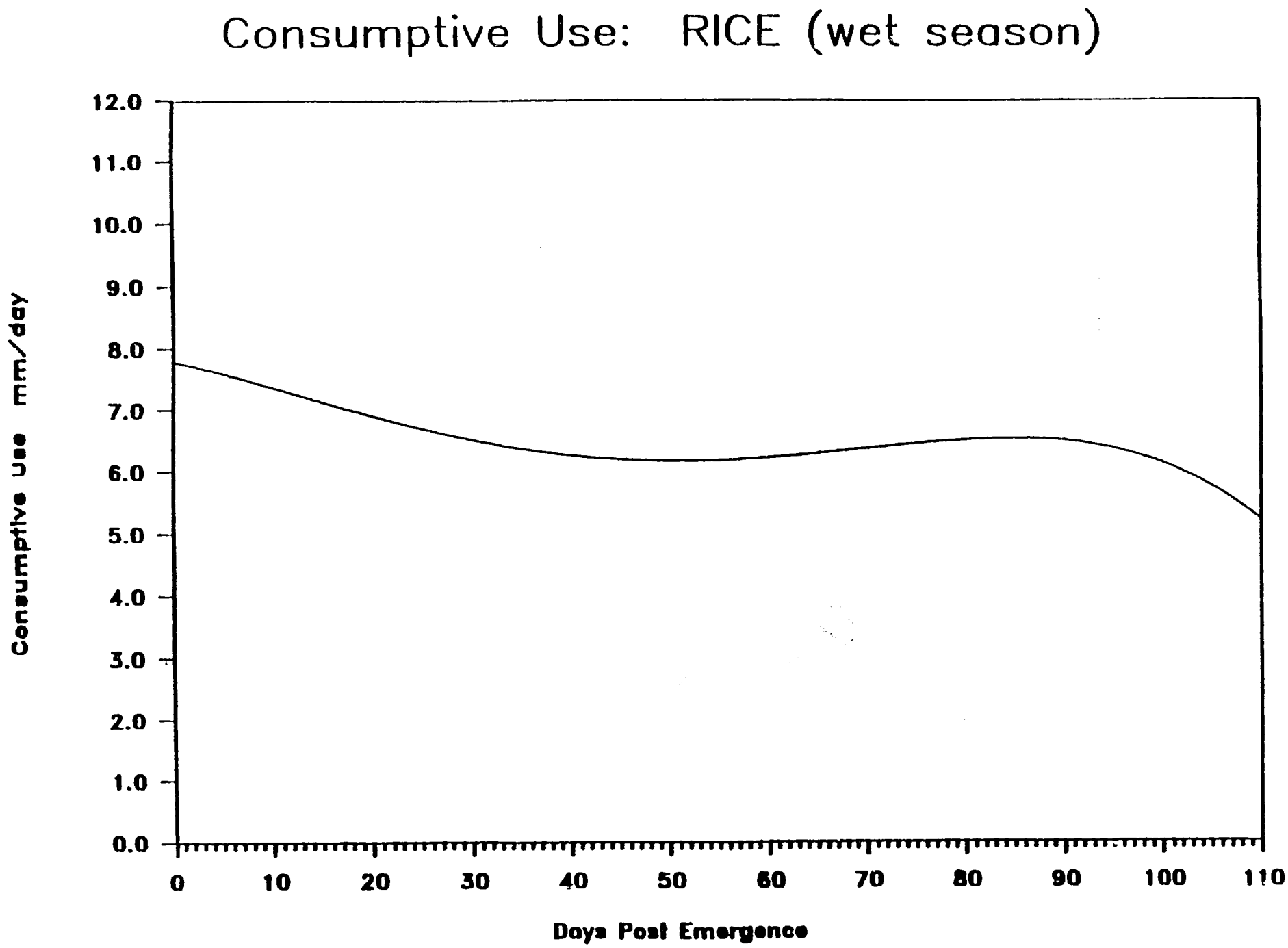


Fig. 2. Consumptive use for wet season rice - Senegal River Valey

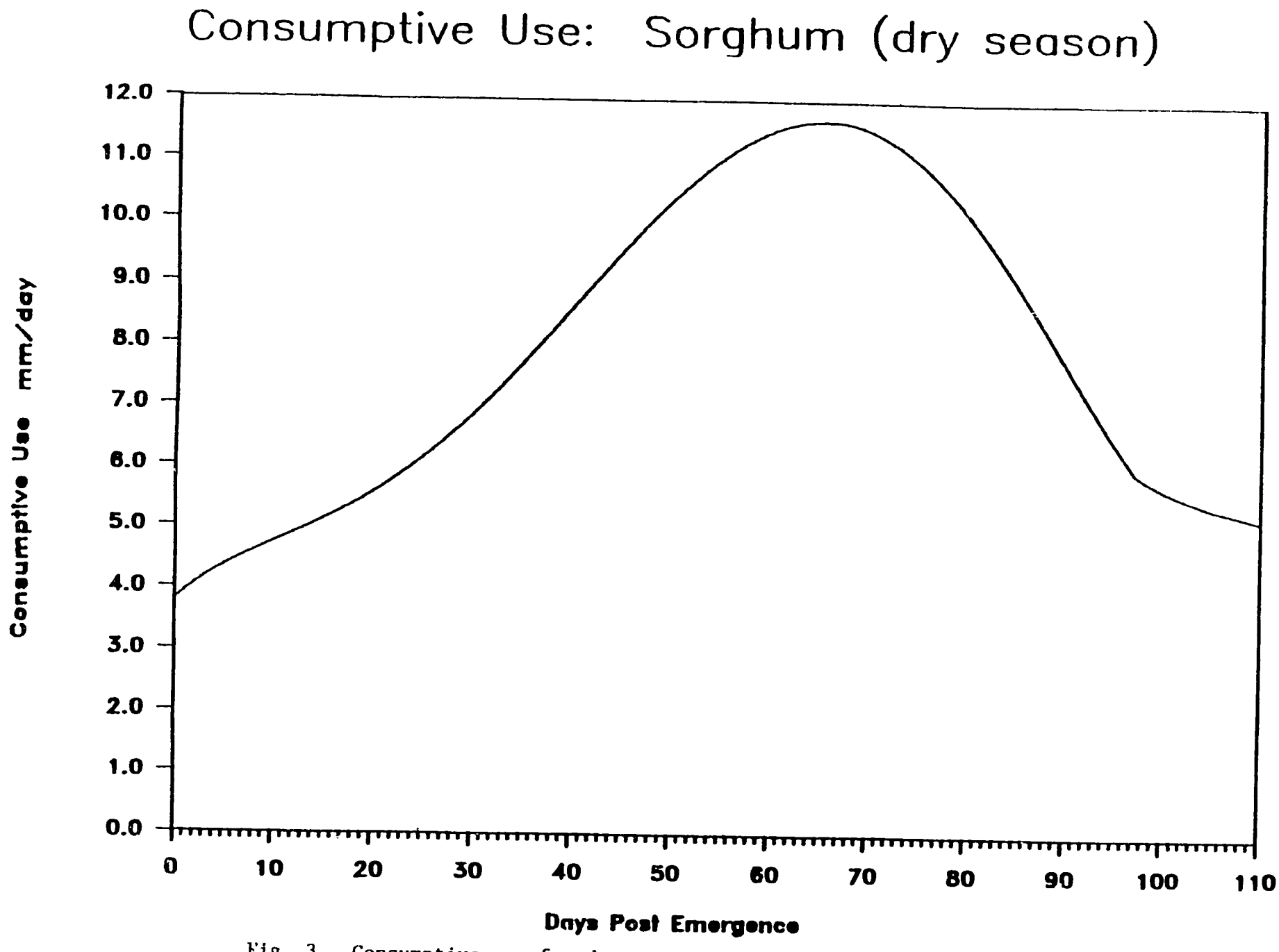


Fig. 3. Consumptive use for dry season sorghum - Senegal River Valley



13

time must be allowed for maintenance. Since down time for maintenance of the pump, engine and irrigation system should be included, the actual time to complete an irrigation should be F minus one or two days. Obviously, when crop water use is less than maximum, the irrigation interval will be greater.

Net irrigation depth for non-ponded crops such as sorghum is governed by available soil water holding capacity. For a soil with an available holding capacity of 0.16 cm water/cm soil and a crop rooting depth of 120 cm (such as can be assumed for sorghum), the total water holding capacity is 19.2 cm. Depletion of water below 50% of the available capacity will, however, result in significant yield reductions. Thus, depletion should be limited to 9.5 cm which will also be the net depth to apply per irrigation. For paddy rice where the soil surface is submerged and a ponded depth of water is maintained, the depletion level is limited to 5 cm of water so that the ponded depth is maintained between 10 and 15 cm of water when the rice is at full height.

To size a pumping system it is assumed that dry season sorghum will have the highest daily water requirement and will thus control the pump capacity. From Fig. 3 it can be seen that the peak consumptive use rate for sorghum during the dry season is about 11.5 mm/day. Thus, from Eq. 3 the minimum irrigation interval will be:

$$F = 95 \text{ mm}/11.5 \text{ mm/day} = 8.26 \text{ days}$$

Providing 1.26 days for maintenance each irrigation period during the peak irrigation season allows 7 days to complete the irrigation. It is doubtful that the system can be operated 24 hours per day even for 7 days. However, 18 hours per day allows ample of time for fueling and operator rest. Using these values in Eq. 2 and assuming a 60% application efficiency so that the gross depth per irrigation is 95 mm/.6 = 158.3 mm, the required system capacity is:

$$Q = 2.78 \times 10^{-4} * 250000 * 0.1583/(7 * 18) = 8.7 \times 10^{-2} \text{ m}^3/\text{s}.$$

Power requirements can be determined from the relationship:

$$P(kW) = K * Qh/e \qquad (4)$$

where P(kW) is power (that required from the diesel engine at the power take-off), Q is the system capacity in $m^3/s$, h is the total dynamic head (elevation, pressure, velocity, and friction losses) in m, K is a constant equal to 9.807 and e is the efficiency of the pump. In this example the elevation head is assumed to be 10 m. If a delivery pipe 20 cm in diameter is used and the pipe is 30 meters in length, the friction loss will be about 3.35 m. Velocity and pressure heads are negligible compared to the other requirements. Thus, total dynamic head is 13.35 m. Substituting these values into Eq. 4 gives:

$$P(kW) = 9.807 * (8.7 \times 10^{-2} \text{ m}^3/\text{s} * 13.35)/0.6 = 19 \text{ kW}$$



14

if the pump efficiency is assumed to be 60%. In actual practice an engine larger than 19 kW will be selected.[8]

Table 1 summarizes crop pumped water and hydraulic (pumping) energy requirements for a 25 ha irrigation perimeter for each of the crops and cropping periods selected. For the entire cropping season, total pumped water requirements are 532,700 $m^3$ for each 25 ha perimeter. How the total dynamic pumping head is affected by fluctuations in river levels is also shown in Table 1. Converting pumped water requirements to hydraulic (pumping) energy is determined by:

$$E(kWh) = 2.724 \times 10^{-3} * V * h$$

where V is the total volume of water pumped and h is the total dynamic head. Total hydraulic energy needs are 15,700 kWh/25 ha perimeter.

For the dispersed pumping option, 25 kW direct drive diesel pumpsets are used for supplying water. Because water is pumped directly from the river which fluctuates throughout the season, the pumpsets are mounted on floats that are secured to the shore with cables. The engines and pumps considered for this option are matched sets, but typically have energy efficiencies of about 22% and 60%, respectively. With a net system efficiency of 13%, fuel consumption is approximately 0.7 l/kWh. Each of the 16 irrigation perimeters are assumed to have a dedicated raft-mounted 25 kW diesel pumpset. The installed cost of each diesel pumpset and float is $20,000 with a useful life of 7 years for the engine and 10 years for the pump. Maintenance costs are assumed to be $1,000/yr. Technical assumptions and costs for this pumping option are summarized in Table 2.

The centralized diesel/generation power option is assumed to have two 160 kW units coupled to a minigrid of various lengths. At the generation site, power is stepped-up from 400 V to 6600 V and distributed over a minigrid to five step-down transformers where it is then distributed over secondary lines to the dispersed irrigation pumps and to other rural and village uses. In order to minimize the length of the high voltage minigrid, it is assumed that the generator would be centrally located. For this example, the total extent of the high voltage grid is considered under four different lengths: 4 km, 6 km, 8 km, and 10 km.

The central diesel plant (engine and generator) is assumed to have an efficiency of 25% which is typical for units of this size. The efficiency of the transmission and distribution network depends on many factors regarding line sizes, connections, and transformers. However, for this example the minigrid and electric motor are assumed to have an efficiency of 85%. If the electric pumps have an efficiency of 60%, the

---

[8]An engine of about 25 kW will be selected to account for inefficiencies of drive couplings, etc. This is very similar to pump set sizes actually in use in the region.



15

Table 1. Crop pumped water and hydraulic energy requirements - Senegal River Valley

| Month | Sorghum Volume $m^3$ | Sorghum Energy (kWh) | Rice Volume ($m^3$) | Rice Energy (kWh) |
|---|---|---|---|---|
| Jan. | 32380 | 917 | | |
| Feb. | 79560 | 2426 | | |
| Mar. | 143520 | 4727 | | |
| Apr. | 90720 | 3161 | | |
| May | 10420 | 369 | | |
| June | | | | |
| July | | | 64440 | 1829 |
| Aug. | | | 25920 | 558 |
| Sept. | | | 21810 | 364 |
| Oct. | | | 63930 | 1350 |
| Nov. | | | | |
| Dec. | | | | |
| Total | 356600 | 11600 | 176100 | 4101 |

Notes: Crop water requirements for both crops were based on a 25 ha perimeter. Nine irrigations were applied to sorghum beginning January 15 and ending May 5. To apply a gross irrigation depth of 0.158 m the irrigation interval varied from 21 to 7 days. Eight irrigations were applied to the rice crop beginning July 15 and ending October 30. The irrigation interval for rice varied from 32 to 8 days. Gross irrigation depth was 200 mm at the beginning of the growing season, 126 mm after 8 days into the growing, and 63 mm during the remainder of the growing season. Total dynamic head ranged from 10.4 m to 13.4 m during the dry season and from 5.3 m to 10.8 m during the wet season.



-16

Table 2. Technical assumptions for dispersed diesel pumpsets[a]
Senegal River Valley

| | |
|---|---|
| Dispersed diesel pumpset size[b] | 25 kW |
| Number of units for a 400 ha perimeter[c] | 16 |
| Engine efficiency | 22% |
| Pump efficiency | 60% |
| Net system efficiency | 13% |
| Annual hydraulic energy | 15,700 kWh |
| Annual shaft energy | 26,170 kWh |
| Operating hours per year | 1046 |
| Investment cost | |
| - engine | $4200 |
| - pump/float | $3000 |
| - other (pipes, fuel tank, etc.) | $8700 |
| - installation | $4100 |
| Life of equipment | |
| - engine | 7 years |
| - pump/float | 10 years |
| Fuel use | 0.7 l/kWh |
| Annual maintenance[d] | $1000 |

[a]Source: Derived from A.D. Little Inc. (undated).
[b]Lister HR-3 engines.
[c]Irrigation perimeters are dispersed, no significant economies are assumed for using fewer larger sized engines, or multiple pumps on single rafts.
[d]Includes oil, labor, spare parts, and two pump operators.



17

net efficiency for the entire minigrid electric system is about 13%. Based on these efficiencies, the centralized generator supplies approximately 492,550 kWh/yr of electricity to operate the irrigation pumps which corresponds to about 18% of system load. To more fully utilize the capacity of this larger diesel plant, electric loads ranging from 20% to 50% are assumed for various village uses and rural industries (lighting, agroprocessing, a school and clinic, cold-storage, households, etc.)[9] The technical assumptions as well as installation and operating costs for the minigrid power option are summarized in Table 3.

South Central African Irrigation System

Although some gravity irrigation systems exist in Zimbabwe and Zambia, pumped irrigation is not widely practiced in South Central Africa. Thus, for illustration purposes, the South Central African example is somewhat hypothetical. The Okavango Delta Region of Botswana, was chosen as a site for small-scale pumped irrigation. Some small plot irrigation is currently practiced where water is pumped from the Okavango swamp formed at the delta of the Okavango River (Schevenius, 1987).

In this example a small maize and vegetable perimeter of about 4 ha was selected. The Okavango River is a relatively large river which heads in Angola and has no outlet to the sea but drains toward the Kalahari desert ending in the Okavango Delta (or swamp). The southeastern edge of this delta is at an elevation of over 900 meters. Floods in the Okavango Delta peak in July, and some "flood recession" agriculture is practiced in the delta as water levels drop. The rainy season in the area begins about the first of November and runs through March. Nearly 90% of the rainfall occurs in this period. Thus, the floods occur in the middle of the dry season

Soils in the area are sandier than those of the Senegal River flood plain. The small irrigation plots would be located on soils which may be classed as silt loams to sandy loams with available soil water holding capacities ranging from 0.11 to 0.23 cm water/cm soil. Shallow wells are reasonable sources of water for the small systems considered. It is assumed that "sand points" can be driven to tap the water table adjacent to the swamp to give reasonable water yields throughout the year. Pumping depths should range from 2.5 to 3 meters (Schevenius, 1987). Water table fluctuations will be minimal throughout the year since the floods and the rainy season occur at opposite times of the year and thus should provide reasonably continuous recharge for the surficial aquifer being tapped. As was the case in Senegal, the only cost of water is the pumping costs.

---

[9]In this example and in the one that follows, no consideration is given to how a small electric minigrid would operate on a day-to-day basis. Presumably, there would be considerable flexibility in scheduling irrigation pumping during off-demand periods. Maintenance on the system would be scheduled between cropping seasons.

Table 3. Technical assumptions for a centralized minigrid[a] - Senegal River Valley.

| | |
|---|---|
| **Diesel/Generator** | |
| 2 - 160 kW units | 320 kW |
| Plant efficiency (engine and generator) | 25% |
| Installed cost[b] | $250,000 |
| Annual operations | $10,000 |
| Annual Maintenance | $10/hr |
| Fuel use | 0.37 l/kWh |
| Plant life | 10 years |
| **Electric Motor/Pumps** | |
| Number of units | 16 |
| Rating of units | 25 kW |
| Pump efficiency | 60% |
| Pump/float | $4000 |
| Installation[c] | $3000 |
| Annual maintenance | $200 |
| Life of units | 10 years |
| **Minigrid** | |
| Transformation[d] | $8000 |
| Distribution lines (6600 V) | $8500/km |
| Annual maintenance | $200/km |
| Minigrid and motor efficiency | 85% |

[a]Source: Derived from A.D. Little Inc. (undated).
[b]Includes interrupter, step-up transformer (400/6600 V), controls, etc.
[c]Includes piping, controls, cables, etc.
[d]Costs are for interrupter and step-down transformer (6600/380 V).

Typical crops in the area include maize and cabbage. Sub-freezing temperatures may occur in the cold season (dry season); thus, cabbage is an excellent crop for that season with a typical planting date of mid-May and harvest in mid-August. Maize is planted in early December and is harvested in late March to early April.

As in the Senegal Valley, it is assumed that the most likely irrigation system will be a basin system with application efficiencies of 40% to 60%.

Reference crop evapotranspiration was developed for this area using the same approach as discussed previously. Figure 4 illustrates the reference crop ET for the entire year. Consumptive use rates for the two crops are shown in Figs. 5 and 6.

For this illustration a soil water holding capacity of 0.15 cm water/cm soil is assumed. Typical rooting depth for maize is 120 cm and that for cabbage is 50 cm. Thus, for maize available water in the root zone is 18 cm and for cabbage 7.5 cm. Maize will be irrigated when 50% of the available water is depleted requiring a net application depth of 9 cm. Cabbage is a crop more susceptible to water stress; thus, an allowable depletion level of only 40% is used, giving a net application depth of 3 cm per irrigation.

Given the extreme temperature possibilities, cabbage is grown only in the cool season and maize only in the hot season. The peak consumptive use rate of cabbage is higher than that of maize and will thus dictate the pumping plant size. With a peak consumptive use rate of 6.5 mm/day and 30 mm of net water per irrigation the maximum irrigation interval during peak use is:

$$F = 30 \text{ mm}/6.5 \text{ mm/day} = 4.62 \text{ days}$$

Allowing the 0.62 days for maintenance and assuming 10 hours of operation per day gives a pumping capacity of:

$$Q = 2.78 \times 10^{-4} * (40000 * 0.05)/(4 * 10) = 0.014 m^3/s$$

In the example, elevation head is assumed to be 3.5 meters. If a 5.0 cm diameter pipe is used the friction loss will be about 1.75 meters for a 15 meter length. This gives a total dynamic head of 5.25 meters. As before, the velocity head is negligible (<0.1 m). The power requirement is:

$$P(kW) = 9.807 * (0.014 * 5.25)/.6 = 1.2 \text{ kW}$$

Table 4 summarizes crop pumped water and hydraulic (pumping) energy requirements for a 4 ha perimeter for each of the crops and cropping periods selected. Total pumped water requirements are 72,000 $m^3$/4 ha perimeter or 1,440,000 $m^3$ for the entire irrigation area. Hydraulic



20

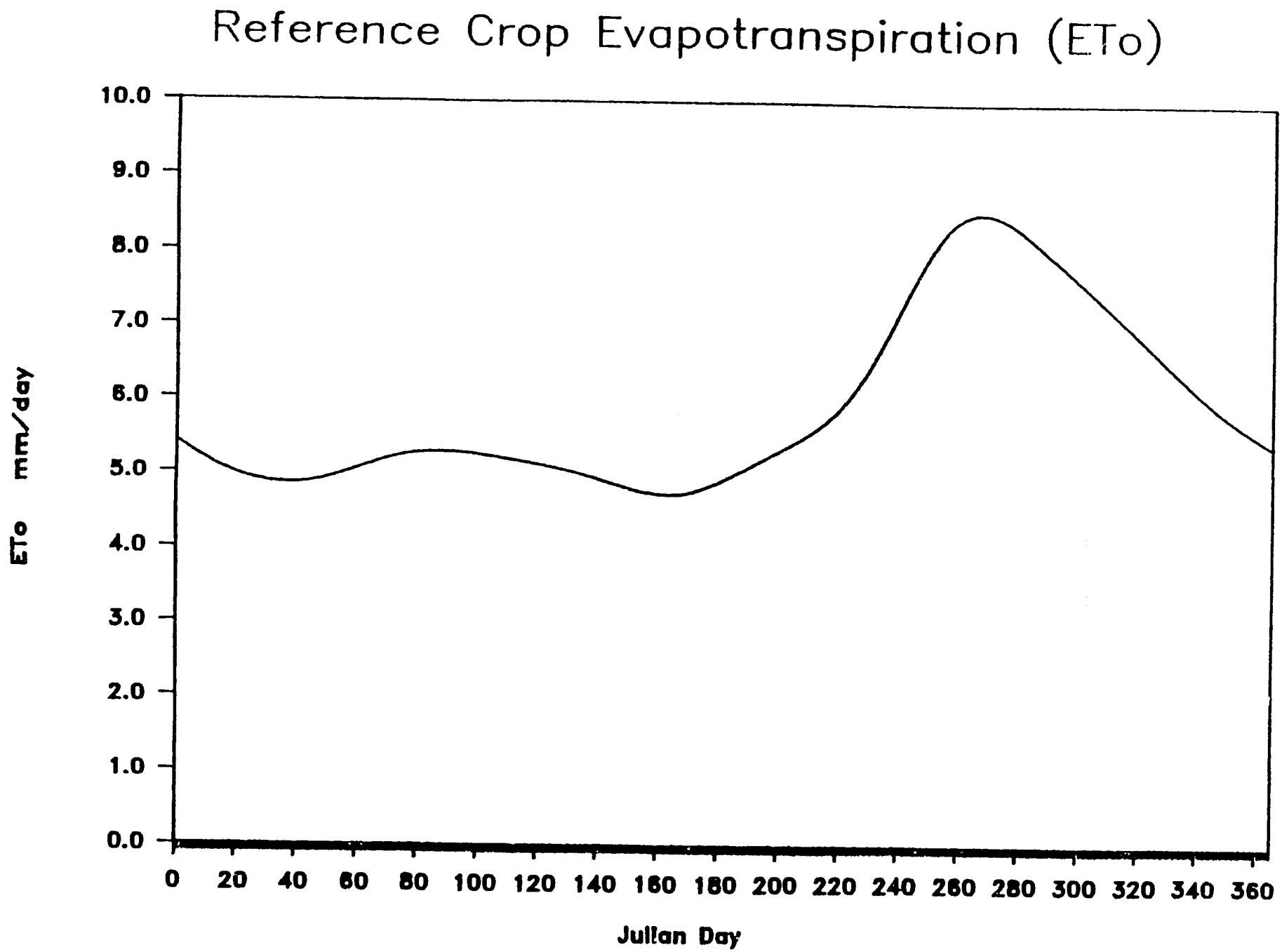


Fig. 4. Reference crop evapotranspiration - Okavango Delta Region

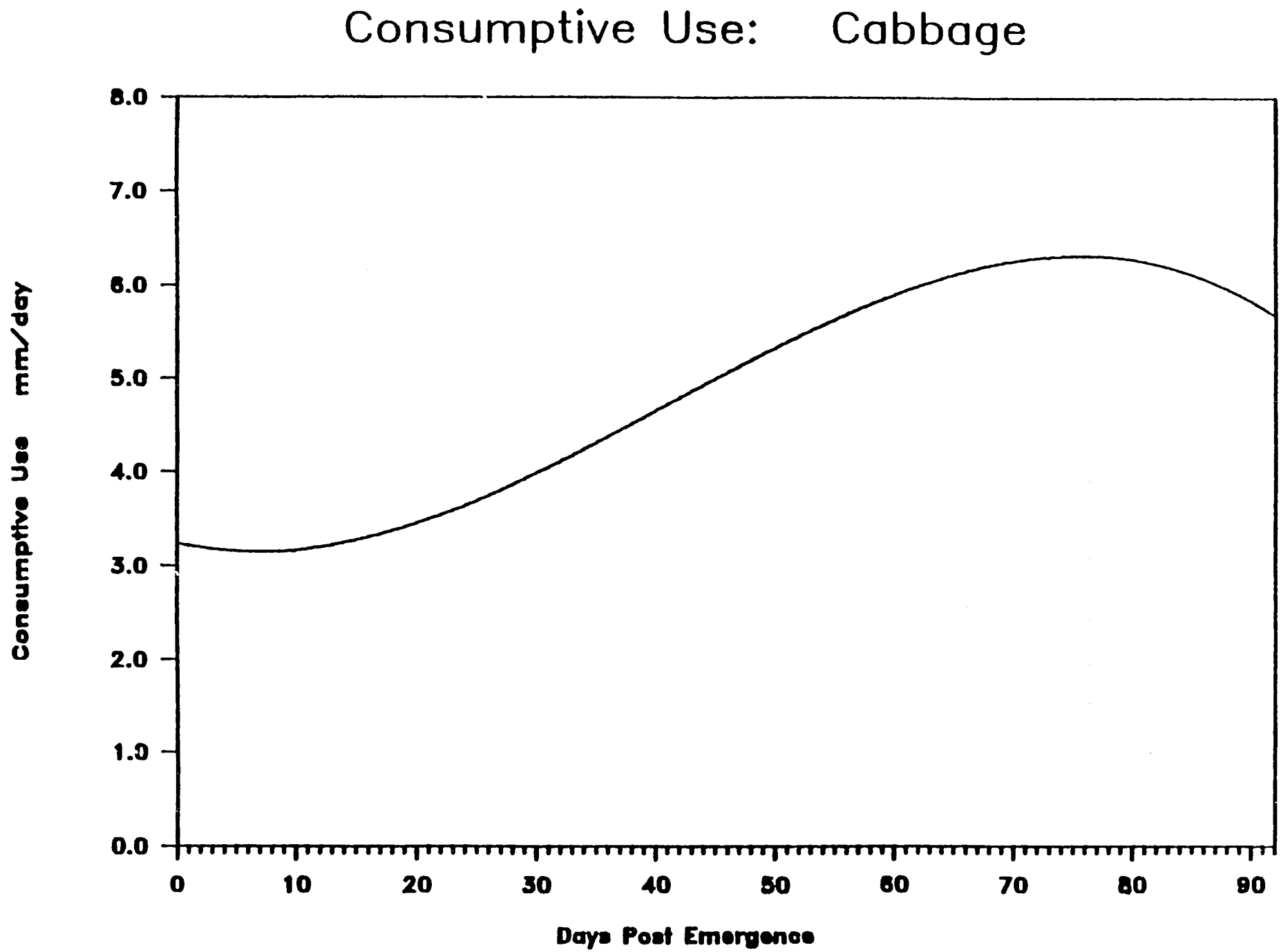


Fig. 5. Consumptive use for dry season cabbage - Okavango Delta Region

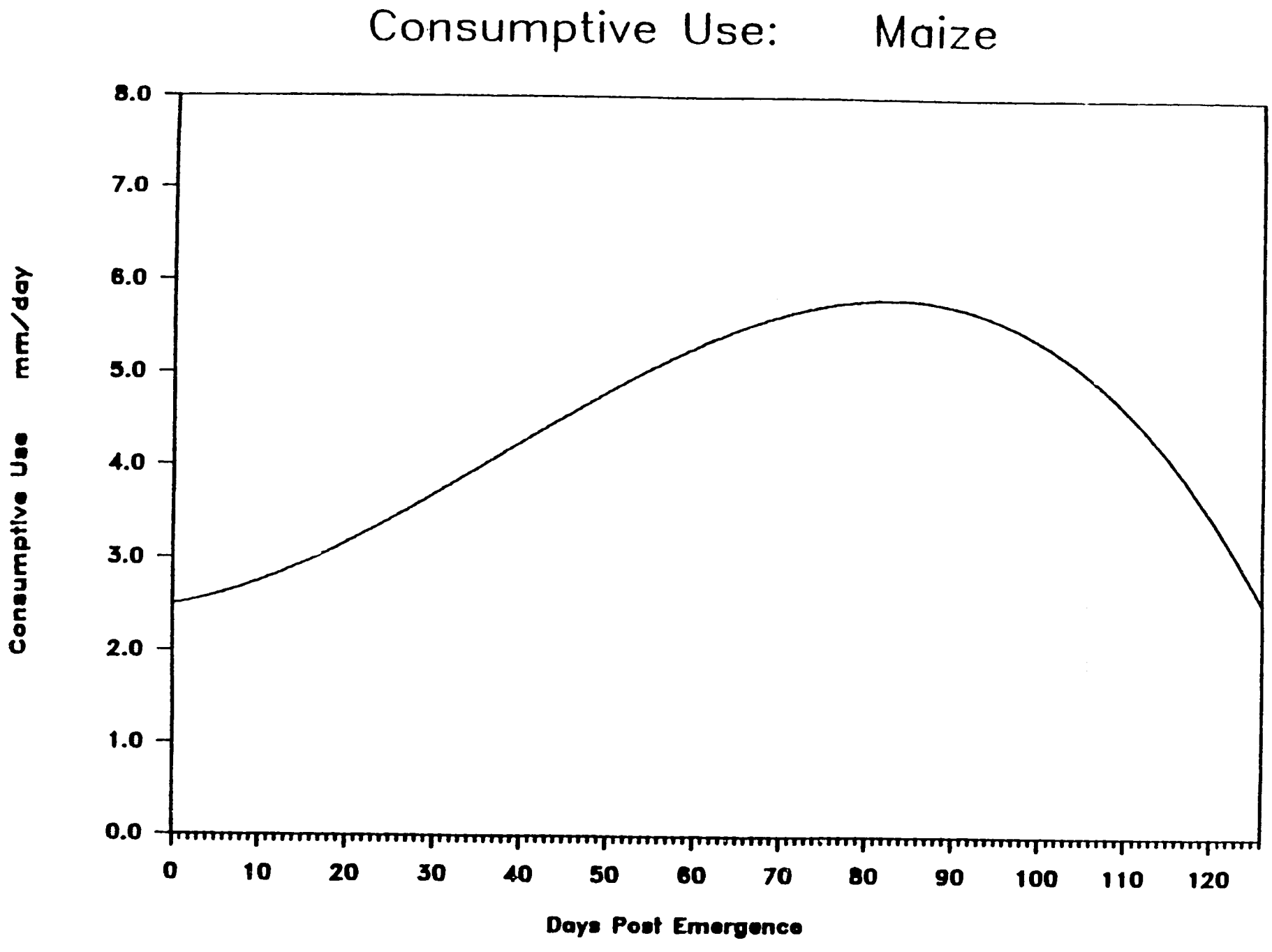


Fig. 6. Consumptive use for wet season maize - Okavango Delta Region

Table 4. Crop pumped water and hydraulic energy requirements - Okavango Delta Region.

| Month | Maize | | Cabbage | |
|---|---|---|---|---|
| | Volume ($m^3$) | Energy (kWh) | Volume ($m^3$) | Energy (kWh) |
| Jan. | 9,529 | 136.3 | | |
| Feb. | 10,719 | 153.3 | | |
| Mar. | 13,534 | 193.6 | | |
| April | 2,571 | 36.8 | | |
| May | | | 3,000 | 42.9 |
| June | | | 8,000 | 114.4 |
| July | | | 12,000 | 171.2 |
| Aug. | | | 7,000 | 100.1 |
| Sept. | | | | |
| Oct. | | | | |
| Nov. | | | | |
| Dec. | 5,647 | 0.8 | | |
| Total | 42,000 | 600.8 | 30,000 | 428.6 |

NOTES: Crop water requirements for both crops were based on a 4 ha perimeter. Fifteen irrigations were applied to cabbage beginning May 15 and ending August 15. The irrigation interval ranged from 13 to 4 days. During each interval 50 mm of water was applied. Seven irrigations were applied to maize beginning December 1 and ending April 4. Intervals ranged from 32 to 6 days to apply a gross irrigation depth of 150 mm. A total dynamic head of 5.25 m was used to calculate hydraulic energy requirements during both cropping seasons.

(pumping) energy requirements were calculated as before. Pumping energy is 1,029 kWh/4 ha perimeter and 20,588 kWh for the 80 ha irrigation area.

Small 2.5 kW direct-drive diesel pumpsets are assumed to be used for supplying water under the dispersed pumping option. Engines and pumps of this size are not very efficient (20% and 50%, respectively) with fuel consumption at approximately 0.93 l/kWh. Each of the 20 irrigation perimeters are equipped with a diesel pumpset. The installed cost of each unit is $3,000 and they are replaced after 5 years. Technical assumptions and costs for this power option are summarized in Table 5.

The centralized diesel station is assumed to have two 25 kW units coupled to a minigrid of lengths varying between 2 and 8 km. At the generation site power is stepped-up and distributed over a grid to two step-down transformers and then distributed over secondary lines to electric pumps and to other uses. The efficiencies of the power system are assumed to be 20% for the diesel/generator, 80% for the minigrid and electric motor, and 50% for the pump. Diesel fuel consumption is about 0.46 l/kWh. The centralized generator supplies approximately 51,500 kWh/yr of electricity to operate the 20 irrigation pumps. As with the Senegal River example, power is supplied to village uses and to cottage industries. Loads of 15% to 40% are assumed. Technical assumptions as well as installation and operating costs for the minigrid power option are summarized in Table 6.

## RESULTS

This section summarizes the cost analysis and discusses the results of the comparison between the dispersed diesel power option and the centralized minigrid. Levelized annual costs are used to summarize the cost of water for each power option and agroclimatic region (see Appendix).

### Sahelian Irrigation System

The cost analysis for the dispersed diesel pumpset option is straightforward and summarized in Table 7. The total present value of the 16 diesel pumpset system was found to be $1,125,450 or $132,240 when expressed as a levelized annual cost. With 80 irrigated hectares and 8.5 x $10^6$ $m^3$ of pumped water the resultant cost of water is $330/ha or $0.016/$m^3$.

The centralized minigrid cost analysis is summarized in Tables 8, 9, 10, and 11. In Table 8 the cost of the diesel/generation plant is computed for load factors ranging from 20% to 50%. Total present value costs range from about $1.3 million to $2.6 million. The difference in costs is from increased maintenance and fuel use associated with higher loads. Power costs ($/kWh) are computed in Table 10 under four alternative grid lengths (Table 9) and eight load factors (Table 8). The cost of water is then calculated in Table 11 by including the cost of the electric pumps and the power costs from Table 10. Table 11 shows that



25

Table 5. Technical assumptions for dispersed diesel pumpsets[a] - Okavango Delta Region.

| | |
|---|---|
| Dispersed diesel pumpset | 2.5 kW |
| Number of units in irrigation area | 20 |
| Engine efficiency | 20% |
| Pump efficiency | 50% |
| Annual hydraulic energy | 1029 kWh |
| Annual shaft energy | 2059 kWh |
| Operating hours per year | 824 |
| Installed cost per unit | $3,000 |
| Life of equipment | 5 years |
| Maintenance[b] | $300 |
| Fuel use | 0.93 l/kWh |

[a]Source: Samuels et al., (1987).
[b]The cost of an attendant is not included.



26

Table 6. Technical assumptions for a centralized minigrid[a] - Okavango Delta Region.

| | |
|---|---|
| Diesel/Generator | |
| 2 - 25 kW units | 50 kW |
| Plant efficiency | 20% |
| Installed cost[b] | $50,000 |
| Annual operations | $6,000 |
| Annual maintenance | $3/hr |
| Fuel use | 0.46 l/kWh |
| Plant life | 10 years |
| Electric Motor/Pumps | |
| Number of units | 20 |
| Rating of units | 1 kW |
| Pump efficiency | 50% |
| Installed cost[c] | $1,200 |
| Annual maintenance | $75 |
| Life of units | 10 years |
| Minigrid | |
| Transformation[d] | $8000 |
| Distribution lines | $8500/km |
| Annual maintenance | $200/km |
| Minigrid and motor efficiency | 80% |

[a]Source: Derived from A.D. Little Inc. (undated).
[b]Includes step-up transformation at generation site.
[c]Includes piping, controls, cables, etc.
[d]Costs are for interrupter and step-down transformer.

Table 7. Financial analysis for dispersed diesel pumpsets - Senegal River Valley

Total investment cost = $20,000 * 16 = $320,000

Present value of engine replacements after 7 and 14 years = (0.513 + 0.263) * $4200 * 16 = $52,150

Present value of pumps and floats after 10 years = (0.386) * $3,000 * 16 = $18,530

Present value of annual maintenance cost = ($1,000 * 16)/0.1175 = $136,170

Present value of annual fuel cost = ($0.40/l * 15,700 kWh/yr * 0.7 l/kWh * 16)/0.1175 = $598,600

Total present value = $320,000 + $52,150 + $18,530 + $136,170 + $598,600 = $1,125,450

Levelized annual cost = $1,125,450 * 0.1175 = $132,240

Water costs = $132,240/400 ha = $331/ha

$132,240/8,523,200 $m^3$ = $0.0155/$m^3$

Note: Based on a discount rate of 10% and an evaluation period of 20 years.



28

Table 8. Financial analysis for a centralized generation plant serving multiple loads - Senegal River Valley.

| | | | | | | | |
|---|---|---|---|---|---|---|---|
| Load factor | 20% | 25% | 30% | 35% | 40% | 45% | 50% |
| Annual output[a] | 560,640 | 700,800 | 840,960 | 981,120 | 1,121,280 | 1,261,440 | 1,401,600 |
| Diesel/generator plant costs | | | | | | | |
| Installation | 250,000 | 250,000 | 250,000 | 250,000 | 250,000 | 250,000 | 250,000 |
| Annual operations | 10,000 | 10,000 | 10,000 | 10,000 | 10,000 | 10,000 | 10,000 |
| Annual maintenance[b] | 17,520 | 21,900 | 26,280 | 30,660 | 35,040 | 35,420 | 43,800 |
| Annual fuel use (l) | 208,780 | 260,980 | 313,170 | 365,370 | 417,680 | 469,760 | 521,960 |
| Annual fuel cost ($0.40/l) | 83,510 | 104,390 | 125,270 | 146,150 | 167,070 | 187,900 | 208,780 |
| Present value of costs | | | | | | | |
| Installation | 250,000 | 250,000 | 250,000 | 250,000 | 250,000 | 250,000 | 250,000 |
| Replacement[c] | 96,500 | 96,500 | 96,500 | 96,500 | 96,500 | 96,500 | 96,500 |
| Operation and maintenance | 234,210 | 271,490 | 308,770 | 346,040 | 383,320 | 420,600 | 457,870 |
| Fuel | 710,720 | 888,430 | 1,066,130 | 1,243,830 | 1,421,870 | 1,599,150 | 1,776,850 |
| Total present value[d] | 1,291,430 | 1,506,420 | 1,721,400 | 1,936,370 | 2,151,690 | 2,366,250 | 2,581,220 |

[a]Load for the electric pumps is 523,330 kWh or about 12%.
[b]Based on $10/hr of plant operation.
[c]Plant replaced after 10 years.
[d]Based on a discount rate of 10% and evaluation period of 20 years.

Table 9. Cost of multipurpose minigrid[a] - Senegal River Valley.

| Grid length | 4 km | 6 km | 8 km | 10 km |
|---|---|---|---|---|
| Distribution - 6600 V | 34,000 | 51,000 | 68,000 | 85,000 |
| Annual maintenance[b] | 6,800 | 10,200 | 13,600 | 17,000 |
| Transformation (6600/380 V)[c] | 40,000 | 40,000 | 40,000 | 40,000 |
| Feeder cables - 10 km (380 V) | 20,000 | 20,000 | 20,000 | 20,000 |
| Total | 100,800 | 121,200 | 141,600 | 162,000 |

[a]Sources: Derived from A. D. Little (undated) and NRECA (1983).
[b]Present value of maintenance on 6600 V lines is $200/0.1175 per km.
[c]Includes five transformation units (interrupts, step-down transformer, etc.) with four principally dedicated to pumps and one to other rural uses.

Table 10. Cost of electricity supplied to the minigrid - Senegal River Valley.

| Grid length (km) | 4 | 6 | 8 | 10 |
|---|---|---|---|---|
| Load factor = 20% | | | | |
| Generation plant[a] | 1,291,430 | 1,291,430 | 1,291,430 | 1,291,430 |
| Minigrid[b] | 100,800 | 121,200 | 141,600 | 162,000 |
| Total present value | 1,392,230 | 1,412,630 | 1,433,030 | 1,453,430 |
| Levelized annual cost | 163,590 | 165,980 | 168,380 | 170,780 |
| Power cost ($/kWh) | 0.292 | 0.296 | 0.300 | 0.305 |
| Load factor = 25% | | | | |
| Generation plant | 1,506,420 | 1,506,420 | 1,506,420 | 1,506,420 |
| Minigrid | 100,800 | 121,200 | 141,600 | 162,000 |
| Total present value | 1,607,220 | 1,627,620 | 1,648,020 | 1,668,420 |
| Levelized annual cost | 188,850 | 190,250 | 193,6400 | 196,040 |
| Power cost ($/kWh) | 0.269 | 0.273 | 0.276 | 0.280 |
| Load factor = 30% | | | | |
| Generation plant | 1,721,400 | 1,721,400 | 1,721,400 | 1,721,400 |
| Minigrid | 100,800 | 121,200 | 141,600 | 162,000 |
| Total present value | 1,822,200 | 1,842,600 | 1,863,000 | 1,883,400 |
| Levelized annual cost | 214,110 | 216,510 | 218,900 | 221,300 |
| Power cost ($/kWh) | 0.255 | 0.257 | 0.260 | 0.263 |
| Load factor = 35% | | | | |
| Generation plant | 1,936,370 | 1,936,370 | 1,936,370 | 1,936,370 |
| Minigrid | 100,800 | 121,200 | 141,600 | 162,000 |
| Total present value | 2,037,170 | 2,057,570 | 2,077,970 | 2,098,370 |
| Levelized annual cost | 239,370 | 241,760 | 244,160 | 246,560 |
| Power cost ($/kWh) | 0.244 | 0.246 | 0.249 | 0.251 |
| Load factor (40%) | | | | |
| Generation plant | 2,151,690 | 2,151,690 | 2,151,690 | 2,151,690 |
| Minigrid | 100,800 | 121,200 | 141,600 | 162,000 |
| Total present value | 2,252,490 | 2,272,890 | 2,293,290 | 2,313,690 |
| Levelized annual cost | 264,670 | 267,060 | 269,460 | 271,860 |
| Power cost ($/kWh) | 0.236 | 0.238 | 0.240 | 0.242 |

Table 10. Cost of electricity supplied to the minigrid - Senegal River Valley. (Continued)

| Grid length (km) | 4 | 6 | 8 | 10 |
|---|---|---|---|---|
| Load factor = 45% | | | | |
| Generation plant | 2,366,250 | 2,366,250 | 2,366,250 | 2,366,250 |
| Minigrid | 100,800 | 121,200 | 141,600 | 162,000 |
| Total present value | 2,467,050 | 2,487,450 | 2,507,850 | 2,528,250 |
| Levelized annual cost | 289,880 | 292,280 | 294,670 | 297,070 |
| Power cost ($/kWh) | 0.230 | 0.232 | 0.234 | 0.236 |
| Load factor = 50% | | | | |
| Generation plant | 2,581,220 | 2,581,220 | 2,581,220 | 2,581,220 |
| Minigrid | 100,800 | 121,200 | 141,600 | 162,000 |
| Total present value | 2,682,020 | 2,702,420 | 2,722,820 | 2,743,220 |
| Levelized annual cost | 315,140 | 317,530 | 319,930 | 322,330 |
| Power cost ($1/kWh) | 0.225 | 0.227 | 0.228 | 0.230 |

[a]From Table 8.
[b]From Table 9.



32

Table 11. Cost of water with centralized minigrid - Senegal River Valley.

| Grid length (km) | 4 | 6 | 8 | 10 |
|---|---|---|---|---|
| Installed motor/pump cost | 112,000 | 112,000 | 112,000 | 112,000 |
| Present value of replacements[a] | 24,700 | 24,700 | 24,700 | 24,700 |
| Present value of annual maintenance | 27,230 | 27,230 | 27,230 | 27,230 |
| Total present value | 163,930 | 163,930 | 163,930 | 163,930 |
| Levelized annual cost | 19,260 | 19,260 | 19,260 | 19,260 |
| Annual cost of power[b] | | | | |
| Load factor = 20% | 143,800 | 145,800 | 147,760 | 150,230 |
| Load factor = 25% | 132,500 | 134,470 | 135,940 | 137,910 |
| Load factor = 30% | 125,600 | 126,590 | 128,060 | 137,910 |
| Load factor = 35% | 120,180 | 121,170 | 122,640 | 123,630 |
| Load factor = 40% | 116,240 | 117,230 | 118,210 | 119,200 |
| Load factor = 45% | 113,290 | 114,270 | 115,260 | 116,240 |
| Load factor = 50% | 110,820 | 111,810 | 112,300 | 113,290 |
| Annual cost of water | | | | |
| Load factor = 20% ($/ha) | 408 | 413 | 418 | 424 |
| ($/1m$^3$) | 0.0191 | 0.0194 | 0.0196 | 0.0199 |
| Load factor = 25% ($/ha) | 379 | 384 | 388 | 393 |
| ($/m$^3$) | 0.0178 | 0.0180 | 0.0182 | 0.0184 |
| Load factor = 30% ($/ha) | 362 | 365 | 368 | 372 |
| ($/m$^3$) | 0.0170 | 0.0171 | 0.0173 | 0.0175 |
| Load factor = 35% ($/ha) | 349 | 351 | 355 | 357 |
| ($/m$^3$) | 0.0164 | 0.0165 | 0.0166 | 0.0168 |
| Load factor = 40% ($/ha) | 339 | 341 | 344 | 346 |
| ($/m$^3$) | 0.0159 | 0.0160 | 0.0161 | 0.0162 |
| Load factor = 45% ($/ha) | 331 | 334 | 336 | 339 |
| ($/m$^3$) | 0.0156 | 0.0157 | 0.0158 | 0.0159 |
| Load factor = 50% ($/ha) | 325 | 328 | 329 | 331 |
| ($/m$^3$) | 0.0153 | 0.0154 | 0.0155 | 0.0156 |

[a]Pumps replaced after 10 years.
[b]Based on 492,550 kWh.

pumping costs are not particularly sensitive to grid length. Costs vary by only \$16/ha (<\$0.001/$m^3$) at a 20% load and by only \$6/ha at a 50% load factor. However, water pumping costs are somewhat sensitive to load. The difference in water costs varies from \$83/ha (grid length of 4 km) to \$93/ha (grid length of 10 km) for loads of 20% and 50%, respectively.

A comparison of the two irrigation power options is illustrated in Fig. 7. Figure 7 shows cubic meter water costs as a function of load under four grid lengths and for the dispersed diesel pumping option. Water pumping costs are higher under the centralized grid for load factors under 45% to 50% depending on grid length. The maximum difference in water pumping costs is, however, no greater than about 20%. This difference declines to about 10% if one considers some reasonable estimate of rural demand, say a 30% load, for the excess power. In Fig. 7 example electric power demands are shown for agroprocessing, cottage industries, cold-storage, and village uses (school, clinic, and lighting) that can increase the load on the minigrid to over 30%. At this level of demand on the minigrid water pumping costs are very competitive with the dispersed diesel pumping option. Not quantified here are the benefits associated with greater reliability, simplified operation, and the provision of power to stimulate rural development.

South Central African Irrigation System

The basis for the Okavango Delta cost analysis is identical to that of the previous example. Table 12 summarizes the analysis of the dispersed pumpset option with levelized annual costs of about \$25,500/yr. This cost translates into a water cost of \$319/ha or \$0.018/$m^3$. Tables 13, 14, 15, and 16 provide the analysis for the minigrid power option.

Table 16 and Fig. 8 summarize water costs for the various load factors and grid lengths. Costs range from a high of \$0.0265/$m^3$ to a low of \$0.0162/$m^3$ as compared to the dispersed diesel pumping cost of \$0.018/$m^3$. Because the cost of the grid is a much larger proportion of levelized annual costs, power costs are more sensitive to increases in grid length in this example. A 4 km grid length and a 30% load on the minigrid would provide for nearly the same pumping cost under both power options. As discussed above, reasonable assumptions about rural power demands could easily provide a minigrid with a load of 30%. Again, the benefits associated with greater reliability, simpler operation, and provision of power for other uses would favor the minigrid power option.

## CONCLUSIONS

The purpose of this paper was to provide an order-of-magnitude comparison of the cost of water pumping through the use of commonly used diesel pumpsets and a centralized diesel plant coupled to a minigrid. Two examples were constructed representing two different agroclimatic regions of Africa. The results of both examples showed that power costs from a centralized power supply and minigrid were competitive with that of commonly-used direct-drive diesel pumpsets. Water costs for the Fig.

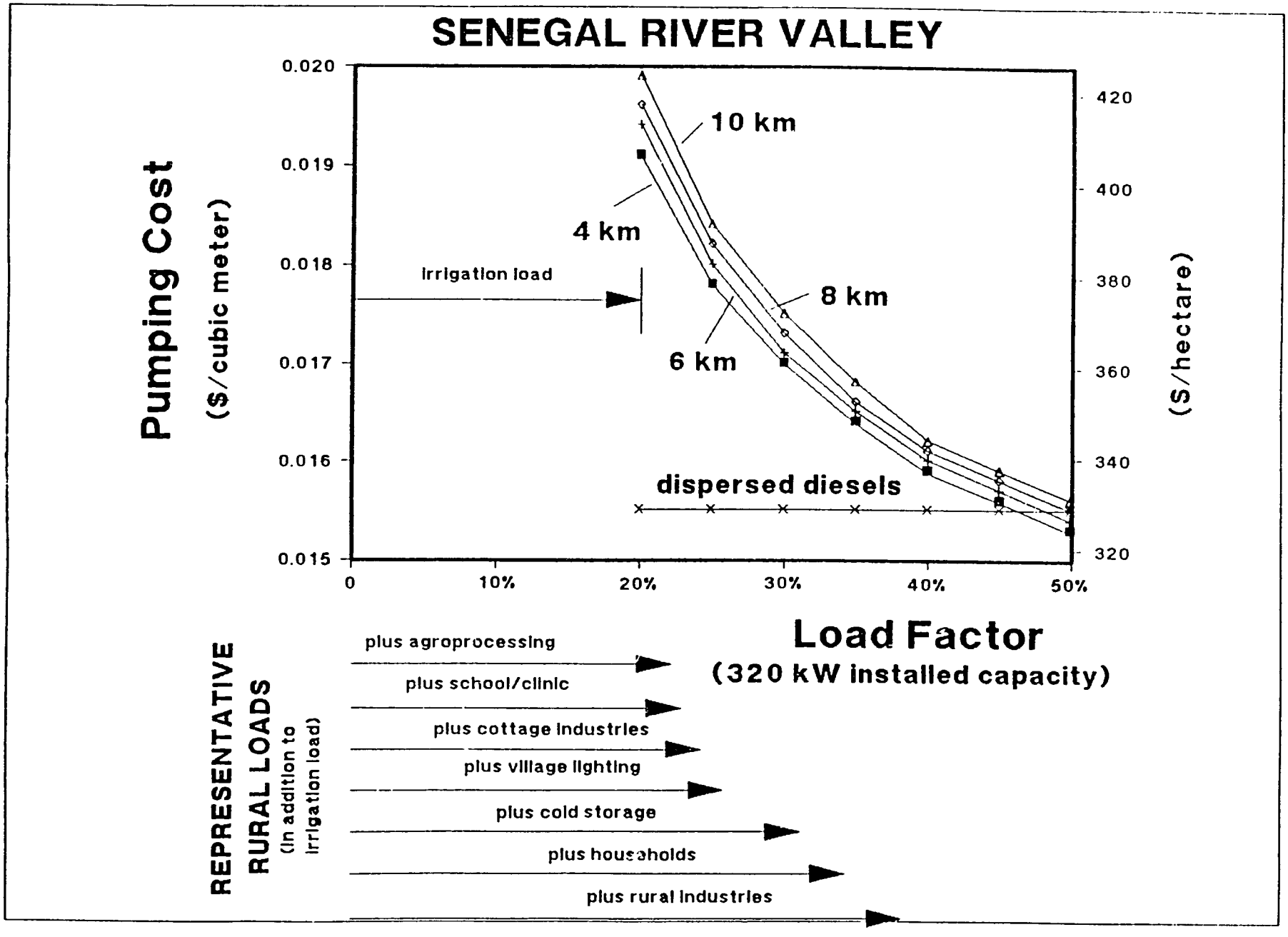


Fig. 7. Water pumping costs under multipurpose minigrid and dispersed diesel pumpsets - Senegal River Valley



35

Table 12. Financial analysis for dispersed diesel pumpsets - Okavango Delta Region.

---

Total investment cost = $3,000 * 20 = $60,000

Present value of engine replacements after 5, 10, and 15 years = (0.621 + 0.386 + 0.239) * $3,000 * 20 = $74,760

Present value of annual maintenance cost = ($300 * 20)/0.1175 = $51,060

Present value of annual fuel cost = $0.40/l * 1029 kWh/yr * 0.93 l/kWh * 20)/0.1175 = $65,160

Total present value = $60,000 + $74,760 + $51,060 + $65,160 = $251,210

Levelized annual cost = $251,210 * 0.1175 = $25,520

Water costs = $25,520/80 ha = $319/ha
$25,520/1,440,000 $m^3$ = $0.018/$m^3$

---

Table 13. Financial analysis for a centralized generation plant serving multiple loads - Okavango Delta Region.

| | | | | | | |
|---|---|---|---|---|---|---|
| Load factor | 15% | 20% | 25% | 30% | 35% | 40% |
| Annual output[a] | 65,700 | 87,600 | 109,500 | 131,400 | 153,300 | 175,200 |
| Diesel/generator plant costs | | | | | | |
| Installation | 50,000 | 50,000 | 50,000 | 50,000 | 50,000 | 50,000 |
| Annual operations | 6,000 | 6,000 | 6,000 | 6,000 | 6,000 | 6,000 |
| Annual maintenance | 3,940 | 5,260 | 6,570 | 7,880 | 9,200 | 10,510 |
| Annual fuel use | 30,220 | 40,300 | 50,370 | 60,440 | 70,520 | 80,590 |
| Annual fuel cost ($0.40/l) | 12,090 | 16,120 | 20,150 | 24,180 | 28,210 | 32,240 |
| Present value of costs | | | | | | |
| Installation | 50,000 | 50,000 | 50,000 | 50,000 | 50,000 | 50,000 |
| Replacement[b] | 19,300 | 19,300 | 19,300 | 19,300 | 19,300 | 19,300 |
| Operation and maintenance | 84,600 | 95,830 | 106,980 | 118,130 | 129,360 | 140,510 |
| Fuel | 102,890 | 137,190 | 171,490 | 205,790 | 240,090 | 274,380 |
| Total present value[c] | 256,790 | 302,320 | 347,770 | 393,220 | 438,750 | 484,190 |

[a]Load for the electric pumps is 51,470 kWh or about 11%.
[b]Plant replaced after 10 years.
[c]Based on a discount rate of 10% and evaluation period of 20 years.

Table 14. Cost of multipurpose minigrid[a] - Okavango Delta Region.

| Grid length (km) | 2 | 4 | 6 | 8 |
|---|---|---|---|---|
| Distribution | 17,000 | 34,000 | 51,000 | 68,000 |
| Annual maintenance[b] | 3,400 | 6,800 | 10,200 | 13,600 |
| Transformation[c] | 16,000 | 16,000 | 16,000 | 16,000 |
| Feeder cables (2 km) | 4,000 | 4,000 | 4,000 | 4,000 |
| Total | 40,400 | 60,800 | 81,200 | 101,600 |

[a]Sources: Derived from A. D. Little (undated) and NRECA (1983).
[b]Present value of maintenance is $200/0.1175 per km.
[c]Includes two transformation units.



39

Table 15. Cost of electricity supplied to the minigrid - Okavango Delta Region.

| Grid length (km) | 2 | 4 | 6 | 8 |
|---|---|---|---|---|
| Load factor = 15% | | | | |
| Generation plant[a] | 256,790 | 256,790 | 256,790 | 256,790 |
| Minigrid[b] | 40,400 | 60,800 | 81,200 | 101,600 |
| Total present value | 297,190 | 317,540 | 337,990 | 358,390 |
| Levelized annual cost | 34,920 | 37,320 | 39,710 | 42,110 |
| Power cost ($/kWh) | 0.532 | 0.568 | 0.604 | 0.641 |
| Load factor = 20% | | | | |
| Generation plant | 302,320 | 302,320 | 302,320 | 302,320 |
| Minigrid | 40,400 | 60,800 | 81,200 | 101,600 |
| Total present value | 342,720 | 363,120 | 383,520 | 403,920 |
| Levelized annual cost | 40,270 | 42,670 | 45,060 | 47,460 |
| Power cost ($/kWh) | 0.460 | 0.487 | 0.514 | 0.542 |
| Load factor = 25% | | | | |
| Generation plant | 347,770 | 347,770 | 347,770 | 347,770 |
| Minigrid | 40,400 | 60,800 | 81,200 | 101,600 |
| Total present value | 388,170 | 408,570 | 428,970 | 449,370 |
| Levelized annual cost | 45,610 | 48,010 | 50,400 | 52,800 |
| Power cost ($/kWh) | 0.417 | 0.438 | 0.460 | 0.482 |
| Load factor = 30% | | | | |
| Generation plant | 393,220 | 393,220 | 393,220 | 393,220 |
| Minigrid | 40,400 | 60,800 | 81,200 | 101,600 |
| Total present value | 433,620 | 454,020 | 474,420 | 494,820 |
| Levelized annual cost | 50,950 | 53,350 | 55,740 | 58,140 |
| Power cost ($/kWh) | 0.388 | 0.406 | 0.424 | 0.442 |
| Load factor = 35% | | | | |
| Generation plant | 438,750 | 438,750 | 438,750 | 438,750 |
| Minigrid | 40,400 | 60,800 | 81,200 | 101,600 |
| Total present value | 479,150 | 499,550 | 519,950 | 540,350 |
| Levelized annual cost | 56,300 | 58,700 | 61,100 | 63,490 |
| Power cost ($/kWh) | 0.367 | 0.383 | 0.399 | 0.414 |



39

Table 15. Cost of electricity supplied to the minigrid - Okavango Delta Region. (Continued)

| Grid length (km) | 2 | 4 | 6 | 8 |
|---|---|---|---|---|
| Load factor = 40% | | | | |
| Generation plant | 484,190 | 484,190 | 484,190 | 484,190 |
| Minigrid | 40,400 | 60,800 | 81,200 | 101,600 |
| Total present value | 524,590 | 544,990 | 565,390 | 585,790 |
| Levelized annual cost | 61,640 | 64,040 | 66,430 | 68,830 |
| Power cost ($/kWh) | 0.352 | 0.366 | 0.379 | 0.393 |

[a]From Table 13.
[b]From Table 14.

Table 16. Cost of water with centralized minigrid - Okavango Delta Region.

| Grid length (km). | 2 | 4 | 6 | 8 |
|---|---|---|---|---|
| Installed motor/pump cost | 24,000 | 24,000 | 24,000 | 24,000 |
| Present value of replacements[a] | 7,720 | 7,720 | 7,720 | 7,720 |
| Present value of annual maintenance | 12,770 | 12,770 | 12,770 | 12,700 |
| Total present value | 44,490 | 44,490 | 44,490 | 44,490 |
| Levelized annual cost | 5,230 | 5,230 | 5,230 | 5,230 |
| Annual cost of power[a] | | | | |
| Load factor = 15% | 27,380 | 29,230 | 31,090 | 32,990 |
| Load factor = 20% | 23,680 | 25,070 | 26,460 | 27,900 |
| Load factor = 25% | 21,460 | 22,540 | 23,680 | 24,810 |
| Load factor = 30% | 19,970 | 20,900 | 21,820 | 22,750 |
| Load factor = 35% | 18,890 | 19,710 | 20,540 | 21,310 |
| Load factor = 40% | 18,120 | 18,840 | 19,510 | 20,230 |
| Annual cost of water | | | | |
| Load factor = 15% ($/ha) | 408 | 431 | 454 | 478 |
| ($/m$^3$) | 0.0226 | 0.0239 | 0.0252 | 0.0265 |
| Load factor = 20% ($/ha) | 361 | 379 | 396 | 414 |
| ($/1m$^3$) | 0.0201 | 0.0210 | 0.0220 | 0.0230 |
| Load factor = 25% ($/ha) | 334 | 347 | 361 | 375 |
| ($/m$^3$) | 0.0185 | 0.0193 | 0.0201 | 0.0209 |
| Load factor = 30% ($/ha) | 315 | 327 | 338 | 350 |
| ($/m$^3$) | 0.0175 | 0.0181 | 0.0188 | 0.0194 |
| Load factor = 35% ($/ha) | 301 | 312 | 322 | 332 |
| ($/m$^3$) | 0.0167 | 0.0173 | 0.0179 | 0.0184 |
| Load factor = 40% ($/ha) | 292 | 301 | 309 | 318 |
| ($/m$^3$) | 0.0162 | 0.0167 | 0.0172 | 0.0177 |

[a]Pumps replaced after 10 years ($1,000/pump * 0.386 * 20).
[b]Based on 51,470 kWh.

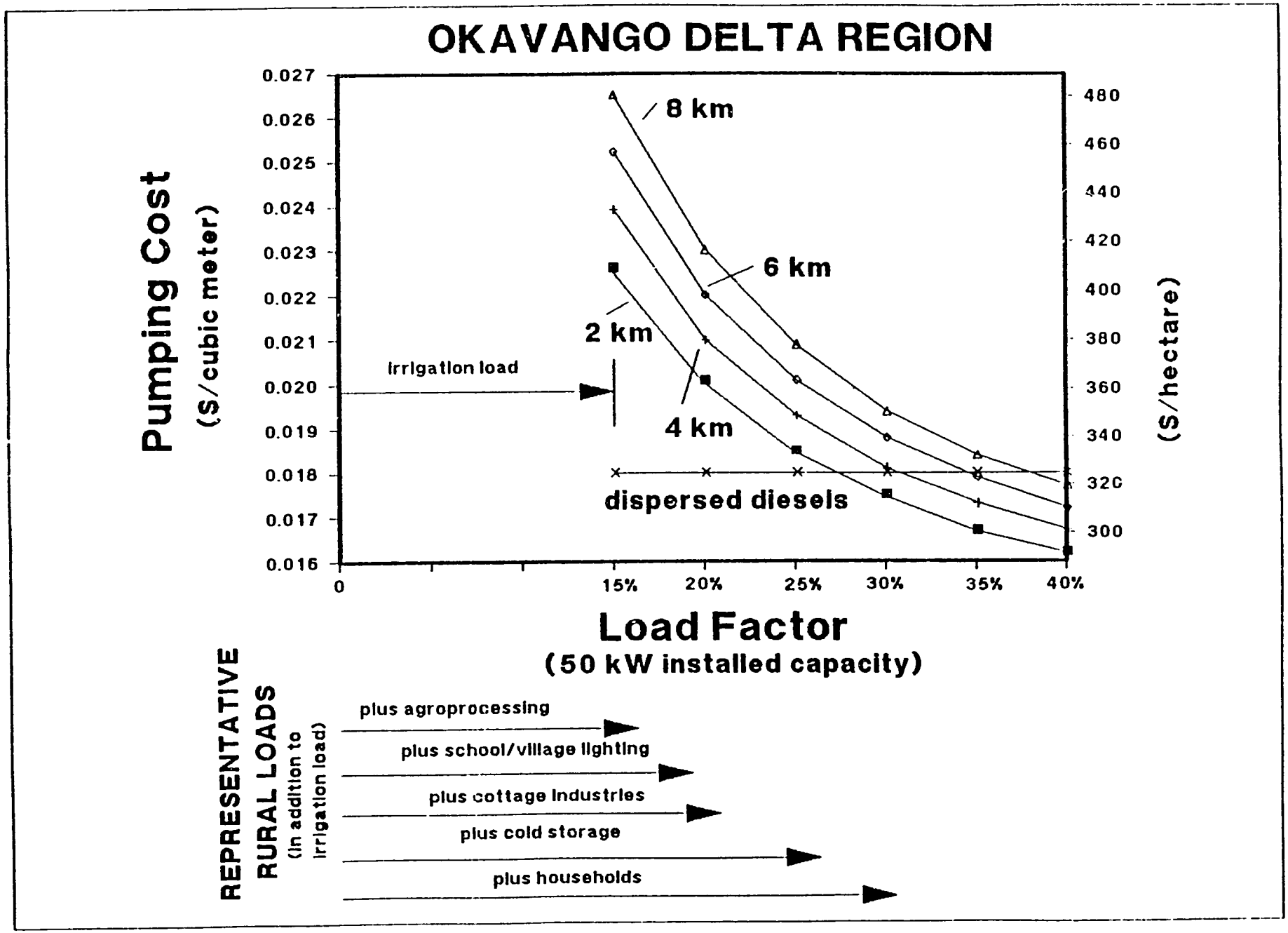


Fig. 8. Water pumping costs under multipurpose minigrid and dispersed diesel pumpsets - Okavango Delta Region



42

7 Senegal River Valley example were not very sensitive to increases in grid length. For the Okavango Delta example grid length, and perhaps for smaller capacity systems, longer grid lengths increased water costs.

Although the both of these examples must be considered somewhat hypothetical, the exercise demonstrates that electric pumps are indeed competitive. Questions of central operation and fuel storage, concentrating competent mechanics at a single site, longer pump maintenance intervals, simpler and unattended operation, and most importantly, the provision of power for other rural needs are advantages that were not specifically addressed in this paper, but greatly favors the choice of a minigrid. In many sparsely populated rural locations central grid extension is uneconomic because of low capacity factors. A minigrid with a guaranteed load of irrigation pumping is one option for providing power for rural development.

## REFERENCES


1. A. D. Little Inc., undated. Barriers to Expanding Irrigated Agriculture in Subsahara Africa. prepared for the Office of Energy, Bureau of Science and Technology. U.S. Agency for International Development. Washington.

2. Brito, J., 1982. Etude Pedologique du Casier de Kobilo (Departement de Matam, Region du Fleuve, Senegal). Office de la Recherche Scientifique et Technique Outre-Mer. Centre de Dakar-Hann. 117p w/charts and annexes.

3. Doorenbos, J., and W. O. Pruitt, 1984. Crop Water Requirements. FAO Irrigation and Drainage Paper #24. Food and Agriculture Organization of the United Nations. Rome. 144 p.

4. Hargreaves, G. L., G. H. Hargreaves and J. P. Riley, 1985. Irrigation Water Requirements for Senegal River Basin. Am. Soc Civil Engrs. J. Irrig. and Drain. Div. 111(3):265-275.

5. NRECA (National Rural Electric Cooperative Association), 1983. Small Hydropower in Africa. Workshop Proceedings. Mbabane, Swaziland. International Programs Division. NRECA. Washington.

6. Penman, H. L., 1948, Natural Evaporation from Open Water, Bare Soil and Grass. Royal Soc., London Proc., Ser. A., 193:120-146.

7. Samuels, G., et al., 1987. Small Water Pumping Systems: Evaluative Procedures. Energy Division. Oak Ridge National Laboratory. Oak Ridge, Tennessee.

8. Schevenius, J. 1987. Personal Communication.




44

## APPENDIX

### Levelized Annual Cost Procedures

The costs of alternative irrigation pumping systems are compared using levelized annual costs (LAC). The LAC accounts for the installed (or capital) cost of the pumping system as well as for the annual costs associated with operation, maintenance, and fuel, and other costs associated with repairs and replacement over the assumed life of the project.

The capital cost of the pumping system gives rise to two types of costs -- investment recovery and interest. The present value of the investment recovery and interest is simply the original capital or installed costs of the equipment minus the present value of any equipment salvage at the end of the project analysis period. The levelized annual cost is found by converting the present value of the investment recovery and interest to an equivalent series of equal end-of-period payments using the capital recovery factor (CRF).

The CRF is used to convert the present value of equipment replacements (e.g., pumps costs) to a levelized annual cost. However, replacement costs must first be converted to present value terms before using the CRF. The levelized annual cost of recurring costs of maintenance and fuel is simply the present annual cost.

The present value of the initial investment:

$$PV(I) = I - (1+i)^{-n}[S_n]$$

The LAC of the investment:

$$LAC(I) = PV(I) \left[ \frac{i(1 + i)^n}{(1 + i)^n - 1} \right]$$

The present value of future costs of replacements:

$$PV(R) = (1+i)^{-n}[R]$$

# IMPROVED WATER PUMPING/WATER LIFTING IN AFRICA

## RAPID COUNTRY REVIEW

BOTSWANA

DRAFT

Power

Ref:

APRIL 1987

# PREFACE

The work reported here was carried out by Jeff Kenna of I.T.Power Inc. during the period March 29th to April 4th 1987. The aim of the work, which was funded by the United States Agency for International Development, was to prepare a brief profile of the extent and type of water pumping undertaken in Botswana. The data given here has been provided by the persons listed in Appendix I and is referenced appropriately. Their assistance is gratefully acknowledged.

CONTENTS

1. Introduction

2. The Water Resource

3. Water demand and pumping requirements

   3.1 Present
   3.2 Projected

4. Energy requirements for water pumping

   4.1 Present
   4.2 Projected

5. Institutions and Companies Involved in Water Pumping

   5.1 Goverment
   5.2 Private
   5.3 R&D
   5.4 Donors

6. In-country manufacturing and servicing

   6.1 Manufacturing
   6.2 Servicing

7. Field Testing

   7.1 Comparative Water Pumping
   7.2 RIIC
   7.3 BTC

8. Conclusions

References

Appendix 1. List of people contacted.

## 1. INTRODUCTION

There is a limited amount of information available on the reliability and cost effectiveness of water pumping/water lifting (WP/WL) systems. In order to fill this information gap several activities are being carried out under the joint direction of AID's Bureau for Africa Office, Special Programs Division (AFR/TR/SDP), the Regional Economic Development Support Office for East and Southern Africa (REDSO/ESA) and the Science and Technology Bureau, Office of Energy (S&T/EY).

One of the priority tasks which has been identified is a review of the WP/WL problems and issues in selected countries. Rapid country reviews have been carried out in Niger, Mali, Chad, Sudan, Somalia and Botswana.

The objectives of the Botswana Rapid Country Review are to:

- o assess the extent and type of pumping undertaken, including pump quantities and estimates of projected markets
- o assess the reliability and status of information on the potential for pumped water development
- o estimate the present and projected energy requirements for water pumping
- o assess the in-country manufacturing and servicing capability and training requirements
- o describe on-going, planned or completed field trials of power systems and summarize their status

## 2. THE WATER RESOURCE

Botswana has a semi arid climate with average annual rainfall ranging from 650 mm in the north east to less than 250 mm in the south-west. The country is drought prone and is juct recovering from the effects of a severe drought.

There is little surface water available; this being found in the sparcely populated Chobe and Okavango areas - see Figure 2.1. The Limpopo river system on the Botswana/South Africa border also provides seasonal surface water and near-surface water from the sand rivers. Much of Botswana's irrigation is in this area.

Eighty-three percent of the population of 1.1 million people live in the north-east/south-east axis from Francistown to Lobatse. Here water is supplied by a system of boreholes and dams. The water rest level in this area ranges from 20 m to 60 m.

# GENERAL SITUATION MAP

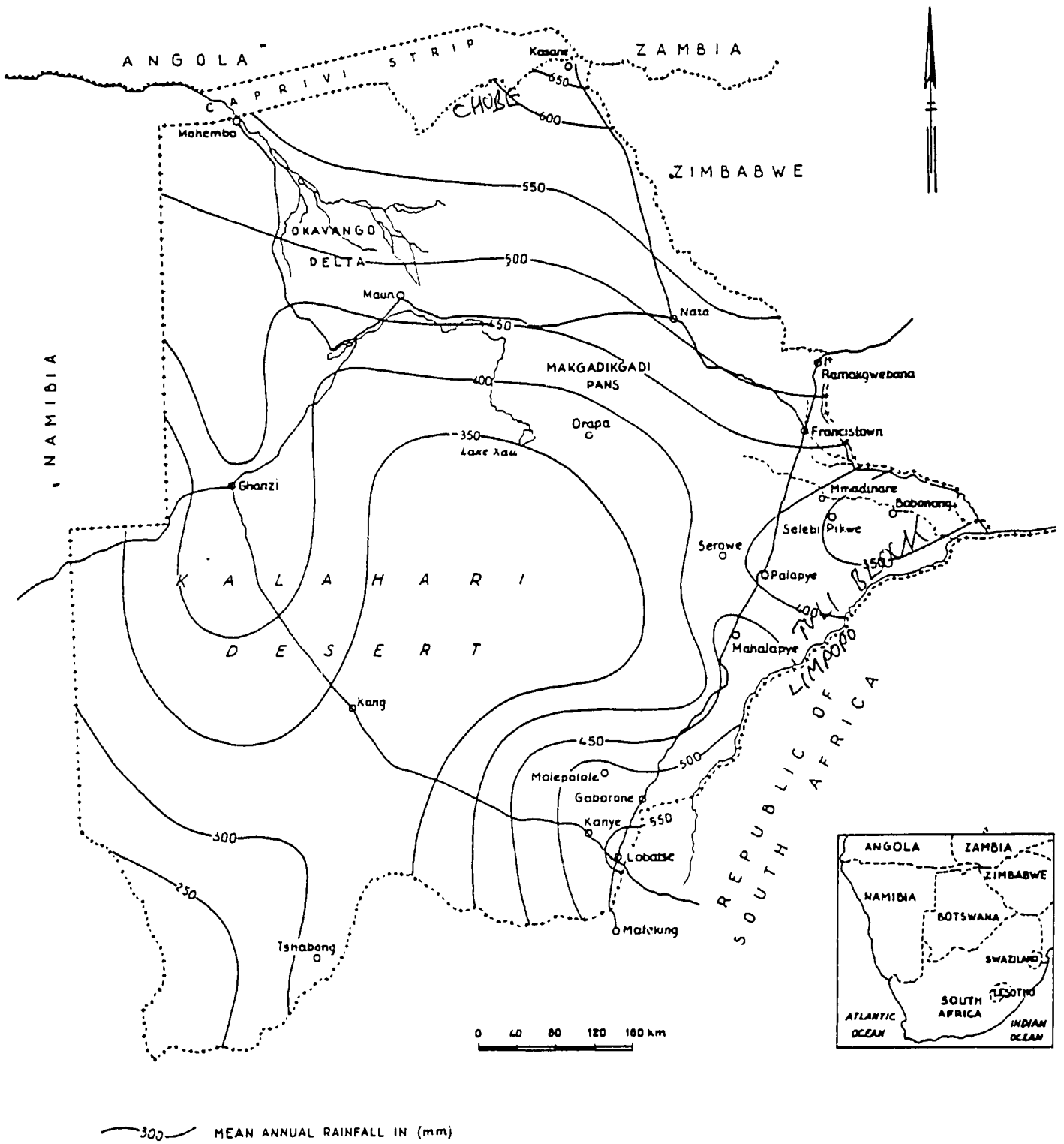


FIG. 2.1

In the remainder of the country water is provided from boreholes from depths ranging from 20 m in the east and north to 120 m in the west.

There are approximately 11000 registered boreholes in the country, of which half are in use. he remainder are disused either because the water is too saline or because the output is too low.

Table 2.1 sumarizes the annual water resource. The present annual water consumption is 110-120 million cubic metres per year.

| | Annual resource (millions of cubic metres) | Reference |
|---|---|---|
| 1. Surface water | | |
| Chobe | 1000 | 4 |
| Okavango (inflow) | 11000 | 4 |
| Okavango (outflow) | 300 | 4 |
| Limpopo | 950 | 3 |
| 2. Groundwater | 4000 | 1 |

Table 2.1 Water Resources in Botswana

## 3. WATER DEMAND AND PUMPING REQUIREMENTS

### 3.1 Present

The main uses of water in Botswana are:

- livestock
- irrigation
- urban use
- mining
- rural village supply

Livestock

This is by far the greatest demand for water in Botswana due to the hight livestock population as shown in Table 3.1.

There is very little information available on livestock water consumption but since typical cattle requirements are 40-50 litres per day the total annual livestock water consumption has been estimated to be 46 million cubic meters (1) from 4500-5000 boreholes (2). These are largely privately owned.

| Animal | Farming method | Population 1000 |
|---|---|---|
| Cattle | Commercial | 379 |
| | Traditional | 2306 |
| Sheep | Commercial | 23 |
| | Traditional | 148 |
| Goats | Commercial | 25 |
| | Traditional | 865 |
| Total | | 3573 |

Table 3.1 Livestock population 1984 (Ref 1)

Irrigation

There are up to 2000 ha of irrigated agriculture much of it commercial (5). The irrigation unit at the Ministry of Agriculture has estimated that there are 200 irrigated farms; of these 25 are over 50 ha and the remainder in the range 1-5 ha. The total water requirement for irrigation is approximately 15,000 cubic metres per hectare per year (5), giving a total annual requirement of 30 million cubic metres.

Urban and Mining

The National Development Plan (1) states that urban and mining requirements are 24 million cubic metres per year.

Rural Villages

Rural water supplies are divided into 2 components:

- the 17 largest villages with an annual consumption of 5 million cubic meters.
- the remaining 400 smaller villages with pumped supplies with an annual consumption of 5 million cubic meters.

Pump types

Table 3.2 summarizes the present water demand.

| Sector | Demand million cubic metres per year | Percentage of total |
|---|---|---|
| Livestock | 46 | 41% |
| Irrigation | 30 | 27% |
| Rural villages | 10 | 9% |
| Urban | 9 | 8% |

| | | |
|---|---|---|
| Mining | 16 | 14% |

Table 3.2 Summary of Present Water Demand in Botswana

Practically all the water has to be pumped because even where there are dams for urban supplies, water must be pressurized.

At present the most favored pump type is the mono pump coupled to a Lister diesel engine. Approximately seventy-five per-cent of the pumps installed in the last five years are of this type. Many of the livestock pumps are older and use a reciprocating pump (50% estimated to be manufactured by National) coupled to a Lister 6/1 or 8/1 engine. The mono pump is favored because:

- o it is resistant to the 'sandy' water, generally reliable and long lasting
- o its efficiency does not change with changes in head

Although by far the majority of pumps are diesel powered, there are a number of alternatives in use. There are an unknown number of Climax and Stewarts and Lloyds windpumps (especially in the Ghansi region) used for livestock wateringand 15 windpumps under the comparative water pumping project (see section 7). There are14 locally produced Motswedi windpumps either installed or on order (see section 5).

There are 13 solar photovoltaic pumps; 8 of these use the mono pump and the remainder use electric submersibles.

The Rural Industries Innovation Centre has installed 6 biogas pumps and 4 animal driven pumps (ADP's) in Botswana.

3.2 Projected

The Energy Master Plan has projected water demand to the year 2010. The projections for 1990 are shown in Table 3.3. These are based on the following assumptions:

- o urban water demand increases by 5% p.a. to 1990
- o water demand in the major rural villages increases by 8% per annum to 1990
- o water demand in other rural villages increases by 5% per annum.
- o the irrigated area in the country increases to 6000 ha
- o there is no change in the livestock water requirement since the population is projected to remain static.

Comaparison with Table 3.2 shows that there is a significant change, with the largest component becoming irrigation.

| Sector | Water demand (millions of cubic metres per year) | Percentage of total |
|---|---|---|
| Irrigation | 90 | 57% |
| Livestock | 45 | 28% |
| Urban | 11 | 7% |
| Major villages | 7 | 4% |
| Other villages | 6 | 4% |
| TOTAL | 179 | 100% |

Table 3.3 Projected Water Demand in Botswana - 1990 (2)
N.B. The Mining Sector is not included

## 4. ENERGY REQUIREMENTS FOR WATER PUMPING

### 4.1 Present

The urban, mining and approximately 10 of the pumping sites in the major villages are powered by grid electricity. The remainder are powered by small stand-alone diesel engines apart from the solar, windpumps and ADP's mentioned in section 3.1. Hence the main fuel source for pumping is diesel.

Table 4.1 sumarizes the energy requirement by sector. These are based on the following assumptions:

- o diesel consumption at cattle posts is 1000 litre/year on average (2).
- o Typical pumped head for irrigation is 50 m; the pumps operate at an average efficiency of 15%.
- o urban energy requirements are given in the Energy Master Plan (2).
- o Typical pumped head in the rural villages is 100 m; the pumps operate at an average efficiency of 15%.

| Sector | Electricity Consumption (MWh/yr) | Diesel Fuel Consumption (millions of litres/yr) | Percentage of total |
|---|---|---|---|
| Livestock | | 5 | 45% |
| Irrigation | | 3 | 27% |
| Urban | 12,300 | | 11% |
| Major villages | 900 | 0.8 | 8% |
| Other villages | | 0.9 | 8% |
| TOTAL | 13,100 | 9.7 | 100% |

Table 4.1 Present Energy Requirements for Water Pumping

### 4.2 Projected

Using the assumption in section 4.1, the energy requirements for water pumping in 1990 - see Table 3.3 - are given in Table 4.2.

| [illegible] | Electric Consumption (MWh/yr) | Diesel Fuel Consumption (millions of litres/yr) | Percentage of total |
|---|---|---|---|
| Irrigation | | 9 | 50% |
| Livestock | | 5 | 28% |
| Urban | 15,200 | | 9% |
| Major villages | 1,300 | 1.1 | 7% |
| Other villages | | 1.1 | 6% |
| TOTAL | 17,100 | 16.2 | 100% |

Henc there is a significant (67%) increase in the energy requirements and this is largely required for irrigation.

## 5. INSTITUTIONS AND COMPANIES INVOLVED WITH WATER PUMPING

### 5.1 Government

Water resources policy in Botswana is the responsibility of the Ministry of Mineral Resources and Water Affairs. Within the Ministry, the Department of Water Affairs (DWA) has responsibilty for water supply outside the six main urban/mining areas and for overall water resources planning. There is also an Energy Unit which examines possibilities for energy substitution and is working on an Energy Master Plan for Botswana.

Responsibility for urban and rural village water supplies is undertaken by the government and can be sumarised as follows;

- Urban water supplies are covered by the Water Utilities Corporation which is a parastatal. Water is sold at cost.
- Water supply to the 17 major villages is the responsibility of the Department of Water Affairs
- Water supply to the other villages is the responsibilty of the District Councils and hence Ministry of Local Government and Lands. In these villages the Department of Water Affairs installs the pumps, but maintenance and repair is the responsibility of the District Councils.

The DWA has its own training school and operates a subsidised Borehole Repair Service (BRS) for both the government and private sectors. BRS has 30 depots covering a 250 km radius each. The service charges a set fee of P80 plus parts at cost for the repair service.

The Ministry of Agriculture offers support to the livestock and irrigation sectors, athough these sectos are privately owned. Within the Ministry of Agriculture there is an Irrigation Division and an Animal Production Unit both involved with water pumping.

The major projects underway in the government sector at present are:

Rural Villages Program - supported by SIDA and operated by the Ministry of Local Government and Lands and the DWA. The objective of this program is to provide reticulated water supplies to the 354 larger villages (this includes the 17 major villages). At present there are only 70 villages left and these will be completed at a rate of 20-25 per year. This program covers 95% of the population.

Services to Livestock Owners in Communal Areas (SLOCA). A component of this project, which is assisted by the EEC, is to install 20 different types of livestock water pumps. The M o A is working with RIIC to install locally produced pumps.

Drought Relief Program (EEC)

5.3 Private Sector

The majority of pumping in Botswana (i.e. livestock and irrigation) is covered by the private sector. There is a small but strong service sector. The number of companies involved in specification, installation and servicing of pumps as shown in Table 5.1

| Town | No. of Private Companies |
|---|---|
| Gabarone | 3 |
| Francistown | 2 |
| Maun | 1 |
| Mahalapye | 1 |

Table 5.1 Distibution of Private Companies involved in Water Pumping

5.3 Institutions involved in R&D.

Two non-profit organisation are involved in water pumping; the Botswana Technology Centre (BTC) in Gabarone and the Rural Industries Innovation Centre (RIIC) in Kanye.

BTC offers a technical information service, has undertaken tests on solar pumps and produces reports on pumping technologies. One of BTC's current projects is the preparation of a manual for users on the use of diesel pumps.

RIIC's main work on pumping is the development of 3 technologies suitable for local manufacture:

- The Motswedi windpump which has a rotary drive and powers a mono pump

- o The animal driven pump (ADP) designed to be operated by horses, oxen, mules or donkeys, again driving a mono pump.

- o The Thebe handpump

RIIC's policy is to pass on manufacture of its products to local companies once they have been developed. This has occured sucessfully with a sorghum dehuller. A company has been identified to produce the Motswedi windpump. However technology transfer is difficult because the manufacturing base is not well advanced and the market is small.

5.4 Donors

The three main donors involved with water pumping are SIDA, EEC and USAID.

SIDA has been involved in water pumping in Botswana for 16 years and has a long term committment to water supplies in Botswana. SIDA is supporting the Rural Water Supplies Program, giving operational and maintenance support to District Councils and also has a Health and Hygiene Program through the Ministry of Health.

The EEC is funding the Drought Relief Program.

USAID's involvement is with the Comparative Water Pumping Project (see section 7).

## 6. IN-COUNTRY MANUFACTURING AND SERVICING

6.1 Manufacturing

Apart from RIIC's work on wind, animal and handpumps (see section 5.3) there is no local manufacture of pumps in Botswana.

6.2 Servicing

This is covered by the Borehole Repair Service (BRS) at the Department of Water Affairs and the 6 private companies shown in Table 5.1. There is also a large but unquantified informal serviceing sector.

## 7. FIELD TESTING

The major field testing program in Botswana is Comparative Water Pumping Project funded by USAID through the Energy Unit of the Ministry of Mineral Resoures and Water Affairs. BTC and RIIC are also involved to a lesser extent.

7.1 Comparative Water Pumping

Under this project 15 windpumps, 12 solar pumps and 10 diesel pumps have been extensively monitored. Short term tests have been carried out on 14 handpumps and animal pumps. A survey of costs and reliability of 100 diesel pumps has also been undertaken. The end result of the project is to recommend startegies for government and private sector in small scale pumping. A draft report will be available in June/July.

7.2 RIIC

RIIC have a windpump test site in Kanye and are monitoring two field windpumps as part of the development of their windpump.

7.3 BTC

BTC have conducted field tests on solar pumps.

## 8. CONCLUSIONS

Water pumping in Botswana is relative success story. There are a number of lessons that can be learned from the experience here:

- o there is a standard product range used for pumping, i.e. principally the moro pump and Lister diesel engine. This simplifies the training aspects, allows a smaller spare parts inventory and simpler design procedures
- o there has been long term objectives set by MMRWA and supported for 18 years by SIDA
- o there is a strong in-country service capability both in the government and private sectors.
- o there is a comparative field testing program, well supported by the Ministry which will yield much useful information on pump choice.
- o there are two local organisations involved in water pumping (RIIC and BTC) with consequent improvement in local skills and capabilities

Given the projected changes in water demand there are a number of areas that require further work, several of which are already receiving attention:

- o the data base on livestock water pumping needs to be strenghened in order to assess thoroughly the situation.
- o since the projected water demand is heavily biased towards irrigation, further efforts need to be paid

to irrigation pumping

- given that the biggest end-use is in the private sector, end-users need to be educated on what is available and the limitations of equipment. This is particularily relevant to diesel engines which are often mis-matched with consequent increases in O&M costs.

- given that pumping in Botswana is almost entirely diesel powered, there needs to be some diversification of power source to mains electricity, solar, wind, hand etc.

References

1. Repblic of Botswana National Developmen Plan. 1985-1991 December 1985. Ministry of Finanace and Planning.

2. Energy Master Plan for Botswana, Interim report Volume 2. Ministry of Mineral Resources and Water Affairs

3. Limpopo Water utilisation Study. M McDonald and Partners Feb 1987

4. Botswana Small Dams Construction. VIAK for UNCDF, June 1985

5. Study on Options and Investment Priorities in Irrigation Development Phase 2. Euroconsult, Gabarone April 1986

Appendix 1. List of persons contacted.

Ministry of Minerals Resources and Water Affairs

- Mr D.Kingston, Deput, Director, Water Affairs
- Mr F.Motlhatledi, Senior Energy Officer, Energy unit
- Dr T.Kausel, Principal Planning Officer
- Mr Ngidi, Senior Planning Officer
- Mr J.Hodgkin, Comparative Water Pumping

Ministry of Agriculture

- Mr K.Fernando, ex-head, Irrigation Division
- Mr R.Gulapane, head, Small Dams Section
- Mr J.Larsen, head, Planning Unit
- Mr M.Jetten, Senior Technical Officer, Small Dams Section
- Mr J.Mosiwanye, Animal Production Unit
- Mr H.Mokobo, Animal Production Unit

Ministry of Local Government

- Mr C.Lindblom

Agricon (PTY) Ltd

- Mr T.Rennie, Director

Construction and Water Services

- Mr D.Walker, Director

Botswana Development Corporation

- Mr A.Sons, Chief Irrigation Engineer

Rural Industries Promotions Ltd

- Mr G.Inger, Managing Director

Rural Industries Innovations Centre

- Mr K.Morel, General Manager
- Mr A.Swain, BESO Consultant
- Mr A.Rigby, Installation Manager

Botswana Technology Centre

- Mr B.Aarse, Managing Director
- Mr G.Jacobs

SIDA

- Mr A.Johnson

DDA

- Mr P.Jenkins

EEO

- Mr De Jong

# COMPARATIVE WATER PUMP PROGRAM (CWPP) IN BOTSWANA

Tentative Conclusions and Lessons Learned

April 8, 1987

Jonathan Hodgkin, Rick McGowan, Ron White
Associates in Rural Development, Inc.

Associates in Rural Development (ARD) has been carrying out a comparative water pump testing and evaluation program in Botswana for the last four years. The first two and a half years were under the auspices of the USAID-funded Botswana Renewable Energy Technology Project, and the last year and a half have been under the Health Division of USAID's Bureau of Science and Technology (S+T) as part of the Water and Sanitation for Health (WASH) Project. The CWPP in Botswana has operated under the Ministry of Mineral Resources and Water Affairs (MMRWA), under the capable guidance of Mr. Freddie Motlhatlhedi, whose support and that of MMRWA has been crucial to the success of this project.

We would also like to recognize and thank our local technical staff, including Lucas Motsisi, Modise Motshoge and Peter Modimoofile. Our installation and maintenance crew of 10 Batswana led by Kebarang Goitsemang has significantly assisted in the successful implementation of the project.

## Introduction

### CWPP - Phase One

Based on an increased awareness of the worsening energy crisis in Africa, USAID in the late 1970's began a series of renewable energy technology (RET) projects in Africa. One of these was the Botswana Renewable Energy Technology Project, or BRET. In 1982, a review of many of the Africa RET projects (including BRET) pointed out, among other things, that renewable energy-based pumping systems had highly variable success in Africa, and that there was little hard data to explain the reasons behind either successes or failures.

ARD, the contractor for the BRET project, suggested that a water pump testing and evaluation component would be a natural extension of its RET R&D activities in Botswana. At the USAID mission's request, ARD technical staff began the implementation of the pump testing and evaluation program (which later became known as the Comparative Water Pumping Program, or CWPP) by developing a field testing

methodology, while at the same time initating site selection in Botswana.

The goal of the CWPP was to field test a wide variety of pumping technologies to determine the comparative cost and performance under typical operating conditions in rural Botswana. The purpose was two-fold:

- one, to make recommendations to the Government of Botswana on the appropriate site-specific choice of pumping technologies, and;
- secondly, to provide a case study to allow people in other developing countries to make better, more well-informed decisions about pump selection.

Implementation Activities: The BRET phase of the CWPP tested and evaluated a total of 42 pumps, including:

- five diesels
- eleven wind pumps
- five solar photovoltaic (PV) pumps
- 17 hand-driven pumps
- two grid electric pumps
- one animal traction pump
- one biogas pump

The various activities performed at this stage of the project included:

- site selection, procurement and installation of all of the new pumps;
- the development of monitoring instrumentation for the solar and wind pumps (and procedures for using a variety of existing instruments to measure the performance of the remainder of the systems, particularly diesels);
- short-term intensive performance tests at each of the installations;
- limited longer term testing, and;

- o preliminary evaluation of the performance and cost date base, which at that time was relatively limited.

At the conclusion of the BRET project (in September of 1985) the results of the first phase of the pump project were given in a series of ARD/BRET reports. The summary report, Water Pump Field Tests in Botswana (McGowan and Hodgkin, 3/86), dealt with the overall comparative analysis of all of the systems tested. It was included in the packet of materials received by participants at the beginning of this conference. There were also several other reports (available from ARD) which gave in considerable detail the technical performance characteristics for wind, solar and hand-driven pumps. It should be emphasized that the analysis did not focus so much on traditional energy input/output process balances, but rather on collecting the data necessary to determine the relative costs per unit of water pumped, over the estimated lifetime of the different systems.

Since we are currently in the process and completing data analysis and writing the final reports, we will only be giving preliminary qualitative conclusions during this presentation.

CWPP - Phase Two

As the Bret phase of the project drew to a close, it was apparent that there was not sufficient time to complete the work as originally hoped. As a result, the Government of Botswana asked for funding assistance to continue the activity for an additional year and a half. The funding was secured through the S+T/H's WASH Project, with the Government of Botswana making a significant contribution as well. Activities in the new project began in February of 1986.

The expanded time that was then made available for data collection and analysis allowed a fuller examination of:

- o 15 windmills from 6 manufacturers (including Climax, Kijito and the locally made Motswedi);
- o 12 solar pumps from three manufacturers (in 5 configurations);
- o ten Lister diesel pumps;
- o 8 electric pumps (in two configurations - submersible and surface-mounted motors with Mono pumps), and;

- a number of handpumps.

The most important addition to the program was a greatly expanded examination of diesel engine performance and costs. This effort has examined in considerable detail available secondary sources of performance and cost information. This has involved collection of data on repair, maintenance and installation costs, examination of pumper log books and field visits. The information has been collected from the Department of Water Affairs (DWA), the district council maintenance units, the Borehole Repair Service (BRS) and, to the degree possible, from the private sector. The operations and maintenance records of well over 100 diesel systems have been examined. This information was used to develop a consistent picture of the operating, minor repair and overhaul costs for diesel pumping systems in Botswana. This will provide a better understanding of the current costs of diesel pumping that is so necessary when considering the proposed introduction of new technologies.

A major effort was also made during Phase Two to obtain additional O+M data for wind and solar pumps. The original approach was to collect at least one year of data for each of these systems. This has in some cases proved impractical (and in a few cases impossible), but for most of these pumping systems we have collected one year of data. The four types of data collected were:

- monthly integrated values;
- daily values over a month or more;
- short-term performance data (over a solar day or range of windspeeds), and;
- maintenance costs and frequencies.

Since we were not using computer-based data collection systems, but rather units that integrated the measured outputs over a given time period, occasional visits to the site or local assistance were required to collect data. CWPP technical staff made monthly visits to each site to collect the data that allowed the monthly energy inputs and outputs to be calculated. These monthly trips also allowed examination of the pumps to ascertain if they were operating properly. Repairs and maintenance trips sometimes resulted from the data collection visits, and the primary performance data (results of short term intensive tests) was also gathered at that time.

We also arranged with local people living near the sites to collect data on a daily basis at each site over at least one and often several months. In almost all cases, these people did an excellent job. As they had to record

numbers from the data loggers, occasional mistakes were made, but these could usually be easily identified during data analysis.

Considerable time and effort was also spent on short term testing by CWPP technical staff. The purpose of these tests was to characterize the detailed performance of wind and solar pumps as a function of the energy input. This has allowed a much fuller understanding of the longer term results, particularly when the long-term results did not match design expectations. It has served another important purpose as well - performance model verification (see below). Short-term testing was performed on other pumping systems as well, including diesels, handpumps, electric pumps and the animal drawn pump (ADP) discussed by RIIC representatives.

The collection of secondary data has been an important part of the project activities. This was particulary true for diesel systems, but has also been true for wind and solar pumps, as RIIC and BTC have provided valuable data on the systems they have been monitoring and testing. While the collection of diesel data from various sources has been discussed previously, we would like to point out that beyond the data itself, extensive interviews with many mechanics, technicians and pump professionals (including those who have attended the conference) were invaluable in helping create a consistent picture of pump use and costs in Botswana.

It is only possible to test a limited amount of equipment under a limited set of conditions in any field test program. In order to compare systems that operate under similar conditions of head and water delivery, it is necessary to be able to generalize the results somewhat. To do this, we have developed performance models which predict water output using energy inputs (solar radiation and wind regimes), and verified the models with measured performance data. However, it is important not to extrapolate the data too far by assuming that the model gives good results under conditions very different than the testing and verification conditions. The design of these models allows us to predict with a some degree of certainty the performance of a specific pump set under conditions other than the test condition. This is important if comparisons are to be made among similar systems.

Last night we demonstrated the combined technical performance and economic model for diesel pumps. The model takes a series of inputs (water demand, pumping head, distance to fuel depot, etc.) and calculates loading, predicted fuel consumption and expected energy efficiency (fuel to water delivered). The short-term diesel tests were performed in part to verify the diesel fuel consumption figures. Except in cases where air was being pumped (i.e.,

borehole yields were lower than pump capacity), the predicted figures fell within about 5% of measured performance. In one test case, one of the technicians was surprised that a problem at one test site could be diagnosed simply by analyzing the data he brought back from the test. This was obvious from the fact that when a Mono system overpumps the borehole so that it is operating partially dry, loading decreases and fuel consumption goes up.

The wind performance model used was originally developed several years ago by Alan Wyatt and Jonathan Hodgkin. It predicts the output of a windmill starting with first principles. Inputs include rotor size, head, cylinder size, windspeed and so on. The model generates a pump curve and integrates it through a wind regime. The output is the water delivery per unit of time (usually cubic meters per day), the efficiency, the loading and several other parameters. This model has been tested against all of the windmills for which we have sufficient data, and predicts within 10% in all cases. This model has also helped identify problems. For example, at Kgoro, an out-of-round lower check valve was discovered because actual performance did not match the model.

The original solar pump performance model was develped by Rick McGowan, based on the procedure given in the Solar Pumping Handbook (Kenna and Gillett, 1985). The model requires basic system description inputs (such as size of the array, type of pump subsystem, pumping head, etc.) as well as several parameters which have been either measured or estimated (such as solar irradiation over the day, hydraulic efficiency of the pump subsystem, etc.), with which it calculates the water output for the typical solar day for each month of the year.

That original model has since been considerably modified to include temperature derating of module performance, using hourly rather than daily integrated irradiation values, and the incorporation of low radiation cut-in and cut-out levels for periods (normally during the early morning and late afternoon, or during cloudy conditions) when irradiance levels are insufficient for pump operation. These modifications allow more accurate determination of the solar pump daily water output.

## The Economic Model

The economic model that we are using takes the engineering performance data from tests and the performance models described above, incorporates the physical characteristics of the site and then translates them into cost estimates. It gives present value estimates in both

economic and financial terms, and uses the same structure of analysis for each technology to be compared. This means that we can simultaneously examine the details of how a situation looks to a farmer and to a government planner.

In some specific instances, it is more sophisticated than most models that you will find. For example, we do not make some simple assumption such as "operating costs are 5% of installed capital costs." Rather, we base our estimates on an examination of actual engines running here in Botswana and express these costs on a per hour basis. Therefore, any changes you make in the number of hours you run the engine also changes these costs.

Another interesting feature is the fact that we have the ability to build in a percentage growth in water demand, which means that at the end of the 20 year period the engine is running more hours than in the initial period. Those technologies (such as wind or solar pumps) which cannot simply be run longer hours or which are not of a modular design (e.g., windmills) and can be expanded easily, will not fare so well in a situation where demand is growing. We believe it is important that the analytic model realistically represent the real world.

The importance of engine loading in assessing the engineering performance of an engine has been discussed previously. Increased loading has an economic interpretation. If you double the pumping rate of an engine and get the loading up to a reasonable number by putting a larger pump on it and keep the engine speed the same, you decrease running time by one-half, which decreases all the O&M costs which are linked to running time. Fuel use decreases, too, but not by half. We can also vary the personnel costs associated with engine operation - the pumper's salary - and that has a larger affect on costs than you might expect, even in the economic case where it is shadow priced at 50%.

Finally, we have tailored our model to answer some particular questions of interest to the Government of Botswana. We are performing comparative analyses of technologies in particular situations for four user groups:

- major villages;
- rural villages;
- other government installations, and;
- the private sector.

These groups differ from one another in a variety of ways, including the rate of demand growth, in the volume of

water they demand, in their labor costs, and in the capital cost of the equipment they purchase.

Lessons Learned

The following is a series of issues which we fell are important to consider when undertaking a testing and evaluation program such as this one, as well as in interpreting its results.

1. It is very important to present both sides of an issue - Present not only the data that favors a technology but that which is not so favorable. It is important to be analytic, rather than be an advocate of a particular technology. For example, while the reliability of solar pumps is often touted as one of their primary advantages, we have had several failures of PV pumps during this project. This was not due to the photovoltaic power systems themselves, but to inadequate design of the pump motors. Often, such problems are ignored by some analysts who assume incorrectly that the pumps are as reliable and long-lived as the modules themselves.

2. Don't collect too much data. You should specify clearly what you need to know, and what the minimum amount of data is that will support the decisions that you need to make. Avoid doing research and development for equipment vendors. Be careful not to generate more data than you need to prove or disprove your case. For example, if we could get more long-term operation and maintenance data (more useful for economic comparisons), we would gladly give up some of our short-term intensive data (more useful for system design and technical analysis).

3. Compare fully equivalent systems. This means that the level of demand must be clearly specified, and that only those systems which can meet that need should be compared. Example: If demand increases by 5% over the course of a year, a diesel can--up to a point--simply be run more hours per day. With a windmill on the other hand, unless the wind blows 5% harder, you will not get more water, no matter how much you need. You do know statistically how much water to expect from a windmill at a given site. If this is sufficient, then it is appropriate to innclude the windmill in the comparative economic and financial analysis for that site.

4. Needs-driven vs.technology-driven equipment choices - Don't start with a particular technology and try to find a place to put it. Start from the carefully defined needs of the user, and find the appropriate solution for the particular pumping problem. It is inappropriate to evaluate a technology except in terms of how it meets a need. Example: The site is a low-yielding borehole and a head of

30 meters, where the demand is 3 cubic meters per day. If you try to put a diesel on this site, it surely will meet the need--but quite expensively. A hand pump could address that load at a more reasonable cost. Begin the analysis from the defined needs of the user.

5. Difficulty of Implementation - The magnitude of the job we were trying to do was only fully understood after the project began. We installed 17 wind and solar pumps and tested 56 pumps over varying lengths of time in 3 years. This meant that an average of less than 12 days per system was spent for all maintenance, repair and testing, all with a staff and crew of 14. In Botswana, it appears that a council water unit can maintain and service about 30 engines with a staff and crew of about 20. In the future, similar projects in the future should carefully evaluate staffing requirements for such an undertaking.

6. Improvements on existing technologies often are the most cost-effective near-term solution - There seems little doubt that although diesel technology is mature, performance and costs of individual systems can be improved in most cases. It appears reasonable to assume that most diesel systems in Botswana could be made more efficient by proper equipment selection and better loading. If a 10% increase in efficiency could be accomplished nation-wide, the savings would be on the order of $150,000 per year in fuel alone. (consumption currently totals 6 million liters, so that 10% savings is 600,000 liters, or about $150,000 or P 300,000).

7. It is important to not restrict the project scope to examination of simply technical or economic criteria. A clear example of this situation is with donor-supplied equipment, such as water storage tanks. It may appear from a strictly economic perspective to be inappropriate to use (donor-supplied) Lipp water storage tanks (such as that seen on the pump tour). However, from the government's perspective, it often makes good sense. Tied aid is a fact of life in many developing countries, and it must be recognized when making technical and cost decisions. Under these conditions, detailed calculations of optimal storage sizing may be completely inappropriate, even though technically and economically reasonable.

8. Develop local technical and economic evaluation capacity - This is crucial to have any long-term effect in developing nations. While this is commonly acknowledged, it has often gone the way of operation and maintenance programs. While development professionals pay lip service to its importance, development of the local technical support infrastructure often falls by the wayside. For example, DWA currently has several technicians analyzing data for every engine in use. They are calculating fuel consumption per hour, fuel consumption per cubic meter of

water delivered, and average pump output per hour. At one particular site, it was obvious from a casual perusal of the recorded data that the pump was pumping air. Until CWPP staff noticed this problem, it remained unresolved. This kind of problem can be easily picked up by training the technicians who normally compile the data.

9. Accurate and detailed record keeping - This should be encouraged from the beginning. Incomplete records are often worse than no records at all, as they can be misleading. The best way to insure the accuracy of the recorded data is to promptly perform analysis of the data soon after collection. If problems are spotted, they can be quickly corrected so that subsequent data recording yields useful information.

10. Work within existing institutions - if advances in pump performance are to be had, if cost reduction strategies are to be properly implemented, and if alternatives to diesel are to be considered, then these efforts must be supported by the government agency with direct responsibility. For example, many government employee promotions are contingent upon completion of certain technical training courses. Within the public sector, training must be integrated in such a way that all training courses are accepted as qualification for job advancement, and the training courses must be continued locally after completion of donor-funded projects, otherwise they will be of little use to government employees.

11. Choose equipment with a well-established record of performance and reliability, and try to avoid prototypes. This caveat is in accordance with the suggestion of using only locally-supported products. An example of not following this caveat was the use of Jacuzzi pumps, which was sold as a production unit. Our experience here suggests that it was not. Of a total of 6 of these units installed at three different sites, the aggregated total operating time for all six units was less than four years (or about 8 months each). In addition, measured performance was significantly below manufacturer's specifications, and the regional supplier was not able to provide maintenance and repair assistance.

12. Be careful about instrument choices. Consider precisely what information you need to know before chosing sophisticated instrumentation. We did not use fully automatic data loggers on this project, and while there have been problems, we did assemble quite a large performance data base. Manually-read instuments require that someone visit the site, so that problems can be spotted before thay cause serious damage. Of course, the disadvantage is that people are fallible and occasionally make mistakes. On the other hand, fully automatic data logging systems can collect

considerably more data (often more than can easily be managed) and analyze it on-site. Their disadvantage is that such equipment often does not easily survive the harsh operating conditions frequently encountered here - dust, blowing sand, winds, high operating temperatures - and repair is often neither particularly straightforward nor locally available. Useful information can often be quickly collected with simple instruments.

13. Limits of any general methodogy - General methodologies should not be blindly applied to all situations. Example: In our original methodology developed for testing solar pumps, we wanted to measure the electrical energy input/output for the determination of component efficiencies. Because of difficulties with the kilowatt-hour (energy) meters used, much of this data was not collected. However, by viewing the solar pump simply as a black box with solar radiation input and water output, long-term performance can be adequately estimated simply by knowing the relationship between those two variables. The additional information on the component efficiencies simply allows people to better understand what's going on in the black box. This typifies a more practical approach which addresses the very real constraints typically encountered in field testing. Methodologies used in a testing program should reflect program- and site-specific constraints, including difficulty in getting sophisticated equipment locally repaired, level of available technical skills, distance between sites, limits on the number of personnel, etc.

14. Site-specific system design - Persons not familiar with the the practical limitations of pump performance and costs frequently request sweeping generalizations concerning the cost-effective applications of a particular type of system. Demand profiles and water resource characteristics often vary considerably from site to site, making sweeping generalizations difficult to justify. Example: It is difficult to give general recommendations about the use of wind pumps on any country-wide basis. It is necessary to specify the site-specific conditions of local wind distribution, borehole yield and water depth, in addition to the site demand profile, to determine the potential usefulness of a windpump at any particular site in Botswana.

15. Component replacement times in recurrent cost estimation - Example: We completely agree with Dan Jenkins' comments about how the systems he worked with in West Africa looked very cost-effective at the end of the five-year project, before maintenance became much of an issue. This also applies to several of the renewable technologies in our program, particularly the solar and windpumps. In the case of solar PV pumps (while the Jacuzzi pumps experienced unacceptably early failures and were

replaced), it is yet uncertain what the lifetime of the Grundfos pumps which replaced them will be. We can therefore only estimate their replacement life based on what are, strictly speaking, extrapolations from insufficient data. Our tests thus far indicate that manufacturers tend to consistently underestimate component replacement times.

16. Importance of field testing versus lab testing for performance data - Field tests provide operational, maintenance and repair data that often cannot be extrapolated from laboratory performance tests. Example: The extent to which PV module breakage due to vandalism affects the long-term recurrent costs of PV systems would not have surfaced in lab tests at all. As it is, vandalism (which is highly site dependent) appears to be a major recurrent cost component for photovoltaics at some sites, but it has seldom been included in most (if not all) cost analysis to date.

17. Avoid extrapolation of testing results to other developing countries without considering differences in their respective situations - Example: Because of the well-established and relatively successful diesel pump maintenance and repair infrastructure in Botswana, the recurrent costs of diesel pumping are lower here than is likely to be the case in many other areas of the developing world. Similarly, solar radiation levels are high and relatively uniform compared to most other countries, which favors PV pumps. Direct transfer of the unit pumping costs given in the final report should be done only with a careful awareness of the critical input assumptions which can affect these costs on a country by country basis.

# AN OVERVIEW OF THE WATER PUMPING/SUPPLY IN ZIMBABWE

B. Byabura-Kirya
RESEARCH ENGINEER,
Institute of Agricultural Engineering,
HARARE - Zimbabwe

## 1.0 INTRODUCTION

Zimbabwe is located between latitudes 15.5o and 22.5o S of the equator. It occupies an area of about 390 000 km2 located on the great plateau of Southern Africa with most of the country lying above 800 meters above sea level between the great Zambezi and Limpopo rivers in the North and South respectively. A broad ridge of water shed with an average elevation of 1400 m runs across the country in a North-Easterly direction and provides its major source of the drainage system.

Zimbabwe lies in a low rainfall belt of Southern Africa. It receives between 300 to 1 000 mm of rainfall mainly in thunderstorms, occurring in only one rainy season between October and April. The country is subdivided by the Department of Agricultural, Technical and Extension Services (AGRITEX) within the Ministry of Lands, Agriculture and Rural Resettlement (MLARR) into five agro-ecological zones termed "natural regions".

The demarkation is basically base don rainfall distribution ranging from Region I with annual rainfall of 1 000 mm and above to Region V with rainfall between 300 - 450 mm annually.

Droughts are very common in the country with 12 droughts of equal severity to that of 1981/82 having occurred in the past 80 years. The government has thus placed water supply both for domestic and livestock requirements, and for agricultural crops among the top priority areas of national development plans.

## 2.0 DEVELOPMENT OF NATIONAL WATER SUPPLY NETWORK IN RURAL AREAS

In 1980, the United Nations Organization inaugurated the International Drinking Water Supply and Sanitation Decade, (I DWSSD), and the decade was launched in Zimbabwe in 1982 with the adoption of national goals and methods proposed for their fulfillment. The Ministry of Energy an Water Resources and Development (MEWRD) has produced a National Master Plan for Rural Water Supply and Sanitation in accordance with the Decade objectives.

The master plan provides the Government of Zimbabwe recommendations for the immediate and long term development of domestic rural water supply and sanitation in communal and resettlement areas, including provisions at service centers and growth points. It covers the phased construction and upgrading of 576 piped schemes to service centers, growth points and selected resettlement areas, and approximately 36,000 primary supplies by the year 2005. This will service about 330,000 people with piped water and 8.6 million with access to primary supplies.

A group of governmental and non-governmental institutions who are expected to participate in the execution of the plan are listed below with their major responsibilities.

Ministry of Energy and Water Resources and Development:

- to provide the technical and professional engineering services, responsible for overall technical design and advise in the exploitation of national water resources.

Ministry of Local Government:

- responsible for development of integrated regional plans and overall coordination.

District Development Fund:

- primary water supply development and maintenance of rural water supplies.

Ministry of Community Development and Women's Affairs:

- community mobilization and training.

Ministry of Health: - lead agency for health, education and rural

- sanitation, and hand-dug wells plus other small sector rural water supplies.

Ministry of Lands, Agriculture and Rural Resettlement:

- responsible for water supply on irrigation schemes in resettlement and communal areas covering planning, administration, maintenance and management. A separate document entitled "Rehabilitation and Development of Small Scale Irrigation Schemes in Communal Lands" has been prepared by this ministry.

Non-governmental Organizations:

- not specified in the masterplan have been heavily involved in the financing and construction of boreholes and hand-dug wells, including pump installation.

The major policy issues in the master plan include: integration of water, sanitation and health education; integrated district and provincial planning; piped/primary water supply mix, primary water supply mix community participation; payment and community contributions for water and sanitation, and a three-tiered pump operation and maintenance structure.

## 3.0 WATER SUPPLY REQUIREMENTS FOR IRRIGATION

With the rainfall situation as outlined above, profitable agriculture in Zimbabwe relies heavily on irrigation water. Water sources are generally large storage dams, flowing rivers, boreholes and wide bodied wells. The irrigation schemes in the country can be put into 5 categories, namely:

i) Large commercial estates: these comprise the large schemes in the South-Eastern lowveld of the country, viz: - Triangle (12000 ha), Hippo Valley (12000 ha) and Nkwasine (6400 ha). The schemes produce mainly sugarcane, cotton and citrus fruits applying both the flood and sprinkler irrigation methods.

ii) Private commercial medium schemes: these are schemes that were developed by commercial farmers as a supplement to their normal rainfed farming. They are under irrigation ranges from 20 - 100 ha per individual farmer giving an estimated total area of 90000 ha. Overhead sprinkler irrigation is the most common method of water application.

iii) State schemes: schemes managed on behalf of the government by the Agricultural Rural Development authority (ARDA) ranging from 100 - 2400 hactares per scheme.

iv) Settler schemes: these are schemes developed by Government through ARDA where land is allocated to people with an aptitude for irrigation farming. The size of plots allocated to farmers varies considerably from about 2 - 160 ha.

v) Communal schemes: these cover the small scale irrigation schemes developed and managed by the Ministry of Lands, Agriculture and Rural Resettlement. By 1985, 53 schemes with an area ranging from 2 to 400 ha had been developed and were operational. Irrigation

methods employed are mainly the flood type - border strip and furrow irrigation. Sprinkler irrigation practiced only on two of the schemes has not been successful under the small holder irrigation due to poor management.

Within the communal schemes, there are about 700 ha are irrigated under informal, privately organized schemes specializing in vegetable production. Production and irrigation efficiency in these schemes is so varied ranging from good to very poor. The schemes were developed as supplementary operations to dryland farming and livestock husbandry, and hence receive limited attention. They are viewed as a matter of survival for cash (market gardeners) and food by the operators.

Water lifting technologies in this sector is not well defined. Some individuals use small motorized pumps while others not affording or having access to a handpump still ferry the water in buckets.

## 4.0 WATER PUMPING SYSTEMS USED IN ZIMBABWE

The general factors that dictate the selection of the type of pumping system in relation to the energy source have played a big part in selection of the energy source for water pumping in Zimbabwe. These include: quantity needed and type of use for the water, system cost, location of site in relation to general infrastructure, technology availability for operation and maintenance, and availability of the equipment and spares on the local market.

The water supply schemes falling under the master plan can be grouped into three categories. The first are the piped schemes at growth points, service centers and resettlement areas where there are plans to connect them to the national electricity grid under the rural electrification program. Where the electricity is connected, it will be used for powering the pumps and diesel utilized in cases not covered by the grid.

The second category is of institutional water supply including schools, hospitals, community centers and religious missions where water requirement is low, about 7-15 cubic meters per day. These have been mainly supplied with handpumps. Only in a few cases are solar (pV) pumps installed under donor funding, and some missionary centers have windmills they have used for years. The third category is water supply to communal areas and resettlement areas not serviced by piped schemes and hence dependent on boreholes and protected wells. It is estimated that about 250 persons at 30 liters per capita per day be serviced by one borehole while 150 persons at 30 liters per capita per day be serviced by one well. A few of these schemes have been

serviced with windpumps under a testing program by MEWRD. The general application of windpumps in Zimbabwe having been popular in livestock watering only.

Most of these schemes have been installed with handpumps over the past few years. The pumps installed during the IWSSD in addition to those already in existence cover a wide range of designs. A technical task force has been set up within the community participation committee of the IWSSD to survey the technical performance and economic viability of nine selected pumps viz: Blair Bucket pump, Blair piston pump, Borehole bushpump, Well bush pump, Nsimbi pump, Monopump, Maldev pump, Bumi pump and Dunwell DWI pump. The aim is to come out with a standardized 5 modes of pumps to be manufactured and distributed in Zimbabwe. The study is already underway coordinated by the MEWRD, and information is being compiled through the use of manufacturer and pump user questionnaires.

Water pumping for irrigation encompasses the widest range of technology within Zimbabwe. The large commercial schemes in the southeast of the country depend solely on electricity from the national grid and on generation for their irrigation water pumping requirements. The state commercial farms use both diesel and electric pumping schemes, the use of diesel being dictated by lack of electricity supply to some of the remotely located schemes. Most medium private commercial irrigation schemes lies within the area supplied by the national grid and hence use electricity for their pumping. The small scale irrigation schemes operated by Ministry of Lands, Agriculture and Rural Resettlement are sometimes powered by diesel or electricity pumping, some of them even applying gravity abstraction methods - to reduce costs.

## 5.0 SYSTEM COSTS AND COMPARISON

Studies conducted at the Institute of Agricultural Engineering have shown that merits of one system over another are largely influenced by a number of technical, economic and social factors. In Zimbabwe, the cheapest pumps available on the market and locally manufactured are the handpumps. These range from the Bush Pump of about Z$150 per unit (excluding down the hole piping) to the monpump costing about Z$600. Windpumps are very expensive in Zimbabwe costing about Z$7 500 per unit of the 5,6 meter diameter rotor, manufactured locally. Solar pumps have a very high investment cost averaging up to Z$25 per peak watt of installed unit, with most of the cost being in foreign currency. Diesel and electric pumps still feature as the lowest priced energy sources when the per unit cost of energy is considered.

A cost comparison study conducted on using four different systems to supply water for human consumption from a borehole in a remote location indicated that wind energy water pumping was the cheapest in the long term. Solar pumps were disadvantaged by the high initial capital costs and forex component, while diesel pumps were eliminated by the high cost of imported fuel and maintenarce requirements. Handpumps were disadvantaged by the low output and hence requiring more pumps and expensive boreholes to achieve the same volume of water target.

Another study conducted at the Institute of Agricultural Engineering on six energy sources viz: human, animal, wind, solar, diesel and electricity supplying different quantities of water from varying pumping depths came up with the following findings:

- Diesel and electric pumping were still the cheapest for high energy water pumping demands i.e. high volumes at and or high heads. They are certainly the most cost effective for the large irrigation schemes and piped water supplies.

- Windmills were found not to be viable for irrigation pumping and the high capital cost of Solar photo-voltaic systems with a high foreign currency factor made them the least cost effective.

- The hand and ox-powered pumps were favorable for low lift irrigation pumping in the low income communal areas of the country. This is because cost of the equipment involved would be relatively low and other inhibiting factors like labor, and maintenance, technical know how are more likely to be found or developed in these areas.

Although the social factors that favor one technology to another have not been costed in the past analyses, they have proved the most crucial issues when pumping for rural areas is considered. For instance, the people might prefer to use handpumps although they have to labor hard doing the pumping, because they understand the simple technology of the pump and get a deeper feeling that it is theirs. They have more confidence when it comes to attending to minor repairs as opposed to say diesel or photo-voltaic solar systems. There is always the fear that more costly damage can be done if they make a mistake on the latter systems than the handpumps. For instance, cases have been reported where senior electrical consultants have been called upon to travel about 300 km to fix a broken down solar pump only to find that it was a fuse that needed replacement.

## 6.0 CONCLUSIONS

Zimbabwe has set up an infrastructure and plans with specified goals to meet the water needs of its population by the year 2005. With the plans properly executed by the responsible organizations as has been demonstrated in the past five years, there are little doubts that the main goal will be achieved.

The engineering research organizations and the local industry need to strive harder so as to meet the deficiency existing in water pumping equipment at affordable prices and easy to operate and maintain by the rural population, particularly for irrigation water supply.

# COMMUNITY PARTICIPATION:

## THE KEY TO CARE-CAMEROON'S NORTHERN WELLS PROJECT

Submitted by: Mark Henderson
Northern Wells Project Manager
CARE-Cameroon

## I. SUMMARY

CARE-Cameroon depends upon active community participation for the successful implementation of its Northern Wells Project in the Extreme North Province. Since 1980, CARE -- the international development assistance organization -- and the Department of Community Development (MINAGRI) have been operating together in the three administrative departments of Mayo-Tsanaga, Mayo-Sava, and Diamare to increase the number of permanent potable water sources for the region's rural inhabitants.

Community participation, a fundamental principle of CARE programming, is a key objective of the project as it is crucial to developing a sense of proprietorship for the well and, as a result, responsibility for it. Villagers must participate in the construction of the well by volunteering labor, lodging and feeding and well construction team, gathering local building materials, and erecting a protective enclosure of the well site after it is completed. A caretaker is selected who is trained to perform handpump maintenance and simple repairs. Through a cadre of 25 animators the project conducts follow-up health education activities focusing primarily on water handling and storage, waste disposal, and cleanliness of the well site.

## II. THE TECHNOLOGY USED

### A. The Wells

The majority of water points completed are hand dug wells, lined with prefabricated reinforced concrete rings. The top is covered by a concrete slab, to prevent contamination, on which the pump is installed. The slab has an access cover which allows water to be drawn by bucket in case of pump failure. A cement apron surrounds the well to drain away spilled water.

Air [illegible] jack hammers are often used to penetrate cemented sediments and soft rock. The depths of the wells range from 8 to 30 meters with an average depth of 12 meters. Since 1986 the project has also installed tubewells using a hand-powered boring rig. This equipment can drill to a depth of [illegible] meters [illegible] sediments but cannot penetrate hard material.



93

The Lake Chad Basin Commission assisted CARE in 1987 by furnishing a mud-rotary drilling rig and technicians for a 4-week pilot drilling program. Also, in 1986, the LCBC made available their Ingersoll-Rand high-capacity compressor for another short drilling exercise.

Since the project began, well completions have increased annually:

| | FISCAL YEAR | | | | | | | |
|---|---|---|---|---|---|---|---|---|
| | 81 | 82 | 83 | 84 | 85 | 86 | 87 | Total |
| Well Completions | 6 | 14 | 20 | 27 | 27 | 34 | (36) | 164 |

B. The Pumps

Until 1985 the project installed Robbins & Myers Moyno pumps, then switched to Monolift pumps of British manufacture. Both pumps are positive displacement types using a progressive cavity element to move water. Monolift was selected because of its lower cost, the promised availability of parts from a local distributor, and its higher output.

C. The Technical Staff

Operations are based in Mokolo, in the administrative department of Mayo-Tsanaga. Besides the office, facilities include a warehouse, a garage, and a workshop.

The well construction work is done by 7 well digging teams who are in the field from November through June. One other team fabricates the well rings in Mokolo for transport to the sites. These teams are supervised by 2 technicians who maintain a regular schedule of site visits. One pump technician installs and repairs all the CARE/CD pumps (160 by June 1987).

## III. THE CARE/COMMUNITY DEVELOPMENT STRUCTURE

A. The Community Contribution

CARE and the Department of Community Development cooperate closely to ensure that the rural communities who are benefitting from the project are also involved in its implementation from the start. Requests for assistance are submitted to the Section Chief of Community Development and then the sites are reviewed for technical feasibility. If positive, the villagers must agree to the following conditions:

1. To gather local building materials (sand, gravel, etc.).



84

2) To house and feed the well construction team.

3) To volunteer unskilled labor (6 workers per day).

4) To erect a protective enclosure of the well site at the end of construction.

5) To nominate local leaders who will be the focal point of subsequent health education activities.

6) To select a pump caretaker with mechanical abilities to be trained by the project.

7) To collect 12.000 francs CFA for the purchase of a tool kit for the caretaker.

B. The Animation Organigram

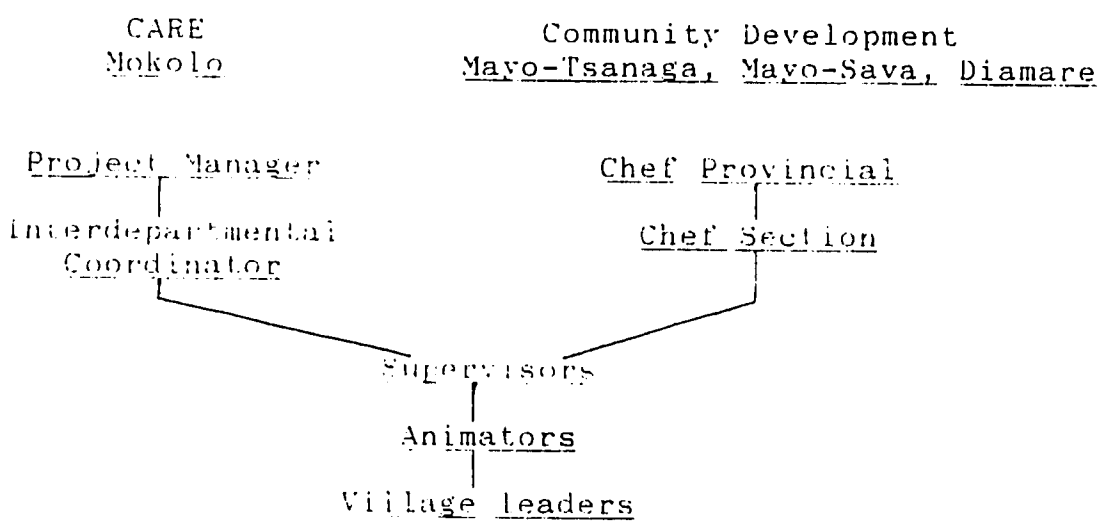


The animators (both men and women) are the field agents who are responsible for gaining the cooperation and active participation of villagers. They visit the villages which have been selected for a new well several times prior to the arrival of the well construction team. Village preparation includes the signing of a contractual agreement between CARE/CD and the village defining each partners' obligations. While the construction work is underway, they continue their supervision to maximize the village input and prevent unnecessary delays. The animators are either CD employees [illegible] the project, or are directly hired by CARE. They are all equipped with motorcycles to complete their field work.



85

C. Health Education

Health education follows the completion of each new well. Several village leaders are chosen by their community to attend a 2-day seminar organized by the project. Animators and supervisors give training sessions on well site cleanliness, water handling and storage, water-borne diseases, and latrine construction. These village leaders then become the frontline workers supported by visits by the animators.

D. Handpump Maintenance

To promote community responsibility and a longer life for the pump, the project trains a caretaker from each village to perform maintenance and diagnostics. One-day workshops gather 8 to 12 caretakers to learn about the pump operation and simple repairs. This program will continue until representatives from all 140 villages have been trained.

This is a first but crucial step towards creating a maintenance infrastructure which can replace the service coverage currently provided by CARE. To effect major repairs or maintain a stock of spare parts is beyond the capacity of most villages, so the project envisions the incorporation of the pump maintenance component into the regional governmental apparatus. FSAR (Fonds Special Action Rurale) installs and maintains hundreds of pumps in the Extreme North Province, including the Robbins & Myers and Monolift types. FSAR pump [illegible] are already based in each administrative department. An official request has been made from the Director of Community Development to FSAR asking that the responsibility for maintenance of pumps installed under the CARE/CD project be shifted to FSAR.

## IV. CONCLUSION

CARE and the Department of Community Development are striving for full community participation in the Northern Wells Project. They have committed considerable financial and human resources to maximize the involvement of the participating villages in this rural water supply project. The results achieved in the Extreme North Province of Cameroon show that they are on the right track.

# HANDPUMP MAINTENANCE IN THE EXTREME NORTH PROVINCE OF CAMEROON

Submitted by: Mark Henderson
Northern Wells Project Manager
CARE - Cameroon

## I. INTRODUCTION

Two rural water supply projects in the Extreme North Province of Cameroon provide examples of the costs and problems of handpump maintenance in Africa. CARE-Cameroon has implemented a well construction project with funding from USAID since 1980. A GOC program, FSAR (Fonds Special Action Rurale), with financing from the World Bank, has installed over 500 handpumps. The maintenance records and expenditures for the 1985-86 campaign for both projects will be examined.

### A. CARE Northern Wells

The Northern Wells Project is based in Mokolo, in the Mandara Mountains, and operates in the three administrative departments of Mayo Tsanaga, Mayo Sava, and Diamare. CARE's water points are mostly hand dug wells, lined with prefabricated reinforced concrete rings, and covered to prevent contamination. There is an access cover which allows water to be drawn by bucket in case of pump failure.

The depth of the wells range from 8 to 30 meters with an average of 12 meters. Since 1986 the project has also installed tubewells using a hand-powered boring rig. This equipment can drill to a depth of 20 meters in alluvial sediments but cannot penetrate hard material.

Six well construction teams work in the field from November through June, supported by 2 site supervisors. The current well completion rate is 35 per season.

Until 1985 the project installed Robbins & Myers moyno pumps, then switched to Monolift pumps of British manufacture. Both pumps are positive displacement types using a progressive cavity element (steel rotor in rubber stator) to move water. Monolift was selected because of its lower cost, the promise of parts availability from a local distributor, and its higher output. One pump technician installs and services the handpumps (129 as of June 1986).

### B. FSAR

The FSAR project is much larger, covering all six department of the Extreme North Province. The majority of FSAR pumps are found on tubewells drilled by private contractors or other government agencies. The average cost of a 40 meter drilled well is $10,000.

FSAR installs several pump types:

- Vergnet - pedal operated, hydraulic bladder
- Briau - lever operated, submerged piston
- Abi - similar to Briau, made in Abidjan
- Mono - crank operated gear drive, progressive cavity
- Robbins & Myers - crank operated gear drive, progressive cavity
- SWN - lever operated, submerged piston, PVC riser

The pump selection for each site is made according to the depth of the well, the well yield, and the predominant type of pump in that zone. Vergnet is preferred for great depths; piston pumps are better for higher output.

## II. CURRENT MAINTENANCE INFRASTRUCTURE

### A. CARE Caretaker Training

The Northern Wells Project is taking steps towards creating a maintenance structure which can replace the service coverage it currently provides. To promote community responsibility and a longer life for the pump, the project trains a caretaker from each village to perform maintenance and diagnostics. One-day workshops gather 8 to 12 caretakers to learn about the pump operation and simple repairs. The village pays $40 for a modest tool kit for the caretaker.

Making major repairs or maintaining a stock of spare parts is beyond the capacity of most villages, so the project envisions the incorporation of the pump maintenance component into the FSAR structure. An official request has been made from the Director of Community Development, CARE's government counterpart, to FSAR asking that the responsibility for maintenance of the pumps be shifted to FSAR.

### B. FSAR Maintenance Operations

The base of operations is at the provincial capital of Maroua. The pump section has 22 employees who run the workshop and compose 3 mobile installation and repair teams. The theoretical frequency of inspection visits is once a month.

In each department there is one pump technician who has a small stock of commonly used parts and a motorcycle. He calls on a Maroua team for major repairs.



88

Table 1. Pump Installation and Maintenance Costs for CARE and FSAR, 1985-86.

| | Number of Pumps | | | Average cost per pump | | |
|---|---|---|---|---|---|---|
| | New | Old | Total | Install. | Inspect. | Repair |
| FSAR | 129 | 396 | 525 | $1736 | $64 | $122 |
| CARE | 85 | 94 | 129 | $1660 | -- | $87 |

Note: Exchange rate US$1 = 300 CFA francs

The direct costs of installation include the pump price, direct personnel time, and (for FSAR) the concrete slab.

FSAR carries out extensive inspection field trips, monitoring 10 to 50 pumps at a time. CARE, however, responds promptly to news of individual breakdowns brought by its network of community development agents. The inspection responsibility now rests with the local pump caretaker.

## III. PUMP PERFORMANCE AND COSTS

### A. Robbins & Myers and Monolift

In the Northern Wells Project 70 Robbins & Myers pumps were installed from 1981 to 1984. Thirty percent have required servicing by June 1986. Fifty-nine Monolift pumps were installed from January 1985 to June 1986. Twenty percent have required servicing, all within 18 months after installation.

The principal problems with the Monolift pumps are due to the fast wear on the plastic gears and bushings in the drive head. The manufacturer is supplying the projects with replacement steel gears. This modification will include a change from the current anti-reversing pawl and ratchet which is too delicate and fails often.

The below ground components of Mono appear to be reliable.

The Robbins & Myers pump has given reasonably good service. The drive head is durable and solid, but problems have included crank arms working loose, and the anti-reversing clutch breaking, causing the rod to unscrew. Below ground problems have been broken rods and pipes, and pump element failure due to abrasive silt.

Spare parts procurement for both these pumps has been problematic. The in-country Monolift distributor has proven

to be interested solely in initial sales, and has not been a reliable source of spare parts at a reasonable price. Retrofit steel gears are being supplied by the manufacturer to both CARE and FSAR at no cost.

Robbins & Myers parts are virtually impossible for the FSAR to acquire as there is no local representative. CARE, however, with its New York procurement department, has been able to maintain a stock of parts.

The extreme difference in annual maintenance costs between Mono and Robbins & Myers shown in Table 2 below can be attributed to FSAR's lack of success in procuring Mono parts. Therefore, the frequent gear failures required a change of the entire drive head with its resultant high cost.

Table 2. Maintenance Costs for FSAR, 1985-86.

| Pump type | % service visits | Average cost | | |
|---|---|---|---|---|
| | | Install. | Per repair | Per pump |
| R & M | 10 | $750 * | $107 | $11 |
| Mono | 39 | $2316 | $1193 | $460 |
| Briau | 64 | $1480 | $190 | $120 |
| Vergnet | 30 | $1450 | $506 | $150 |

* Purchased at a great discount.

B. Vergnet and Briau

Briau and Abi are virtually identical pumps, made in Douala and Abidjan respectively. Even when parts are unavailable, these can be made at the FSAR workshop. There is fast wear on the above ground components, but the repairs are relatively inexpensive.

All Vergnet parts must be imported from France. The hydraulic bladder must be replaced frequently, accounting for the high cost per repair as seen above.

The pump section manager would like to see any future FSAR purchases limited to the Vergnet and Briau/Abi pumps.

## IV. A FUTURE MAINTENANCE MODEL

A high-level government commission is debating the problem of rural water system maintenance. The two pressing issues are the standardization of pump types within Cameroun and the establishment of user-fees. Assuming that the government will have to take a lead role, through such agencies as FSAR, the developing maintenance infrastructure in the Extreme North Province is worth looking at.

The provincial base of operations with technicians in each department exists now. What needs to be further developed is the district and village level coverage. It has been proposed that artisans, mechanically-minded motorcycle repairmen for instance, be encouraged to fill the gap between the departmental service and the village. This artisan would have access to parts, or could even fabricate some, and would be allowed to charge for his services within the government-established guidelines. Repair work beyond his capabilities could be referred to the departmental technician.

A village level caretaker training program, similar to that which CARE is currently implementing, will need to be carried out to complete the structure.

Much of this maintenance structure is still in an embryonic stage, but if the Government of Cameroon addresses this issue with the same determination and resources as it has others, there is every hope for success.

### Contacts

Mark Henderson
Northern Wells Project Manager
CARE - Cameroon
B.P. 306, Maroua
Cameroon

Gerard Pellegri
Chef Section Pompes
Projet FSAR
B.P. 201, Maroua
Cameroon



91

# "Use of Renewable Energies for Pumping & Lifting Water in Sudan" (Windpumps, Solar Pumps etc"

By

Dr. El Tayeb Idris Eisa
Coordinator
Sudan Renewable Energy Project
P.O.Box 4032
Khartoum

Prepared for

"International Conference
on Improved Water-Pumping/water Lifting",
April 5 - 10, 1987
GABORONE, BOTSWANA
March, 1987

## Contents

I. Introduction

II. Conventional Energy Situation in Sudan

III. Renewable Energy Potential in the Sudan

IV. Present Means of Water Pumping & Lifting (Irrigation & Drinking)

V. Use of Renewable Energy Technologies for Water Pumping & Lifting

VI. Conclusion & Recommendation

References

## I. Introduction

Sudan is the largest country in Africa; it has an area of one million sq. miles and population of about 22 million people. Sudan in common with many other countries has the problem of a scattered rural population. Most of the people do not have access to a modern domestic water supply. Usually during the dry season, naturally occurring sources of domestic water dry out before the end of the dry season and alternatives for providing water such as electric pumps, diesel pumps and wind pumps are required.

In the Sudan, work on attenatives (windmills) has been proceeding since 1955 for the purpose of pumping water (for drinking and irrigation) in remote desert areas; the Gezira region, the Red Sea hills and along the main Nile north of Khartoum down to Wadi Halfa.

## II. Conventional Energy Situation in Sudan:

### A. Energy Demand:

Energy demand in Sudan totalled 6,148 thousand toe (tons of oi equivalent in 1981. By far the greatest demand was the residential sector, accounting for 77:8% of residential demand was satisfied by non-commercial fuels, mostly fuelwood and charcoal.

Transportation accounted for 11% of total demand, or 674 thousand toe, all supplied by oil. Road transportation has increased recently compared with river and rail transportation industrial demand was 358 thousand toe. Roughly one - half of this amount was supplied by non - commercial fuels.

### B. Energy Supply:

Sudan's energy supply is dominated by non-commercial sources of energy.

Fuel wood, charcoal and Biomass accounted for 87.4% of total energy supply 1981. Fuelwood and charcoal supplied 7,765 thousand toe, while biomass provided 526 thousand toe.

Table 1

**Energy Demand 1981**
**(Thousand toe)**

| Sector | non-commercial | Commercial | Total | |
|---|---|---|---|---|
| Industrial | 175 | 183 | 358 | 5.8% |
| Transportation | - | 674 | 674 | 11.0% |
| Agriculture | - | 105 | 105 | 1.7% |
| Residential | 4,703 | 78 | 4.781 | 77.8% |
| Other | 177 | 53 | 230 | 3.7% |
| TOTAL | 5,055 | 1,093 | 6,148 | 100.0% |

Table 2

**Energy Supply 1981**
**(Thousand toe)**

| Resource | Total | |
|---|---|---|
| Fuelwood, Charcoal & Biomass | 8291 | 87.4% |
| Hydro | 188 | 2.0% |
| Oil | 1,005 | 10.6% |
| TOTAL | 9.1484 | 100.0% |

Commercial energy supply is virtually all in the form of oil. Oil suplied 1,006 thousand toe in 1981, or 10.6% of total energy supply.

Hydroelectricity provides a modest amount, 2% of total supply in 1981. The electrical distribution system, the Blue Nile Grid, is poor.

### C. Energy Resources, Production & Imports:-

Considering the size of the country (one million square miles), Sudan has very few energy resources. Its reliance on fuelwood is threatened by deforestation.

Energy forestry has potential to augmont this resource.

For commercial fuel, Sudan relies on imported oil in 1981, 1,146 thousand toe was imported. 141 thousand toe was exported. The country has some domestic crude oil Recent finds of oil in the South and natural gas in the Red Sea Hills should contribute to supply, but pipelines have yet to be built. Hydropower is a significant potential resource, but it has yet to be studied.

## III. Renewable Energy Potential in the Sudan:

Research work on renewable energies started in Sudan early 1970's in National Council for Research with data collection, development of manpower and the necessary equipment. At present a Renewable Energy Research Institute is formed and all the work concerning research, development and technology promotion is carried out by this institute (RERI test site at Soba).

### A. Solar Energy Potential:-

Radiant energy form the 'Sun' is believed to be the original source of the types of energy used today.

The potential of the Sun's energy in the Sudan Fig. (1) is ca. 300 $w/m^2$ averaged over 24 hours through-out

the year ref (1). Research, development and promotion continue in the Renewable Energy Research Institute (RERI).

A substantial contribution to Sudan's Rural energy requirement from solar could perhaps be expected in the very near future.

**B. Wind Energy Potential in the Sudan:**

Concerning Wind Energy Potential in the Sudan Fig. (2) indicates, that Sudan possesses favourable winds particularly in the Northern parts. Wind energy is more appropriate than solar energy if utilized in tasks like water pumping. With a tap in the village, people need to waste less time and energy to carry out water and can therefore use their time for other activities e.g. education, and village life will be more comfortable.

Consideration should also be given to the potential of wind power for uses other than pumping e.g. for electric power. A program of wind power for generating electricity as well as for pumping water appears to be attractive for rural development, e.g. lights, radios, television etc. Wind electric generators can be utilised to meet the power requirements of the isolated settlements.

For a typical small village of 800 people presently an installed capacity of about 35 KVA might be sufficient for domestic use and streal lights.

The installed capacity may be vaised with the growth in agro industrial activity of the village.

Wind energy is found to match well with the demand pattern of the loads; higher load during the day for water pumping and power with lower loads during the high for ilumination.

On the average the availability of energy from wind during 8. a.m. to 7. p.m. could be twice as much as the energy availability during 8. p.m. to 7. a.m. ref (2).

This matching between the availability and the load is attractive. However energy storage would still be necessary to insure against windless days.

C. **Biomass:**

Biomass represents the predominant source of energy in the Sudan (83% of total primary energy in 1981). All projections confirmed that this trend will remain the same for the coming future.

However for the purpose of Biomass supply the followings must be the priorities for research and developing:

1. Improving the present means of cooking stoves. Taking into consideration simplicity, local material local tools, heat transfer and proper insulation.

2. Improving ways of fuel wood combustion.

3. Improving means of fuel wood production e.g. charcoal kilns, and studying the possibility of producing charcoal from agricultural residues e.g. cotton stalk, peanut shells etc.

4. Encourage plantation of quick grown trees mainly for fuel wood supply.

## IV. Present Means of Water Pumping & Lifting:

a. Electric pumps:

These are satisfactory but can only be used in limited areas where electricity is available.

b. Diesel Pumps:

Large and small diesel engines - but these suffer from a number of problems, e.g.

1) Unavailability of diesel fuel in some areas

2) Uncertanity in diesel fuel supply, particularly in the wet season

3) Shortage of skilled mechanics for maintenance and repair

4) Long distances to nearest repair workshop

Because of the above mentioned problems the use of alternative pumps means in places where there is no electricity is preferable to using diesel pumps, especially in the case of pumping water for drinking purposes.

## V. Use of Renewable Energy Technologies for Water Pumping & Lifting:

Sudan is heavely depending on importing oil. There is no chance in the near future for oil findings. Therefore a substitution is necessary. There is a large potential of renewable energies in the Sudan. This potential can play a major role in meeting generally the rural (80% of Sudan Population) energy needs and in particular for water pumping & lifting.

Use of large small scale windpumps for pumping underground water can contribute a lot for irrigation and water drinking.

How ever the Soc-Economic of renewable energy technologies is an important measure on their use compare to the present means. Table 3 shows possibilities of the use of wind pumps, solar pumps and diesel pumps, based on local data.

## VI. Conclusion & Recommendations:

1. Sudan is heavly depending on imported oil. There is no chance in the near future for oil findings. Therefore a substitution is necessary.

2. There is a large potential of renewable energies in the Sudan. This potential can play a major role in meeting

Table 3

(Based on Local Data , 1986)

| Depth (m) | Capacity($m^3$) | Recommend to use |
|---|---|---|
| 1-5 | Up to 20 | Solar pumps |
| 5-60 | Up to 100 | Wind pumps (irrigation |
| 60-120 | up to 200 | Wnd pumps (drinking only). |
| 120 | more than 200 | Diesel pumps (solar pumps)* |

* Initial cost is very high compared to the end use income.

the energy neds of isolated communities. More than 80% of Sudan population leaves in rural areas. Most of them are not in te natinal electric grid. The renewable energy technologies can be used in the following ways:-

2.1 Small scale solar energy system has proven to be competitive to conventional devices of the same size. e.g.

2.1.a. Potable solar Lamps to be used by the villager in clubs, clinics, schools etc.
2.1.b. Educational Solar T.V. Systems.
2.1.c. Solar Fridge and deep freezers for the use of health services.

2.2 Ref (3) shows that an annual average wind sped of 5 m/s can be found in more than 60% of Sudan area. And an annual average of 3-4 m/s can be found in more than 80% of Sudan area.

2.2.a. Therefore the use of large small scale windpumps for pumping ground water can contribute a lot for irrigation and water drinking.
2.2.b. Medium to small scale wind generator (1 KW-30 KW) can be used for producing energy.

2.3 There is a real potential for minihydro system. A head of 1-100 metre can easily be found in the Southern part of the Country. Central region and along the main nile in the Northern region,. The major problem is that, where there is a minihydro potential, either the site will be in national electric grid or no population around it.

2.4. Sudan is famous of the big agriculture projects. That means there is a large amount of agricultural residues. ~~Table~~ X 1.
This agricultural residues can be used as a new source of energy means e.g.

2.4.a.Energy supply from peanut shells.
2.4.b.Producing charcoal from cotton stalks or baggas.

102

2.4.c. Biogas system by using cotton stalks or animal waste for producing ga.

## REFERENCES


1. Dr. El Tayeb Idris Eisa
"Potential & Applications of Wind Energy Application in Sudan"
Proceeding of the International Southern Africa Workshop Dakar, 1983.

2. Dr. El Tayeb Idris Eisa
"Wind Pump System Model"
Wind Engineering, Vol 6, No. 7, 1982.

3. Dr. El Tayeb Idris Eisa
"Theory, Design and Testing of a Differential Pump Based on Induced Flow"
Proceedings of the 2nd International Conference on Wind Energy Systems, Amesterdam, 1982.

4. Dr. El Tayeb Idris Eisa
"Performance Measurements On the Six Meters Diameter Horizontal Axis Windmill"
British Wind Energy Association, London, U.K, 1980.

5. Dr. El Tayeb Idris Eisa
"Weibull Distributions in Wind Energy Statistics"
Proceeding of the 4th Int. Conference on Wind Energy, Rome, 1984.

6. Dr. El Tayeb Idris Eisa
"Energy In Sudan"
International Power Generation, Redhill, London, U.K., 1979.

7. Dr. El Tayeb Idris Eisa
"Design for Airlift Pump for Lifting Ground Water"
"Engineering Science", Khartoum 1984.

8. Dr. El Tayeb Idris Eisa
"Wind Power in Sudan"
Proceeding of the International Conference on Small Scale Energy For Developing Countries, London, U.K., 1980.

9. Dr. El Tayeb Idris Eisa
"Renewable Energy Potential and Applications"
Virginia, U.S.A., 1983.

10. Evaluation of the Meteorological
Data of Soba (Khartoum), with respect to Renewable Energy by Dr. R. Posorski and Mr. Suliman M. Ahmed, RERI, SEP, 1984.

11. Wind Energy Application in Sudan by Mr. J. P. Molly, 1985 SEP.

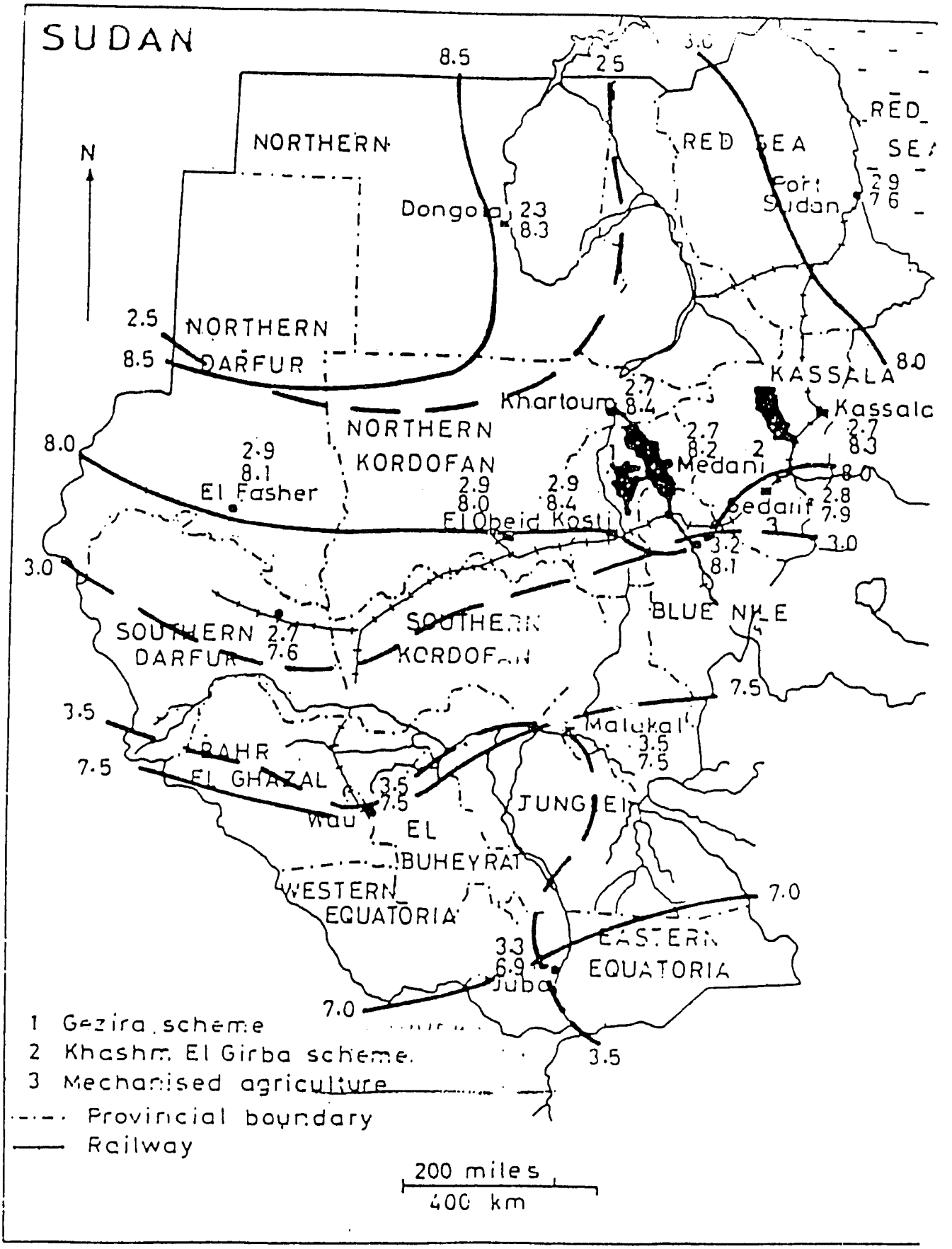


Fig. I Distribution of total and diffuse radiation, annual values in GJ $m^{-2}$/year.

——— Total radiation

- - - - Diffuse radiation

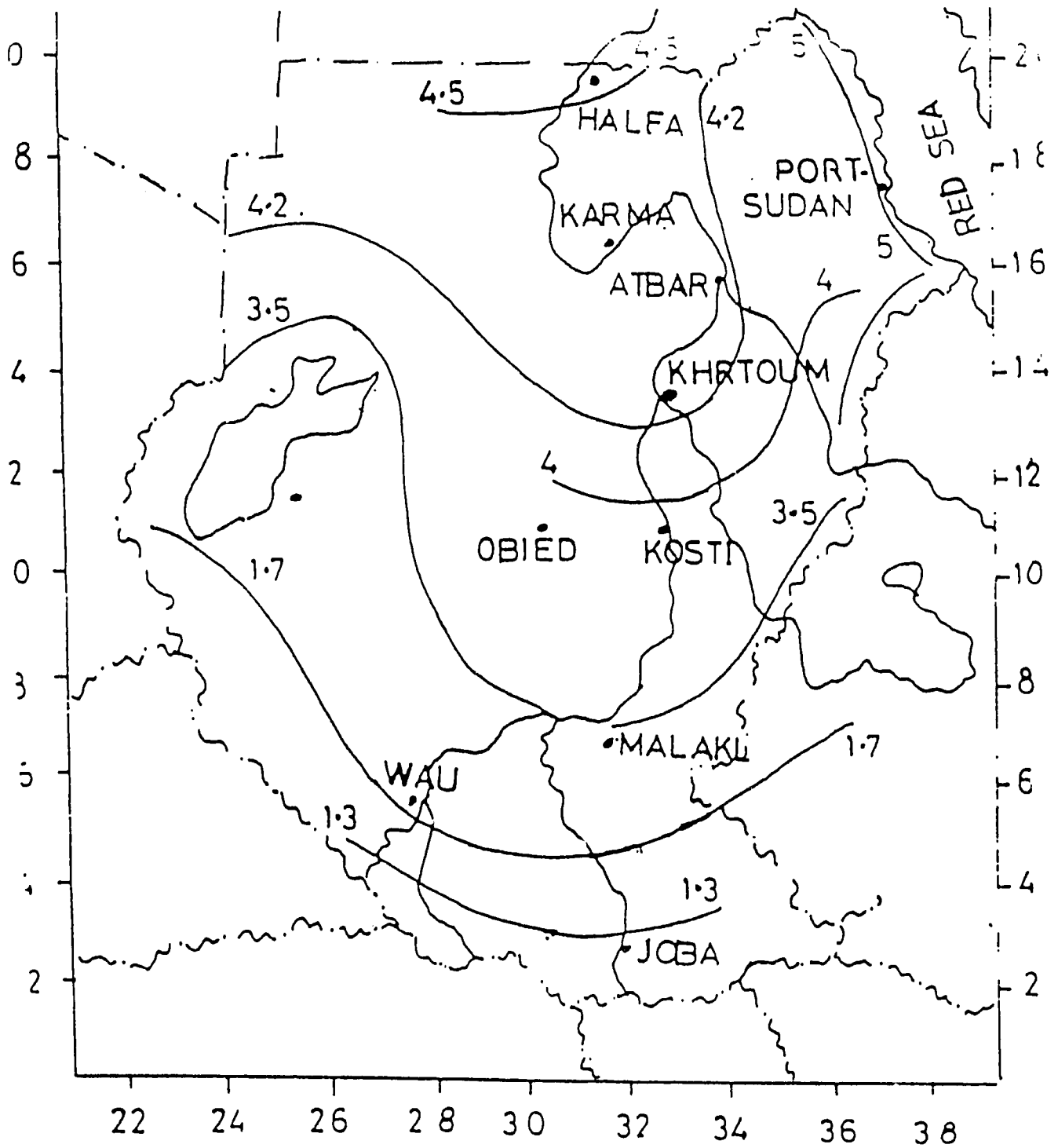


FIG.(2): ANNUAL AVERAGE WIND SPEEDS (M/S) OF THE SUDAN.

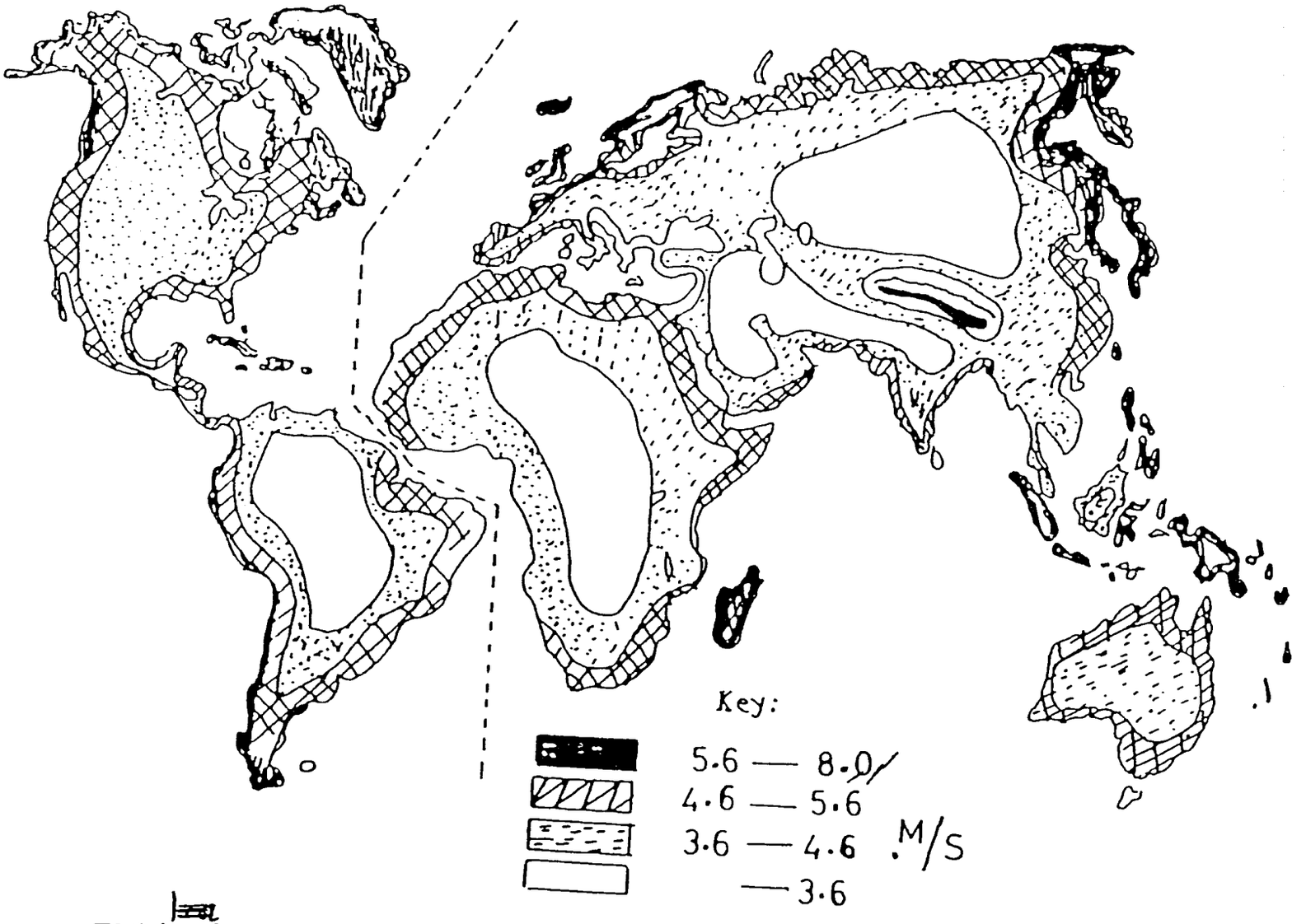


FIG.(2) ANNUAL AVERAGE WIND SPEEDS OF THE WORLD.

SOURCE: MOLLY, 1976

# NEW DIRECTIONS FOR AID's RENEWABLE ENERGY ACTIVITIES

Prepared by

Renewable Energy Applications and Training Project,
Office of Energy,
Bureau for Science and Technology,
U.S. Agency for International Development

(USAID Project No. 936-5730)

February 20, 1987

# EXECUTIVE SUMMARY

This interim report responds to the AID Administrator's call for a critical reassessment of the Agency's experience with renewable energy. The reassessment is intended to clarify lessons learned and to set future directions. The interim report is meant to elicit comment and debate on the proper role and emphasis to be given by AID to renewable energy applications.

## Summary

The most important new directions identified in this report, and the ones the reader is requested to pay the most attention to in his or her comments, are as follows:

1. The report proposes that the Agency set a new policy for renewable energy technology development that focuses AID activity on private sector implementation of commercially proven renewables.

2. It proposes further that the Agency place highest priority on a small number of renewable technology applications that have been shown to be commercially viable.

The report also describes today's climate for renewable technology development in light of recent trends in world oil prices, describes the status of various renewable technologies, establishes a list of priority applications, and describes general lessons learned and the role of the private sector. It then sets out new directions for AID renewable energy activity and describes next steps in completing the final renewable energy reassessment.

## Background

A decade ago, renewable energy sources--solar, wind, biomass and small hydropower, among others--promised to solve many energy problems for developing countries. A number of renewable energy projects ensued, many of which were sponsored by AID as well as by other bilateral and multilateral assistance agencies. The result is that a number of technologies still experimental in the mid-1970s have now been shown to perform reliably. However, in the process a number of problems have arisen, with the result that only a small number of renewable energy projects have led to significant and sustained supplies of energy.

Oil Price Influences. The roles played by renewables and other alternative sources of energy in the future will be determined largely by their comparative economics and reliability versus conventional fuels, particularly oil. The recent drop in oil prices and oil supply surplus require a re-evaluation of the competitiveness of renewables. Oil prices in 1986 declined sharply from about $27 to $10 at one point. By early 1987, prices rebounded to $18 per barrel. Current projections, although highly uncertain, indicate potential for significant real price increases in the 1990s.

Certain renewable options such as ethanol, solar water heating for industry, and some biomass-fueled power systems are more adversely affected by lower oil prices. In other cases, renewable competitiveness is not significantly changed. This is true for remote and rural settings where petroleum fuel supplies are costly and unreliable, and where abundant local wind, solar, or hydro resources also exist. It is evident from past and likely future price and supply changes for oil that a flexible AID renewable strategy response is required. Furthermore, it is apparent that a number of renewable energy applications remain competitive even at lower oil prices.

## Lessons Learned

The main lessons described in this interim assessment are

### Lessons from Renewable Applications:

- Large-scale introduction of new renewable energy sources has not yet been achieved. A major cause of this is the lack of emphasis on use of the private sector for implementation and lack of emphasis on commercialization.

- Much renewable energy technology has matured. While many R & D efforts have not succeeded, a significant number of technical approaches have been adequately demonstrated to be reliable.

- Project risks can be reduced by avoiding technology options which are commercially unproven.

- Only renewables able to compete in the marketplace in the near future are likely to be successful.

- Fuelwood projects have the greatest chance of success where they increase cash income, and where fuelwood is a commercial commodity. Private fuelwood production is likely to be much more cost-effective than government efforts, but government plays an essential part by supporting production.

### Conditions for Successful Projects and Innovations:

- Local user acceptance determines whether a new renewable application succeeds or fails. User involvement in project design, implementation and evaluation should be a requirement.

- Project ideas and designs cannot simply be transplanted from place to place. Applications must be tailored to local market, physical, and economic conditions.

- Lack of attention to "after-sales" service, that is, maintenance, spare parts, and local skills development, is usually fatal to a project.

- Private sector adoption of technology is the best way to ensure success.

- Renewables cannot compete when other fuels are subsidized, or other unfavorable policy conditions exist. Policy conditions require up-front attention before committing funds.

- Learning from past experience is severely handicapped by the lack of adequate documentation. Improved interchange of results and methods of application can make a major difference in the rate of future success.

Directions for AID Policy

Despite the mixed results of AID renewable energy projects to date, and recent instability in oil prices, focused efforts need to continue to commercialize and use selected renewable energy technologies. The goal of AID should be to continue, and even expand, carefully selected renewable applications based upon the considerable knowledge and experience gained thus far. Future renewable projects should be undertaken where a strong need exists, and the technology and application are designed in view of past experience.

Several priority directions are recommended:

1. Private Sector Emphasis. AID support for renewable energy applications should focus on private sector implementation of options shown to be technically sound and cost-effective in meeting energy needs. Public sector activities should be supported only to the extent that they are necessary to accomplish such private sector activities. The following criteria should be applied to new renewable projects:

   a. A substantial market should exist.

   b. The technology should be technically and commercially viable.

   c. Government policy relative to pricing and other critical conditions must be favorable, or the government must be willing to make necessary changes.

   d. The local private sector should be the primary vehicle for implementation.

   e. US private sector interests should be encouraged to participate, and to make the necessary commitments of time and finances.

2. Priority Renewables and Applications. AID should only promote those renewable energy applications able to compete in the marketplace. Attention should be focused on a limited number of

priority technologies and applications. In light of the limited resources available to AID, as well as AID goals, high priority renewable applications to be pursued are the following:

a. direct combustion of biomass for power;

b. small hydropower systems for productive rural uses;

c. briquetted agricultural residues for household fuels.

Second priority applications are the following:

d. photovoltaics for communications, health and other remote uses;

e. wind systems for pumping and rural electricity;

f. solar thermal systems for heating water and crop drying.

Renewable Energy Applications and Training Project

This reassessment of past experience with AID renewable energy projects is being undertaken as a part of the Renewable Energy Applications and Training Project (REAT). The final assessment report will be completed by the end of 1987, and is to include:

1. a completed assessment of renewable energy technology status, economics, and lessons learned from AID and other donor experience;

2. a proposed strategy for focusing AID renewable energy programs on the private sector;

3. guidelines and technical information for AID missions and developing country personnel for use in renewable energy project preparation and management, and for renewable energy project evaluations;

4. an accessible information base on AID renewable energy technology experience for use by missions, the private sector, LDC energy agencies, and other donors.

The REAT project will include a number of other activities which will run concurrently and continue after the final assessment report. These include the implementation of a private sector strategy for renewable and alternative energy initiatives, pre-investment studies, and information dissemination to assist in renewables implementation.



112

## Some examples and references of the French Aid in Waterpumping/Waterlifting in Africa

First, I would like to thank the Botswana authorities and Usaid who invited me to attend this Conference on Waterpumping/Waterlifting in Africa.

These issues are very important for the French Aid, particularly, and as mentioned in the objectives of this conference, because of the exchanges of field experiences and a better coordination between the donors, according to the demands of the national authorities.

I have already heard very precise and well-documented reports of pumping projects : the principles and guidelines expressed are quite compatible with the French Aid action in Africa which amounts to FF 1 billion (about US doll. 150 M), every year.

So, I'll give you only some brief spots about four examples of results and will submit you questions that can be answered only within a general agreement.

Then, according to the field results, to the demands expressed by the national authorities, to the development of new technologies, I'll give you my own view and opinion about the field of the water resources mobilization and water pumping-water/lifting.

EXAMPLE I : MALI AQUA VIVA

Here is an example for which the French Aid supported a non governmental organisation initially independent with a lot of private financing for a programme which was developed and diversified following the national options of Mali and the amount of the French Aid is today of 3 billion FCFA (about 10 M US doll.).

Mali Aqua Viva is set up in a sahelian area with a from 600/1 000 mm rainfall and located on a substratum of Koutiala Sandstone. Drill boreholes have been carried out, in a first stage without prefeasibility studies and then with proper investigations as it was discorvered that this way the failure rate would decrease and the use of existing means would be improved.

From 1975 to 1987, more than 1 800 drill boreholes were achieved with an average depth of 60 m with a 78 % success rate and a cost of FCFA 4 M. (US doll. 13 000) for the borehole equipped with a handpump.

On the other hand, numerous solar equipments were set up for the pumping (gardens, drinking water, buildings, fisheries,etc.) but also for other uses : lighting, refrigeration, health, etc.

This important sample of sixty units with a total power of 80 KW was evaluated as follow :

. Since 1974..... 1 800 well drillings
1 500 Mandor footpumps
60 solar pumps

. Before, villagers used to walk nearly 10 km during dry season

. A structure (Mali Aqua Viva) manages the programme
- 4 drilling teams
- 1 footpump team
- 1 solarpump team
- 1 mechanical and logistics centre

60 nationals and 4 expatriates

. The solar programme
- 1983 : . 30 pumps totalling 39 KWp
. 1 generator for SAN Hospital 8,6 KWp
. 4 fridges 0,6 KWp
. 4 schools lighting kits
- 1987: . 60 solar pumps 80 KWp

Interdistance 5 to 20 km

. No installation if villagers do not contribute at least 3 to 5 000 US doll. They do it.

. Villages over 500 inhabitants : 20 to 45 $m^3$ a day - 20 m average depth

. Water used mainly for people, animals, brick making

. surplus for vegetables, gardening

. Local works : . tank 8 $m^3$
. Basin 30 $m^3$
. Waterbasin for animals 20 $m^3$
. Washing area 20 $m^3$
. Waste water sunk after stone drain

. Total investment 0,3 US doll. per $m^3$ in solar pumps at 20 m head.

. Cost of an installation 1300 W for 30$m^3$/day

| | million FCFA | US dollars |
|---|---|---|
| - Purchase | 7 | 22 000 |
| - transport | 1,5 | 5 000 |
| - installation on the site | 4 | 13 300 |
| | 12,5 | 40 300 |

. Maintenance
- Senior expatriate and technicians

./.

114

- 4 wheel drive + lift truck for long shaft pumps
- need for subrenter
- associate with water development and management programme
- charge annual maintenance cost for the villagers :
  200 to 300 US dollars a pump a year (about 0,06 US dollars/$m^3$)

Three main conclusions :

a) the project was first independent and then was fully integrated into the national programme

b) it was important enough to obtain general valuable information on water resources, energy and other actions (health, maintenance...)

c) the external French Aid in this case was absolutely necessary for a better intensification : implementation and follow up of the works, maintenance and other actions.

EXAMPLE II : TRANSPAILLAR (C.I.R.A.D.)

This experience was achieved in Senegal, Burkina-Faso and Niger with the set up of an experimental equipment, but which could be now, I think, settled by African farmers.

The equipments are described on the schemes of the document ; for a US dollar 15 000 investment it is possible to obtain with litters of 4 milk cows about 17 t. of compost and a quantity of energy which would save four times the fuel consumption (a yearly saving of 2 000 US doll. with usual engines (Bernard, Lister, Hatz...).

Other development examples of gas generators and "Dual" engines (gas + fuel) using biomass are available and I have documentation and references.

EXAMPLE III : SENEGAL VALLEY

You know the Diama Dam (achieved in 1986) and the Manantali Dam which will be achieved in a near future.

They are a first step to the development of the Senegal River, which will be performed only with pumping.

The energy needs are estimated on a long term at more than 200 GWh, i.e. the quarter of the Manantali production.

I will quote two examples :

- Electrification of pumping stations of the Senegal Low Valley ; it has permitted to obtain a decrease of 75 % of the operation costs.
- The development of an experimental programme for the improvement and follow up of solar energy for pumping and domestic uses : lighting, TV, refrigeration...

./.

115

EXAMPLE IV : **Rural & periurban hydraulic**

For the water supply of the population located in the suburbs of Niamey, because of the drought, a programme of 120 boreholes has been set up in 1984 and 1985 for an amount of 12 M FF (2 M US dollars).

Each part of 60 boreholes was achieved within a few months and equipped with handpumps with the following results :

. 95 % success rate

. Chemical and bacteriological water quality always good

. Equipment with handpumps and then on several boreholes with mechanical pumps

. Low cost of the water (four times lower than the one of the public network)

. Immediate transfer of the responsibilities to the population who have used the water for small irrigation.

Perhaps it is a new kind of urbanization with "green areas" in town.

Finally I quote the programme of several hydraulic set up by the Conseil de l'Entente : 5 000 boreholes in Ivory Coast, Togo, Niger, Bénin, Burkina-Faso, to be achieved in 9 years from 1987 to 1990.

The results are available in a document.

For the future we emphasize

. the maintenance with training, African manufactured pumps, set up of a spare parts network

. the follow-up of the water resources both on quantity and quality

. the improvement of the water use for small irrigation and other.

I have described some examples : I do not wish to be too long on the problems that we all know very well and I agree with the previous speakers.

I would just like to emphasize some general points of view for which I have a deep conviction :

1) The water is almost everywhere in Africa, even in Sahel areas and deserts, but its mobilization needs specific technics, particularly for the underground water

2) In West Africa the programmes of irrigation and rural hydraulics are very important : more than 10 000 boreholes each year. Only a small part of available water is effectively used because of the pumping problems : motorisation, energy, maintenance...

3) The technical evolution is very quick and we think it necessary to obtain a maximum of references of new technologies.

For the future, we could perhaps foresee a better cooperation between national authorities and donors for exchanges of information, training, research development, follow-up...

France has an information system for the developing countries called IBISCUS with already more than 30 000 references and we suggest you use it at your convenience.

Ministère de la Coopération
Centre de Documentation
1bis, avenue de Villars
75 007 Paris - FRANCE

Tel. : (1) 44 55 59 54
Tlx. : 202 363 F

117

# DOCUMENTATION

## 1. HANDBOOKS

. Energie de pompage GRET 1985

. Energies renouvelables au Sahel SEMA 1981

. Mi:rocentrales hydrauliques GRET 1980

## 2. MALI AQUA VIVA

. Rapport n° 8 - 1987

. Présentation et élaboration du Programme Energie renouvelable Mali Aqua Viva 1984

## 3. PHOTOVOLTAICS PROGRAMMES

. Execution of Photovoltaic pumping Programme AFME - nov. 1985

. Photovoltaic pumping system Total

. Le pompage Photovoltaïque - B. CHABOT - 1987

. Solar Energy for preelectrification - 1985

## 4. BIOMASS

. Gazogène Chevet

. Transpaille

. Martezo

## 5. RURAL WATER SUPPLY

. Niamey

. Conseil de l'Entente

# IBISCUS

Ensemble des fichiers
Nom d'accès : IBIS

G.CAM Serveur

# SYSTÈME D'INFORMATION SUR LES PAYS EN DÉVELOPPEMENT

## LA PREMIÈRE BANQUE DE DONNÉES MONDIALE DANS CE DOMAINE

**CARACTÉRISTIQUES**

**Domaines**
- Économie — marchés — produits,
- Import — Export.

**Type**
- Bibliographique avec analyses approfondies des documents répertoriés,
- Répertoire d'organismes Tiers Monde (ONG).

**Contenu**

Ensemble de fichiers coordonnés pour :
- Mieux connaître la situation économique et sociale des pays en développement,
- faciliter l'étude et la mise en œuvre des politiques de développement, des projets et opérations, des applications de la recherche,
- connaître les organismes qui y travaillent.

1) Un fichier bibliographique de 34 000 références sur les thèmes :
- économie, commerce, finances,
- développement rural, génie rural,
- artisanat, agro-industrie, industrie, énergie,
- génie civil, transports,
- milieu humain, éducation, formation.

2) Un répertoire de 600 organismes français associés au développement (en cours de réalisation) qui indique :
- l'adresse des organismes,
- leurs activités,
- les pays avec lesquels ils travaillent.

3) Un fichier descriptif des opérations de développement (en projet).

**Langue** Française.

**Sources**

Un réseau d'organismes spécialisés :
- Administration et organismes de financement :
  Ministère de la Coopération ;
  Caisse Centrale de Coopération Économique,
- sociétés de développement : BCEOM, BDPA, SCET AGRI, SEDES,
- organismes de recherche et de formation : ORSTOM, CNRS-CEGET, IREP, CIFACE.

**Période couverte**
- références bibliographiques depuis 1972.

**Volume**
- 34 000 références au 1.10.86,
- 600 organismes.

**Mise à jour**
- bimensuelle pour le fichier bibliographique,
- mensuelle pour le répertoire d'organismes.

**PRINCIPAUX AVANTAGES**
- le seul ensemble coordonné spécialement conçu pour les pays en développement,
- des références bibliographiques inédites,
- accès à des micro-fiches de documents non publiés,
- des organismes responsables des informations fournies par leurs soins,
- interrogation simple en langage courant (logiciel standard GCAM/BRS),
- coût réduit,
- gain de temps,
- accessible 7 jours sur 7.

**UTILISATEURS**
- praticiens du développement, administrations, entreprises, organismes de crédit en relation avec les pays en développement,
- organismes Tiers-Monde (ONG),
- chercheurs ou étudiants souhaitant connaître le contexte dans lequel se situe leur recherche,
- pays en développement,
- presse et médias,
- partis politiques, etc...

119

# UN RESERVOIR D'INFORMATIONS EXCEPTIONNEL, DES REFERENCES INÉDITES DISPONIBLES CHEZ VOUS INSTANTANÉMENT

## EXEMPLES D'INTERROGATIONS

**Sur l'ensemble de la référence :**

Un organisme _____ CCFD
Une zone géographique _____ VÉNÉZUÉLA
Un thème _____ TÉLÉDÉTECTION

**Sur un paragraphe :**

Un auteur _____ SEDES.AU.
Un mot-clé _____ AGROFORESTERIE.MA
Une zone _____ ABIDJAN.GE.

**Recherches combinées :**

_____ FILIÈRE ÉCONOMIQUE ET (ÉVALUATION PROJET)
_____ BCEOM.AU. ET (BARRAGES SOUTERRAINS) ET MONOGRAPHIE.NA.

## EXEMPLES DE DOCUMENTS

**Question : (GUINÉE ÉQUATORIALE.GE.) ET (DÉVELOPPEMENT RURAL)**

POUR TOUT SAVOIR SUR LES PAYS EN DÉVELOPPEMENT

| | | |
|---|---|---|
| Numéro | NO | 15090 |
| Producteur | PR | BDPA |
| Année | AN | 1984 |
| Domaine | DO | ÉCONOMIE AGRICOLE, HYDRAULIQUE, BIOLOGIE, HYGIÈNE, ALIMENTATION HUMAINE. |
| Zone géographique | GE | BATA (GUINÉE ÉQUATORIALE) |
| Auteur | AU | Organisme : BDPA. Auteur : APESTEGUY (CHRISTINE), BENITES (ALFREDO), SALLE (JEAN CLAUDE), LEGER (J.C.). Affiliation : BDPA. BDPA. BDPA. BURGEAP. Bénéficiaire : GUINÉE ÉQUATORIALE. MINISTÈRE DE L'AGRICULTURE DE LA PÊCHE ET DE L'ÉLEVAGE. |
| Titre | TI | PROYECTO DE DESARROLLO RURAL EN EL DISTRITO DE BATA REGION CONTINENTAL. PROJET DE DÉVELOPPEMENT RURAL DANS LE DISTRICT DE BATA RÉGION CONTINENTALE. |
| Origine | OR | PARIS : BDPA, 84/05/00. - 290 P. cartes ; graphiques ; tableaux ; langue du résumé : FRANÇAIS. En annexes : 1) étude socio-démographique du district de Bata ; 2) données agro-économiques ; 3) des données complémentaires pour hydraulique villageoise, dispensaires, pistes. (consultable sous réserve de l'accord des organismes propriétaires de l'étude). |
| Mots clés | MA | COLLECTE DES DONNÉES. EXPLOITATION FAMILIALE. CULTURE VIVRIÈRE. EXPÉRIMENTATION AGRONOMIQUE. INTRANT AGRICOLE. VULGARISATION. CAPRIN. PISTE AGRICOLE. FORAGE. SOINS DE SANTÉ PRIMAIRE. ANALYSE COÛT AVANTAGE. OPÉRATION DE DÉVELOPPEMENT RURAL. COLLECTE DES DONNÉES. EXPLOITATION FAMILIALE. DISPENSAIRE MÉDICAL. ÉTUDE DE PRÉFACTIBILITÉ. |
| Résumé | RE | Le document propose pour la 1ère phase (3 ans) d'un projet de développement rural intégré comprenant le développement des cultures vivrières : la mise en place d'intrants, un programme d'hydraulique villageoise, d'équipement sanitaire et de restauration de pistes rurales. Le coût de ce projet est de 600 000 000 CFA sur 3 années. Ce projet de développement rural intégré (1ère phase) est destiné à améliorer les conditions de vie des populations du district. Quatre secteurs d'activités sont étudiés : agriculture/élevage ; hydraulique villageoise ; santé ; pistes. Pour chaque volet le programme d'actions est précédé d'une collecte de données physique et/ou socio-économiques. Les actions prévus sont : l'amélioration des facteurs de production des cultures vivrières (manioc, arachide, riz, fruits et légumes), le développement d'un centre d'Appui Agricole pour un programme de recherche d'accompagnement et la diffusion des intrants : semences, petit matériel et produits vétérinaires. L'encadrement des agriculteurs volontaires sera du ressort des agents SEA (Service d'Extension Agraria). La commercialisation des produits vers la ville de Bata sera favorisée par la restauration des pistes de desserte (ponts). Le programme hydraulique villageoise comprend 17 forages avec pompes et répond surtout à un problème sanitaire. 4 dispensaires seront restaurés et 4 seront construits. Leur fonctionnement dépendra des services de santé. L'approvisionnement en médicaments est prévu. Le projet concerne environ 2 600 familles. L'assistance technique comprendra 2 expatriés permanents et des missions ponctuelles. Le coût total est estimé à 600 000 000 F.CFA sur 3 années. |
| Nature | NA | Littérature grise |
| Langue | LA | ESPAGNOL |
| Diffusion | DI | Consultable sur place. Côte : C12763. Adresse : 27, rue Louis Vicat 75015 PARIS. Heures d'ouverture : Lundi au Jeudi de 14h à 18h ; Vendredi de 14h à 17h |

**ATTENTION :** Les champs "Diffusion" et "Producteur" font partie du document mais ne sont pas interrogeables

**Question : PHILIPPINES.GE. ET (CRISE ÉCONOMIQUE.MA.)**

| | |
|---|---|
| NO | 18015. |
| PR | CCCE. |
| AN | 1986 |
| GE | PHILIPPINES. |
| TI | PHILIPPINES : PERSPECTIVES ÉCONOMIQUES. |
| OR | NORD SUD EXPORT. NUM 97. 86/02/28. - P. 27-34. |
| MA | ÉCONOMIE NATIONALE. CONJONCTURE. PERSPECTIVE. ACTIVITÉ ÉCONOMIQUE. POLITIQUE. POLITIQUE ÉCONOMIQUE. CRISE ÉCONOMIQUE. |
| RE | Au moment où se pose la question de l'après-MARCOS, il apparaît que l'économie des philippines est en complète régression, malgré certains résultats de façade, tels que le ralentissement de l'inflation, l'amélioration du taux de change ou la réduction de moitié du déficit budgétaire. En effet, l'agriculture est confrontée à des problèmes de productivité et de compétitivité (plantations de sucre et produits cacaotiers), tandis que le secteur industriel est en déliquescence complète. Enfin, les quelques résultats obtenus sur le plan financier n'ont pas rétabli la confiance et la mise en œuvre de l'austérité survient dans une situation politique explosive qu'il faut désormais rapidement dénouer. |
| NA | Périodique. |
| LA | FRANÇAIS. |
| DI | Diffusion de photocopies et de microfiches auprès du CNRS. |

## ASPECTS PRATIQUES

| | |
|---|---|
| **Nom d'accès** | IBIS |
| **Langage d'interrogation** | GCAM/BRS Standard |
| **Accès** | Minitel, Terminal classique, Micro-ordinateur |
| **Format réduit par Minitel** | GE, TI, OR, MA |
| **Tarification** | Sans droit d'entrée, ni abonnement, facturation mensuelle proportionnelle au temps de connexion selon tarif en vigueur |
| **Aides à la recherche** | Manuels et mémentos disponibles auprès de G.CAM Serveur. |
| **Accès aux documents primaires** | Selon la nature du document<br>– Auprès de GCAM AXITEL 62, rue Amelot 75015 PARIS. Préciser la côte du producteur, le titre, la demande de photocopies ou microfiches. Envoi du document à réception du paiement<br>– Auprès du C.N.R.S. 26, rue Boyer 75971 PARIS CEDEX 20 (1) 43.58.35.59 poste 547 pour la demande de formulaires de commande et vignettes de paiement. Indiquer IBISCUS en source de la référence |

Association (loi 1901)
"Réseau d'information sur les pays en développement IBISCUS"
1 bis, avenue de Villars – 75007 PARIS
☎ (1) 45.51.93.12

G.CAM Serveur
Tour Maine-Montparnasse
33, avenue du Maine
75015 Paris
☎ (1) 45.38.70.72

CONFERENCE ON WATER PUMPING/WATER LIFTING IN AFRICA

# OVERVIEW OF FAO'S ACTIVITIES IN AFRICA WITH REGARD TO WATER LIFTING

By : M. Sonou - FAO Regional Office for Africa

We very much appreciate the invitation the USAID has extended to us. Unfortunately, the smooth preparation of FAO's participation was hampered by communication problems between our Regional Office in Accra, Ghana and the USAID Office in Washington. However, we look forward to a closer cooperation in water pumping/water lifting activities in Africa.

While going through the documentation made available to us, you might have noticed two FAO publications: one entitled "Irrigation in Africa, South of the Sahara" and the other being an Irrigation and Drainage paper titled "Water Lifting Devices". Regarding the latter, FAO's interest dates back to the early fifties.

Last year, FAO organised an All African Consultation on Irrigation. Needless to say that technology constraints were, inter alia, discussed with particular reference to the viability of irrigation projects. A follow-up programme is being prepared.

The role of water pumping/water lifting in pumped irrigation management cannot be over-emphasized. In recognition of the particular situation of the Sahelian countries, an expert consultation on training in irrigation water management was organised for CILSS member countries in September 1985. One follow-up action to this meeting is the on-going regional project for the training trainers in irrigation water management in West Africa. Nine countries are covered. The project aims at training some 30 people during a one-month regional course to be held in Ouagadougou in October 1987. During national workshops scheduled for November - December 1987, the former trainees will train irrigation extensionists, water bailiffs and farmers.

The project is being implemented with the collaboration of CILSS, EIER(1) and CIEH(2) which are sub-regional IGOs.

A second phase is under discussion and will last at least three years if funds can be made available. The objectives are as follows:

i) to promote regional cooperation in the national programmes for better irrigation management.

ii) to carry out case studies and an evaluation of factors and constraints to better irrigation management, both technical and social/institutional.

---

(1) Ecole Inter Etat d' Ingénieurs de l'Equipement Rural
Inter-State School for Rural Engineers

(2) Comité Inter-Africain d'Etudes Hydrauliques
Inter-African Committee for Hydraulic Studies

iii) to strengthen national training institutes in carrying out irrigation management training.

iv) to assist on a regional basis in the preparation of training materials.

Dealing especially with water lifting devices, a TCDC project has been proposed. It aims at:

i) promoting technical cooperation between China and selected African countries. To this end, a study tour to China will be organised for 6 West and Central African Specialists of Water Lifting devices, a workshop for 17 countries will be organised in West Africa with the participation of Chinese Specialists.

ii) promoting the development of simple and economic water lifting devices through formulation and implementation of relevant projects at regional and national levels.

It is expected that the first phase of the project will be funded by the FAO Technical Cooperation Programme.

It is worthy mentioning that FAO has been assisting individual countries in the field of water pumping. In 1986, a national workshop on pumping stations was organised in Morocco, and pump operators were trained in Mauritania, to name only two.

CONFERENCE ON IMPROVED WATER PUMPING/WATER LIFTING

DATE: APRIL 5TH - 10TH, 1987

VENUE: GABORONE - BOTSWANA

# TOPIC: PROBLEMS AND POTENTIAL SOLUTIONS RELATED TO IMPROVED WATER PUMPING/WATER LIFTING IN SWAZILAND

PREPARED BY:

JEREMIAH B. MAGAGULA
MINISTRY OF NATURAL RESOURCES
DEPARTMENT: RURAL WATER SUPPLY BOARD
P.O. BOX 961,
MBABANE
SWAZILAND

# PROBLEMS AND POTENTIAL SOLUTIONS RELATED TO IMPROVED WATER PUMPING/WATER LIFTING IN SWAZILAND

CONTENTS:


- GENERAL INFORMATION
- INTRODUCTION
- DIESEL GENERATORS AND DIESEL ENGINES
- ELECTRICAL PUMPS (SUBMERSIBLE)
- HAND PUMPS
- HYDRAULIC RAM PUMPS
- WIND MILLS
- SUMMARY

## B. PROBLEMS AND POTENTIAL SOLUTIONS RELATED TO IMPROVE WATER PUMPING/WATER LIFTING IN SWAZILAND.

### GENERAL INFORMATION:

The Rural Water Supply Board (RWSB) in Swaziland was formed on August 1979. It was deemed to constitute the nation action group for the United Nations (U.N.) Water Supply and Sanitation Decade 1980-1990. Prior to 1979 the Rural Water Supply Board was under the guidance and support of the Water and Sewerage Board (WSB).

The purpose of the Rural Water Supply program is to design, construct and maintain its own rural water supply systems. On top of its own water projects it provides technical comments and assistance on the design, construction and different pumps installation for other agencies to ensure compliance with water quality guidelines and standardization of equipment utilized for the ease of spare parts.

The main objectives of the Rural Water Supply Board in Swaziland mainly are:

i) To provide and supply potable water to needy rural communities.
ii) To encourage the participation of local communities in construction, operating, monitoring and maintaining their own water supply projects.
iii) To improve the life quality of all rural communities.

INTRODUCTION:

There is a growing awareness of clean, good quality water in many rural communties in Swaziland and most of the people now appreciate the installation of pumps although we still have those who believe that water is a gift of life and they refuse to pay for it then in such conditions we have to educate the people and convince them that they are not paying for water but the equipment which has lifted the water and the deliver services.

In Swaziland the general public take handpumps, windmills, gravity feed systems and hydraulic ram pumps as systems to operate free of charge thus for getting that they will need to be maintained or have some parts fixed due to wearness.

The social harbits play an important role in the rural communities in Swaziland like it is women's task to fetch water regardless of how far is the source and it is the men who has the family money and so the paying for water services sometimes ends in jeopardy.

In Swaziland the types of pumps mainly used are:

- The electric pumps, for boreholes we preferable use submersible pumps.
- Diesel generator sets in remote places where there is no electricity.
- Diesel engines for small communities.
- Handpumps mainly on deep boreholes and its ideal for rural set ups.
- Hydraulic ram pumps
- Animal driven pumps
- Windmills

* EXCHANGE RATE E2.00 = US$1.00

## 1) DIESEL GENERATOR SET AND DIESEL ENGINES

Diesel engines are installed in places where electricity is not available at all or where it would be expensive to bring it closer to where needed. The proplems that we encounter in these diesel engines are:

a) To operate a diesel engine efficiently you need skilled personnel. Rural Water Supply Board in Swaziland does not employ engine operators or pump attendants for the communities and so if we are to install diesel engines every place where we have a project we would be forced to train almost all the engine operators because the only maintenance crew in our department can not cope with the number.

   Fortunately most of the engine mechanics found in the rural communities understand diesel engines and so they are of great help to the communities in doing minor repairs and they are the pump operators in many cases, with the basic knowledge they have on diesel engines they can check if the oil level is not below the required mark or make sure that they have checked everything before the engine is started.

   Otherwise the most important thing if you have to reduce problems in operating diesel engines is to have a person who is qualified or an expert in diesel engines installation as this is one of the factors which contributes a lot in the life and performance of the engine; from poor installation you should expect the major problems like excessive vibrations, engine seizure, cranked crank cases, blown cylinder head gaskets and difficult in starting.

b) The day to day rise in the cost of fuel also causes problems in the rural communities in such a way that they fail to buy the diesel for running the engine and some of them stay without water until they are faced with tough problems if its on the drought striken areas they would start contributing again when their natural sources are dry.

c) Diesel engines are in great demand to the public in Swaziland especially for the farmers to irrigate their farms. And so each time we install a diesel engine and pump we should consider this problem. This can be a big problem if you were to think of buying a new engine to replace a stolen one after all the attempts of retreaving it had failed.

The possible solution to this problem could be to have a mobile engine although that will also be determined by the size. You can construct a pumphouse and have thief proof if affordable.

The cost estimate for a diesel generator set is E30,000 and the cost estimate for a typical diesel engine is E8,000.

2) <u>ELECTRICAL PUMPS</u>: (SUBMERSIBLE PUMPS)

The few problems that exist with these pumps are usually electrical ones not mechanical problems.

Capital cost for electrical pumps are much higher. For electrical pumps installations you should have highly qualified personnel or expertise.

Once installed electrical pumps can be very easy to operate because they can be automatic; working independently with no full time operator. It can not be good for some communities because of the after use arreas.

Running of an electrical pump is much cheaper than a diesel engine. Presently there is no case where it had been stolen. The major problems encountered with submersible pumps in general are:

a) Not having power adequately or at all times and to avoid any inconviniency which is caused by this problem is to protect the pump from abnormal voltages and current fluctuation

b) The pump motor and impellers get grounded by silt when is running this is mainly found in boreholes drilled on soft rock like sand stones. This problem could be alleviated by using the correctly sized screens and casings or the fixing of strainers on the pump.

c) In the lowveld of Swaziland where the only reliable sources of water are deep boreholes the water is saline and it can attack the galvanized steel pipe used for rising pipe (corrosion) this could reduce the flow due to leaks or scale accumulate inside the pipe minimizing the internal bore solution to this could be the use of plastic pipe although it has posed some problems too, problems like the starting torque if its a deep borehole.

d) Submersible pumps can be damaged by borehole being over pumped if such a problem arises you just have to reduce the rate of withdrawing the water or the pumping rate.

e) Electrical pumps have a tendency of instant reverse in rotation even if it had been operating thats why the foot valve is a neccessity.

f) These pumps can be damaged by lightning in summer months or when ever there are storms to protect it the manufactures always insist on having the control box and the motor to have built in lightning arrestors correctly earthed.

Fortunately we have the submersible borehole pumps manufactured in Swaziland and so to maintain them is easy because there is no problem about spare parts.

The cost estimate for a typical submersible pump is E5,000.

3) <u>HANDPUMPS</u>

Handpumps are also widely used as water lifting devices in Swaziland handpumps are ideal for rural settled communities (homesteads settled in groups) with homeless stretches in between to make piped systems expensive.

Handpumps can be maintained at village level.

The capital investments in handpumps is high.

The power or energy requirements can be met from within the users or individual muscle.

Some of the problems related to handpumps are:

a) Some of the the handpumps have a poor quality materials from the manufacture.

b) Easily worn out if under severe use conditions thats typical in the lowveld where you could find 100 homesteads or 170 people on one handpump.

c) Limited capital for the purchasing of all different types of handpumps for testing and comparing results to see which one is more reliable.

d) All the handpumps installed in Swaziland are manufactured out side the country and so availability of spare parts are not readily available.

e) Most of the boreholes where handpumps are recommended produce low yields yet they are deep.

f) In the rural communities of Swaziland where they have to contribute towards the maintainance of their pump collection of contributions has been a difficult thing to get because they think that a handpump is a free energy and free operating pump.

g) Borehole handpumps at times serve a limited coverage due to Geological findings that is the confirmed suitable location of the borehole in relation with the communities to benefit from it being too far. The cost estimate for a South African manufactured handpump is E4,000.

4) HYDRAULIC RAM PUMPS

The hydraulic ram pump needs no external source of energy or power, it utilizes the energy contained in a flow of water running through it to lift a small volume of water to a

higher level. The phenomenon involved is that of pressure surge which develops when a moving mass of water is suddenly stopped. This pump is also considered as a free operating pump.

Problems related to hydraulic ram pump are:

a) It needs a lot of water to operate as 80% of water is wasted.
b) It can be used on rivers and mountain streams because these sources always have more water than needed but the quality is always questionable and so treatment is needed.
c) Hydraulic ram pumps are expensive to buy
d) They require a steady and reliable source.
e) The specified working should be kept as specified
f) They work well on hilly or mountainous areas.
g) They can not be used for lifting water from boreholes or shallow wells.
h) Clogging or silt collected in the moving parts in the pump needs no expertise to clean.

The costs of ram pumps also varies with sizes but for a cost estimate we use E5,000.

5) WINDMILLS

The use of wind power for pumping water should be feasible if:

a) Winds of at least 2.5-3m/sec are present 60% or more of the time and that means a study should be carried out before you consider purchasing any.

b) The water source must be able to withstand continuous pumping without excessive draw down.

c) The storage to be built must be at least 3 times the required size to be able to serve even during periods of no winds. That means extra costs on storage.

Windmills are also known as free operating pumps yet the cost of maintaining them can be very high.

- They are unreliable types of pumps as they operate by winds which means no wind no water.

  Although we have modern windmills which are designed to ensure that they automatically turn into the wind when pumping, which are also equipped with a "pull out" system to automatically turn the wheel out of excessive winds which might damage the windmill the 'sails' or fan blades are designed that they should furl automatically to prevent the wheel from rotating too fast under high winds but you can experience problems with these automatics not engaged at times thus damaging the windmill. It is mainly this problem which had damaged a lot of windmills in Swaziland. Leading to a very few of them operating presently.

- The capital cost of windmills is very high.
- If installed for a community they will need a person who is mechanically minded.
- Windmills spare parts are difficult to get
- Under the varying wind speeds you need a full time operator.

  The cost estimate for a windmill is E10,000 with extra charges for the platform.

SUMMARY

With the growing awareness of the important role which protected springs, wells and boreholes equipped with pumps play in providing an adequate supply of safe water to the rural population in Swaziland. That means proper maintenance approaches should be done.

A borehole without a pump is of no use if it is out of order: The functioning of the whole unit is dependent on the pump. As each time it breaks down the community is exposed to the hazards of using unsafe water from other sources until the pump is put back in operation. When pumps are not kept operational this inevitably means that the benefits of protected sources can not be realized.

It is the belief of the rural communities that it is the duty of the government to develope their respective areas.

The Swaziland Government is responsible for the purchasing and major repairs to the pumps with the communities contributing for the running cost.

With all the pumps operating in Swaziland the successful ones are those where the felt needs came from the communities.

U.S.AID CONFERENCE ON WATER-PUMPING/WATER LIFTING IN AFRICA

GABERONE, BOTSWANA

APRIL 5-10, 1987

# PLANNING FOR RURAL WATER SUPPLY AND SANITATION IN SWAZILAND

## Approaches, Problems and Remedies

by

I.M.V. Ngwenya

Rural Water Supply Board

SWAZILAND.

TABLE OF CONTENTS


| | | PAGE |
|---|---|---|
| 1.0. | Planing in general | 1 |
| 1.1. | Planning of Water and Sanitation Sector in Swaziland | 1 |
| 2.0. | Community Participation | 2 |
| 3.0. | Planning | 2 |
| 4.0. | Implementation | 2 |
| 4.1. | Design | 2 |
| 4.2. | Construction | 3 |
| 5.0. | Operation and Maintenance | 3 |
| 6.0. | Problems Encoutered | 4 |
| 7.0. | Remedies | 4 |


135

## 1.0. PLANNING IN GENERAL

Planning is the most important exercise in the development of any programmes. At the planning stage goals and objectives need to be clearly defined also the National Policies and Strategies need to be addressed.

Programme planning needs a multidiciplinary approach so that all the parties concerned would derive maximum benefits. Properly planned programmes give general directions desired in the development of a programme . Besides giving general directions it helps donor agents in directing their efforts in well thought national programmes.

At the planning stage some considerations need to be given to the following:

- Policies and Strategies
- Manpower assessment and Training programmes
- Coordination of Activities
- Financial implications
- Management and Supervision
- Community and Government involvement
- Operation and Maintenance.

## 1.1. PLANNING OF WATER AND SANITATION SECTOR IN SWAZILAND.

The water and sanitation sector in Swaziland addresses coverage in Urban per-urban and rural areas. In this paper the coverage of the sector in rural areas will be addressed.

The rural water supply and sanitation programme responsible for the supply of potable water and proper sanitation in the rural areas is also responsible for the planning, design, construction and maintenance of its own rural water Supply systems.

## 2.0. COMMUNITY PARTICIPATION

Community participation is expected at all stages of the project. Participation of the community at all stages of the project means that the community is involved from the inception of the project and they are involved in planning, implementation, operation and maintenance of the project.

## 3.0. PLANNING

All of the water and sanitation projects are planned with the involvement of the community at all stages. In general the steps taken are as follows:-

- Community initiate requests for water and sanitation projects
- Community responsibilities are clearly outlined.
  - mainly community participation at all stages of the project.
  - sense of ownership developed
  - organize community to participate in the projects through constributions of unskilled labour and financial contributions where required.
- Community involvement in:-
  - source identification and selection
  - system selection
  - site investigation
  - Homesteads Survey
  - Technology selection
  - Defining the extent of the system.

## 4.0. IMPLEMENTATION (DESIGN, CONSTRUCTION)

### 4.1. DESIGN:

The design of water and sanitation projects is usually the duty of a technician. In most cases the community

has no involvement at this stage. However it saves a lot of time by involving the community in the selection of materials component to be used and the selection of technology.

This will involve:

- Types of materials
- Types of pumps, engines intended for use
- Assessment of the community understanding and familirisation with the intended components of the design system.
  Acceptance of the technology

## 4.2. CONSTRUCTION

The construction of water and sanitation projects provides considerable opportunities for community participation. However awareness needs to be created through meetings and discussions as to what are the objectives of the project and how will the community benefit from the completed project.

At this stage the community is expected to contribute in the form of unskilled labour especially in:

- excavation of trenches and tank sites and pits
- distribution of pipes
- backfilling
- collection of materials
- preparation of aprons, drains and soakaway pits
- construction of latrine superstructure

## 5.0. OPERATION AND MAINTENANCE

To assure continuos operation and satisfactory performance of water and sanitation facilities maintenance needs to be done.

The beneficiaries will be motivated to participate in the operation and maintenance of their project. However training is necessary to enable the community to operate and maintain their system.

In this regard the communities have to be organised and responsible water and sanitation committies be established to look after the operation and maintenance of the projects more especially be responsible for the collection of the operation and maintenance fund from the communities.

## 6.0. PROBLEMS ENCOUNTERED

There are many problems encoutered at all stages of the projects each problem must be solved as it arise in order to assure success of the project. Some of the problems are as follows:

- Water and Sanitation projects are well understood by the communities, however, immediate benefits are easily appreciated for water projects than sanitation projects.
- Due to energy crisis communities will always prefer systems with low operation costs such as gravity fed, windmill or ram pump systems over pumped systems.
- Traditional taboos play a major role and need some considerations.
- Seasonal activities (agricultural, religious and cultural activities)
- Financial difficulties
- Coordination of activities
- Chief's disputes and boundaries
- Collection of operation costs
- Level of service provided
- Community participation during construction
- Hygiene education

## 7.0. REMEDIES

Promotion campaign programmes need to be developed in order for water and sanitation projects to be a success. The campaign programmes should be aimed at solving some of the problems encountered.

The programmes should be designed for mass media, school programmes, health centres etc.

A lot of meetings need to be held to address all issues and making sure that all parties concerned know their responsibilities.

# HUMAN POWERED WATER PUMPING FOR IRRIGATION

Dan Jenkins
USAID/Abidjan
April, 1987

There are many areas in Africa typified by small holdings of good agricultural land in close proximity to surface or groundwater, and a good market for agricultural produce. Invariably, some form of human powered water lifting will have developed in these areas. The simplest systems may be a rope and calabash pulling from an unimproved dug well, or scooping from a short canal leading from a surface source. More sophisticated systems may be used, such as the shadouf, swing basket, etc. What you probably will not find are more modern systems based on better materials, engineering design and principles. Is there a place for improved human powered irrigation water lifting in development, or is it perpetuating poverty and subsistance agriculture? Have traditional systems evolved to approach the potential of efficient design? If so, efforts to introduce improvements based on technology, materials and manufacturing technique beyond the means at the village would be counterproductive and futile.

I believe there is a need to help farmers using manual lifting techniques and a large potential for increasing the areas that are typically irrigated using traditional systems. In Niger, there are perhaps 30,000 farmers irrigating small plots from shallow wells with shadoufs or buckets. The total land irrigated by these methods is estimated to be about 3,000 hectares. This may repr sent less than one fourth of the total irrigated land in Niger, but probably well over half of the farmers directly involved in irrigation. Improvements in these systems can have a major impact both on the livelihood of the farmers and national food production.

What about the potential to improve traditional systems? The absolute benchmark for evaluating output of a human powered device is the difference between the power or work potential of the operator and the delivered power measured in terms of water work.

Let's make the distinction between power and work. Work is the amount of energy it takes to do a job we want done. Power is the rate at which the work is done. For example it takes 9,800 newton-meters (7,233 foot-pounds) of work to lift or pump one cubic meter of water one meter high. The work is the same regardless of the time period required to lift the cubic meter of water. One watt of power is one newton-meter of work per second of time. Therefore, if we lift the cubic meter in one minute, 163 watts (0.22 horsepower) of power is required. This is assuming you have a perfect machine (100% efficient) to lift the water.

What is the work and power capacity of a person? This varies greatly between individuals. It also varies greatly with the duration of work. For example a healthy person can exert abut 750 watts (one horsepower) for a few seconds. This power potential drops fast with time. The same person can produce an average power output of about 75 watts (0.1 horsepower) for durations of six to eight hours.

Finally, power and work potential vary greatly with the muscles used and how the machine is adapted to the user. For example, a person can put out a horsepower using his legs to climb a flight of stairs, or pedaling a bicycle at 50 kilometers per hour for a short stretch. The same person would find it very difficult to climb a rope with his arms in place of using the stairs, or to make a bike go 50 kilometers per hour with a hand crank.

The power output that can be expected from an average healthy worker over long periods is about 75 watts. This is roughly equivalent to riding an upright bicycle 150 kilometers on a flat road, or climbing 3,000 vertical meters up a steep grade or stairs in one day.

In reality, workers tend to work in cycles of fifteen to thirty minutes with rests between. The result is that the actual power out put while working is somewhat greater than the average, and this is what should be used when considering the design the design of a human powered machine.

How much water could be pumped if we could couple an ideal machine to this available human power? Work is force times distance. Power is work expended per unit of time. A liter of water weighs 9.8 newtons (force). So power (P) to lift water is given by Power (P) = 9.8 Liters (L) Meters (M)/Seconds(S). Conversely, flow (L/S) = P/(9.8M). So an ideal pump coupled to an average person working at a fairly comfortable rate should deliver about 75/(9.8M) or 7.7/M liters per second, where M is the vertical lift in meters. This is not a bad standard to use in design or evaluation of a pump for irrigation. Efficiency or discharge is much less important when selecting a hand pump for domestic water supply.

I like to use the "ideal" pump concept to evaluate real pumps. You can see how far they fall short of being ideal. Also you can get a qualitative or quantitative idea of why and where it falls short, where energy losses are, and how much it might be improved. It gives you something to aim at. I believe a serious effort to make an efficient human powered pump for irrigation should result in something within 75% of the ideal.

Lets take a look at some of the important areas of idealizing a pump or water lifter. One of the most important questions is "does it match the human engine?" This is not a question of the internal efficiency of the pump, but whether or not it is designed to receive energy from the major muscles of the human engine. Stairs are an excellent human powered elevator. Climbing a rope is not. What does this tell us about pulling water with a rope or a shadouf? If we are going to come close to the ideal, a machine must be designed to extract energy from the legs, and/or both arms, shoulders and back.

Another important question is does the pump match the required lift. The power and speed output (watts and cycles per minute) available from the human engine is fixed within fairly narrow limits. Assuming a pump is well matched to this power and speed input, it can only be efficient in a fairly narrow range of vertical lift. Some pumps and lifters cover a wider range than others, but in general it can be stated that a machine well suited to lift water one meter will perform far below potential, or not at all, at six meters, and vice-versa.

So far we have looked at mismatching the pump or lifter with the human engine and required lift. Let's look at some possible energy losses. They can occur within the pump/lifter itself, or anywhere between the water source and end use.

Mechanical friction can be a significant loss in piston pumps. It occurs in bearings and pivots, but mostly in seals between piston and cylinder. Depending on materials, fits and geometry this friction is usually between five and fifteen percent of the input energy. The key is use of smooth cylinders and seal materials, and loose but good sealing fits.

Hydraulic losses occur throughout the pumping and conveyance system, from source to end use. For pumping systems critical areas are friction loss in suction and discharge pipes, and friction loss and leaking through valves. Friction loss in suction pipes may be doubly critical since pumps used in the suction mode have definite and critical upper limits of suction lift. Pulsating or unsteady flow greatly increases the hydraulic friction in a pump and pipe system. Pumps approaching steady flow are ideal. Otherwise, somewhat larger pipe and valves should be used to compensate for the increased losses. I would say that the total hydraulic losses in a well designed system should be on the order of ten percent.

What about usable lift? Any height that the pumping system outlet or discharge point is set above the delivery canal represents wasted energy. For example, assume we are pumping water from a river or well whose water level is two meters below the field to be irrigated. If the pump outlet is set at 2.5 meters above the river water level, 0.5/2, or 25% of the pumping energy is wasted. The lift should be made as small as possible to reach the field to be irrigated.

Lets use our idealized model to evaluate the two most common human powered irrigation water lifters in West Africa; the rope and bucket and shadouf. An average person pulling water with a rope and bucket from a three meter well will lift around 0.7 liters per second. This comes to about 20 watts of useful work output or water work; far short of our potential 75 watts. Using both arms to pull a rope up is not an ideal use of the human engine. Also, the operator is using energy to lift the rope and bucket as well as water. Another problem is that the worker will probably have to lift the bucket to some significant height above the canal to empty it. Sometimes a significant portion of the emptied water spills or leaks back into the well.

How about the shadouf? An average flow for three meters of lift is about 1.0 liters per second, or 30 watts. This is an improvement, but still far short of a possible 75 watts. One improvement of the shadouf is due to the counterweight neutralizing the weight of the rope and bucket. Also that pulling a rope down is probably easier than pulling a rope up.

There have been some attempts to design more efficient human powered pumps for irrigation. Notable among these are the Rower pump developed by the Menonite Central Committee, the treadle pump developed by World Church Service, and the diaphram pump, developed by the International Rice Research Institute (IRRI). The Rower pump uses arm, shoulder and back muscles in a rowing fashion. It can be made in a very simple workshop with PVC pipe, cast aluminum valves and piston, and steel piston rod. It is best adapted to use with shallow tubewells and can be adapted to lift from surface sources. It works entirely in the suction mode and works best with lifts between four and eight meters. Larger piston and cylinders can be adapted to lower lifts. The water work output of the Rower pump in its efficient lift range is about 45 watts for an average user. The Rower pump may approach an ideal mix of efficiency, simplicity, durability and low cost.

The IRRI bellows pump is designed for low lifts between one and two meters from surface sources to an adjacent field or canal. It has an advantage in being completely portable. The water work output for an average worker is on the order of fourty watts.

The treadle pump is made of PVC pipe and fittings, aluminum pistons and valves, steel piston rods and a wooden frame. The double leg action allows high discharge and efficiency in the design head range (three to six meters). It can be adapted to suction from a tubewell, or from a surface source to field thru a pressure delivery pipe. The water work output for an average user in the design head range is 60 or 70 watts. The largest constraint of the treadle pump may be relative complicated manufacture and higher cost.

The choice of using a traditional water lifter or improved pump, or selecting from within either group, is quite complex and goes far beyond technical aspects. Any indigenous system in operation has the great advantage of being known technologically, economically viable and socially acceptable. Before attempts are made to replace or modify a working system, the new technical package or innovation should be sufficiently tested in the area and demonstrated to give significant improvement. In irrigation, economics is all important, or the bottom line, as they say. Perhaps a treadle pump can be used to triple the area irrigated by the same man using a shadouf. Can he sell the extra produce to pay for the pump and still have some profit left over? If not, he is better off with the shadouf. Will he irrigate the same area in one third the time? If so, how will he pay for the modern pump? The answer to these questions lies mostly in on-farm trial and error research.

Any efforts to improve pumping systems and their efficiency should include an evaluation of the water use or irrigation efficiency in the

144

done by a pipe coupling beveled on the inside to form a cutting edge. The coupling is screwed to the bottom of the first piece of pipe (or drill stem). The scaffold is erected and a pit is filled with water with some clay or cow dung to form drilling mud. The first pipe section is stood vertically in the pit with the coupling on the bottom. The pipe is tied to a lever with a piece of chain or rope.

The lever (a two or three meter piece of steel pipe or wood) is horizontal about a meter off the ground and pivots on a rung of the scaffold or ladder. Two men lift the pipe up and down sharply with the lever. A third person stands on the scaffold with his hand over the top of the pipe to act as a flap valve. On the up stroke the top of the pipe is closed and the pipe draws up water from the pit or borehole. On the downstroke the pipe falls over the column of water/mud inside and air escapes. After a few strokes the drilling mud with cuttings is jetting out the top of the pipe with each down stroke, advancing the bore hole a centimeter or two.

When the first pipe section is in the ground another section is screwed on and drilling proceeds until the required depth is reached. The drill is then pulled out of the bore hole. The hydrostatic pressure of the drilling mud in the pit keeps loose sand from collapsing in the borehole.

If a larger diameter borehole is needed, a larger cutter made from a standard reducer is screwed on the pipe in place of the coupling. This is used to ream the original borehole to the required diameter. After the borehole is completed the screen and casing are lowered into place and the well is developed. The sludger method of drilling is like milking a cow, in that it appears difficult and awkward to the novice. However, with a little practice, a crew can put down wells up to 50 meters deep and 100 mm in diameter yielding as much as 15 liters per second. A good crew can construct three or four of the 63 mm x 12 meters wells per day using the sludger technique.

The most appropriate well casing and screen is locally available low pressure PVC pipe. For our case 63 millimeter outside diameter is about right, with six meters of pipe for casing and another six for screen. Screen is made by cutting slots in the PVC pipe with small diameter circular slitting saw blades or by hand with a hack saw. Several hacksaw blades can be ganged on a custom made frame separated by washers at the desired spacing to cut multiple slots. The slit width should be narrow enough to assure less than half of the aquifer material can pass through and the total open area should be enough so the flow velocity thru the slots is about 3 centimeters per second or less. Another option is to cut a fewer number of wider slits and cover the slotted pipe with a coarse woven synthetic fabric sock to prevent sand from entering.

After installation of casing and screen, the well must be developed to remove fine sand and silt from around the screen. It may prove necessary to bail this sand from the bottom of the screen if an excess is brought in during development. "Small Wells Manual" by the Agency for International Development is an excellent reference on all aspects of design, construction and development of the types of wells in question.

field. If it is found wanting, it should be upgraded to reap the benefits of the improved pump. The objective is to make the limited quantity of water go as far as possible with the means at hand. This is accomplished by minimizing channel losses, applying the water as uniformly as possible, and applying the right amount of depth of water when it is needed.

Channel losses are minimized by keeping them well packed and graded. If soil is sandy they can be lined with heavy clay to reduce seepage. Uniform applications are achieved by keeping basins level and small if they are used. Furrows should be short enough so it doesn't take water too much time to reach the end, and level enough so excess water doesn't flow out the tail end. Irrigating with the right depth and frequency can probably give the largest saving to most small farmers. Putting on too much water results in water percolating below the roots. Irrigating too frequently results in excessive evaporation and channel loss.

A pretty good way to estimate soil moisture is to make a steel rod probe eight or ten millimeters in diameter and a meter long with a Tee Handle. The rod will penetrate moist soil easily, but not dry soil. It can be used to estimate when a crop needs water, and how deep water has penetrated after irrigation. Surface soil will dry out in a few days after an irrigation, but the layers just beneath may hold moisture to meet crop needs for many days or even several weeks.

One last important issue in micro irrigatin regards appropriate well technology. The most promising areas for micro irrigation are where loam soils on the surface lie over extensive sand aquifers with a high water table. Traditional systems use a dug well penetrating into the top of the aquifer. These wells are labor intensive, must be re-dug as they cave in and/or the water table falls, and produce very small yield. They also cover a sizable portion of land with the excavated sand. Tubewells offer some distinct advantages. They can be used from year to year. The potential yield is much higher. They are more easily adapted to improved pumps. And over their usable life they should be cheaper given appropriate technology in materials and construction. Tubewell cannot be used with traditional water lifters.

The sludger method of well drilling is eminently appropriate for the pumps and wells described here. It is appropriate for alluvial aquifers (sand silt and clay) with a high water table, within four or five meters. The sludger method is the forerunner of the hydraulic percussion method. It is accomplished entirely with hand tools, makes use of locally available materials such as bamboo or wood for scaffolding, and is particularly suited to inaccessable areas where labor is plentiful and cheap. The method is thought to have originated in Bangladesh (formerly East Pakistan) where it is used extensively. The equipment needed consists of 50 mm outside diameter standard steel pipe and couplings, pipe wrenches, a two meter scaffold or ladder, and some pieces of rope or chain. The pipe is cut into three meter lengths and threaded at each end for standard couplings. The total length of pipe needed is determined by the depth of well required; 12 to 15 meters in this case. Drilling is

What is the most hectarage we could hope to irrigate using human power? Let's assume we have a good pumping system (75% efficiency), a good distribution system (75% efficient), and good irrigation scheduling. The amount of water that can be pumped varies inversely with the lift. There are two typical patterns for human powered irrigation. The first is one adult pumping with a second person directing water in the field. For this case we will assume 75 watts of power output for six net hours per day. The second case is two adults switching turns on the pump for 15 or 30 minute shifts. Here we will assume 100 watts output six net hours per day. We will assume no dependable rain, and a daily crop water requirement of five millimeters. This is typical of crops in cool season arid areas or humid tropics in Africa. The estimates are presented in Table 1 and Figure 1. Remember, these are optimum valves that should be aimed for, and probably not averages that will occur. Values will certainly be less during hot, dry weather or on sandy soil.

One can draw some conclusions from the trend of the data. First, the potential area decreases rapidly as the lift increases. As lifts approach six or eight meters, the feasability of human powered irrigation is certainly questionable.

A second conclusion is that most traditional systems irrigate one fourth to one half of the estimated potentials, indicating alot of room for improvement. Introduction of improved pumps, well technology and irrigation water management can have a significant impact on existing micro irrigators. It may provide a stepping stone to the required capital and technical expertise needed to buy and operate power pumps.

147

TABLE 1

| VERTICAL LIFT | DISCHARGE (75 WATTS) | IRRIGATION POTENTIAL | DISCHARGE (100 WATTS) | IRRIGATION POTENTIAL |
|---|---|---|---|---|
| 1 meter | 5.74 l/s | 1.86 hectare | 7.65 l/s | 2.48 hectare |
| 2 | 2.87 | 0.93 | 3.83 | 1.24 |
| 3 | 1.91 | 0.62 | 2.55 | 0.83 |
| 4 | 1.43 | 0.46 | 1.91 | 0.62 |
| 5 | 1.15 | 0.37 | 1.53 | 0.50 |
| 6 | 0.96 | 0.31 | 1.28 | 0.41 |
| 7 | 0.82 | 0.27 | 1.09 | 0.35 |
| 8 | 0.72 | 0.23 | 0.96 | 0.31 |

FIGURE 1
VERTICAL LIFT VS IRRIGATION POTENTIAL

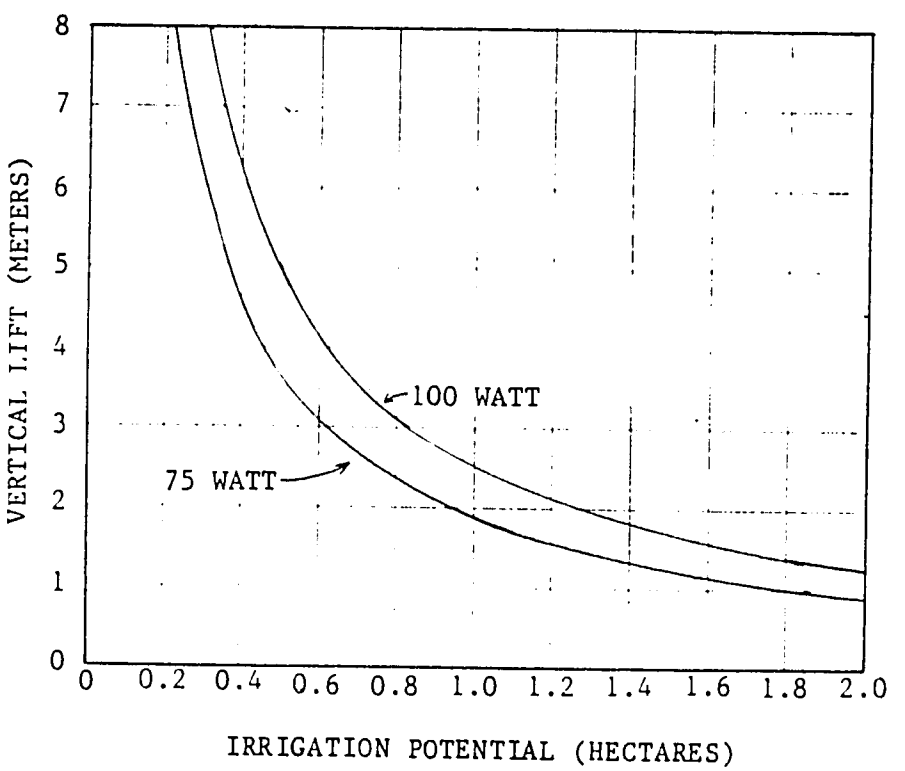


Assumptions:
1. One man pumping alone at 75 watts
2. Two men alternating at 100 watts
3. Pump Efficiency 75 percent
4. Irrigation application efficiency 75 percent
5. Six hours net per day pumping
6. Crop requirement 5.0 millimeters per day

# USAID UNIVERSAL TREADLE PUMP

# FOR HUMAN POWERED IRRIGATION

Dan Jenkins
USAID/Abidjan
December 1985

# USAID UNIVERSAL TREADLE PUMP
## FOR HUMAN POWERED IRRIGATION

There are many areas in the developing world which are typified by small holdings of good agricultural land in close proximity to surface or groundwater and a good market for agricultural produce. The step to irrigation with power pumps may be constrained by lack of capital, technology or social organization. In many cases, an intermediate step using human power to lift irrigation water may be appropriate. In order to help make this step USAID has developed the "Universal Treadle Pump".* The Universal Model is designed to pump water from a surface source through a pressure pipe to an adjacent field. The Shallow Tubewell Model is designed to draw water from a tubewell and discharge directly into a canal. They are designed for vertical lifts between two and eight meters. They may be driven by one or two people, have a non-fixed stroke length, and a built-in mechanical advantage matching the operator to the lift depending on where he stands on the treadles. The pump makes most efficient use of human power in lifts between four and six meters. Figure 1 gives approximate discharge/lift characteristics for one and two men (about 70 kg and in good health) operating the pump for period of 15-30 minutes. The pumps can be made in a small workshop with standard PVC pipe fittings, steel rods, cast aluminum or iron, sheet rubber or inner tube, leather piston cups and wood.

Plans for the pump with notes on design and manufacture are attached.

* The USAID Universal Treadle Pump incorporates many features of the Twin Treadle Pump developed in Bangladesh by Rangpur-Dinajpur Rehabilitation Service and adopted by International Rice Research Institute, Los Banos, Phillipines.

USAID UNIVERSAL TREADLE PUMP
FOR HUMAN POWERED IRRIGATION

## Technical Notes

1. Pump Body: The body is made from standard 110 mm PVC pipe elbows and tees, with PVC cylinders. There are several standards and weights of fittings. The lighter standards are generally strong enough and should be used for cost savings. Dimensions of pipe and fittings may vary with local standards from those shown in the plans, which must be adjusted accordingly. Critical dimensions are cylinder inside diameter and related piston parts, and the distance between cylinders and pulley diameter.

   It is not recommended to cement the joints in the pump body or pipe line so it may be taken apart for repair or replacement of valves. Joints on the suction side must be sealed air-tight. This may be done with a non-hardening joint compound like Permatex #2 and/or wrapping the male fittings with masking tape before joining. Joints on the pressure side of the pump body may leak a little, but must be clamped shut or they will work loose from the pressure and water hammer during operation. This may be done by metal banding or galvanized clamping straps.

   The internal PVC pipe couplings for the pump body fittings can be cut from pipe. The four couplings behind the check valves in the Universal Model should be faced on the ends and cut a millimeter long to assure a good seal and positive contact on the back of the valve plates. Otherwise the plates can become loose and move between the coupling and forward stops or step in the fitting.

2. Check Valves: Flap check and swing check options are given for the Univeral Model. It may be useful to try the two types by installing a pair of each type diagonally in a test pump to observe smoothness of operation and wear as well as cost and ease of manufacture.

   The metal plates may be made of cast aluminum, iron, brass or bronze. (In many areas) Aluminum casting is a cottage industry for manufacture of cooking pots, and is suitable for casting valve and piston parts if patterns are provided. It is recommended that all seats on the valve plates be turned in a lathe for trueing and smooth finish. The outer diameter must be turned for a good fit.

   Thickness of the metal plates may be reduced if metal strength and casting quality allow.



15.1

Friction loss through the valves is inversely proportional to the square of the area for a given flow. Figure 2 gives an approximation of the friction loss thru valves as a function of their open area. Since flow is thru two valves, actual loss is doubled. A design objective was to keep all valve openings above 25 square centimeters to minimize friction loss and wasted work. Friction loss can also be reduced significantly by tapering or rounding inlets as shown for the flap valves. Since castings must also be tapered (draft) in order to remove patterns from the sand, this can be used to reduce head loss and simplify manufacture.

Fastenings (bolts or rivets) on the valves should be non-corroding for long life. If rivets are used, aluminum is copper or brass is recommended. Brass screws may be used. If screws are used, ends should be peened over nuts for locking. Fastenings on the flap valve should be snug but not tight. Otherwise they will deform the flap. Flaps should be cut to assure they do not touch any internal steps or stops in the pipe fittings.

3. Pistons: Plates are made from cast metal. Cups are leather or neoprene. Cups may be purchased from Clayton Mark, 143 East Main, Lake Zurich, Illinois 60047. Cups may also be made locally. Clayton Mark manufactures excellent quality cups in a wide range of sizes. Care must be taken matching cup size to internal cylinder diameter.

The bleeder valve on the Universal Model serves the dual function of letting trapped air escape during priming and operation and maintaining a water seal above the pistons so no air can enter during suction. The floating rubber disc allows some water to escape to the top of the piston on the pressure stroke, but seals on the suction stroke. In order to allow enough flow to maintain a water seal without wasting excessive water, the bleeder hole should have an open area of three or four square millimeters. This can be achieved with a 1.5 mm or 1/16 inch drill. The upper surface around the bleeder hole must be smooth enough to assure a good seal on the flap..

The piston rod is threaded cold rolled steel (CRS). A cheaper alternative may be hot rolled steel which is stamped or welded for fastenings. The rope fastening may be a hook bent in the end.

Pulley/Frame: Made from good quality hardwood. Wood should be seasoned to prevent warping. Holes for pulley axle bearing and bolts should be drilled simultaneously or on an accurate jig to assure alignment.

Bearings should be packed with graphite or grease and ends covered to prevent grit entering. The axle surface may be smoothed with 400 grit emery paper before assembly to maximize life. Handle height may need to be modified to suit average size of users.

Treadles and Treadle Post: Made of good quality seasoned hardwood. The treadle post is bored for tight fitting pipe axle, and treadles are bored slightly larger for bearing fit. Spacers or pins may be put on the axle to hold treadles at proper center position. The post is buried in the ground. The groove in the treadles for the piston support may be cut to approximate dimensions with a chisel. The piston rod hole may be cut by drilling 12 mm holes and finishing with a chisel.

Pulley: Cut from hardwood and finished on a lathe. The axle hole is drilled undersize (11.5 mm or 29/64 inch) for press fit with 12 mm axle. Axle ends must be beveled before pressing into pulley. It may be necessary to use a steel hub to fasten the pulley to the axle if it works loose. The pulley can be fastened to the hub with wood screws, and the hub to the axle with a set screw.

Shallow Well Model: Body is made from PVC fittings with PVC pipe cylinders. Discharge is directly from cylinder tops so the pump body is buried in the top end of the distribution channel. The pump will self prime and operate up to about six or seven meters of suction. Piston and valve parts are cast metal with leather or neoprene cups. Valve seats are rubber, leather or nylon. The treadle support and rope tie are the same as the Universal Model and not shown in drawings. The piston cup clamp fastenings (rivets or screws) should be non-corroding. Screw ends should be peened onto nuts to lock.

Finishing: Painting wooden and steel parts (John Deere Green) is well worth the price for protection from rot and rust.

Installation: For proper operation and long life the pump and treadles should be installed reasonably leveled and well aligned. The rope must be tied to a length to assure proper positioning of pistons in the cylinders. Nylon rope has a tendency to slip and stretch so it may be necessary to tie several centimeters short initially. A rope clamp may be more practical than tieing.

For the Universal Model is it advanteageous to keep the pump near the source and do most of the conveying or lift on the pressure side. All pipe (suction and pressure) should be 58 mm (2.2 inch) inside diameter or larger. Elbows are well suited to connect suction and discharge pipe to the Universal Model because they can be turned to give any desired angle. Large radius elbows are preferred if available to minimize friction loss. A minimum pressure head of about one meter must be maintained for the bleeder valve to function properly.

The intake pipe should be fitted with a screen to assure debris does not enter the pump which could foul the check valves. The screen should have a net flow area of 40 square centimeters or more with hole sizes of 8 millimeter diameter or less.

The intake should be positioned at least 30 cm. above the bed of the source to be sure sand is not aspirated. Sand can foul the bleeder valve. If suspended sand is a problem the hole for the bleeder valve must be drilled over size to assure the sand can pass thru without embedding between the poppet and poppet hole.

The shallow Tubewell Model is designed for use with low-cost manually installed tubewells in shallow alluvial aquifers. Wells can be easily installed by the "slugger" method used in Bangladesh and South East Asia. Casing can be 60 mm PVC pipe or other suitable material. Screens can be made from perforated PVC pipe wrapped with synthetic fabric of the desired mesh.



154

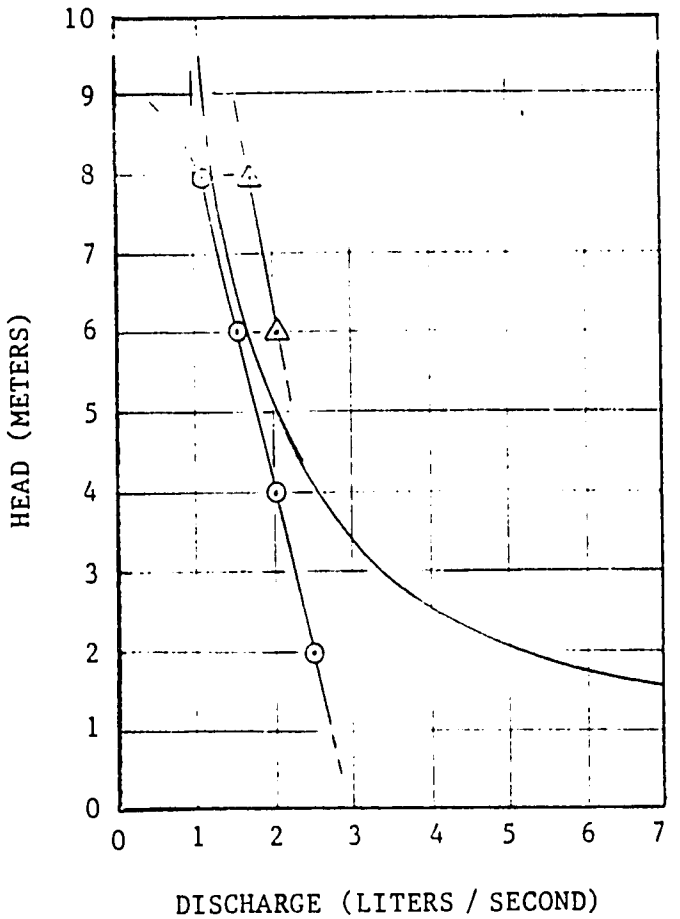


FIGURE 1

LIFT VERSUS APPROXIMATE DISCHARGE: UNIVERSAL TREADLE PUMP

100 WATTS

ONE OPERATOR

TWO OPERATORS

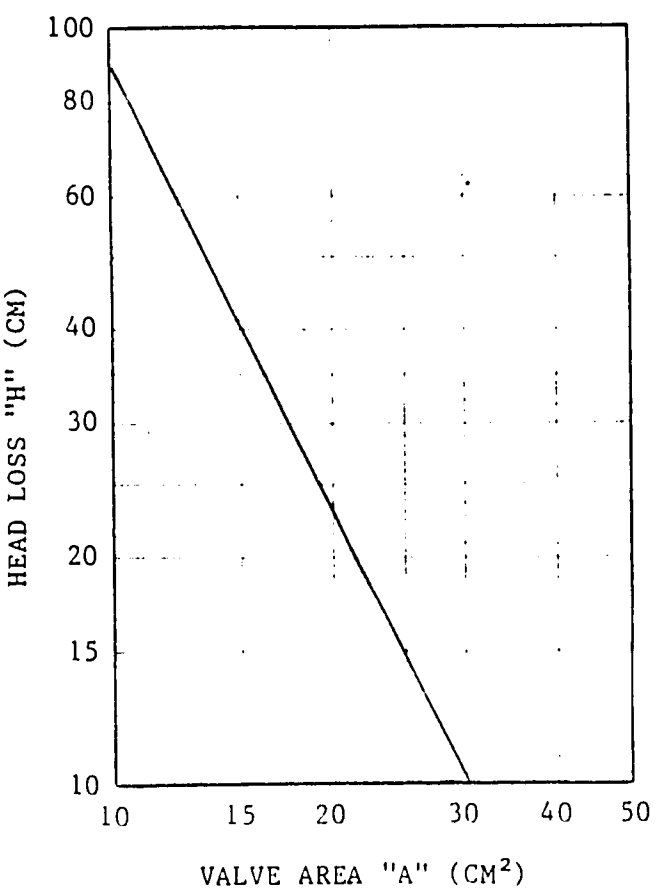


FIGURE 2

APPROXIMATE HEAD LOSS VERSUS VALVE OPENING (2.5 L/S DISCHARGE)

$(H = 8860/A^2)$

## MATERIALS LIST

## UNIVERSAL MODEL TREADLE PUMP

| PART | PIECES | MATERIAL | DIMENSION |
|---|---|---|---|
| **PUMP BODY** | | | |
| Pipe Tee | 4 | PVC | 110 mm dia |
| Pipe Elbow | 2 | PVC | 110 mm dia |
| Pipe Nipple | 4 | PVC | 110 mm dia x 50 mm |
| Pipe Reducer | 2 | PVC | 110 mm dia x 60 mm |
| Pipe Elbow | 2 | PVC | 63 mm dia |
| Cylinders | 2 | PVC | 100 mm dia x 360 mm |
| **VALVES** | | | |
| Valve Plate | 4 | Cast Metal | 110 mm dia x 10 mm |
| Valve Flap | 4 | Rubber Sheet | 95 mm dia x 3 mm |
| Valve Flap Screw | 8 | Brass | 4 mm dia x 18 mm |
| Valve Flap Nut | 8 | Brass | 4 mm |
| Metal Keeper | 4 | Aluminum/Brass | 15 mm x 80 mm x 1 mm |
| **PISTONS** | | | |
| Rod | 2 | Cold Rolled Steel | 12 mm dia x 440 mm |
| Piston Plates | 4 | Cast Metal | 90 mm dia x 10 mm |
| Piston Cups | 4 | Leather/Neoprene | 100 mm dia |
| Rivet | 2 | Aluminum/Copper | 3 mm dia x 15 mm |
| Rope Tie | 2 | Hot Rolled Steel | 25 mm x 100 mm x 3 mm |
| Nuts | 10 | Steel | 12 mm |
| Treadle Support | 2 | Steel Pipe | 27 mm dia x 60 mm |
| **PULLEY/FRAME** | | | |
| Pulley | 1 | Hardwood | 250 mm x 250 mm x 25 mm |
| Pulley Axle | 1 | Cold Rolled Steel | 12 mm dia x 110 mm |
| Washer/Spacer | 2 | Steel | 12 mm i.d. |
| Long Column | 1 | Hardwood | 40 mm x 80 mm x 1.6 m |
| Short Column | 1 | Hardwood | 40 mm x 80 mm x 090 m |
| Column Spacer | 1 | Hardwood | 30 mm x 50 mm x 80 mm |
| Column/Cylinder Spacer | 2 | Hardwood | 30 mm x 50 mm x 130 mm |
| Cylinder Side Clamp | 4 | Hardwood | 20 mm x 50 mm x 390 mm |
| Cylinder End Clamp | 4 | Hardwood | 20 mm x 50 mm x 110 mm |
| Wood Screws | 8 | Steel | 4 mm x 40 mm |
| Column Spacer Bolt | 1 | Threaded Steel Rod | 8 mm dia x 130 mm |
| Side Clamp Bolt | 2 | Threaded Steel Rod | 8 mm dia x 170 mm |
| Nuts | 6 | Steel | 8 mm |
| Flat Washers | 6 | Steel | 8 mm |
| Journal Cover | 2 | Sheet Metal | 40 mm x 40 mm x 1 mm |
| Journal Cover Nails | 8 | Steel | 1.5 mm dia x 5 mm |
| Handle | 1 | Steel Pipe | 21.3 mm dia x 400 mm |
| Rope | 1 | Braided Dacron | 10 mm dia x 1 meter |

## MATERIALS LIST

## UNIVERSAL MODEL TREADLE PUMP

| PART | PIECES | MATERIAL | DIMENSION |
|---|---|---|---|
| **TREADLES/POST** | | | |
| Post | 1 | Hardwood | 45 mm x 90 mm x 1 m |
| Treadles | 2 | Hardwood | 45 mm x 90 mm x 2 m |
| Pivot Axle | 1 | Steel Pipe | 21.3 mm dia x 360 mm |
| Keeper Washer | 2 | Steel | 23 mm i.d. x 2 mm |
| Keeper Pin | 2 | Steel Wire | 3 mm x 30 mm |

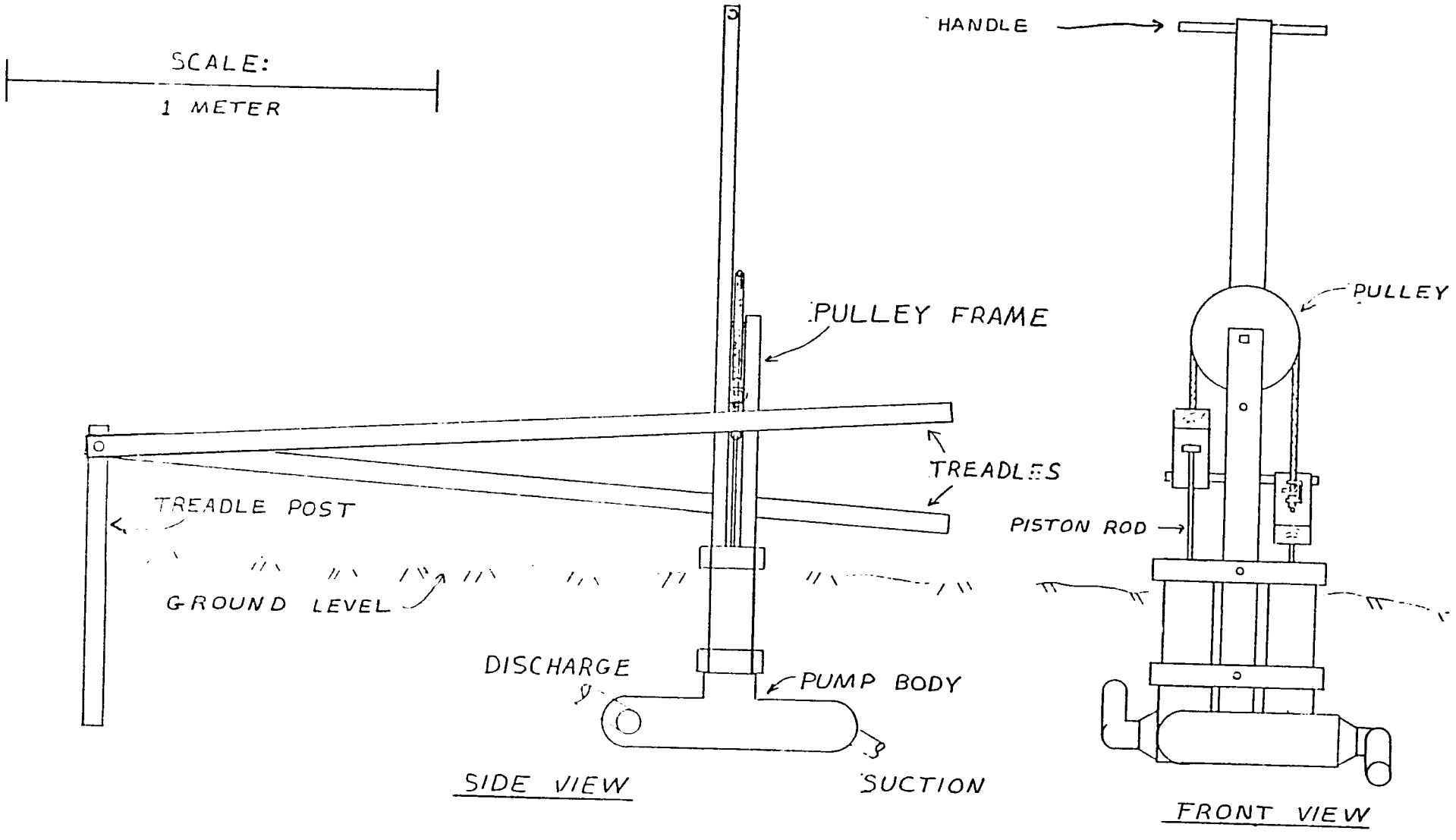


USAID UNIVERSAL TREADLE PUMP
FOR HUMAN POWERED IRRIGATION
SHEET 1 OF 11 (DEC 1985)

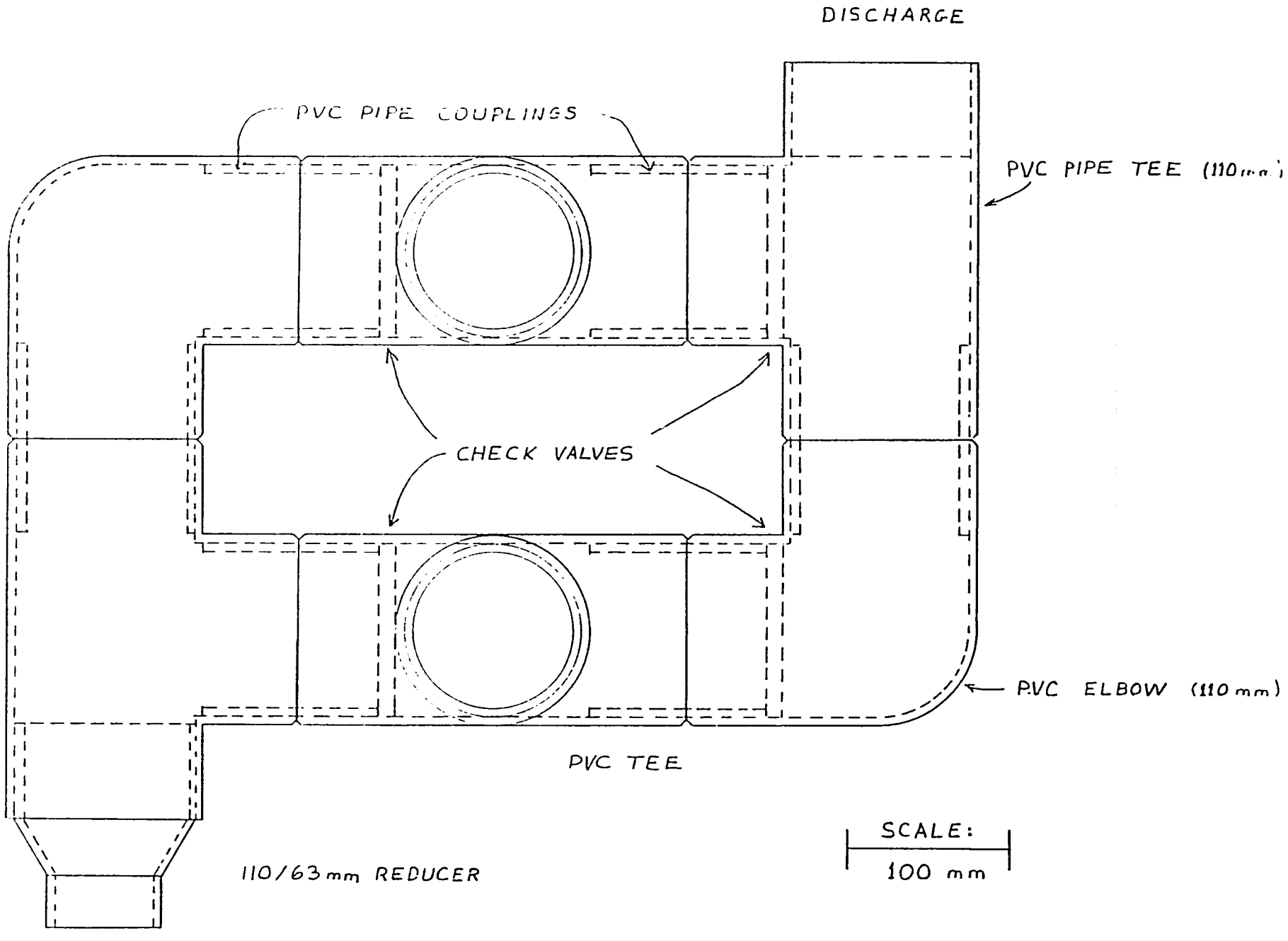


USAID UNIVERSAL TREADLE PUMP
PUMP BODY DETAIL (TOP VIEW)
SHEET 2 OF 11 (DWG. B4)

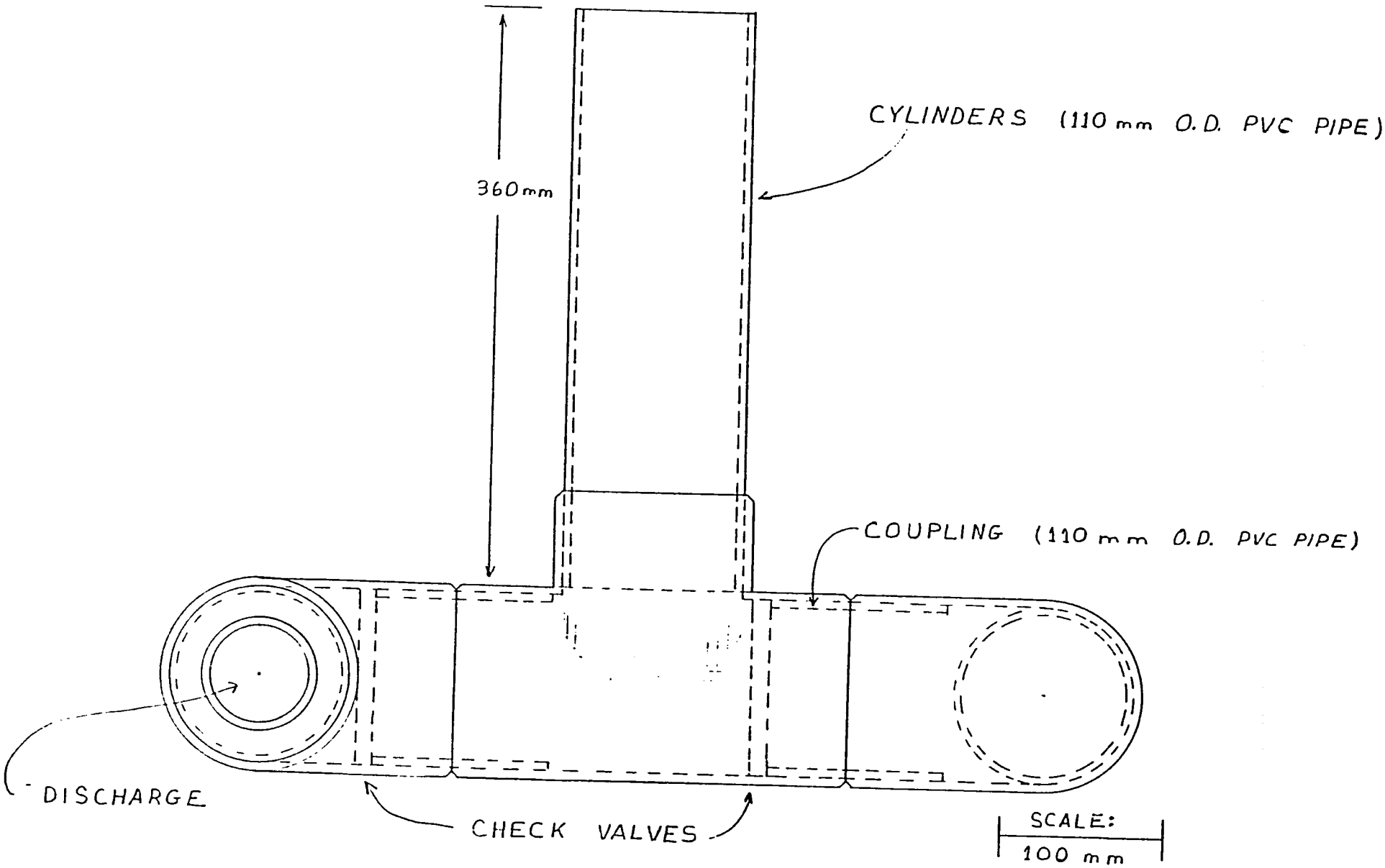


USAID UNIVERSAL TREADLE PUMP
PUMP BODY DETAIL (SIDE VIEW)
SHEET 3 OF 11 (DEC 85)

## FLAP CHECK (OPTION A)

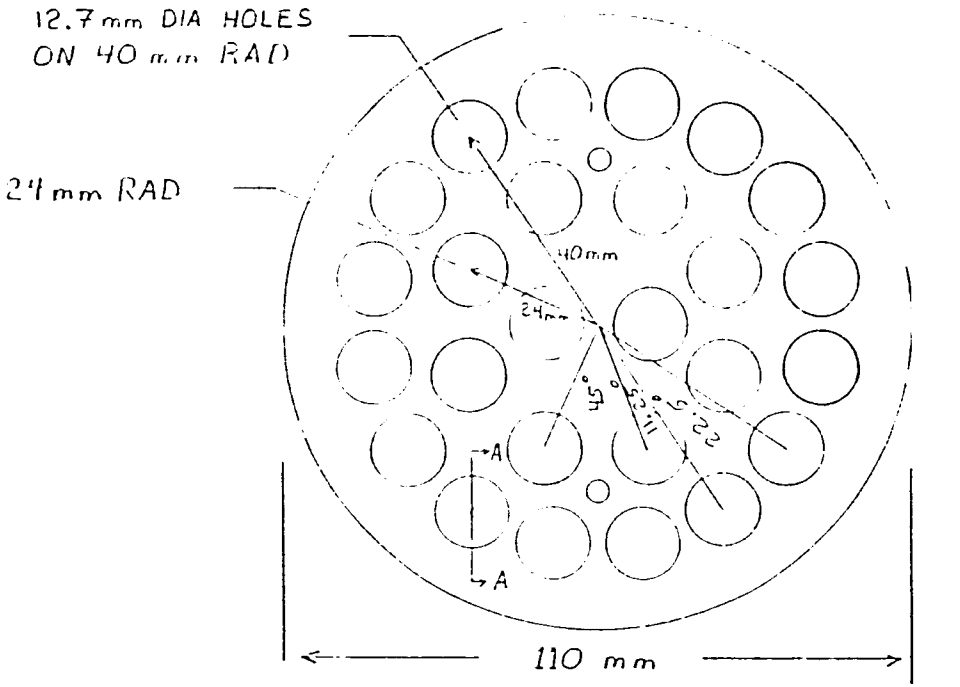


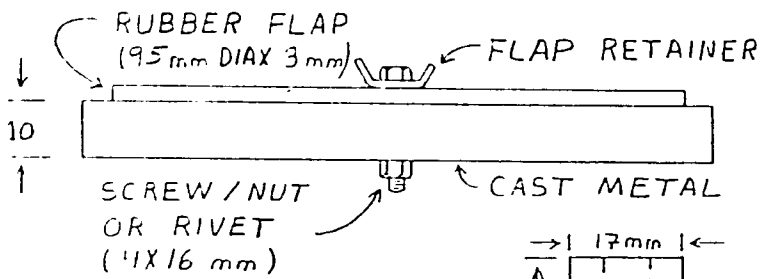


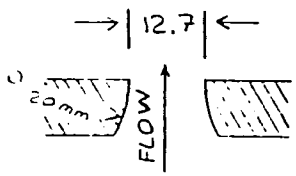


SECTION A-A
ORIFICE GEOMETRY

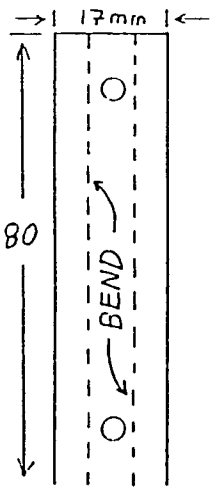


FLAP RETAINER
(NON CORROSIVE SHEET METAL)

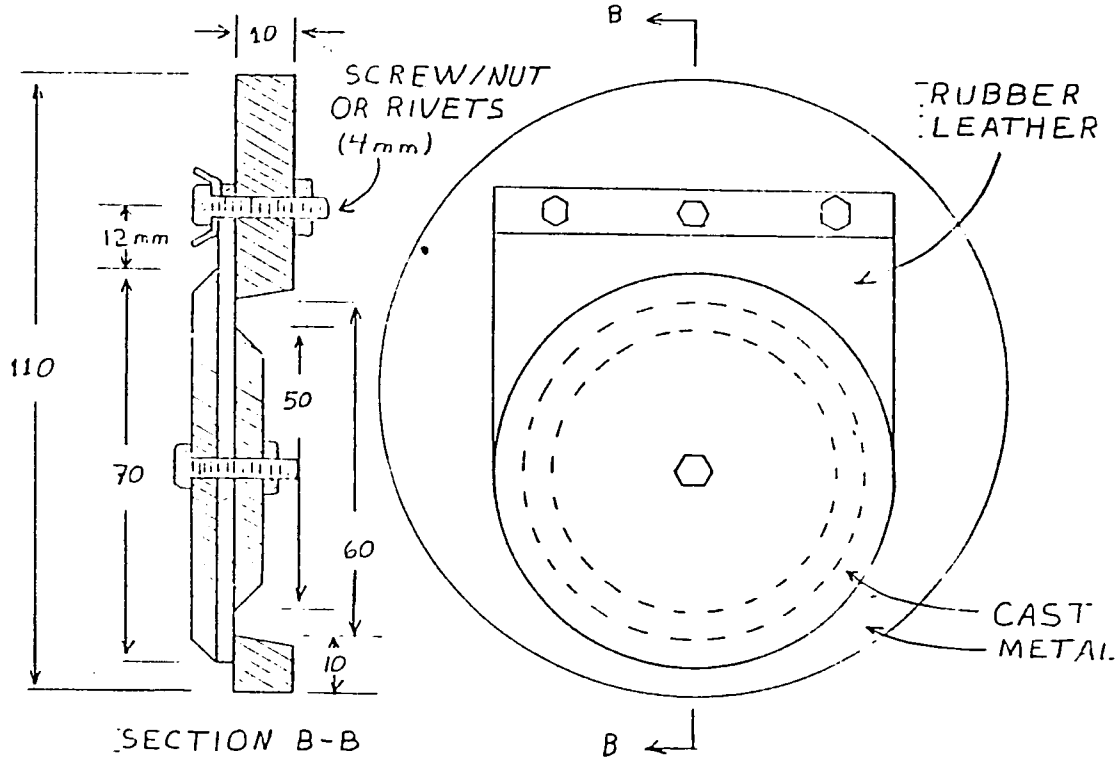


SECTION B-B

## SWING CHECK (OPTION B)

USAID UNIVERSAL TREADLE PUMP
CHECK VALVE DETAILS (OPTION A & B)

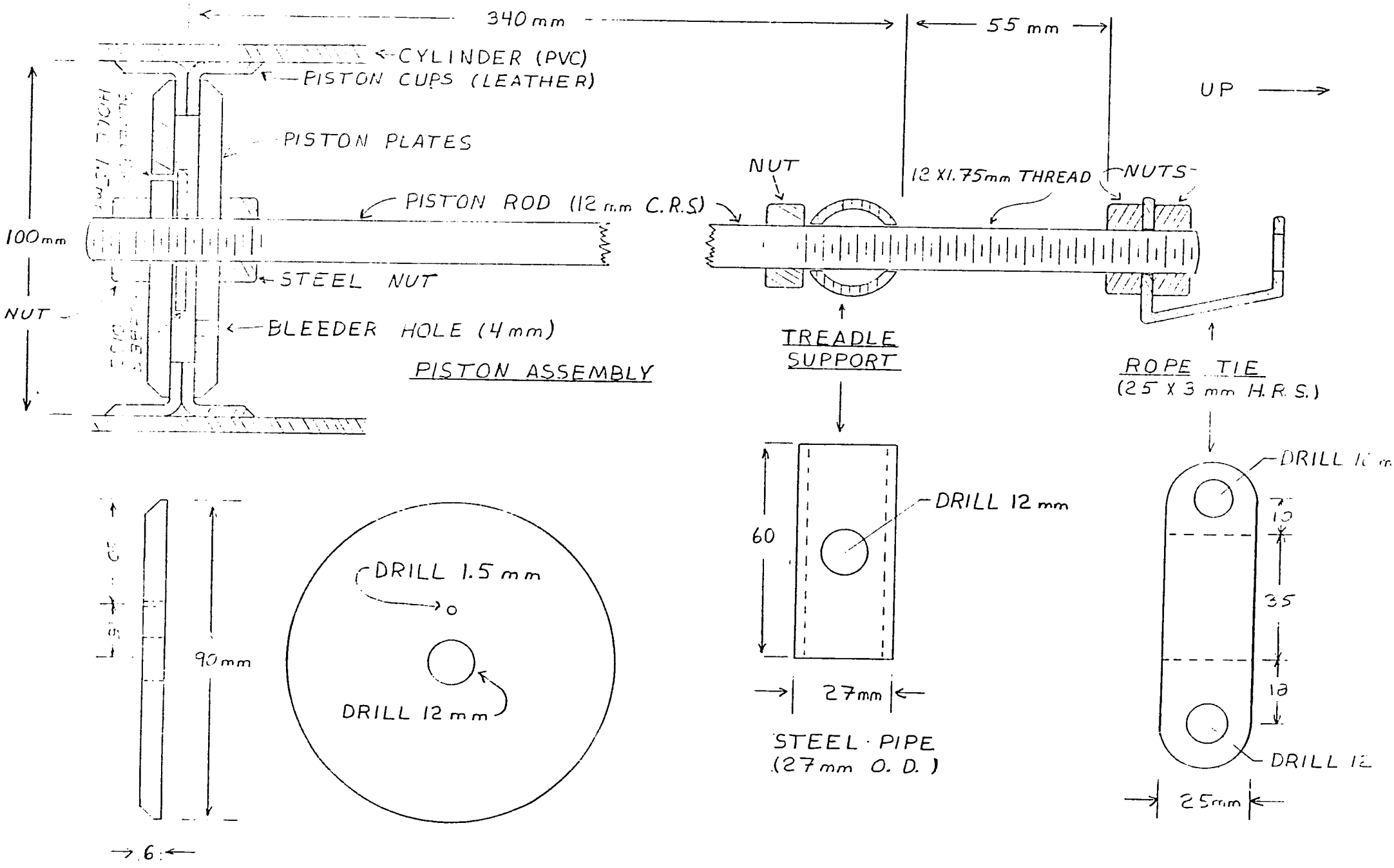


USAID UNIVERSAL TREADLE PUMP
PISTON DETAILS
SHEET 5 OF 11 (DEC 1985)

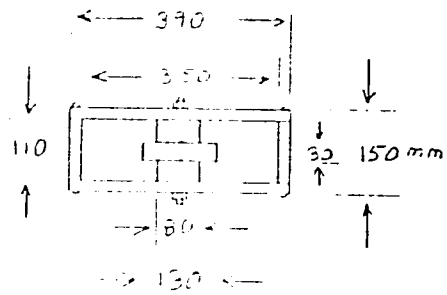


TOP VIEW
(PULLEY & HANDLE REMOVED)

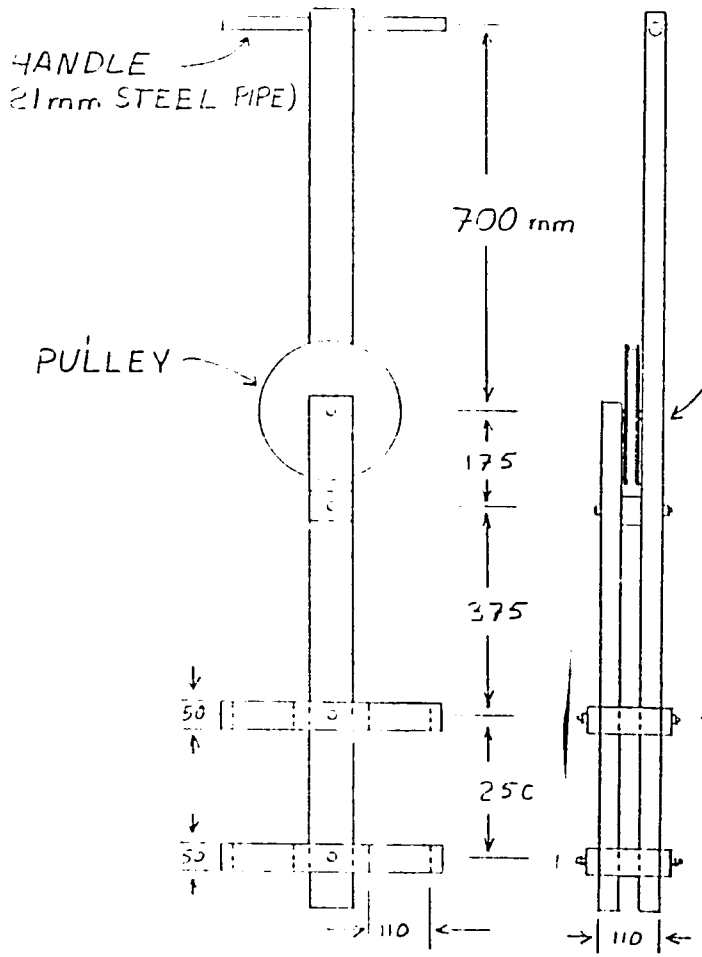


FRONT VIEW

SIDE VIEW

PULLEY AXLE BEARING DETAIL

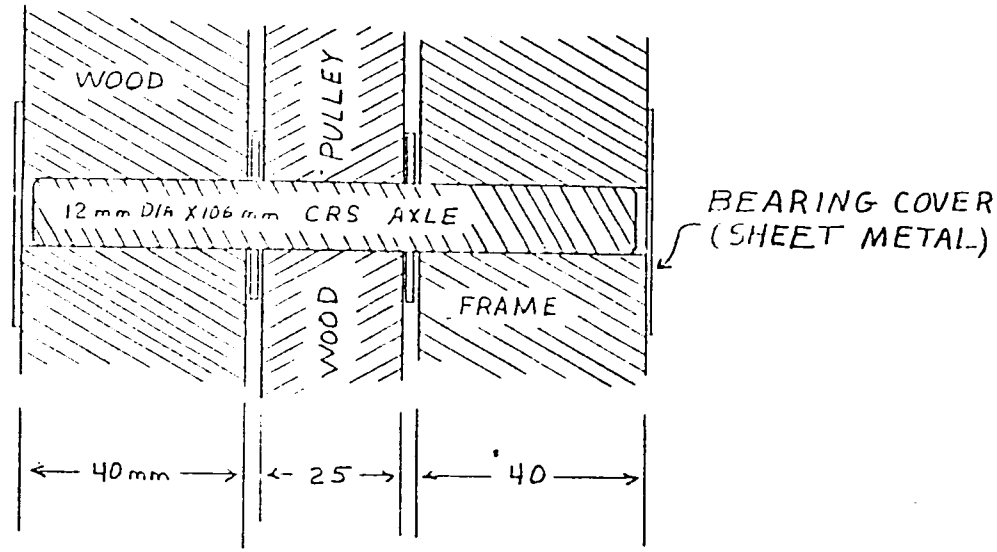


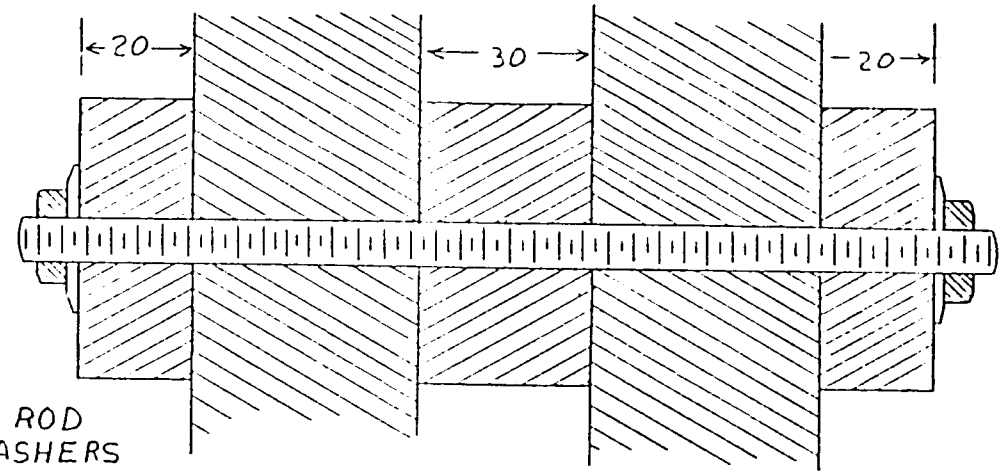


THREADED ROD
NUTS & WASHERS
(8 mm)

BOLT DETAIL

USAID UNIVERSAL TREADLE PUMP
PULLEY FRAME DETAILS
SHEET 6 OF 11 (DEC 85)

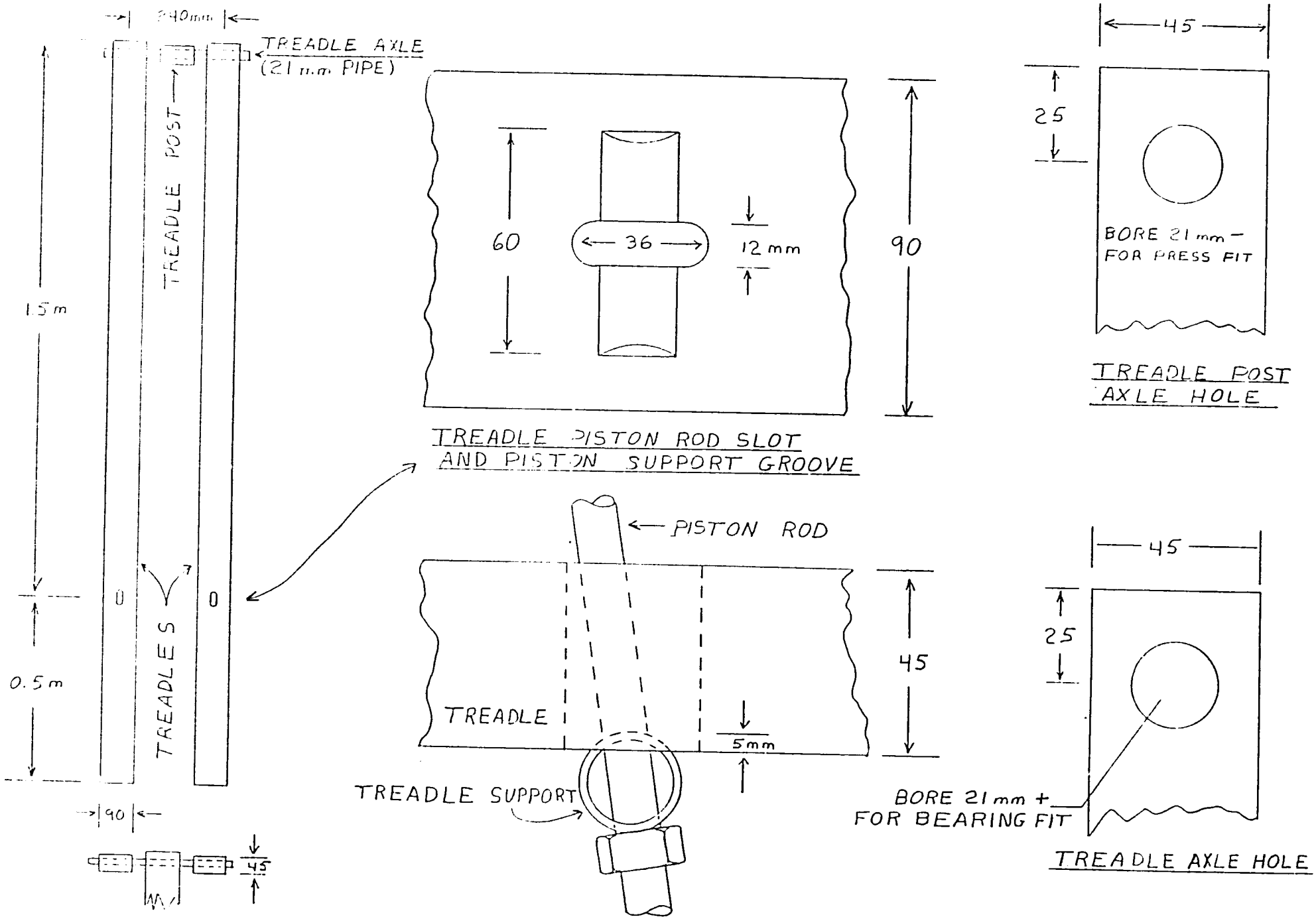


USAID UNIVERSAL TREADLE PUMP
TREADLE / POST DETAILS
SHEET 7 OF 11 (DEC 1985)

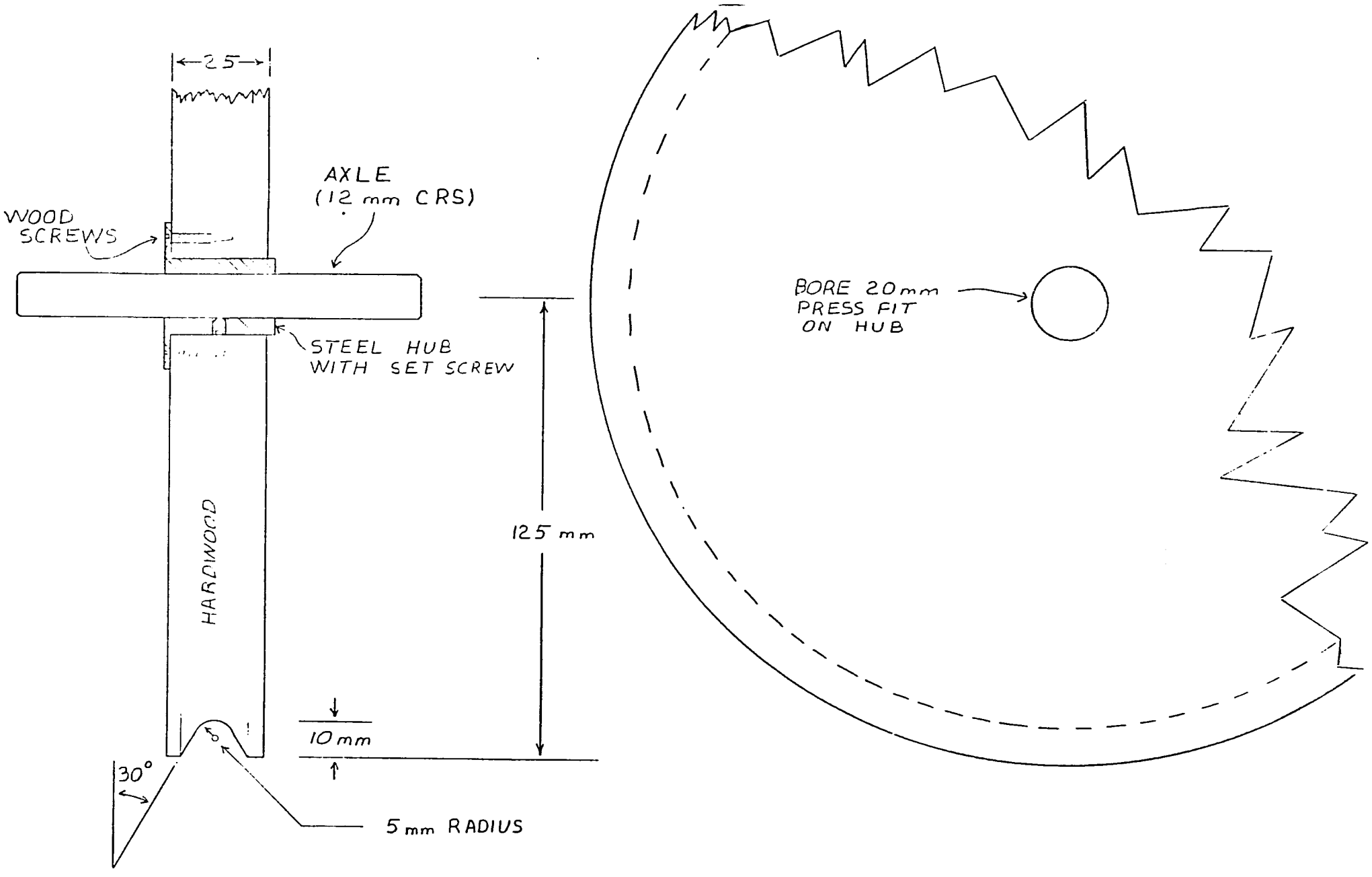


USAID UNIVERSAL TREADLE PUMP
PULLEY DETAILS
SHEET 8 OF 11 (DEC. 85)

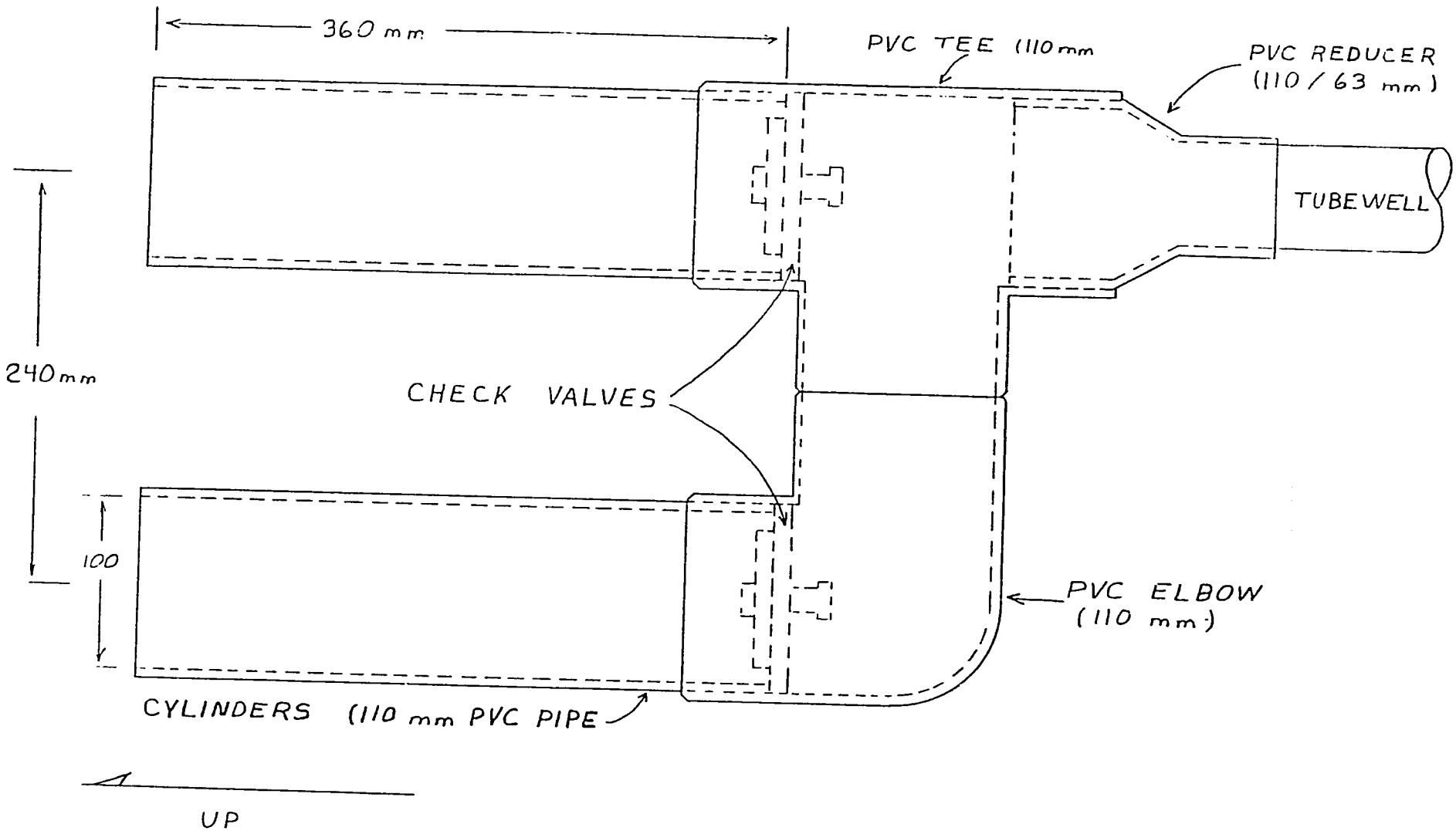


USAID UNIVERSAL TREADLE PUMP
SHALLOW TUBEWELL MODEL BODY
SHEET 9 OF 11 (DEC 1985)

165

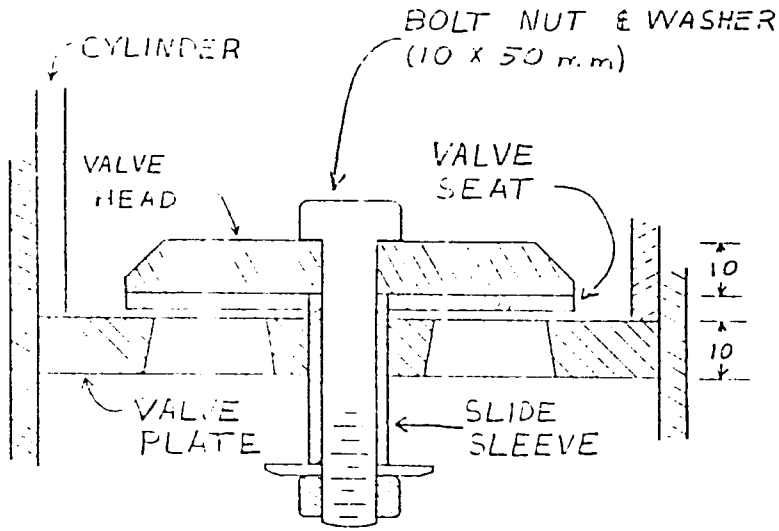


CHECK VALVE ASSEMBLY

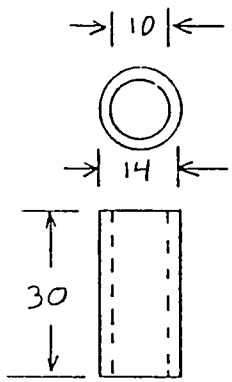


SLIDE SLEEVE
(14 mm STEEL PIPE)

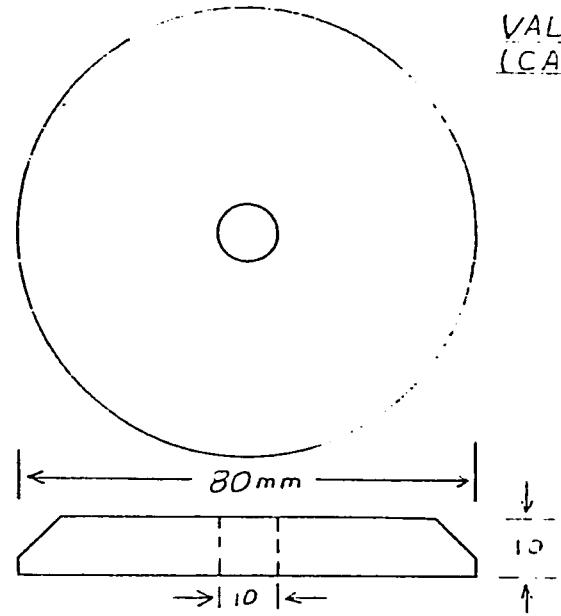


VALVE HEAD
(CAST METAL)

VALVE PLATE (CAST METAL)

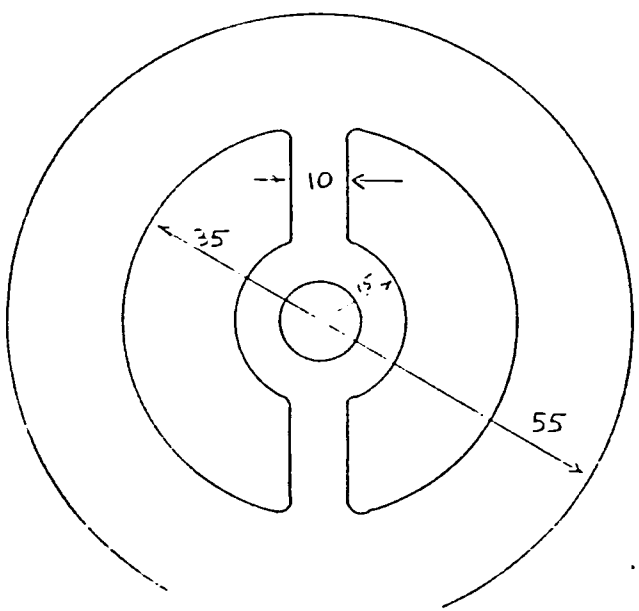


ORE
ENTER
OR SLIDE
IT ON
SLEEVE

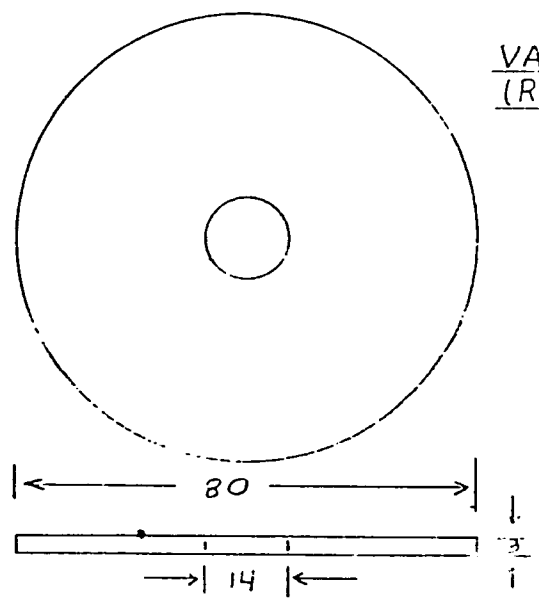


VALVE SEAT
(RUBBER/LEATHER)

USAID UNIVERSAL TREADLE PUMP, SHALLOW TUBEWELL
MODEL CHECK VALVE DETAILS

167

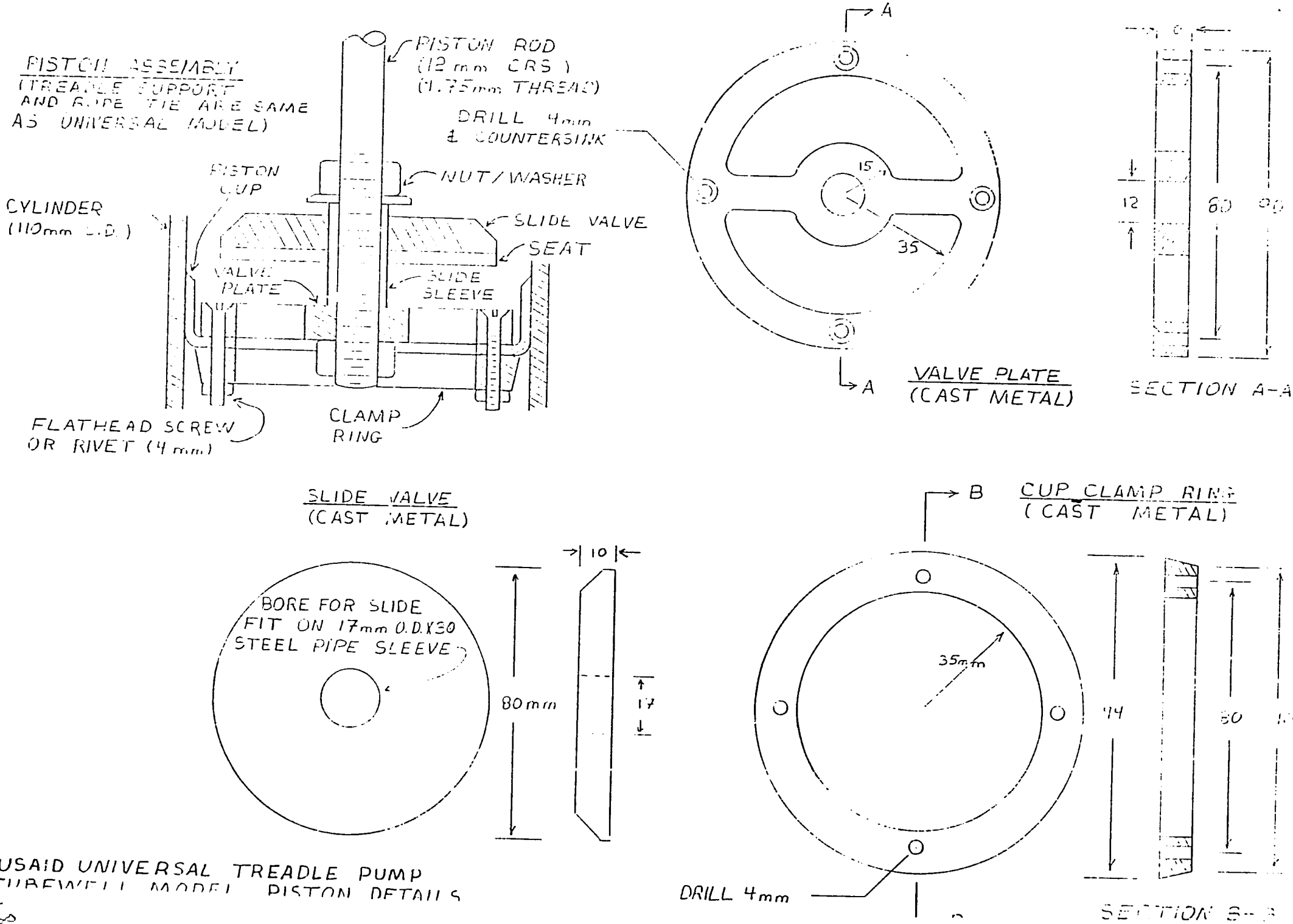


USAID UNIVERSAL TREADLE PUMP
TUBEWELL MODEL PISTON DETAILS

# COMPARISON OF PUMPING TECHNOLOGIES

# FOR VILLAGE WATER SUPPLIES

## A CASE STUDY OF DIESEL MOTOR PUMPS AND PHOTOVOLTAIC PUMPS UNDER HIGH HEAD CONDITIONS

SUBMITTED TO THE USAID-SPONSORED CONFERENCE
ON WATER PUMPING/WATER LIFTING
GABERONE, BOTSWANA

prepared by: Mike Godfrey
Engineer CARE/Rwanda
date: April 1987

## INTRODUCTION

CARE began a rural water supply program in Rwanda in January 1986. The goal of the project was to bring potable water supplies to an estimated population of 35,000 in the northeast region of the country. The area consists of rugged hills divided abruptly by deep valleys with altitudes ranging from 1,300 to 2,000 meters. The valley bottoms are characteristically very moist with permanent streams fed by runoff and springs along the flanks. These areas are generally cultivated or grazed with the homesteads occupying the flanks and summits of the hills. These factors allow a range of water supply options to be used, including spring capping and shallow wells. However, the focus of the program to date has been the provision of water via piped systems, usually gravity flow schemes. This method depends on locating springs at a higher elevation, often much higher given the distances involved, than the centers of population to be served.

The extreme differences in altitude between the water sources and the people has led to a reliance on mechanised pumping methods throughout the country. With the lack of a national electrical grid, the standard design has coupled a diesel motor to multi-stage centrifugal pumps. Pumping heads range anywhere from 50 to 300 meters. A brief review of the situation in Rwanda affords two particular conclusions about these systems. First, they require rigorous attention by a skilled technician to operate and maintain them; something that has proved difficult in the rural areas, especially with the lack of spare parts. More importantly, at 75 US cents per liter, the diesel fuel to operate the pumps raises the operational costs to near prohibitive levels where only private groups such as religious missions or rural-based companies have the means to operate them.

The counterpart ministry has asked CARE to examine alternatives to the diesel pumping option. One of the most promising methods seems to be coupling electric pumps to photovoltaic panels. These have been gaining in popularity as the price of the panels declines and as better pumps come on the market. So far, though, the applications have been limited to water supply or irrigation with low heads; usually lower than 30 meters. The purpose of this paper is to present a comparison of these two options under a much higher operating head (100 meters), centering on the economic analysis over a fifteen year period of operation.

## LOCAL CONDITIONS

The system under design is being considered for a small settlement atop one of the numerous hills in the project zone. The actual population of the community is around 500. However, the number of users can be increased to a number nearer to 2,500 by continuing the pipeline downslope through the homesteads neigboring the center. The water supply is several kilometers away and approximately 80 meters below the center. Plans call for accumulating water in a supply reservoir, lifting it 100 meters (total dynamic head) and then storing it in a distribution reservoir. Water will then move by gravity force through the system.

The project received various pro formas for supply of a pumping system and the most favorable for each technology was used in the economic analysis. A PV pumping system offered by ARCO Solar includes panels, pump and controls for $11,000. There would be 28 panels supplying 1500 watts maximum power coupled to a Grundfos SP1-28 submersible pump. The pump was designed for lifts of 90-120 meters and flow rates of 6-9 cubic meters per day. A diesel motor pumping system was offered by LOEWE Pumpenfabrik GMBH of West Germany. The system is comprised of a six stage centrifugal pump at a cost of $2,000 and an 8 HP four-stroke diesel engine priced at $2,250. This system would supply water under the same head at the rate of 10 $m^3$/hour.

The analysis began with the following assumptions:

1. The per capita consumption was 15 liters/day (double the actual statistic in the zone).

2. The pumps would operate for 20,000 hours before replacement. This meant that the PV pump was replaced at year 10, while the diesel pump did not need replacement until year 16 which was beyond the range of the analysis. All other lifetimes are listed in Appendix 1.

3. The values for components are based on locally available materials and prevailing wages. These were then converted into US dollars.

4. Because increasing the flow of the PV system meant adding an additional unit, the analysis was conducted in increments of supply of 7 $m^3$/day up to a maximum of 35.

## METHOD OF ANALYSIS

The methods used to examine the economic aspects of the two pumping technologies are based on those recommended by Kenna and Gillet in their review of solar water pumping.[1] The focus is on the Life Cycle Costs (LCC) over a specified period. The LCC establishes the present worth of all current and future costs for either of the two technologies. These can be grouped basically as follows:

Capital costs (construcion and equipment)
Recurrent costs (operation, maintenance, and replacement)

Having fixed these for the life of the project, the analysis provides a direct comparison of each system via

-its life cycle costs, and
-the unit cost of water provided by each.

The entire analytic procedure, economic as well as technical considerations, was adapted for use in LOTUS 1-2-3™. The spreadsheet was formatted for easy entry of the different variables and for quick storage and recall of the intermediate results. This permitted numerous recalculations with little effort and was particularly useful in allowing immediate viewing of the results through its graphing subroutine.

[1] Solar Water Pumping: A Handbook, Jeff Kenna and Bill Gillett, Intermediate Technology Publications, London, 1985.

The table in Appendix 1 presents the basic variables as they were established for each pumping method at the lowest delivery rate; seven cubic meters delivered per day. It also highlights those factors that varied as the pumping rate changed. Under the diesel motor option only the daily volume and population varied. Within the program, calculations kept track of the change in reservoir sizes, fuel consumption, etc. brought about by increased pumping times. With the PV option it was also necessary to vary the piping system as each incremental increase changed the flow regime and the cost for conveying water uphill. Only those factors that were different between the options were included in the analysis. For example, the cost of the downstream distribution (pipes and standpipes) was not included since it would be identical for both systems.

## DISCUSSION OF THE RESULTS

The analysis was limited to the particular setting described earlier and examined only the effect of different daily pumping requirements on the economies of the systems. No attempt was made to test the sensitivity of the results to purely economic variables such as inflation or discount rates, which would affect each option more or less equally. Nor did it include theoretical prices to determine at what point either technology maintains a distinct advantage. The results are briefly covered below in relation to the two headings of Life Cycle Costs and its components, and the unit costs for water delivered.

### A. LIFE CYCLE COST (LCC)

Recalling that the LCC is composed of all the capital and recurrent costs over the life of the project, the graphs of Appendix 3 present the LCC in bar graphs showing the two components contribution to the total. The graph below more clearly shows the relationship between the two options themselves.

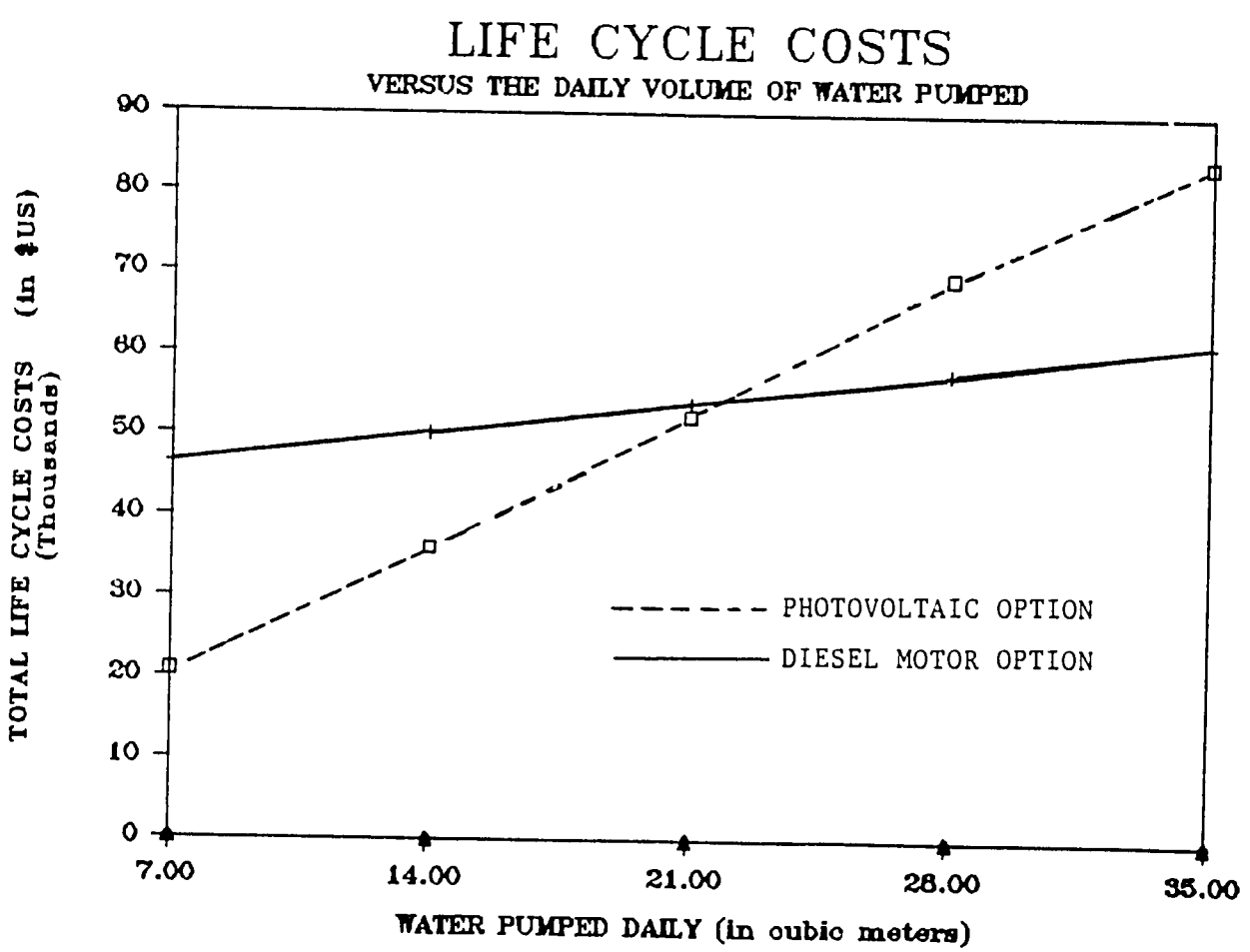

In the range of this analysis, the total costs for the two systems equal out in the neigborhood of 21 cubic meters of water delivered per day. However, the two components of this total differ greatly. The PV option has almost exclusively a capital cost component while, as expected, the diesel motor option has substantial recurrent costs. Still, beyond the level of 21 $m^3$/day the more rapidly mounting costs of the PV option favor the choice of diesel motor pumps.

If one considers the consumer's ability to support all the recurrent costs as the sole criteria in any evaluation, as the local government is strongly advocating, then the PV option remains the clear choice. The graph below indicates just how wide the gap is between the technologies. It shows how much each beneficiary would have to contribute annually to cover the operation and maintenance costs. A more appropriate figure would be gained by multiplying by five to show how much a typical family would have to pay. For example, a PV system delivering 21 $m^3$/day would cost each family $2.82 annually while a similar diesel pump system would require a $12.75 fee. This is not a small difference to rural Rwandan families.

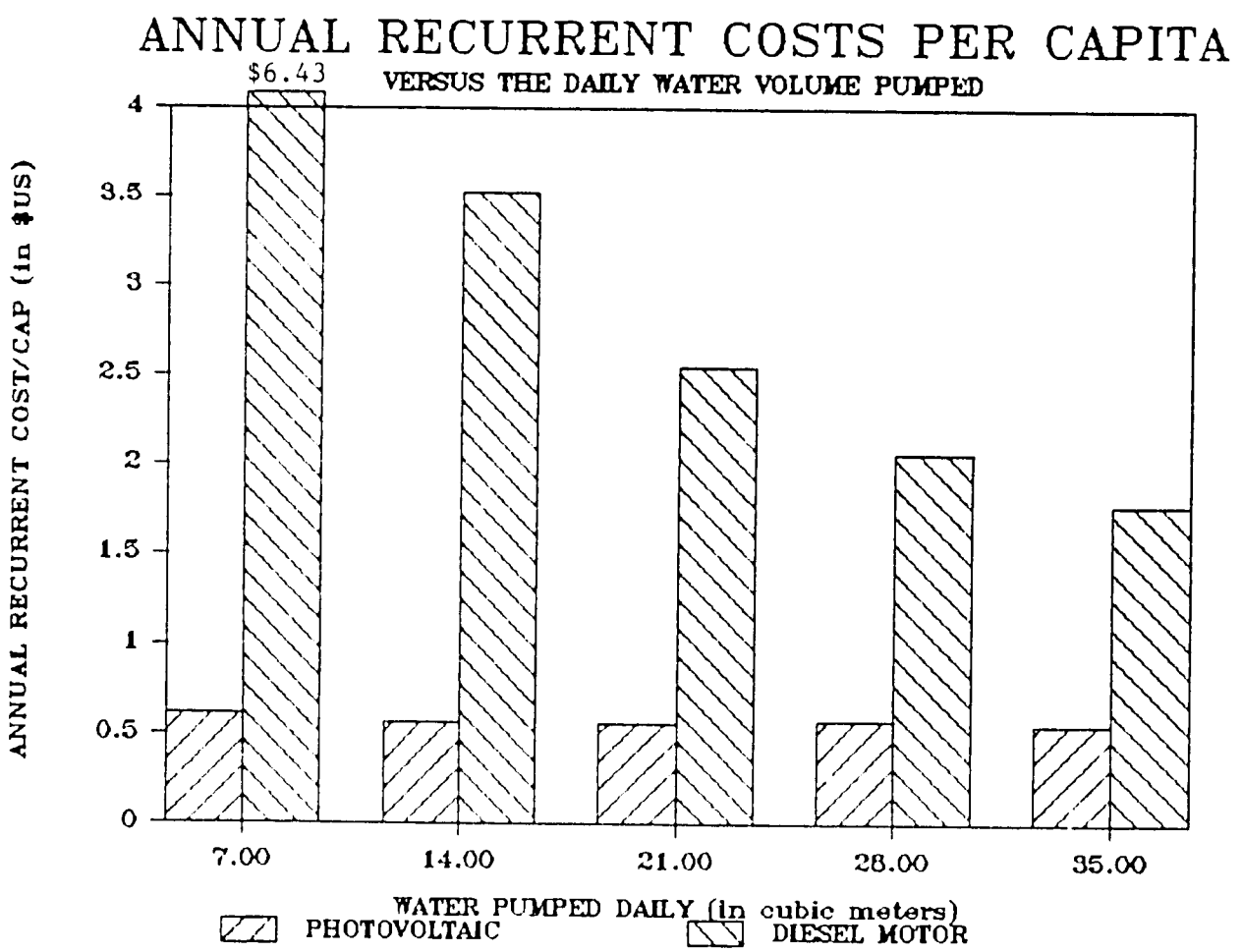

B. UNIT COSTS OF WATER

The graph below traces the decline of the unit costs of water as the scale of each system becomes progressively larger. As the PV option's major costs are capital, its price per cubic meter delivered change very little; i.e., an increase in capital expenditures produces a relatively identical increase in the volume of water pumped. For the diesel motor option, however, important economies of scale are realized by spreading a relatively fixed capital investment over more and more users whose operation and maintenance costs are generally stable per unit of water delivered. Interestingly all of the unit costs, except one, for both of the options are more expensive than a cubic meter of water delivered to household users in the capital city who pay $0.53/m^3$. The average cost per cubic meter for the PV option is around $0.85 and only the diesel option, pumping at rates of 35 or more cubic meters a day produced costs less than urban networks.

Some users in the rural zone are already purchasing water through a network of small suppliers delivering water by pick-up truck. Prices can be quite high, approaching $15.00/m^3$ when the local unit of measure (the 20 liter jerrican) is extrapolated. Most of these users are government officials, agents or local merchants. The majority of the population resorts to sending family members to distant water points in the region. Current studies indicate that prices such as those above are beginning to be within the reach of the average rural family. Therefore no reasonable option should be neglected in supplying water in the rural areas.

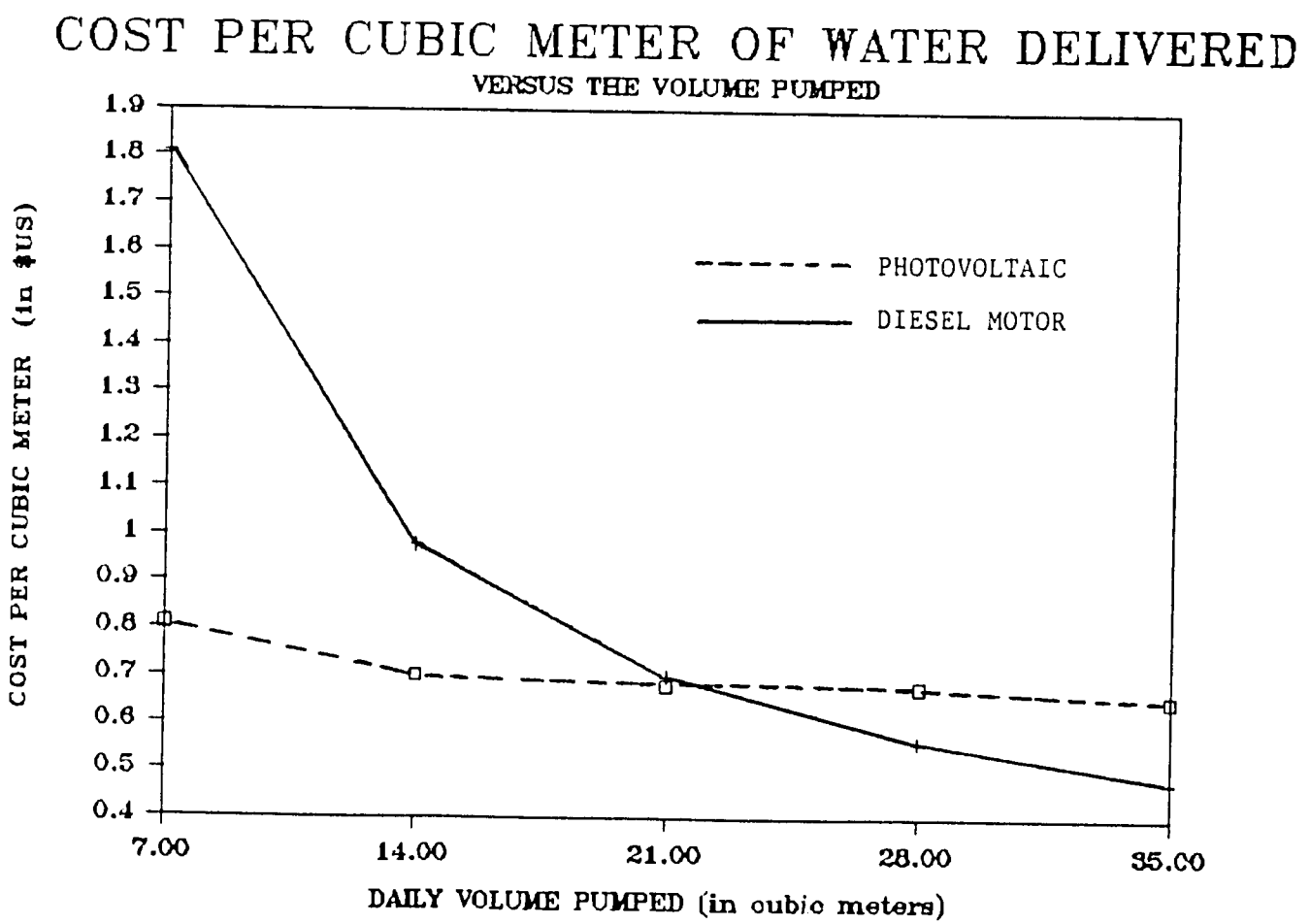

## CONCLUSIONS

The information gained from the analysis can be summarized as follows:

1. Although the price of photovoltaic arrays and associated equipment has fallen in recent years, more standard pumping technologies may still offer the most cost effective means of providing water. Certainly this becomes more apparent as the water lifting requirements (cubic meters X meters of lift) increase.

2. Under specific conditions and at a limited scale PV water pumping can be an attractive alternative against more standard methods, even at relatively high heads.

3. If the most important criteria becomes shifting the whole of the recurrent costs burden to the consumers (and an outside authority furnishes the capital costs!), then PV pumping schemes become a clear choice. But this supposes a continual financial burden for agencies undertaking the capital investments.

Perhaps the most important statement that can be made here is that any consideration of these technologies will have to be closely evaluated on a case by case basis. The prices of PV systems have not fallen sufficiently, nor has their reliability been unquestionably demonstrated to a degree where a blanket recommendation can be made. Local factors, such as the high price of fuel in Rwanda and the goverment's determination to shift recurrent costs to the users, still play the most important role in determining a choice. Therefore it is critical that planners conduct their own analyses before making a choice.

APPENDIX 1

# COMPARISON OF PUMPING TECHNOLOGIES

# FOR VILLAGE WATER SUPPLIES

## CASE OF DIESEL MOTOR PUMPS AND PHOTOVOLTAIC PUMPS UNDER HIGH HEAD CONDITIONS

### I. BASIC ASSUMPTIONS

| VARIABLE | DIESEL VALUE (7 $m^3$/day) | PHOTOVOLTAIC VALUE (7 $m^3$/day) | UNIT OF MEASURE |
|---|---|---|---|
| **A. TECHNICAL FACTORS** | | | |
| DAILY WATER DEMAND | 7.00 ** | 7.00 ** | cubic meters |
| AVERAGE SOURCE FLOW | 0.75 | 0.75 | liters/sec |
| PEAK PUMP FLOW | 2.80 | 1.00 ** | liters/sec |
| OPERATING FACTOR | 1.00 | 1.00 | every -x- day(s) |
| PUMPING LENGHT | 800.00 | 800.00 | meters |
| PIPING COSTS | 6.50 | 3.50 ** | $U.S./meter |
| FUEL CONSUMPTION | 1.50 | 0.00 | liters/hour |
| FUEL COSTS | 0.75 | 0.00 | $U.S./liter |
| FENCE COSTS | 0.00 | 10.00 | $U.S./meter |
| FENCE LENGHT | 0.00 | 100.00 | meters |
| PANEL SUPPORT COSTS | 0.00 | 100.00 | $U.S./ sq. meter |
| PV PANEL REQUIREMENTS | 0.00 | 15.00 | sq. meters |
| PUMPHOUSE | 1.00 | 0.00 | quantity |
| PUMPHOUSE COST | 5000.00 | 0.00 | $U.S./unit |
| **B. ECONOMIC FACTORS** | | | |
| POPULATION | 467.00 ** | 467.00 ** | |
| LIFE OF PROJECT | 15.00 | 15.00 | years |
| INTEREST RATE | 0.10 | 0.10 | percent |
| DISCOUNT RATE | 0.10 | 0.10 | percent |
| INFLATION RATE | 0.05 | 0.05 | percent |
| TECHNICIAN SALARY | 200.00 | 0.00 | $U.S./month |
| TECHNICIANS NEEDED | 1.00 | 0.00 | number |
| **C. COMPONENT LIFETIMES AND MAINTENANCE REQUIREMENTS** | | | |
| PUMP | 15/5 | 10/1 [1] | |
| MOTOR | 15/5 | ---- | |
| PV PANELS | ---- | 15/1 | |
| RESERVOIRS | 15/0 | 15/0 | |
| PUMPHOUSE | 15/0 | ---- | |
| FENCE | ---- | 15/0 | |
| PIPING | 15/2 | 15/2 | |
| PANEL SUPPORTS | ---- | 15/0 | |

** values that varied for either option during recalculations

[1] life in years/percentage of original cost for yearly maintenance

## II. ECONOMIC ANALYSIS - ECONOMIC FACTORS TRACKED DURING EACH RECALCULATION

| | DIESEL SYSTEM at 7 $m^3$/day | PHOTOVOLTAIC at 7 $m^3$/day |
|---|---|---|
| A. LIFE CYCLE COSTS (LCC) (capital + recurrent) | $46,486.18 | $20,799.16 |
| B. ANNUAL EQUIVALENT OF LIFE CYCLE COSTS (ALCC) ** | $4,627.14 | $2,070.30 |
| C. UNIT WATER COSTS | | |
| price/cubic meter | $1.18 | $0.81 |
| price/20 liter can | $0.036 | $0.016 |
| D. PER CAPITA COSTS | | |
| capital costs per capita | $34.97 | $38.40 |
| total recurrent costs/cap | $64.57 | $6.13 |
| LCC per capita | $99.54 | $44.54 |
| ALCC per capita | $9.91 | $4.43 |
| annual equivalent of total recurrent costs/capita | $6.43 | $0.61 |

** the annual equivalent of LCC can be defined as the value of all costs over the life of the project expressed as an annual payment for each year in current dollars. The calculation depends on the selection of an appropriate discount rate. This was also done to estimate a realistic value for a minimum annual user fee that will recover the recurrent expenses.

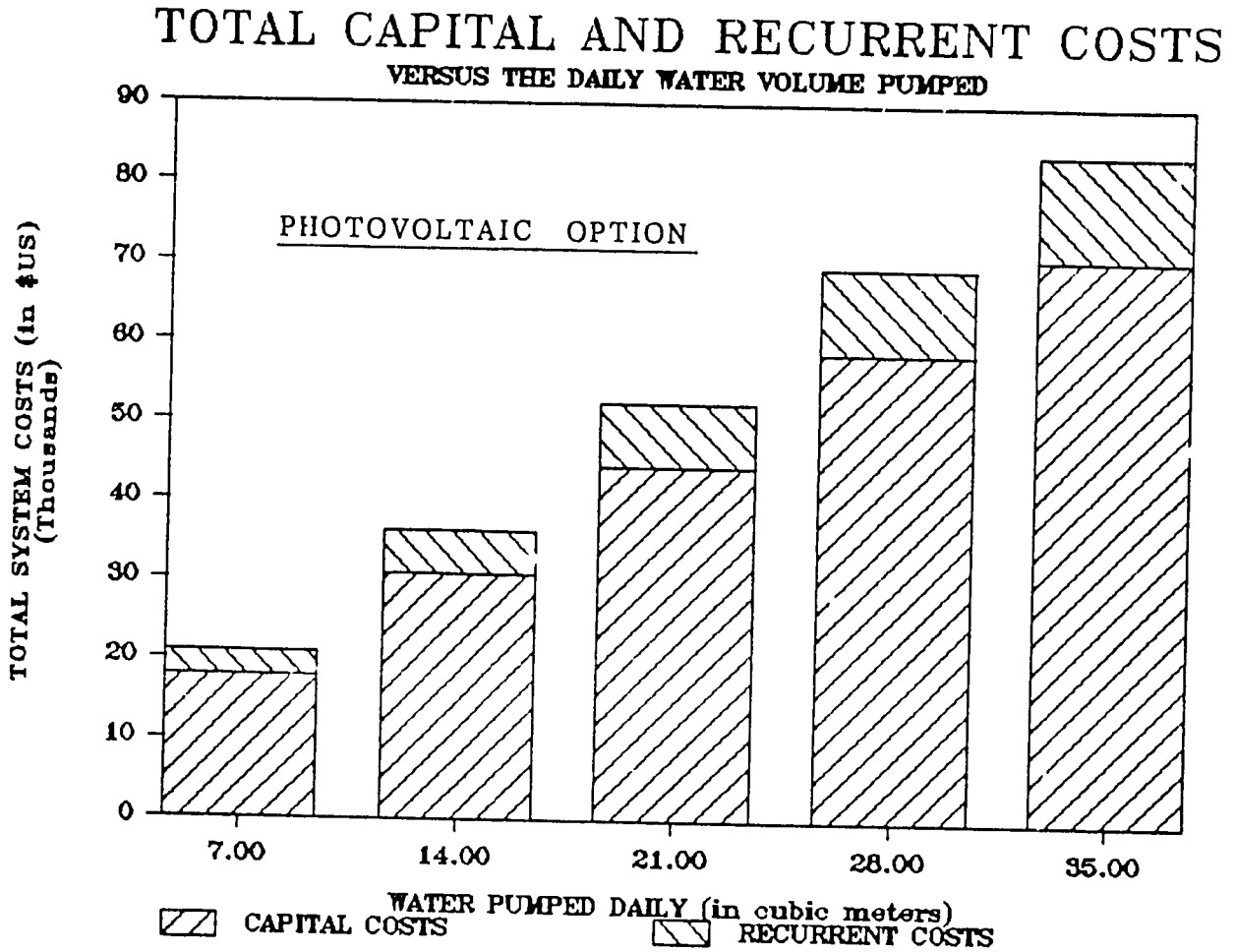
TOTAL CAPITAL AND RECURRENT COSTS
VERSUS THE DAILY WATER VOLUME PUMPED
PHOTOVOLTAIC OPTION
TOTAL SYSTEM COSTS (in $US)
(Thousands)
90
80
70
60
50
40
30
20
10
0
7.00
14.00
21.00
28.00
35.00
WATER PUMPED DAILY (in cubic meters)
CAPITAL COSTS
RECURRENT COSTS

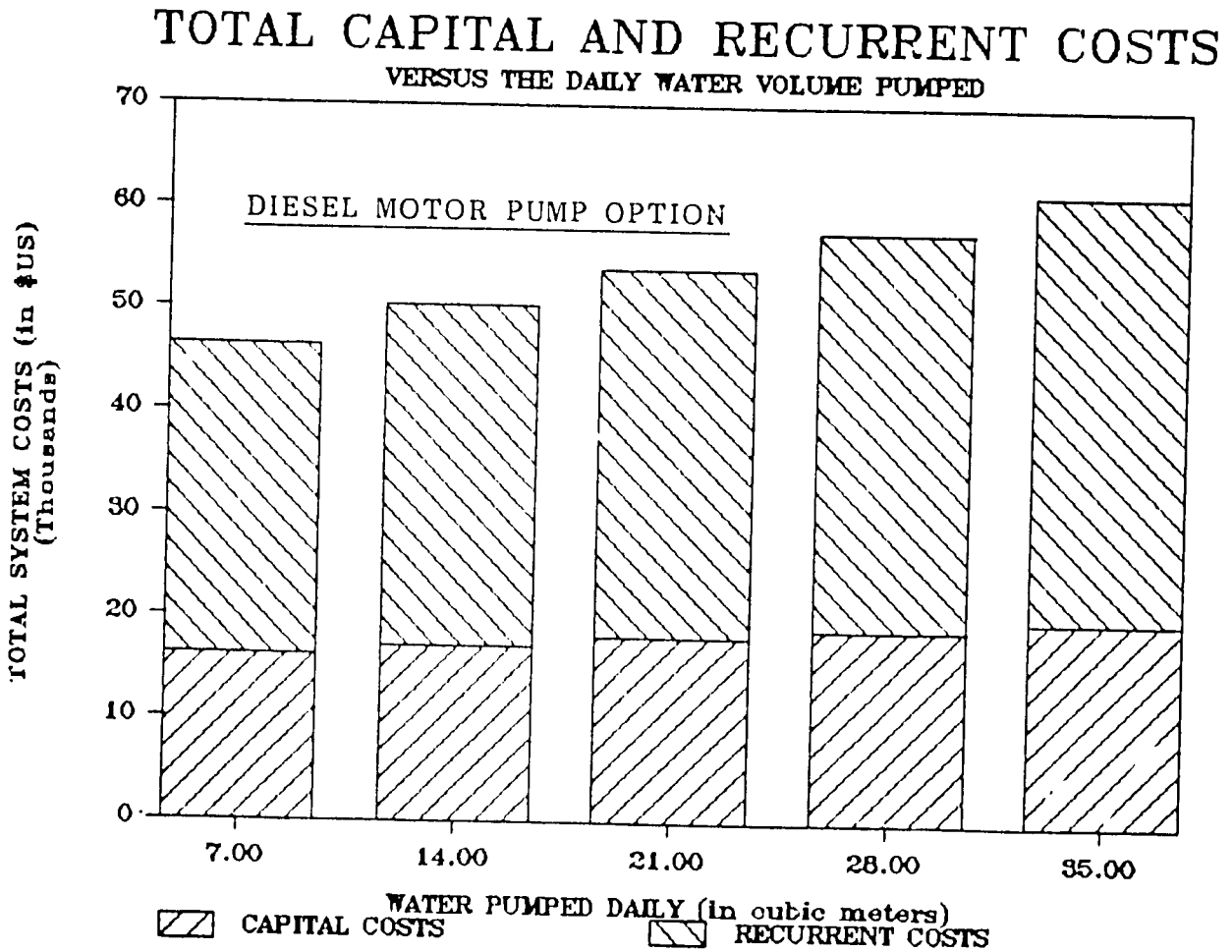
TOTAL CAPITAL AND RECURRENT COSTS
VERSUS THE DAILY WATER VOLUME PUMPED
DIESEL MOTOR PUMP OPTION
TOTAL SYSTEM COSTS (in $US)
(Thousands)
70
60
50
40
30
20
10
0
7.00
14.00
21.00
28.00
35.00
WATER PUMPED DAILY (in cubic meters)
CAPITAL COSTS
RECURRENT COSTS

175

# Animal Drawn Pump

## An Appropriate Technology

A Rural Industries Innovation Centre Project

**Supported by Appropriate Technology International**

**Pumping water using draught animals -**
**An old concept with new technology**

**by**
**Warren W. Jones**
2 April 1987

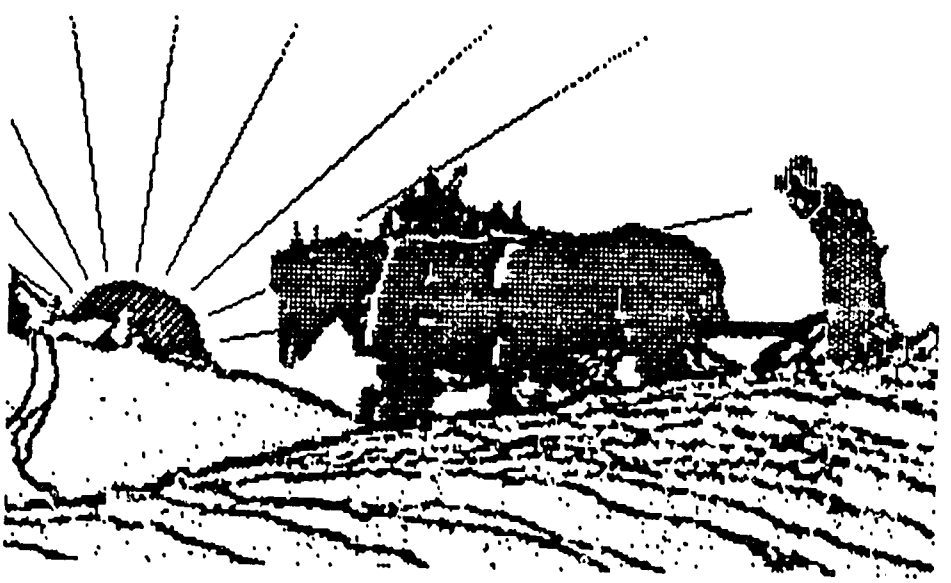

The Animal Drawn Pump which has been developed at RIIC at Kanye, Botswana, is a unique adaptation of a very old technology. Indeed, animal power was one of the earliest renewable technologies used by man. In various parts of the world, the age-old sound of wooden water-lifting wheels can still be heard, following in a tradition dating back hundreds of years. But the traditional approach to water-lifting has been adapted to the unique needs and resources of Botswana.

**High-power, high-rpm**

Powerful, rotary motion; that's what diesel engines produce. The RIIC design for animal-powered water-lifting aims at replacing diesel engines as a source of power for pumping water. Designed to transmit up to 1.75 kW at 1500 rpm, the ADP can replace small diesel engines in certain applications. Up to 8 oxen can be harnessed to the ADP to drive it.

The original concept for the ADP came from an inquiry from the technical advisor of an horticultural cooperative in Manyana. His request was quite straightforward: could RIIC design a machine which would use animal draught power to pump water from the river to their reservoir, replacing the diesel-driven pumps they were using? They needed 200 $m^3$/day lifted 10 metres; this would enable them to irrigate a 5-hectare plot without the heavy overhead of diesel fuel costs.

Thus, the very first Animal Drawn Pump, or ADP, was developed to drive a centrifugal pump for irrigation purposes. This explains the unique capabilities of this design. It was quickly realized that the ADP could also be used quite effectively to drive the most common type of borehole pump in Botswana, the Mono pump. This application would enable farmers to pump from relatively deep boreholes to water cattle or other stock, without having to pay for diesel fuel.

**Site selection - Why ADP?**

The ADP, because of its unique design, is suited to certain sites. Windmills, biogas plants, photo-voltaic powered pumps, diesel-driven, and electric pumps are each specially suited for certain types of sites, given the availability of the appropriate resources and operating conditions. Although there are some overlapping conditions, the ADP is particularly designed to produce 200 - 400 $m^4$ (eg 10 $m^3$ at 20 m head) per hour, on demand, where draught animals , as well as the skills and organization required to utilize them, are available.

The primary uses for water produced by the ADP are small-scale agricultural enterprises. Typically, these enterprises are organized as groups of farmers who otherwise would be too poor to manage on their own. The most common uses are for watering stock, irrigating small plots of 5 hectares or less, or for small village water supply, or some combination. The ADP is specifically aimed at assisting small, rural groups who wish to improve their profitability (or establish a profitable enterprise) by substantially reducing their recurrent costs for water pumping.

### How does it work?

The original design of the ADP was based on a combination of chain-sprocket and poly-vee belt-pulley speed increasing steps mounted in a fabricated angle-iron frame. A set of 3, 6-metre-long draw-arms were used to harness draught animals to the centre pivot, turning 3, 76 tooth, 1" pitch sprockets supported on a 110 mm ø cantilevered shaft. The 3 internal steps gave a ratio of 1:159, a fourth step between the ADP and the pump could be specified at ratios of up to 1:6, resulting in a total ratio of up to 1:954.

Although considerable success has been achieved with the Mk I (original design) ADP, certain flaws in its design caused great concern among staff at RIIC. These concerns were addressed through a process of design review, resulting in a completely redesigned MkII ADP.

### MkII - cheaper, more durable

The foremost concern was the anticipated life of the MkI: 10 year life was an important design objective. Reduced life would mean higher costs, making the ADP less desirable and sustainable. Two major problems had to be resolved: 1) protection of rotating elements from dust and water and 2) adequate lubrication of chains and sprockets without contaminating the belts and pulleys. The first problem also was related to the cost of the MKI: fabrication and alignment of the angle iron frame was a difficult and time-consuming process, and resulted in an open structure difficult to enclose securely. The second problem resulted from the unfortunate placement of the final drive belt underneath the second chain drive, making it impossible to apply sufficient grease to the chain without also greasing the belt.

Design review at a small, sparsely-staffed development centre is at best a difficult and time-consuming process. The decision to undertake the review was not an easy one, but seemed to be essential to the continued life of the project: confidence in the design is a necessary precondition to promotion of the technology.

The MkII ADP is more compact, less than a metre square, and is totally enclosed. It incorporates recirculating oil lubrication of the final three stages (all four stages are chain and sprocket drives), while grease is used to lubricate the first step. Twin draw arms are flanged directly to the first sprocket, a triplex, 1" pitch, 114 tooth driver. Driving a 19 tooth sprocket, a ratio of 6:1 is achieved. In order to simplify and compress the drive, the second step uses the same pitch and ratio, allowing the second set of sprockets to mounted on the same shafts as the first set. (See sketch 1, below)

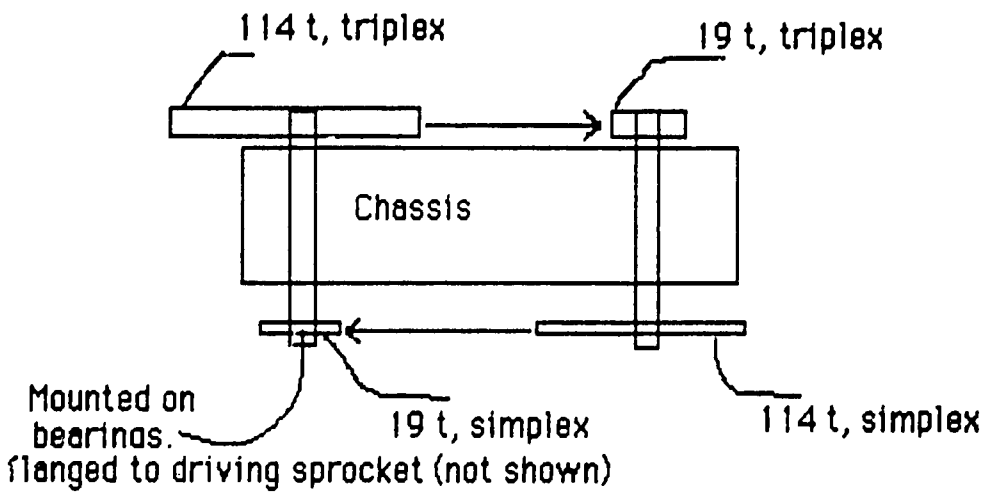


**Sketch 1**

This design eliminates all torque load on the first shaft; it is only supporting the side-loading of the sprockets. The torque is transmitted through the triplex chain on the first step, and is transferred by a bolted flange from the 19 tooth simplex sprocket of the 2nd step to the114 tooth, $^1/_2$" pitch simplex driving sprocket of the 3rd step.

The chassis forming the backbone of the ADP is fabricated from six lengths of 250 mm lipped channel, formed by press-brake from 4.5 mm plate. These are first notched to fit together forming two transverse box beams enclosed on both ends by longitudinal beams. (See sketch 2, next page)

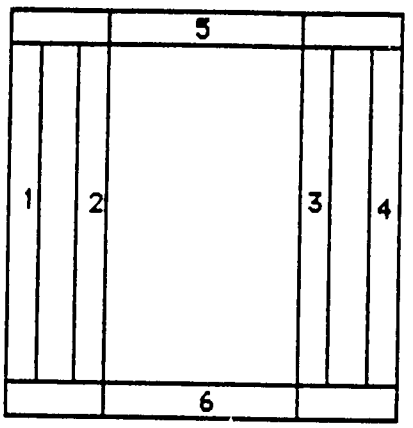


**Sketch 2**, ADP chassis, plan view

The box structure of lipped channels is enclosed top and bottom with 5mm plate. To facilitate welding and assembly, the bottom plate only partially covers the lipped channels. The top and bottom plates are the mounting surfaces for bearings and chain tensioners. Elastomer element chain tensioners are used on each chain to maintain tension over long periods without adjustment. All chains, sprockets, bearings and tensioners are outside the chassis, allowing relatively easy access.

The chassis is supported by 4 legs fabricated of the same lipped channel bolted into the ends of the box beams formed by the transverse lipped channels. The bearings supporting the first 2 shafts are mounted directly above and below these box beams, thus placing their loads into the most rigid portions of the chassis, which are in turn transferring the forces from the draw-arms into the legs.

The ratios of the 4 steps:

114:19 - 6:1 1st step
114:19 - 6:1 2nd step
114:19 - 6:1 3rd step
70:19 - 3.8:1 4th step

Total ratio - 820:1.

The final sprocket ratio can be adjusted at time of manufacture to obtain the optimum final speed, suitable to the animals to be used and the pump which will be driven. Also, the final pulley drive between the ADP and the pump can be selected to make some final adjustment in the pump speed. The pulley has a vertical adjustment range of about 250mm to accomodate variations in pump drive-head heights.

The lengthy process of reviewing the design, preparing new drawings, and making the first two prototypes of the MkII ADP tested the resolve and financial resources of RIIC; the support of Appropriate Technology International, not only with funds but also with continuing encouragement and monitoring of progress played a key role in enabling RIIC to successfully accomplish this task. ATI also had their engineer, Carl Bielenberg, visit RIIC to assess the results of the new design effort. He examined the first prototype, looked through the drawings and checked some of the key calculations. Having the perspective which Carl provided helped give assurance to RIIC that the results of the design review were worth the effort.

Carl was extremely complimentary on the engineering and shop work evident in the first prototype. It was, in his words, "beautiful". But he later also pointed out that the RIIC design was not as replicable in other countries as he would have liked, since it is based on ready availability of large sprockets, chains and bearings. He suggested that at some later time, RIIC should consider designing a lower-power, lower-cost ADP which would be more easily replicated in other countries. Some tentative plans have been made to do this at a later time, after completion of market study to evaluate the potential demand for such a low-end ADP.

**Field results**

The true measure for any appropriate technology is its acceptance and long-term use in the field. Not incidentally, this is also the most difficult part of any appropriate technology project. The ADP has had some success and some failures. The most important result of efforts made so far is to define clearly the factors leading to success.

Ten ADP's have been installed at various locations in southern Africa over the last 5 years with varying results:

1) Manyana
Installed October '82, used for irrigation. Operated one year using mules to drive a centrifugal pump, lifting 35 $m^3$/hour 10 m from a river to a reservoir. Removed after the water flow in the river dwindled to almost nothing.

2) Gamarotswana
Installed May '84, used for watering cattle, driven by a team of 8 donkeys. This ADP has been used seasonally to supplement water normally collected in nearby pans as a

back-up to the diesel engine which was originally installed. This ADP was recently upgraded to use triplex chain in the first step, place the final belt drive outside the housing, which is now quite securely sealed to protect components from dust and water. Still in use, producing 7 $m^3$/hour from 38 m deep borehole, driving a mono pump.

3) Ekuphakameni, Swaziland

Installed November '84, used as water supply for a small village. This ADP was purchased outright as a means of providing reticulated water for a small village. Produced 3.5 $m^3$/hour, using 2 oxen to drive a mono pump, lifted water 63 m to fill 2, 10 $m^3$ ferrocement tanks every other day. Since this was a purchased unit, outside the scope of the original project, data hasn't been collected on a regular basis. Reports indicate that the ADP was used regularly until about March '86, when one of the chains on the first step failed. I wrote to them advising the best means of repairing the ADP, but never received a reply.

4) Khawa

Installed May '85, used as sole source of brackish water for a village and small stock. Produced 2-3 $m^3$ /hour from 70 m deep borehole driving a mono pump; driven by 2 teams of 8-9 donkeys. This ADP was installed as part of a larger project to provide the people of Khawa with a secure (not trucked in) source of domestic water through solar desalination, as well as a reliable supply of brackish water for stock. Although many difficulties were encountered at this site due to its remoteness and low level of social organization, the ADP was used daily for about $1\frac{1}{2}$ years as the sole source of water. Incidentally, the desalinators have also been quite successful here.

The ADP was removed in January '87 after one of the chains on the first step failed. Inspection at RIIC revealed a severe wear pattern on all chains and sprockets: the decision to redesign the ADP was confirmed. In the hostile environment of the Kgalagadi Desert, wear and corrosion due to dust and water is severe. Without careful protection, the ADP would never achieve its design life of 10 years.

The Khawa community has decided that the best means of pumping water for them is by windmill; they have

recently purchased a windmill from RIIC. So the ADP has closed its chapter in Khawa.

5) Tlhatswe

Installed February '85, used for cattle watering. The mono pump at this site was badly corroded, unbeknownst to RIIC. Partly as a result of the problems experienced at this site, RIIC decided that a borehole test unit was needed to evaluate boreholes and the pumps installed on them for suitable matching to the power output of RIIC water-lifting technologies.

The power requirement for this pump exceeded the capacity of the ADP. It was damaged after only a few hours of use. Additionally, proper training of the group was not carried out, due to the shortage of staff in RIIC's extension department. After a few months, the ADP was removed. The Syndicate Officer for the Southern District Council, had arranged (without consulting RIIC) to have the group purchase a new diesel engine and a new set of pipes, rods and pump. This really underlined the need for more effective extension work, not only with the groups using the ADP, but also with other offices engaged in parallel efforts.

6) Tidi

Installed January '86, used for small-scale irrigation demonstration project co-sponsored by ALDEP, a program of the Ministry of Agriculture aimed at assisting the smallest and poorest farmers of Botswana. Driven by 6 donkeys, this ADP produces about 5.5 $m^3$/hour from a hand-dug well about 4 m deep, delivering into a reservoir about 2 m higher than the pump discharge.

Used daily, this ADP empties the well in $1^1/_2$ hours; the group pumps twice a day. The object of this installation is to demonstrate that with an inexpensive source of water, a small group of farmers can generate sufficient income through intensive, irrigation-supplemented crop production from a relatively small plot: during their first year of operation, the group of 7 farmers have accumulated P700 in savings after meeting some farming expenses as well as d[illegible]ving some family income.

186

7) Harare, Zimbabwe

This ADP was donated by Appropriate Technology International to facilitate testing and evaluation by the Institute of Agricultural Engineering for possible use in Zimbabwe. Shipped in March '86, it was installed in May '86, but testing didn't actually begin until January '87. The first test report was received at the end of March.

IAE tested the ADP using oxen and a tractor (the oxen were needed for farm work & had to be returned). Test results using the tractor indicate a power loss of 8-20% in the ADP while driving a BH 30S mono pump at 15 & 30 m heads, maintaining 1000 rpm at the pump. Power consumption was calculated to be 620 watts @ 700 rpm up to 1800 watts @ 1500 rpm for a constant head of 40 m.

IAE plans to acquire 4 oxen specifically for testing the ADP further.

8) Mosung

Installed August '86, used for watering cattle. A team of 8 donkeys is used to drive a BP 6L mono pump lifting about 3 $m^3$/hour from about 50 m. The pulley ratio selected results in a pump speed of 750 rpm, absorbing 1000 watts.

This site is next to a large pan, which is used for watering the cattle during the rainy season. An existing reservoir needs repairs before it can be used; final piping connections, including a flow metre, are pending the repair/replacement of the reservoir.

9) Masama

Installed November '86, used for watering cattle. A team of 6 donkeys is used to drive a BP 4L mono pump at 1300 rpm, producing about 3 $m^3$/hour from about 16 m depth from a borehole, absorbing approximately 600 watts. This ADP was installed on a slight hillside, requiring extensive levelling of the walkway for the animals. This work was quickly completed by members of the syndicate anxious to begin using the ADP.

10) Mantshadidi
Installed March '87, to be used to drive a centrifugal pump to lift water from a reservoir behind an earthen dam, to provide irrigation water to 5-hectare cooperative for crop production. An ETA 50-200 pump will be driven at 1500 rpm by donkeys, producing about 25 $m^3$/hour against a head of about 12 m. Power absorbed should be about 1300 watts. This ADP is expected to be operational in 1-2 months. Another demonstration project co-sponsored by ALDEP, the ADP, pump and piping were provided by the people of the USA through the US Ambassador's Self-Help Fund.

**Meeting rural needs**

Although it is still early to answer some questions about the ADP, such as long-term durability and reliability, results so far have been encouraging. If the user group is properly organized, owns or can obtain draught animals, and is willing to make the effort to care for, collect and harness the animals, then the ADP can provide a low-cost alternative to diesel engines in some cases. The ADP is not a magic solution to all water-lifting situations, but it has proven to be effective in certain cases.

The mechanical capability of the ADP has been clearly demonstrated, as has the capacity of draft animals in Botswana to drive the relatively high loads anticipated. Although there have been failures in the field, they relate to the long-term durability of the ADP, not its structural/mechanical strength.

The long-term mechanical life of the MkII ADP remains to be demonstrated; from a design point of view, the limitations of the MkI have been addressed in a comprehensive redesign which has been judged as by an independent engineer as being of high quality. Testing of the first prototype has been underway at RIIC for almost a full year with only minor mechanical problems. To accelerate the assessment of the durability of the ADP, RIIC has recently built a test stand which will allow the MkII ADP to be driven 24 hours per day by an electric motor. While such tests are not 100% realistic, a good indication of the durability of shafts, bearings, sprockets, chains, and tensioners can be obtained in a relatively short period.

Will the ADP become a commercially sustainable technology in Botswana? It is still too early to be sure. But it is safe to say that Botswana will continue to have a fundamental need for water in rural areas, and the cost of diesel fuel will continue to be a significant burden on small, traditional farmers. The need to support the small farmers of Botswana is a crucial one, for they form the single largest group of entrepreneurs in the country; if they are successful, then the social stability and economic foundation of Botswana will be secure. The ADP can help contribute to the success of some of those small farmers.

**Testing at RIIC**

In view of the difficulty of obtaining accurate data consistently from field sites, and as a means of confirming the durability and performance of the MkII ADP, RIIC decided that an extensive program of testing should be undertaken on site. Under controlled conditions, the performance of the ADP with different types of animals, harnesses, pumps and operating conditions could be accurately recorded. Testing began in March '86 and has continued (with some idle periods) until the present time.

The objectives of testing were **1**- verify the design by demonstrating the mechanical transmission capacity of the ADP **2** - verify the capacity of draught animals to produce the power required and **3** - in the process of verifying the first 2, observe the mechanical durability and integrity of the prototype.

The initial test was performed using 4 oxen to drive a BH 100 mono pump at about 900 rpm, producing 9.5 $m^3$ /hour against a head of 20 m. Power absorbed was estimated at 1200 watts. The 4 oxen were not used to walking in a circle and took a few days to become accustomed to the ADP.

Using the same pump and head, 4 mules were used. The mules proved to be more difficult to accustom to the ADP; they had to be led around the walkway for several hours with the pump disconnected from the ADP. They demonstrated that the rotor head (which connects the draw-arms to the first sprocket) was not robust enough. The mules would surge into their harnesses, feel the ADP resisting their pull, relax their effort and then start over again. Quite effective destructive testing. The mules produced 8 $m^3$/hour at slightly lower speed. Incidentally, this result is contrary to the results cited in other studies, which indicate that mules travel at a higher speed than oxen. The discrepancy is probably due to the poor condition and training of the mules.

Testing was suspended until June, while the rotor head was redesigned and a prototype built. Then the oxen were brought back for resumed testing.

The approach taken was to begin with 4 oxen driving an ES 15 mono pump at about 1000 rpm against a simulated head of 10 m. We had purchased a GAL pressure sustaining valve which would allow us to control the back pressure on the pump, simulating heads of up to 80 m, while actually pumping from a 3 m deep sump, recirculating the water through hoses. A 200 litre barrel was installed in the flow path with a pipe emptying into it as a means of making the flow of water visually verifiable. This also allowed spot checking the flow metre to check its accuracy.

Supplemental feeding of the oxen was mandated, so that they wouldn't get progressively weaker as testing continued. In general, the animals seemed to become stronger and faster as the testing continued. This meant that the simulated head reached 60 m before the 4 oxen experienced any difficulty in pulling the ADP.

The head was increased in 10 m increments, operating at each head for a minimum of 5 full days. In actual practice, days were often lost due to weather, lost animals, mechanical repairs, changing pumps (the ES 15 eventually proved to be unreliable and had to be replaced by a newer BP 6L), and other interruptions.

At about 1000 rpm, the flow rate remained fairly constant at 4-5 $m^3$ /hour as the head was increased. A detailed analysis of the data will be developed at a later time.

Testing with oxen concluded in early December after reaching 80 m simulated head, the limit of the pressure sustaining valve.

The present series of tests use donkeys to drive a BP 6M mono pump at about 1000 rpm. It is hoped that a higher-capacity pressure sustaining valve can be obtained, allowing the testing to simulate the deep boreholes found in areas of the Kgalagadi.

**Harnesses**

This aspect of the ADP project was at first given little attention, assuming that the historical use of animal draught power in Botswana would provide a ready source of adequate harnesses. In fact, it appears that general knowledge of harnesses, care of draught animals, hitching and draught implements is quite poor in Botswana.

The most common harness seen in Botswana is cut from tyre casings and fastened together with wire and bolts. Harnesses are attached to traces made from chain with wire and bolts which are usually attached directly to the front of the cart or other implement with little concern for balancing the load among the animals.

Perhaps such harnesses are adequate for infrequent, light work. For use with heavy draught work on a regular basis, they are completely unsuitable. Tyre casings are impermeable to the sweat of animals, trapping moisture in the hair and skin under the breast band. This tends to soften the skin, aggravating whatever abrasion is present. This factor, when combined with the absence of single-trees (short lengths of wood fastened to the traces behind the animal), creates a destructive pattern of severe abrasion of the animals' shoulders under the breast bands. It is common to counteract this problem by raising the breast band until it is right above the shoulders; this places the breast band directly across the animal's windpipe, making it quite difficult to breathe. I dwell on this problem only because it appears to be so common and so difficult to overcome. The typical donkey driver seems oblivious of the basic principles of proper harnessing.

For heavy, sustained draught work, donkeys should be harnessed using a collar which distributes the load evenly over the shoulders. Padding should be provided which is permeable to moisture, drawing the moisture away from the skin and allowing it to evaporate. RIIC has recently been given samples of a suitable collar type of harness for donkeys. Dr. Dick Gray of the Agricultural Technology Improvement Project passed them on to us after obtaining them from Nairobi. An inexpensive manufacturer is being sought to produce a similar harness here in Botswana. This would be a great step forward, not only for the ADP, but for all heavy donkey draught applications in Botswana.

A manufacturer of good quality breast band harnesses is the Kuru Project in D'kar, near Ghanzi. RIIC has recently purchased a number of sets of harness from them, for testing on the ADP. Well-stitched of heavy leather, with good quality rivets and buckles, they should be durable and improve the efficiency of the donkeys.

**Social support - is it sustainable?**

A technology such as the ADP, which requires the user to collect, harness, drive, and care for draught animals, is a *participative* technology. This is in direct contrast to a technology such as the windmill, which operates more or less without human intervention. This aspect of the ADP has good and bad sides to it. But it must be realized that participation is an essential quality of the ADP; this characteristic must not be overlooked when considering the potential problems or positive results of any installation.

Recognition of the importance of the group and its interaction with the ADP came gradually at RIIC. A little over a year ago, a technical extension officer was assigned to the ADP. His efforts have played a pivotal role in successfully placing ADP's with groups who were prepared to participate in producing the water they needed. Economic considerations are just one aspect, and usually not the most important one, which affects the desire or willingness of a group of farmers to take an active part in operating the ADP.

One syndicate was visited by RIIC staff to see if the syndicate could be encouraged to use the ADP at their borehole more consistently. The cost of diesel and its transport to the borehole was added up; so was the cost of repairs to the diesel engine. They had even rented another diesel engine while theirs was being repaired. All together, it had cost the syndicate more than P3500 to operate the diesel engine. They were quite surprised to see how much they had actually spent on pumping. They all vowed to use the ADP instead, so they could save all that money.

But as you might have guessed, they kept right on using the diesel engine. Other factors were more crucial in deciding how they would pump water. It turns out that the syndicate had not been properly constituted with their by-laws and duly elected officers. The only basis for common action was their need for water. The most influential members of the group always managed to get the water they needed, usually at the expense of others. No one was willing to let his own animals be used to pump water for the few who usually got what they wanted. And it was fairly easy for the few to use the funds available from the group to buy fuel. Sometimes the problems have little to do with the technology.

The problems with a participative technology are people-problems, most of the time. This is a good-news bad-news kind of issue. People problems are the most difficult to solve; it takes a lot of time and effort. The outcome is hard to predict; timetables get hard to manage. But after the group has solved the problems related to the ADP, they will have a new level of confidence and

maturity. If the members can work together to make the ADP succeed, then they can also work together to accomplish other goals.

Trying to succeed at subsistence farming in Botswana is not an easy thing to do. Conservative approaches are the only ones which are likely to succeed. It takes time to see if something new is worth the effort and risk involved. And rural, traditional farmers have their own sense of time. Any project which seeks to assist the traditional farmer must adapt itself to the rhythm and pattern of life he follows. Otherwise, the assistance may not really be helpful; assistance may also be rejected.

It appears that the ADP is good conjunction of rural need for water and rural resources in the form of draught animals. Many people have expressed just this point of view. But the conjunction of needs and resources consists of not only technology, but of social innovation. Groups of people have to modify their pattern of life to utilize draught animals to pump water. Are they willing to do this? In some cases it seems to be so. The ADP offers a better way of making a living to some; some of those will be determined to improve their lot in life and will succeed in adapting to the new requirements of pumping water with animals.

**Animal power - other uses?**

The ADP is really only a large transmission, it could be used to drive anything which needs rotary power in the .5-1.5 kW range. RIIC is already considering the development of a grain mill driven by animal power. Stalk choppers, threshers, oil-extractors, fodder balers could all be powered by animals. Soil-cement block molding could be powered by draught power. A century ago, many types of machines were adapted to animal power. Many of the common tasks of a farm were carried out by connecting a special attachment to an animal power unit, much as tractors today are connected to drive elevators, mulchers, mowers, fertilizer spreaders, pumps and other machines.

In many parts of Botswana the water table is quite shallow: less than 7 m. Pumping moderate amounts of water from such a shallow depth can be very efficiently accomplished by diaphragm pumps. Diaphragm pumps don't need rotary motion, they can be driven by a simple reciprocating mechanism which would be relatvely cheap and easy to manufacture. RIIC's Thebe pump could conceivably be adapted to drive such a pump with a minimum of effort. The Thebe pump uses a simple capstan/crank arrangement to drive a walking-beam lifting a piston pump. The capstan/crank could be attached to the operating arm of a diaphragm pump.

A simpler, cheaper type of ADP could be designed using a set of wheels clamped to a ring formed by rolling angle iron to a diameter of 8-10 m. The wheels would drive a central pulley through a long belt tensioned by a counterweight. This would eliminate the cost and difficulty of the first step in the centre pivot design.

Well, thinking of new ideas, that's the easy part. Transforming those ideas into useful, acceptable, sustainable technologies is expensive, time-consuming, and sometimes frustrating. But if it succeeds, then people's lives are improved, and that's what appropriate technology is all about.

# SMALL POWER PUMPS FOR IRRIGATION

Dan Jenkins
USAID/Abidjan
April, 1987

Foreign assistance in irrigation usually conjurs up a picture of dams, large pumping stations and irrigated perimeters in the hundreds or thousands of hectares. On paper these medium or large scale projects look good, and we all hope to see them reap the proposed benefits. They have a real potential to capitalize on economies of scale. They also provide an impressive monument that can be looked upon with pride.

Small scale projects may not look so impressive on paper or on the ground. But they may be able to serve many farmers and communities out of reach of larger scale projects. The objective of this paper is to look at some of the advantages that small pumps may offer, and some of the necessary ingredients and constraints to implementing them.

What is a small pump? Ask ten so-called experts and you will get ten answers. I use two criteria, each of which must be satisfied for a pump to be called small. First, it must be portable. In other words a group of farmers should be able to man handle it up and down a riverbank or into the back of a truck. The second criteria is that the potential irrigated area should not be so big that the user or group cannot plan, install, operate and maintain a water distribution and scheduling system without extensive outside help. This second factor varies highly with the farmers and topography. I have found the upper limits of small pump systems to be somewhere around twenty horsepower, fifty liters per second, and thirty hectares. The thirty hectares will be high unless the topography is very well suited and the users have some good prior experience in irrigation. Novices usually cannot handle much more than five hectares without outside assistance in water distribution and scheduling.

The lower limit of small pumps is set by the smallest technically acceptable units on the market; probably the little Japanese recoil-starter gasoline engine pumpsets. Typically these deliver three or four liters per second at several meters of head, and can irrigate a hectare or two.

These small systems offer the following advantages:

1. They place the maximum amount of responsibility and control in the hands of the users.

2. They require little or no outside intervention for social organization, operation and management.

3. They require minimal initial capital investments, hopefully within the means of the users.

4. The pumps can be taken to a workshop or off season storage by the farmers.

5. The pump can be moved up and down a riverbank by users, eliminating the need for expensive float mounting or pump houses.

6. The distribution and scheduling system can be built, operated and maintained by farmers, even if some technical assistance is needed in initial start up.

7. Systems can be spread out, reaching diverse groups instead of concentrating resources in a few large systems.

8. The overhead for all phases of design, construction and operation is elimated or minimized.

There are significant economies of scale within the small pump range. If suitable land, capital and organization exists, a group can make much more profits from one fifteen-horsepower diesel pump irrigating twenty hectares, than ten four-horsepower gasoline pump sets irrigating twenty hectares. Both initial and operating expenses for the larger diesel pump will be much less.

What are some of the constraints and necessary ingredients for a healthy small-pump irrigation economy? I would put good private sector sales and service first. A dealer must offer a good line of pumps that adequately cover the flow and lift range needed. The dealer must also stock all required spare parts, and provide repair and service when needed. Perhaps most important is that the dealer considers a sale as a vested interest in an irrigation system and his own future.

A second important ingredient is extention or technical assistance to the farmer. Ideally this should come from the pump dealer who sees it in his interest to assure the farmer maximized his profits on the pump, so he can buy another when its life is finished, as well as influence neighboring farmers. The most important extension activity is site and pump selection, or matching the pump to the site. As a bare minimum the dealer should provide this service as part of the sales package.

196

For small pumps the system will usually be pumping from a river over the bank to an adjacent field. The ideal site will have a fairly steep river bank (minimize pipe length). The bank should be slightly higher than the adjacent flood plain, which slopes gently and uniformly away from the river for several hundred meters. This is the usual case in stream beds that are or have been aggrading in recent geological time.

The above description of an ideal site deals with topography only. Soils are equally important. Soils shoud be heavy enough to avoid large losses in conveyance and distribution uniformity. Yet they should not be so heavy as to limit infiltration and drainage. Once a site is selected and agreed upon by the farmers and dealer/agent, an appropriate pump should be selected. It is very important that a pump be selected for the appropriate lift and discharge capacity. A pump with mismatched lift will be inefficient, requiring excess fuel and possibly a reduction in useful life. The discharge capacity of the pump should be adequate to supply enough water in peak demand, but not so much that the size and investment is more than needed.

Farmers must be shown the basics of pump installation, operation and maintenance as part of the sales package. This should include some training in irrigation water distribution, management and scheduling. Many times small farmers tend to be oriented towards minimizing risk as opposed to maximizing production. This is easy to understand if one looks at the economics of subsistance agriculture. On acquiring a pump for the first time, farmers may be afraid to run it for long periods for fear that it will break. The fact is that given proper operation and maintenance, and sufficient land to irrigate, the pump should be run as many hours a day as possible in order to pay off the investment.

We have touched on distribution system operation and maintenance. New pump owners will have a much better chance at economic success if they have some technical assistance their first season in planning and use of and effective distribution and scheduling system. Perhaps this responsibility should move from the dealer to the national extention service.

Credit is another important ingredient in small pump irrigation. Few small holder farmers have the cash to buy even the smallest pump sets. Credit can come directly from a dealer, or from a bank or cooperative. The lending institution must be working hand in hand with the pump dealer and extension service.

Government Policy may also be an important factor in small pump irrigation. Primary constraints may be duties imposed on pumps, pipe, parts and fuel, and price controls of agricultural products, rendering the most efficient systems uneconomical. The bottom line for any small pump project or system is profit.

Transportation and Storage of inputs and outputs may be another constraint to small pump economics. Perhaps a country has rural areas adjacent to perennial rivers, and a good agricultural market in population centers. There must also be adequate transportation and storage facilities to move pumps, fuel, fertilizer and other inputs to the production areas, and produce back to the population centers. A

country which has year-round river transport between these areas is blessed.

There are probably many important issues not touched on here. But this already gives an idea of many things that must come together simultaneously in order for a healthy small pump irrigation economy to take off. In many countries this sector is locked in a vicious cycle. The private sector cannot offer quality pumps and services at a competetive price through volume sales because farmers cannot buy competitively priced pumps and use them to their potential to make a profit. So addressing one or some of the issues and constraints discussed here is of limited use unless they are all looked at and solved simultaneously. Once they have been solved small pump irrigation will not only be self sustaining, but grow in proportion to the market for agricultural products.

THE CONFERENCE ON IMPROVED WATER PUMPING/

WATER LIFTING IN AFRICA

(APRIL 6 - 10, 1987)

GABORONE, BOTSWANA

# IRRIGATION IN LESOTHO:

# PAST, PRESENT AND THE FUTURE

O. LETSELA

K. SKHONYANA

G. JOHNSON

# IRRIGATION IN LESOTHO : PAST, PRESENT AND THE FUTURE POTENTIAL

## Introduction

In order to increase food production to attain self sufficiency in both vegetable and cereal crop production Lesotho has had to engage irrigation practices on the small scale initially, and the trend is continuing to increase. The rainfall pattern in Lesotho is erratic and lack of sufficient moisture at critical stages of crop growth, results in reduced yields. Irrigation is expected to greatly increase yields during these periods. Therefore, the Government sees the need to have irrigation projects at various potential sites to produce import substitution crops to reduce reliance on the R.S.A. for imported vegetables. Also, irrigation is expected to increase labor intensive agricultural enterprises in the rural areas, and to increase income levels of small holders engaged in the irrigated high value crop schemes. The purpose of the paper is to present Lesotho's efforts to introduce the irrigation practice and to exploit all the necessary resources to turn irrigation practice into a major tool to increase food production and generate jobs in the rural areas.

## The Small Beginnings

Between 1964 and 1975, ten research pilot projects were established, but treated as actual production units. Area based projects were also started during this period after intensive study by Binnie and Partners in 1972, which detailed irrigation potential areas. A few examples of major projects undertaken will now be given and these serve as a basis for subsequent expansion in irrigation practice.

## Thaba-Phats'oa Pilot Project

This project, like others, started as a research pilot project in 1964 although the land (2.4ha) was utilized as a production unit as well. The project is in Leribe District. The Lionel Collet Dam, built 2 years previous to the start of the project, is its water resource. The dam was constructed at a cost of M400,000 (approximately US Dollars 180,000) and has almost 18,000 cubic meters capacity which is greatly reduced by silting.

Irrigation production failed for no stated reasons and was not operational again until 1967 after independence when the government had to apply pressure on the farmers to start operations in the summer of 1967/68. The government saw the need to use the available resources of water and good land, and had to resort to pressure to make the farmers aware of these to start irrigation operations.

The operations were revitalized with 11 land owners consolidating their land ito a farm block (Van Oosten, 1972). Total land area was 8.2 ha under overhead sprinkler irrigation. In 1968/69 a further 21.5 ha of land was brought under irrigation and involved 36 farmers. By 1971 total acreage under irrigation was 60.7 ha. Crops grown in the early and subsequent years were maize, beans, wheat, peas and potatoes. Other crops grown, though in smaller percentages were lucerne, teft, cabbages and carrots.

By 1971 this pilot project was no longer part of the research program and was fully begun as an irrigation production unit to serve the farmers who by 1974 had increased in number to 75; they grew maize, beans, wheat and peas on 65ha total land area.

The management of the project was by the Ministry of Agriculture through a project manager assisted by two extension agents. The project manager and his assistants made operational decisions, outlined general cropping policy, and took care of easy administrative duties on the scheme.

Thaba-Phats'oa project was found to be in financial trouble after the Agricultural Development Fund Study in 1975. It unmasked economic and financial problems of the project which were not generally recognized. The study was undertaken because the loaning institution, ADF, was not happy with the low payback rates. One observer said yields were far too low to make irrigation a worthwhile proposition, even with the high prices received for the products (Van Oosten, 1972, p.11). Because of the heavy subsidy by the government who wavered recovery of all fixed charges in order to keep the scheme going (despite the low yields); a false impression of the viability of the scheme was generated. The reasons for the low yields and the problems with the scheme are given below.

## Reasons for Failure

1. Lack of adequate machinery on the site - difficult to schedule mechanical activities when most needed.

2. Difficulty of servicing the equipment on the scheme. Equipment had to be serviced in R.S.A. and had to be sometomes carried to far places in the Republic where they had been purchased and this proved to be taxing on production.

3. Inadequate management - no systematic ordering or use of fertilizers and seeds, or supplies of spares.

4. Disorganization of labor - labor disputes allowed to fester, many of the laborers were old or ill, people often refused to work, weeding often not done and crop prematurely harvested.



181

5. Lack of marketing arrangements and considerable crop damage.

6. Generally poor morale - farmers not consulted in decision making (on cropping patterns, disbursement of funds, etc.).

7. Interference of the village chief (himself a scheme member) with day-to-day operation of the project.

8. Dissatisfaction with profit sharing system - labor contributed equally but profits shared according to acreage 'owned'.

9. Heavy government subsidy funded out of the fixed cost/depreciation fund resulting in bad credit with input suppliers and funding agencies.

10. Subsequent to the ADF revelation, credit to the project was frozen and the project was in deep financial trouble. Efforts to revitalize it by placing it under the **Irrigation Research and Development Program** and by providing emergency bail-out funding failed and the project collapsed in 1977.

In 1978 the scheme was taken over by the Republic of China, who instituted changes in the irrigation method and also leased land from the farmers to go into production themselves. By 1983 about 2.4 ha of cabbage was irrigated and worked by nine families. The Taiwanese also provided funding for inputs and technical advice to the existing cooperative unit.

In 1984 The People's Republic of China took over, and are still operating the scheme. They have inherited the small, cooperative group already at the project. The program includes field preparation and provision of loans for inputs. The farmers pay the loan at the end of the season to the government. The Chinese act as technical advisors, instructing the participants how to carry out all cultural practices associated with vegetable production.

At the beginning, disappointments included social related problems of old laborers who did not turn up for work regularly or who did not take heed of the advice of the Chinese. This resulted in the Chinese doing the work themselves. The situation was saved when the government intervened; the people are now actively participating in doing the work and taking part in planning decisions. The operations are yielding measurable success and farmers are happy with the yields. In fact, the project has now expanded and has led to the start of the new Leshoele Project.

## Ts'akholo Project

This project was also begun as a research project in 1965. The research was to study the potential for irrigated crop production on duplex soils. It is reported that 100 ha of land was to be put under irrigation. One early problem with the project was lack of communication between farmers and the project management. The project members had expected vegetable production and not fodder crops that came in with the research package.

There were fewer social problems in this project than in the Taba-Phata'oa project. This was due to a better relationship between the members and the area chief. Due to a high morale, cooperation was good between members. As a result, it is reported yields were high. In 1975 the Taiwanese took over and in 1983 the Peoples Republic of China ran the project on the same lines as the Thaba-Phats'oa project. Farmers gave enthusiastic participation and yields received, together with returns, were high (30-60 tonnes per ha).

The PROC are operating a gravity feed furrow irrigation system which draws water from a dam. The services provided are the same as those they provide at Thaba-Phats'oa. The Chinese started the project with 3 ha involving three farmers while the Taiwanese had concentrated on the two 10 ha areas originally planned for research purposes. As noted earlier, the farmers were enthusiastic and absorbed the advice given by the Chinese experts. Although over the years the hectares and number of farmers involved with the scheme have shrunk greatly, more area farmers are requesting to join the scheme and plans are underway to expand and to include more hectares. Estimates by one expert are that the project could include about 150 ha of irrigated crops, if properly managed (McKee).

The lesson from this projects seems to that one farmer (one production unit) holds a greater chance for success than trying to get many farmers to pool their land to farm collectively, as evidenced by the fewer social problems experienced than with the Thaba-Phats'oa Project.

## Area-based Projects

The area-based project that the government started were the Senqu River Agricultural Extension Project, the Hololo Valley Project and the Phuthiatsana Integrated Rural Development Project.

## The Senqu River Agricultural Extension Project (SRAEP)

SRAEP covered the Quthing and Mohale's Hoek Districts in the South of the country. The irrigation component of SRAEP has immediate objectives as follows:

1. To demonstrate economic methods for run-of- river irrigation with particular emphasis in fodder production (final target 500 acres);

2. To provide short and medium term credit for the purchase of seasonal inputs for the production of crops, irrigation equipment and tractor units for selected tractor contractors;

3. To leave a well trained cadre of national staff.

"Core areas" - Those areas under irrigation established as consolidated farm blocks to demonstrate the advantages and examine some of the problems inherent in farm block organizations, were brought into operation in 1972. These "core areas" were the Koali II and Ralinku, 14.2 ha and 21 ha respectively. Beans, maize sorghum and vegetables were grown. By 1976, 126 ha were under irrigation representing 105 associated land owners. Types of irrigation systems used were direct river flow surface irrigation, gravity fed sprinkler systems and overhead sprinkler systems pumping from the river. The areas irrigated were Koali II - 42.62 ha, Qomo-Qomong - 15.63 ha, Ralinku - 21.34 ha, Tele - 21.84 ha, and Maphutseng - 26.08 ha.

The purpose of this project was to supply credit, assist in the procurement of inputs, provide technical advice, and act as marketing agent. After harvest costs and returns would be calculated and (if there was profit) scheme members would be paid. The project was to recoup its loans in the form of produce thus hopeing to insure credit and repayment.

Three different share-out systems were chosen by the various farmers' associations:

i) Equal share-out system;
ii) Percentage share-out system; and
iii) Crop Share-out method.

The scheduled four-year review was carried out to evaluate the phase I of the project and to make necessary recommendations for the execution of phase II which was scheduled to begin in January, 1977; however, from the review, it was decided not to continue phase II of operations and SRAEP was terminated in August, 1977.



204

## Reasons for Failure

The following reasons are found to have led to the failure of the project:

a) Staffing - Because of lack of funds for the pre-implementation stage, an extension/training specialist was not hired until 1974. Thus project interaction with chiefs, farmers, and prominent citizens was minimal, the result of which was lack of continuity between pre-planning and implementation stages. Also, because of lack of staff, no social surveys in the pre-planning phase to determine farmers' attitudes toward irrigated crpping or consolidated farm blocks, and no feasibility studies on the economics of irrigated subsistence crops were conducted.

b) No national counterparts were assigned at start of project.

c) Extension Agents were unable to carry out many of their outlined duties.

d) Later, counterparts' input was ignored - project imposed ideas on irrigation on Basotho staff.

e) Effective counterparts were transferred by the Ministry to other areas.

f) The Ministry of Agriculture and the project were vying for the same fields for different uses.

g) Farmers, the Ministry and the project were often at cross purposes.

h) Bulk of production operations was carried out by project staff.

i) Farmers never understood the credit system and often mistook it for share cropping. Farmers were totally unaware of the costs of mechanized irrigated farming and often felt they were cheated, (farm blocks were almost 100% mechanized).

j) Input procurement and distribution were inadequate due to lack of vehicles. In-kind credit was dependent on payback of revolving fund credit. Inputs were often not at farm sites when planting was to be done.

k) Marketing was piecemeal and no marketing specialist was available. Some crops were grown for which there was no market. There were not enough vehicles to handle marketing needs.



205

l) Sloppy credit management - 100% credit was extended and informally granted by crop officers. At no time during the cropping season did farmers have clear ideas of how much they owed the project.

m) Low quality labor - many women, old people, sick and infirm were to move large scale irrigation equipment and carry out other physically demanding jobs.

n) Crop rotation patterns were inappropriate for the weather and climatic conditions.

o) Poor farmers attitude - there was general apathy on the part of the farmers because they were not included in decision making. No preliminary survey to determine farmers' views and wishes was made. Easy credit was extended with most major roles assumed by the project staff. This was coupled with very low or negative payback to farmers. In fact, farmers became innocent spectators in the whole act from whom only labor was demanded.

## Hololo Valley Project

The Hololo Valley Project is located in Butha-Buthe district and funded by the Irish Government. The project started in 1978 with the objective of developing irrigation in the Hololo River Valley to increase agricultural production through the use of irrigation. Small off-channel storage sites were to be used to ultimately irrigate an area of about 102 ha using sprinkler irrigation. This project was viewed as a self help program and training of local Basotho staff was considered a critical component.

Before the Irish began operations, 9ha involving 13 farmers was already under irrigation as a communal irrigation scheme, funded by Canada. A run-of-river overhead sprinkler system was used. A new irrigation scheme was added in 1983 on 3.2 ha involving 3 female farmers after a new pump replacement was bought at no cost to the farmers. A further expansion was done to include 6.1 ha of a "Horticultural Unit" - a combination of fruit tree nursery, demonstration orchard and vegetable area.

Irrigation development is still continuing at Hololo and plans are underway to put more land under irrigation.

Nine farmers who pooled their land for the Horticultural Unit received M150 annually for the use of their land. In addition, the participants received wages and the project horticulturist on site provided advice, supervision and management. The fixed costs were provided for by the project which would recover all the loan gradually over a period of ten years, allowing farmers to retain some of the returns.



206

## Problems with the Project

The major problem of the HVP irrigation scheme is the participants' dependence on the project. The project has failed to realize its main objective of providing training. After nine years, to this year, participants still require considerable assistance in all aspects of production, marketing and management. No charge is made for this management assistance and when the project is turned over to the farmers they may be unwilling to hire a manager as they have never viewed management as a real cost. After nine years of operation the supply of produce is still too unreliable to allow the scheme to make contractual agreements with wholesalers or retailers to allow for guaranteed oulets of produce.

## Phuthiatsana Irrigated Rural Development Project

This project was conceived within a plan to increase the country's productive capacity in the agricultural sector through irrigation when the first Five Year Development Plan was launched in 1970. Two stages of irrigation implementation were envisioned; the first was carrying out research and development of pilot schemes, while the second involved the development of the Phuthiatsana Valley.

The 1972 UNDE - IBRD (Internation Bank for Reconstruction and Development) study by Binnie and Partners recommended the Phuthiatsana Valley, located in the Berea District, as having potential for irrigation development. Other subsequent consulting groups concurred. The World Bank rejected a proposal to fund but the African Development Fund agreed to fund it in 1974. The ADB recommended development of 8,000 acres irrigated land. This 8,000 acre land would be pooled and farmed collectively for easy and efficient land management. This system has been observed to have been successful on the Thaba-Phats'oa Pilot Project. The crops grown would not vary very significantly from those the local people grew; maize, wheat, beans, peas, sorghum and lucerne. 60-40% share cropping arrangement was envisioned. A dam built upstream would not last long due to heavy silting rates of the valley. Conservation measures were suggested in the upstream catchment before the dam could be built.

Subsequently, a "revised plan" was designed by the government and ADB after a subsequent agro-economic study of the project.

At the same time, the ADB had withdrawn funding due to the results of the study. Ths scheme was found to be unprofitable. As a result, the project became integrated in nature, thus the name Phuthiatsana Integrated Rural Development Project and ADV funded the new plan.



201

The irrigation component still remained a major objective, and one of the first goals of the project was to revitalize the 33ha Lebina pilot project. This project is to be included as part of the 200ha designated for irrigation. It is hoped that reviving this scheme would motivate the surrounding farmers to readily welcome irrigation development. This was also viewed as the easiest way to begin the project's production component as the people of Lebina formed part of a viable farmers' association. Lucerne and maize were the major crops grown.

## Other Schemes

Other area-based projects were started by the government from the late sixties and folded up in the mid 1970's. These were the Tsikoane, Hlotse (2 Projects), Leribe, and Rakolo, all in the Leribe District; the Mejametalana government plot, in Maseru; the Fusi scheme in Berea District; Tele Irrigation Project in Quthing; and the Tsa-li-Tlama Irrigation scheme in Mafeteng. All these schemes covered a total area of about 190 ha, of these only the Mejametalana and the Tsa-li-Tlama schemes are still operating successfully by the People's Republic of China.

## The Present Endeavors

Drought that hit this part of Africa is recent years had aroused measurable demand for irrigation schemes by many small holders. The Agricultural Development Bank processess many application to buy irrigation equipment and to finance running funds. The marketing section of the Ministry is constantly under attack to create viable market outlets. The lessons learned from previous failures help those who plan new irrigation scheme whether big or small.

Some of the projects cited above are still surviving; The Hololo River Valley Project, the Lebina Project, the Thaba-Phats'oa, the Ts'a-kholo Project, the Mejametalana and the Tsa-li-Tlama Projects.

The other projects are going to be revived and their pre-implementation reviews and plans will very carefully avoid the former mistakes that lead to failure. As the recent farmers' conference in Maseru showed, these projects must be planned and operated with full farmer participation. Even the new projects to be launched, the Seaka Irrigation Project (400 ha) in Quthing, and the Tsikoane/Matuken Project (500 ha) must have full farmer participation and cooperation from the very beginning. These new projects, to be run-of-river overhead sprinkler, are completely financed by the government with farmer associations having to pay back the loan in time. Vegetables, fodder and some cereal crops are going to be grown.

The objective is still to increase production through extended irrigation projects to make full use of our natural resources - soil and the 'White-Gold' (water) we have so abundantly. The government's objective is also to generate jobs. These are our basis for future expansion of the irrigation efforts throughout the whole country where the necessary resources are available. The USAID/LAPIS Project (Lesotho Agricultural Production and Institutional Support Project) strengthens the Ministry in implementing many more irrigation projects with the aim of making them highly successfull.

## Irrigation in the Near Future

There is great potential for growth in irrigated agriculture in Lesotho. Higher value crops can be produced with a lesser degree of risk if proper production techniques are implemented. Small scale irrigation schemes appear to be better candidates for growth due to a higher degree of management potential. There are two areas that require development; water supply, and technical assistance for the farmers. The key to success will lie in the hands of extension and technical assistance for the farmers.

There will be a potential for at least 1150 ha to come under irrigated production by the year 2000 from the Highalnds Water Project. Techniques for rainfall harvesting are being improved, which can be implemented for small scale irrigation schemes. Well-point sand extraction systems are being considered to obtain a clean water supply, year-round from rivers with high silt loads and seasonal low flow patterns. Problems do exist in obtaining water for irrigation in many parts of Lesotho, but there is a potential for the irrigated acreage to increase substantially.

The greatest challenge lies in providing technical assistance to the farmers who will be utilizing irrigation. Traditional crop production entails planing maize or sorghum which require relatively low labor inputs. Vegetable production, on the other hand, requires high labor inputs, where the farmer must be there everyday. Education in pest control, pesticide handling, pump maintenance, water management, and other components of the whole agricultural scheme must be provided. Another problem is the marketing of the produce. Co-ops can provide some of the assistance required for marketing, but much development is needed in this area. Overall, the potential for irrigated crop production exists. There is a need for a great deal of agricultural extension work to be provided on an on-going basis to insure that the whole production scheme operates efficiently. More resources - manpower and financial - are needed to support the increasing irrigation acitivites which undoubtedly will make a great difference in Lesotho's food production capacity.

References : **Irrigation Projects in Lesotho** : An Historical Analysis by Bonnie Boris and David Holland.

Lesotho Study on Water Resources Development Volume 4 Irrigation : Binnie and Partners, March 1972

Economic Analysis - Thaba-Phats'oa Irrigation Scheme : Van Oosten, 1972.



210

# INDIVIDUAL SMALL SCALE IRRIGATION SCHEMES IN LESOTHO

by HOMER MOORE AND WAYNE NISHEK

LESOTHO AGRICULTURE PRODUCTION AND INSTITUTIONAL SUPPORT PROJECT, MASERU, LESOTHO

for

THE CONFERENCE ON IMPROVED WATER PUMPING/WATER LIFTING IN AFRICA

APRIL 5 - 10, 1987

# INDIVIDUAL SMALL SCALE

# IRRIGATION SCHEMES IN LESOTHO

INSTALLATION OF MODERN IRRIGATION systems in Lesotho started in the late 1950's. Between 1964 and 1975 ten pilot irrigation projects were introduced to research viable irrigation systems. In addition, the larger and comprehensive Area Based Projects in Lesotho have included irrigation components. These pilot and area based projects ranged in size from 21.5 ha (53.2 acres) to over 126 ha. Most all projects were given technical assistance by ex-patriots. When this technical assistance was not available virtually all of these projects failed or have had to be revitalized.

Reasons for Failure:

1. Lack of adequate machinery on the site - difficult to schedule mechanical activities when most needed.

2. Difficulty of servicing the equipment of the scheme, equipment old and of poor design, repairs and parts available in RSA only.

3. Inadequate management - no systematic ordering or use of fertilizers, seeds, supplies or spares.

4. Disorganization of labor - labor disputes allowed to fester, many of the laborers were old or ill; people often refused to work; weeding not done and crops prematurely harvested.

5. Lack of marketing arrangements and considerable crop spoilage.

6. Generally poor morale - farmers not consulted in decision making (on cropping patterns, disbursement of funds etc.).

7. Interferences by village chief with day to day operations of the project.

8. Dissatisfaction with profit sharing system - labor contributed equally but profit shared according to acreage "owned".

9. Heavy government subsidy funded out of the fixed cost/depreciation fund resulting in bad credit with input suppliers and funding agencies.

In view of the above experiences with irrigation in Lesotho, the government of Lesotho and the United States

Agency for International Development (USAID) have initiated the Lesotho Agriculture Production and Institutional Support Project (LAPIS) in the Ministry of Agriculture.

The Lesotho Government and USAID have developed an agricultural strategy relying upon the results of a series of studies, analysis and projects undertaken by the Ministry of Agriculture, USAID and other donors to define the structured, long term agricultural policies.

A summary of baseline data and analysis show the major constraints which have been identified to be as follows:

a) A limited and declining land resource base;

b) A need for strengthening of the Agricultural Extension Program;

c) A general lack of trained and skilled manpower;

d) A low level of agricultural technology;

e) A critically short amount of public finance needed for recurrent costs;

f) The inadequacy and/or untimeliness of services (marketing and inputs).

The Lesotho Agriculture Production and Institutional Support Project (LAPIS) was approved in March 1986, and is to be operational for six years.

The long-term goals of the project are:

* Achieving self-sufficiency in food production;

* Increasing rural income by increasing agricultural production at the small farm level;

* Reducing unemployment by encouraging self-employment and employment in the privately based agricultural sector;

* Increasing the nutritional standard of the overall population;

* Improving the institutional support to provide production services and educational/extension services.

In order to obtain the stated goals, LAPIS was designed with three separate yet interrelated components:

Production Initiative Component (PIC) - designed to increase support for small farmers undertaking production and marketing of high cash value horticultural crops and livestock.

Research (LRC) - designed to provide the technical foundations for introducing new agricultural activities and to improve ongoing production.

Education (LEC) - designed to improve the capability of the Ministry of Agriculture personnel for the purpose of transferring technical information to the farmers for improved production.

The current production initiative planning philosophy is to support and develop the "truck farming" concept as a more appropriate interim farming model. Small scale irrigation production will be primarily for local village markets which also supplies accessible district centers. Under this concept, transport and sales will be normally accomplished by the farmer himself.

Past experiences with donor initiated programs in Lesotho underlines the importance of a thorough understanding of farmer objectives and constraints in agricultural production. Less than successful results have occurred because of the gap between donor objectives and farmer objectives. Farmers are often selective in the kinds of inputs or practices they choose to adopt. Those inputs and practices considered essential to the donor may be rejected by farmers for often poorly understood reasons. For example, an irrigation pump and piping system may be too costly for the returns the farmer expects to realize; or the plan may incur demands on household labor that cannot be met.

The Lesotho Cooperative Credit Union League, Ltd. is the national credit organization that provides the funds to the local credit unions. The credit union staff works closely with the farmers and LAPIS Project personnel to encourage more intensive horticultural and small scale irrigation schemes. Loan funds originate through the credit unions for small farmers requiring input credit for medium and high agricultural production. Farmer financial obligations, involving site development, maintenance and operation, are made clear from the outset. Farmers are required to expend their own funds at an early date in site development.

Farmers must also be reasonably assured of achieving a reliable income from the new undertaking. The PIC and Credit Union Staffs, in consultation with the farmers, consider ways of structuring renumeration to minimize delays in realizing returns.

With the progression of the LAPIS Project, the personnel are identifying training needs for all levels of the Ministry of Agriculture, farmers, support organizations and individuals. Formal training needs are identified and candidates are selected for more informal training (seminars, short courses, workshops, tours etc.). This training is identified as to audience (farmer, extension staff, management staff, and MOA district personnel).

A key objective of this project is to promote small, individual irrigated vegetable production units. Experience to date from June 1, 1986, shows that acreages of schemes are from 0.1 ha to 1.75 ha.

A step by step procedure of stop and go is being followed to move forth with these small production units. These steps include:

I.

The request by an individual for technical assistance comes via the local agricultural office, local credit union or the Agricultural Development Bank.

II.

First considerations taken to validate the request include:

1) Are the soil and water resources adequate for irrigated vegetable production?

2) Does the individual have a keen interest for a lasting production scheme.

3) Results of the credit committee(s)' preliminary analysis of the individual's credit capability.

4) Is there adequate labor available from the household?

5) Does the individual have a means of marketing the produce?

6) Does the local agricultural office have manpower via extention agents or voluntaries to give day to day supervision?

7) Interview form used (Attachment No.1).

## III.

Resource Plan Development:

Regardless of the size of area for the potential production unit, a resource plan is developed. The plan includes:

1) A soil analysis to project fertilizer requirements by crops.

2) A topographic survey to identify property boundaries and elevations for designs.

3) A complete cropping program developed in relation to potential markets. Lesotho produces summer, winter and mid-season crops in the mountain areas. The cropping program focuses on having mature crops available for peak price periods such as the Christmas season as well as for day to day consumption throughout the year. The cropping guidelines include:

   a) Details on inputs by units and cost for fertilizers, seeds, chemicals for pest and weed control, and labor.

   b) Discussion on seedbed preparation in relation to available equipment.

   c) Dates for sowing transplant beds.

   d) Dates for transplanting and seeding.

   e) Harvesting dates.

   f) Spray needs.

4) Marketing requirements including an estimate of farm gate sales, sales in nearby villages and an estimate of units to be sold in regional markets.

5) Alternative designs for sprinkler and/or surface irrigation systems. The design is for peak use, without regard to rainfall. The irrigation systemplan gives a detailed cost estimate and an operation plan.

6) Technical input requirements by discipline man-days.

IV.

The Resource Plan is reviewed with the farmer and his modifications, if any, are incorporated.

V.

A copy of the Resource Plan is given to the local agricultural office for commitment of manpower for technical inputs.

VI.

A copy of the Resource Plan is distributed to lending agencies including Attachment 2.

Since June 1986 reasonable success has been made through the LAPIS approach. There are eight units under production, 14 resource plans have been developed and approximately 40 requests are pending.

A summary of five installed units along the Hlotse River in northwest Lesotho is given for the summer crops of 1986/1987 as Attachment 3. Each of the units were financed through the Pelatsoeu Credit Union.

Problems and experiences gained with the five units through 1986/1987 summer crops have been of a variety. This list is not in the order of priority.

1. Posting of non-trained extension agents.

2. Lack of preparation of adequate seedbed for vegetable production.

3. Failure to sow transplant beds on time to meet the planting date for transplants.

4. Pest Control - Daily observation not being made by farmers.

5. Pump and engine failure.

6. Farmers not setting up lateral line in accordance with operation plan.

7. Not irrigating in sufficient time to meet crop water requirements.

8. Failure to maintain the needed irrigation interval.

9. Farmers' failure to provide labor as required.

10. Farmers' not taking the initiative to market their produce.

11. Non-tillage of land for mid-season and winter crops.

Regardless of the problems mentioned, because of the climatic conditions, soil, water, and the good attitude of the farmers, the results from the summer crops of 1986/1987 are very encouraging.

In summary, the proposed LAPIS Production Initiative Component activities to be implemented will result in improved agricultural production and product marketing, increased income, higher employment, and greater food sufficiency through the establishment of labor intensive high-value horticultural cropping systems and commercial production. Potential crops considered may include: cabbage, green maize, tomatoes, squash, pumpkins, watermelon, peaches, apples, grapes and plums.

The LAPIS Project's commitment is to assure that 150 hectares are irrigated by small scale holder farmers. The commitment also includes the development of 1,500 home gardens and 70 hectares to be operational under seven farmer associations at the end of a five year period.

This paper is concluded with a showing of slides of production, visual aids and a discussion of attachments.

## R E F E R E N C E S

Borris, Bonnie and D. Holland, Irrigation Projects in Lesotho: An Historical Analysis, Agricultural Research Report RD-B-4S, MOA, Maseru, Lesotho, April 1986.

Woods, Mark A. and S. K., Horticultural Proposals, Volume 1. Federal Republic of Germany - Kingdom of Lesotho, Project Preparation Study for a Pilot Phase of a Regional Rural Development Programme for the Matelele Area in Mafeteng District, PN 83,2021.0, Maseru, Lesotho. September 1985.

# WATER ROOF CATCHMENT

Boinett, Oluoch and Muroki of

CARE International in Kenya

P.O. Box 43864

NAIROBI

## RURAL WATER DEVELOPMENT

CARE's present approach is moving away from pumping water projects to low cost water projects with minimal maintenance costs such as spring protection, lining and equipping of shallow wells, excavation of dams, (pans) gravity flow pipe systems, solar pumps and roof catchments.

CARE gets to the community through direct contact or through the Ministry of Water Development, Ministry of Culture and Social Services and other NGO's to support the community efforts in completing their ongoing projects. It is at this stage that CARE, in collaboration with the above parties including that community, assesses the need for water supply.

Although the community has various needs for water e.g. Domestic use, Livestock, Irrigation etc. provision of water is largely dependent on the availability of water sources attributed by the geographical conditions of the area. The priority for water needs goes to Domestic use. To meet this need, consideration is given to the most economical system that can provide potable water to the community. Over the years experience has shown that roof catchments basically meets these requirements.

## ROOF CATCHMENTS

CARE has focussed its assistance in roof catchments in primary schools, secondary schools, and health centres with the hope that the idea of roof catchment and storage water tanks can be duplicated in the homes of the community members. Plans are under way to build some demonstration tanks at individual homes to enhance this idea of roof catchment.

## ROOF CATCHMENT TANKS

CARE has encouraged the construction of three types of tanks for roof catchment in various parts of the country depending on the locally available materials and masons, in order to minimize the cost of building the tanks. These types of tanks are:-

1. Ferrocement tanks
2. Rubble stone tanks/undressed stones
3. Baked bricks

During these tanks construction CARE emphasizes on cost sharing where the community provides the locally available materials such as sand, stones (hard core) and unskilled labour. CARE provides the remaining materials and skilled labour including supervision.



220

CARE trains the masons from local Youth Polytechnics Instructors, ex-graduates of those Youth Polytechnics and local artisans. After their training CARE contracts them to build the water tanks in various sites and they are paid by CARE. The masons are motivated by being awarded contracts and paying them down payments at agreeable percentage while the rest is paid after the completion of work. Credit scheme has not been designed as yet for this program at the moment.

Presently the tanks that have been constructed have shown no problems at all. The community however, are aware of how to carry out any arising repairs and maintaining the gutters and the tanks. The quality of water in few tanks which were not covered is low and arrangements are underway to cover them otherwise quality of water in those tanks which are covered is fairly high. All the roof catchment tanks built through CARE's assistance are ground level tanks.

DESIGN OF TANKS

MINISTRY OF WATER DEVELOPMENT STANDARD MASONARY WATER TANKS

Formerly CARE used to build tanks as per MOWD standards which were found to be expensive and required extensive skilled labour which in most cases is restricted to MOWD masons only. It is due to this high cost expenses that CARE decided to explore on low cost technologies. Through other NGOs e.g. 20 cubic meter tanks costs about Shs.40,000/-($2500) (2,000/= ($125) per 1cu.m).

FERROCEMENT TANKS

The Danida started building this type of tanks at Mutomo Kitui District and their capacities vary from 10 cu.m to 50 Cu m. CARE promotes the 20 cu.m tanks . From experience we have modified the plaster by making the outside plaster a continuous run from roof to wall, this has also reduced the cracks between the roof and the floor. We have also introduced the use of water proof cement which was not there before. This strengthens the walls and prevents the leakages. In some areas the roof has been changed to G.C.I. roof slanting inside thus providing more catchment areas.

The advantages of these type of tanks are (1) Availability of local materials hence low cost, few people are required for labour. Time taken to build the tank is about 9 days. Variations in the tank sizes is high and hence a wider choice.

The disadvantages of ferrocement tanks is that it requires a minimum of about 6" of water in the tank at all times. Construction of Ferrocement tanks began in 1985. Its lifespan has not been determined. The cost of 20Cu.m ferrocement tank is Kshs.12,000/= ($750) including labour Shs.600 ($37.5) per 1Cu.m.

## RUBBLE TANKS

The idea of rubble tanks came to CARE through a Peace Corps Volunteer at Kisii in 1985. These type of tanks vary from 5Cu.m to 100Cu.m Rubble tanks construction involves the use of hardcore as the main ingredient of the tank walls with minimal mortar built by use of a mould.

The roof is covered with G.C.I. sheets or plain sheets. The construction of 10Cu.m tanks takes about 18 days to complete. No modification has been made. Currently we have built tanks ranging from 10Cu.m to 20Cu.m

The advantages of this tank is intensive use of local materials e.g. stones, low cost, takes few days to construct, with minimum leaks.

The disadvantages of rubble tanks is that construction is restricted to areas with a lot of stones otherwise ferrying stones would swell the cost to the higher side. The mould requires a pick up and at least it might be easy to make one at site which will require the service of a carpenter.

The cost of 20 cu.m rubble tank is Kshs.21,200/= ($1325) including labour (Kshs.1060 ($66) per 1cu.m

## BAKED BRICKS

Brick tanks have been in use for many years in areas where bricks are locally (made). Bricks are generally made of sandy soil mixed with water, moulded and sun dried. The dried bricks are baked for construction.

Currently we have a built tanks ranging from 10 cu.m to 20 cu.m The suitable sized of the bricks are laid horizontally like blocks to have a wall thickness of 6" (150m). Barbed wire and /or hooping are used for reinforcements. They are covered with G.C.I. sheets.

Their advantages are that most of the required materials are contributed by the beneficiaries, because of their availability within close proximity.

The disadvantages of this type of tanks is that they can only be constructed where soils are suitable for brick making.

The cost of about 14 cu.m about Kshs.7,240/= ($452) approximately 520/= ($32) per 1 cu.m

## PROPOSED CREDIT SCHEME

Although the type of tanks mentinned are cheaper than MOWD tanks the community (who are considered poor) cannot be able to construct them in their homes as they will still appear expensive to them.



222

It is proposed that the idea of a credit scheme might help if NGOs together with Government of Kenya could come up with a plan. The NGOs/GOK can make funds available for individual and arrangements be made for recovery through a financial institution similar to to the credit facilities offered by other organizations such as Agricultural Finance Corporation (A.F.C.) If this idea is encouraged this might assist in providing potable water closer to the community by the year 2,000 as per Government of Kenya plans.

SUMMARY

The decision of the type of a tank to be constructed rests on the community, therefore the technical advise should be considered appropriate at that level (community level). Experience has shown that the types of tanks mentioned above are applicable in different parts of the country with the necessary modifications, depending on the geographical location.



226

# PROBLEMS AND POTENTIAL SOLUTIONS RELATED TO WATER PUMPING/LIFTING IN GHANA

MICHAEL TSIAGBEY

## INTRODUCTION

Although Ghana is often regarded as a comparatively well watered country, the problem of conservation and utilization of water resources is of major importance everywhere except in some parts of the forest zone where there is little agricultural activity. (Bates, 1962). The greater part of the country, including all the Northern and Eastern districts and some coastal areas, suffers a chronic shortage of water, especially of water fit for drinking.

Improved water supplies are essential if those areas are to increase their population and agricultural activity or indeed even to retain their present number of inhabitants.

The importance of boreholes in many parts of Africa can hardly be over-emphasized. There has been opposition to boring for water in Ghana, however, the Geological Survey Department was able to persuade the Government to embark upon drilling only in recent years.

Irrigation has become a widely acknowledged tool of agricultural development only in the last one or two decades. (Wickham 1986). Now, irrigation schemes are among the most favored development projects in many tropical countries of Africa, Asia and Latin America. In Ghana the importance which irrigation can play in the agricultural development of the country has been recognized by successive regimes since 1950. Not until 1977 when the Government of Ghana took positive steps to eliminate administrative and financial bottlenecks which hampered the efficient planning and execution of irrigation projects in the country, irrigation was quite unpopular.

The water resource development projects in the country are primarily geared towards domestic water supplies and irrigation purposes. For domestic water and irrigation water supplies the country relies on hand pumps and conventional pumps respectively for lifting water.

This paper therefore examines the problems and suggest potential solutions related to the existing water lifting devices in Ghana.

## THE HANDPUMP FOR DOMESTIC WATER SUPPLY

The handpump has found acceptance in areas of the tropics where the supply of water is mainly intended for human consumption, and where only limited numbers of livestock have to be waters. (Edwards et al 1983).

Ghana is no exception in this acceptance. This is evidenced by the drilling of 3,000 wells fitted with handpumps in the Southern third of Ghana's territory by Prakla Seismons Geomechanik of Hanover, West Germany.

A number of good petterns of hand pumps have been developed in the world over the years. In Ghana, one of the universities, University of Science and Technology, Kumasi, has locally produced hand pumps, with a minimum of imported parts.

The 3,000 well project in Ghana involved pump tests performed by foreign and local experts before selecting two pump models for installation. In this pump test, twelve (12) models of pumps including the local produced one, were tested.

The selection of a suitable pump for the Ghana project was based on the criteria of pumps being cheap, robust and easy to maintain. The question then arises, what is meant by an "easy to maintain" pump. A pump that can be repaired by a user without any special training on pumps can be described as an easy to maintain pump. A pump whose parts do not need frequent replacements can also be categorized as an easy to maintain pump. When the question of lack of spare parts arises, then the criterion of easy to maintain, for selecting pumps becomes invalid.

The problem of maintenance of hand pumps in Ghana remains a major set back for water lifting for domestic supply. The Ghana Water and Sewerage Corporation (GWSC) has developed training programs for community representatives on the operation and maintenance of handpumps serving their communities. However, the knowledge of the community pump attendants is limited to regular greasing, cleaning and reporting of major breakdowns of pumps to GWSC. There had been cases of delay in repairs for more than six months because of lack of spares.

Unless there is a trained person to provide spare parts in time and see to faults without delay, breakdowns in the supply will inevitably occur.

Selecting of locally manufactured pumps regardless of its failure to perform very efficiently as those from other experienced pump manufacturers outside the country will definitely guarantee a continuous supply of spare parts.

The problem of lack of education on pumps and their operating characteristics has led to the overstraining of water supply in some areas. Where the supply is from a well or a borehole, excess pumping hours may damage the plant and also the aquifer, both of which will fail eventually.

## CONVENTIONAL PUMPS - WATER SUPPLY FOR IRRIGATION

In recent times the development of water supplies for crops the livestock has tended to rely heavily on the conventional pump imported from developed countries at substantial cost. (Edwards et al 1983)

Among the programs and projects of the organization (Irrigation Development Authority) which handles irrigation development in the country is the establishment of irrigated farms along lakes and perennial rivers so as to bring about a rapid utilization of the lands around such areas for production. For such projects to be implemented, the Government of Ghana inevitably imported a number of pumps for water lifting. Similarly non-governmental agencies also imported a variety of pumps into the country. Lots of these pumps have broken down and been abandoned.

Almost invariably maintenance problems increase since the spare parts backing of such imported pumps is grossly inadequate or non-existent. Even in areas that are not so remote reliability of the water lifting devices is a function of efficiency in supplying stocks of fuel and spare parts. With the rise in the cost of fuel, the experienced pump manufacturers (developed world) is taking a closer look at the development of alternative sources of energy to drive pumps.

## PUMP SELECTION

It is known that the choice of the right pump, for any particular situation(s) is of the utmost importance. Experience shows that pumping problems are most often responsible for the breakdown or poor operation of small water supply systems. (Edwards et al 1983).

It is not possible to establish strict rules for selecting pumps, however, the most important considerations are as follows:

1) Capacity and lift required.
2) Initial cost of the pump and its driving equipment.
3) Cost of operation.
4) The extent and reliability of the service which will be available for maintenance.
5) The desirability of standardization and reduction in the diversity of spare parts.

A considerable number of farmers in Ghana lack the knowledge about the enumerated important considerations for selection of pumps. Instead of seeking advice from government or non-governmental organizations involved in irrigation development, most private farmers rely on the advice of retailers of irrigation pumps. This situation resulted in the acquisition of unsuitable pumps by a number of farmers.

For instance, not many irrigation farmers in the country know that pumps with flat characteristic curves are to be preferred for rural water supply systems since they allow for greater flexibility in design. It is observable in Ghana that equipment bought from the developed world by the state or by private individuals or presented by well-meaning donors within insisting that manufacturers at the same time establish a spares holding and servicing agency has failed to make any impact on Ghana's irrigation development.

Suggested solution to this problem is to allow the supply of pumps from locally established agents in whose interest it is to ensure that their reputation, and hence their business turnover is maintained and that their product and back-up organization gives good service. The idea of dealing with locally established agents will definitely discourage unqualified commercial houses from importing unproven quality pumps into the country.

In addition to maintenance costs, a major cost of pumping is the cost of power to operate the pump.

POWER FOR PUMPING

The types of power available for operating pumps are as follows:

1) Manpower and animal power.
2) Gravity.
3) Wind power.
4) Solar energy.
5) Electricity.
6) Internal combustion engines using petroleum diesel or kerosine.

In Ghana there is a gross reliance on gravity and internal combustion engines as sources of power for most irrigation activities. Manpower and animal power are mainly used for domestic water supply. Solar and electric power are in marginal use. Internal combustion engines, in spite of being expensive and costly to maintain, they are the most common types of power source in use for small scale irrigation schemes. Experience in rural areas indicates that diesel engines are generally the best option even though they are the most expensive in initial cost. (Fraenkel, 1975).

Electricity if available at a reasonable cost is preferred to most other systems because of the low capital and operating costs. Electric motors require very little attention and give long service. It is therefore suggested that the Government of Ghana embarks on rural electrification schemes so as to increase the use of electric power for water lifting in the country.

In tropical Africa, wind energy is not as reliable as in temperate latitudes. In hilly countries the water source is usually found in the bottom of a valley where steady winds do not

penetrate and under such conditions a windmill would be completely uneconomical. (Edwards et al 1983).

Usually a limiting factor in the use of wind energy is the lack of sufficient data on wind speed and duration. Most small climatological or agrometeorology stations only record run-of-wind at 2 meters above ground level. These data are insufficient to estimate wind speed and duration at the height of rotor blades.

In fact a study needs to be conducted in Ghana to identify areas where sufficiently high and constant speeds make wind power a suitable alternative energy source.

While the performance of wind energy systems may be less than that of more sophisticated systems in terms of efficiency, their overall performance per unit cost may well prove superior due to the use of secondhand parts or locally available materials (Fraenkel 1975; WMO 1981, Mano and Jensen 1981).

The value of using locally available materials cannot be over-emphasized. Local availability of materials and spare parts means fewer delays and interruptions associated with obtaining spare parts, maintenance and repair services.

SOLAR ENERGY

It is another source which is claimed to have low operating costs, a long lifetime of the equipment installed, and no need for skilled manpower (ECA 1976). Tropical Africa including Ghana is richly endowed with potential solar energy. Solar powered systems for pumping water require considerable technical skill to install and are still very costly. A unit developing one kilowatts (1 kw) costs at present over Twenty Thousand United States Dollars (Edwards et al 1983). As such, it is only justified for human supply in areas where no other cheaper possibility exists.

The most promising new option on the horizon for water pumping is the concentration of photo voltaic system where costs in the range of US$1,000.00 to US$2,000.00 per kW were estimated in 1980 (UNITAR 1983).

Further research into the technology of harnessing solar power should continue and should be aimed at reducing the capital cost, not only by using cheaper materials and turning to mass production, but also by developing a local capability for manufacturing at least some of the parts such as the solar cells.

An important factor in improving water lifting devices in Ghana is the increasing role of the Government in supporting the improvement of these systems.

## SUMMARY OF SUGGESTED POTENTIAL SOLUTIONS RELATED TO WATER LIFTING IN GHANA

In Ghana, the problems related to water lifting deal mainly with handpumps and conventional pumps (internal combustion engine driven-pumps).

With regard to handpump, there should be a comprehensive training program for village cadres to take over fully responsibility for acquisition of spare parts and prompt repairs.

For the conventional pumps, the Government should standardize the importation of irrigation pumps thus reducing the diversity of spare parts.

There should also be an establishment of well-supported irrigation extension service to improve the knowledge of pump users in operation and maintenance of pumps and selecting of suitable pumps.

The Government and private entrepreneurs should support research and development of cheaper sources of power for pumping, e.g. solar power.

All irrigation equipment dealers should employ qualified irrigation engineers to advise customers.

Finally the Government should play a leading role in supporting the improvement of water pumping in Ghana by way of encouraging local manufacturing of water lifting devices.

## REFERENCES


1) BATES, D.A. 1962 - Rural water supplies in Agriculture and Land use in Ghana, Ed. J.B. Will p. 62-76.

2) ECA (Economic Commission for Africa) 1976 - Problems of water resource development in Africa United Nations Water Conference. African Regional Meeting E/CN14/NRD/WR/1 ECA, Addis Ababa.

3) EDWARDS, K.A. GLASSEN, G.A. & SCHRONTEN, E.H.J. 1983 - International Livestock Centre for African Research Report. The water resource in tropical Africa and its exploitation, ILCA Res. Rep. No. 6 p. 85-92.

4) FRAENKEL, P.L. 1975 - Food from windmills Intermediate Technology Publications Limited, London.

5) MANO A. & JENSEN K. - Hand pumps research and development in water pumping technology. Ethiopian water works Construction Authority/UNIDO ETH/77/013 Addis Ababa.

6) WAGNER, E.G. & LANOIX, J.N. 1969 - Water supply for rural areas and small WHO, Geneva.

7) WICKHAM, T. 1986 - Irrigation system updating planning and management, Span Vol. 29 No. 1 p. 15-17.

8) WMO (World Meteorological Organization) 1981 - Hydrometeorological aspects of the

# REPORT ON PEACE CORPS MALI
# WATER LIFTING TECHNOLOGY
# IN SERVICE TRAINING

SEPTEMBER 1986

Lynn Uttal

APCD

Water Resource Management

## BACKGROUND

The Republic of Mali is one of the Sahalean countries that has suffered enormously from prolonged drought. With decreased rainfall many areas along the Niger river and its tributaries have lost the seasonal inundations that permitted rice cultivation and dry season gardening. Many shallow wells which used to have water all year now go dry for several months each year. Thus village water supplies and water for agriculture and livestock are less available and ever more in demand.

## PROGRAM

Peace Corps Mali, in response to country wide demand for better access to water resources has developed a water resources management program that seeks to increase the awareness and ability of local communities to improve their water situations. One intervention of the Peace Corps program is to train local masons in inexpensive techniques for stabalizing and deepening traditional large diameter wells. Another intervention is the training of local communities in the construction of small earth and rock dams to retain seasonal run off water and to increase ground water recharge. The most recent intervention component concerns water lifting systems for domestic and agricultural water delivery.

## TRAINING

In order to define and develop the water lifting component of the Peace Corps Mali water program, an In Service Training was presented to the Peace Corps water resource management volunteers who had already been in the field for a year or more, and to several Maliens attached to government agencies concerned with agricultural development and the installation and maintenance of water lifting systems.

The background of the training participants were varied. Some had mechanical engineering degrees, others had practical field experience but no formal technical education. The training was therefore designed to provide an overall perspective on water pumping technologies relevent to the Mali context and an introduction to the decision making process required in selecting appropriate systems for various situations.

The training was composed of both theoritical sessions and field work which included examining water lifting systems already in place and installing and testing manually operated systems at a river side lifting station.
The theoritical component commenced with review of the principles of lift, flow, power, and energy. This was followed by a review of the calculations necessary to determine the lifts, flow rates, and power requirements for various situations. Having reviewed the physical principles of water lifting the training participants then examined major pump types such as rotory direct lift, reciprocating direct lift, reciprocating displacement, rotary positive displacement, and rotodynamic pumps. These pump types were compared for their lifting characteristics, opperating efficiencies, and power requirements. The following session took up power sources of prime movers. The participants compared the power outputs and efficiencies of human, animal, internal combustion, electrical, wind, hydro, and solar power sources.

The final sessions of the theorical part of the training was to examen typical situations for village water supply, livestock watering, or irrigation and then to translate the water needs for each situation into power requirements

which were then used to select the most appropriate water lifting systems. There were of course other selection criteria that were considered in addition to power requirements. These included economic and social considerations as well as maintenance requirements and system reliability. By considering the various factors involved in system selection the training participants were introduced to the full range of analitical requirements necessary for the effective application of water lifting systems.

TRAINING EVALUATION

The training consultant who was responsible for curriculum development and presentation stated in his evaluation report that the program was ambitious given the time constraint of six days for presenting material to participants with mostly limited backgrounds in mathematics and physics. However, since the goal of the training was to provide an overall perspective on pumping technology options and the many steps involved in selecting the most appropriate systems for the various situations found in Mali, it was sometimes necessary to move along according to schedule even when it was clear that some participants were not thoroughly assimilating the material.

Since this was the first attempt by Peace Corps Mali to present a training specifically concerned with water lifting technologies difficulties were understandably encountered in assembling and delivering technical teaching materials and in assuring that the necessary equipment was available in good operating condition for the practical demonstrations. In many instances the program had to be adjusted to the realities of the situation.

However, given the general unpredictability of conditions in Mali, the logistical and equipment problems encountered during the training were in many ways an accurate reflection of normal conditions encountered in the field. It is interesting to note that the training participants were much impressed by the fact that the overwhelming majority of pumping systems currently existing in Mali are ill sized, ill installed, and ill maintained. In fact one of the important outcomes of the training was the shared understanding of the importance of accurate assessment and adequate follow up in realizing an effective water lifting project.

FUTURE PROGRAM DIRECTIONS

The water lifting technology component of the Peace Corps Mali Water Resources Management Program is less than a year old. The water lifting in service training held in September 1986 was of great importance in defining the directions of the program. Much was learned during the training about the overall needs for water lifting technologies in Mali, and about the ways in which Peace Corps volunteers can help in addressing those needs. Since Peace Corps Mali is predomentently a small scale people to people technical assistance organization, the most appropriate types of interventions are those which emphasize information and skill transfer at the local level. With these perameters in mind the following program directios have been framed:

1. Based on the experience of the water lifting training, Peace Corps Mali is developing simple assessment models that can be used by volunteers and their counterparts for selecting and sizing pumping systems for small scale applications.



235

2. Since most waterlifting system information requests that come to volunteers are for agricultural projects, Peace Corps is collecting information on currently available water lifting systems to help farmers make informed decisions about which system will best suit their needs and resources.

3. An important and often ill planed part of water lifting systems is the after pump water distribution network. Since Peace Corps has as one of its objectives the promotion of dry season gardening, there is certainly a need for accessable information on proper practice and prototypical layouts for small scale irrigation.

4. Each year in Mali thousands of wells are drilled and fitted with hand pumps under projects funded and often implemented by external Aid organizations. Because of the limited funding available for government run maintenance programs many of the pumps soon fall into disrepair. Efforts are currently underway to move the responsibility of pump repair more into the local level where administrative costs are much lower. Village water committees are being formed by several projects to take post pump installation responsibility. Peace Corps volunteers working in areas where such programs exist are well placed to encourage preventitive pump maintenance.

5. Because of high initial costs and irratic spare part supplies many imported pumps are inappropriate for small scale use in Mali. In these cases locally manufactured low lift low volume pumps can be of service. Peace Corps Mali is currently working with low cost pumps for domestic and agricultural use, and intends to further promote the use and local manufacture of low cost pumps throughout Mali.



236

# PROBLEMS AND POTENTIAL SOLUTIONS RELATED TO IMPROVED WATER PUMPING/LIFTING IN KENYA

William K.K. Boinett
CARE - International in Kenya
Western Region
P.O. Box 88
KISUME

Country Office
P.O. Box 43864
Nairobi
KENYA

## BRIEF INFORMATION ABOUT KENYA

Kenya is in East Africa and is bordered by Somalia and the Indian Ocean to the East, Ethiopia and Sudan in the North. Uganda to the West and Tanzania in the South. The Republic of Kenya has an area of 584,000 sq Kilometres. See Appendix 1. The Estimated population of of Kenya was 20.5 million in 1986.

The rainfall pattern in Kenya is influenced by Kenya's equatorial location, movement of monsoon winds in the Indian ocean and the altitude.

About 12% of the country receives an annual rainfall of 850mm and above. This is classified as a high potential area. 74% of the country receives 650 mm of rainfall or less and is classified as low potential. Kenya has seven main rivers totalling 2360 km in length and ten lakes covering an area of 10,772, sq.km. Four out of ten lakes, have fresh water which store 315 million cubic metres of water (8.3 billion gallons) and these fresh water lakes are under utilized. 3.2% of river water was being utilized as of 1978.

## GOVERNMENT OF KENYA STRATEGY ON WATER SUPPLY

The Government of Kenya strategy on water supply is to supply potable water to the entire population by the year 2000. The Director of Water Development remarked recently (Feb 1987) that 14 million Kenyans lack safe drinking water while 6.5 million kenyans (3.5) million in rural areas and 3 million in urban areas) had access to improved water supply.

## MINISTRY OF WATER DEVELOPMENT

The Ministry of Water Development (MOWD) was formed in 1974 after the government observed a need of providing potable water to the entire population in Kenya. It is the Ministry's responsibility to protect as well as conserve the available water sources. Operation and maintenance of the existing water sources comprises the largest activity within the Ministry.

The Ministry is also responsible for water quality and pollution control. Being the government technical advisor on water and related activities, the Ministry is also charged with the responsibility of planning, designing and construction of new water schemes. This is done indoors or by use of consultants and contractors to subsidize the technical man power.

Technical advice is provided to both self help projects and individuals interested in carrying out independent water projects for agricultural or domestic purposes on their own at no cost.

## OTHER WATER UNDERTAKERS

The Ministry of Water Development does not run all water supplies in the country. Some water supplies are manned by institutions and local authorities with permission from the Minister for Water Development once such authorities are appointed as water undertakers.



238

* COMPARISON OF WATER SUPPLY ALTERNATIVES

INVESTMENT COSTS PER CAPITA

The investment cost data is available for the on going surface water schemes in Kenya. The information processed by the Ministry of Water Development shows that the average investment cost in surface water pumping schemes including full treatment is approximately Kenya Shillings 1200 per Capita for large schemes $75 (Kshs.16=1$).

When underground water is used, the investment cost could be reduced to about Kenya shillings 900/=$56.25) because of limited treatment, where the prime mover used is the diesel engines or electric motors.

The low cost data on low cost alternatives worked out by Kenya Finland Company (Kefinco) in Western Kenya shows that the investment cost of handpump wells costs Kenya shillings 230 ($14) per capita with an average per capita consumption of 37 litres per day, the well serving about 200 consumers (capacity of one well being 7.2 m3/day).

* ANNUAL OPERATIONAL COSTS PER CAPITA

The annual operation cost per capita carried by Kefinco in 1982 is shown below.

| Type of scheme | Annual Operation per capita |
|---|---|
| 1. Surface water | Kshs.42. ($3) |
| 2. Ground water, diesel or electricity driven | Kshs.32. ($2) |
| 3. Hand pump | Kshs.10. ($ 0.6) |

From the above it is clear that a hand pump well is the cheapest to operate. This paper will therefore continue to highlight the problems and potential solut ons related to improved water pumping/lifting in Kenya in order of priorities.

1. HAND PUMP WELLS

Common Problems

Siting of wells

Siting of wells is very important - this avoids the risk of digging or drilling a well and abandoning it later due to lack of sufficient water. The dousing method (the act of scanning underground water by using a special kind of tree branch) should be discouraged in preference of a geophysical surveys, in areas where geophysical survey instruments are available . In Kenya geophysical survey instruments are available in the Lake Basin Development Authority (LBDA) (Kisumu) and Ministry of Water Development (MOWD). This activity can be done by the Government or Local Authority at minimum costs.

It is important to mention at this point that the siting of wells should be at least 30 metres away from pit latrines.



- 239

OWNERSHIP

The wells owned by the central or local government are often out of order after implementation due to lack of proper management or lack of funds. Where the local community (villagers) are supposed to carry out operation and maintenance the same occurs because of lack of knowledge and funds and the villagers should be aware right from the beginning that the well belongs to them at the time of siting through the well committee. In Kenya, all community wells are run by a committee. When the communities are aware of ownership, of the well, it helps to protect vandalism as every member of the community takes care of the well. Any agency, GOK or NGOs supporting a well should instill the concept of ownership to the participants of a given well.

DIGGING/DRILLING OF WELLS

Some wells have dried up after installation a fact which is usually due to the digging of wells during the rainy season when the water table is high. The GOK, LBDA or Kefinco,Swedish International Development Agency (SIDA) in South Coast should plan in such a way that the wells are dug in the dry season. According to Kenfinco estimates for digging a well in the Western Province of Kenya (average depth-40 metres) using a drilling machine is Kshs.30,400 ($1900). Some soils cave in while digging and the use of culverts or baked bricks is a solution to this problem. The cost of culverts is Kshs.400 ($25) and the transportation is yet another problem and this problem could be reduced by making culverts at site.

Another problem is positioning of pump cylinder where some artisans install the pump near the top water level, rendering the pump dry after a short period of pumping. Others lower the pump cylinder right at the floor of the well causing it to clog since it will pump out sediments at the bottom of the well, this problem can be avoided by carrying out test pumping before installation of the hand pump is done.

OPERATION & MAINTENANCE

When a hand pump installation is complete, it is always seen as the end of the project, whether the project is government maintained or maintained by the villagers (local communities), the consumers should be aware right from the beginning of well siting , digging and pump installation that a hand pump like any machine has a lifespan and it depreciates so that any breakdown does not shock the consumers. The government maintained wells are generally out of order due to lack of proper management and lack of funds. It is generally accepted now that the problem of hand pump maintenance is most likely to be solved by giving this responsibility to the community. In Western Kenya this approach has started with LBDA and Kefinco getting the communities participate in well construction right from the beginning of well siting to hand pump installation.

The collection of revenue by consumers if properly pursued could be a solution to hand pump maintenance.

Training of artisans is of prime importance right from planning through implementation to maintenance.

The maintenance cost of a hand pump averages Kshs.2000/= (125$) per year in Western Kenya for 200-300 consumers.

MANUFACTURE, STANDARDIZATION & AVAILABILITY OF SPARES

In Kenya, two institutes of Science and Technology are now manufacturing hand pumps, that is Western college of Art & Applied Science (WECO) in Kakamega and Muranga in Central Province.

The manufacture of hand pumps in a country ensures availability of hand pumps and spares at all times since the restriction of import licence etc... for hand pump and spares slow the process of pumps installation and repairs.

The standardization of hand pumps is not easy. However if standardization was to be achieved, the availability of spares and skills of maintenance would also improve. This idea of standardization is now taking shape e.g. in Western Kenya, Indian Mark II is dominating in Nyanza Province while Nira AF-76 is predominantly in Western Province.

II. GROUND WATER

BORE HOLES & DEEP WELLS DIESEL OR ELECTRICITY DRIVEN

This type of pumping water is usually dictated by un availability of surface water. The advantages of such type of water sources is minimal water treatment (partial treatment if any).

The heavy investment costs and skills needed for boreholes excludes community participation in this type of water undertaking. The siting, drilling, installation, operation and maintenance is left to the local authority or the central government, Few individual and institutions run boreholes on their own. The notable problems and possible solutions are highlighted below.

1. Lack of diesel
2. Lack of electrical service - In Kenya this is being solved by Rural electrification
3. The cost of electricity connection is high hence prohibitive. This leaves pumping/lifting of water from Deep wells to be handled mainly by local authorities, central government and institutions.

* Proceedings of a shallow wells workshop held in Kisumu on 10th to 12th October 1983.



241

## SURFACE WATER PUMPING/LIFTING (DIESEL DRIVEN PUMPS

The cost of pumping/lifting surface water plus the cost of treatment is high as shown earlier on in this brief. The Government of Kenya is planning to shift from large to small water systems (wells, dams, pans) so that communities can be more effective in operating and maintaining their water systems (ROK-Development plan 1984-88 P 161). The common problems related to pumping/lifting of surface water in Kenya and possible solutions are listed below.

| | PROBLEM | POSSIBLE SOLUTIONS | PERSONS RESPONSIBLE |
|---|---|---|---|
| 1. | Poor designs/ trained personnel | Water Engineers/technicians on graduation should work closely under experienced engineers/technicians before they are given responsibilities of designing water projects on their own. Training of all carders of water personnel be intensified | Government, local authority and consultants/ contractors Non Governmental Organizations (NGOs) |
| 2. | Water sources sites of abstraction, some sites have been known to dry up after expensive machinery weirs, and treatment plants have been constructed. | Exhaustive feasibility studies on river gaugings should be done before implementation begins. Possible alternatives for standby should be included such as underground water sources | Local and central government water engineers/ consultants/ contractors NGOs |
| 3. | Poor construction/ pump installation e.g. poor alignment and levelling, position of suction pipe/ foot valve proper rotation of pump and correct speed. | Use of trained technical expertise during pump installation/construction | - do - |

| | | | |
|---|---|---|---|
| 4. | Lack of proper maintenance servicing etc. | Use of staff with technical know how to operate the machinery | Central Govt, local authority community members |
| 5. | Lack of diesel | Explore other possible sources of energy e.g solar wind, gravity fed systems | - do - |
| 6. | Lack of spares | During design, select pumps whose spares are easily obtainable in the country, especially within easy reach from the project area most pump dealers have branches all over Kenya while some have branches in Nairobi only | -do- |

Conclusion

The water pumping/lifting for domestic use in Kenya is given priority by the Government while water pumping/lifting for irrigation is done by National Irrigation Board and other quasi Government bodies in collaboration with the Ministry of Agriculture e.g. Lake Basin Development Authority, Kerio Valley Development Authority, Tana River Development Authority, and Agricultural Development Corporation.

This conference should attempt to come up with a plan of action on how to improve water pumping/lifting for both domestic use and irrigation in order of their priorities, with the view of looking at other alternatives of low cost water supplies.

# 4 KENYA Physical

1:4 500 000

SUDAN
Lorikipi Plain
Chew Bahir (L. Stephanie)
E T H I O P I A
Hander
Ladwar
UGANDA
Mt. Marsabit
Wajir
S O M A L I A
L. Opeto
Tororo
Kitale
Bungoma
Eldoret
L. Baringo
Mt. Kenya
Isiolo
Bilesha Plains
Lorian Swamp
Lagh Dera
KAKAMEGA
Eldama Ravine
Nyahururu
Nanyuki
Maru
KISUMU
Londiani
Molo
NAKURU
Kericho
Elburgon
Eligita
NYERI
Embu
GARISSA
Equator
Homa Bay
Kisii
Naivasha
Muranga
Narok
Kiambu
NAIROBI
Kitui
Hola
Machakos
Ras Kiamboni
Kajiado
Magadi
T A N Z A N I A
Serengeti Plain
Pate I.
Lamu
L. Amboseli
Kilimanjaro
Galana
Sabaki
Vundanyi
Vol.
Malindi
Casuarina Pt.
Kilifi
MOMBASA
Chale Pt.
Tanga
Pemba I.

## GENERAL REFERENCE

**Height of Land in metres**

| Metres | |
|---|---|
| Over 6000 | |
| 4000 - 6000 | |
| 2000 - 4000 | |
| 1000 - 2000 | |
| 400 - 1000 | |
| 200 - 400 | |
| 0 - 200 | |
| Below Sea-Level | |

**Population Cities and Towns**
For pages 34 35 37 38 40 41 42 and 43

| | |
|---|---|
| Over 1 million inhabitants | |
| 500 000 - 1 million | " |
| 200 000 - 500 000 | " |
| 100 000 - 200 000 | " |
| 50 000 - 100 000 | " |
| Under 50 000 | " |

Seasonal Rivers
Rivers
Canals
Railways
Spot heights in metres
International Boundaries

**Kenya's position within Africa**

CONFERENCE ON IMPROVED WATER-PUMPING/WATER LIFTING,
APRIL 5-10, 1987, GABORONE, BOTSWANA

# Topic:
# Problems and potential solutions related to improved water-pumping/water lifting in Kenya

by
Moses Sika
CRS/EAIO Regional Office, NAIROBI

March, 1987

## Summary of Contents

1. Introduction

2. General information on water resource in Kenya

3. Problems and Potential solutions related to improved water-pumping/water lifting in Kenya

   3.1 Problems related to improved water pumping

   3.2 Potential solutions to improved water pumping
   (i) Handpumps
   (ii) Wind Mills
   (iii) Solar Power

4. Conclusion

# Problems and Potential Solutions related to improved water-pumping/water lifting in Kenya

## 1. Introduction

Water is life. To stay alive in Africa today means having access to water. People will stay in a village with water but almost no food. They will leave a village with some food but no water. Without water development is unthinkable.

In Kenya only 30% of the population of about 20 million people have access to safe drinking water. The seriousness the Government pays to acute water problems led to the creation of the Ministry of Water Development in 1974. This Ministry was charged with the responsibility of maintenance, development and conservation of water resources.

In trying to meet water needs in Kenya the Government set an ambitious goal of supplying the entire population and livestock with safe water by the year 2000. To accomplish the above set goal within the frame time is of course an arduous task considering the present 30% coverage and the high rate of increase of population.

In Kenya many strategies have been put into operation by the Government to achieve the above goal, but this will require capital, manpower and technology, all of which are limited in one way or another.

## 2. General information on water resource in Kenya

Before embarking on the problems and solution related to improved water pumping in Kenya, I think it is important to briefly outline the available water resources in Kenya.

Kenya is endowed with vast quantities of water resources. Nearly 24.6 billion m3 of water runs into the Indian Ocean and into the lakes annually and this amount of water is equivalent to 5% of Kenya's total rainfall of 487 billion m3 annually.

Out of 487 billion m3 of water Kenya receives annually nearly 23% is taken by evaporation and transpiration, 5% runs into the Indian Ocean and lakes while the remaining 2% is the only amount available to recharge the ground water reservoirs.

The present water consumption in Kenya may be categorized only as that used to satisfy the rural and urban demands and for irrigation. In 1978 an estimated 0.36 billion m3 was consumed by the urban and rural population while 0.43 billion m3 was used for irrigation. According to Dr. George Angwenyi's estimate, Kenya has an approximate of 16 billion m3 of ground water resources. The total estimated abstraction of ground water is about 0.36 billion m3 annually is equivalent to 0.02% of the total ground water reserve in the country.

## 3. Problems and potential solutions related to improved water pumping/water lifting in Kenya

### 3.1 Problems related to improved water pumping

The question many people will ask is why should there be water problems in Kenya if we have more water than we need as has been indicated in the previous chapter.

In Kenya 83% of the country lies in a zone of less than 750 mm rain annually. This amount of rain is less than the evaporation demand which ranges from 1,450 mm to 2,100 mm annually and hence 83% of the country, representing 483,820 Km2 is arid and semi-arid. Obviously the remaining 17% of the country with abundant water resources attracted a larger population with the end result of land carrying capacities being exceeded.

The government with the help of outside donors providing grants and loans embarked on rural and urban water schemes to serve as many people as possible with clean safe water. This obviously involved the abstraction of surface water which in many cases had to undergo full water treatment and also involved pumping so as to cover as many people as possible. These schemes are of course expensive and involve high costs of operation and maintenance. Different imported machinery and equipment found their way into the country depending on the donor agency. Spare parts were not available locally and to add salt to the wound the energy crisis reached its peak with oil prices soaring high. It has become expensive to run the grandiose water schemes with complicated pumping equipments, the spare parts of which are not available locally. The meagre available foreign

exchange cannot be used to purchase spare parts for water pumps because agricultural equipment takes priority. The problem is that in developing countries, 98% of their water is in domestic sector, while in developed countries emphasis is more in industry and agriculture which means that investment in water in most developing countries, Kenya not being an exception, has very, little economic return. In Kenya, according to government policy of making clean water affordable to the rural areas, the water use tariff for rural water schemes is fixed at a flat rate of about US $1.00 per month per water connection. As an example, in 1981, the total estimated cost of rehabilitating a particular rural pumping scheme in Rift Valley Province was Kshs. 13.9 million (US $870,000) to serve 4,000 people through 140 connections. This represents a capital investment of US $217.5 per person. The project duration was 1 year. This means that after the completion of the project the revenue to be earned from the consumers was US $12.0 annually per connection thus US $1680 total annual revenue. The average annual cost for running the same scheme was US $13,000 and other expenses on spare parts, chemicals, transport has not been taken into account. This case clearly supports my earlier argument that investment in water has very little economic return.

What lessons do we have to learn from our past experiences which need to be carefully considered when planning for improved water pumping schemes:

a) Water supply technology is often transferred without any serious consideration of its appropriateness to local conditions. This has led to serious maintenance problems.

b) Inappropriate technology often leads to disproportionately high costs. It is essential to reduce costs if entire populations are to be served.

c) Projects are often undertaken without any reference to what the community feels it needs. Little community participation is attempted during planning, implementation and maintetenance.

## 3.2 Potential Solution to improved water pumping

I wish to refer to the previous chapter on available water resources in Kenya. Only about 0.02% of the available ground water resources is currently under exploitation. There has been a tendency of exploiting surface water resources which more often than not are polluted and require expensive water treatment plants not to mention the chemicals required.

The main reason that planners give for choosing a surface water project over ground water is cost, but in most cases no full-scale feasibility studies are undertaken on both ground and surface water resources to justify the the above notion.

Other factors being constant, ground water have the following advantages:

a) Cuts the cost of storage space
b) Makes water available near to the consumer
c) Ground water projects are small-scale and this enhances community participation
d) Ground water sources, if properly developed and equipped have a lower risk of pollution.
e) Complicated water treatment installations are not needed and hence capital costs are very much reduced.

After developing the above theory of exploiting the ground water sources, the immediate question in mind is how to abstract this water at a reasonable cost using appropriate technology. There are three ways of abstracting ground water in Kenya worth considering as follows:

(i) Use of hand pumps
(ii) Use of Wind mills
(iii) Use of Solar power pumps

250

(i) Hand pumps

Hand pump is a catch-word these days for low cost water projects. The main objective of hand pump introduction was to provide the rural communities in developing countries with a reliable means of lifting underground water. This water lifting device was expected to have the following characteristics:

a) Low cost production costs
b) Long life under severe conditions
c) Easy to maintain with simple tools and unskilled labor
d) Suitable for shallow and deep well installations with only minor changes
e) Capable of being manufactured by established firms within the developing countries and with a minimum capital investment
f) Easily operated by small people, including women and children
g) Includes design features which will discourage damage and vandalism.

Hand pump water projects are now gaining popularity in Kenya as the cheapest and most reliable way of improved water pumping. A case at hand worth mentioning is the Kenya-Finland Rural Water Development Project in Kenya's Western Province. This project begun in 1981 and is being carried out by KEFINCO (formed by YIT General Engineering and Contracting Company and Finnconsult) working under the supervision of the Ministry Water Development. This project has an annual budget of US $ 2.2 million and is being implemented by a team of 200 to 300 project workers composed of Kenyan nationals. The emphasis is on thorough preliminary investigation, programmed development in prospecting for water and the vital ingredient, a high level of community involvement.

Before the project began 99% of the population relied on rivers, springs and a few private wells. The ground water resources were virtually unexploited although an investigation carried out over a 2-year period showed them to be plentiful. This particular project decided to concentrate on spring protection and hand dug and drilled hand pump wells. To date 900 hand pump wells have been constructed and fitted with hand pumps which are working so well. What really is the secret behind this success?

The local manufacture of hand pump has revolutionized this project. Local manufacture of hand pumps began in 1983 when the first India MK II was completed at the Western College for Arts and Applied Sciences at Kakamega. Local manufacture offers big advantages over importation due to prompt modification, continuous development, flexible delivery, generation of employment and technology transfer. Spares are available locally and the greatest advantage is that no fuel or oil energy is needed.

(ii) Windmills

Windmills are becoming common in Kenya to provide water both for irrigation and domestic purposes. Their use is only limited to the availability of sufficient wind to run the wind pumps. In general, if an average wind speed of more than 3 m/s is available, wind pumps are likely to be an economic way of pumping water. Referring to the contour map of Kenya showing average annual wind speeds, (see Annex 1) the potential of using windmills as a potential solution to improved water pumping is high. As an example, the cost of installation of a wind- mill and pump capable of delivering up to 12,000 liters per day to serve 600 people is approxi- mately US $8,500. This gives a capital investment of US $14 per person with very low operation and maintenance costs.

There are several wind pump manufacturers in Kenya, all wholly Kenyan owned. This local manufacture of wind pumps is a great advantage to purchasers because they can be assured of the availability of spare parts, training of operators and assistance with installation or repair if necessary. It is very important to have good wind speed data when planning to install a wind pump.

A wind pump costs very little to run because the wind is free and the maintenance requirements are minimal. Although the initial capital cost of a windmill might seem high, the total capital cost plus the operation and maintenance cost over 10 years compared to a diesel driven pump is significantly cheaper.

(iii). Solar Energy

The use of solar pumps is a new technology which has not been mastered well in the developing countries. The idea of using solar energy which is in plentiful supply in East Africa throughout the year is creating a lot of interest in solar pumps. But the high capital cost of solar cells is a stumbling block to the whole concept of solar pump. Just as I mentioned before, the technology is new and one has to question the rationality of the introduction of solar pump concept as an appropriate technology at present, if the motive behind it is not commercial. There are a few solar pumps in Kenya although the concept is admirable. A small solar pump for an individual costs around US $5,000 in Kenya and not many communities can afford this.

4. Conclusion

I have attempted to highlight the problems and possible solutions to improved water pumping in Kenya but in conclusion I wish to stress certain issues that must be seriously considered if the use of appropriate technology is to yield better results. The participation of the communities involved in planning, implementation and running of water project is of paramount importance. The introduction of appropriate technology which can be understood and be manufactured locally will tremendously reduce the capital cost of water projects if we have to move anywhere near the achievement of the 1981-1990 UN declared International Drinking Water Supply and Sanitation Decade and also to improve food production through irrigation.

## Reference


1. Water, Sanitation, Health for All,
   by Anil Agarwal
   James Kimondo
   Gloria Maremo
   John Tinker

2. Action Peace Corps -Wells Manual,
   1974 publication

3. World Water Magazine, November 1986

4. World Health Magazine, December 1986

5. Speech delivered to Third International Exhibition and Conference for Water and Sewage Treatment Industries Serving Africa by Director of Water Development Mr. H.K. arap Rotich, February 1987

6. Waterlines Vol. 1 No. 3, January 1983

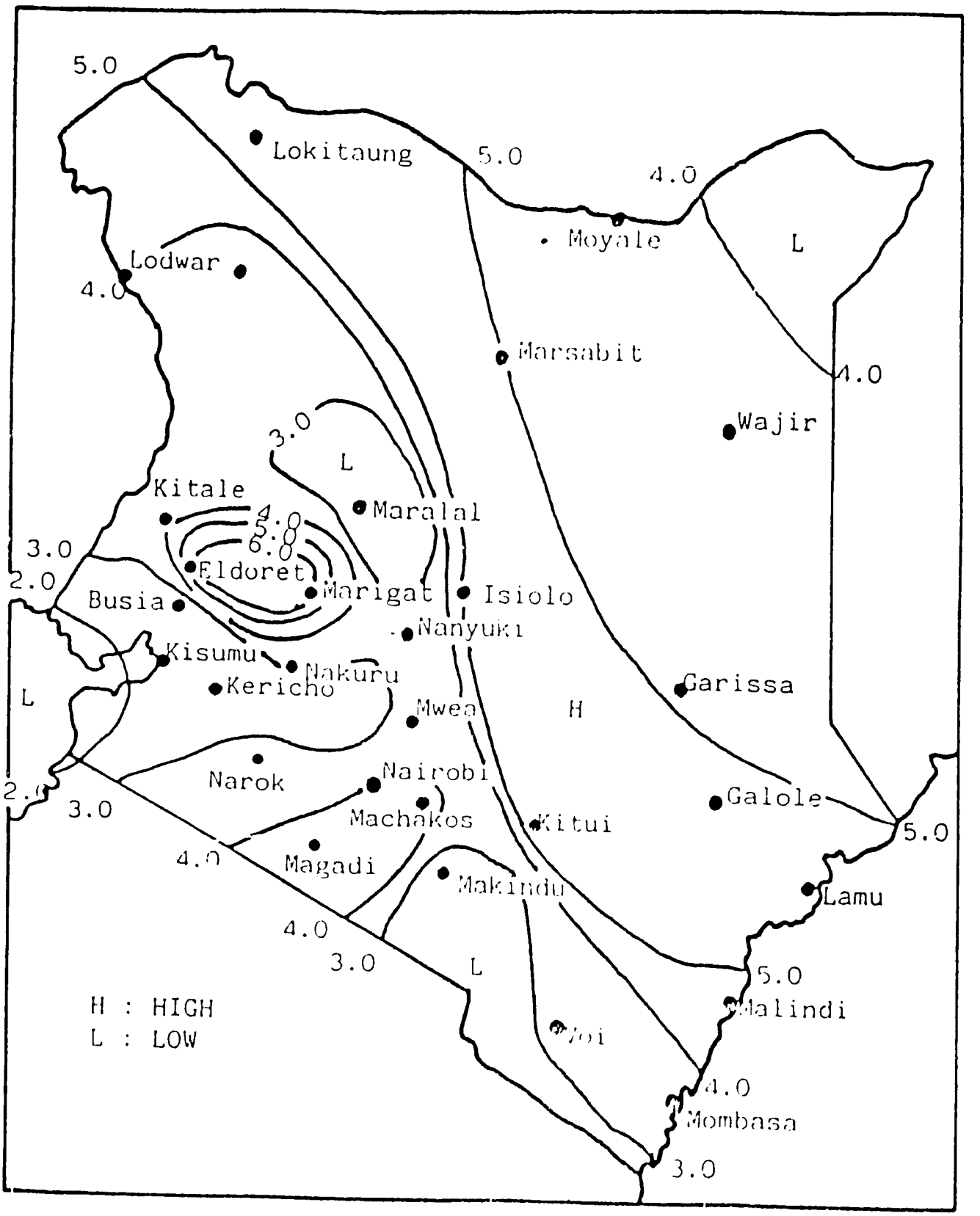


A contour map showing average annual wind speeds in Kenya. [m/s]

256

# PERSPECTIVES FROM THE ASIA REGION

# ON WATER PUMPING/WATER LIFTING ISSUES

by J.K. Campbell

First, a few facts - here in Gaborone, the average rainfall is 530 mm/year, but it ranges from 270 to 910 mm. When one mentions Asia and particularly Southeast Asia, irrigation comes to mind with scenes of rice paddies on the one hand and extensive irrigation of dry land areas in Pakistan and India on the other.

In Asia, water lifting and water pumping are primarily perceived in regards to irrigation. A wide number of types of energy as well as water lifting devices are currently in use. These range from manual-powered swing baskets and treadle pumps- of about 0.8 liters/sec in Bangladesh; river current-powered water lifting wheels in Sumatra; animal-powered axial-flow low-lift pumps in Thailand; electric-powered pumps on shallow tube wells in India; to diesel-powered deep well turbine pumps - 25 hp and 55 l/sec. In Asia these water-lifting devices and energy sources are in everyday use by farmers because a particular power and water-lifting device or pump is economically feasible in specific farming systems.

There is also a great number of studies by various donor agencies as well as institutions such as the Asian Institute of Technology in Bangkok, the International Rice Research Institute in the Philippines, the International Irrigation Management Institute in Sri Lanka, etc.

Devices such as the swing basket and the river-powered water-lifting wheels have been used for generations while other devices such as the axial-flow low-lift pump was first made in 1941 in Thailand and the treadle pump was first made in 1980 in Bangladesh. The axial-flow propeller pump is an interesting low-lift (1-3 meters) pump. It is simply a tube with a propeller at the intake end and an engine at the output end of the tube.

A 4 hp diesel engine powering a 15 cm diameter pump lifts about 30 l/sec at a 3-meter lift. In 1985, such pumps were being manufactured in the Philippines. The selling price of US$42.00 (engine not included) includes a 25% manufacturing overhead plus a 33% mark-up for profit to the sales organization.

As has been stated by others today, for an effective use of pumps and water-lifting devices, it is essential that there be maintenance and repair facilities. I believe that as far as is possible, pumps and water-lifting devices should be manufactured

in-country in order to develop an infrastructure to support an effective use of mechanical devices. Machines built with simple tools can be repaired with simple tools.

Manufacturers in Asia range from the primitive to the very sophisticated. Much can be learned from the study of how small manufacturers have modified imported designs in order to produce equipment in simple foundries and fabrication shops. In like manner, there are many documented examples - failures as well as successes - of irrigation projects.

Perhaps I have made it sound that all one needs to do is to tap the storehouse of information and equipment in Asia. But as we know, it is not this simple when transferring equipment and systems across agro-climatic regions and very different societies.

It is not usually the water-lifting device or the hydraulic characteristics of a water-distribution system which usually determines if a system will be successful. These are basic design requirements which can be constructed. But, frequently it is the local social relationships of those using the system, the availability of maintenance and repair facilities to service equipment, and the value of the crops produced which determine success or failure.

The value of the crops produced on irrigated land is, in the long run, one of the most important factors in the success of a system. Perhaps we should not think in terms of intermediate or high technology, but affordable technology. How many annual crops are required to pay for the equipment?

A study made by Gee Clough of the Asian Institute of Technology revealed why some countries exhibit much mechanization and others, little. For example, to purchase a 7 hp powertiller, the average Japanese farmer needs to spend only 1/10 of his annual rice crop; the Philippine farmer will need to give 2 rice crops, while the Indonesian farmer needs to pay 9.7 crops.

Yes, Asia is not Africa, but I do believe that Asia has a rich lode of water pumping/lifting devices, experience in local manufacturing, and technoogy transfer information, as well as many models of organization for water distribution.