PHYSICAL MEASUREMENTS IN FLOODED RICE SOILS

The Japanese Methodologies

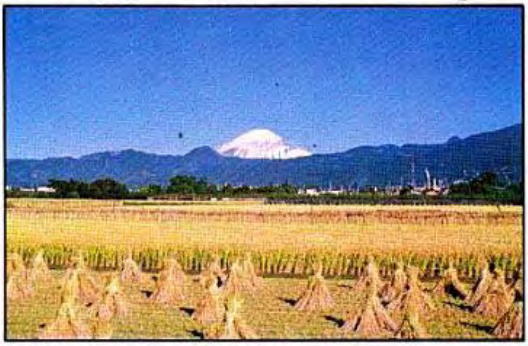

International Rice Research Institute

Copyrighted material

PHYSICAL MEASUREMENTS IN FLOODED RICE SOILS

The Japanese Methodologies

1987
International Rice Research Institute
Los Baños, Laguna, Philippines
P.O. Box 933, Manila, Philippines

The International Rice Research Institute (IRRI) was established in 1960 by the Ford and Rockfeller Foundations with the help and approval of the Government of the Philippines. Today IRRI is one of the 13 nonprofit international research and training centers supported by the Consultative Group on International Agricultural Research (CGIAR). The CGIAR is sponsored by the Food and Agriculture Organization (FAO) of the United Nations, the International Bank for Reconstruction and Development (World Bank), and the United Nations Development Programme (UNDP). The CGIAR consists of 50 donor countries, international and regional organizations, and private foundations.

IRRI receives support, through the CGIAR, from a number of donors including: the Asian Development Bank, the European Economic Community, the Ford Foundation, the International Development Research Centre, the International Fund for Agricultural Development. the OPEC Special Fund, the Rockefeller Foundation, the United Nations Development Programme, the World Bank, and the international aid agencies of the following governments: Australia, Belgium, Canada, China, Denmark, France, Federal Republic of Germany, India, Italy, Japan, Mexico, Netherlands, New Zealand, Norway, Philippines. Saudi Arabia, Spain, Sweden, Switzerland, United Kingdom, and United States.

The responsibility for this publication rests with the International Rice Research Institute.

Copyright © International Rice Research Institute 1987

All rights reserved. Except for quotations of short passages for the purpose of criticism and review, no part of this publication may be reproduced, stored in retrieval systems, or transmitted in any form or by any means, electronic, mechanical, photocopying, recording. or otherwise, without prior permission of IRRI. This permission will not be unreasonably withheld for use for noncommercial purposes. IRRI does not require payment for the noncommercial use of its published works, and hopes that this copyright declaration will not diminish the bona fide use of its research findings in agricultural research and development.

The designations employed and the presentation of the material in this publication do not imply the expression of any opinion whatsoever on the part of IRRI concerning the legal status of any country, territory. city, or area, or of its authorities, or concerning the delimitation of Its frontiers or boundaries.

ISBN 971-104-163-4

Contents

Preface **v**

Chapter 1 PURPOSE OF PHYSICAL MEASUREMENTS **1**

Chapter 2 SOIL PROFILE CHARACTERIZATION **5**

Chapter 3 THE SOIL'S COMPONENT PHASES **11**

Chapter 4 SOIL WATER PRESSURE **17**

Chapter 5 HYDRAULIC CONDUCTIVITY **23**

Chapter 6 MACROPORES **33**

Chapter 7 WATER REQUIREMENT AND PERCOLATION **35**

Chapter 8 FLOW RATE **49**

Chapter 9 BEARING CAPACITY **55**

Chapter 10 SURFACE RELIEF OF A RICEFIELD **63**

Preface

The Asian wetlands have produced enough rice to support large populations for centuries. Rice production in Asia has recently increased slightly more than population growth. The increases were mainly from lands with fertile soil and favorable climate, but there are now few opportunities for new development of such lands. In Africa and parts of Latin America, the increase in demand for rice exceeds the increase in production. Worldwide demand for rice is predicted to grow by an. annual rate of 3% for the next 15 years. The necessary production must be met by growing rice on lands where water is not well controlled, or soils are less fertile, or there are physical constraints such as compacted soil layers. Improved methods for soil and water management for ricelands must therefore be developed and adopted, both to increase food production and to avoid soil erosion and land degradation.

These issues and problems were addressed in a workshop on *Physical Aspects of Soil Management in Rice-based Cropping Systems* held at IRRI during 10-14 December 1984 and attended by 55 participants from 21 countries and by several IRRI staff members. The workshop was sponsored by the Belgian Government through its Agency for Cooperation in Development.

The workshop proceedings, published in 1985 as *Soil physics and rice,* include scientific papers and recommendations for future research, training, and coordination of programs in physical aspects of rice-soil science. Expansion and application of that science in the rice-growing countries requires accurate and standardized techniques of soil-physical measurement. Workshop participants recommended strongly that the existing Japanese methodologies of soil-physical measurement in flooded rice soils, developed over years of careful research, be published in English.

This book results directly from that recommendation. Ten authors from the Universities of Ibaraki, Nihon, and Tsukuba, and from the Japanese National Research Institute of Agricultural Engineering, wrote and translated into English the 10 component chapters that describe measuring methods relating to soil texture, structure, mechanics, and water. Editing was done by T. Tabuchi, S. Iwata, and S. Hasegawa of Japan and T. Woodhead and E. Maurer of IRRI.

The text is expected to find immediate application in rice research institutes, and will be used in Japan to support training programs for rice-soil scientists from the rice-growing countries.

M. S. Swaminathan
Director General

CHAPTER 1

Purpose of physical measurements

TOSHIO TABUCHI, *IBARAKI UNIVERSITY;* SHINGO IWATA, *NATIONAL RESEARCH INSTITUTE OF AGRICULTURAL ENGINEERING*

Physical measurements in irrigated and rainfed lowland rice soils include examination of soil profile, texture, structure, clay mineralogy, temperature, hardness, trafficability, consistency index, and surface cracks and relief; volumes of the solid, water, and air phases; soil air composition; soil water content, pressure, and flow; groundwater level and flow; rainfall, evapotranspiration, and water and heat balances (1).

Many of these measurements are the same as those used in dryland fields. However, those relating to soil water flow are different because flooding saturates the soil. We will discuss nine practical physical measurements which support research to increase rice yield, control water use, and improve drainage.

In research to increase rice production, scientists measure soil profile, texture, structure, and proportions of the three phases. Planning an irrigation project requires data on precipitation, evapotranspiration, percolation, and lateral seepage. In controlling water loss, it is essential to understand soil structure and texture, hydraulic conductivity, and water pressure distribution (3).

Percolation rate varies widely and is affected by several soil properties (2). Drainage improvement requires soil profile, surface relief, hydraulic conductivity, and macropore measurements. To help farmers who use large machines, researchers need to measure how soil physical properties affect bearing capacity.

CHARACTERISTICS OF FLOODED RICEFIELDS

Flooded and saturated soil

Lowland fields are usually irrigated by flooding, which keeps the topsoil saturated. This surface flooding causes several physical properties to differ greatly between wetland and dryland fields.

In Japan, farmers prepare land in the spring, flood and puddle the fields, then transplant rice (Fig. 1.1). During summer, they drain the fields for several days, then flood them again. Before harvest in well-drained fields with little rainfall, water drains away and the soil gradually dries and cracks (Fig. 1. la). In contrast, poorly drained fields with heavy rainfall remain wet (Fig. 1.1 b).

Flooding mainly affects three soil physical characteristics: degree of soil saturation, percolation, and surface strength (4). Puddled soils are saturated and of low strength, and gradually change to a reduced condition which greatly affects soil physical and chemical properties. Saturation during prolonged flooding also increases water loss by percolation, which is of concern in farm management. Measurements of soil hydraulic conductivity and macropores are very important for percolation control. Soft, low-strength soil also reduces trafficability, making it

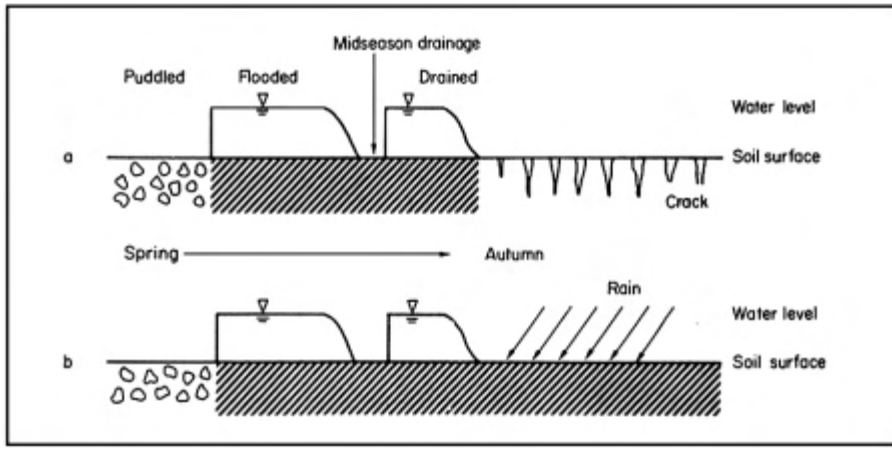

1.1. Seasonal changes of soil surface conditions in Japanese ricefields. a) welldrained in region with low rainfall, b) poorly drained in region with high rainfall,

difficult to use large machines for harvest and other work. Drainage during the harvest period needs to be especially effective.

Saturated and unsaturated flow

Flooded fields have two types of downward water flow because surface soils are saturated but subsoils may or may not be. Lowland areas with high groundwater levels will have saturated subsoils. Elevated fields or those with alluvial fans will have lower groundwater levels and unsaturated subsoils (Fig. 1.2).

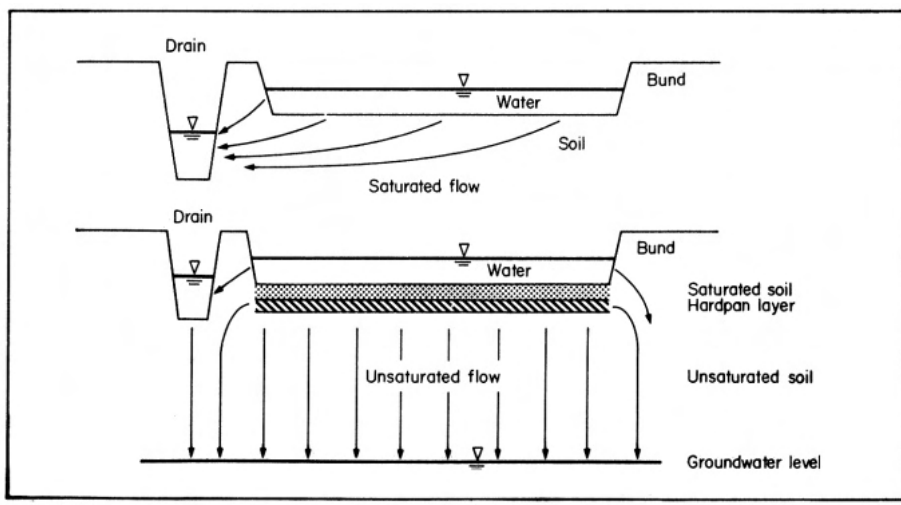

1.2. Percolation in saturated and unsaturated subsoils.

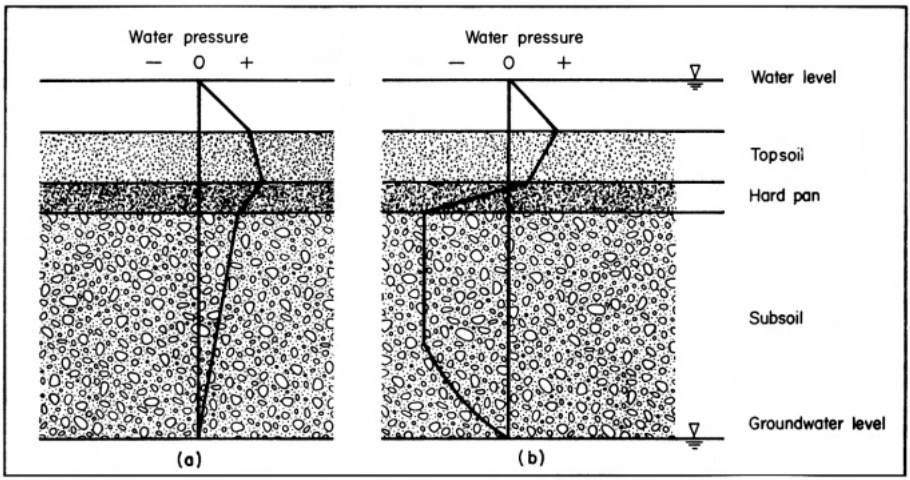

1.3. Water pressure distribution in saturated (a) and unsaturated (b) subsoils in flooded ricefields.

Water pressure distribution

Ricefields usually have layered soil profiles which include surface soil, a relatively impervious hard pan, and subsoil. Surface clayey soil also has low hydraulic conductivity after puddling so that the hydraulic gradient is larger in the upper than in the lower layer. Water pressure often is negative in the subsoil (Fig. 1.3). When the water pressure is less than the air entry value, soil becomes unsaturated and hydraulic conductivity decreases (5).

Because water pressure distribution is complex in flooded fields, it is necessary to measure pressure at several depths with a piezometer or tensiometer. A tube with many small holes along its length is often used to measure groundwater tables. But in flooded conditions, the water table measured by this type of tube does not indicate true groundwater level.

REFERENCES CITED

1. Committee on Measuring Methods for Physical Properties of Soil. 1976. Measuring methods for physical properties of soil [in Japanese]. Yokendo, Japan.
2. Editorial Committee. 1983. Experimental guide for physical and engineering properties of soil [in Japanese]. Trans. Jpn. Soc. Irrig. Drainage Reclam. Eng. 102:91-94.
3. Kaneko, R., ed. 1968. Planning and investigating land consolidation [in Japanese]. Upland Agricultural Development Association, Tokyo, Japan.
4. Nakagawa, S., M. Nakagawa, A. Matsumoto, T. Chiba, S. Iwamoto, K. Iwasaki, and Y. Matoba, eds. 1983. Advanced rice cultivation, irrigation, and drainage technology in Japan. Fuji Marketing Research Co., Ltd., Tokyo, Japan.
5. Yawata, T., T. Tabuchi, M. Nakano, and Y. Amemiya. 1984. Experiments for soil physics [in Japanese]. University of Tokyo Press, Tokyo, Japan.

CHAPTER 2

Soil profile characterization

ATSUSHI TADA. *UNIVERSITY OF TSUKUBA;* SHINGO IWATA, *NATIONAL RESEARCH INSTITUTE OF AGRICULTURAL ENGINEERING*

The profile of a rice soil has several layers or horizons. These differ by color, texture, structure, hardness, permeability, and the packing arrangement of particles. The morphological description of these characteristics is the purpose of the soil survey, and this description is one of the main components in classifying the soil (2).

The characteristics indicate both the physical and engineering properties of the soil and the environmental conditions such as subsurface water levels. Consequently, soil profile surveys are useful in understanding those physical properties that affect irrigation, drainage, and land improvement (1).

EQUIPMENT USED IN THE JAPANESE SOIL SURVEY

Equipment needed to examine soil profiles includes a scoop, garden trowel, soil-boring rod (Fig. 2.1), hammer, hand level, clinometer, scale, knife, pruning shears, camera, Yamanaka's soil hardness meter, soil color chart, bucket, polyethylene bags, string, marking pen, sampler, and a field sheet for the soil description. Chemicals include 0.2% α-α' dipyridyl to detect active Fe^{2+}, tetramethyldiaminodiphenylmethane to detect manganese dioxide, NaF reagent and phenolphthalein paper to detect active aluminum, and 10% solution of hydrochloric acid to detect carbonates, such as potassium carbonate and ferrous carbonate.

PROCEDURE

Site selection

Select a pit site that represents the area's typical soil profile, microtopography, vegetation, soil movement from land reclamation, and proximity of irrigation and drainage canals. Before digging a pit, use a soil-boring rod or a post auger to conduct a preliminary investigation.

Dig a rectangular pit 0.7-1.0 m wide, 1.5-2.5 m long, and 1.0-1.5 m deep. Smooth a vertical wall of the pit with a garden trowel to observe the profile in its natural state.

Soil profile description

Describing soil profiles requires knowledge of soil science and practical techniques (3).

Horizons. Examine the vertical section of the pit and analyze the horizons, noting differences in soil color, texture, structure, packing arrangement, mottling, concretions, the gley layer, and so on.

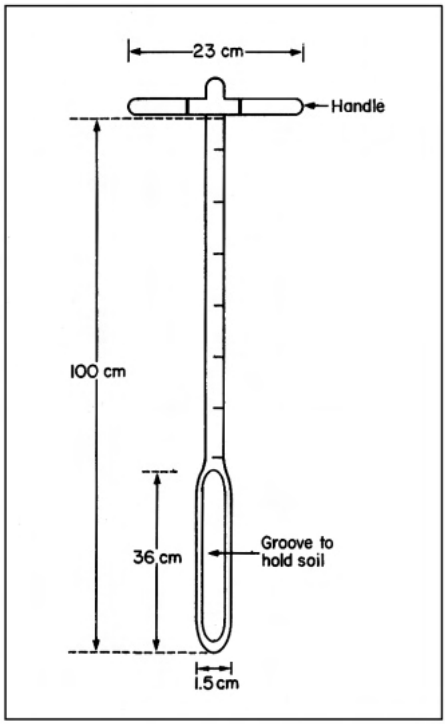

2.1. Sod-boring rod. (The rod is pushed into the soil to the required depth, then twisted and withdrawn so that soil from various depths and layers can be examined.)

Soil profile pedogenesis is divided into A horizon (eluvial), B horizon (illuvial), and C horizon (parent material). Subdivide the A horizon into A_0, A_1, and A_2..., B horizon into B_0, B_1, B_2 and so on. If these profile layers cannot be distinguished, either because of lack of knowledge or training or because the natural soil layers are destroyed, then divide the profile into layers numbered I, II, III, ... from top to bottom.

Record the presence of D horizon (different from parent material), G (gley), M horizon (muck), and P horizon (peat) if they appear in the section. If applicable, add Ap (plowed layer), Ac (plowsole), Bm (oxidized subsoil with mottles or concretions), and Bmg (gradually changed layer with oxidized subsoil and weakly gleyed layer with some mottles).

Describe the boundaries between different layers as: abrupt (boundary width <1 cm), sharp (<3 cm), clear (3-5 cm), gradual (>5 cm). Also use descriptions such as smooth, wavy, irregular, and broken.

Soil color. Judge the color of each layer in a fresh soil profile by comparing it with that shown in Munsell or other standard soil color charts.

Soil texture. Rub a sample of soil between your thumb and forefinger to classify approximately the texture and consistency as sand, silt, sticky, or plastic. To determine soil texture. more accurately, use particle size analysis (Table 2.1); and define the texture according to internationally agreed methods using a triangular diagram (Fig. 2.2). Table 2.2 helps classify gravel, stones, and rocks.

Table 2.1. Classification of soil particle size.

Classifying name	Size	Features
Gravel	> 2mm	Low moisture retention
Coarse sand	0.2-2.0 mm	Pore-water retention by capillary force
Fine sand	0.02-0.2 mm	At limit of visibility by naked eye
Silt	0.002-0.02 mm	Cohesive; crumbs may be made
Clay	< 0.002 mm	Colloidal characteristics

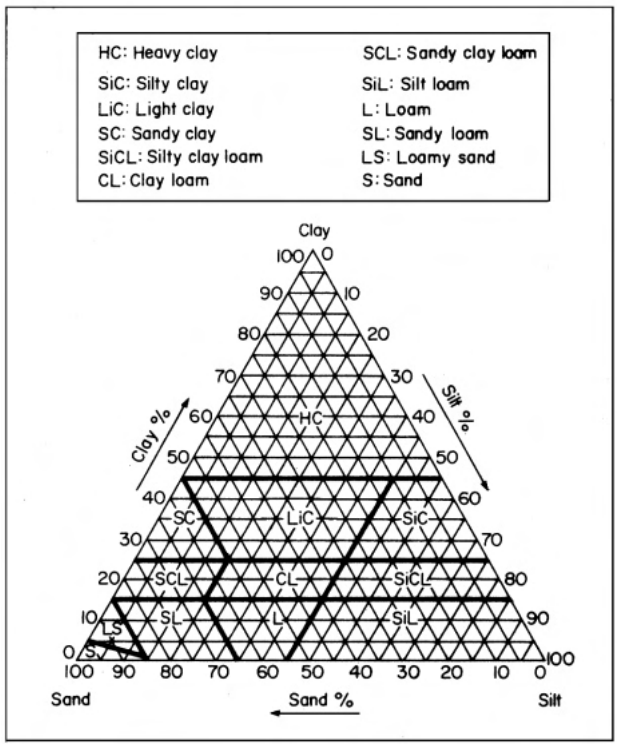

2.2. Triangular diagram of soil texture.

Table 2.2. Classification of gravel and stone [a] and of soil gravel content.

Gravel and stone [a]		Soil gravel	
Classifying name	Size	Classifying name	Area contributed by stones and gavel
Boulder	> 256 mm	Gravel soil	> 50%
Cobble	64-256 mm	Very frequent	20-50%
Pebble	4-64 mm	Frequent	10-20%
Granule	2-4 mm	Few	5-10%
		Very few	<5%

[a] Shape: rounded, angular, subangular.

Table 2.3. Field sheet for rice-soil description (3).

Prefecture _____

		Soil profile no.		Location												Farmer's name										Date.
		Land use		Weather at examination									Weather prior to examination			Topography, parent material (geology), mode of deposition										
		Slope	At inspection site													Around the site										
		Degree of erosion											Chief season of erosion			Conservation treatment for erosion										
Effective depth of soil	Thickness of plow layer	Boundaries Profile sketch	Depth	Sample	Color		Humus Peat, Muck	Mottles Concretions	Gley spots Gley horizons	Texture	Gravels	Structure	Pores	Hardness when dry	Compactness	Plasticity	Pans Consolidated bedrocks Their firmness	Stickiness	Water permeability	Moisture Welling water table	Root distribution	Remarks				
					Moist	Dry																				
			0 cm																							
			50																							
			100																							
		Growth of crops (plants)															Damage occurrence Growth of weeds									
		Remarks										Soil series							Surveyor							

Soil structure. Assess soil structure by breaking a piece of soil by hand. The shapes of broken soil determine soil structure as single grained, massive, angular blocky, subangular blocky, granular, crumb, columnar, prismatic, or platy.

Humus. Humus affects the porosity, structure, and consistency (physical properties) of the soil. If moist soil layers are blackish, they contain a considerable amount of humus. Classify the humus content of soils as: humus soil (>20% humus), very high (10-20%), high (5-10%), low (2-5%), and very low (<2%).

Peat. Peat affects soil water retention and permeability and subsidence of soil surface. The type of material and its percentage concentration in the exposed pit wall area determine the classification of peat soils. Concentration defines soils as peat (almost all), peaty (50-75%), rich (25–50%), and low (<25%). Peat types are low-moor peat, transitional-moor peat, and high-moor peat.

Muck. Muck is a mixture of inorganic matter and peat which has decomposed to the extent that the tissue is not visible.

Mottles and concretions. Surveys of mottles and concretions are important to show oxidation and reduction environments in ricefields affected by ground and irrigation water. Mottles and concretions consist of iron oxide, magnesium oxide, and ferrous carbonate. Their shapes are filmy, tubular, and thready, and their appearances are cloudy and speckled mottled. They are classified by the percentage of the pit wall area they occupy: many (>20%), common (2-20%), and few (<2%).

Gley spots and gley layer. Greenish gray or bluish gray layers caused by free ferrous iron appear in poorly drained, heavily reduced soils. Identify them by spraying dipyridyl solution (1 g of α-α' dipyridyl dissolved in 500 ml of 10% acetic acid free of Fe^{2+}) and observing the color — in a reduced layer, the color turns reddish. When 60% or more of the layer's surface area shows this color reaction, the layer is called a gley layer; it is unfavorable for rice and needs improvement.

Other survey characteristics. Describe other soil properties such as size, quantity, and continuity of pores and cracks, soil hardness, compactness, wetness, plasticity, and stickiness.

Sampling for laboratory tests

To investigate physical, engineering, and chemical properties in the laboratory, take samples of both disturbed and undisturbed soil from each horizon.

Records and tabulation

Arrange and record characteristics on a field sheet (Table 2.3) and, if necessary, add other indexes related to the physical, chemical, and engineering properties of the soil.

Notes

Pay special attention to mottles caused by oxidation and reduction and note their location and changes within the year. When planning an irrigation or a drainage project, investigate the quality, distribution, size, and continuity of cracks. To predict the trafficability of the soil, check the bearing capacity or the hardness of the soil profile.

CHAPTER 3

The soil's component phases

JUTARO KARUBE, *IBARAKI UNIVERSITY*

Soil consists of three phases — solid, liquid (water), and gas (air). The distribution of the soil's components among the three phases indicates physical conditions, such as packing of particles and water content (1). Proportions of the three phases are expressed as percentages by volume.

PROCEDURE FOR DETERMINING PROPORTIONS OF SOIL PHASES

Field equipment

For field sampling, items needed include a 100-ml steel cylinder, 5.1 cm long and 5.0 cm diameter, with caps on both ends; a cylinder holder (Fig. 3.1); wooden hammer; spade; bucket; tape measure; spatula; scissors; sticky vinyl tape; marking pen; vinyl bag; string; and grease or oil.

Laboratory equipment

For laboratory measurements, items needed are a balance with a sensitivity no lower than 0.1 g and a capacity of more than 300 g, an oven to keep soil samples at the constant temperature of 110 °C, and a desiccator with desiccant.

Principles

Figure 3.2 shows the relationships of volume and mass for the three soil phases. The following equations express the quantitative interrelations of these three phases.

Total (wet) bulk density: ρ_t (t/m^3 or g/cm^3)

$$\rho_t = m_t / V_t$$

(massmetric) water content: w (%)

$$w = 100 \cdot (m_w / m_s)$$

Density of solids: ρ_s (t/m^3)

$$\rho_s = m_s / V_s$$

or relative density of solids: d_s (= specific gravity : G_s)

$$d_s = \rho_s / \rho_w$$

where ρ_w is density of water

Dry bulk density: ρ_d (t/m^3)

$$\rho_d = m_s / V_t = \rho_t / (1 + w)$$

Porosity: n(%)

$$n = 100 \cdot (V_v / V_t) = 100 \cdot (1 - \rho_d / \rho_s)$$

Voids ratio: e

$$e = V_v / V_s = (\rho_s / \rho_d) - 1$$

Degree of saturation: S_r (%)

$$S_r = 100 \cdot (V_w / V_v) = w \cdot \rho_s / (e \cdot \rho_w)$$

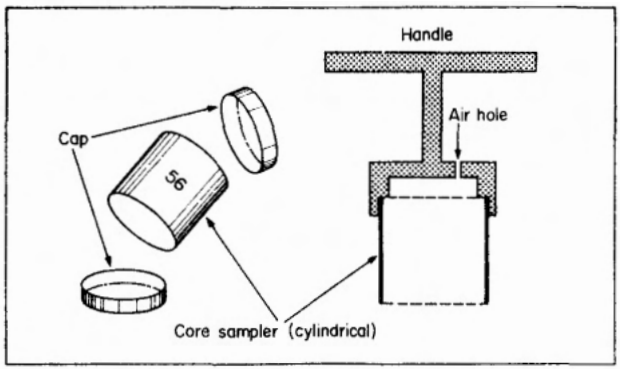

3.1. To take undisturbed soil sample, sampling cylinder (with identifying number) and cylinder holder are used.

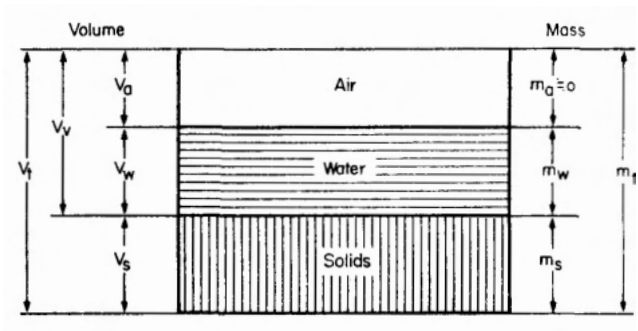

3.2. Three-phase system of soil.

If the values for three of these physical quantities are known, for example, the total bulk density, the water content, and the density of solids, the others can be calculated.

These terminologies define the three-phase distribution as follows:

Percentage of solid phase: $100 \cdot (V_a/V_t)$ (%)

$$100 \cdot (V_s/V_t) = 100 \cdot (\rho_d/\rho_s)$$

Percentage of liquid phase: $100 \cdot (V_w/V_t)$ (%)

(also called volumetric percentage water content)

$$100 \cdot (V_w/V_t) = 100 \cdot (\rho_t - \rho_d)/\rho_w$$

Percentage of gaseous phase: $100 \cdot (V_a/V_t)$ (%)

$$100 \cdot (V_a/V_t) = 100 - 100 \cdot (V_s + V_w)/V_t$$

Procedure

Total (wet) bulk density can only be determined from undisturbed soil samples. But massmetric water content and density of solids can be measured using disturbed soil samples.

Field sampling.

1. Preweigh the empty sampling cylinders (mass, m_0), including both end caps, and grease or oil the insides of the cylinders.

2. Using the results of soil profile surveys, decide on the field sampling sites. Level the soil surface and attach a cylinder to the cylinder holder. Holding the cylinder vertically, insert it gently into the soil layer until the soil surface just emerges from the cylinder. If the soil surface is flooded, enclose the sampling site with boards and remove the surface water with a bucket. If the soil is too hard to push the cylinder in, tap the top of the cylinder holder with a wooden hammer, taking care not to disturb the soil structure.
3. Dig out the cylinder and the soil around it with a spade. Cut the surplus soil with a spatula and the plant root with scissors. Cap both ends of the cylinder, seal with tape, and mark the sampling site on the tape with a marking pen.
4. To sample for the density of solids, take a disturbed soil sample from the same layer and place in a vinyl bag.

Measuring the total wet bulk density. Remove the vinyl tape and any mud stuck to the cylinder and weigh the filled cylinder and both caps ($m_l = m_t + m_o$). The volume of the sample is known.

Measuring the water content. After measuring the total bulk density, remove the upper cap from the cylinder and dry the sample and cylinder in an oven at 110 °C until constant mass is achieved (about 24 h).

Cool the sample and cylinder to room temperature in the desiccator and then weigh the dried sample and cylinder with both caps:

$$m_2 = m_s + m_o$$

Measuring the density of solids. Measure the density of solids with a pycnometer. For a soil with little organic matter, assume a density of solids between 2.6 and 2.8 t/m^3, although humic andosols may have density of solids of only 2.4 t/m^3.

Calculation

Calculate the values of m_t, m_s, and m_w by using the equations

$$m_t = m_1 - m_0, \qquad m_s = m_2 - m_0, \qquad m_w = m_1 - m_2,$$

Then, calculate, as shown in Table 3.1, the values for the various masses, densities, and percentage phase volumes, using the equations in the *Principles* section.

Notes

If the water content was measured on a separate sample of disturbed soil, use the undisturbed sample to measure permeability or the water characteristic curve after determining the total (wet) bulk density. For this separate measurement of water content, use a weighing can with cap (Fig. 3.3).

To facilitate the permeability test, a 15cm-long cylinder can be used to take vertical samples about one-half the cylinder length (7.5 cm samples).

The sample will not reflect actual field conditions if the friction of the cylinder compresses the sample during sampling. Avoid sites close to a crack or to stubble.

Table 3.1. Data sheet and example for soil density and volumes of component phases.

Sampling site[a]		Ando ricefield	Notes
Sampling depth[a]	cm	10	
Cylinder[a]	no.	56	
Mass of cylinder[a]	m_0 (g)	97.4	
Can volume[a]	V_t (cm^3)	100.0	
Mass of wet soil + cylinder[a]	$m_1 = m_t + m_0$ (g)	236.9	
Mass of wet soil	$m_t = m_1 - m_0$ (g)	139.5	
Total (wet) bulk density	$p_t = m_t/V_t$ (s/cm^3)	1.395	
Mass of dried soil + cylinder[a]	$m_2 = m_s + m_0$ (g)	168.4	
Mass of water	$m_w = m_1 - m_1$ (g)	68.5	
Mass of solids	$m_s = m_1 - m_1$ (9)	71.0	
Massmetric water content	$w = (m_w/m_s) \times 100\%$	96.5	
Density of solids[a]	P_s (g/cm^3)	2.65	
Dry bulk density	$P_d = m_s/V_t$ (dm^3)	0.710	
Solid phase	%	26.8	
Liquid phase (volumetric water content)	%	68.5	
Gaseous phase	%	4.1	

[a]Data to be measured or recorded.

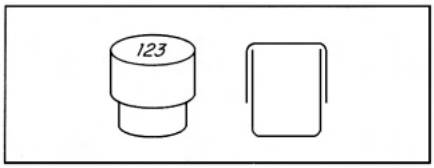

3.3. Weighing can for disturbed soil samples. volume about 40 ml, with identifying number.

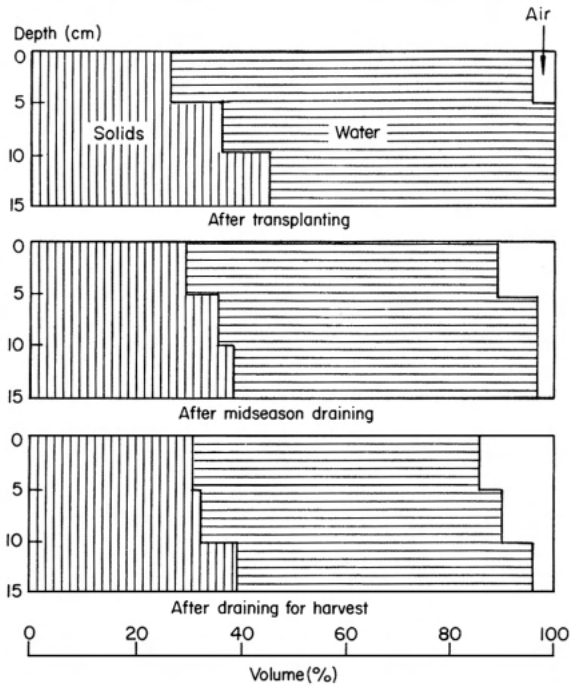

3.4. An example of the fraction5 (%) of three soil phases of a Japanese lowland rice soil (2).

Because of soil variability, three samples should be taken at each measurement site.

An example of the percentage fractions of the three soil phases for a Japanese lowland rice soil is given in Figure 3.4.

REFERENCES CITED

1. Editorial Committee. 1983. Experimental guide for physical and engineering properties of soil [in Japanese]. Trans. Jpn. Soc. Irrig. Drainage Reclam. Eng. 102:91-94.
2. Kohno, E. 1980. Seasonal changes in the physical properties of surface soil in paddy fields during the growing season after long-term fertilizer application [in Japanese]. Trans. Jpn. Soc. Irrig. Drainage Reclam. Eng. 86:9-18.
3. Yawata, T., T. Tabuchi, M. Nakano, and Y. Amemiya. 1984. Experiments for soil physics [in Japanese]. University of Tokyo Press, Tokyo, Japan.

CHAPTER 4

Soil water pressure

YUKIO TOYOMITSU, *UNIVERSITY OF TSUKUBA*

From Darcy's equation, if one knows any two of the three physical quantities (flow rate, hydraulic conductivity, or hydraulic gradient), the third can be determined (1). In the field, the hydraulic gradient is usually the easiest to determine by measuring total hydraulic head (pressure head + elevation head) at different depths.

If the soil water pressures are all positive, use the well-point (single- or double-tube) piezometer. When they can be either positive or negative, use the U-shaped tensiometer (2).

SINGLE- AND DOUBLE-TUBE PIEZOMETER METHOD

Equipment

To make and install a single-tube piezometer, the following items are needed: a polyvinyl chloride or steel tube with an inner diameter of 2.5 cm (Fig. 4.1); devices to detect the water level in the piezometer (Fig. 4.2,4.3); an auger, boards, a bucket, gravel, and a stick.

A design for a double-tube piezometer is shown in Figure 4.4.

Principle

By measuring the water level in a tube inserted to a point in the soil, soil water pressure can be determined at that point, provided that the system attains a soil water equilibrium.

Procedure

To install a single-tube piezometer, first surround the measuring site with boards and remove the enclosed water with a bucket. Then, using an auger with a diameter of 7.5-10 cm, dig a hole about 2.5 cm deeper than the measuring point. Pack the bottom of the 5cm hole with gravel 0.5-2 cm in diameter. Stand the tube on top of the gravel and refill the hole around the tube with clayey soil, then compact and mound the soil up around the tube to prevent surface water from running down the tube's outer walls (Fig. 4.1).

To install the double-tube piezometer, gently tap the outer tube and then the inner tube (Fig. 4.4) until the lower end of the inner tube is at the required depth of measurement.

After installing either type of piezometer, flood the surface soil. Begin measuring when the water level in the tube attains equilibrium with the field water.

Water level in a piezometer may be measured using a U-shaped vinyl tube that contains a small quantity of water and that is attached to a copper or stainless steel pipe (Fig. 4.2). Insert the pipe into the piezometer tube in the soil. When the tip of the

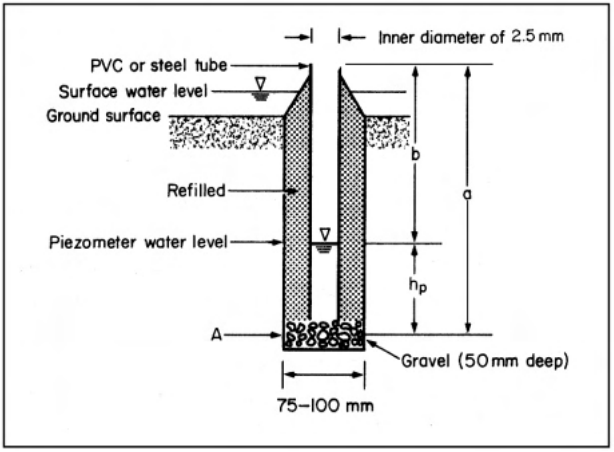

4.1. Measuring soil-water pressure using a well-point piezometer (PVC or steel, single tube).

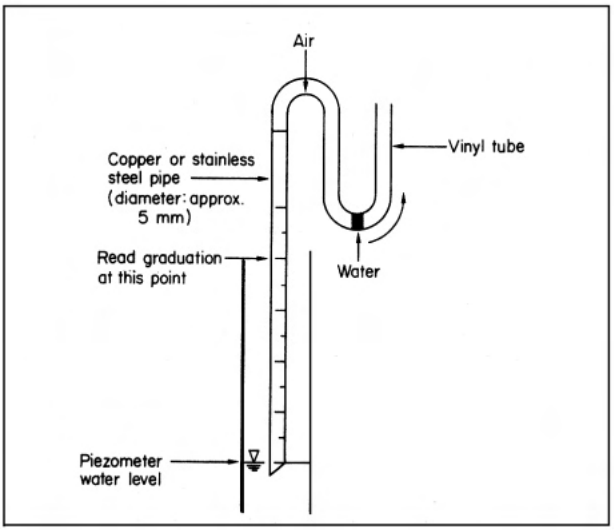

4.2. Measuring piezometer water level with a U-shaped fine tube.

pipe reaches the water surface, determine the water level by observing water movement in the U-shaped tube.

Figure 4.3 illustrates an electrical method of measuring the water level using an electrical conductivity meter. Fasten a television coaxial cable to a wooden ruler and connect the coaxial conductors to the meter. When the tip of the ruler reaches the water surface, there is a change in electrical conductivity across the lower end of the coaxial cable, and this change is detected by the conductivity meter.

Calculation

Calculate soil water pressure at the measurement point using the equation

$$h_p = a - b.$$

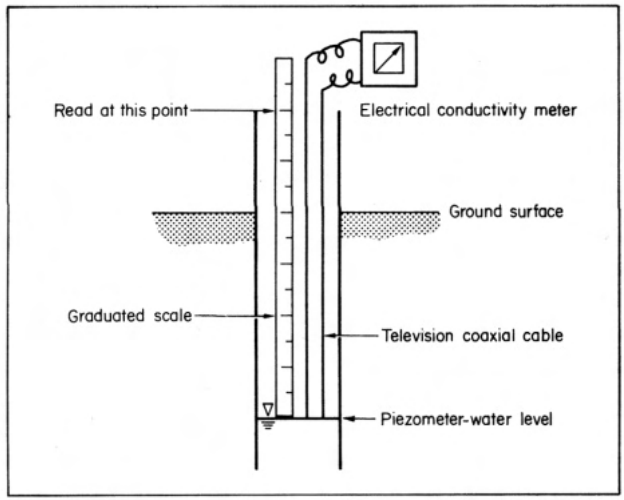

4.3. Measuring piezometer water level with an electrical conductivity meter.

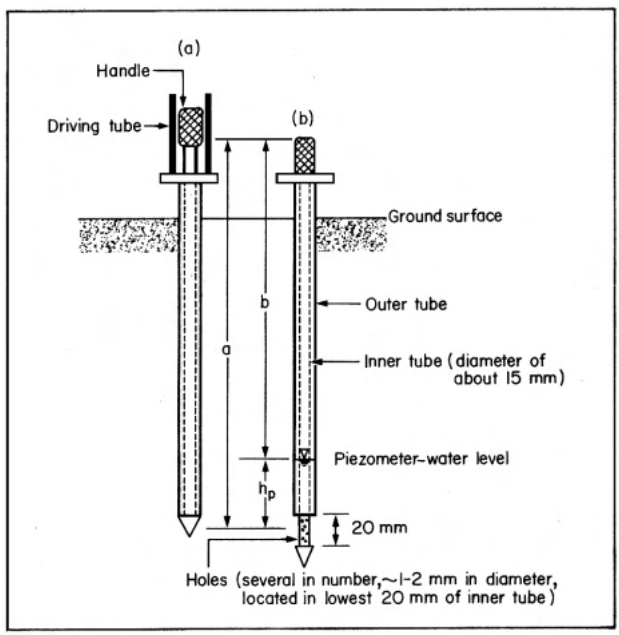

4.4. Measuring soil-water pressure with a well-point (double tube) piezometer.

The pressure head at the measured point is h_p (units here are cm water); a is the distance (cm) between the measured point and the upper end of the tube (Fig. 4.1); and b is the distance (cm) between the piezometer water level and the upper end of the tube. Enter calculations on an appropriate data sheet (Table 4.1).

A typical distribution of total and component pressures in a flooded ricefield is shown in Figure 4.5. The total hydraulic head, h_t, was determined by using

$h_t = h_p + h_e$

Table 4.1. Example of data sheet for soil-water pressure.

Place: _____
Time: _____
Observed by: _____

Well-point piezometer method:

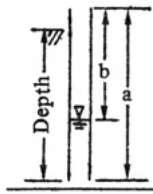

Depth (cm)	a (1)	b (2)	h_p[a] (3) = (1) – (2)	h_e (4)	h_t (3) + (4)

[a] h_p = Pressure head (cm water), h_e = Elevation head (cm water), h_t = Total head

U-shaped tensiometer method:

$$h_p = -\rho_m(\ell_1 - \ell_2) + \ell_1 + L \qquad \rho_m = 13.5\ (25\ ^\circ C)$$

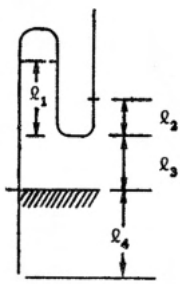

Depth ℓ_4	ℓ_3	L = $\ell_3 + \ell_4$	ℓ_1	ℓ_2	$\ell_1 - \ell_2$	h_p (1)	h_e (2)	h_t (1) + (2)

ρr_m is the relative density of mercury.

where h_e (cm water) is elevation head. If the ground surface is used as the reference elevation head (0 cm water), the elevation head at 50 cm below the ground surface would be –50 cm water. The total hydraulic head decreases with depth, indicating that the soil water flows vertically downward. From the distribution of total hydraulic head in a soil profile, the hydraulic gradient J can be calculated using the equation

$$J = (h_{t,i} - h_{t,i+1})/l_{i,i+1}.$$

where $h_{t,i}$ and $h_{t,i+1}$ are total hydraulic heads at measuring points i and i+1, respectively, and $l_{i,i+1}$ is the vertical distance between measuring points i and i+1.

Notes

- To exclude rainwater from the piezometer tube, keep the Pop covered.
- When measuring soil water movement over a wide area, establish a reference elevation.

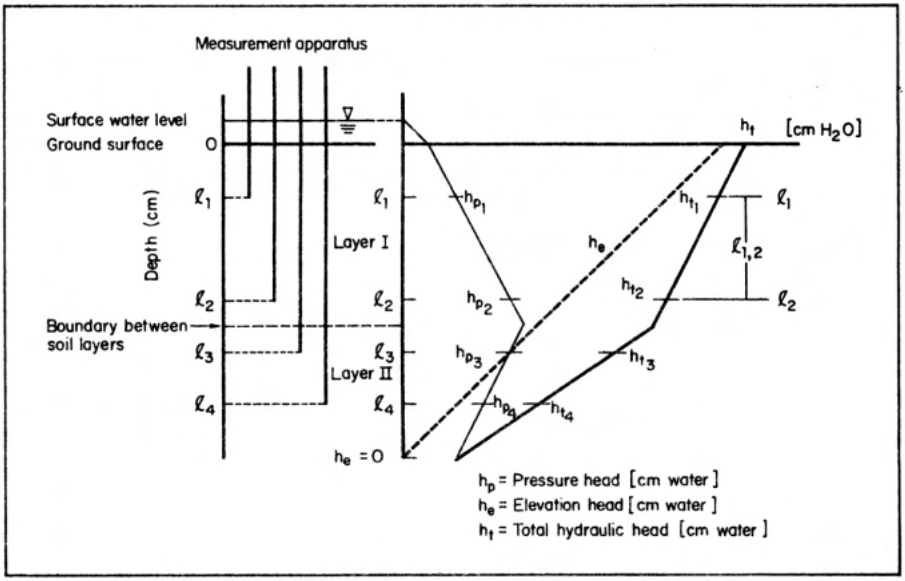

4.5. Typical distribution of soil-water pressure in flooded rice soil.

TENSIOMETER METHOD

Equipment

Figure 4.6 shows a design for a tensiometer. A porous ceramic cup is fixed to a water-filled tube that connects to a thick vinyl tube and an air trap. The trap is attached to a U-shaped capillary tube connected to a graduated scale constituting a mercury manometer. Other items include an auger and supplies of mercury and air-free water.

Principle

The interaction between the water in the ceramic cup and that in the soil may be understood by reference to Figure 4.6. If the water pressure in the cup is greater than that of the soil water, the water in the cup will flow out through the wall into the soil until both pressures are equal. If the water pressure is higher in the soil than in the cup, soil water will enter the cup until the pressures are equal. When both pressures are equal, soil water pressure can be measured by determining the water pressure in the cup, and this may be calculated from the mercury levels in the manometer.

Procedure

In the laboratory, presaturate the ceramic cup with air-free water. In the field, bore a hole to the depth of the measuring point. It should be slightly smaller in diameter than the ceramic cup. Slowly insert the ceramic cup and its connected tube into the hole, and fill gaps around the outside wall with soil to prevent surface water seepage, Fill the tube connected to the ceramic cup and the capillary tube above point B (Fig. 4.6) with water. and pass air-free water through the tubes and ceramic cup until no

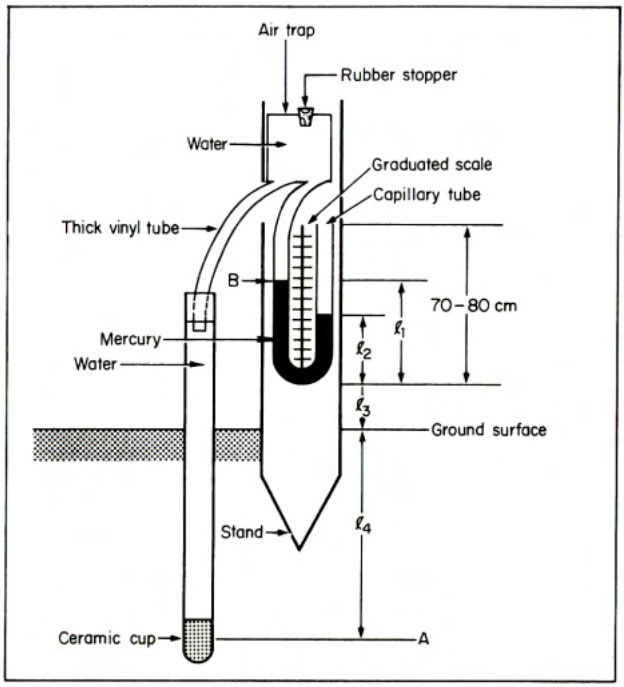

4.6. Measuring soil-water pressure with a tensiometer.

air bubbles remain. Measure the depth of insertion of the ceramic cup (l_4) and the height above ground of the lower edge of the mercury manometer (l_3, Fig. 4.6).

During operational measurement, read l_1 and l_2 from the graduated millimeter scale attached to the manometer stand.

Calculation

Calculate soil water pressure using the equation

$$h_p = -\rho_m (l_1 - l_2) + l_1 + l_3 + l_4$$

where r_m is the relative density of mercury.

REFERENCES CITED

1. Committee on Measuring Methods for Physical Properties of Soil. 1976. Measuring methods for physical properties of soil [in Japanese]. Yokendo, Japan.
2. Hasegawa, S. 1983. Methods of measuring groundwater level. Pages 354-363 *in* Advanced rice cultivation, irrigation and drainage technology in Japan. Fuji Marketing Research Co., Ltd., Tokyo, Japan.

CHAPTER 5

Hydraulic conductivity

SHUKHI HASEGAWA, *NATIONAL RESEARCH INSTITUTE OF AGRICULTURAL ENGINEERING*

The profile of a puddled rice soil contains a puddled layer, tillage pan, and subsoil.

The percolation rate is used to evaluate the permeability of the whole profile as shown in Chapter 7, while the permeability of the individual layers is measured by their individual hydraulic conductivities. By knowing the hydraulic conductivity of each layer, it is possible to identify the particular layer that effectively controls flooding and percolation.

Unlike in dryland soils, hydraulic conductivities in lowland ricefields (especially in surface layers) decrease significantly during irrigation and increase during dry periods. Puddling disperses soil particles and reduces percolation sufficiently to maintain flooding (2). Drying causes shrinkage cracks, and during rewetting, much water is lost before the soil becomes saturated. Once cracks form in the subsoil, flooding does not close them perfectly and they continue to drain water during nonflooded periods (3). Therefore, water movement in ricefields is influenced by puddled-layer micropores during the growing season and by subsoil macropores during nonsubmerged periods.

The hydraulic conductivity of a soil can be measured by laboratory or field methods. Conductivity for undisturbed soil samples and for puddled soils can be measured in the laboratory; conductivity for vertical flow under submerged conditions and for horizontal flow under dry conditions can be measured in the field.

Auger hole methods, which are widely used for dryland fields, are valid for the subsoil but are not suitable for the puddled layer and the tillage pan, which are too thin.

MEASURING HYDRAULIC CONDUCTIVITY OF UNDISTURBED SOIL SAMPLES

Equipment and sampling

Items needed include a core sampler (>5.0 cm in diameter), spatula, sticky vinyl tape, rag, spade, sampler driver, constant head permeameter (Fig. 5.1), falling head permeameter (Fig. 5.2), air-free water, stopwatch, graduated cylinder, wash bottle, tray, and filter paper.

Take samples for conductivity measurement by driving the core sampler vertically into the soil layer. To sample flooded soils, drive a 30-cm cylinder into the soil, draw out the excess water, then use the core sampler. Remove three to five samples from each layer, avoiding macropores such as cracks and pores formed by decayed roots.

Apply a heavy lubricant on the inside wall of the core sampler to ensure tight contact between the soil and sampler wall. Do not knead the surface of the sample when trimming it with the spatula. When soils are so hard that the core sampler does

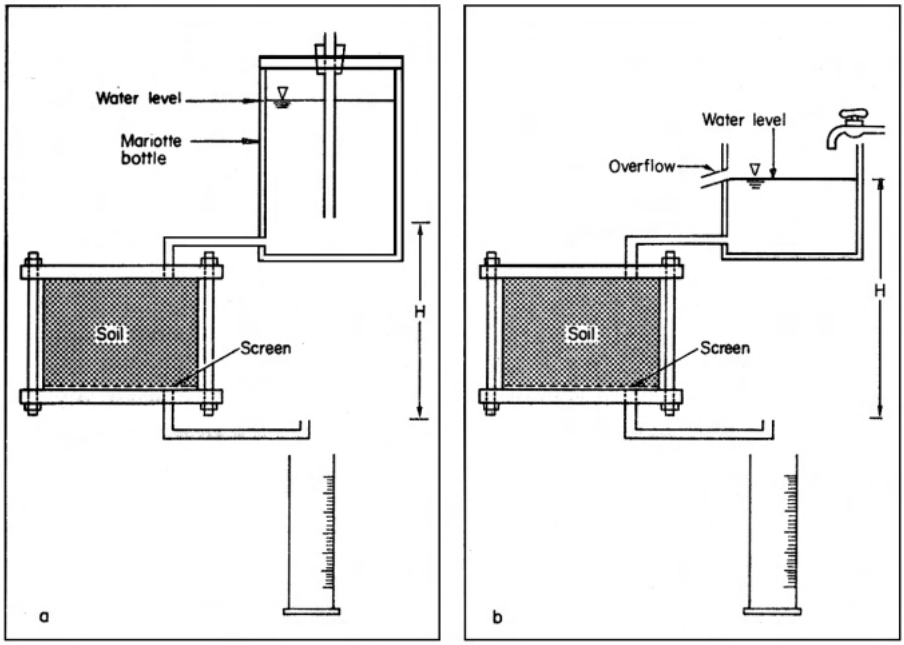

5.1. Constant head permeameter

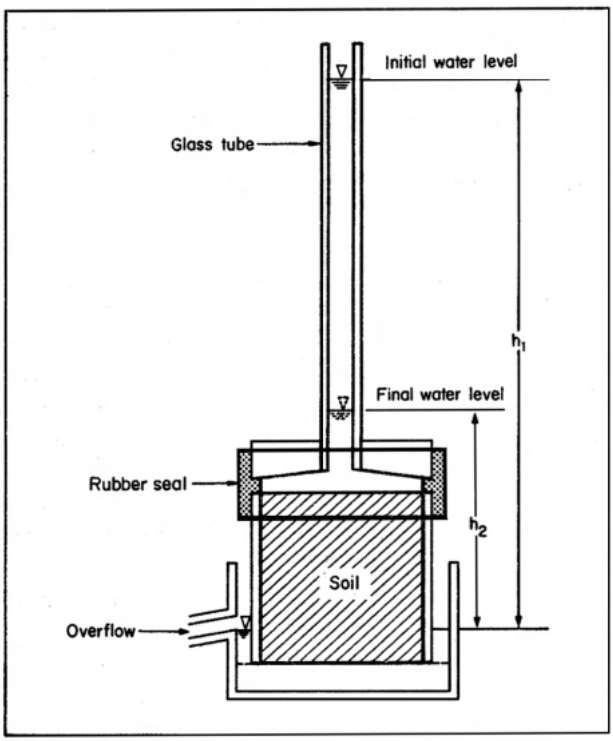

5.2. Falling head permeameter.

not penetrate sufficiently, use samples shorter than the length of the sampler. In that case, protect the ends of the samples from disturbance during transport by packing wet paper into the extra space in the sampler.

To take samples for measuring conductivity for horizontal flow, drive the sampler horizontally into the soil at the required depth from an excavated pit.

Principle

Darcy's law defines hydraulic conductivity. Use the constant head permeameter (Fig. 5.1) when hydraulic conductivity of the soil is expected to be higher than 10^{-3} cm/s, and the falling head permeameter (Fig. 5.2) for lower conductivities.

For the constant head method, calculate hydraulic conductivity using the equation

$$k = Q \cdot L / A \cdot t \cdot H$$

where k is hydraulic conductivity (cm/s), Q is volume (cm^3) of water collected in time t (s) of measurement, L (cm) and A (cm^2) are length and area of the soil sample, and H is difference of head (cm) between the inlet and the outlet.

For the falling head method, calculate hydraulic conductivity using the equation

$$k = 2.3 \{\log_{10}(h_1 / h_2)\} \cdot a \cdot L / A \cdot t$$

where h_1 is initial head of water (cm), h_2 is final head of water (cm), and a is area of stand pipe (cm^2). Use stand pipe of 0.6-1.0 cm in diameter when the soil sample is 5.0 cm in diameter and 5.1 cm long (100 cm^3 volume). In this version of the apparatus, h_2 and h_1 are 2.0 and 12.0 cm above the top of the soil sample.

Procedure

Saturating the samples. Saturate samples with water by capillarity or by vacuum. To saturate by capillarity, put each soil sample onto a filter paper and place on a sand bed, in a tray. Pour air-free water into the tray to a depth of a few mm below the top of the samples. Leave the samples for 24 h to soak up water.

For more effective saturation by vacuum, place soil samples on a filter paper in a tray, put into a vacuum desiccator, and apply vacuum not exceeding the boiling point of water. Pour water into the desiccator until the samples are covered, then readmit air.

With either method of saturation, remove filter paper before placing the sample in the permeameter.

Measurement by the constant head method. Either a Mariotte bottle (Fig. 5.1a), or an overflow reservoir (Fig. 5.lb), supplies air-free water at a constant pressure and the water flowing through the sample in a measured time (t) is collected and measured in the graduated cylinder. Measurements should be repeated three times or more.

Measurement by the falling head method. Pour water into the stand pipe to fill above the level h_1 shown in Figure 5.2 and determine the time, t, taken for the water to fall from h_1 to h_2. If it is likely to take more than a day, set h_2 to a level that water can pass from h_1 to h_2 within a few hours.

Notes

Place the core sampler vertically on the soil and push it hydrostatically into the soil. If the core sampler is hit too strongly, cracks and gaps often form between the soil and the sampler wall, giving inaccurate hydraulic conductivity values.

Do not use soil samples that were loosened from the sampler wall during saturation. Saturate sandy soil after the sample is in the permeameter by gradually increasing the water level at the outlet, causing water to flow upward into the sample.

Hydraulic conductivity is easy to calculate using a data sheet (Table 5.1). Table 5.2 shows typical values for hydraulic conductivity at various depths in a Japanese rice soil and compares the effects of the alternative methods of saturating the samples. In laboratory tests, hydraulic conductivities usually vary greatly among soil samples (Fig. 5.3); coefficients of variation can be several times 10% (1). When all values are similar, calculate arithmetic means. When individual values are very different, record their range and calculate geometric or harmonic means according to the experiment's purpose.

HYDRAULIC CONDUCTIVITIES OF SOILS PUDDLED IN THE LABORATORY

Equipment and sampling

To puddle soil in the laboratory, and then determine its conductivity, the following equipment is needed: a polyvinyl chloride (PVC) tube 15 cm long and a diameter larger than 20 cm, a 2.0-mm screen, a 5.0-mm sieve, a puddler with rotating nails or

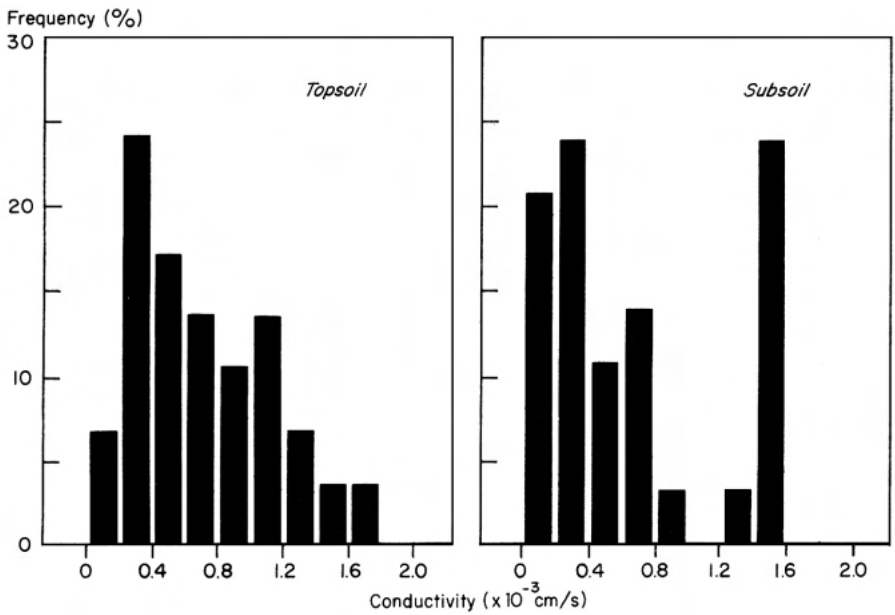

5.3. Frequency distribution of saturated hydraulic conductivity sampled at 10-m horizontal intervals in a ricefield (1).

Table 5.1. Data sheet for recording and calculating hydraulic conductivity.[a]

Diameter of glass tube (cm)_____	Area of sample, A (cm²)_____
Area of glass tube, a (cm²)_____	Length of sample, L (cm)_____
Diameter of sample (cm)_____	Total bulk density (g/cm³)_____

Test no.	1	2	3
Temperature T (°C)			
Time t_1			
Time t_2			
Elapsed time $(t_2 - t_1)$ (s)			
CONSTANT HEAD METHOD Head of water H (cm)			
$A \times (t_2 - t_1)$			
L/H			
Volume of water, Q (cm³)			
$Q/A\ (t_2 - t_1)$			
$k_T = (L/H)\ [Q/A\ (t_2 - t_1)]$			
FALLING HEAD METHOD Head of water at t_1 : h_1 (cm)			
Head of water at t_2 : h_2 (cm)			
h_1/h_2			
$\log_{10} (h_1/h_2)$			
$a \times L$			
$a \times L/A$			
$2.3/(t_2 - t_1)$			
$k_T = [\log_{10} (h_1/h_2)]\ (aL/A)\ [2.3/(t_2 - t_1)]$			

[a] $k_{25} = (\mu_T/\mu_{25}) \times k_T$; k_T = hydraulic conductivity at T°C; k_{25} = hydraulic conductivity at 25°C; and μ_T μ_{25} = viscosity of water at T and 25°C.

Table 5.2. Saturated hydraulic conductivity at different depths in a Japanese rice soil(2).[a]

Depth (cm)	Texture	$k_1 \times 10^{-3}$ (cm/s)	$k_2 \times 10^{-3}$ (cm/s)
10-20	CL	0.1	0.07
20-30	SL	0.1	0.09
30-40	SL	2	0.2
40-50	SL	3	0.3
50-60	SL	2	1

[a] k_1 = saturated under vacuum, k_2 = saturated by capillarity. CL = clay loam, SL = sandy loam.

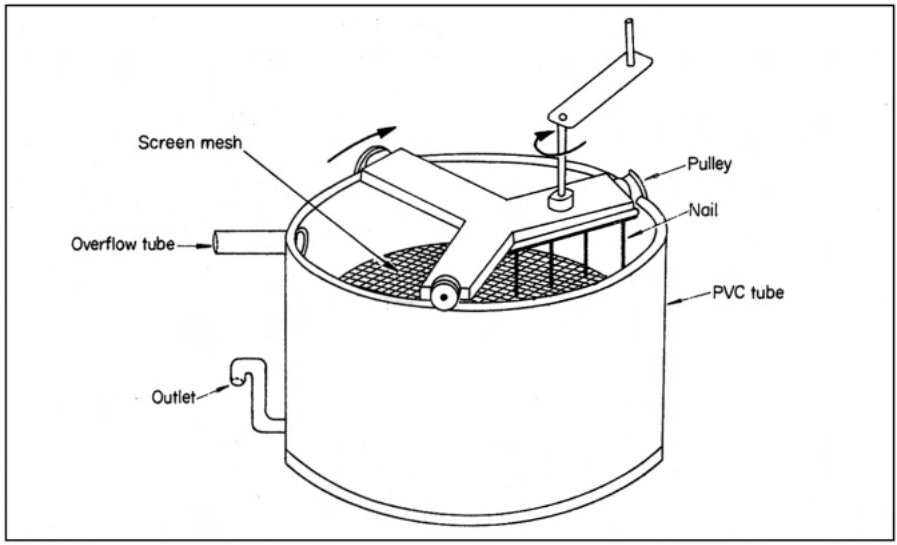

5.4. Equipment for puddling (puddler) soil in the laboratory.

stirrer (Fig. 5.4) that will disrupt soil clods, a graduated cylinder, a stopwatch, sand, and a millimeter scale.

For these determinations, take the soil from the puddled layer in the field. Its structure will be disturbed during sampling, but it will not affect the validity of the results because soil structure will be disturbed further by puddling in the laboratory.

Procedure

Use the constant head method to determine hydraulic conductivity. Put sand about 5 cm deep into the tube and cover it with the 2-mm screen. Sieve soils from the puddled layer using the 5-mm sieve, then put several centimeters of soil on top of the screen. Add water from below using the drain pipe (Fig. 5.5), and maintain the level 2-3 cm above the soil surface for 24 h. Measure and record the soil thickness and the difference of head between the water surface and the drain outlet.

Using the constant head method, measure the hydraulic conductivity of the sieved soil layer in this initial state.

After this initial measurement, use the puddler (stirrer) to disperse the soil and then allow the particles to settle. Again record the thickness of the soil and measure hydraulic conductivity. Repeat measurements, increasing the stirring time for each successive test.

Such experiments help determine relationships between hydraulic conductivity and the intensity of puddling.

Calculation

Calculate hydraulic conductivity using the equation

$$k = Q \cdot L / A \cdot t \cdot \Delta H$$

where Q is volume of water collected from the outlet in time t, L is the thickness of puddled soil (5 cm in Fig. 5.5), A is cross-sectional area of the PVC tube, and ΔH is the difference of head between the ponded water surface and the outlet.

Notes

These procedures give valid estimates of the effect of puddling on hydraulic conductivity, but they do not represent exactly the field situation. Additional field experiments are needed to measure water percolation rate and the effects of field-scale puddling on it.

In the laboratory studies, any kind of stirring equipment that adequately simulates puddling can be used.

HYDRAULIC CONDUCTIVITY FOR VERTICAL FLOW IN FLOODED CONDITIONS

Equipment

To determine hydraulic conductivity for vertical flow under submerged conditions, items needed are water requirement meter or rapid-response percolation meter and piezometers.

Principle

The hydraulic conductivity in a given layer is determined from the percolation rate, P (cm/d), and the difference of total hydraulic head, ΔH (cm), between two points at different depths in the layer.

$$k = P \cdot L / \Delta H = (D - E) \cdot L / \Delta H$$

where D is daily water requirement (cm/d), E is evaporation rate from water surface (cm/d), and L is vertical height between the two points. Here, the unit of hydraulic conductivity, k, is cm/d.

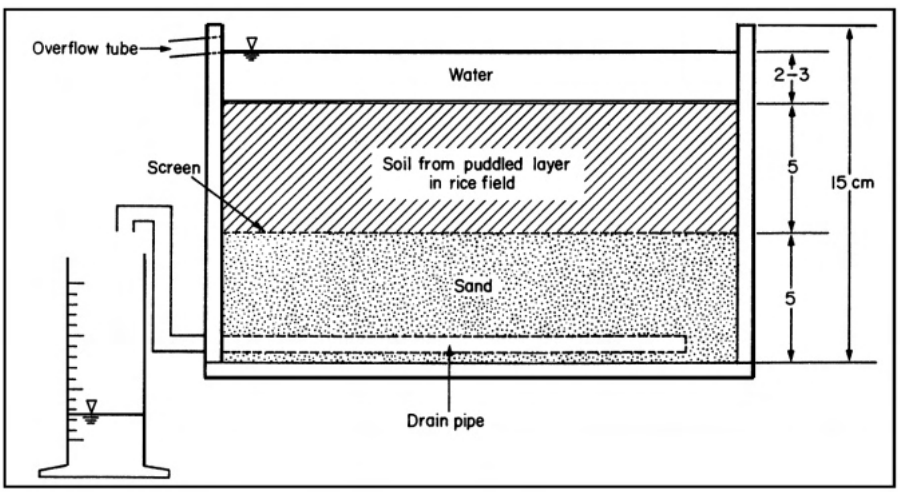

5.5. Constant head permeameter for puddled soil.

Procedure

For each soil layer, determine hydraulic conductivity by using piezometers to measure the soil water pressures at two different depths in the same layer and by measuring the rate of water percolation through the layer. The required measurement techniques are described in Chapters 4 and 7.

Notes

Always measure percolation at a place where there are no rice plants because water extraction by rice roots can cause a difference between percolation rates at the soil surface and at depth. As mentioned in Chapter 1, in some stratified conditions unsaturated flow may occur in the subsoil. In such unsaturated conditions, measure soil water suction with tensiometers.

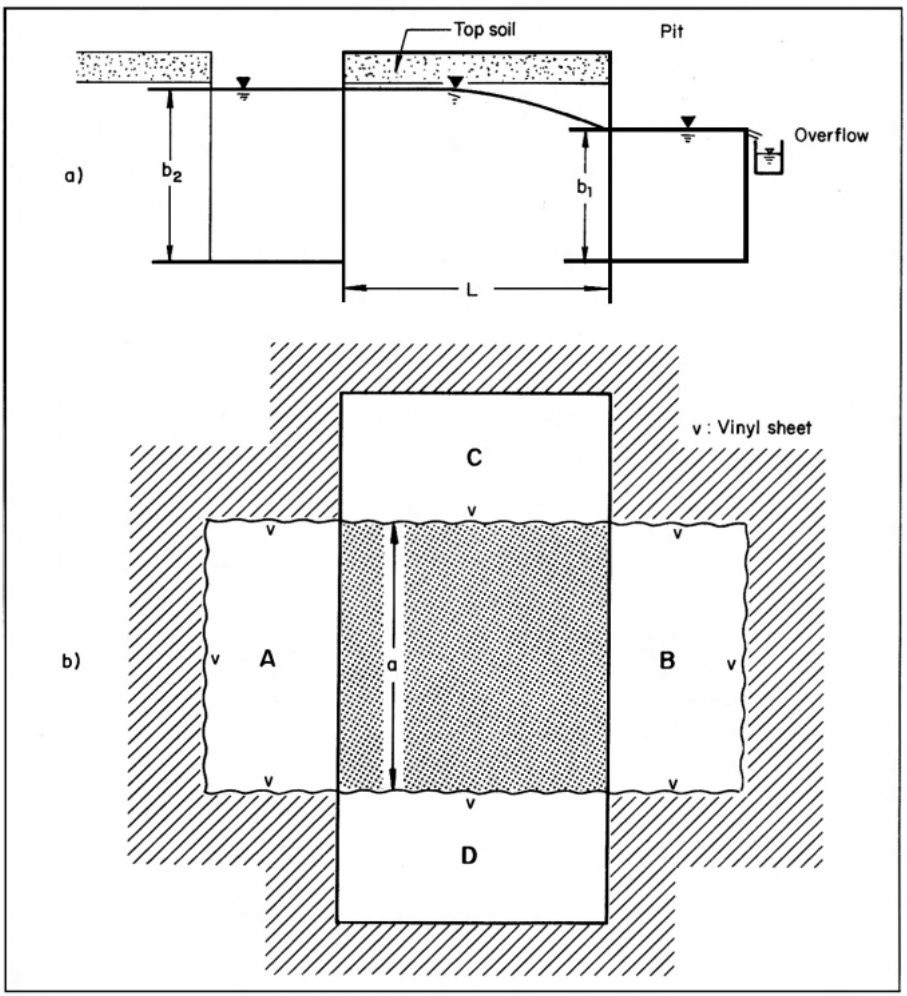

5.6. In situ measurement of hydraulic conductivity for horizontal flow (3). a) Elevation. b) Plan.

HYDRAULIC CONDUCTIVITY FOR HORIZONTAL FLOW

Equipment

To measure hydraulic conductivity for horizontal flow, the following items are needed: a spade, bucket, millimeter scale, graduated cylinder, vinyl sheet, and paste.

Principle

Horizontal hydraulic conductivity may be measured below the depth of soil cracking where the vertical water flow is negligible. Calculate the hydraulic conductivity using the equation

$$k = 2Q \cdot L / a \cdot (b_2^2 - b_1^2)$$

where Q is steady discharge (cm^3/s); a, b_1, b_2, and L are as shown in Figure 5.6.

Procedure

Dig out trenches around a square 100 × 100 cm and to a depth below the depth of cracking as shown in Figure 5.6. Fasten vinyl sheets (V) on all side walls except the test walls in A and B through which water will flow. Backfill trenches C and D. Pour water into A and maintain the water level just below the puddled layer. Water should flow through the test block into trench B. The overflow tube (Fig. 5.6a) maintains the water level in B lower than that in A. The volume of water flowing out from the tube is measured when stable conditions are established.

Notes

Avoid disturbing the test walls when digging. Reduce water leakage from the walls by plastering them with mud. The procedure assumes that Darcy's law is valid for water flow through macropore networks, but the law does not apply to individual macropores.

REFERENCES CITED

1. Nagata, N. 1971. On the nonunifonnity of air and water permeability of sandy soil [in Japanese]. Trans. Jpn. Soc. Inig. Drainage Reclam. Eng. 36:60-66.
2. Yamazaki, F., T. Yawata, T. Tabuchi, A. Tada, and K. Tabuchi. 1962. Physical properties of paddy soil layers and their relations to percolation [in Japanese]. Soil Phys. Conditions Plant Growth Jpn. 5:43-48.
3. Yamazaki, F., T. Yawata, H. Takenaka, and T. Tabuchi. 1963. On the effect of cracks in subsoil, upon draining of the heavy clay soil in Komukai, Hokkaido [in Japanese]. J. Jpn. Soc. Irrig. Drainage Reclam. Eng. 30:427-443.

CHAPTER 6

Macropores

EIICHI KOHNO, *NIHON UNIVERSITY*

Macropores such as cracks and root holes function as main permeable paths for water in a clayey flooded rice soil (2). Consequently, it is important to how the degree of development of these macropores in order to judge percolation, ease of drainage, and quantity of water required for puddling.

MEASUREMENT OF MACROPORES

Equipment

To delineate and measure macropores, the following items are needed: white vinyl water paint, 10-liter bucket, water, plaster of paris, scoop, garden trowel, spatula, folding measure, camera, and sketch book.

Method

Dig a hollow, 40 cm wide, 50 cm long, and 5 cm deep, at a suitable place in a surveyed soil. Pour into the hollow 8 liters of white vinyl paint that has been diluted 10 times with water.

One day later, make a pit 70 cm wide, 100 cm long, and 100 cm deep (Fig. 6.1). One of the long sides of the pit should coincide with the lengthwise center line of the hollow. With a garden trowel and spatula, clean the face of that wall of the pit that lies along this Line, so that the parts turned white by permeation of the paint are clearly visible.

Sketch these white macropores correctly in the sketch book. Also record their depth, concentrations and degrees of dryness of the paint, their shapes and sizes, and any other marked characteristics of the soil profile. Photographs of the macropores also can be useful.

The concentration of the paint is an index for judging the horizontal continuity of the macropore. A high concentration shows a low horizontal continuity of the macropore, and a low concentrate indicates the opposite. If the paint remains liquid in a certain zone, the vertical continuity of the macropore is high above the zone and low below the zone.

Notes

- Before conducting the experiment, determine the optimum dilution of paint that permeates rapidly but still shows good contrast between white macropores and darker soil matrix.
- If only the subsoil has macropores, remove the surface soil and pour the diluted paint directly into the subsoil.

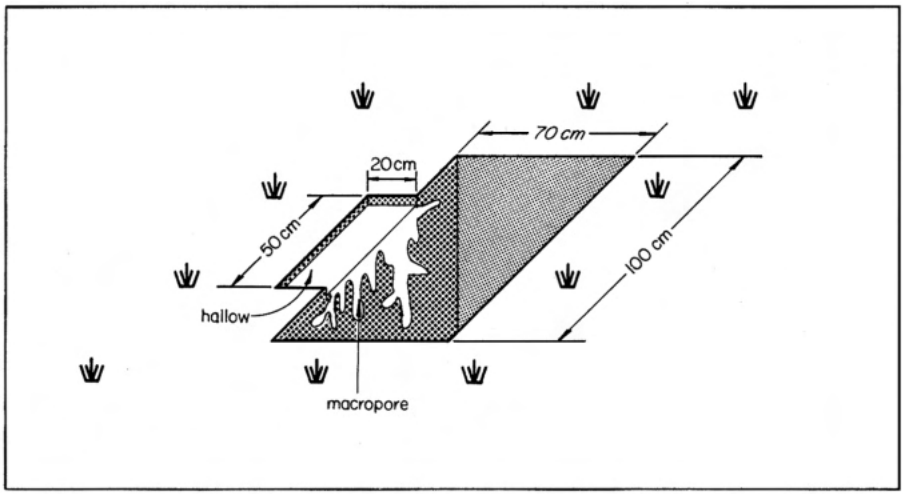

6.1. Pit for macropore observation.

- Determine the horizontal continuity of macropores by pouring a dilute solution of white paint into a hollow dug about 50 cm from the pit and observing how it exudes from the side wall into the pit.
- Pour plaster of paris into macropores to obtain, if needed, a rough measurement of pore volumes and shapes.

REFERENCES CITED

1. Yamazaki, F., H. Takenaka, T. Tabuchi, and A. Tada. 1964. On the effect of cracks in subsoil upon tile draining of clayey paddy field soil [in Japanese]. J. Agric. Eng. Soc. Jpn. 32(3):27-35.
2. Yamazaki, F., H. Takenaka, T. Tabuchi, R. Yasutomi, and A. Tada. 1966. The role of cracks in subsoil on underdrainage in clayey reclaimed paddy fields [in Japanese]. Trans. Agric. Eng. Soc. Jpn. 16:l-8.
3. Yamazaki, F., T. Yawata, H. Takenaka, and T. Tabuchi. 1963. On the effect of cracks in subsoil upon draining of the heavy clay soil in Komukai, Hokkaido [in Japanese]. J. Agric. Eng. Soc. Jpn. 30(8):1-8.

CHAPTER 7

Water requirement and percolation

KAZUHIDE ADACHI AND MUNEHIDE ISHIGURO, *NATIONAL RESEARCH INSTITUTE OF AGRICULTURAL ENGINEERING*

Measurements of water balance, including percolation and seepage and water requirement, for each plot in an irrigation scheme of flooded ricefields offer useful data for planning the irrigation schedule and for determining the water balance in the area (1).

The water balance in a bunded ricefield consists of rainfall, evaporation, transpiration, percolation and border seepage, and surface inflow and outflow (Fig. 7.1).

The water requirement as defined here is the decrease in depth of floodwater within a specific time in which there is no rainfall or surface inflow or outflow. It can be expressed for a definite time interval as follows:

water requirement = evaporation + transpiration + percolation + border seepage

Usually a day is the time unit, water requirement (mm/d) is the *dairy water requirement in millimeters.*

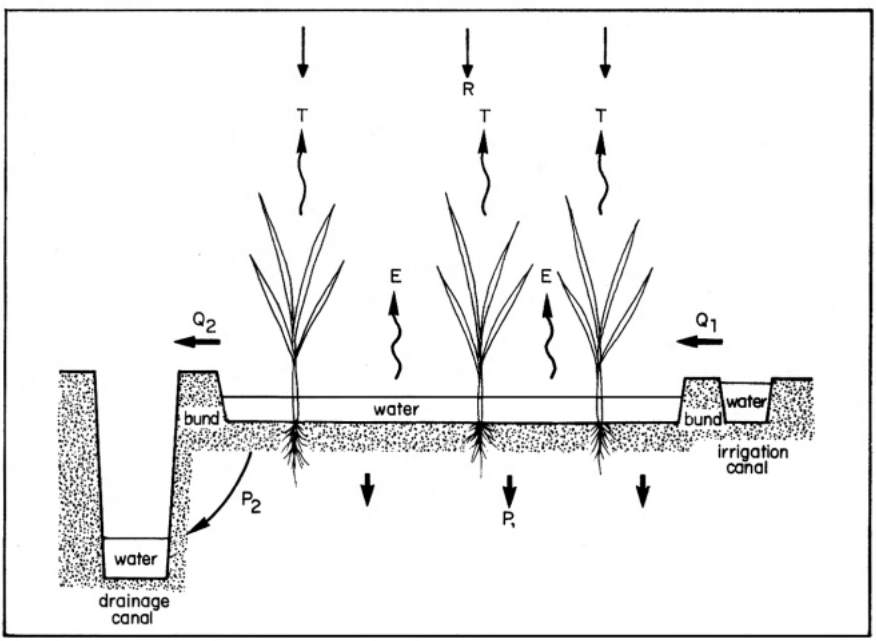

7.1. Water balance in a ricefield. R = rainfall, E = evaporation, T = transpiration, Q_1=surface inflow, Q_2 = surface outflow. P_1= percolation. P_2= seepage.

In Japan, the water requirement is about 5–10 mm/d in ill-drained fields, about 10-15 mm/d in imperfectly drained fields, about 15–30 mm/d in well-drained fields, and 30-100 mm/d in leaky fields. Water requirement, percolation, and evapotranspiration change seasonally in Japan (Fig. 7.2).

Various methods can measure water requirement. These include the water balance method, and methods that directly measure changes in field water level or that measure the quantity of water applied to satisfy the requirement.

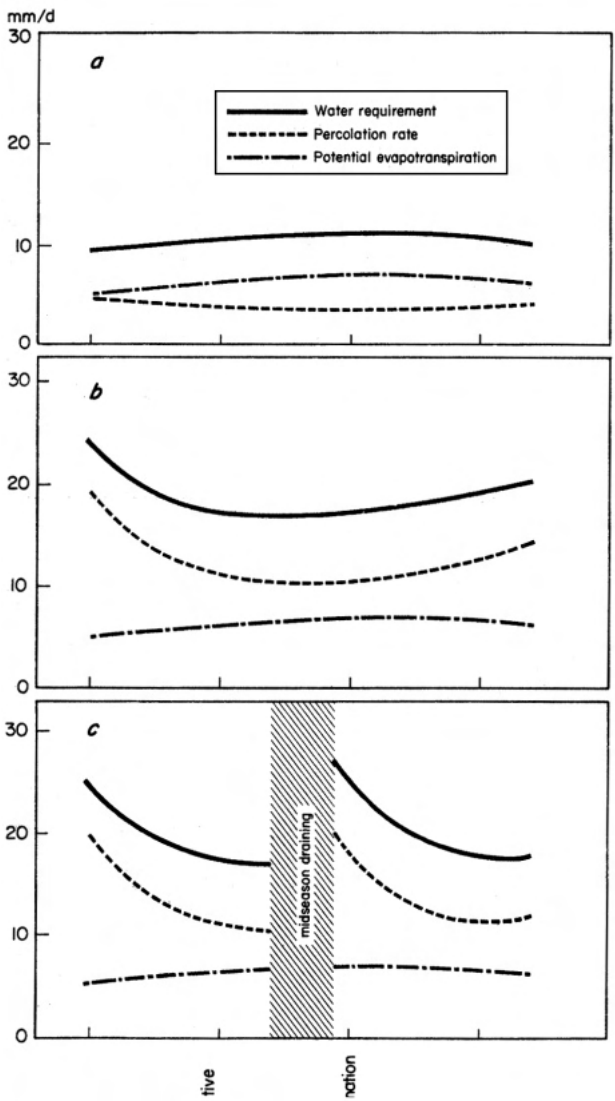

7.2. Seasonal change in water requirement, percolation rate, and potential evapotranspiration in a Japanese ricefield: a) ill-drained field, b) well-drained field, c) well-drained fields with mid-season draining (5, 6).

It is possible to measure percolation rate directly in the field with a rapid-response percolation meter or by subtracting evapotranspiration from the water requirement. Table 7.1 shows the measuring conditions applicable for each method.

Note that the water balance method measures the average value over an area of ricefields or of a single plot. The scale, hook gauge, or automatic float level recorder (Fig. 7.3) also give the average value for a plot.

The water requirement meter and the rapid-response percolation meter effectively measure point values. Because percolation rate usually depends on position in the field, take care when extrapolating such point values to give percolation estimates for a whole field.

The scale, hook gauge, or automatic float level recorder methods are valid only where there is no surface inflow or outflow; however, the float level recorder, by eliminating sudden changes of water level caused by short-term surface inflows or outflows, can give accurate values. Moreover, even when inlets and outlets are closed, surface inflow or outflow may occur through broken bunds or animal holes. It is also wise to avoid measurements on rainy days.

MEASUREMENTS BY SCALE, HOOK GAUGE, OR AUTOMATIC WATER-LEVEL RECORDER

Equipment

For the three methods for whole plot measurement, this equipment is needed: *Scale method:* stake, nail, depth scale with millimeter graduations; *Hook gauge method:* stake, hook gauge with a vernier scale of millimeter graduations; *Automatic float level recorder method:* an automatic float level recorder.

Principle

Water requirement is measured as the decrease per day in floodwater depth during a period without rainfall or surface inflow or outflow.

Table 7.1. Applicability of methods for measuring water requirement and percolation.

Method	Measured item	Measurement scale	Applicable with surface inflow and/or outflow
Water balance	Water requirement	A single plot or group of ricefields	Possible
Graduated scale		A plot	Impossible
Hook gauge			
Automatic water-level recorder			Possible in some circumstances (see text)
Water-requirement meter		A point	Possible
Rapid-response percolation meter	Percolation rate		

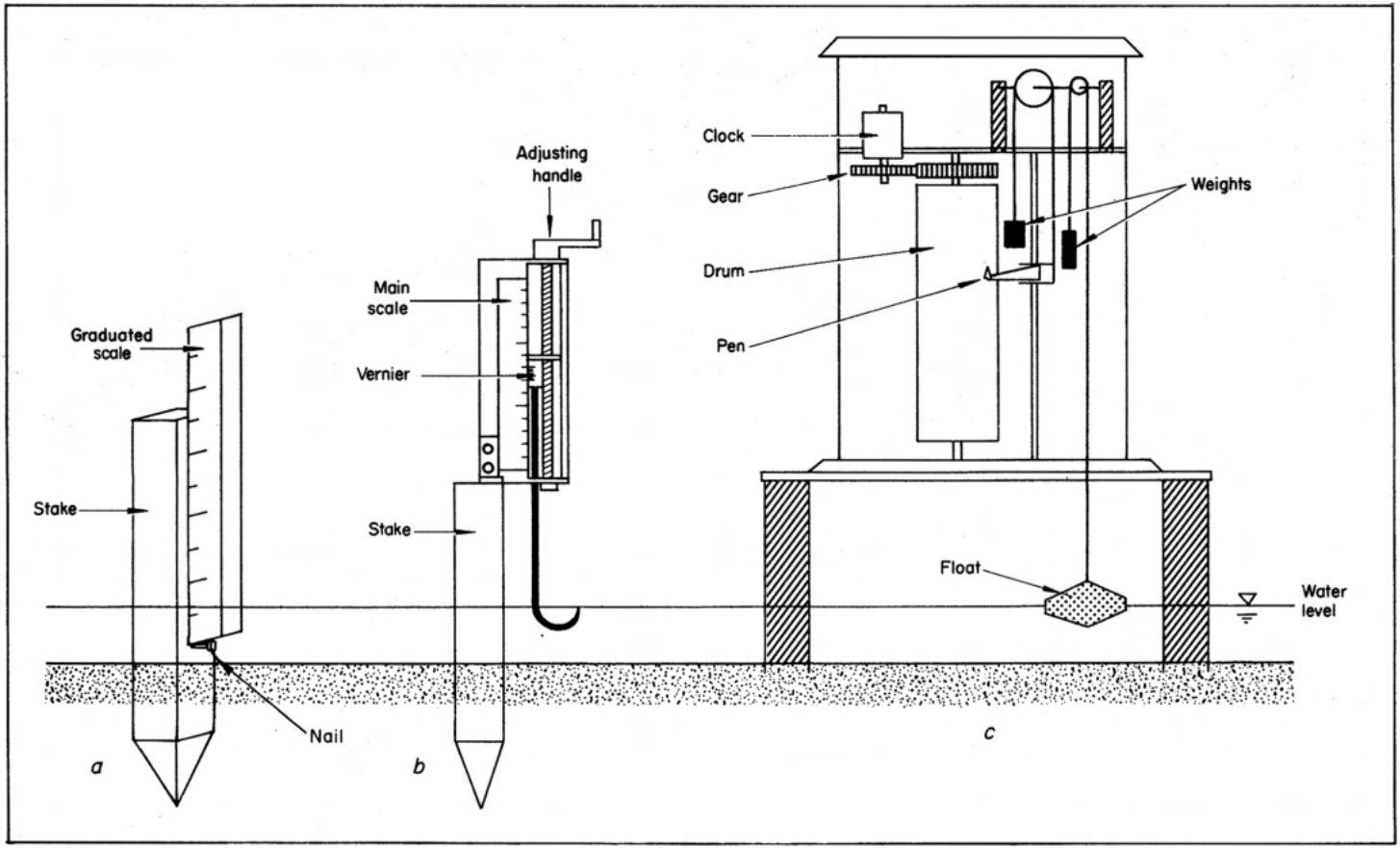

7.3. Equipment for water-level measurement using a) a scale, b) a hook gauge. and c) an automatic float level recorder.

Procedure

Set up the stake or water-level recorder (Fig. 7.3) about 0.5-1.0 m from the bund. Choose an average location, avoiding areas where the wind could blow the water. If the plot is large, set up two recorders a long distance apart. Stop the surface inflow and begin measuring only after the water level becomes constant.

For the scale method, read the water level by placing the scale with its lower end resting on the nail. For the hook gauge method, read the water level by setting the tip of the hook gauge on the surface of the water. For the automatic water-level recorder, set the gauge and record automatically.

In all methods, measure the water level again after 24 h.

Calculation

Calculate the depth of the water requirement as:

Daily water requirement (mm/d) = water level of first measurement (mm) - water level of second measurement (mm)

Table 7.2 shows an example of a record and calculation.

Notes

Because water balance components change hourly, daily totals and measurement are recommended for intersite comparisons (especially when using a scale or a hook gauge). Because values change seasonally, take at least three sets of stable data during each growth stage: puddling and transplanting, tillering, panicle formation, booting, and ripening (Fig. 7.2).

The accuracies of the measurements are about 1 mm by the scale method, and slightly less by the hook gauge or the automatic float level recorder methods.

With the automatic float level recorder, it is possible to collect time series of data that can indicate the occurrence of rainfall or surface inflow or outflow.

MEASUREMENT BY WATER REQUIREMENT METER

Equipment

The N-type water requirement meter (Fig. 7.4) consists of a rectangular box, about 15-20 cm high with a cross-sectional area that can enclose 2 hills of rice (3). The ground area per enclosed plant should be about the same for the box as for the whole plot. In Japan, the box usually has an area of 24 × 48 cm and a height of 20 cm, with about 5 cm inserted into the soil.

Table 7.2. Example of a data sheet for calculating water requirement by the scale method or the hook gauge method.

Date	Time	Water level (mm)		Daily water requirement (mm/d)		Notes
8 Jun 1983	0900 h	(1)	84	(1)–(2)	19	
9 Jun 1983	0900 h	(2)	65	(2)–(3)	23	
10 Jun 1983	0900 h	(3)	42			

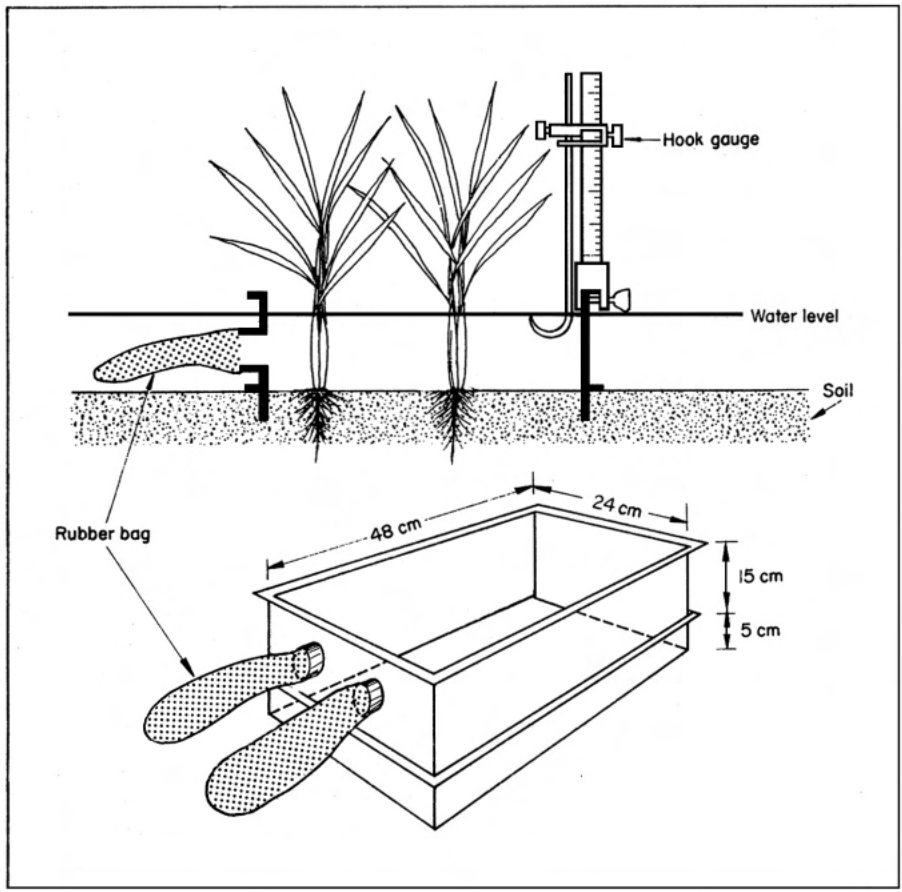

7.4. N-type water requirement meter.

Expandable rubber bags (manufactured as ice bags for medical applications) are attached to the side wall of the frame to eliminate the difference in water level between the inside and outside of the box. For high accuracy, use a hook gauge, otherwise a depth scale is adequate.

Principle

Water loss from the box is the sum of percolation and evapotranspiration. The water requirement is the water loss per day, and indicates the daily irrigation need during rainless periods.

Procedure

Take the measurements in fields flooded deep enough for the rubber bags to be submerged. Push the box 5 cm into the soil. If this disturbs the surface soil outside the frame, smooth the soil by hand to prevent leakage along the box wall. Do not touch the soil inside the frame. Attach the rubber bags to the side wall of the box and

adjust the volume of water inside the box so that each water bag is 50–80% full when the water levels inside and outside the frame are equal.

To measure the initial water level, pick up the tips of the rubber bags to drain them completely into the frame. Measure the water level, then return the bags to their position underwater. Use the same procedure to measure the water level 24 h later. As the water level inside the box lowers, supply additional water, and continue the same measuring procedure.

Because prolonged exposure to sunlight and water degrades the rubber bags, replace them at regular intervals. They are fragile and need to be handled carefully.

Calculation

Calculate the daily water requirement in the same manner as in the scale and hook gauge methods. Table 7.3 shows an example.

If measurement at 24-h intervals is impossible, measure at night as well as during the day because evapotranspiration differs between those times.

Notes

If the water level differs between the inside and the outside of the box, horizontal percolation will occur, causing measurement errors. Because draining the rubber bags into the frame results in different water levels inside and outside the frame, measure the inside level rapidly to prevent error.

Because values change hourly, a 24-h interval is best to achieve a standard measurement. But, if the water requirement is greater than about 50 mm/d, the limited adjusting capacity of the rubber bags may require a shorter measuring interval.

Because water requirement depends on position within the plot, record measurement at various positions to obtain mean values. The spatial variability usually becomes larger as the water requirement becomes larger. The application range of the water requirement meter is shown in Table 7.4.

If rubber bags are not available, use an open-ended single-ring cylindrical infiltrometer, but the water level will differ between the inside and the outside, inducing a measurement error. To reduce this error, measure rapidly. Also carefully push the cylinder deep into the soil to suppress the amount of water flowing into the cylinder from underneath, but do not allow the soil inside to crack.

Table 7.3. Example of a data sheet for water-requirement meter.

Date	Time	Water level (mm)				Decrease of water level (mm)		Time interval (h)	Daily water requirement (mm/d)
		Before water supply		After water supply					
7 Jul 1985	0900 h			(1)	162	(1)–(2)	19	24	19
8 Jul 1985	0900 h	(2)	143	(3)	162	(3)–(4)	11	24	11
9 Jul 1985	0900 h	(4)	151	(5)	166	(5)–(6)	13	24	13
10 Jul 1985	0900 h	(6)	153						

Table 7.4. Application range and constraints for N-type water-requirement meter (4).

Objective \ Water requirement value	More than 100 mm/d	About 50 mm/d	Less than 20 mm/d
Water requirement at a point	• The measuring period must be short (4-8 h) • Analyze carefully	• Twice-daily measurements are usually needed, although 24-h measurement is sometimes possible • Highly reliable	• 24-h measurement is possible • Highly reliable
Average water requirement for a plot	• Because of large site-to-site variability, the meter cannot be used effectively	• Measurements should be made at 6 or more replicated positions • Less reliable	• Measurements should be made at 3 or more replicated positions • Highly reliable

RAPID-RESPONSE PERCOLATION METER

Equipment

The rapid-response percolation meter (Fig. 7.5) includes a cylinder of cross-sectional area 144 cm^2, a transparent tube on a graduated wooden float, a support to moor the transparent tube and the wooden float, a wash bottle, and a stopwatch. Sometimes the cylinder may be noncircular, with an area different from 144 cm^2, although that size can set easily between hills and allow easy calculation of the percolation rate.

The cross-sectional area for the transparent tube is usually 0.1-0.3 cm^2, but the area may be changed to suit a particular percolation rate. The float ensures that the water level in the cylinder-tube system remains equal to that in the flooded field.

Principle

The amount of water that percolates through the cylinder is equaled by the amount that passes through the transparent tube on the float (10). Because the cross-sectional areas of cylinder and tube are so different, the rate of movement of the air-water interface in the transparent tube gives a much-magnified representation of

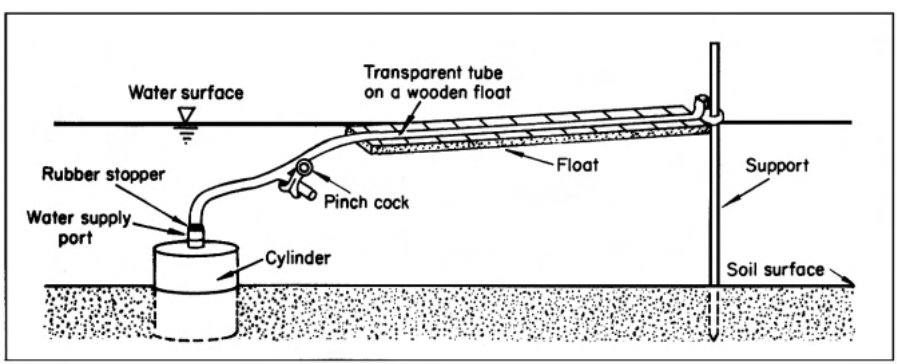

7.5. Rapid-response percolation meter (float type).

the water percolation rate into the soil. By using the rapid-response percolation meter, it is possible to obtain the percolation rate within a few minutes, and calculate the rate using the equation

$$P = 1440\ X \cdot a / A \cdot t$$

where P is the percolation rate (mm/d), a is the cross-sectional area of the transparent tube (cm^2), A is the cross-sectional area of the cylinder (cm^2), and X (mm) is the distance moved by the air-water interface in the transparent tube in time t (min). Usually the wooden float has graduations for percolation rate corresponding to those measured within 1-5 min.

Procedure

Carefully insert the cylinder vertically into the soil until it is stable, trying to reach the hardpan if there is one. If the floodwater is too shallow for the water supply port to be underwater, fill the cylinder by pouring water into the port with the wash bottle.

Hold the transparent tube attached to the wooden float underwater, leaving the pinch cock open until the tube is completely filled. Then allow it to float, but fasten it to the support to prevent it from swinging.

Insert the rubber stopper into the water supply port, keeping the tube afloat and preventing air bubbles from entering the tube or the cylinder.

After closing the pinch cock, measure the percolation rate by checking the graduated scale and recording the distance moved by the air-water interface during either a 1- or a 5-min period. Repeat the measurement until the values become constant. When the tube needs refilling, open the pinch cock to allow water to enter.

Calculation

Calculate the percolation rate from the equation given, or read it directly if the float has a calibrated graduation.

Notes

The rapid-response percolation meter can measure percolation at several points in a short time (7, 8). It is a powerful method to measure the spatial distribution of percolation rates and to discover regions in a ricefield where percolation is excessive. Figure 7.6 shows an example of the spatial distribution of percolation in a Japanese ricefield, and of regions with very high percolation (9).

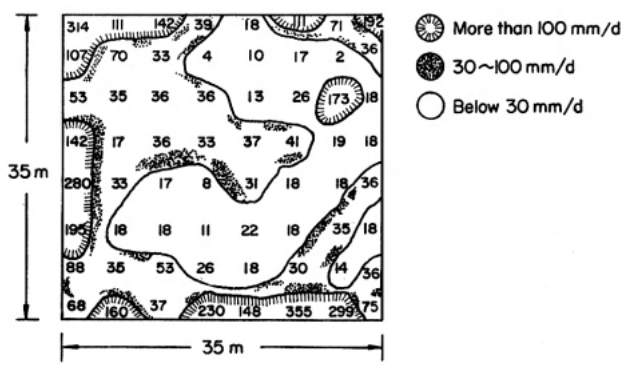

7.6. Spatial variation of percolation rate in a Japanese ricefield (8, 9).

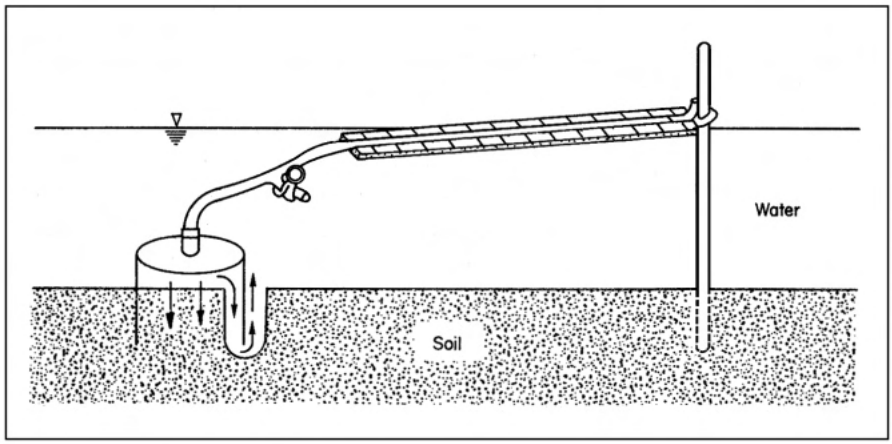

7.7. Source of error in percolation-meter readings when the cylinder does not make complete contact with the surrounding soil.

With this meter, it is difficult to measure exactly a percolation rate less than 20 mm/d because apparatus insertion and water uptake by roots affect precision.

To minimize measurement error, design the cylinder wall to be as thin as possible, about 0.3 mm, to avoid disturbing the soil and to maintain good contact between the cylinder wall and the soil (Fig. 7.7).

When conducting the experiment, stay more than 50 cm from the cylinder to prevent soil compression and change of water pressure which may influence the measurements.

If a transparent tube on a wooden float is unavailable, adapt a Mariotte bottle (Fig. 7.8).

WATER BALANCE METHOD

The water balance method is applicable for an area where surface inflow and outflow can be measured.

Equipment

Depending on field conditions, the water flows into and out of the plot or group of plots may be measured using either a triangular weir and a hook gauge, a container of known volume and a stopwatch, a current meter and a stopwatch, or a float and a stopwatch.

Principles

Water balance for a plot. Usually, it is possible to calculate water balance in a rice plot (Fig. 7.1) during a given period using the following equation:

$$R + (1000\ Q_1/A) = (1000\ Q_2/A) + P_1 + P_2 + ET + \Delta S$$

where R is rainfall (mm/d), Q_1 is surface inflow water (m^3/d), Q_2 is the surface

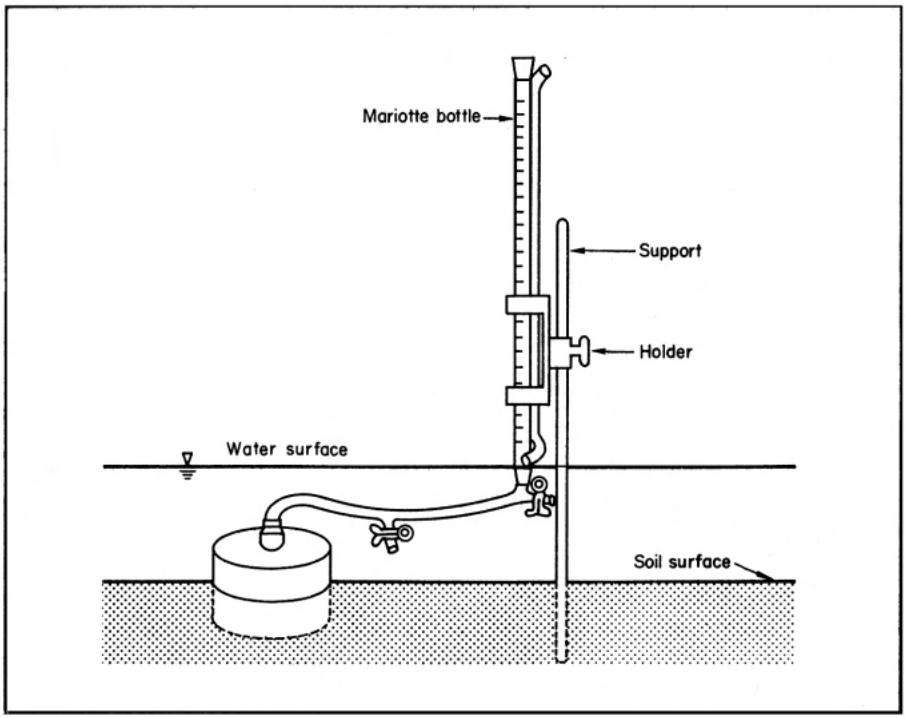

7.8. Rapid-response percolation meter using Mariotte bottle.

outflow water (m^3/d), P_1 is percolation (mm/d), P_2 is border seepage (mm/d), ET is evapotranspiration (mmid), AS is the change in water storage in and on the soil (mmid), and A is the plot area (m^2).

During a short period without rain, if a flooded field receives a constant water supply, ΔS is negligible. Consequently, the equation can be rewritten as

$$P_1 + P_2 + ET = 1000\,(Q_1 - Q_2)/A$$

If the water requirement is expressed as

$$D = P_1 + P_2 + ET$$

the equation can be further modified to

$$D = 1000\,(Q_1 - Q_2)/A.$$

Water balance for a group of ricefields. The water balance for a *group* of ricefields (Fig. 7.9) in a given period is given by

$$R + G_1 + (1000\,Q'_1/A') = (1000\,Q'_2/A') + G_2 + ET + \Delta S$$

where G_1 is subsurface inflow (mm/d) and G_2 is subsurface outflow (mm/d), Q'_1 (m^3/d) is surface inflow for the group of plots, Q'_2 (m^3/d) is surface outflow for the group of plots, and A' (m^2) is the area of the group of plots.

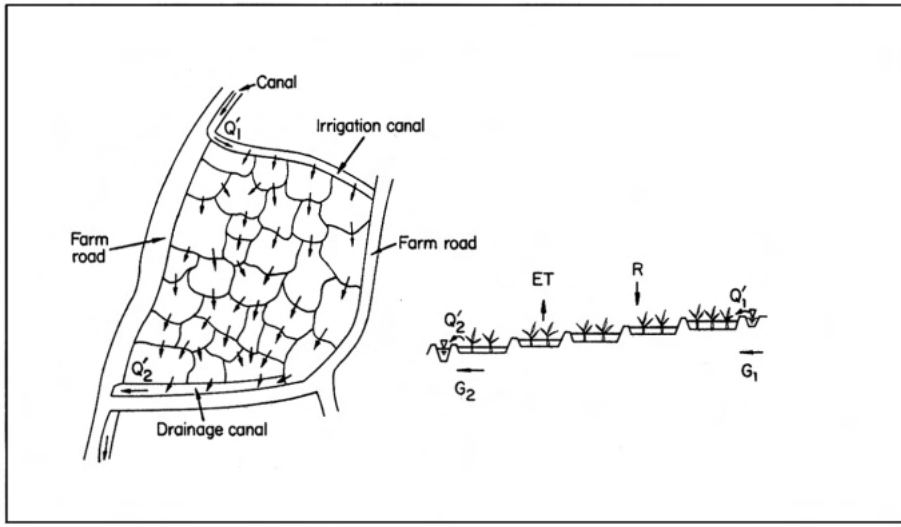

7.9. Water balance for a group of flooded ricefields.

Water consumption (D') for the group of plots is defined as

$$D' = 1000\,(Q'_1 - Q'_2)/A' = ET + (G_2 - G_1) + \Delta S - R$$

and hence, as previously:

$$D' = 1000\,(Q'_1 - Q'_2)/A' = ET + (G_2 - G_1).$$

Procedure

Measurements of inflow and outflow are described in Chapter 8. To determine the other components of the balance, select a group of ricefields from a map. Calculate the area and survey the borders to detect those water inlets and outlets that need to be measured.

Assemble sufficient people and equipment so that all measurements can be completed in a few hours. But first, check past rainfall records and choose a time when there is little likelihood of rain. However, before and during the measurement, there should be a constant flow of water into and through the flooded fields.

Calculation

Calculate the water requirement and the water consumption using the equations previously derived.

Notes

Reliable results depend greatly on the accuracy of flow rate measurements, and can be obtained only if surface inflow and outflow are not large in comparison to the water requirement or water consumption (2).

The water consumption, D', for the group of plots is usually smaller than the average (plot) water requirement, D, as is shown in Table 7.5 for a group of Japanese

Table 7.5. Water consumption in a group of Japanese ricefields (2).

Region	Terrain gradient	Area A´ (m^2)	Surface inflow		Surface outflow		Water consumption D (mm/d)	Water requirement D (mm/d)
			Q_1' (m^3/d)	Q_1'/A' (mm/d)	Q_3' (m^3/d)	Q_2'/A' (mm/d)		
Mu River Hokkaido	0.001	1.1×10^7	5.6×10^5	52	4.5×10^5	42	10	32
Hazama River Miyagi	0.0005	1.6×10^7	3.5×10^5	22	2.2×10^5	14	8	14
Naka River Saitama	0.0001-0.001	4.5×10^4	6.7×10^6	15	3.6×10^6	8	7	17
Ryoso Togane Chiba	0.001	1.0×10^6	1.4×10^4	14	5.0×10^3	5	9	10
Komino Saitama	0.001	3.0×10^6	2.1×10^4	7	9.0×10^3	3	4	13

ricefields. Often, water that has percolated from a plot can run into a drainage canal and irrigate other fields in the same area. Or in adjoining plots with an elevation difference, surface water may seep from the higher to the lower plot.

REFERENCES CITED

1. Furuki, T. 1968. Measurement of water requirement for rice fields. Pages 350-353, 359-367 *in* Planning and investigating land consolidation [in Japanese]. Upland Agricultural Development Association, Japan.
2. Kaneko, R. 1973. Agricultural hydrology [in Japanese]. Kyorito Publishing Co., Japan.
3. Kano, T., K. Shiina, S. Nakagawa, and T. Kosuge. 1961. The new method of measuring water requirement for rice fields [in Japanese]. Trans. Jpn. Soc. Irrig. Drainage Reclam. Eng. 28(8):418424.
4. Nakagawa, S. 1966. The method of planning for irrigation of rice fields (No. 4) [in Japanese]. J. Jpn. Soc. Irrig. Drainage Reclam. Eng. 34(9):519-520.
5. Nakagawa, S. 1967. The method of planning for irrigation of rice fields (No. 5) [in Japanese]. J. Jpn. Soc. Irrig. Drainage Reclam. Eng. 34(10):573.
6. Nakagawa, S. 1968. The method of planning for irrigation of rice fields (No. 6) [in Japanese]. J. Jpn. Soc. Irrig. Drainage Reclam. Eng. 34(11):626-630.
7. Takenaka, H. 1965. Some improvement of rapid measuring apparatus for percolation water in the paddy fields [in Japanese]. Records of land reclamation research, Laboratory of Land Reclamation, Faculty of Agriculture, University of Tokyo.
8. Yamazaki, F., T. lshikawa, K. Tokunaga, and K. Tukidate. 1961. On the improvement of rapid measuring for percolation water in paddy fields [in Japanese]. Records of land reclamation research, Laboratory of Land Reclamation, Faculty of Agriculture, University of Tokyo.
9. Yamazaki, F., T. Yawata, T. Tabuchi, and T. Ishikawa. 1961. Percolation through ridge and inside area of paddy fields [in Japanese]. J. Agric. Eng. Soc. Jpn. 29(7):13-18.
10. Yawata, T., T. Tabuchi, and M. Nakano. 1967. Experiments for soil physics [in Japanese]. University of Tokyo Press, Tokyo.

CHAPTER 8

Flow rate

YUKUO ABE, *UNIVERSITY OF TSUKUBA*

To apply the required volume of irrigation water to a ricefield, the water must flow at known measured rates during the appropriate measured time. Similarly, the volume of discharge to the drain may be determined if the drain volume flow rate is measured (1).

Flow rate measurements are usually made in the open channel that conducts irrigation or drainage. But in some cases, measurements are made in the inlet or outlet opening in the field bund.

To determine discharge accurately:

- the flow should have little turbulence,
- the cross section of the channel should be uniform for some distance,
- the flow must have adequate surface width and depth.

Flow rate measurements with either a current meter or a float are common because they are accurate and simple (3). Other methods that use a Parshall flume or various kinds of weir give reliable long-term records, but their structures are complex, and their installation involves much effort and expense.

MEASURING FLOW RATE WITH CURRENT METERS

Equipment

In addition to the current meter (Fig. 8.1), a stopwatch, a tape measure, and a millimeter scale for measuring water depth are needed.

Principle

The flow rate of water in an open channel is the product of the flow velocity and the cross-sectional area of the flow. The flow velocity is obtained by recording the rate of revolution of the current meter cup or vane (Fig. 8.1). The cross-sectional area is measured by surveying the channel shape and the flow velocity profile. Current meters used in Japanese rice research operate only in flows deeper than 15-20 cm and faster than 10-15 cm/s. They emit an audio-signal pulse each time the cup or vane completes a predetermined number of revolutions.

Measurement procedure and requirements

The flow must be constant in time and uniform from 3 m upstream to 0.5 m downstream of the meter. Place the meter in a stable position in the flow, using a supporting pipe or a rope (Fig. 8.1) to hold it at right angles to the cross section.

Count, for each measurement point, the number (p) of audio-signal pulses that occur in time t (seconds). Knowing that k flow-meter revolutions are needed to

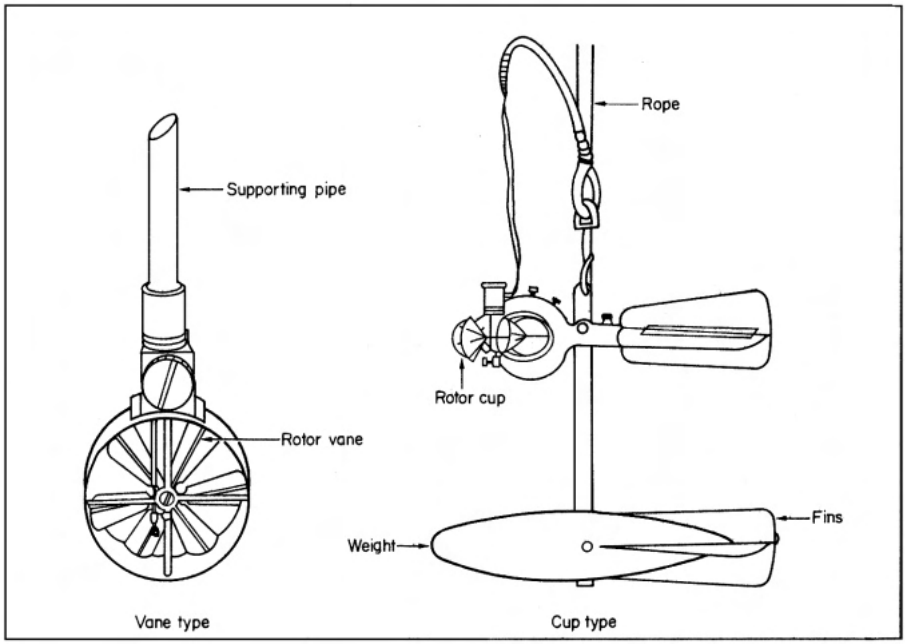

8.1. Current meters.

generate one audio-signal pulse, calculate the flow-meter revolution rate n = k•p/ t, and hence (from the flow-meter calibration) the flow velocity.

The measurement points must be selected to sample the variation in flow velocity, both across the channel and with depth. At a particular distance across the channel, the mean velocity of flow is determined by measuring the flow velocity at different depths. However, to speed operation in the field, two methods can be used to give approximate values for the mean velocity of flow. The one-point method equates the mean flow velocity to the velocity measured at a depth from the surface equal to 60% of the channel depth at that place (Fig. 8.2). The two-point method approximates the mean velocity as the average of the velocities at depths equal to 20 and 80% of channel depth. The two-point method is more accurate.

To allow for variation in flow velocity across the channel, imagine the cross section to be divided into several sections by vertical lines (Fig. 8.3). Then measure the width and depths along both sides of the individual divisions. This need only be done once, when first using the particular measuring site. Determine the cross section area of the channel by adding the areas of the individual trapezoids.

Calculation

The relationship between the number of revolutions and the flow velocity is

$$v = \alpha n + \beta$$

where v is flow velocity (m/s), n is the rate of revolution (rps), and α and β are constants for the meter.

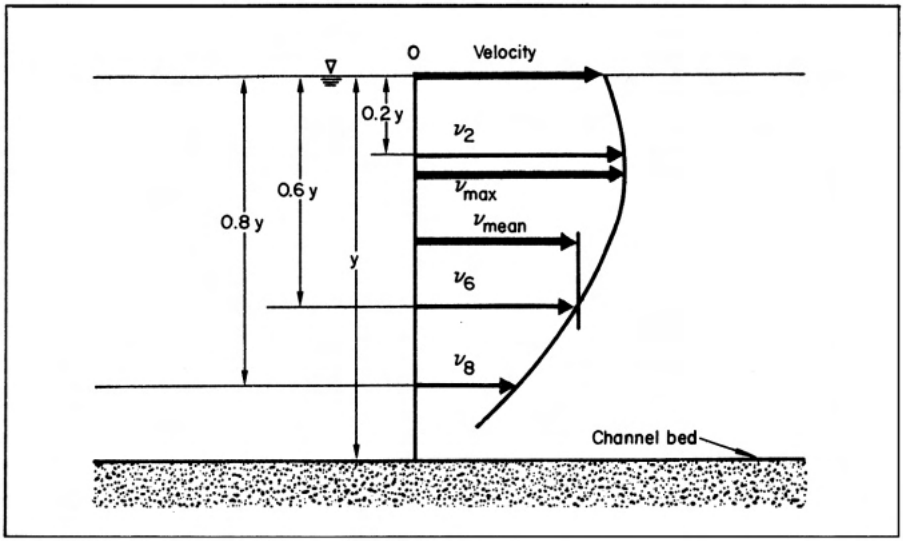

8.2. Typical vertical profile of water-flow velocity in an open channel, with method for calculating mean flow-velocity.

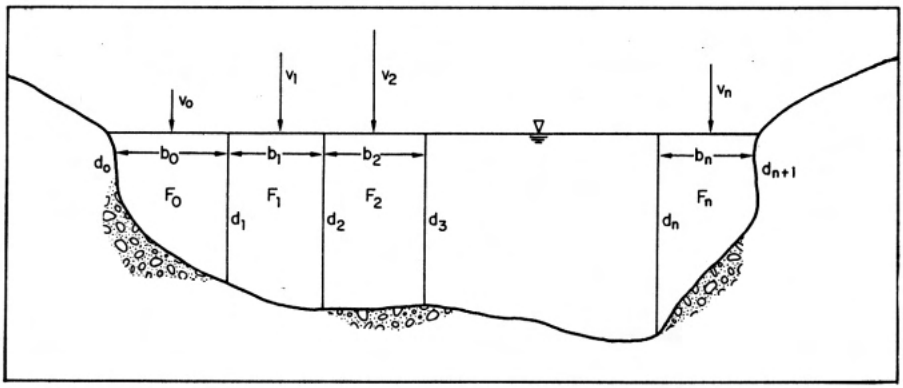

8.3. Sectors of flow cross section.

The total discharge is defined by the following equation, which sums the contributions to the flow from the different sectors (see Fig. 8.3):

$$Q = F_0v_0 + F_1v_1 + \ldots + F_nv_n$$

$$Q = b_0\frac{d_0 + d_1}{2}v_0 + b_1\frac{d_1 + d_2}{2}v_1 + \ldots b_n\frac{d_n + d_{n+1}}{2}v_n$$

where Q is the total discharge (m^3/s), d_0, d_1, ... d_{n+1} are successive depths (m) of flow, and b_0, b_1, ... b_n are widths (m) at the water surface of the individual sectors, F_0, F_1, ... F_n are areas (m^2) of individual sectors, v_0, v_1, ... v_n are mean flow velocities (m/s) in individual sectors.

Notes

Current meters need frequent recalibrating, but under optimal conditions are accurate and precise, with measurement error as low as 1.5%. A new type of Japanese current meter gives the velocity value directly without need to count the number of audio-signal pulses.

For all meters, roots and weeds that flow into the meter can lower the number of revolutions and underestimate flow rate.

MEASURING FLOW RATE BY FLOAT

Equipment

To measure flow rate by floats, equipment includes an appropriate float (Fig. 8.4), a stopwatch, a tape measure, and a millimeter scale for measuring water depth.

Principle

The velocity of a float in flowing water in an open channel is measured in terms of the time it takes the float to travel a specific distance. This measured velocity of the float is then converted (by an established correlation) to the mean velocity of the water flow. The product of the mean water flow velocity and the flow cross-sectional area gives the flow rate.

The results are approximate, but the measurement is easy and unbiased, even when the water is so shallow or the flow so slow that other methods are unusable.

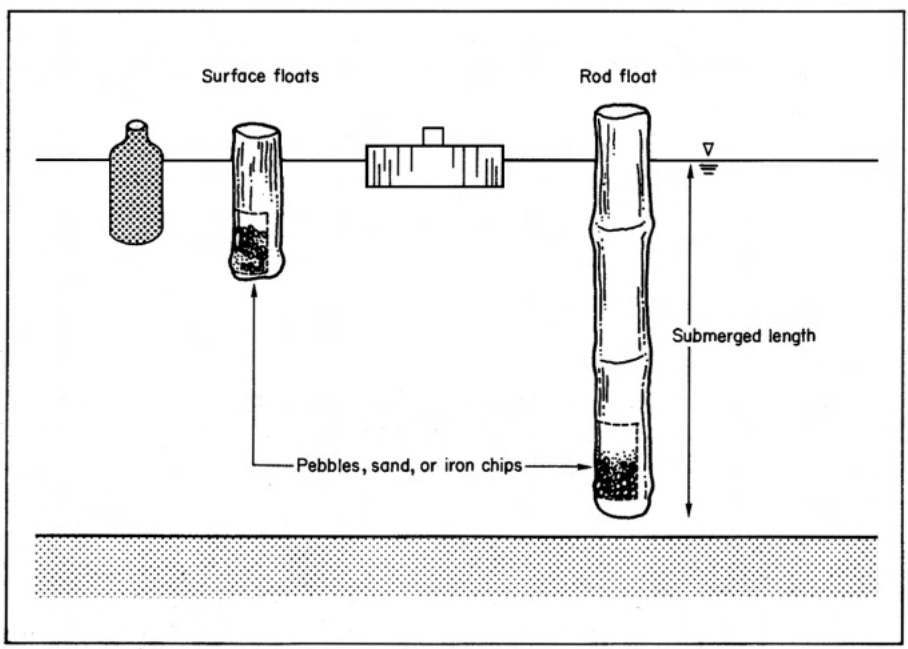

8.4. Types of float.

Table 8.1 Submerged length and correction coefficient for surface and rod floats (2).

	Surface float	Rod float		
Water depth (m)	< 0.7	0.7-1.3	1.3-2.6	2.6-5.2
Submerged length (m)	0.15, 0.25	0.5	1.0	2.0
Correction coefficient	0.85	0.88	0.91	0.94

Measurement methods and calculation

Determine two boundary lines at right angles to the flow and measure the distance between them. Put the float into the water a little upstream from the first boundary line. Measure the time it takes for the float to travel from the first boundary line to the second.

If the channel is narrow, put the float in the middle. If it is wide, put one float each at points one-third the distance from either side. Measure the cross-sectional area of the flow at two or more points along the stream, and use the mean area for calculating the flow rate, using the equation

$$Q = v \cdot A = L \cdot C \cdot A / t$$

where Q is the flow rate (m^3/s); v, the mean flow velocity (m/s); A, the channel cross-sectional area (m^2); L, the distance between the two boundary lines (m); t, the travel time of the float (s); and C, a correction coefficient (Table 8.1).

Because the surface velocity measured by a float is higher than the mean velocity of water flow, determine the mean velocity by multiplying the measured float velocity by a correction coefficient. Table 8.1 shows correction coefficients for surface and rod floats.

Notes

Wind can seriously influence float measurements, therefore, 80-90% of the surface float and as much of the rod float as possible should be in the water.

REFERENCES CITED

1. Japan International Cooperation Agency. 1978. Irrigation and drainage course; Hydraulic measurement. 40 p.
2. Kaneko, R., ed. 1968. Planning and investigating land consolidation [in Japanese]. Upland Agricultural Development Association, Tokyo, Japan.
3. Nakagawa, S.. M. Nakagawa, A. Matsumoto, T. Chiba, S. Iwamoto, K. Iwasaki, and Y. Matoba, eds. 1983. Advanced rice cultivation, irrigation and drainage technology in Japan. Fuji Marketing Research Co., Ltd., Tokyo, Japan.

CHAPTER 9

Bearing capacity

ATSUSHI TADA, *UNIVERSITY OF TSUKUBA*

The use of farm machines and their efficiency sometimes depends on the soil bearing capacity, the ability of a soil to bear the weight and traction of equipment (3). If the soil bearing capacity is low, farmers cannot use tractors and combine harvesters in their fields.

In many Japanese ricefields, the plowed layer and the plowsole layer determine the workability of farm machines (Table 9.1) (4). During puddling, the upper parts of the plowsole layer bear the tractors because the overlying 10-20 cm of plowed soil is very soft. But during harvest, the plowed layers can support the combine harvesters because the dried soil then has higher bearing capacity.

During plowing (in autumn or spring in Japan), whether the plowed layer or plowsole can support the tractor depends on the dryness of the soil.

If a field has no hardpan, the bearing capacity of the plow layer needs to be higher than in a field with a hardpan if it is to support the same farm machines.

To determine whether particular farm machines can be used in a field, measure the soil bearing capacity with a cone penetrometer. The cone index of penetration represents the resistance (kgf/cm^2 or MPa/10) to pushing a cone into the soil layer.

However, high bearing capacity and high soil hardness mean that it is also more difficult for roots to penetrate the soil (5). In Japan, if the hardness is higher than 24 mm as measured by Yamanaka's soil hardness meter, roots can penetrate the soil only slightly (1).

MEASUREMENT OF BEARING CAPACITY

Equipment

There are three easy methods for measuring bearing capacity, and their components are as follows (2).

- The cone penetrometer — the single-tube and dial gauge types include alternative cones, a proving ring, dial gauge, handle, and interchangeable rods (Fig. 9.1). The vertical angle of the cones is usually 30° or 60° and the base area of the cones 3.2 cm^2 or 6.45 cm^2.
- The SR-II soil resistance meter (Fig. 9.2) also includes penetrometer cones (vertical angles of 30° or 60° with a base area of 2.0 cm^2 or 6.0 cm^2), and provides, in addition, rectangular plates (7.0 × 5.0 and 10.0 × 5.0 cm) for measuring sinkage resistance, and a vane tester for shear resistance. The cones, plates, and vane each attach to a 50-cm rod.
- Yamanaka's soil hardness meter (penetrometer) in Figure 9.3 has as its main parts a cone, spring, and graduated pipe.

All three instruments also need a millimeter scale and a rag.

Table 9.1. Limiting values of soil-bearing strength for soil cultivation by different tractor types.

Type of ground strength / Measuring method	Machine operation	I. Ground of surface-layer support type			II. Ground of plowsole pan support type		
		plowing by wheeled tractor	plowing by semicrawler tractor	combine (semicrawler type)	plowing by wheeled tractor	plowing by semicrawler tractor	combine (semicrawler type)
Cone penetrometer Base area: 6.45 cm^2	Pattern of strength	Ground with maximum qc value in 1st layer (0-10 cm) and with qc average for lower layers (15-30 cm) not exceeding 0.25 MPa			Ground with plowsole pan having qc of 0.3 MPa or more and thickness of 10 cm or more existing between 12-30 cm		
	Limiting value	Mean qc for 5-25 cm			Mean qc for 0-10 cm		
		0.2 MPa or more	0.15 MPa or more	0.15 MPa or more	0.2 MPa or more	0.15 MPa or more	0.1 MPa or more
Vane shear tester	Pattern of strength	Ground lacking plowsole pan with shear strength τ of 0.025 MPa or more			Ground having plowsole pan with shear strength τ of 0.025 MPa or more		
Diameter of vane: 3.8 cm		Shear strength τ for 5-10 cm			Shear strength τ for 0-10 cm		
Length of vane: 7.6 cm	Limiting value	0.03 MPa or more	0.02 MPa or more	0.02 MPa or more	0.015 MPa or more	0.01 MPa or more	0.01 MPa or more

Note: 1 kgf/cm^2 = 0.098 MPa.

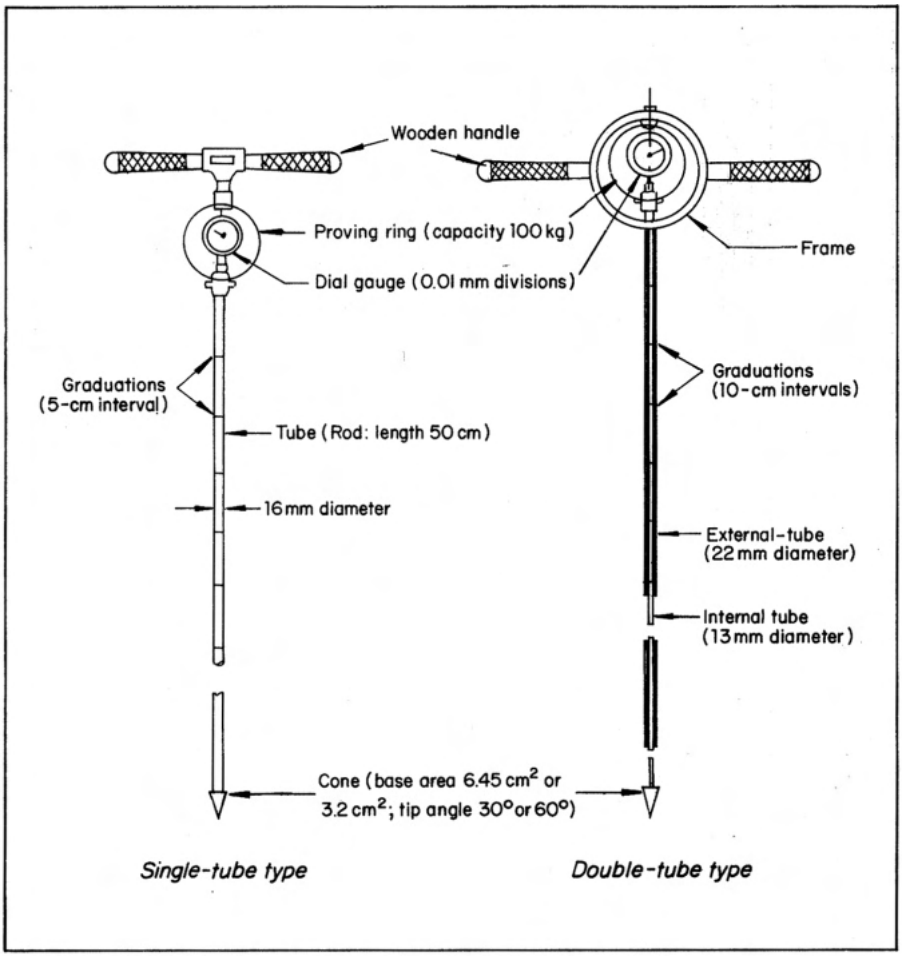

9.1. Cone penetrometers.

Principle

Bearing capacity can be evaluated in terms of the cone index of resistance to penetration of the various soil layers. With a cone penetrometer, a proving ring, and a dial gauge, measure the resistance to penetration. The penetrometer can measure cone index continuously from the surface to the full depth of the rod (about 50 cm) without having to dig a soil pit.

For the SR-II soil resistance meter, cone index is measured in terms of the compression of the spring (maximum force 25 or 50 kgf). Shearing strength of soil can be determined by measuring the torque applied to cause soil failure; an appropriate calibration equation is used to calculate shearing strength from torque. Vane shear tests are made at the soil surface and at successive depths after excavating surface soil. The recorded shearing strength relates to that soil layer into which the vanes actually penetrate.

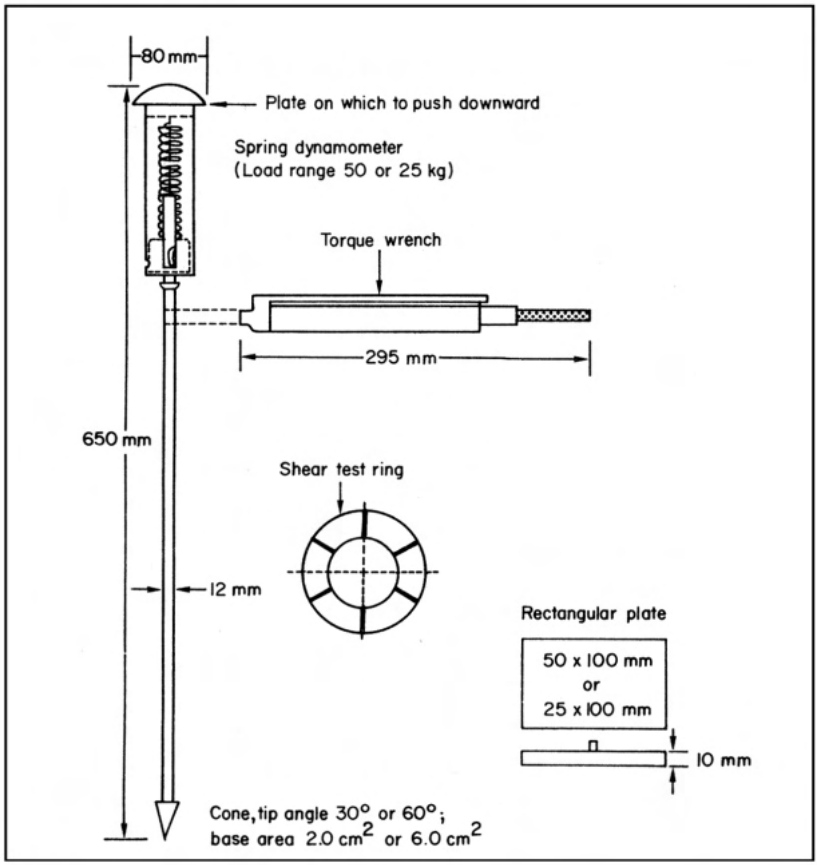

9.2. SR-II type instrument for measuring soil strength.

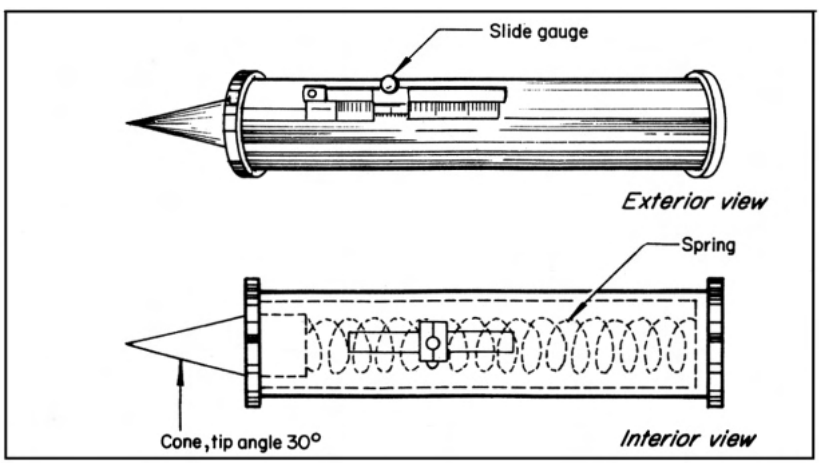

9.3. Yamanaka's soil hardness meter (penetrometer).

With Yamanaka's soil hardness meter, use the following equation to calculate the cone index q_c (kgf/cm^2 or MPa) from the length × (mm) of penetrated cone which is equal to the compression of the spring:

$$q_c = 100\,x/10.80\,(40 - x)^2 \quad (\text{kgf/cm}^2)$$
$$10\,x/0.81\,(40 - x)^2 \quad (\text{MPa})$$

This method is convenient to use at the time of soil survey. Using the pit dug for soil survey purposes, measure the cone index at various depths on one or more of the pit's vertical walls.

Procedures

To use the cone penetrometer, attach the cone, proving ring with dial gauge, and handle to the rod. Make supplementary depth markings on the rod with a marking pen or vinyl tape, because the engraved graduated lines are often covered by mud.

It is necessary to adjust the zero of the dial gauge and to calibrate the proving ring. To adjust the zero, stand the cone penetrometer vertically on hard ground, and set the dial-gauge reading to zero. To calibrate the proving ring and dial gauge, stand the cone penetrometer on a weighing platform, apply steadily increasing force, and record and graph the relationship between applied force and resultant dial-gauge reading.

To take a measurement of soil strength profile, hold the instrument vertically above the measuring point and push it slowly and evenly into the soil, using a penetration speed of about 1 cm/ s. Read and record the soil strength value at each depth using the base of the cone as the reference point for the measurement of depth penetrated.

Three people are needed to measure with this equipment. One reads the depth; another, the dial gauge; the third records the results, the base area of the cone and its tip angle, and appropriate information about the test site. With recording penetrometers, only one person is needed to take and record the observations.

Measurements should be made at least three times for each point, until successive results agree closely, and the average of the three then used. The rod and cone should be wiped clean after each penetration.

Use the same procedure for the SR-II soil hardness meter as for the cone penetrometer.

For Yamanaka's soil hardness meter (penetrometer), push the cone horizontally and slowly into the vertical side of a pit dug for soil surveying. The compression of the spring, read from the scale, shows resistance caused by soil hardness.

Measurement should be repeated 5-10 times for each depth, and their averages used to represent soil hardness. Soil particles adhering to the instrument should be wiped off.

Analysis and recording

For the cone penetrometer and the SR-II type instrument, convert the dial-gauge reading r (mm) for each depth into a corresponding resistance value (kgf) using the

Table 9.2. Cone-penetrometer readings.

Replication no.		Dial-gauge reading, r (mm)											Equivalent cone index (MPa)		
		1	2	3	4	5	6	7	8	9	Total	Av	$\bar{q}c$	Min	Max
Penetrated depth (cm)	0	1.20	0.75	0.80	1.00	1.20	0.65	0.65	0.40	0.61	7.26	0.80	0.28	0.14	0.42
	5											1.07	0.37		
	10											1.32	0.46		
	15											1.69	0.58		
	20											1.70	0.59		
	25											1.36	0.47		
	30											1.14	0.40		
	35											0.96	0.33		
	40											0.72	0.25		
	45											0.65	0.23		

cone (6.4 cm²; 30°)

cone (6.4 cm²; 30°)

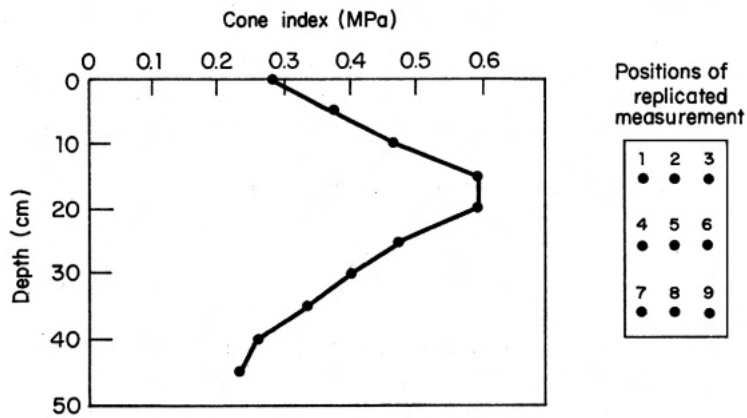

calibration curve established between the dial-gauge reading and the applied force F (kgf). Then calculate the cone index q_c (kgf/cm^2) using the following equation, which allows for the weight, W (kgf), of the penetrometer:

$$q_c = (F + W)/A = (Kr + W)/A$$

where A (cm^2) is the cone base area, and K is the response coefficient of the dial gauge.

It is possible to present the relationship between the cone index and depth penetrated in tabular and graphical form (Table 9.2).

Notes

Bearing capacity is affected by soil-water content and by soil management. Therefore, it differs between dry and wet seasons and in response to irrigation, drainage (including mid-season drainage), and land preparation, and may differ between neighboring plots. Soil water and management also affect the cone index of

resistance to penetration, and the seasonal changes in cone index may be different at different depths.

Measurements of cone index of penetration depend on cone base area — the larger the area, the lower the index, on penetration speed — the higher the speed, the larger the index, and friction between the soil and the rod — the greater the friction, the larger the index. To eliminate friction, use a double-tube penetrometer (Fig. 9.1). The tip angle of the cone, and soil moisture, texture, and structure also affect cone index.

Although rod length is usually 50 cm, it is possible to link two rods together to measure cone index to 100 cm depth. Usually, bearing capacity is evaluated by cone-index value from 0 to 15 cm in the plowed layer and from 15 to 25 cm in the plowsole.

REFERENCES CITED

1. Editorial Committee. 1983. Experimental guide for physical and engineering properties of soil [in Japanese]. Trans. Jpn. Soc. Irrig. Drainage Reclam. Eng. 102:135-142.
2. Committee on Measuring Methods for Physical Properties of Soil. 1976. Measuring methods for physical properties of soil [in Japanese]. Yokendo, Japan.
3. Kaneko, R., ed. 1968. Planning and investigating land consolidation [in Japanese]. Upland Agricultural Development Association, Tokyo, Japan.
4. Ministry of Agriculture, Forestry, and Fisheries. 1976. Study of land consolidation for large scale farming mechanization in paddy fields [in Japanese]. Japan.
5. Nakayama, H. 1983. Methods of measuring soil-bearing capacity. Pages 384-397 *in* Advanced rice cultivation, irrigation, and drainage technology in Japan. Fuji Marketing Research Co., Ltd., Tokyo, Japan.

CHAPTER 10

Surface relief of a ricefield

JUTARO KARUBE, *IBARAKI UNIVERSITY*

The surface relief of a ricefield greatly influences both plant growth and farm work (1). Surface relief results in irregular water depth which causes uneven rice growth, more weeds. and difficulty with mechanized seeding and transplanting.

If the soil is clayey with low permeability, surface relief will determine whether the soil is able to drain and dry enough for mechanized harvesting. For very uneven ricefields on low-permeability. soil, water may remain in concave parts for several days after surface drains are opened (2). The resulting low bearing capacity restricts the use of farm machinery.

Surface-relief measurements can determine whether flood-water depth will be uniform and whether surface water will drain rapidly during midseason and harvest draining.

MEASURING SURFACE RELIEF

Equipment

To measure surface relief by theodolite (surveyor's level), the following are needed: theodolite, tape measure, poles, surveyor's staff, and plotting paper.

It is possible also to assess surface relief by measuring the variation in floodwater depth or by observing and sketching surface conditions after floodwater drains. Equipment for both these methods includes tape measure, poles, and plotting paper. The first method needs, additionally, a surveyor's staff; the second method, a sketching board.

Principles

Measure the surface relief by determining surface elevation or floodwater depth at the intersection points on a 5- or 10-m square grid established over the field.

Alternatively, and particularly for a clay soil, it is possible to ascertain relief by mapping the conditions of soil-surface wetness at successive intervals of several days after opening surface drains and discontinuing flooding. When mapping surface wetness, the soil surface appearance in each part of the field is classified in terms of four standard wetness conditions.

Procedure

For all methods, establish a square grid by placing vertical poles in the bund at intervals of 5 or 10 m around the field.

When determining surface relief by theodolite (surveyor's level), firmly fix the theodolite on dry ground near the field being measured. Then stand the surveyor's

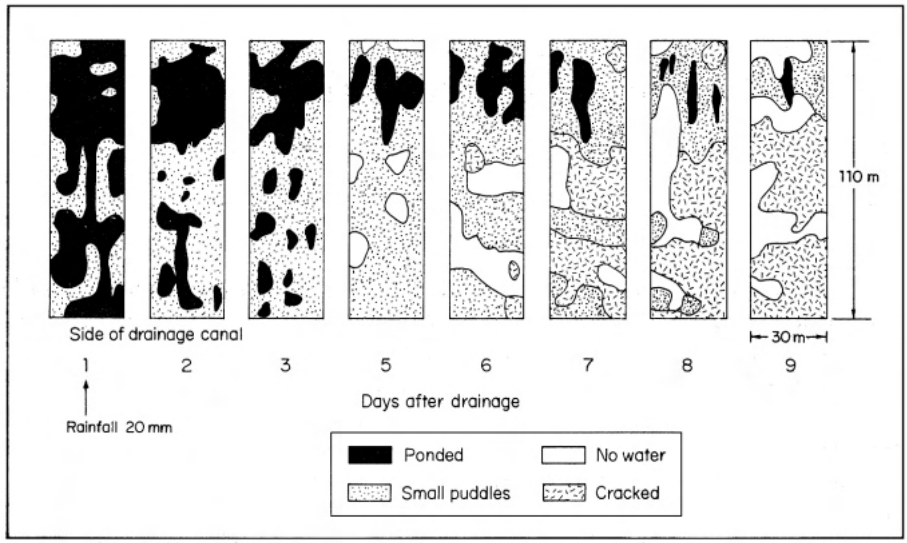

10.1. A series of sketches showing changes in surface conditions of a ricefield after midseason draining (2).

staff at each grid intersection point, and use the theodolite to measure the staff's elevation. If a grid point is not representative of the surface elevation of the nearby soil, move the staff to a neighboring point.

When evaluating surface relief by measuring the variation in floodwater depth, submerge all soil with floodwater, and maintain a constant water level. Then use a millimeter scale to measure the depth of water at each grid intersection point.

In assessing surface relief by observing and sketching draining and drying patterns, first submerge the whole field with floodwater, then open the surface drains. On each successive day, walk within the ricefield along transects 5 m apart, and observe and sketch the condition of the soil surface, classifying the conditions as *ponded, small puddles, no water,* and *cracked* (Fig. 10.1). Also record rainfall and other weather conditions during the observation period.

Analysis and presentation

For the two methods that measure surface elevation, map the elevations on graph paper, and draw contour lines at 2-cm intervals to show the surface relief of the field (Fig. 10.2). If there are irregular spots that do not easily fit the contours, sketch and note those distinctive features. Present these observations of surface draining and drying in a time sequence of sketch maps (Fig. 10.1).

REFERENCES CITED

1. Kaneko, R., ed. 1968. Planning and investigating land consolidation [in Japanese]. Upland Agricultural Development Association, Tokyo, Japan.
2. Tabuchi, T., M. Nakano, S. Suzuki, A. Sumita, and I. Maruta. 1966. Studies on drainage in clayey paddy fields [in Japanese, with English abstract]. Trans. Agric. Eng. Soc. Jpn. 18:7-47.

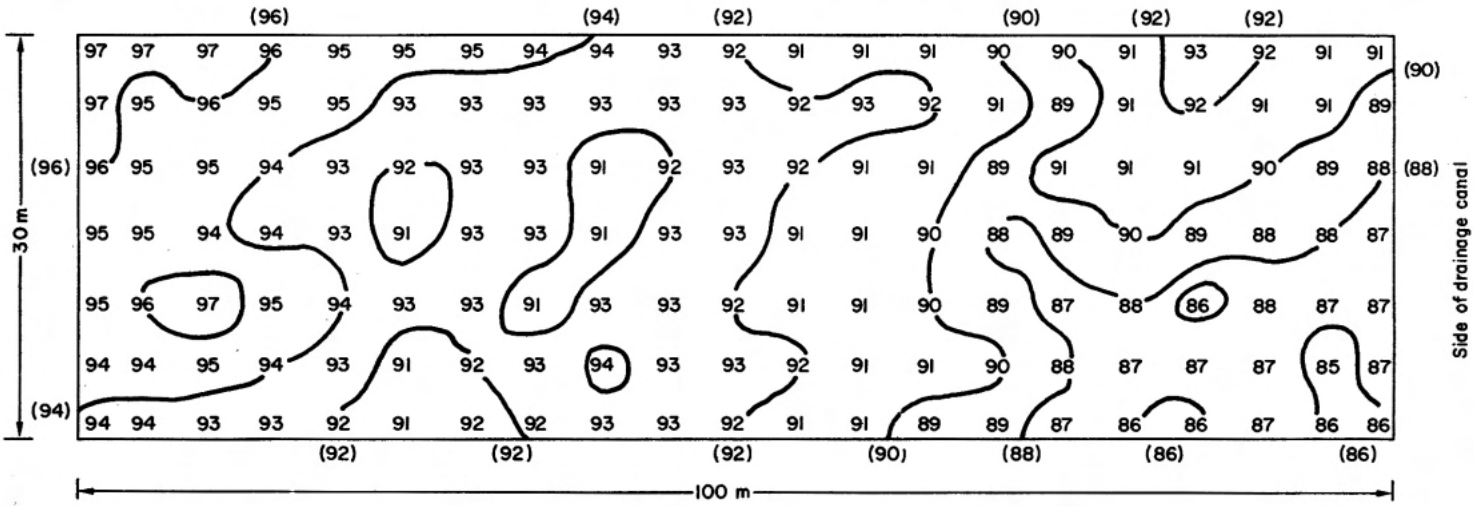

10.2. Elevation (cm) and contour lines showing the surface relief of a lowland ricefield.