PN-ABD-703
63505

Technology Evaluation Series No. 10

Evaluation of Technology for Integrated Control of Potato Tuber Moth in Field and Storage

K.V. Raman and R.H. Booth

INTERNATIONAL POTATO CENTER (CIP)

1983

Technology Evaluation Series No. 10

EVALUATION OF TECHNOLOGY FOR INTEGRATED CONTROL OF POTATO TUBER MOTH IN FIELD AND STORAGE

K. V. Raman and R. H. Booth

International Potato Center (CIP)

1983

TECHNOLOGY EVALUATION SERIES

The purpose of the Technology Evaluation Series is to acquaint scientists in national potato programs with technologies that have been generated at the International Potato Center (CIP) and that are ready for evaluation under local conditions.

Each technology is presented with relevant research results and with sufficient information on materials and procedures to use in evaluation. Several experiments including field layouts are suggested. Guidelines and forms for data collection are included.

By evaluating the technologies presented in this series, national scientists can obtain information on the suitability of using these technologies in their own countries. The feedback of this information will also help CIP to better orientate its research, which will ther result in technologies that are more appropriate to the conditions and needs of farmers in developing countries.

Primo Accatino
Coordinator, Research Transfer

EVALUATION OF TECHNOLOGY FOR INTEGRATED CONTROL OF POTATO TUBER MOTH IN FIELD AND STORAGE

K. V. Raman and R. H. Booth

INTRODUCTION

The potato tuber moth (PTM), Phthorimaea operculella (Zeller), is one of the most damaging pests of potatoes. In many countries, experience has shown that it is unrealistic to rely solely on the use of chemical insecticides to control this pest. This is due to the problems that are developing from increased PTM resistance to insecticides and from toxic chemicals that are applied to food products such as stored consumer potatoes.

Research on alternative control methods has indicated that where PTM populations are high, no control method used alone provides adequate protection. This has resulted in attempts to develop an integrated control program for use in field and storage. This paper explains the different control components identified for the development of an integrated control program for PTM in field and storage. The forms in the Appendixes can be used for recording data.

INTEGRATED CONTROL IN FIELD

Chemical control is often successful initially but is not a long-term solution, since PTM resistance to locally used insecticides may develop rapidly. Ignorance of simple cultural practices often leads to severe PTM damage. Promising control components that can be evaluated under local conditions are described below.

Resistance

Although immunity to PTM has not been identified, various levels of genetic resistance have been reported. Increased levels of resistance will

assist integrated field-control programs by reducing dependence on insecticides. Thus, germplasm should be screened using local field populations of PTM. Field experimentation provides additional data on tuber resistance that can be identified through storage tests. Selected clones should be screened in fields that allow good potato growth and have a known history of PTM infestation and damage.

The plot design that is used will depend on the number of tubers available per clone. When 80 or more tubers are available, a replicated randomized block design is used. Plant in plots with 4 rows each. The rows should be 6 m long with 20 tubers per row, or 80 tubers per plot. Tubers should be planted 30 cm apart with a space of 70 cm between rows. Each plot should be separated by a space of 1.5 m, so a worker can enter the field to make detailed evaluations throughout the growing season. Always include a local susceptible variety as a standard check.

An unreplicated design is used when a limited number of tubers are available. A minimum of 10 tubers per clone should be tested. Every fifth row should be planted with a local, susceptible variety--in Peru, the cultivars Desirée and DTO 33 are used. Follow the same spacing for planting tubers as for replicated trials, but leave a 1-m space between rows for access during field evaluations.

When the plants are growing, do not apply insecticides for PTM control. Nematodes and foliar and soil-borne diseases can be controlled by applying appropriate pesticides. Other insect pests such as the green peach aphid (Myzus persicae) and mites (Polyphagotarsonemus latus) can be controlled by using recommended rates of the insecticide Pirimicarb for aphid control and the acaricide Morestan for mite control. These chemicals do not affect PTM population build-up.

Field observations should begin when the first symptoms of foliar mining damage appear. Begin by counting the total number of: 1) infested growing points in 5 stems per replicate, and 2) mines in the foliage of 5 plants per replicate. Do these observations every 2-3 weeks and examine each plant for the presence of PTM larvae. At harvest, select 25 tubers (weight 40-60 g each) at random from each replicate and evaluate the PTM larvae damage by using the scoring system described in Appendix D. Use Appendix A

for field data collection. When possible, make evaluations on parasites, predators, and other pests and note them in the same Appendix.

Since the development of genetic resistance is a long process, other control components that can provide immediate solutions should be considered. These are described in the following sections.

Sex Pheromones

Commercially available PTM sex pheromone consists of trans-4, cis-7-tridicadien-1-ol acetate (PTM 1) and trans-4, cis-7-cis-10-tridecatrien-1-ol acetate (PTM 2) (0.4 mg of PTM 1 + 0.6 mg of PTM 2). These pheromones are impregnated on rubber caps that can be obtained in small quantities from CIP-Lima. The caps should be stored at -5°C in a refrigerator until needed. For larger quantities of these caps, contact the Laboratory for Research on Insecticides, Marijkeweg 22, 6700 PG, Wageningen, the Netherlands.

These sex pheromones are used mainly to:

- aid in monitoring and detecting the first occurrence of PTM
- facilitate proper use of insecticides when and where necessary
- aid in direct control of PTM

To use sex pheromones effectively, suitable traps are required. There are several trap designs, e.g., funnel, water, and sticky traps, that are available for evaluation under field conditions.

Funnel trap. This trap (Fig. 1) is made from light-weight, galvanized sheet metal, cut 27 cm in diameter and bent to form a 135° cone. Two, 2 x 6 cm clips, each with a hole, are riveted to the underside of the cone. These clips are attached to matching holes on opposite sides of a 19-cm diameter plastic funnel. A rubber cap, impregnated with pheromone, is suspended on a string from a 1.5-cm ring beneath the cone apex, which will position the cap centrally about 1 cm above the funnel mouth. Suspend a polyethylene bag (34 x 48 cm), containing 10 to 12 g of Carbaryl dust (20%), around the funnel rim with an elastic band. Dust the inside of the funnel with talcum powder to provide a slippery surface.

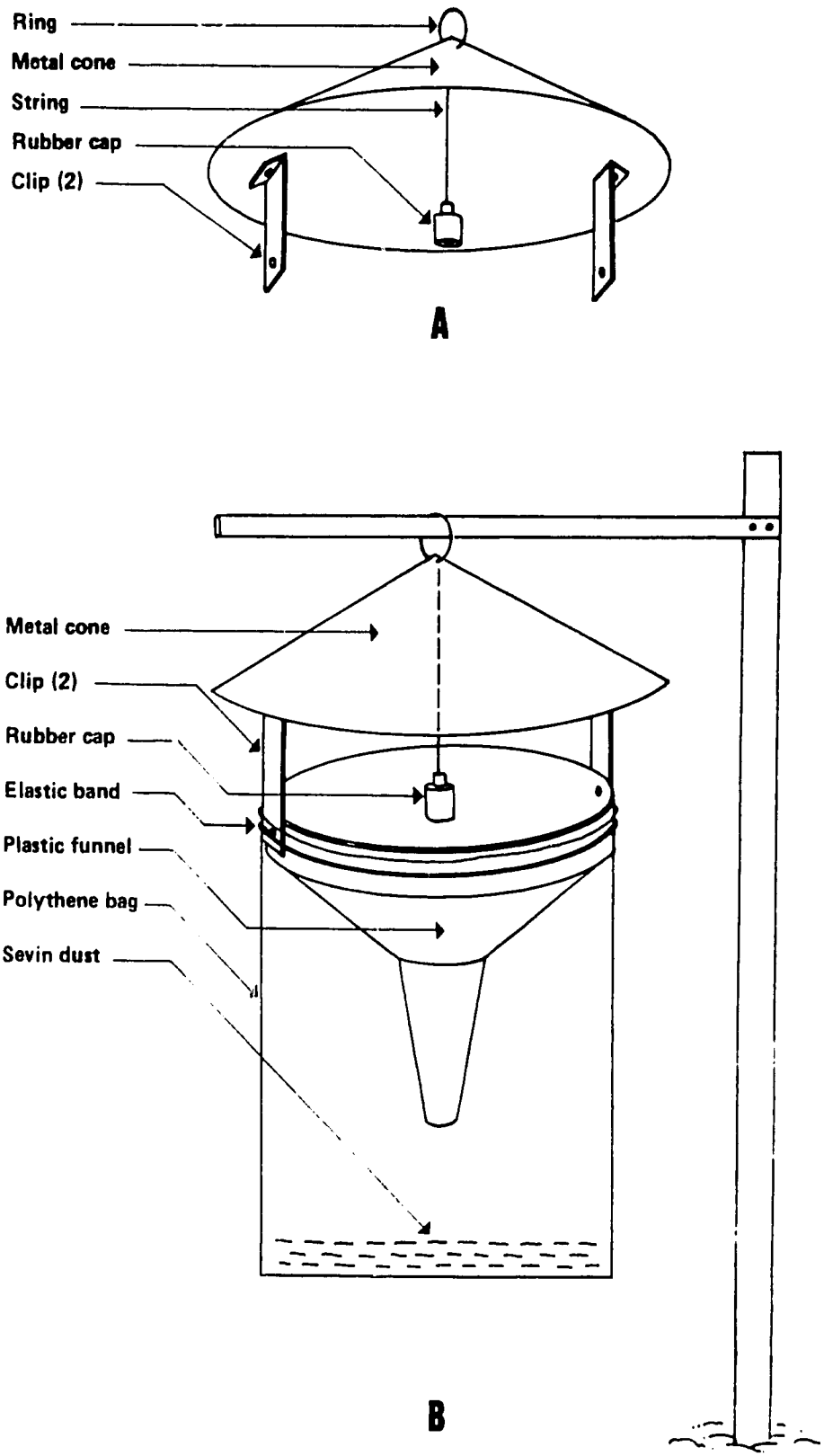

Figure 1. Funnel trap

Water trap. Fill a pan or tray (Fig. 2) with water up to 2 cm from the top. Add a few drops of any detergent so that the water will penetrate the moth's wings more easily and prevent flight. Cover the pan with a hood (metal, plastic, or cardboard) from which is suspended a rubber cap impregnated with the pheromone. The cap should be positioned centrally 2 cm above the water. To increase trapping efficiency, use a brown-colored hood or cover the hood with a dark-brown cloth.

Sticky trap. The sticky traps (Fig. 3) should be placed in the field with the pheromone side away from the wind. Test this trap design in combination with the funnel and water traps to identify the most effective design for use under a specific local situation. If other trap designs are used, they should also be tested in combination with funnel and water traps.

When monitoring all trap designs, place two traps per field, one week after planting, 50 m apart within the crop. Place the traps 40 cm above the ground. These should be serviced daily; however, if this is not possible, weekly servicing is sufficient. To determine the most effective trap design, use a randomized block design with a minimum of 4 replicates per trap. Daily, for at least two weeks, count the number of moths trapped. Rotate the traps daily after every evaluation to avoid positional effects. Use Appendix B for data collection.

The number of traps to be used for direct control of PTM depends on moth population density. Experiments with varying trap densities are needed to determine the number of traps required to reduce tuber damage to acceptable levels. For example, in Peru PTM populations are high during the dry summer season, often reaching 2000 moths per trap per day. Under these conditions, it is necessary to use 42 traps per hectare.

Cultural Control

The four cultural practices described in this section have been successful in reducing PTM damage and should be considered for use. Use Appendix A for data collection.

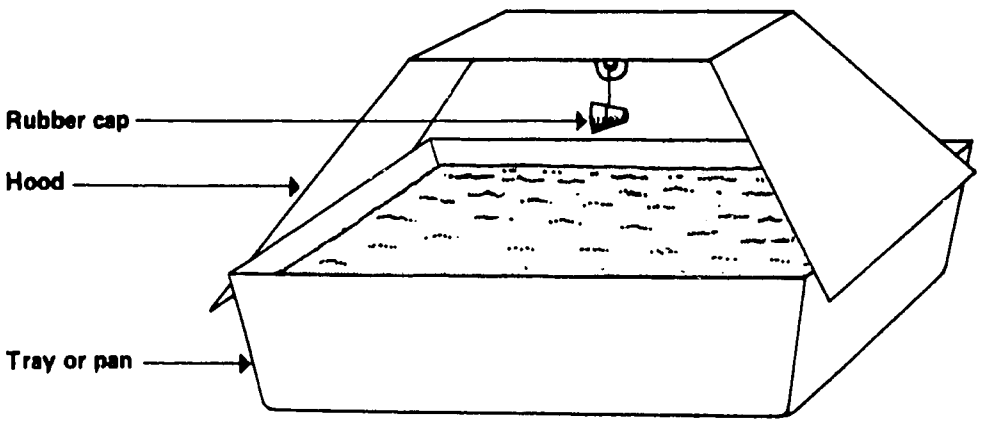

Figure 2. Water trap

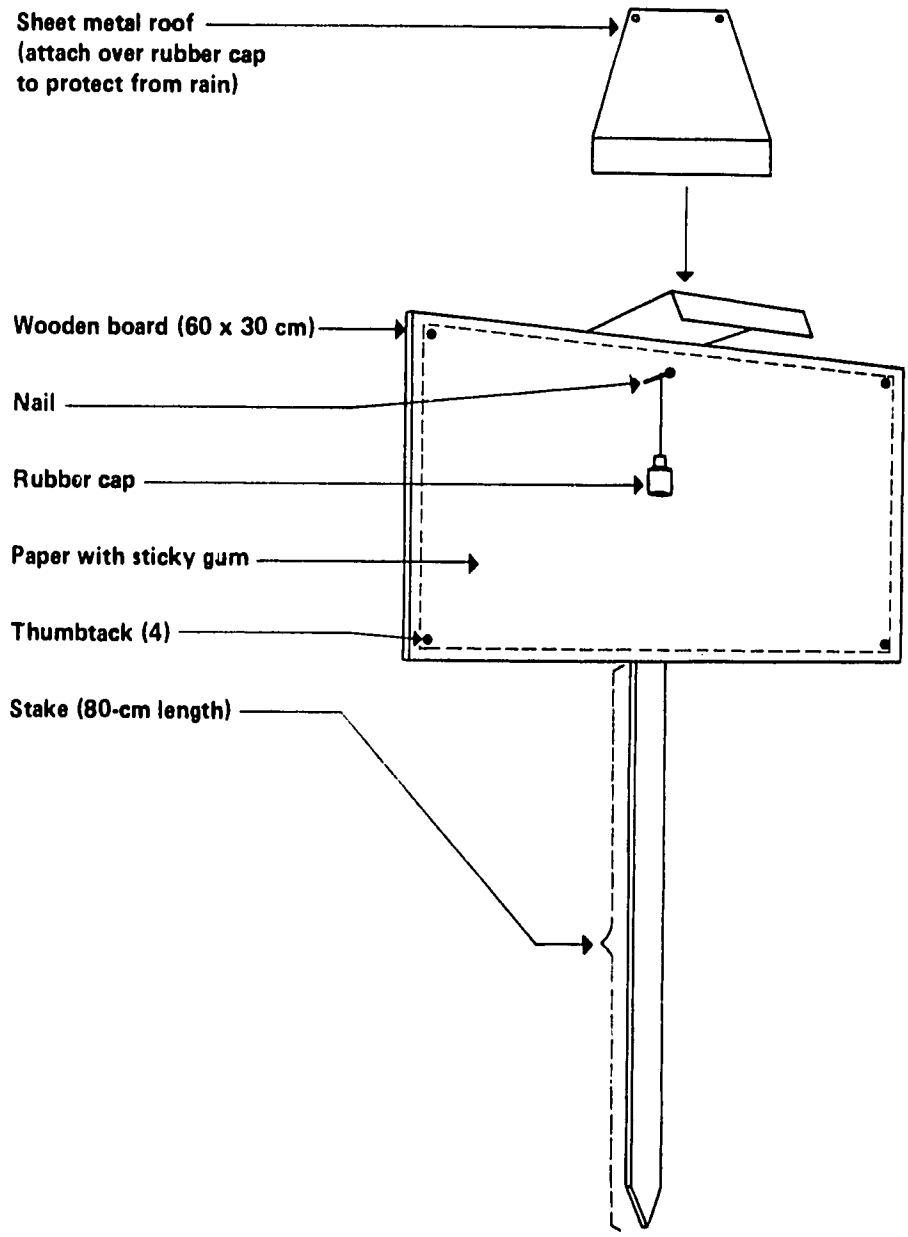

Figure 3. Sticky trap

Depth of planting. Tuber damage by PTM is reduced by deep planting, for example, at depths of 15 cm or deeper. We recommend that the field be ridged 6 to 7 weeks after planting so that tubers are buried at least 25 cm below the soil surface. Where PTM populations are expected to cause severe tuber damage, ridging twice, once at 6 weeks and then at flowering, will reduce the number of tubers infested.

Irrigation. Timely and adequate irrigation minimizes soil cracking and thereby reduces tuber infestation. Also, the interparticle soil spaces are reduced in moist soil conditions, thus preventing entry by moths and larvae. If water is applied incorrectly, it will cause soil compaction and cracking, which exposes tubers to possible PTM attack. This control method requires three essential practices: careful irrigation, maintenance of good soil tilth, and wet conditions that are effective in repelling PTM.

Sanitation. At harvest all tubers must be removed from the soil and transported quickly from the field. Immediately destroy the remaining plant material, preferably by collecting and burning all debris. Afterward, cultivate the soil and destroy any remaining tubers, since volunteer plants form foci of infestations. Any wild *Solanaceae* should be destroyed, since they act as reservoirs for PTM populations.

Cropping pattern. Early planting and harvesting reduces PTM damage in areas where the early planting season is cold. Infestation levels are reduced by crop rotations in which susceptible crops, such as potato, tobacco, tomato, and eggplant, are not planted in the same ground in two successive years.

Biological Control

Attempts at biological control of PTM have been sporadic and have given variable results. In areas where entomologists and laboratories are available, existing parasites and predators should be evaluated for their effectiveness in controlling PTM. If local parasites or predators are not successful in controlling PTM, the parasites *Copidosoma koehleri* and *Apanteles subandinus*, both from South America, could be introduced for trials. These two parasites have provided clear-cut successes in controlling PTM in Zambia and Cyprus.

Scientists interested in testing these parasites against PTM should write to the Director, Commonwealth Institute for Biological Control, Gordon Street, Curepe, Trinidad, West Indies.

Chemical Control

Several insecticides are reported to be effective against PTM. In Peru, for example, foliar application of Methomyl (Lannate) has provided effective control when applied at 90% wettable powder at 1.3 kg active ingredient/ha when more than 2 larvae per plant are found. National Programs could evaluate this insecticide along with those found effective under local conditions. Emphasis should be on identifying selective, local chemicals that have the least effect on natural parasites and predators. Follow the same row and plant spacing and plot layout described under Resistance (page 2). Use Appendix A for data collection.

Integrated Programs in the Field

When PTM populations are low, the individual controls described earlier may be effective when used alone. Under such instances, experiments should be conducted to identify the most promising control. In areas where adult PTM populations are high, these components may not provide good control when used alone and other integrated programs must be developed. The following PTM control packages may be evaluated to identify the most effective method:

Integration of cultural practices + selective insecticides + sex pheromones
Cultural practices + selective insecticides
Cultural practices + biological control + selective insecticides + sex pheromones + PTM-resistant potato clones
PTM-resistant potato clones + cultural practices

Appendix A can be used for data collection when testing these control combinations.

INTEGRATED CONTROL IN STORES

The following control measures can be used as components of an integrated approach to PTM control in stores:

- resistance
- sex pheromones
- water
- physical barriers and natural insect repellents
- biological and chemical insecticides

In areas where PTM populations are low, these components should be first evaluated individually. Where PTM populations are high, these components could be tested according to the various combinations listed in Table 1 (page 14). In addition to researching the best combination of control components to develop an efficient integrated program for PTM control in stores, we recommend integrating postharvest practices with field control methods. Through these methods, plus rigorous prestorage selection, the number of infested tubers that are harvested and placed into stores can be reduced. Additionally, while it is not practical to make a store completely moth proof, it is essential that stores be constructed or modified to restrict entry.

Resistance

Although immunity to PTM damage has not been reported, different levels of tuber damage can be identified through proper screening trials. To screen small quantities of different clones for PTM resistance, select the stores that have a high PTM population. Six tubers of each clone, as well as 6 tubers of known susceptible varieties, should be distributed using a randomized block design. Each tuber should be placed in a paper bag that is kept open at the top for PTM entry. Although it is difficult to provide moths with equal access to all tubers being evaluated, the possibility of escapes is reduced by providing six replicates for every clone under test.

During the dormancy period (first 2 months in storage), evaluate all tubers for: 1) total number of tubers damaged, and 2) number of holes per tuber caused by larval feeding. In the third month when tubers are sprouting, evaluate each tuber for: 1) total number of sprouts, and 2) number of sprouts damaged, and deduct (1-2) to get the total number of viable sprouts. Do not apply insecticides during screening. PTM damage is commonly accompanied by soft rot; if rotting is present, count the number of tubers rotted. Use Appendix C for data collection.

In seed storage, sprout damage by PTM is the single most important factor; therefore, clones with 3 to 4 viable sprouts should be selected. In susceptible varieties, usually 100% of sprouts become damaged. Clones identified for possible PTM resistance should later be multiplied in the field. When sufficient tuber samples are available, these clones should be tested under a "no-choice" situation to determine if the clone has maintained its resistance. For such a test, place 1000 tubers divided into lots of 50 in wooden seed crates.

This approach, even though time-consuming, provides a long-term solution to PTM control. Other control components, described in the following sections, can provide more immediate solutions until the resistance component is identified.

Sex Pheromones

In stores, sex pheromones can be used for monitoring and mass trapping of PTM. An effective trap design, such as the funnel type, is essential; however, alternative trap designs as described in the section under Integrated Field Control (pages 3-6) should be tested. If the store is small, test each trap design without replications. Evaluate the traps daily by counting total number of PTM caught. The traps should be rotated daily to avoid any positional effects.

Continue the trapping studies for a minimum of 14 days. At the end of this period, select the most effective trap design based on total number of moths captured. Use Appendix B for data collection.

Trapping efficiency is increased when traps are placed at the same height as the stored potatoes. The number of traps per store depends on PTM

population level and amount of tuber damage. In stores where heavy tuber losses have been experienced, use 2 traps per 10 m^2 of storage area to capture the newly emerging males.

Water

Experiments in Peru have shown that wetting the walls of the store is an effective method for reducing PTM infestation. In diffused-light seed stores, a pipe system can be installed (e.g., from an irrigation canal) so that water drips down the walls in a curtain-like manner.

A similar system could be used for consumer stores (e.g., the charcoal-walled store at CIP, San Ramon, Peru). Water appears to provide a barrier against moth entry from the outside and reduces store temperature through natural evaporative cooling (cooler temperatures usually delay the life cycle of PTM).

Natural Repellants

Research has shown that covering tubers with chopped dry foliage of naturally occurring weeds can provide both a physical barrier and a repellant action against PTM. Foliage of weeds like Lantana sp., a weed found in many tropical countries, and Muña (Minthostachys sp.), a weed found in the high Andes, can be collected fresh and later air-dried at ambient temperatures. Crush the dried foliage either by hand or by placing it in a cloth bag and beat with a stick. Spread the crushed foliage in a thin layer about 2-cm thick over the stored tubers. Tubers treated in this manner are significantly (<3%) less damaged than uncovered tubers. If these weeds do not grow in your area, you can try other species. The species selected may be planted around the stores, but these plants must be protected from other pests (e.g., Lantana sp. attracts white fly) through proper control. Use Appendix C for data collection.

Biological Control

The biological insecticide Dipel, containing active spores of Bacillus thuringensis, is effective against PTM and is available commercially in some developing countries as a wettable powder or dust. In Peru, the dust formulation has been more effective than the wettable powder. A single,

prestorage application of the dust at 3-4 kg/t reduces damage significantly, but the tubers must be completely covered. Use Appendix C for data collection.

Biological control using naturally occurring parasites (see Field-Biological Control, page 8) should be investigated whenever possible.

Chemical Control

Dust formulations of insecticides are longer lasting and more effective than liquid spray formulations and are more appropriate for use in stores. Fenvalerate dust (0.1% at 2 kg/t) used prior to storage is effective until the tubers begin to sprout. When sprouting begins, use repeated dust applications to protect the growing sprouts. Because of its low toxicity to mammals, this synthetic pyrethroid is considered safe for use on consumption potatoes. The manufacturer's recommendations and the prevailing food additive regulations should be strictly followed when any chemicals are being applied to consumer potatoes.

The continuous use of any insecticide must be limited, because of the possible development of PTM resistance to insecticides. If feasible monitor resistance by using the methods described by the Food and Agricultural Organization (FAO). If PTM resistance is encountered, try other suitable insecticides to which PTM is susceptible and alternate their use. Fenvalerate, wherever commercially available, should be included along with locally used insecticides to identify the most effective chemicals. Use Appendix C for data collection.

Methods and Experimental Designs

Natural repellants, the biological insecticide *B. thuringensis*, and chemical insecticides can be tested for their effectiveness in reducing PTM damage to seed tubers. The testing can be done according to the methods and experimental designs described below.

Use 50 tubers of a PTM susceptible variety (e.g., Revolución or DTO 33) and place in small, wooden seed crates (36 x 28 x 18 cm). Each crate is considered a replicate, and 4 replicates per treatment are laid out in a randomized block design. All treatments should be exposed to natural PTM

infestation inside diffused-light seed stores maintained at ambient temperatures. After 120 days, or after the locally required seed-storage period, observe 10 tubers per replicate for: 1) number of tubers damaged, 2) total number of sprouts, 3) number of sprouts damaged, and 4) total tubers rotted. Use Appendix C for data collection.

Suggestions for an Integrated Program in Storage

Initially, it is necessary to estimate the severity of PTM infestation pressure and whether the individual control methods suggested above can be applied in the existing storage situation. If PTM populations are high, two or more control components may be combined for more effective control (Table 1).

Table 1. Possible Combinations for Testing PTM Control in Storage

Treatment combinations[a]	Water on walls	Insect-repellant weeds	Biological insecticide	Sex pheromone	Chemical control
1	+[b]	+	+	+	-
2	+	+	-	+	+
3	+	+	-	+	-
4	+	-	-	+	+

[a]The same treatment combinations can be tested in stores without water and sex pheromones.

[b]+ = with; — = without.

Through experimentation, develop the best possible integrated approach with emphasis on minimum use of insecticides. The important combinations that are found to be effective should be tested for two seasons in a "no-choice" situation before recommending their use locally.

APPENDIX A

Data Collection (Field Trials)[a]

Region	Country	Site
Person responsible	Date planted	Date of evaluation

Treatment or clone no.	Replication	Plant no.	No. of PTM larvae or mines			Total PTM larvae or mines/plant	Parasites	Predators	Other pests				25 tuber samples at harvest			Class ratings	Other observations
			Shoot tips	Leaves	Stems				Mites	Aphids	Cutworms	Others	No. damaged	No. clean	% tubers damaged		

[a]Use with field experiments related to: 1) screening for PTM resistance, 2) cultural practices, 3) chemical control, and 4) control combinations.

APPENDIX B

Data Collection (Pheromone Trial)

Region	Country	Site
Person responsible	Date planted	Date of evaluation

Treatment or trap type	Date evaluated	No. of PTM moths per trap				Mean PTM moths per		Other observations
		1	2	3	4	Day	Week	

APPENDIX C

Data Collection (Storage Trials)[a]

Region	Country	Site
Person responsible	Date initiated	Date of evaluation

Treatment or clone no.	Replication	Total tubers	Tubers rotted	Sample of 10 tubers/rep				Percentage (%)			Other observations
				Total damaged	Total holes	Total sprouts	Total sprouts damaged	Tubers rotted	Tubers damaged	Sprouts damaged	

[a]Use with storage trials related to: 1) natural repellants, 2) biological control, and 3) chemical control.

APPENDIX D

Scoring Tubers for PTM Damage

When tuber numbers are low and they are needed for further trials, follow a scoring system based on the number of mines caused by PTM larvae.

No. mines/tuber	Class rating
0 - 1	1 (very slightly damaged) Resistant (R)
1 - 2	2 (slightly damaged) Moderately damaged (MR)
2 - 4	3 (damaged) Susceptible (S)
4	4 (highly damaged) Highly susceptible (HS)

When tuber numbers are high, tubers can be cut into half and scored on the basis of total area mined by PTM larvae within the cut tuber.

Area mined by PTM larvae in cut tuber	Class rating
0 - 1/8	1 (very slightly damaged) Resistant (R)
1/8 - 1/4	2 (slightly damaged) Moderately damaged (MR)
1/4 - 1/2	3 (damaged) Susceptible (S)
1/2	4 (highly damaged) Highly susceptible (HS)

Based on the scoring system, determine the percentage of damaged tubers in each category. Select clones with tubers in the class rating of 1-2. The threshold level for larval infestation in foliage is 2 larvae per plant. Clones with more than 2 larvae per plant are usually more susceptible.