PN-ABD-564

C8-205

Asian Institute of Technology
Bangkok Thailand

FARMER DRIVEN ELECTROSTATIC LOW VOLUME SPRAYER

Innovative Scientific Research US-Israel CDR Program
Grant No. 936-5544-G-00-8057-00

First Progress report for the period
ending February 28, 1989

Division of Agricultural and Food Engineering
Asian Institute of Technology
Bangkok, Thailand

FARMER DRIVEN ELECTROSTATIC LOW VOLUME SPRAYER

First progress report for the period

ending February 28, 1989

Submitted by

Prof. Chandra Prakash Gupta, Principal Investigator

Prof. Gajendra Singh, Co-Principal Investigator

Mr. M. Parameswarakumar, Research Associate

Division of Agricultural and Food Engineering
Asian Institute of Technology
Bangkok, Thailand

March 1989

CONTENTS

Chapter	Description	Page #
	Title Page	i
	Contents	ii
	Summary	1
I	General	1
II	Research Personnel	2
III	Developments in Electrostatic Spraying Technology	2
	3.1 Electrostatic Charging Methods	3
	3.2 Developments in Corona and Contact Charging Methods	3
	3.3 Developments in Induction Charging of Spray Droplets	4
	3.4 Review related to Target Selection	6
IV	Electrical Conductivity Tests	7
	4.1 Theoretical Background	7
	4.2 Experimental Methods and Materials	7
	4.3 Results and Discussion	8
V	Field Simulater for Conducting Laboratory Spray Tests	8
	5.1 Spray Tool Carrying Frame	8
	5.2 Motor and Cable Arrangement	8
	5.3 Power Supply for Spinning Disc of Sprayer	9
	5.4 High Voltage Supply Control	9
	5.5 Targets Table	9
	5.6 Wind Barrier	9
VI	Target Selection	9

VII	Design of Charging Circuits	10
	7.1 Current and Power Requirement	10
	7.2 Charging Cirucit	12
VIII	Trip by Principal Investigator	12
IX	Procurement Details of Equipments Ordered and Status	13
X	Plans for the Next Reporting Period	14
	References	15
	Tables	18
	Figures	22

FARMER DRIVEN ELECTROSTATIC LOW VOLUME SPRAYER

SUMMARY

Existing methods of electrostatic charging of spray liquids were studied through extensive review of past researches. Developments in these methods of spraying by Contact, Corona or Induction charging to achieve better deposition are discussed. Tests were performed to measure the electrical conductivity of locally available spray chemicals with a view to determine the chargeability of the spray liquids. The fabrication details of field simulator for running the laboratory spray tests are reported. The design procedures and circuit details of charging circuit are included. The research personnel has been recruited. The principal investigator visited research laboratories in U.S.A, U.K. and India and discussed the technical aspects of the reserach projects with the leading researchers in this field. The necessary equipment for the project were selected in consultation with Prof. S.E.Law the consultant of this project and purchase orders have been placed with the firms for their procurement as early as possible.

I GENERAL

For the period from September 1, 1988 to February 28, 1989 the following activities were undertaken:

(a) Hiring of personnel,

(b) Trips by Investigators,

(c) Construction of field sprayer simulater for laboratory spray applications,

(d) Construction of simulated targets,

(e) Procurement of laboratory space,

(f) Design of charging circuits,

(h) Tests to assess the chargeability of locally available spray chemicals,

(i) Procurement of equipments.

II RESEARCH PERSONNEL

The research personnel of the USAID Farmer Driven Electrostatic Low Volume Sprayer at Asian Institute of Technology comprises of one Research Associate and two Masteral Students and one Technician. Their details are listed below.

1. Mr. M. Parameswarakumar, who holds a M.Engg degree with specialization in Agricultural Machinery and Management was hired as a Research Associate initially for a period of one year starting September 1, 1988.

2. Mr. Bhumrung Intachoat, who has 3 years of experience and has certificate of vocational training was hired as a technician.

3. The two Masteral students Mr. S. Ganapathy and Mr. Hadi Suryanto are working on development of electrostatic sprayer and comparitive performance of different type of sprayers used by Thai farmers, respectively.

III DEVELOPMENTS IN ELECTROSTATIC SPRAYING TECHNOLOGY

Electrostatic charging is not a new technique and is aged about 100 years. Some of the earliest recorded work on electrostatic spraying was done with glass capillary tubes. Lord Rayleigh investigated the stability of isolated charged drops in 1882 and showed that if the total surface charge of a drop is increased, a charge level is reached above which disruption of drop into stable charged fragments occurred.

Vonnegut and Neubauer (1952) produced streams of highly charged liquid droplets of 100 µm at a rate of 100 drops/s by applying a potential of 5 kV to the capillary tube. They further reported that if the capillary tube potential is raised even higher than what is required, then a very fine monodisperse mist of drops of the order of 1 µm was found to emanate from the top of the tube through a solid angle of about 180°. They added that these monodisperse mist were observed only when high electrical resitivity liquids were sprayed at positive capillary potentials.

Coffee (1971) and Byass et al. (1979) suggested that the balance of gravitational, dynamic and electrostatic forces on particles of the spray favors the using of electrostatic force for the transport of the fine drops at least over fractions of a meter. The probability of striking on the biological target is higher for a charged droplet owing to its phenomenon of following the path of the electric lines of force.

The electro-mechanical properties of spray liquids are very important. (Carlton and Bouse, 1978). The rate at which electrical charge accumulates on the new surfaces, by virtue of an imposed electrostatic field, depends upon the liquid electrical relaxation time. Lane and Law (1979) described that in an induction charging system the electrical relaxation time

should be minimum compared to the droplet passing in the ionizing field. But in the case of corona charging system, the velocity of droplets in the ionizing field has little effect on the amount of charge on droplets (Eckert, 1982).

3.1 Electrostatic Charging Methods

There are three systems used for charging the spray droplets namely i) Corona charging method, ii) Contact charging method and iii) Induction charging method (Hasse,1976; Law, 1978; Marchant, 1979).

In corona charging, a high voltage electrode releases large number of positive and negative ions of which ions with similar potential are repelled by the electrode and ionize the zone around it. After intensive bombardment liquid droplets are charged with the same polarity as the electrode. (Adams, 1967). Corona charging could be possible with both pressure and rotary atomizers.

Contact charging occurs when high potential is directly connected and maintained to the nozzle or to the liquid flow system, the charge transfer being by conduction. This system works well with conductive liquids (Moser and Schmidt, 1983).

In Induction Charging, electric field force is used to charge the spray droplets. Here, the charge on a droplet is opposite to the charge of the electrode (Splinter, 1968) and theoretically the spray liquid should be conductive. The induction charging method will work within the resistivity limit of 10^{-1} to 10^{6} Ωm (Law, 1980).

3.2 Developments in Corona and Contact Charging methods:

Corona charging method is widely used in paint industry and only a few researches have used this technique for agricultural spraying. The basic theory behind the corona charging was clearly explained by Adams (1967) and Law (1976). In using the corona charging method, the electric field strength at any point depends on the voltage strength and the distance from the charging point. The field strength is effective up to a few meters distance. Corona charging requires the use of very high voltages in order to ionize the air surrounding the liquid. The high electric field necessary for ionization is usually obtained by raising a pointed electrode to a voltage in excess of 20 kV (Moore, 1973).

A system relying solely on electrostatic field for both disintegration and charging has been developed by ICI and has now undergone extensive field trials on cotton crop. This hand-held sprayer known as Electrodyn, was developed by Coffee (1978) for pesticide applications which works only for a special oil-based non-aqueous formulations using contact charging. The fact that a failure of the power system results in complete failure of both atomization and charging processes has rendered the Electrodyn

not a fail-safe system.

Ganzelmeier and Moser (1980) used contact charging for hydraulic nozzles and Arnold and Pye (1980) used contact charging with spinning disc atomizers. Moser and Schmidt (1983) reported that contact charging can be used well with conductive liquids.

Hussain (1984) studied five different types of portable sprayers (Figures 3.1-3.5). The contact and corona charging system were used to charge the spray droplets. While using the method of electrostatic spraying, as far as possible, he tried to maintain the original condition of the equipment with a minimum cost in charging them. He used the charging voltages of about 25-75 kV and reported that the contact charging was more efficient than the corona charging method. But modification of the sprayers was easy with corona charging as the contact charging requires costly insulations.

The high voltages associated with these two types of charging will lead to problems such as surface tracking and insulation breakdown, under practical agricultural conditions. It seems sensible therefore to use a lower voltage system if possible (Marchant, 1985).

3.3 Developments in Induction Charging of Spray Droplets:

Induction charging of droplets were widely used in agricultural spraying as it requires a less voltage to charge the droplets (Law, 1966; Law and Lane; 1973, Marchant and Green, 1982). But charging droplets by induction still has practical problems associated with it. The major problems (Marchant and Green, 1982) are of two types.

If the liquid is charged, the tank of the sprayer is at a high voltage which necessitates a very high insulation systems. If the induction electrode is far away from the stream of liquid a very high voltage is needed to provide sufficient electric field and charge (Ganzelmeier and Moser, 1980).

Conversely, if the electrode is charged and the liquid is earthed, following problems were encountered (Marchant and Green, 1982):

a) If the induction electrode is at a high potential it must be supported from the spray boom through a insulator. Both the electrode and spray boom attract the spray drops and so it is very difficult to keep the insulating support dry.

b) Further the liquid collected on the electrode forms into points under the action of electric field. The pointed shape intensifies the electric field which leads to local ionization of the air. These free charges thus present in the air combine with the charged spray drops and neutralize it.

Law and Bowen (1966) conducted test on the charging efficiency of dielectric and metal spherical-torroidal induction heads using hollow-cone hydraulic nozzle (Fig. 3.6) in which the liquid is earthed. It suffered from both the above said problems and lead to the equipment being unreliable under field conditions.

Carrol and Keller (1978) used high velocity air streams from a aircraft blower (Fig. 3.7) to blow the liquids from the induction electrode so as to avoid the liquid getting contact with the electrode but it is not suitable for use with ground based sprayers.

Law (1978) and Frost and Law (1981) used air stream associated with twin fluid atomizer to carry the spray droplets. Liquid is fed to the nozzle from an earthed reservoir maintained under pressure. A near sonic air flow in an annular stream atomises the liquid. The atomisation region is subject to a high electric field by means of a ring electrode which is embedded in an insulated section at the exit of the nozzle (Fig. 3.8). The electrode is maintained at a relatively low voltage of a few hundred volts with respect to the earthed metallic parts of the nozzle. The demerits of this method is that the air power required is very large of the order of 400 W per nozzle and its use was therefore limited only with tractor mounted spray booms. Spray deposition tests were conducted on broccoli, corn, cotton and cabbage and reported two to seven fold increase in the deposition on the crops.

A charged hydraulic nozzle (CHN) was developed by Marchant and Green (1982) using an earthed induction electrode. Aqueous liquid under pressure is forced through a linear slit which is maintained at a high potential (Fig. 3.9). The induction electrodes are aspirated to prevent water build-up instead of blowing the air. They reported that this sprayer performed well by overcoming the problem of short circuiting of power supply caused by wetting of electrodes. Raising the sprayer tank to high voltage is avoided by using a relatively long thin tube to supply liquid to the nozzle. Tests were carried on potato and sugar beet and observed a four fold increase in deposition.

A novel method of directing pesticide to a target has been developed and demonstrated by Inculet et al. (1983). Two aerofoil linear nozzles are mounted side by side and air is blown past at high velocity to atomise emerging liquid (Fig. 3.10). Induction charging electrodes embedded in the insulated air duct adjacent to the nozzles are energised by a 6 kV d.c. power unit. One nozzle is fed with water and the other with pesticide liquid, so that dual spray clouds of charged water and pesticide drops are generated. If the twin nozzle arrangement is oriented with the uppermost nozzle fed with water the space charge forces due to the charged water drops tend to direct charged pesticide drops downwards the earthed target, thus, wind drift of pesticide away from target is minimized. In the other way with a lower cloud of water aerosol the upper insecticide aerosol penetrated upper

regions of a room with satisfactory deposition into areas that would have been difficult to reach otherwise.

To avoid the problems encountered in induction spraying additional kinetic energy to the spray drops can be provided by using spinning disc atomizers (Marchant, 1985). Hopkinson (U.K. Patent office, 1981) described techniques for preventing the deposition of spray on the electrode by using aerodynamic forces. He states that either a source of compressed air or vanes mounted on the atomizing disc could be used to provide an outward air flow in the region of the disc edge so carrying drops away from the influence of the electrode.

Marchant (1985) developed a novel and simple method of effectively removing liquid from the induction electrode by rotating the electrode along with the atomising disc which spins off the liquid (Fig. 3.11).

3.4 Review related to Target Selection:

Electrostatic spray deposition is known to be dependent on the geometrical characteristics of the target being sprayed. The previous researchers have studied several types of targets for the study of deposit phenomenon in relation to the response of the targets.

Law and Lane (1979) conducted experiments on cylindrical, foliar targets, planar targets and found that proper selection of shape, geometry and surface area of the targets affected the spray deposition by 2 to 5 times. They concluded that the general analysis of spray deposition on an arbitrary shape will not hold good to a specific condition at one hundred percent level.

Anantheswaran and Law (1981) have studied the effects of surface area on electrostatic precipitation onto planar targets such as turfgrass at different growth level. They came out with the conclusion that the deposition was observed to be a direct function of foliage leaf area.

The spherical and planar targets were analysed to study the electrostatic deposition so as to identify the gaseous discharge currents induced to flow between incoming charged spray cloud and grounded points on the targets such as leaf tips (Law and Lane 1982). They observed seven fold increase in deposition and the protruding grounded points were reduced the deposition to 3 fold for spherical and planar targets.

Giles and Law (1985) have studied the space charge deposition onto cylidrical targets of varying diameter and cylinder-to-cylinder spacing. The deposition efficiency was significantly affected by cylinder spacing and elevation of target arrays and they concluded that the target geometry has a linear relationship with the charged spraying of the droplets.

More practical lattice and planar models with leaf like plate projections were studied by Hadfield (1987) to verify the mathematical models of the transport of charged spary developed to find the deposition pattern. He identified the drop velocity and charge to mass ratio as the key factors for obtaining desired spary distribution on given target arrays.

IV ELECTRICAL CONDUCTIVITY TESTS

To quantify the chargeability of locally avialable spray chemicals by electrostatic-induction process, the electrical conductivity of the chemicals were studied for different additive concentrations. The additive used in the study was de-ionized water having electrical conductivity 3.3 µS/cm at 28°C.

4. Theoretical Background:

The electrical conductivity depends upon the resistivity of the spray-liquids and can be defined as (Moore, 1973)

$$\Omega = L / (A R) \quad \text{mho/m}$$

where, Ω electrical conductivity, mho/m
L length of liquid column, m
A cross-sectional area of liquid column, m^2
R resistance of liquid column, Ω

The electrical conductivity determines the charging phenomenon of spray liquids and it is the factor that decides the method of charging for a given spray liquid. For a liquid of very low electrical condutivity (10^{-4} mho/m) such as oil based spray liquids, contact charging and induction charging methods can not be employed, whereas in the case of liquids of very high electrical conductivity, employing the above said methods of charging requires very good insulation for the whole spraying unit. Corona charging system can be used for liquids of wide range of electrical conductivities.

From theoretical considerations the conductivity domains of chargeability by electrostatic induction are expected to be $\sigma > 2\times10^{-6}$S/m and $\sigma>10^{-7}$S/m for water-based and for vegetable oil based spray liquids respectively (Law and Cooper, 1987).

4.2 Experimental Methods and Materials

Experiments were conducted using conductivity meter from Labotec, WTW, Werkstätten, W.Germeny, Model LF91. The required solution was prepared by adding the specified proportiopn of the chemical and de-ionized water. Five replications were taken. Then the probe was immersed into the solution and shaked well to get a constant reading. The temperature and the electrical conductivity were noted down for each replication.

4.3 Resulsts and Discussion:

The results were tabulated in the Table 4.1 and shown in figures 4.1-4.4. From the results it is concluded that the chemicals Parzon and Azordin-60 can be used directly or with de-ionized water with induction charging whereas the chemicals Gramaxone and U-46 can be used with de-ionized water only for induction charging leading to less active ingredient for a particular condition of spraying. The chargeability by corona charging will also be a problem with these two chemicals as they are highly conductive in nature and probably contact charging may be better suited.

V FIELD SIMULATOR FOR CONDUCTING LABORATORY SPRAY TESTS

The field simulator was constructed to carry out the laboratory experiments under different operational parameters. The main components of the field simulator are listed below:

1. Spray tool carrying frame
2. Motor and cable arrangement
3. Power supply for spinning disc of sprayer
4. High Voltage power supply
5. Targets table
6. Wind barrier

5.1 Spray Tool Carrying Frame

The main function of this frame (Fig. 5.1) is to hold the sprayer rigidly when experiments are being carried out at different forward speeds and at different heights of applications. The height of application can be varied between 20 and 60 cm by sliding the sprayer holding frame in the slots of main spray tool carrying frame. This height corresponds to the elevation difference between the disc's horizontal plane and the top of the target surface.

5.2 Motor and Cable Arrangement

The purpose of this unit is to operate the spray tool carrying frame at different forward speeds. A 10 h.p motor is used to provide the needed power. The motor and cable arrangement was modified from the previous test bin used by Ramesh Babu (1987) to install the high voltage power supply. Cables are provided through three pulleys and a drum to have a good accessibility of forward and reverse motion of the spray tool carrying frame. Cut off switches are used to fix the length of experimental run and also to prevent the problem of tipping of spray tool carrying frame at higher speed of operations. Operating swithes are used to control the movement of the frame and to connect or disconnect the power supply to the spinning disc or to the electrode.

5.3 Power Supply for Spinning Disc of Sprayer

A variable D.C power supply unit is used to provide various voltages and currents to run the disc at various speeds. The maximum power supply is 12 V and 2 A current and provides a maximum speed of 9000 rpm of the disc. The photograph of the power supply unit is shown in Figure 5.2.

5.4 High Voltage Power Supply

A variable high voltage supply available commercially will be used. Three ranges of power supply have been selected for each of the charging method. The ranges are 0-3 kV, 3-15 kV and 15-25 kV for induction, corona and contact charging respectively.

5.5 Targets Table

A 4.0m x 2.1m targets table made out of water proof boards, served as a base for fixing the targets. It is supported by L angle frames to withstand the load. The photograph of the targets table with grid spacing (Ramesh Babu, 1987) is shown in Figure 5.3.

5.6 Wind Barrier

The purpose of the wind barrier is to control the speed of the wind. The fabrication of this unit will be completed for the next reporting period. Devices to control relative humidity and tempearature will also be installed during the next reporting period.

VI TARGET SELECTION

Ramesh Babu (1987) made a simulation model to represent the paddy crop. The data on age, leaf area, height and approximate shape of the plants were collected for paddy crop RD-23 starting from 7 days after transplanting until harvesting stage. While collecting the data, six representative samples were considered, the average of those values are tabulated in the Table 6.1. The data on these parameters were analysed and the general pattern of variation were identified. The relationship between the age and the height of the plants (Fig. 6.1) was observed to be linear except during growth-maturity stage and the leaf areas was observed to be maximum for 63 days age of paddy (Fig. 6.2). Based on the above, the selected target dimensions (Fig. 6.3) are:

a) Surface Area = 0.24 m^2,

b) Target Height = 0.60 m,

c) Target Spacing = 0.50 m and

d) Grid Spacing = 0.25 m.

VIII DESIGN OF CHARGING CIRCUITS:

The following requirements of the electrostatic charging unit are considered:

1) The voltage developed should be very high in the range of 1 to 25 kilo volts in three different ranges viz., 1-3kV, 3-15kV and 15-25kV.

2) The output should be smooth and unipolar.

3) Depending on the charging method used the unit should deliver sufficient current.

4) The unit should be able to operate on a 12V or 6V DC input power supply.

5) It should be compact in size and light in weight.

7.1 Current and Power Requirement

The requirement of current and power can be calculated from Rayleigh's equation:

$$q = 8\pi (\varepsilon_0 \sigma')^{1/2} . r^{3/2}$$

Where q = the maximum charge carried by a single droplet, C

r = radius of the droplet, m

ε_0 = permittivity of free space

σ' = surface tension of liquid, N/m

The charge to mass ratio corresponding to above charge is given by

$$\frac{q}{M} = \frac{6 (\varepsilon_0 \sigma')^{1/2}}{p} r^{-3/2}$$

Where M = mass of the droplet, kg
and p = density of the liquid, kg/m^3

This equation shows that smaller the raidus r, larger the q/m ratio. The diameter of the droplet is a function of the disc rotational speed and it is given as,

$$\frac{1}{d} = 19.5\ w$$ between 209 and 733 rad/sec (Marchant, 1985).

Where, d = droplet diameter, m
w = rotational speed of the disc in rad/sec

The uncharged spray has a droplet size of 70 μm at a disc speed of 700 rad/sec. Using the σ and p values of water we get,

$$\frac{q}{M} = \frac{6\sqrt{(8.854 \times 10^{-12} \times 72 \times 10^{-3})}}{1000} (70 \times 10^{-6})^{-3/2}$$

$$= 8.18 \times 10^{-3} \text{ C/kg}$$

The nozzle flow rate of the sprayer is .5-2 g/sec (30-120 mL/min). For a flow rate of 0.5 g/sec the current requirement for charging will be,

$$= 0.00818 \text{ C/kg} \times 0.5 \times 10^{-3} \text{ kg/sec} = 4.09 \ \mu\text{A}.$$

If the charging voltage V=1500 volts (for induction charging) and I=4.09 μA then the power consumption is

$$P = 1{,}500 \times 4.09 \times 10^{-6} = .006135 \text{ Watt}$$

$$= 6.135 \times 10^{-3} \text{ W}.$$

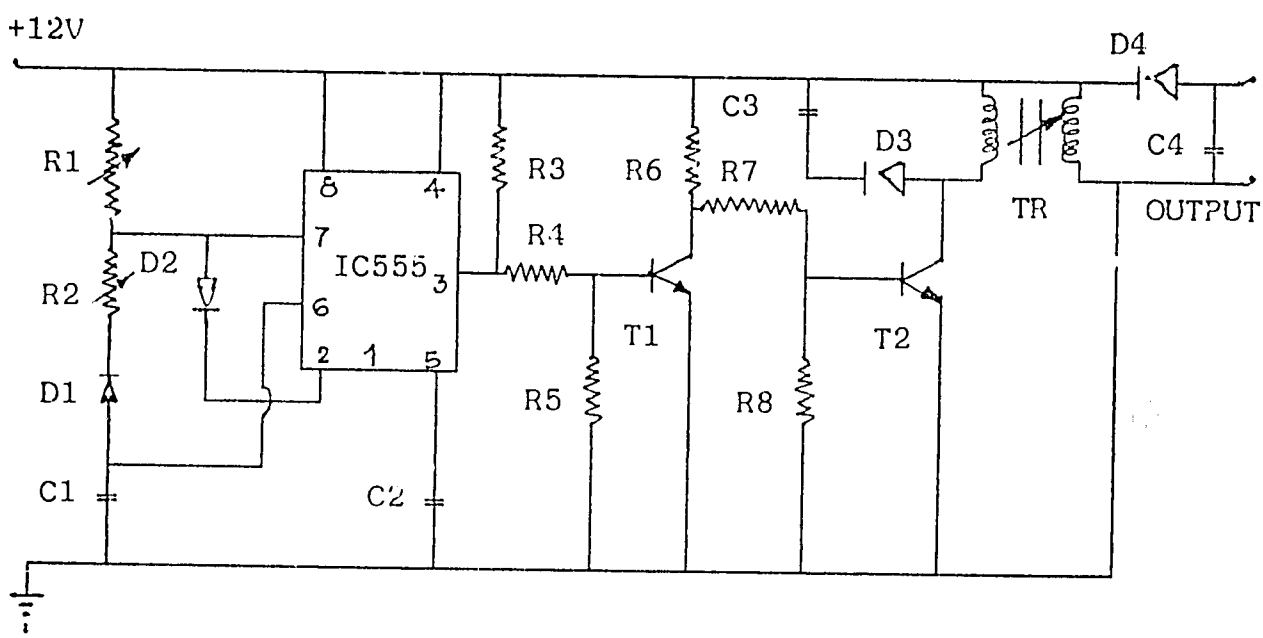

Cirucit Details

7.2 The Charging Circuit

The current-input requirement of the electrode at the pre-corona input voltages of normal operation is typically less than 10 μA and exists only due to surface leakage along the interior dielectric space from the induction electrode to the grounded nozzle body. Thus, electronic power consumption for spray charging is generally less than 25-50 mW leads to simple solid-state power supplies. This dc-to-dc converter cirucit elevates continuously adjustbale voltage inputs of 2-12 V dc to correspondingly higher output levels of upto 25 kV for driving the electrode. Conversion in the miniaturized 50 g circuit is accomplished at a power efficiency of greater than 50 percent by a 25 kHz dual-transister oscillator, a ferrite-core pulse transformer, and Cockcroft-Walton type voltage multiplier-rectifier.

VIII TRIPS BY INVESTIGATORS

Prof. C.P.Gupta, the principal investigator, visited U.S.A, U.K and India between December 12,1988 and January 8,1989. He had attended the Annual Winter Meeting of ASAE held at Hyatt Regency, Chicago from December 13-15. He discussed about the electrostatic charging of spray drops with Prof. H.D.Bowen of North Carolina State University, Raleigh who had come to attend the winter meeting.

During the period December 16-19 he visited University of Georgia, Athens and discussed with Prof. S.E. Law regarding the selection of equipments and designing the charging circuits. He also met Mr. Steven Cooper who demonstrated the performance of his electrostatic spraying system (ESS) using embedded induction elctrode and hydraulic nozzle. He agreed to sell one unit for testing in Thailand. The following equipments were recommended by Prof. S.E. Law for the project:

1. Flurometer Turner Model 450

2. Flow meter

3. Faraday Cage for determining charge to mass ratio

4. Venus High Voltage Power Supply models C-30 and LU-15

5. Technitecs Inc. High Voltage Power Supply, HD12

He visited, Prof. H.D.Bowen at North Carolina State University and visited the electrostatic laboratory to see the various high voltage power supplies used by Prof. Bowen. They had discussions on the saftey aspects of using electrostatic sprayer.

On 3rd January, he visited Chemical Application Group, Crop Division, AFRC Institiue of Engineering Research at Wrest Park, Silsoe, Bedford, U.K. He was shown various on going research projects in electrostatic spraying and spinning disc model

developed by Prof. John Marchant. The discussions were held with Dr. P.C.H.Miller and Mr. Andy Frost on the proposed technical designs, selecting charging circuits, testing procedures and there was exchange of views on field testing of sprayers.

The proposed visit in Bombay to meet Mr. Sharad Patel was cancelled because of the delay in his flight from London. On 6th January, 1989, he met Prof. Kasturi of Electrical Engineering Department of Indian Institute of Technology, Kharagpur. Prof. Kasturi is a specialist in High Voltage Engineering. He agreed for the consultancy of design of high volatage power supply circuit needed for the proposed sprayer unit.

Prof Gajendra Singh visited American Springs and Pressing Works (ASPW) in Bombay, India during 9-10 March 1989. Mr. Ganapathy is working on the development of a electrostatic sprayer at ASPW. Professor Singh reviewed the progress of Mr. Ganapathy's work and discussed with Mr. Sharad Patel and Dr. Syed Ismail plans for further work.

IX PROCUREMENT DETAILS OF EQUIPMENTS ORDERED AND STATUS

9.1 Electrometer Model 614 from Keithly Instruments

Purpose: To measure the charge carried by the droplets. To quantify the charge to mass ratio of spraying.

Status : Equipment has arrived. Now, we are doing installation and caliberation of the equipment.

9.2 Venus High Voltage Power Supply Model C-30

Purpose: To provide the varrying high voltage power supply to the laboratory model sprayer for optimizing the parameters.

Status : The power supply has been shipped from U.S.A. as confirmed by Prof S.E.Law.

9.3 Flurometer Turner Model 450 or 112

Purpose: To study the deposition efficiency of spraying by analysing the concentration of tracer material by flurometric analysis.

Status : Order has been placed. The deleivery period required as quoted by the manufacturer is 130 days.

9.4 Flow Meter (Fisher Scientific Model)

Purpose: To control the flow rate of the spray liquid in the required range of flow. As the flow rates are very very small, not in the range of regular flow metering devices, we need flow meters to meter the flow rate accurately.

Status: Order has been placed. Awaiting for shipping details from Fischer Scientific, U.S.A.

X PLANS FOR THE NEXT REPORTING PERIOD

The fabrication of field simulator will be completed after the installation of wind barrier and temperature and humidity controller. The Flurometer, Flowmeter and power supplies will be procured shortly. Fabrication of Faraday Cage will be completed. Tests on induction charging will be accomplished. For corona and contact charging similar models will be fabricated so that they can be tested separately. Testing the sprayer with induction charging will start after getting all auxiliary equipments. Depending on the time availability, the tests on contact and corona charging will start within the next reporting period. The test procedures and materials will be reported in the next reporting period.

REFERENCES

Adams, J., 1967. Uber die nature liche and kunst liche Aufladung beim Verstauben von pflanzenschutxmitteln. Fortchr. Bericti VDI,-Zeitschrift, Reihe 14, No. 6: Dussel-dorf.

R.C. Anantheswaran and S. Edward Law, 1981. Electrostatic Precipitation of Pesticide Sprays onto Planar Targets. Transactions of ASAE. 24(2): pp 273-276, p 280.

Byass. J.B., Lockwood, A. and R.Andrews, 1979. The effect of electrically charging spray drops on their movement to a cereal crop, Proc. Brit. Crop Prot. Conf. pests & diseases: pp. 295-302.

Carlton J.B. and L.F. Bouse, 1978. Electrostatic spinner nozzle for charging aerial sprays, Transactions of ASAE 21(8): pp.1369-1373.

Carrol,J.W. and P.N.Keller, 1978. Electrostatic induction parameters
to attain maximum spray charge, Transactions of ASAE 21(1): pp. 63-69.

Coffee, R.A., 1971. Some Experiments in Electrostatic Dusting, Journal of Agricultural Engineering. 18(1): pp. 98-105.

Coffee, R.A., 1978. German Patent OLS27 31 712.

Eckert, S., 1982. Die elekrostatische Koronaaufladung von Spritzflüssigkeiten im chemische p flanzens-chutz, Diplom-arbeit, Universität Hohenheim.

Frost, A.R. and S.E. Law, 1981. Extended flow characteristics of the Embedded Electrode spray charging nozzle. J. Agric. Engng Res. 26 pp. 79-86.

Ganzelmeier. H., E. Moser, 1980. Elektrostatische Aufladung von spritzflüssigkeiten zur Verbesserning der Applications Technik Grundl. D. Landt 4: pp. 122-125.

Durham K. Giles and S. Edward Law, 1985. Space Charge Deposition of Pesticide Sprays onto Cylindrical Target Arrays. Transactions of ASAE. 28(3): pp 658-664.

Hadfield, D.J., 1987. The Modelling of Charged Spray Deposition on Artificial Targets. J. agric. Engng Res. (1987) 36: pp 45-46.

Hasse, H., 1976. Anwendung statischer Elektrizität Entoricklungstand, Aussichten, probleme, Reihe Dechema Erfathrungs - austausch, H.

Hussain M. D., 1984. Electrostatic charging of spray liquids of hand and shoulder carried sprayer suitable for third world countries. Unpublished Doctoral Dissertation, Institut für Agrartechnik, Universität Hohenheim.

Inculet, I.I, Hodgson, K.J. and J.G. Millward, 1983. IEEE-IAS Annual Meeting, Mexico city: pp. 1050-1054.

Lane, M.D. and S.E. Law, 1982. Transient charge transfer occuring in living plants undergoing electrostatic spraying. Transactions of ASAE. 25(5): pp 1148-1153, p. 1159.

Law, S.E.,1976. Electrostatic Precipitaion of Low volume Pesticide Sprays on Turf grass. Research Proposal submitted to the US Golf Association Green Section. Transactions of ASAE. 18(1): pp 35-39, & 45.

Law, S.E., 1978. Embedded-electrode Electrostatic-Induction Spray-charging nozzle: theoretical and engineering design. Transactions of ASAE 21(8): pp. 1096-1104.

Law, S.E., 1980. Droplet charging and electrostatic depostion of pesticide sprays - research and development in the USA, BCPC: pp. 85-94.

Law, S.E. and H.D. Bowen, 1966. Charging Liquid Spray by Electrostaic Induction. Transactions of ASAE. 9(4): pp 501-503.

Law, S. Edward and Steven C. Cooper 1987. Induction Charging Characteristics of Conductivity Enhanced Vegetable-Oil Sprays. Transactions of ASAE. 30(1): pp 673-679.

Law, S.E. and M.D. Lane, 1982. Electrostatic deposition of pesticide sprays onto ionizing targets; charge and mass transfer analysis. IEEE Transactions IA-18(6): pp 673-679.

Lord Rayleigh, 1879. On the equilibrium of liquid conducting masses charged with electricity. Proc. R. Soc.: pp 184-186.

Marchant, J.A., 1979. Electrostatic spraying some basic principles. Proc. Brit. Crop Prot. Conf. Weeds.

Marchant, J.A. and Green, R. 1982 An electrostatic charging system for hydraulic nozzles. J. Agric. Engng Res. 27: pp 309-319.

Marchant, J.A., 1985. An electrostatic spinning disc atomiser. Transactions of ASAE: pp. 386-392.

Moore A.D. (Ed), 1973. Electrostatics and its Applications. John Wiley and Sons, New York.

Moser, E., K. Schmidt, 1983. Physiakalishe Eigenschaften und elektrostatisce Aufladung von Spritzflüssigkeiten, Grundl. der Landt., Vol. 33, No. 2: pp. 56-59.

Ramesh Babu, M., 1987. Comparitive Performance of Spraying Mechansism under Normal Application Range of Speed and Height of Operations. M.Engg Thesis No. AE-87-13, Asian Institiute of

Technology, Bangkok, Thailand.

Splinter, W.E., 1968. Electrostatic chaging of agricultural sprays, Transactions of ASAE 11(4): pp. 491-495.

U.K. Patent Specification No. 1599303, 1981. U.K. Patent Office, London.

Vonnegut, B. and L. Neubauer, 1952. J. Col. Science 7 pp. 616-622.

TABLES

Table 6.1 Target Design Data for Paddy Variety RD-23

S.No	Age*	Height cm **	Leaf Area cm^2
1	0	16	40
2	7	19	60
3	14	20	102
4	21	22	176
5	28	25	200
6	35	35	1384
7	42	39	1436
8	49	48	2330
9	56	57	2400
10	63	60	1676
11	70	69	1420
12	77	81	1020
13	84	85	480
14	91	85	400

* Age after transplanting in days.
** Height excluding the root.
(Ramesh Babu, 1987)

Table 7.1 Specifications of the Componenets used in the Circuit of Charging Unit.

Component	Description	Specification
R1	Resistance	100 kΩ, variable
R2	Resistance	100 kΩ, variable
R3	Resistance	1 kΩ
R4	Resistance	820 Ω
R5	Resistance	270 Ω
R6	Resistance	120 Ω
R7	Resistance	47 Ω
R8	Resistance	180 Ω
R9	Resistance	470 Ω
T1	Transistor	SL 100
T2	Transistor	2N 3055
D1	Diode	1N 4148
D2	Diode	1N 4148
D3	Diode	C 2506
D4	Diode	TV 20
C1	Capacitor	330 pF, 15V
C2	Capacitor	0.01 pF, 15V
C3	Capacitor	1 MF, 250V
C4	Capacitor	260 pF, 30kV
IC555	Integrated Circuit	IC555
TR	Transformer	EHT transformer (copper-ferrite)

Table 4.1 Variation in Electrical Conductivity with different chemical concentration

CHEMICAL	CHEM. %	E.C mS/cm
GRAMAXONE Fungicide	10.00	19.500
	20.00	34.600
	40.00	59.200
	50.00	67.800
	60.00	78.300
	75.00	89.900
	100.00	98.800
PARZON Insecti-cide	0.20	0.01720
	1.00	0.03820
	5.00	0.09680
	6.00	0.12054
	10.00	0.15160
	12.50	0.17224
	20.00	0.21980
	25.00	0.23040
	30.00	0.21680
	40.00	0.21220
	45.00	0.10320
	50.00	0.00780
	60.00	0.00502
	100.00	0.00208
MARSHAL* Insecti-cide	100.00	0.0004

CHEMICAL	CHEM. %	E.C mS/cm
U-46 Herbicide	10.00	15.500
	25.00	27.600
	40.00	33.700
	50.00	34.500
	60.00	33.700
	75.00	29.000
	100.00	15.400
AZORDIN-60 Insecti-cide	0.100	0.105
	9.574	7.1
	10.000	7.17
	11.688	7.98
	13.924	8.74
	15.000	9.03
	16.049	9.32
	17.073	9.52
	17.676	9.63
	18.269	9.74
	18.660	9.8
	18.854	9.84
	18.951	9.87
	20.000	9.85
	40.000	7.885
	50.000	5.48
	60.000	3.3
	80.000	0.815
	90.000	0.484
	100.000	0.363

* Marshal is an oil-based formulation which is manufactured by ICI Plant Protection Division as a special formulation to use with Electrodyne.

FIGURES

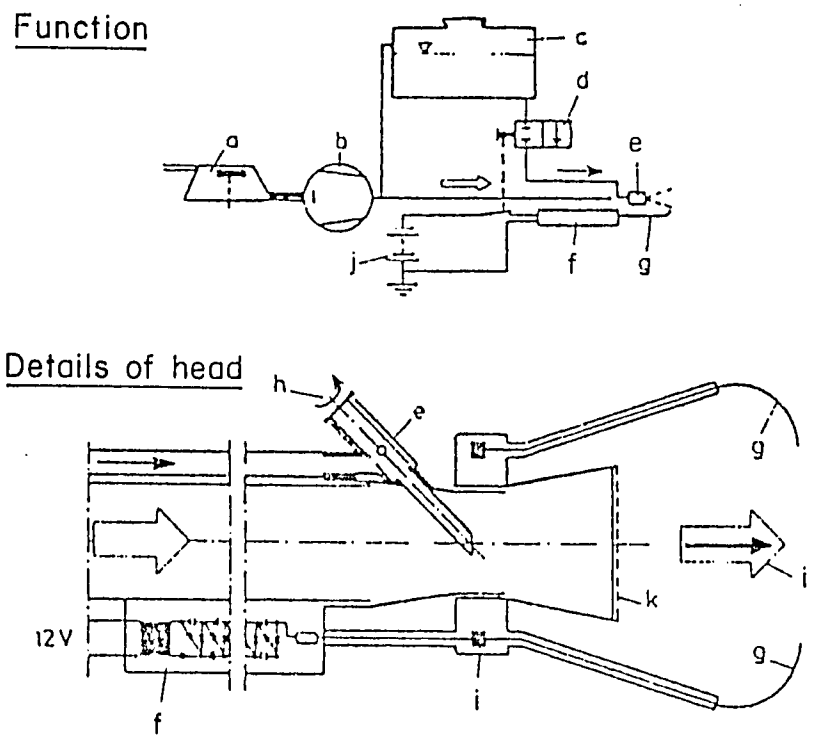

a. Engine
b. Radial blower
c. Pesticide tank
d. ON/OFF valve and switch
e. Shear nozzle
f. High voltage generator
g. High voltage electrodes
h. Ajustable valve
i. High voltage distributor
j. 12 Volt battery
k. Cap of nozzle (metal or plastic)
l. Spray clouds

Fig. 3.1 Knapsack sprayer with an air shear nozzle using corona charging method (Hussain 1984).

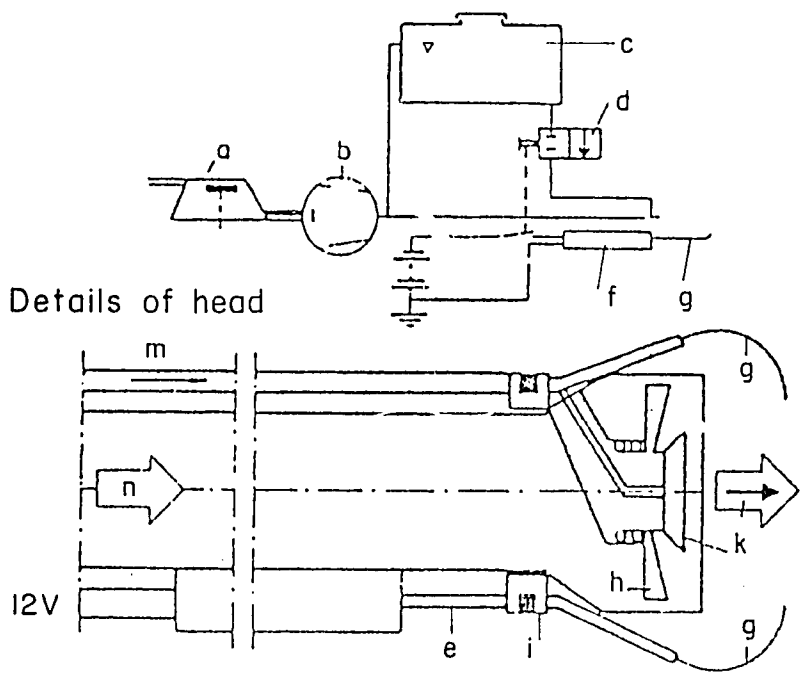

a. Engine
b. Radial blower
c. Pesticide tank
d. ON/OFF valve and switch
e. Plastic pipe
f. High voltage generator
g. High voltage electrodes
h. Propeller
i. High voltage distributor
j. 12 Volt battery
k. Spray clouds
l. Rotary atomizer
m. Flow of spray liquid
n. Air flow from blower

Fig. 3.2 Knapsack sprayer with an air driven rotary atomizer using corona charging method (Hussain 1984)

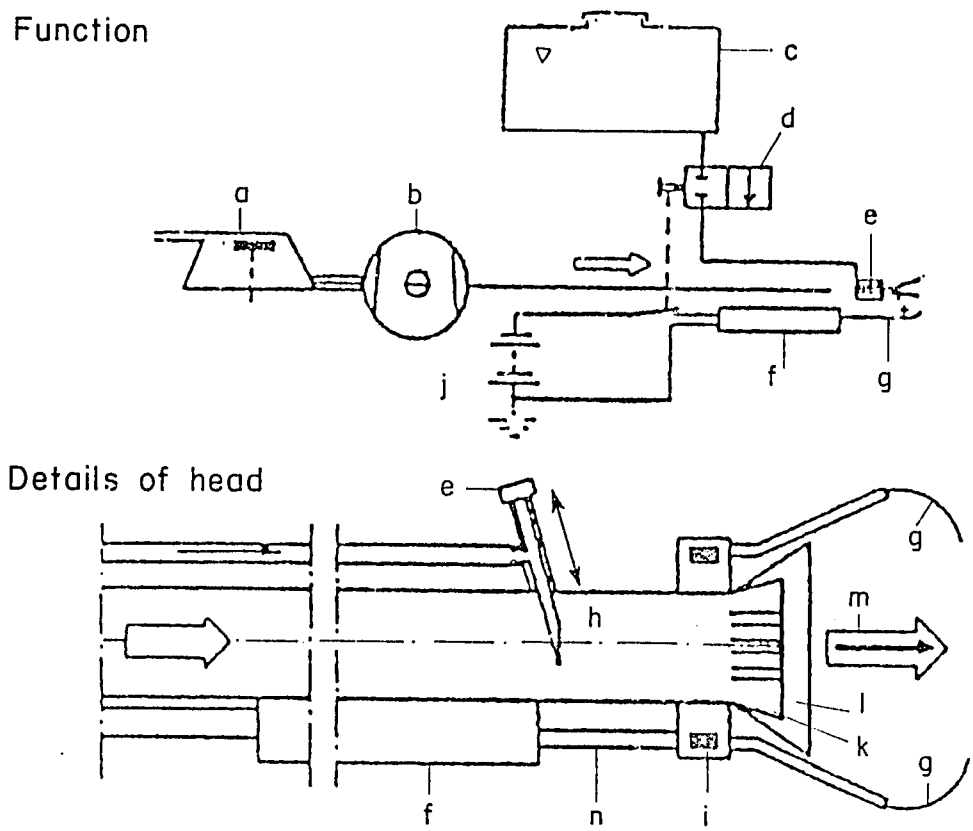

a. Engine
b. Radial compresser
c. Pesticide tank
d. ON/OFF valve and switch
e. Control lever
f. High voltage generator
g. High voltage electrodes
h. Shear nozzle
i. High voltage distribution
j. 12 Volt battery
k. Spray nozzle
l. Outer covering of nozzle
m. Spray clouds
n. Plastic pipe

Fig. 3.3 Knapsack sprayer with a pneumatic nozzle using corona charging method (Hussain 1984)

Function

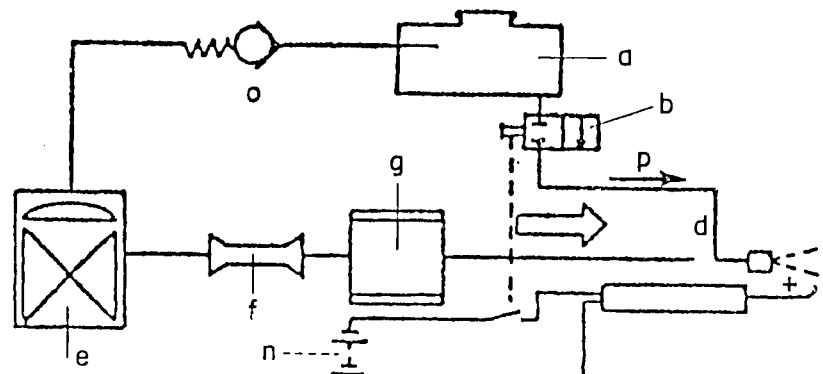

Details of head

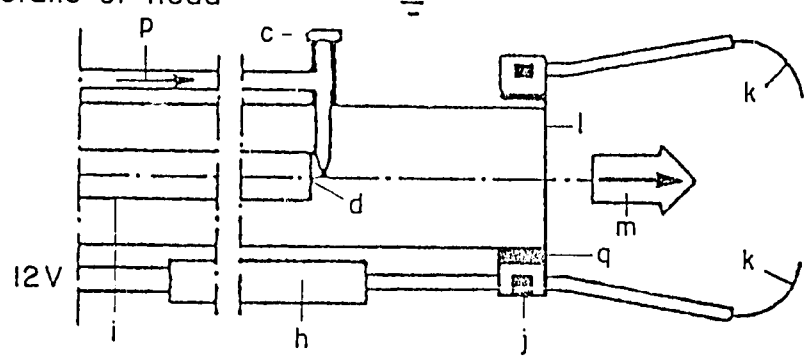

a. Pesticide tank
b. ON/OFF valve and switch
c. Shear nazzle
d. Point of fog generation
e. Diaphragm pump
f. Carburetter
g. Combustion chamber
h. High voltag generator
i. Exhausl pipe
j. High voltage distributor
k. High voltage electrodes
l. Out let port of fog
m. Spray clouds
n. 12 volt battery
o. Check valve
p. Flow of spray liquid
q. Insulator (asbestos)

Fig. 3.4 Fogging machine using corona charging method (Hussain 1984)

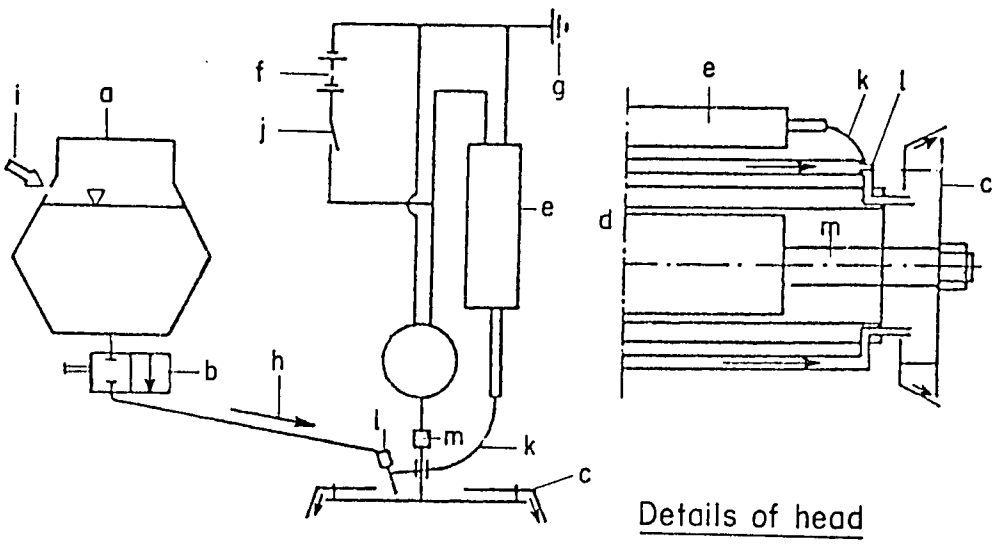

Function

a. Pesticide tank
b. ON/OFF valve
c. Rotary dise
d. 12 Volt. DC motor
e. High voltage generator
f. 12 Volt battery
g. Ground connection
h. Flow of pesticide liquid
i. Air inlet into container for constant head of gravity pressure
j. ON/OFF switch
k. High voltage electrode
l. Shear nozzle
m. Insulator

Fig. 3.5 Handheld sprayer with battery operated disc rotary atomizer using contact charging method (Hussain 1984)

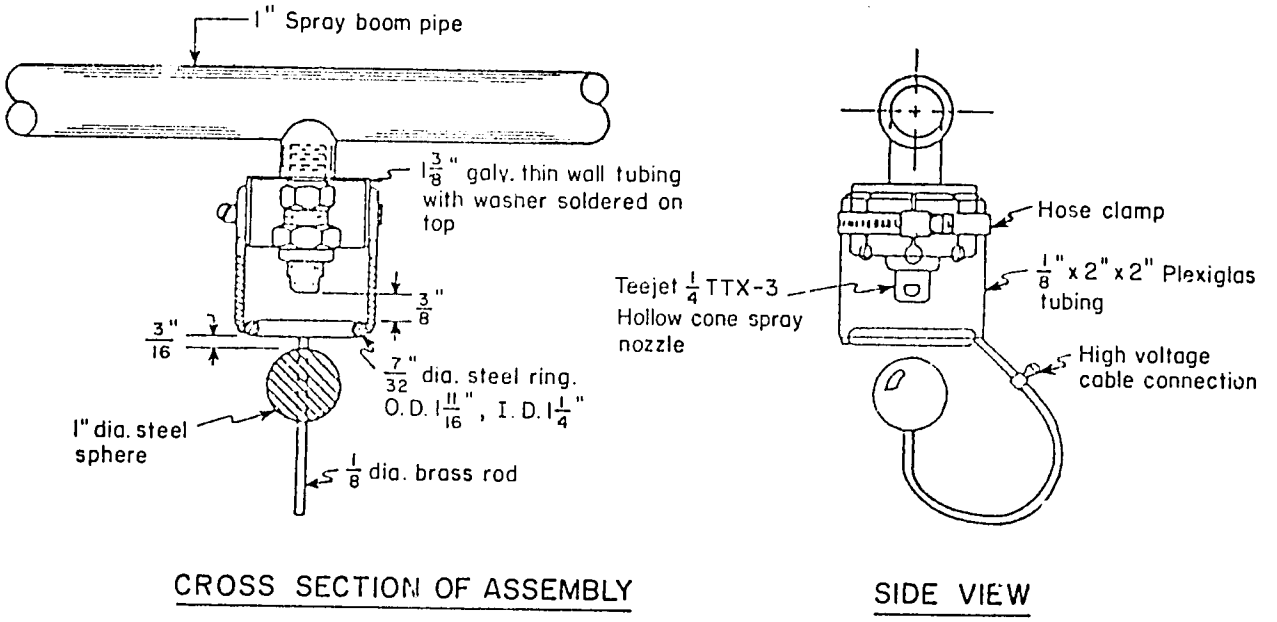

Fig. 3.6 Induction head for field testing of plant coverage by charged sprays (Law and Bowen 1966)

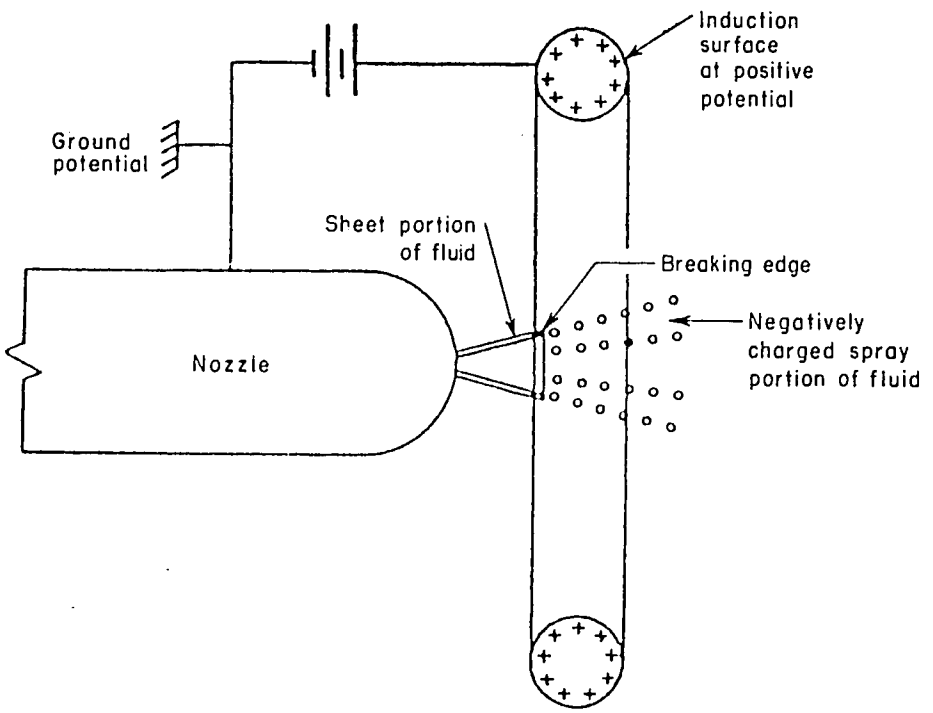

Fig. 3.7 Cross-section of induction-charging spray system using a cone nozzle (Carrol and Keller 1978)

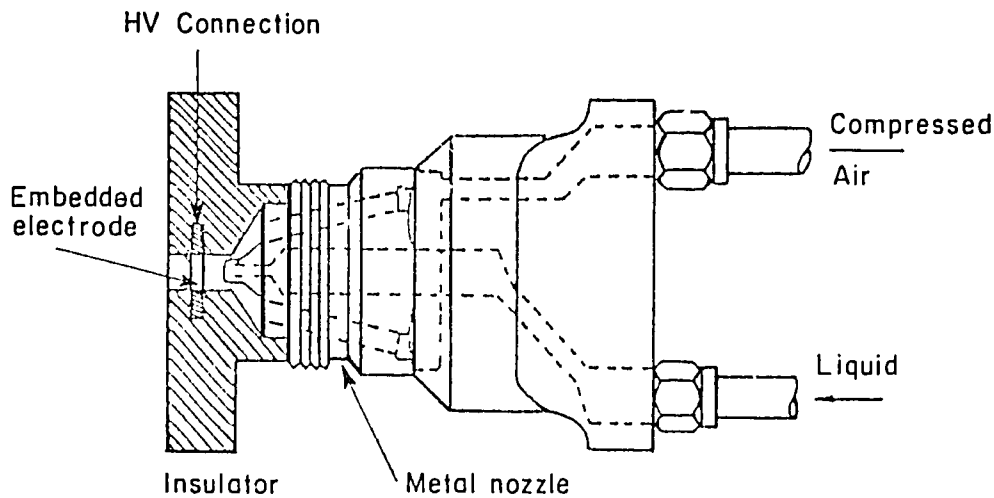

Fig. 3.8 Law's crop sprayer nozzle

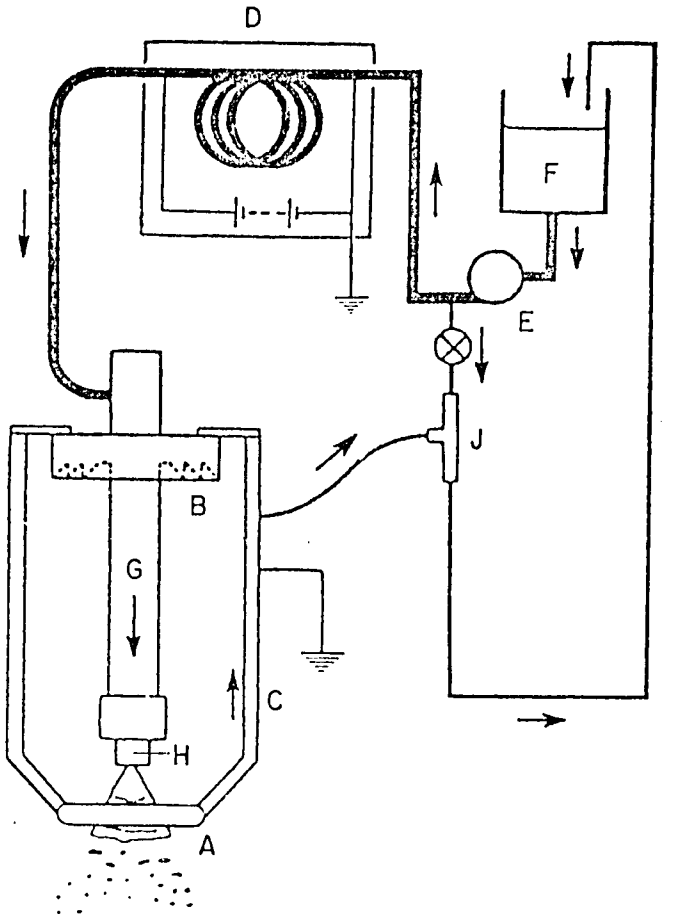

A. Induction electrode
B. Grooved annulus
C. Electrode support leg
D. Isolating tube
E. Main sprayer pump
F. Sprayer tank
G. Nozzle holder stem
H. Nozzle tip
J. Jet pump

Fig. 3.9 Schemetic diagram of charging system (Marchant and Green, 1982)

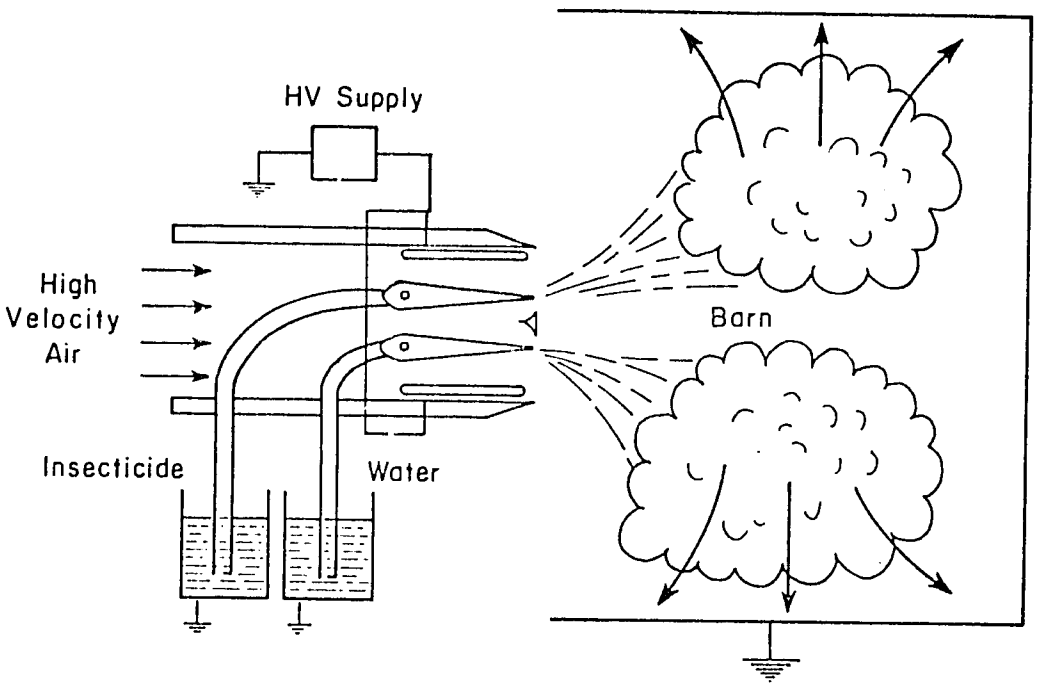

Fig. 3.10 Dual spray insecticide system
(Inculet et al. 1983)

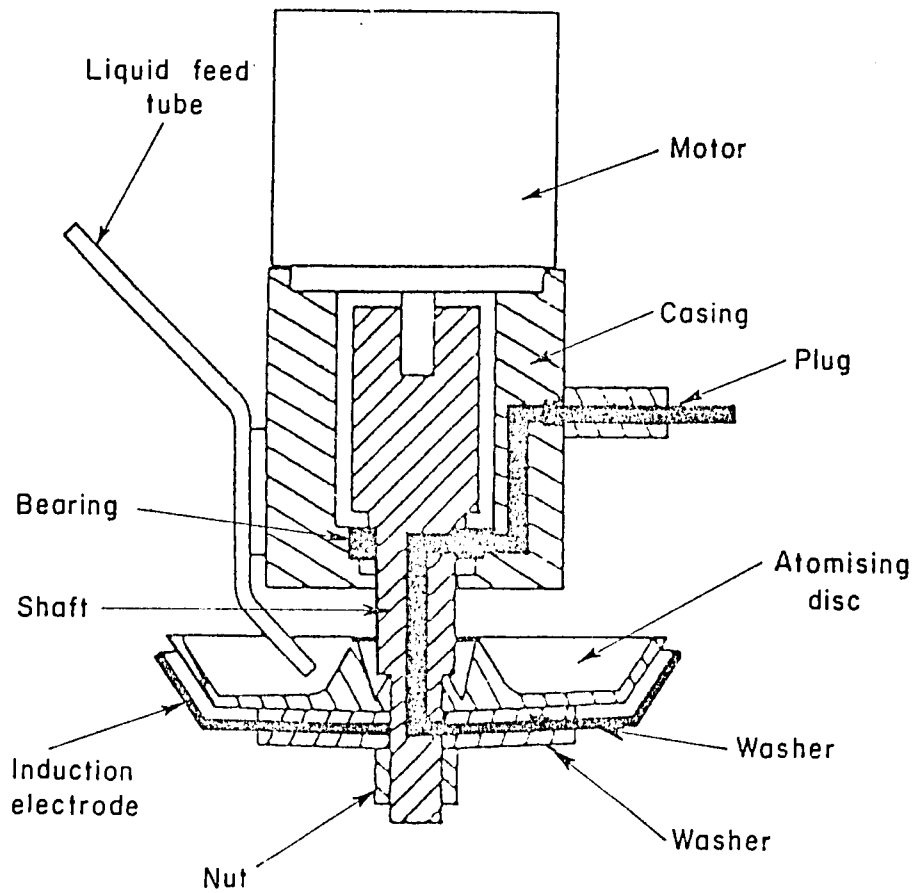

Fig. 3.11 Device for induction charging spray from a spinning disc using a rotating electrode (Marchant 1985).

(Conducting parts shown shaded)

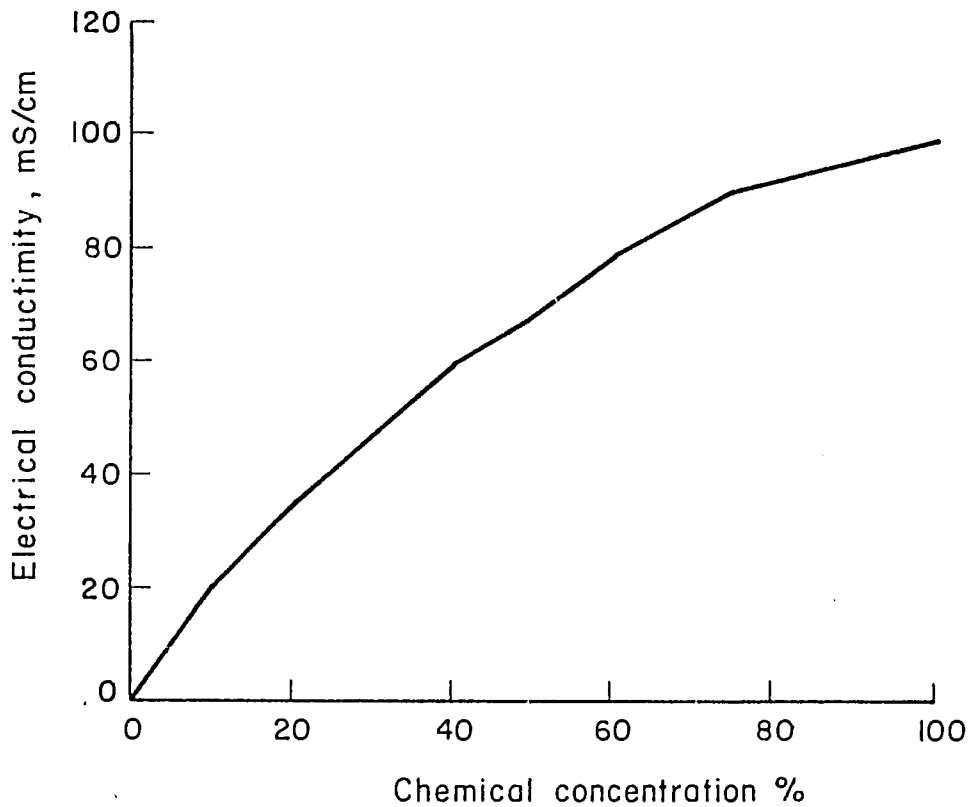

Fig. 4.1 Conductivities of Gramoxxone Containing Various Concentration of Distilled Water

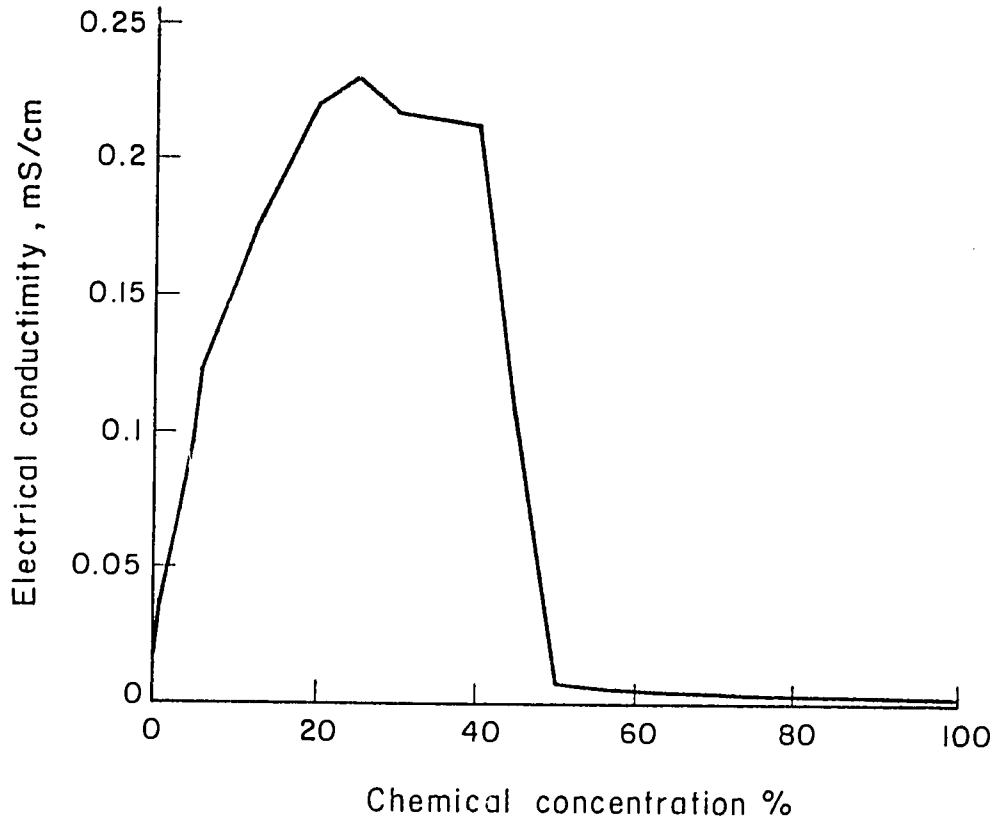

Fig. 4.2 Conductivities of Parzon Containing Various Concentration of Distilled Water

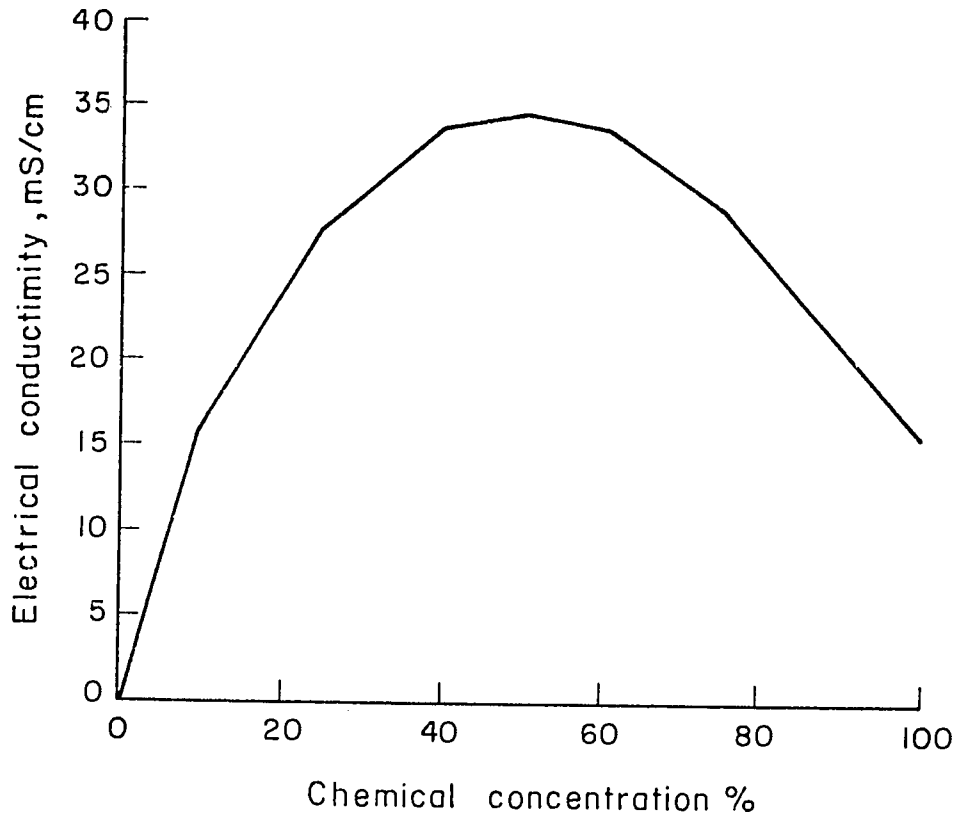

Fig. 4.3 Conductivities of U-46 Containing Various Concentration of Distilled Water

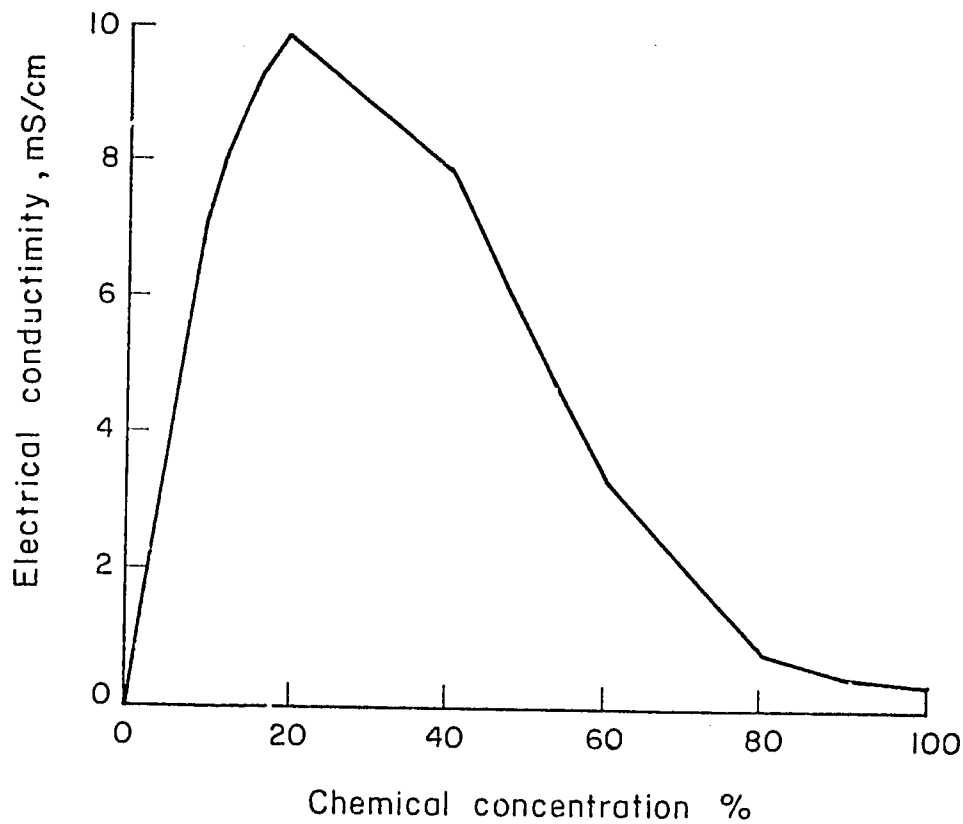

Fig. 4.4 Conductivities of Azordin - 60 Containing Various Concentration of Distilled Water

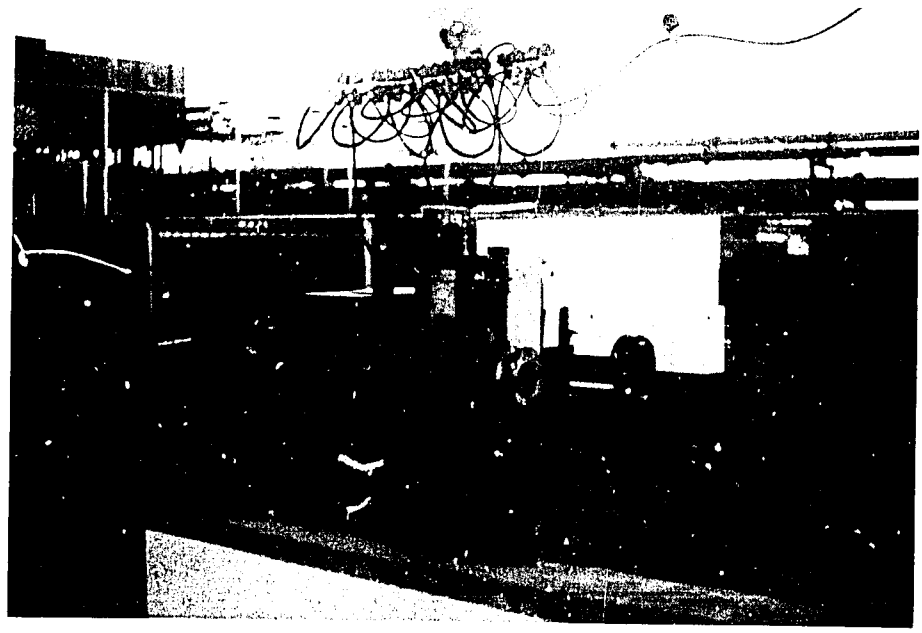

Fig. 5.1 Spray Tool Carrying Frame.

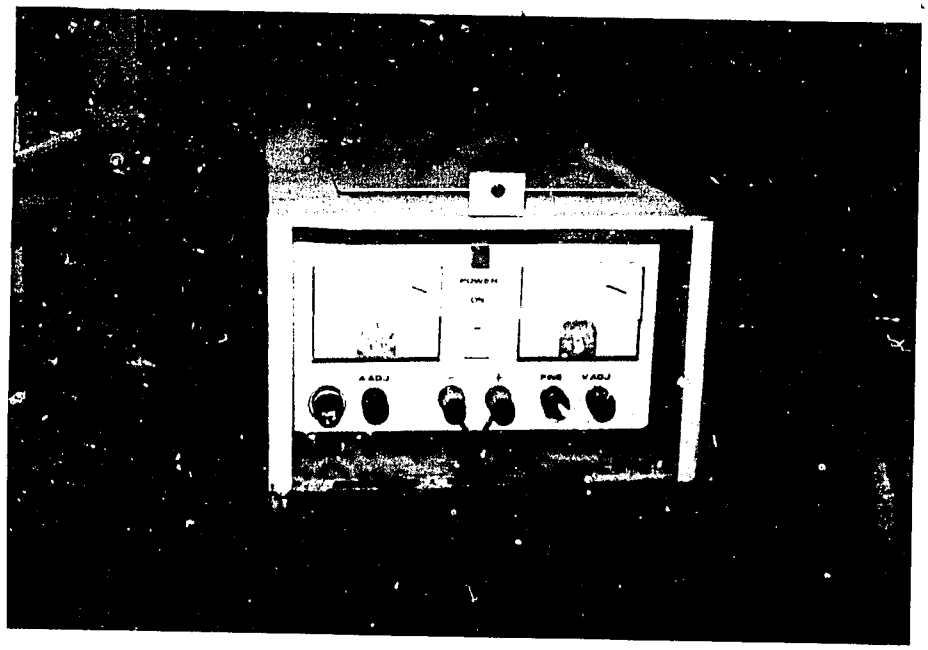

Fig. 5.2 Power Supply for Spinning Disc.

Fig. 5.3 Targets Table

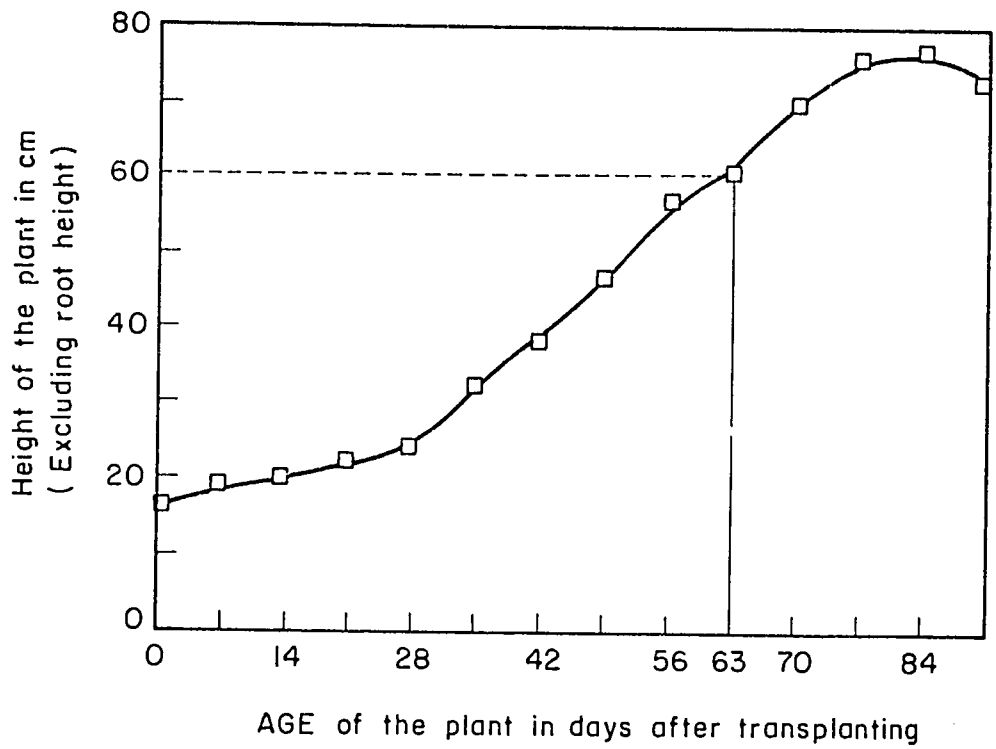

Fig. 6.1 The Relationship between Age and Height of plants.
(Ramesh Babu, 1987)

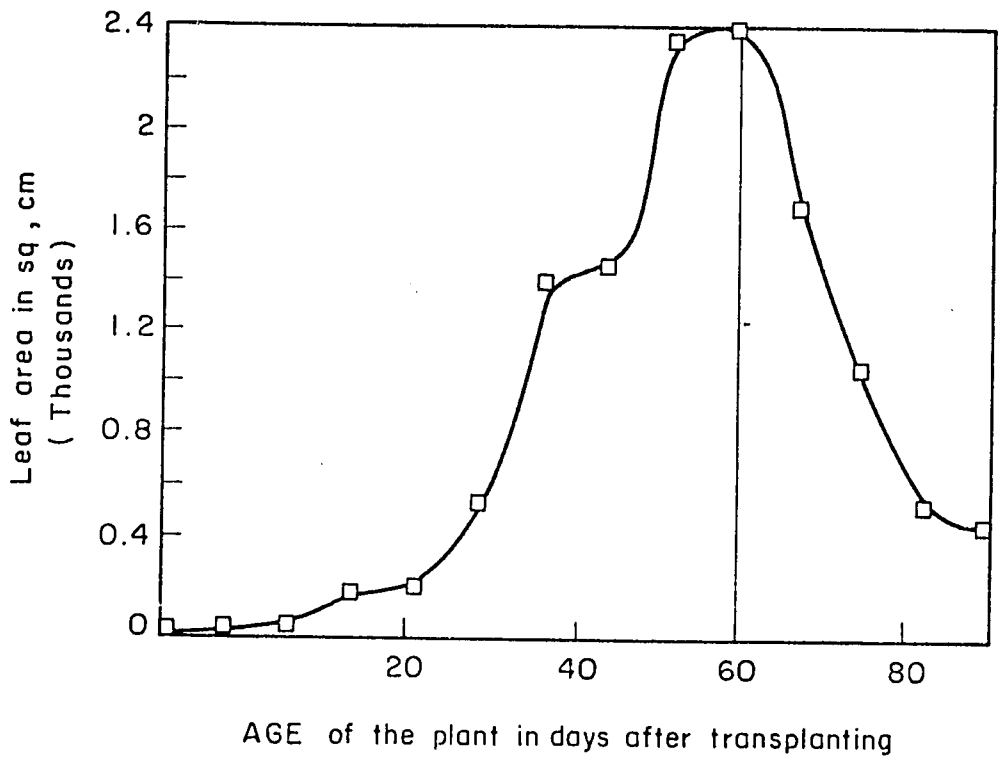

Fig. 6.2 The Relationship between Age and Leaf Area of Plants (Ramesh Babu, 1987)

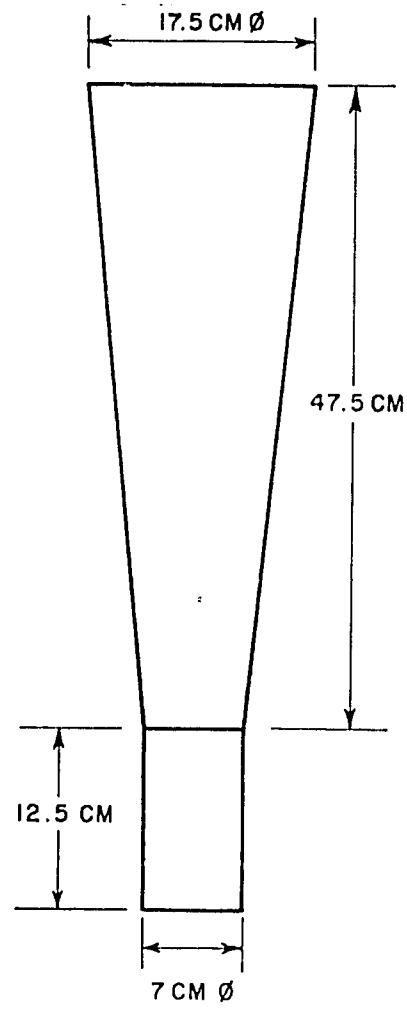

Fig. 6.3 The Dimensions of Selected Target.
(Ramesh Babu , 1987)