PN-ABD-364

WATER AND SANITATION FOR HEALTH PROJECT

COORDINATION AND INFORMATION CENTER

Operated by The CDM Associates
Sponsored by the U.S. Agency for International Development

1611 N. Kent Street, Room 1002
Arlington, Virginia 22209 USA

Telephone: (703) 243-8200
Telex No. WUI 64552
Cable Address WASHAID

The WASH Project is managed by Camp Dresser & McKee Incorporated. Principal Cooperating Institutions and subcontractors are International Science and Technology Institute; Research Triangle Institute; University of North Carolina at Chapel Hill; Georgia Institute of Technology—Engineering Experiment Station.

USAID HANDPUMP PROGRAM IN TUNISIA

WASH FIELD REPORT NO. 100

SEPTEMBER 1983

Prepared For:

USAID Mission to the Republic of Tunisia
Order of Technical Direction No. 63

WATER AND SANITATION
FOR HEALTH PROJECT

WASH

COORDINATION AND
INFORMATION CENTER

Operated by the CDM
Associates
Sponsored by the U.S. Agency
for International Development

1611 N. Kent Street, Room 1002
Arlington, Virginia 22209 USA

Telephone: (703) 243-8200
Telex No. WUI 64552
Cable Address WASHAID

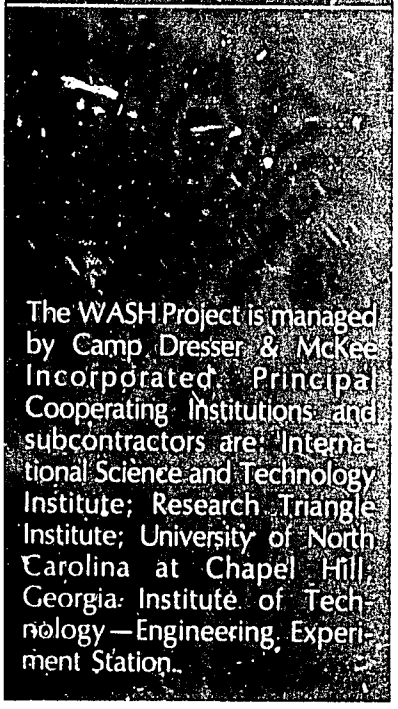

The WASH Project is managed by Camp Dresser & McKee Incorporated. Principal Cooperating Institutions and subcontractors are: International Science and Technology Institute; Research Triangle Institute; University of North Carolina at Chapel Hill; Georgia Institute of Technology—Engineering Experiment Station.

September 22, 1983

Mr. James Phippard
Mission Director
USAID Mission
Tunis, Tunisia

Attention: Ms. Dorothy Young

Dear Mr. Phippard:

On behalf of the WASH Project I am pleased to provide you with ten copies of a report on the manufacture, installation and use of the AID-type handpump in Tunisia.

This is the final report by Mr. Phillip W. Potts and is based on four trips to Tunisia by Georgia Tech personnel between November 1981 and September 1982.

This assistance is the result of a request by the Mission on October 5, 1981. The work was undertaken by the WASH Project on October 19, 1981 by means of Order of Technical Direction No. 63, authorized by the USAID Office of Health in Washington.

If you have any questions or comments regarding the findings or recommendations contained in this report we will be happy to discuss them.

Sincerely,

Dennis B. Warner, Ph.D., P.E.
Director
WASH Project

cc: Mr. Victor W. R. Wehman, Jr.
AID:S&T/H/WS

DBW:pwr

FIELD REPORT NO. 100

USAID HANDPUMP PROGRAM IN TUNISIA

Prepared for the USAID Mission to the Republic of Tunisia
Under Order of Technical Direction No. 63

Prepared by:

Phillip W. Potts

September 1983

Water and Sanitation for Health Project
Contract No. AID/DSPE-C-0080, Project No. 931-1176
is sponsored by the Office of Health, Bureau for Science and Technology
U.S. Agency for International Development
Washington, DC 20523

TABLE OF CONTENTS

Chapter		Page
1.	INTRODUCTION	1
2.	BACKGROUND	4
2.1	Feasibility Study	4
2.1.1	Foundries and Machine Shops	4
2.1.2	Plastics Manufacturers	5
2.1.3	Field Investigations	5
2.1.4	CARE Rural Water Supply Project	6
2.1.5	Genie Rural (Rural Engineering Section of the Ministry of Agriculture)	6
2.2	USAID/Tunisia-Georgia Tech Contract	6
2.2.1	Manufacture of AID Handpump	7
2.2.2	Use of PVC Pipe in Water Supply Program	10
2.2.3	Roboscreen and Robovalves	10
2.2.4	Site Development, Handpump Installation, and Handpump Performance Monitoring	12
2.2.5	AID Handpump Installation and Performance Monitoring	13
3.	ORDER OF TECHNICAL DIRECTION NUMBER 63	17
3.1	Pump Performance	17
3.2	ENIT	19
3.3	Areas of Responsibilities Under OTD 63	22
3.3.1	Genie Rural	23
3.3.2	USAID/Tunisia	23
3.3.3	Georgia Tech	23
3.3.4	Georgia Tech Coordinator (Tunisia)	24
3.3.5	Office of Health, Science and Technology Bureau, AID/Washington	24
3.3.6	Water and Sanitation for Health Project (WASH)	24
4.	PERTINENT SOCIAL FACTORS INFLUENCING THE USE OF HANDPUMPS FOR WATER SUPPLY PROGRAMS IN TUNISIA	28
5.	CONCLUSIONS AND RECOMMENDATIONS	31
5.1	Conclusions	31
5.1.1	Social Considerations	31
5.1.2	Technical Considerations	31
5.1.3	Institutional Considerations	31

5.2 Recommendations 32

5.2.1 Wells Program 32
5.2.2 Health Education 32
5.2.3 Technical Resources 32
5.2.4 PVC Drop Pipe Research 32
5.2.5 Institutional Resources 32
5.2.6 Studies of Successful Community Programs 33
5.2.7 Additional Engineering Assistance 33
5.2.8 General Assistance 33

APPENDICIES

A. Water and Sanitation for Health (WASH) Project Order of Technical Direction (OTD) Number 63 34

B. Feasibility of Locally Manufacturing AID Hand-Operated Water Pumps and Robo Devices in Tunisia 52

C. Technical Report on The Durability and Safety of Using PVC Pipe in Potable Water Distribution Systems 75

Chapter 1

INTRODUCTION

The AID handpump is a single-action, reciprocating, positive displacement pump designed in 1966 by Battelle-Columbus Laboratories for the U.S. Agency for International Development (AID). Specifications for the design included long life under severe operating conditions, easy maintenance using simple tools and unskilled labor, potential for manufacture in developing countries, and easy operation by women and children. The shallow-well (SW) version, with the piston and cylinder assembly incorporated into the above-ground pump stand, is suitable for wells where groundwater is located at depths of less than 26 feet (See Figure 1). For the deep-well (DW) version, the piston and cylinder are positioned below the water level allowing pump operation to depths in excess of 100 feet (See Figure 2). In 1976 AID contracted with Georgia Institute of Technology to carry out field testing activities in developing countries.

Because of the comprehensiveness of AID handpump programs, which include the local manufacture of pumps and spare parts and depend upon local technicians for installation and maintenance of the pumps and sometimes users for monitoring them, the programs have met with varying degrees of success around the world.

Experience around the world has shown that some initial failures were rooted in the lack of the capacity to produce pumps of acceptable quality. In still other cases the pumps were improperly installed and maintained despite painstaking efforts on the part of outside experts working with local officials and technicians, and in still other cases the pumps and/or their parts simply wore out from use and inadequate maintenance. The latter problems appear to be the most frequent because of the logistics required to maintain pumps once they are installed and the difficulty developing countries have in managing such projects. Despite such set-backs, however, there is encouraging evidence that some countries are developing the capability to implement and maintain handpump programs.

Under the Georgia Tech contract the AID handpump was manufactured and field tested in Nicaragua and Costa Rica. After recommended design changes, it was introduced in the Dominican Republic, Indonesia, the Philippines, Honduras, and Sri Lanka. A handpump program is currently in progress in Ecuador and Haiti, and what appears to be an unsuccessful program is currently being phased out in Tunisia.

Figure 1

AID HAND–OPERATED WATER PUMP
SHALLOW WELL

(For Wells less than 7-8 meters in depth)

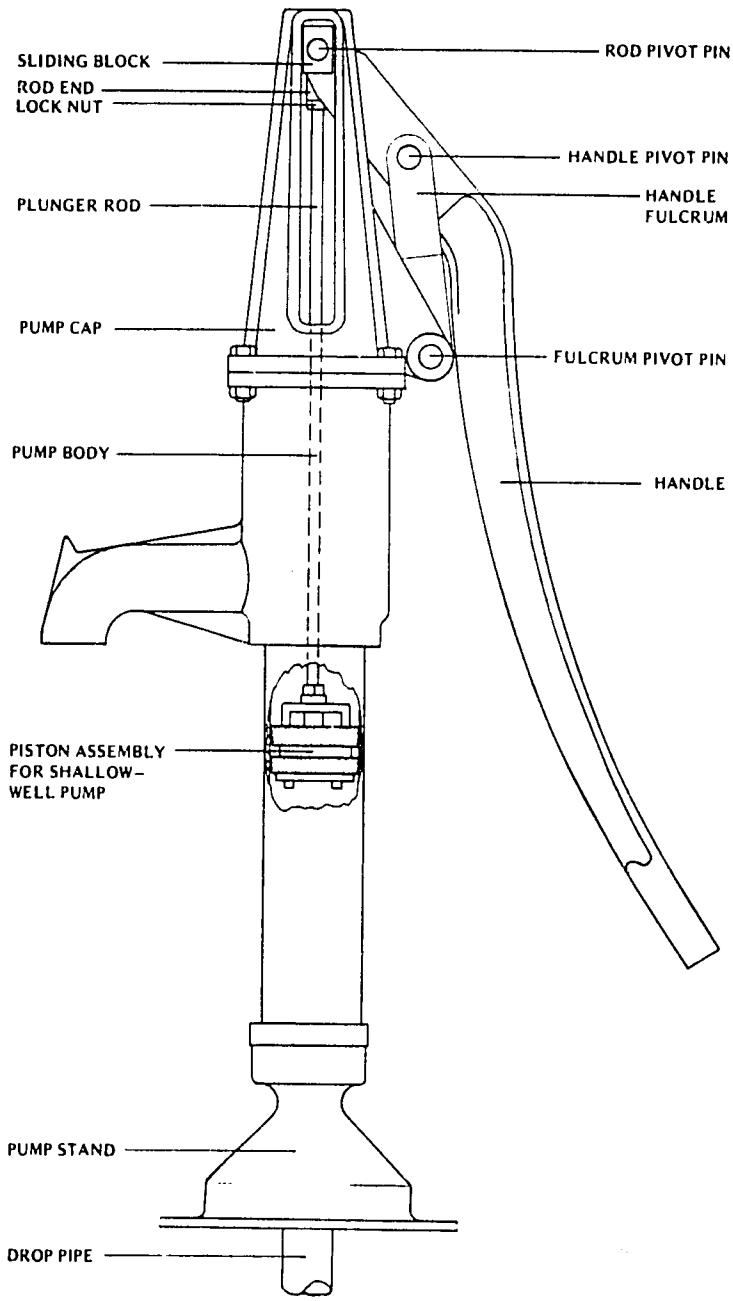

Figure 2

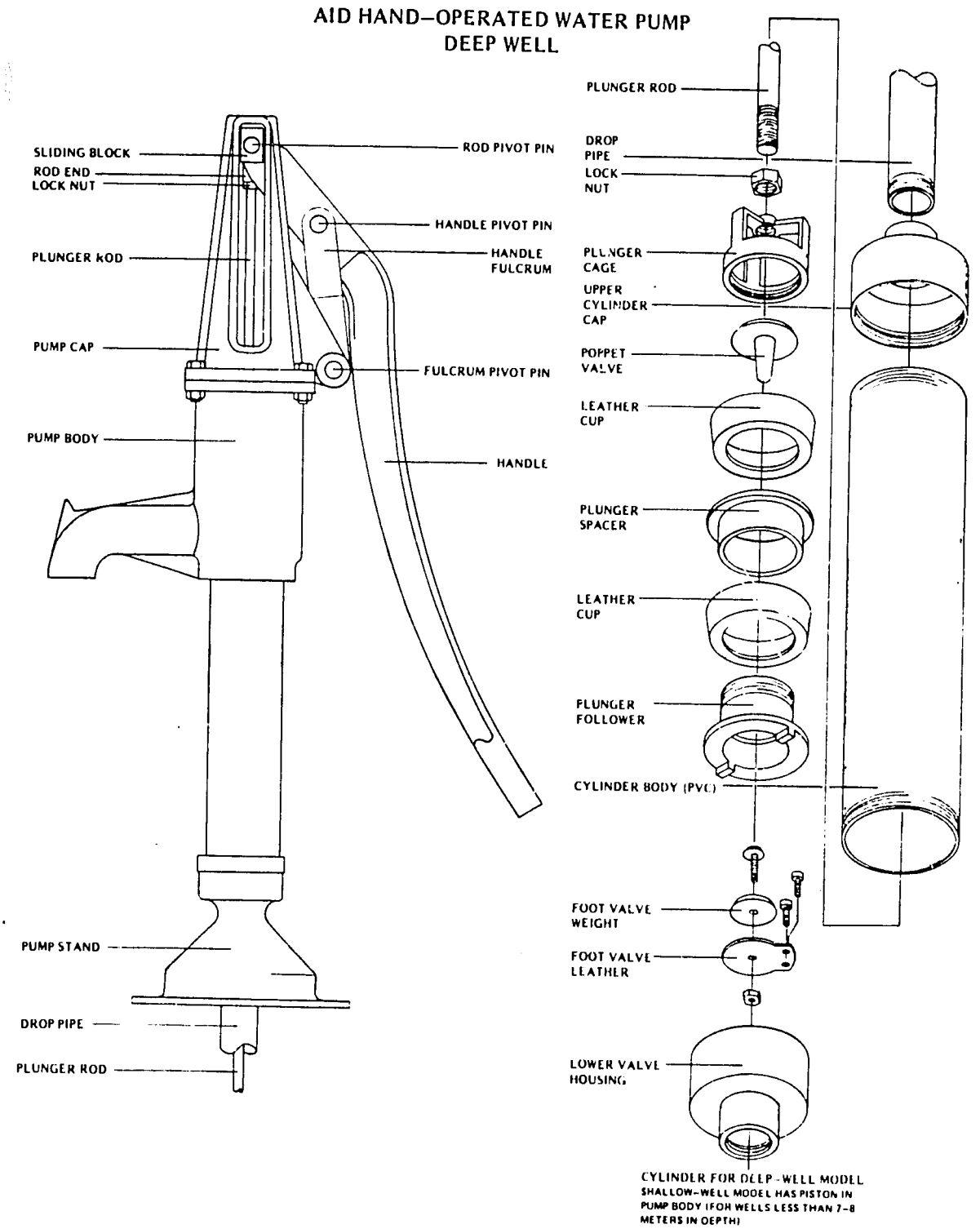
AID HAND–OPERATED WATER PUMP
DEEP WELL
SLIDING BLOCK
ROD END
LOCK NUT
PLUNGER ROD
PUMP CAP
PUMP BODY
PUMP STAND
DROP PIPE
PLUNGER ROD
ROD PIVOT PIN
HANDLE PIVOT PIN
HANDLE FULCRUM
FULCRUM PIVOT PIN
HANDLE
PLUNGER ROD
DROP PIPE
LOCK NUT
PLUNGER CAGE
UPPER CYLINDER CAP
POPPET VALVE
LEATHER CUP
PLUNGER SPACER
LEATHER CUP
PLUNGER FOLLOWER
CYLINDER BODY (PVC)
FOOT VALVE WEIGHT
FOOT VALVE LEATHER
LOWER VALVE HOUSING
CYLINDER FOR DEEP-WELL MODEL
SHALLOW-WELL MODEL HAS PISTON IN PUMP BODY (FOR WELLS LESS THAN 7-8 METERS IN DEPTH)

Chapter 2

BACKGROUND

The AID handpump program in Tunisia began in 1980 after a March (1980) cable from the USAID Mission in Tunis requested the following:

1. Sample plastic well screen for testing and monitoring on wells to be drilled by CARE.

2. Sample robovalves* for testing and monitoring by CARE on water systems where public faucets would be required.

3. Information on the feasibility of locally manufacturing robovalves in Tunisia.

4. A reassessment of a study done by F. Eugene McJunkin in 1976 on locally manufacturing AID handpumps.**

2.1 Feasibility Study

In April 1980, AID/Washington requested Georgia Tech assistance in Tunisia under an existing contract to discuss the USAID Mission's interest in the above four items and carry out an in-country investigation of the feasibility of locally manufacturing AID handpumps, roboscreen, robovalves and robometers. The investigation was carried out and showed that a very dispersed population traveled long distances to gather water of questionable quality. Handpumps, in general, seemed appropriate in such an environment because their per capita costs including installation were low when compared to deep, drilled wells with motorized pumping and storage facilities serving the same number of people. The robovalve and roboscreen also seemed appropriate for Tunisian rural water supply programs. However, it was concluded that it would be premature to introduce the robometer into the rural areas because there was no practical way to pipe water to the large, dispersed population.

2.1.1 Foundries and Machine Shops

Investigation showed further that Tunisian foundries, machine shops, plastics manufacturers, and retail hardware stores offered a wide variety of quality and prices to choose from and that there was an industrial base quite sufficient to handle the local manufacture of AID handpumps, robovalves and

*A "robovalve" is a device developed by Ron Sternberg and Bob Knight (thus its name) at the University of Maryland. It is a faucet which is activated by pushing a button which automatically shuts off when the button is let go. The roboscreen and robometer were developed by the same teams. The same team developed plastic well screening known as roboscreen and a plastic water meter called a robometer.

**Mr. McJunkin's report, "Rural Water Supply and Sanitation Programs Assisted by the United States Agency for International Development (USAID) in Tunisia," indicated that at least one foundry (SOFAMECA) was capable of casting and machining the AID handpump.

roboscreen (as well as many other devices for use in rural water supply programs). For instance, Fonderies Reunies was found to be a modern, integrated foundry and machine shop capable of producing a quality handpump. It was at that time supplying some 4,000 high-quality water meters a month to the Tunisian government and felt that it was ready to expand its existing product line to include other items related to water supply (such as hand-operated water pumps).

Fonderies Reunies had separate brass, bronze, aluminum and iron casting departments, each complete with centrifugal and automatic molding machines. The main casting area for iron was a network of conveyor rollers and belts for material handling which gave the impression of safety as well as efficiency. There also was a sand regeneration system which was a worthwhile example of the economic reuse of materials. The machine shop was very well equipped with 24 lathes ranging from nine-inch to eight-foot capacity and three milling machines ranging from a one-half inch capacity chuck to very large radial drills. There were laboratory facilities for analyzing and controlling the metallurgical content of castings, a rare luxury in developing countries. Quality control was stressed by a managerial team that showed considerable technical knowledge in foundry and machine shop operations. In other words, no foreseeable manufacturing problems were evident that would prevent Fonderies Reunies from producing a quality handpump. Because of this favorable impression of Founderie Reunies a formal quote was solicited from its management for manufacturing the AID handpump in small lots (fewer than 100 pumps per order) and they quoted $232 a pump.

Four other manufacturing establishments were visited including SOFAMECA, which Mr. McJunkin evaluated in 1976 and which was capable of casting and machining the AID handpump. However, a quote was not possible because the responsible person was absent from the plant during the visit by Georgia Tech personnel. Fonderies Schifano could cast the pump components, but the machining would have to be done elsewhere. Societe Industrielle du Nord was an assembly operation only, with no casting or machining facilities. Societe Chambi was a machining and assembly operation only, with no casting facilities.

2.1.2 Plastics Manufacturers

Three plastics manufacturers were visited for the purpose of possibly producing robovalves, roboscreen and robometers. Societe des Applications Plastique was found to be capable of producing rovobalves with its injection molding equipment and machining facilities. Inoplast could extrude and slot the roboscreen. Societe Commerciale et Industrielle des Produits en Plastique did not have adequate facilities for producing robo devices. None of the above had the resources for die or mold making within their respective plants, but all felt this would not be a problem as they usually got their dies and molds from Europe.

2.1.3 Field Investigations

In investigating the need for the above hardware (handpumps, robovalves, roboscreen and robometers), field trips into the rural areas of Tunisia left no doubt as to the serious lack of adequate water supplies. Rural citizens

walked or rode animals long distances (as much as 10-15 kilometers in many cases) to water their livestock and to gather water of questionable quality for domestic use. Where there was a source of water, the volume of water was often insufficient to meet the demand of its users and often water was so brackish that it was undesirable for drinking or cooking. Because of the inadequate supply of water, feuds were reported to have erupted over who should have priority over what water was available. Normal problems of water supply were also magnified by the dispersion of rural houses over large areas of land that disallowed economies of scale possible in a higher density environment.

2.1.4 CARE Rural Water Supply Project

One of the more significant rural water and sanitation activities in Tunisia was the CARE project in which some 600 wells and springs had been developed or renovated over the previous 10 years. Several kinds of handpumps had been used (Dempster, Godwin, and a CARE design with a Clayton Mark cylinder). Unfortunately, from visits into rural areas of Tunisia and from discussions with CARE and USAID/Tunisia representatives, it was estimated that perhaps 70 to 80 percent of these pumps were inoperable because they were poorly maintained and repaired by the Ministry of Public Health (the responsible agency) and because they could not withstand rugged Tunisian conditions.

2.1.5 Genie Rural (Rural Engineering Section of the Ministry of Agriculture)

Because handpumps and robo devices have to be installed, maintained and repaired, the feasibility study included the investigation of a possible infrastructure within the government to handle these activities. The Ministry of Agriculture was composed of several departments charged with developing badly needed water sources. Of particular relevance was Genie Rural (Rural Engineering) which had a national center and offices in each governorate of Tunisia. Genie Rural had major responsibility for proposing, constructing, contracting and maintaining rural potable water systems in areas with fewer than 500 people. Even though Genie Rural had previously concentrated only on community standpost systems it was planning to install hand-operated pumps. Thus, it seemed logical that Genie Rural should be the responsible government agency involved in an AID handpump program if one should develop.

2.2 USAID/Tunisia-Georgia Tech Contract

In August 1980, as a result of the feasibility study, USAID/Tunisia and the Tunisian government requested technical assistance from Georgia Tech for manufacturing AID handpumps, roboscreen and robovalves. A contract (No. USAID/Tunisia 664-725) was signed between the Mission and Georgia Tech which called for technical assistance in the manufacturing and field testing of the devices in Tunisia. More specifically, Georgia Tech was to:

- Provide technical assistance to USAID/Tunisia, the Tunisian government and Private Voluntary Organizations (PVOs) implementing rural water supply programs.

- Oversee production of 40 AID handpumps, 200 robovalves and 500 feet of roboscreen.

- Provide working drawings, prototypes, and technical assistance in proper production techniques and quality control.

- Inspect, test, and accept the AID handpumps, robovalves and roboscreen.

- Develop at least 10 sanitary wells and upper structures; install AID handpumps and roboscreen; disinfect well waters; and determine chlorine residual.

- Monitor and evaluate performance of the AID handpumps, robovalves and roboscreen.

- Provide feedback to manufacturer for quality control.

2.2.1 Manufacture of AID Handpump

In September 1980, an order was placed with Fonderies Reunies for 40 AID handpumps at a unit cost of $232. Fonderies Reunies was selected over SOFAMECA because of earlier favorable impressions of Fonderies Reunies, what appeared to be a lack of interest by SOFAMECA, and an impression by project personnel that the large size of SOFAMECA would prevent its management from taking a personal interest in the project. The traditional AID handpump had been manufactured in other countries (Nicaragua, Costa Rica, Dominican Republic, Indonesia and Sri Lanka) with a 2.75-3.00-inch inside diameter cylinder connected to the pump by a 1.25-inch galvanized iron drop pipe during installation in the field. In Tunisia, this approach was not thought to be practical from a maintenance standpoint because of the difficulty in removing the piston assembly for periodic changing of leather cups that normally requires two to three hours. Consequently, the AID handpump manufactured in Tunisia (see Figure 3) had a 2.1-inch (53 mm) inside diameter PVC drop pipe that also served as a cylinder. This allowed leather cups to be changed by removing the pump cap and pulling the piston assembly up through the drop pipe and pump, changing the leather cups, and replacing the piston assembly back through the pump body and into the drop pipe. This approach enabled maintenance and repair teams to change leather cups in less than 30 minutes. Installation of the pump itself could be carried out in less than one hour with a two-person crew.

In January 1981, Fonderies Reunies presented a production prototype of the AID handpump to USAID/Tunisia and Georgia Tech personnel for approval before beginning regular production. The prototype was inspected for conformance to specifications and then tested over a drum of water for leaks, pumping ability, and smoothness of moving parts. Other than minor manufacturing deficiencies the prototype was of acceptable quality. Approval was then given to proceed with the production of the 40 pumps.

Between January and May 1981, Fonderies Reunies finished the 40 pumps. During the manufacturing process, more than the normal problems of producing such an item for the first time were encountered. The piston assembly dimensions were slightly large for easy access through the pump and drop pipe assembly (this

Figure 3

AID HAND–OPERATED WATER PUMP, DROP PIPE AND PISTON ASSEMBLY MANUFACTURED IN TUNISIA

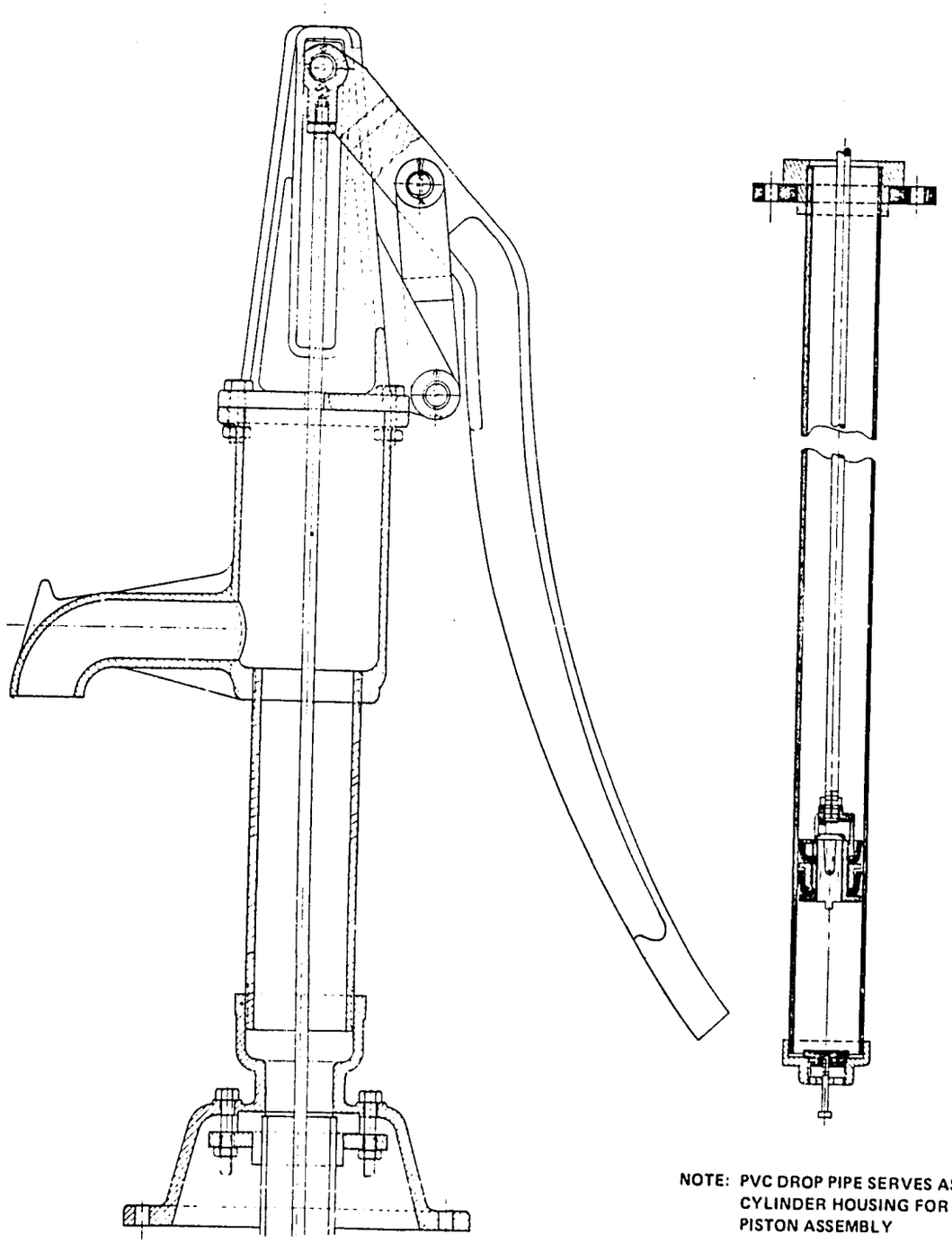

NOTE: PVC DROP PIPE SERVES AS CYLINDER HOUSING FOR PISTON ASSEMBLY

was corrected by the foundry machining down the outside diameter dimensions of the piston assembly components and by reducing the size, or outside diameter, of the leather cups from 55 mm to 50 mm). Some pumps had a loose connection where the pump body screws into the pump stand which had to be better tightened and sealed. One pump had a small pinhole in the pump stand casting. Pump caps had bolt holes drilled too close to the piston rod guide section of the pump cap which made securing of the cap to the pump body difficult. The pumps were painted with a red paint which did not dry even after six or seven days (Fonderies Reunies reported that a drying agent was left out of the paint by its plant personnel). Lastly, foot valves leaked at an unacceptable rate, a matter that was eventually resolved by using foot valves commercially available in the United States. In addition, other pressing and unusual problems arose, the most critical being the shortage in-country of various materials and supplies such as leather cups, PVC pipe with a smooth inside surface, PVC pipe couplings and PVC cement. A source of supply was eventually found for these items, but they remained in short supply throughout the project.

Another unusual problem experienced in Tunisia was some resistance by Fonderies Reunies to the close supervision of project personnel necessary to insure the sort of quality required in a technology transfer effort such as that of the AID handpump. Fonderies Reunies felt that its management had the responsibility for manufacturing a product (the handpump) according to a set of specifications and outside assistance was unnecessary and unwanted.* Perhaps a smaller foundry might possibly have been a better choice for manufacturing the AID handpump even though the machining and assembly would have created logistical and coordination problems. Also, the individual or organization responsible for coordinating the casting with the machining and assembly operations would have had to be capable of acceptance testing of the castings before turning them over to the machine shop, as well as being responsible for acceptance of the finished handpump.

Other problems encountered during the manufacturing process were (1) delays in manufacturing because the AID handpumps were given a low priority by Fonderies Reunies and (2) national labor disputes that led to strikes which affected Fonderies Reunies.

* This attitude had not previously been encountered in other countries where AID handpump manufacturers have welcomed new technology and assistance in its manufacture to the point that project personnel have continuously worked for weeks at a time side by side with plant personnel to insure that quality is maintained.

2.2.2 Use of PVC Pipe in Water Supply Programs

The use of PVC pipe in water supply programs has many advantages over metal pipe. PVC pipe is light in weight and easy to work with. However, in Tunisia, PVC pipe has only recently been introduced on a large scale. As a result, questions came up during the handpump project regarding the health effects of using Tunisian-manufactured PVC pipe made with lead stabilizers for the AID pump's cylinder and drop pipe. Project personnel conducted chemical analyses for traces of lead in the water that had passed through the Tunisian-manufactured PVC pipe. The results which showed that the amount of lead leached into the water was very small (0.2 parts per million) and was given off in the first flush in less than five minutes. Samples removed during the subsequent 24 hours of flushing showed no trace of lead. (The report on these chemical tests is shown in Appendix C.)

2.2.3 Roboscreen and Robovalves

Prior to the initiation of Contract No. USAID/Tunisia 664-725, AID/Washington provided USAID/Tunisia with samples of robovalves and roboscreen as demonstration units to be installed in the field. Unfortunately, neither of these devices generated much interest within the Tunisian Government. Regie des Sondage Hydrauliques, the government's water drilling department under the Ministry of Agriculture, reported on several occasions during discussions with USAID Mission and Georgia Tech project personnel that the government had experienced problems some ten years in the past with plastic well casings and was reluctant to try them or plastic well screen again. Thus, it appeared that there was no market for the roboscreen in Tunisia.

A public hydrant robovalve model (see Figure 4) was installed by CARE at a capped spring in the Siliana governorate, but it was not well received by the users. The major complaint about the robovalve was its major feature, that of being self-closing. Because rural Tunisians use containers holding as much as 10-15 gallons of water, they found it very time consuming to hold the button/float valve in a downward position while the container was being filled and resorted to weighting the button down with a rock. After some time the rocks eventually wore the button off.

A public hydrant model also was installed by Genie Rural engineers at a capped spring near Bizerte. The spout on this valve broke off soon after installation which rendered the valve useless.

In light of the above experiences, it was decided not to initiate the manufacture of the roboscreen and robovalve in Tunisia. There was no market for the roboscreen, and the robovalve, being self-closing, appeared to be culturally unacceptable. Also, it was determined that the molds alone for the robovalve would cost approximately $13,000. This was considered a prohibitively high figure especially in the absence of a market that would allow the amortization of this cost over thousands of units of production.

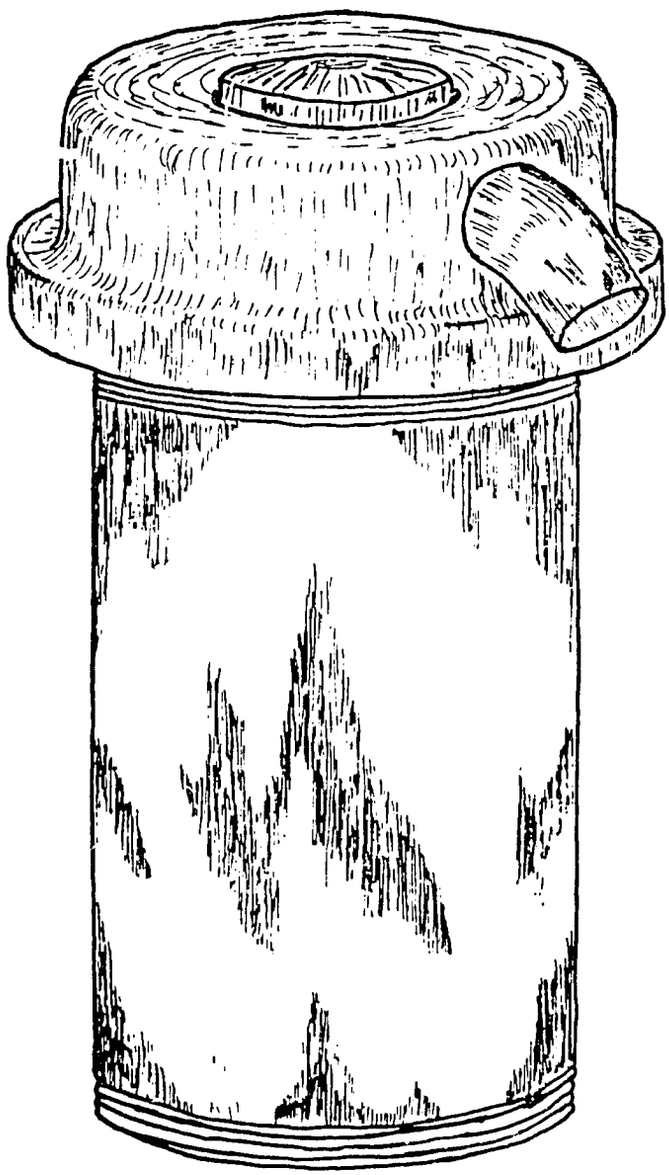

Figure 4 PUBLIC HYDRANT ROBOVALVE

2.2.4 Site Development, Handpump Installation, and Handpump Performance Monitoring

In order to test the overall durability and performance of the locally manufactured AID handpumps in the field, 12 sites (five in the Siliana governorate, five in the Kasserine governorate, one on the outskirts of Tunis, and one near Bizerte) were selected for handpump installation. The sites were selected on the basis of three criteria:

- Large user population
- Year-round water availability
- Easy access by paved roads.

Well depths ranged from 5.6 meters (18.4 feet) to 31.8 meters (104 feet), thus enabling the pumps to be tested at a variety of depths.

The five sites in Siliana were selected and developed by the CARE/Maktar representative. The sites had previously been constructed for CARE pumps and had been capped and provided with good drainage. Thus, only slight modifications were necessary for adaptation for the AID pumps. This was done by removing CARE pumps and pouring a new pedestal for the anchor bolts which were welded to four-millimeter-thick circular steel plates that were imbedded in the reinforced concrete pedestal. (Although at the time Georgia Tech project personnel expressed doubts that such a robust handpump mounting was necessary, subsequent experiences proved the wisdom of CARE's caution.) Basins were added later to improve the channelling of drainage to animal troughs.

The five sites in Kasserine were jointly selected by Genie Rural and Georgia Tech personnel. One site (No. 10), unfortunately, had to be dropped because the local people objected to having their well covered and having a handpump installed on it. The remaining four sites were developed by Genie Rural in the same manner as in Siliana by CARE/Maktar.

The site on the outskirts of Tunis was an open well that was prepared for the AID handpump installation by Genie Rural representatives from Tunis. The site near Bizerte was a well that had been equipped with a handpump in the past and was rehabilitated for the AID handpump by Genie Rural representatives from Bizerte.

The following is a listing of the sites selected and developed for AID handpump installation:*

---

* Note: Site No. 10 (Bouhaya) was dropped because the local people objected to covering the well and installing a pump on it.

Site Number	Site Name	Well Depth
1 (two pumps)	Margelala/Maktar	6.0 meters (19.7 feet)
2	L'Houichette/Maktar	6.0 meters (19.7 feet)
3	Zouza/Maktar	12.0 meters (39.4 feet)
4 (two pumps)	Bir Ain Halouf/Maktar	5.6 meters (18.4 feet)
5	Kizran/Maktar	14.0 meters (45.9 feet)
6	Belhijette/Kasserine	19.1 meters (62.6 feet)
7	Qued Marthoum/Kasserine	14.4 meters (47.2 feet)
8 (two pumps)	Ketib/Kasserine	10.6 meters (34.8 feet)
9	Mlaz/Kasserine	6.2 meters (20.3 feet)
11	Bir Attar/Tunis	13.0 meters (42.6 feet)
12	Ain Ghel/Bizerte	31.8 meters (104.3 feet)

2.2.5 AID Handpump Installation and Performance Monitoring

Between April 23, 1981 and September 28, 1981, 14 AID handpumps were installed at the above sites. Between May and August several major problem areas began to show themselves at the five Maktar sites. Pumps had not yet been installed in the areas of Kasserine, Tunis and Bizerte:

1. Of the seven pumps installed at the Maktar sites, five had cast iron bases break, a situation never experienced in other countries where the AID handpump has been locally manufactured. After an extensive investigation to find out whether the breakage was due to manufacturing defects, a design problem, or deliberate intervention by the local people, project personnel concluded that neither manufacturing defects nor design problems could be the cause. On several occasions prior to the AID project, pumps that CARE had installed has also been deliberately broken a short time after they were installed. To resolve the problem, replacement bases were manufactured with four fins added for extra strength. The modified bases were installed on the broken pumps in the field. No breakage problems occurred with the modified fortified base.

2. The AID handpump has normally been manufactured with a leather flapper-type foot valve. The advantage of this foot valve is that it is inexpensive (less then $.50). The disadvantage is that the leather quickly wears out and requires frequent replacement. Because of a desire by the USAID Mission, CARE, and the Tunisian Government for the Tunisian AID handpump to be as maintenance-free as possible it was decided by project personnel to design a brass foot valve that would not wear out so frequently (see Figure 3). Even though the brass foot valve was cast and machined property, its metal-to-metal surface did not provide an adequate seal between its poppet valve and its metal seat. As a result, its performance in the field was less than satisfactory.

   During the months of May and early June (1981) a plastic foot valve was developed that was similar in configuration to the brass foot valve and

used concepts from the robovalve. Plastic foot valves were fabricated and laboratory-tested by a Georgia Tech consultant, and were then sent to Tunisia for field installation and evaluation. These foot valves performed much better than the metal foot valves but tended to leak occasionally when their plastic poppet valve did not seat properly. (In September of 1981 Simmons foot valves were brought to Tunisia from the United States and later installed in the field to correct this problem.)

3. AID handpump specifications require that fulcrum pins be hardened to 40-45 Rockwell C hardness for pivoting inside bushings hardened to 60-65 Rockwell C. The idea here is that the pins which are easier to change than the bushings should be softer so that they will wear out first. Soon after the first AID handpumps were installed in the Maktar area it became obvious that both the pins and bushings were wearing at an unusually high rate, most likely because they were not hardened to specifications. In discussing this problem with Fonderies Reunies it was found that the steel pins and bushings had a hardness of 25 Rockwell C and was not treated to increase its hardness to specifications before assembly into the pump. Fonderies Reunies refused to replace the softer pins and bushings with new ones that met specifications because (1) Fonderies Reunies did not have in-house facilities for hardening metal and (2) according to the foundry management, Georgia Tech project personnel had already accepted the pumps, thus relieving Fonderies Reunies of any further responsibility. Fonderies Reunies, however, agreed that it would purchase additional raw stock for pins and bushings, fabricate the pins and bushings, and sell them as spare parts if project personnel could get them hardened elsewhere.

   Project personnel contacted the Ecole Nationale d'Ingenieurs de Tunis (ENIT), an engineering university in Tunis, to see if its industrial or mechanical engineering departments could harden the pins and bushings. As it turned out, ENIT was very cooperative, enthusiastic about working on the handpump project, and had more than adequate facilities for hardening the pins and bushings. The enthusiasm was based on ENIT's recognition that, although its students had been trained in hardening of metals, they needed practical work for experience. Adherence to specifications would be assured by ENIT staff, several of which had received their Ph.D.'s in the United States. Later discussions deal with the performance of the pins and bushings made to specifications, but which continued to wear much too rapidly.

4. As noted in Section 2.1.2 of this report, the AID handpump manufactured in Tunisia had a 2.1-inch inside diameter PVC drop pipe that also served as a cylinder. Mathematical calculations, as well as brief laboratory tests, indicated that PVC pipe used in this manner would withstand the weight of the water in the drop pipe and the forces generated by the upward and downward motion of the pump's piston. However, in the field, the PVC drop pipe/cylinder arrangement proved not to be dependable and was prone to separate. The separation usually occurred where a commercially-available coupling was used and not at joints where bell-shaped PVC pipes were bonded together. It is suspected that the couplings were made of some plastic compound other than PVC which did not allow a proper weld. Despite the use of couplings produced by different manufacturers

and different PVC cements, the pipe separation problem was never completely solved. This was especially true in Maktar where the wells were shallow and the drop pipe hung loose from the pump base. In the other areas of Tunisia where AID handpumps were later installed the drop pipe was clamped to the sides of the wells because of deeper depths. This took the load off the drop pipe, and separation was minimal.

5. As noticed during the manufacturing process, pumps became loose at the connection where the pump body screws into the pump stand. This was due to poor machining of the threads both on the pump base and on the three-inch galvanized-iron pipe that makes up a major portion of the pump body. Tightening of the pump body onto the pump base and using pipe joint compound helped somewhat, but the pumps tended to become loose again with use.

6. While replacing the first two pumps that had broken bases at site No. 1 (Margelala/Maktar), the CARE/Maktar repair team and Georgia Tech project personnel met with violent opposition to the re-installation of the pumps from nearby residents. The residents strongly insisted that if the broken pumps were replaced they should have their handles tied down with rope so that they could not be used and, at the same time, the access hatch for cleaning the well should be left unlocked so that buckets could be lowered for collecting water. A compromise was reached whereby only one pump would be left at the site instead of the two initially installed and the hatch would be left unlocked. Somewhat milder opposition was encountered at site No. 5 (Khizran/Maktar). In both of these instances the reason given for the opposition to the pumps was that the residents preferred open wells.

Georgia Tech's field activities in Tunisia under contract USAID/Tunisia 664-725 were concluded between September 2 and October 2, 1981. All pumps had been installed (even though minor masonry work remained to be done by Genie Rural/Kasserine), broken bases had been replaced with those modified to include the four fins for extra strength, and United States-manufactured foot valves had been installed at most field installations. However, questions still remained as to the long-range effects of using the modified base, the wearing of the pins and bushing, the viability of using PVC drop pipe, the loosening of the pump body from the pump base, and the opposition to covering open wells and installing handpumps on them. In further regard to the latter issue, users of the pumps on occasion stated that drawing water with the pump was easier than by a rope and bucket but was not as convenient. Many users used the rope and bucket even when the pumps were idle. Users stated that the open wells were better than sealed wells with handpumps because many people could use an open well simultaneously, while a pump could be used by only one person at a time.

The issue of open versus closed wells apparently had not been adequately addressed when it was first decided to cover the wells and install handpumps. One of the alternatives to this water-supply improvement would have been to spend project funds building new open wells closer to population clusters rather than spending the money to cover existing wells and installing handpumps on them. The decision as to which course of action to take is a complex one involving technical, economic, social and political considerations. Perhaps the only feasible alternative was the one selected and

implemented, but it is now clear that opposition to the project on the part of the local people made even that alternative very difficult to implement successfully. In fact, as will be seen later in this report, the attempt had to be abandoned in the end.

One aspect of the decision, however, concerns the types of health problems which the water-supply improvements were intended to relieve. It could be that the principal water-related health problems encountered in rural Tunisia are those due to inadequate quantity rather than inadequate quality of water. Considering the long distances that people have to carry water there, it stands to reason that people transport only enough water to satisfy needs they perceive as being essential. Thus, bathing and other uses of water which may not be seen as important as drinking, cooking, irrigation and animal watering, but which are important to prevent disease, may not receive adequate attention by the local people. Experience has shown that this situation is probably best handled by making water-gathering work convenient and implementing health education programs so that people will be inclined to use more water. This seems to be more beneficial than attempts to improve water quality by protecting existing but inconvenient sources of supply. Of course, the best solution is to improve both convenience (quantity) and quality, but, unfortunately, scarce resources often necessitate choosing between the two. This issue will be discussed again briefly later in this report.

In order to deal with the problems not only of local opposition but also of inadequate monitoring and maintenance of the pumps and in order to satisfy all those involved in the project that all reasonable steps had been taken to try to make the selected alternative work, two AID engineers from Washington developed a detailed scope of work in Tunisia in September 1981 for monitoring and monitoring the pumps. The scope of work and its implementation under WASH Order of Technical Direction (OTD) No. 63 are discussed in the next chapter.

Chapter 3

ORDER OF TECHNICAL DIRECTION NUMBER 63

During the final visit to Tunisia by Georgia Tech field personnel in September 1981, Mr. Victor Wehman (Science and Technology Bureau, AID/Washington) and Mr. Joseph Haratani (Near East Bureau, AID/Washington) travelled to Tunisia to observe problems encountered with AID handpumps installed in the field. In discussions between USAID/Tunisia officials, Mr. Wehman, Mr. Haratani and Georgia Tech staff, it was decided that the AID handpump project should continue. The problems appeared solvable, and the Tunisian government still had a great deal of interest in using the AID handpump. As a result, OTD 63 was issued (see Appendix A) on October 19, 1981 by AID/Washington to the WASH Project, a centrally-funded project managed by the AID Office of Health and operated for AID by Camp Dresser and McKee, Inc. (CDM). Georgia Tech, CDM's subcontractor under the WASH Contract, was then authorized to carry out a program to include:

- Assumption of responsibility for existing spare handpumps, handpumps installed at testing sites, spare parts, existing stores of drop pipe, and plunger rod and miscellaneous equipment located in Tunis, Bizerte, Maktar and Kasserine governorates.

- Work with foundry, Genie Rural, CARE, USAID/Tunisia, ENIT and other suppliers and interested parties to: (1) improve quality control of pumps manufactured at foundry; (2) ensure pump designs are properly adapted to conditions in rural Tunisia; (3) plan, coordinate, manage and implement integrated field installation, re-installation, repair, monitoring and training program for a period of 9-12 months.

A work plan (see attachment to Appendix A) was developed by Mr. Wehman, Mr. Haratani, USAID/Tunisia and Georgia Tech staff while Mr. Wehman and Mr. Haratani were in Tunisia.

The first of four trips to Tunisia by Georgia Tech staff under OTD 63 was from November 2 to December 17, 1981. The specific purposes of this trip were to inspect all pumps installed in the field, to make handpump repairs if necessary, to follow up on the production of pins and bushings hardened to specifications, and to insure that an effective monitoring system was in place for the future.

3.1 Pump Performance

The following table lists the status of the pumps as observed during the first field inspection trip:

Site Number	Pump Functioning	Comments
1	No	Plastic foot valve replaced with Simmons foot valve from the U.S.
2	Yes	Pump reoriented because body loosened from base due to poor threading.
3	No	Plastic foot valve replaced with Simmons foot valve from the U.S.
4 A	No	Installed new pump of original design to replace pump with broken base.
4 B	Yes	None
5	Yes	None
6	Yes	Loose anchor bolts due to poor concrete mix.
7	Yes	Pump body leaks where screwed into the pump base due to poor threading.
8 A	Yes	None
8 B	Yes	No anchor bolts holding pump to slab--advised Genie Rural/Kasserine to remedy situation.
9	Yes	Pump body leaks where screwed into the base due to poor threading.
11	Yes	None
12	No	Pump with broken cap and handle fulcrum. Replaced with new pump.

Chapter 2 addressed the problems of leaking foot valves (which was solved by using the Simmons foot valve), the loosening of the pump body from the pump base due to poor threading, and the breaking of the original bases (which was solved by fortifying the base with reinforcement fins). The loosening of anchor bolts due to poor concrete work was observed during all of the inspection trips for OTD 63 in the Kasserine area.

The problems with the foot valves reflected poor design. The loosening of the pump body from the pump base reflected poor machining of the threads. In order to find out whether it was possible for people to break the cast iron pump base, project personnel tried several times, along with several able-bodied people to pull the pump over by breaking the base, but they could not do it. Residents near site 4A (Bir Ain Halouf/Maktar), where a base was broken, said that a boy had tied a rope to the pump and pulled the pump over with a donkey. They did not explain why he did this. Residents near site 12 (Ain Ghel/Bizerte), where the cap and fulcrum were broken said that the pump had been

working until somebody removed it from the well. Why the pump was removed and who removed it could not be determined.

Pins and bushings were fabricated by Fonderies Reunies and then hardened to specifications by ENIT. Attempts to extract the old bushings and insert the new ones became impractical because of varying hole dimensions. It appeared that when Fonderies Reunies originally inserted the softer bushings into the bushing holes, which were sometimes slightly undersized, the softer bushings yielded their shape and could, therefore, be press fit. However, in replacing the old bushings with harder ones, neither the hard bushing nor the hard cast iron yielded. As a result, the pump component often broke. Finally, Fonderies Reunies was contracted to cast extra cap assemblies which ENIT properly machined and assembled with the hardened pins and bushings. These cap assemblies then replaced those in the field that had the softer pins and bushings. Surprisingly, the hardened pins and bushings continued to wear out much too rapidly (within several months). It was concluded that violent sand storms prevalent in Tunisia, especially in the Kasserine area, caused grit to become lodged between the pins and bushings, wearing them out prematurely.

3.2 ENIT

Because of the impressive work done by ENIT as described above and because CARE was busy with its own projects, negotiations were entered into and concluded December 10, 1981 between Georgia Tech and ENIT for ENIT to monitor, maintain, and repair the AID handpumps installed in the field through the end of November of 1982. The monitoring was to be done twice a month until all head (cap) assemblies being prepared by ENIT were installed in the field and then once a month thereafter.

The second of four trips to Tunisia by Georgia Tech under OTD 63 was from February 5 to 20, 1982. The purposes of this trip were to collect data being gathered by ENIT on the operation of the 13 handpumps installed in the field and to address any problems in either the monitoring or the operation and maintenance of the pumps.

The following was the status of the pumps approximately two months after ENIT became involved in the field work:

Site Number	Pump Functioning	Comments
1	No	Installed pump with original designed base to replace pump with broken base.
2	Yes	None
3	Yes	None
4 A	Yes	None
4 B	Yes	None

Site Number	Pump Functioning	Comments
5	Yes	Replaced broken handle fulcrum
6	Yes	Anchor bolts loose in concrete
7	No	Pump removed from base to recast concrete base
8 A	Yes	None
8 B	Yes	None
9	Yes	None
11	Yes	None
12	Yes	None

On the basis of the field inspection, it was concluded that ENIT was working effectively, spending most of its time during the previous two months machining, assembling and installing the cap assemblies with the hardened pins and bushings. ENIT had also replaced a handle fulcrum at site 1, replaced a handle fulcrum at site 2, reconnected the PVC drop pipe at site 8B and installed a pump at site 9 with a fortified base to replace a pump of the original design which had a broken base.

The third trip to Tunisia (April 22 to May 16, 1982) showed a continuing decrease in the number of pump failures due to ENIT's presence as well as the success of the fortified base and the use of the Simmons foot valve. During this visit only one pump (site 5) was found not working in the Maktar area. The rod end was missing and the plunger rod had fallen down into the drop pipe. One pump in the Kasserine area also was found not working (site 6). ENIT had removed it to reset anchor bolts in the well's upper structure. Both pumps were made operational again within several days of the inspection. It should be mentioned that ENIT was aware that the pump at site 5 needed repairs, but bad weather had made roads to the site impassable during the previous weeks. Other than these two sites, all pumps were working well. ENIT's maintenance records, however, did show that even the hardened pins and bushings continued to wear.

Georgia Tech made the fourth and final trip to Tunisia during the latter part of August 1982. The purpose of this visit was to check on the long term effectiveness of ENIT's monitoring activities since ENIT had been closed during the month of August and the last inspection had been in early July. The following is the status of the pumps observed in the field.

Site Number	Pump Functioning	Comments
1	No	Pump broken at base (original design) and pump missing.
2	No	Pump cap missing (see Figure 5).

Site Number	Pump Functioning	Comments
3	No	Handle gone from pump.
4A	No	It appeared that the plunger rod on piston assembly was disconnected.
4B	No	Pump broken at base (original design)(see Figure 6).
5	Yes	None
6	Yes	Pedestal that pump sits on broken up badly (see Figure 7).
7	No	Upper portion of pump broken off from 3" galvanized-iron pump body (see Figure 8).
8A	No	Pump broken at base (original design).
8B	No	Fulcrum pin missing, sliding block missing, rod end disconnected from plunger rod.
9	No	Pump broken at base (original design)(see Figure 9).

The pedestal at site 6 appeared to have been broken up with a sledgehammer. The pump at site 7 appeared to have been deliberately broken, as breaking of the pump in the threaded area of the galvanized iron pipe would have taken a tremendous effort. Thus, the AID handpumps seemed to have suffered the same fate as those installed by CARE. CARE representatives reported only days before the above inspection that they had just abandoned a site after five handpumps at that site had apparently been deliberately broken. Springs capped by CARE also had the access hatches repeatedly removed to allow access with a rope and bucket.

It was obvious that the local people were not going to accept the pumps and the covering of their wells. As long as ENIT was able to conduct routine monitoring and maintenance, however, the pumps could be kept in reasonably good operating condition despite the efforts of the local people to remove them. This last inspection trip showed clearly, though, that once ENIT's involvement in the project ended (which was scheduled for October 1982), there would be little hope that the pumps would be kept operating.

In addition to the problem of non-acceptance of the pumps, there was also a recurring problem of the PVC drop pipe separating from the pump base. This was

a design problem which could not have been overcome without extensive research and laboratory testing.*

In view of this situation, a decision was made on August 31, 1982, during a telephone conversation between AID/Washington, WASH, USAID/Tunisia, and Georgia Tech to remove all test pumps from the field. The conclusion was reached that the AID handpump was not appropriate for Tunisia. It is doubtful that any handpump will be until the users feel that covered wells and handpumps are an improvement over the rope and bucket and open well.

It is interesting to note that one of the Tunisian-made AID handpumps has been tested during the past year at Georgia Tech and has had three failures, all due to PVC drop pipe separation. The pins and bushings have shown no significant wear and no pump component has broken. The pump has been operated through 8.85 million cycles, or 3,482 hours of running day and night, seven days a week.

The technical "hardware" problems described above, coupled with the social factors influencing the use of handpumps for water supply programs in Tunisia, seem to confirm the finding that is becoming increasingly obvious through the experience of more and more technology transfer programs that technology cannot always be designed to accommodate all of the social factors that might influence its performance. Given that CARE and AID handpumps have been deliberately broken or removed over the last 10 years, rural Tunisians walk long distances to gather water for domestic use, the Tunisian government has limited funds and a limited infrastructure for maintenance and repair and the most pressing water-related health problems are those influenced by the quantity rather than the quality of the water used, it now appears that future water supply programs should emphasize increasing the number of open wells rather than sealed wells with handpumps. In other words, the emphasis should be on water quantity rather than water quality and on making it more convenient to obtain water. It is very important to note, however, that open wells require proper preparation, inspection, maintenance and disinfection.

3.3 Areas of Responsibilities Under OTD 63

As part of OTD 63, areas of responsibility were designated by AID/Washington, USAID/Tunisia, and Georgia Tech representatives for the various parties involved in the AID handpump program. The following sections discuss how these responsibilities were met.

---

* The pumps also had machining deficiencies; but these deficiencies probably would not have prevented the pump from working well in other countries where cultural conditions are different. Pins and bushings that have been manufactured according to specifications in other countries where the AID handpump has been introduced have not worn out as rapidly as those in Tunisia.

3.3.1 Genie Rural

Genie Rural headquarters in Tunis was especially cooperative and instrumental in getting the AID handpump program initiated in Tunisia. For the monitoring of pump performance in the field, Genie Rural/Tunis also was very helpful in establishing governorate contacts for project personnel to work with.

Genie Rural/Bizerte cooperated with project personnel and assisted them whenever requested. However, Genie Rural/Bizerte had responsibility for only one site.

Genie Rural/Kasserine was very helpful in the early stages of getting the pumps installed in the field. Potential sites for handpump installation were identified for project personnel. Genie Rural/Kasserine developed the selected well sites for handpump installation and absorbed the cost of the well development. During most handpump installations it had a representative present. However, during the monitoring activities its absence was obvious even though monitoring personnel from ENIT always made a point of inviting the representative along on site visits.

Genie Rural in the Siliana governorate did not participate in any phase of the handpump program involving the sites located at Maktar even though numerous attempts were made to get it involved.

In summary, the responsibilities assigned to Genie Rural were only partially fulfilled. The principal reason for this appears to have been lack of resources. Genie Rural would have needed more trained staff, vehicles in good repair, and supplies in the form of fuel and tools to have carried out the maintenance and repair responsibilities assigned to it in the work plan. It would also have needed organizational development if it was to have carried out an installation, monitoring, maintenance and repair role in a large-scale rural water supply program.

3.3.2 USAID/Tunisia

The USAID Mission in Tunis was extremely supportive of the AID handpump program and met its responsibilities.

AID/Tunis was kept informed of the progress of the work under OTD 63 and relied on guidance from Georgia Tech in making decisions about technical and monitoring procedures. Mission staff reviewed all vouchers prepared by Georgia Tech, made periodic field visits to inspect the pump installations, and kept AID/Washington (S&T/H/WS and NE/TECH) informed of their impressions of progress and relative effectiveness of the monitoring and adaptation process.

3.3.3 Georgia Tech

Georgia Tech coordinated the overall field monitoring and adaptation process. It monitored manufacturing quality and field testing results and resolved problems as they occurred within the limitations of available resources and socio-cultural conditions. It managed, guided, directed and closely monitored ENIT, which served as its local coordinator in Tunisia, and provided technical

assistance where necessary in order to fulfill its responsibility for the local manufacturing, monitoring and adaptation program. It identified and provided budgetary support in order to enlist ENIT's highly-qualified industrial/mechanical engineering expertise in support of the program and oriented its staff in quality control procedures and troubleshooting the manufacture, installation, operation, maintenance and repair of the AID handpump. It was responsible to WASH and S&T/H/WS for the overall management of the program and sent Georgia Tech personnel to Tunisia to identify and resolve problems which ENIT could not deal with. It reviewed all reports and provided detailed guidance to ENIT with regard to each site and each pump. It provided frequent, detailed progress and status reports to AID/Tunisia, S&T/H/WS and WASH.

3.3.4 Georgia Tech Coordinator (Tunisia)

The Georgia Tech Coordinator in Tunisia, as described earlier, was ENIT. The work performed by ENIT was well and professionally done and gratifying to both organizations. Georgia Tech was able to carry out precise monitoring of the AID handpumps that had been impossible before ENIT's involvement. In turn ENIT staff and students were given experience in rural development and technology transfer projects that had not been available before. This cooperation between the two organizations may well have been one of the most positive effects of the Tunisia handpump program in that it provided ENIT with the opportunity to provide engineering extension services. Through this effort ENIT's faculty, some of whom have Ph.D.'s from the United States, became known to the AID Mission, the Tunisian Government, and private industry (Fonderies Reunies) as a local resource that should be used in the future. Not only is the faculty competent from a technical standpoint, but, being Tunisian, they are more in tune with local culture than consultants from the United States or other industrialized nations. The ENIT faculty is also fluent in French and Arabic, so language is not a problem in their extension service activities.

3.3.5 Office of Health, Science and Technology Bureau, AID/Washington

S&T/H/WS monitored, managed and directed the overall effort to locally manufacture, install, monitor, readapt and remanufacture components of the AID handpump in Tunisia. It resolved problems and differences of opinion that arose, and it developed and maintained programatic and contractual mechanisms to support the continuance of the local manufacture. installation, monitoring, spare parts program and adaptation program in Tunisia. It was available for consulting throughout the handpump program and assumed ultimate responsibility for the successful transfer of the AID handpump to Tunisia.

3.3.6 Water and Sanitation for Health Project (WASH)

The WASH project also was supportive in managing the Georgia Tech component of the AID handpump program in Tunisia and serving as a central communication facility. It also provided graphics, editing, logistical and professional support in the preparation and production of the final report.

Figure 5

Site No. 2(L'Houichette/Maktar)where pump cap assembly was found missing during fourth and final field trip to Tunisia.

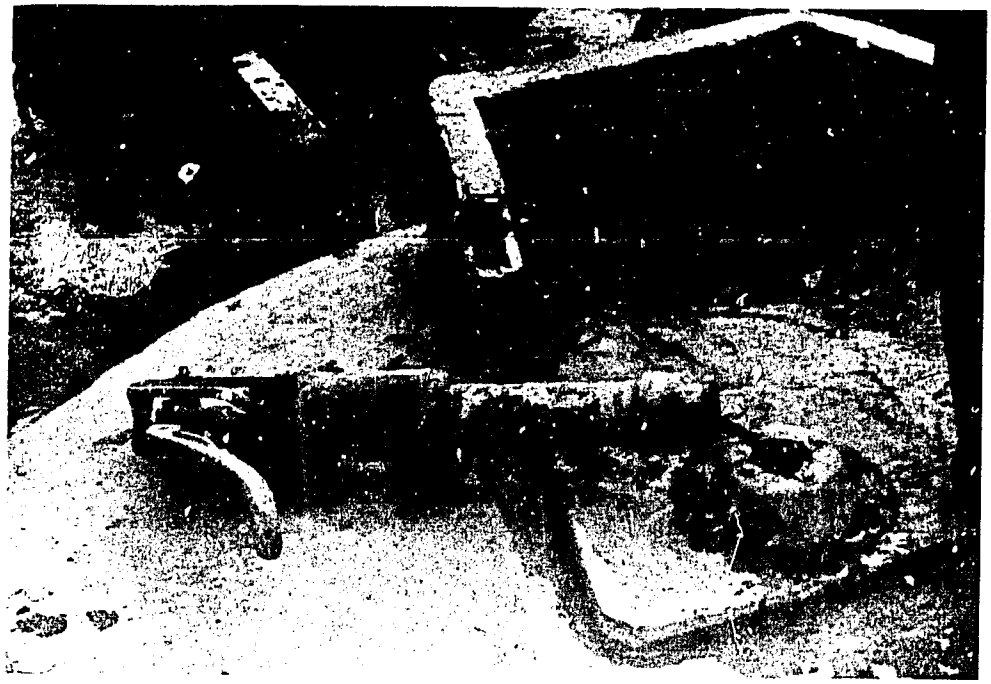

Figure 6

Site No. 4(Bir Ain Halouf/Maktar)where pump was found to be broken off at base of original design during fourth and final trip to Tunisia. This is the site where the pump was earlier broken at the base, reportedly due to a boy tying a rope to the pump and pulling it over with a donkey.

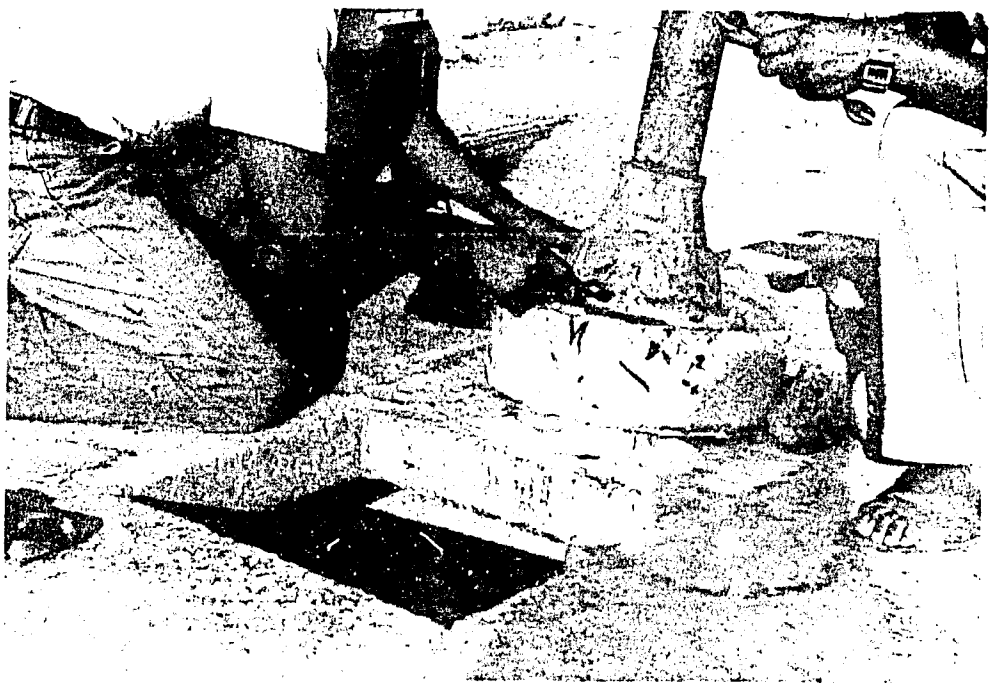

Figure 7

Site No. 6(Belhijette/Kasserine)where loose anchor bolts,a badly broken pedestal and a missing access hatch were found during fourth and final field trip to Tunisia.

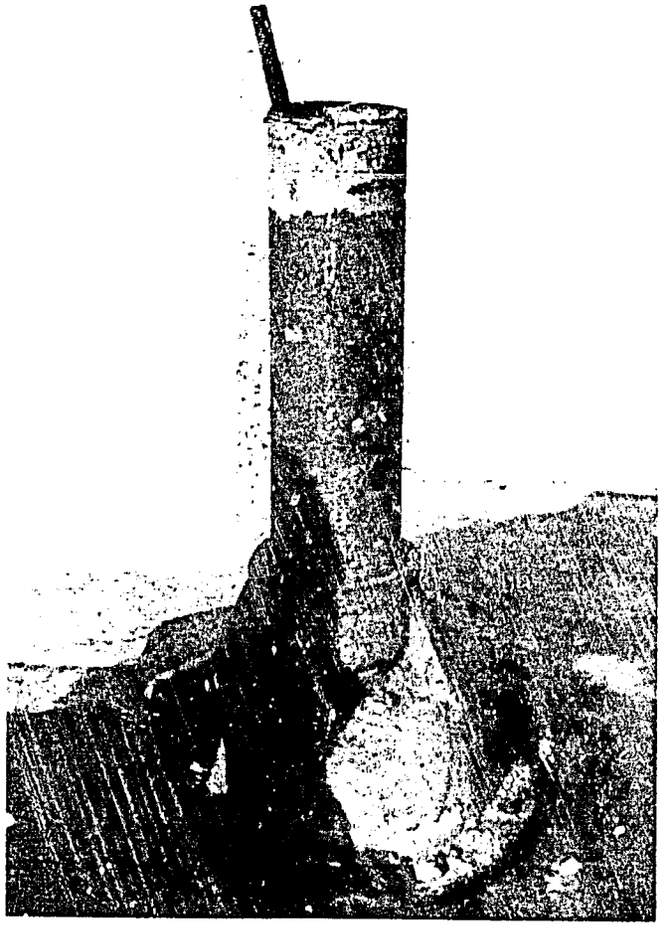

Figure 8

Site No. 7(Qued Marthoun/Kasserine) where upper portion of pump body was found broken off and missing during fourth and final field trip to Tunisia. Access hatch was also missing.

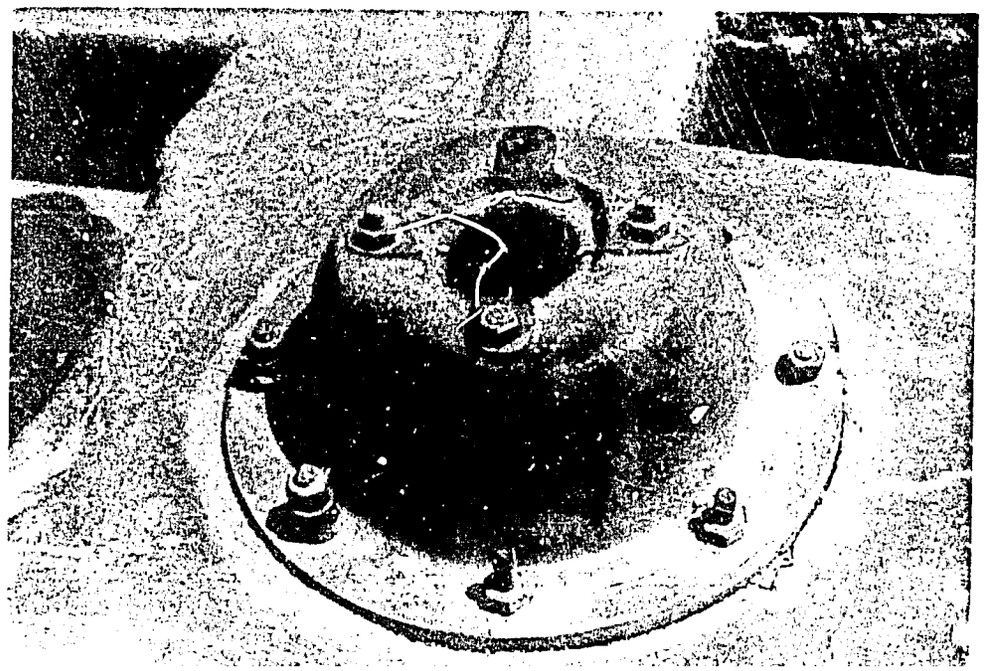

Figure 9

Site No. 9(Mlaz/Kasserine) where pump with original design base was found to be broken off at base and missing during fourth and final field trip to Tunisia. Access hatch also was missing.

Chapter 4

PERTINENT SOCIAL FACTORS INFLUENCING THE USE OF HANDPUMPS FOR WATER SUPPLY PROGRAMS IN TUNISIA*

Any rural development program must take into account the existing cultural and social factors prevailing in the area involved. There appear to be several pertinent factors related to the introduction of handpumps into rural Tunisia that should have been taken into consideration prior to the initiation of the project.

In general, the rural population lives widely dispersed throughout the country side. Homes are built in extended family clusters, but the clusters are widely scattered so there are large spaces between them. Within these spaces are some isolated houses. This can best be described as a local adaptation of the custom of family privacy prevalent throughout the Arab world and adaptation to an environment of low agricultural production. Social and economic rights and obligations are family- and clan-related and each person considers himself/herself as a member of a family rather than a community.

There are not many binding non-family ties in rural areas. This may well be because of a rural custom of marriage within the larger family group (often first cousins) rather than into another family group. The language reflects a very complex set of relationships within the families which are not found among many other languages. There are different words for paternal and maternal kin including grandparents, aunts, uncles, and cousins. All these terms are in common usage. Custom dictates that paternal relatives are more important than maternal. Thus, it is easier to gain a clear understanding of rural life in Tunisia when one realizes the extent of family ties and their pre-eminence in the life of the rural propulation. There is a lack of a greater community focus due to the concentration of each group on their own affairs.

The leaders of these family groups in rural areas are often older and lacking in formal education. Before the establishment of the Republic of Tunisia there were few opportunities for formal education in rural areas even though access to educational opportunity throughout the country now represents one of the greatest achievements of Tunisia since independence. Therefore, the decision-making members of this society are often unaware of the reasons for the covering of the open wells and the installation of handpumps. A 1980 AID Project Evaluation Report found that "generally rural Tunisians interviewed did not believe they needed cleaner water. Water is considered 'good' if it is free of visible matter and tastes 'sweet'... Many do not believe water can cause illness." The report concluded that "there is yet insufficient awareness among rural Tunisians to create a demand for improving potable water."

---

* This chapter was written with the assistance of a trained sociologist and others with field experience in Tunisia. Additional data were gathered from the AID Project Impact Evaluation Report No. 10, Tunisia: CARE Water Projects (Washington, D.C., October 1980) and Mahjoub, E.M., Traditional Health Attitudes and Practices in Tunisia (mimeo) Sousse, 1979.

Often these rural citizens become very hostile towards the covering of their wells. Many of these sites are crowded, often the open wells are of a large diameter (three to five meters), and the water is available to many individuals simultaneously. There also seems to be little tradition of "queuing up" in rural Tunisia. Individuals needing water can always find a little room at the open well not possible when there is a bottleneck at a site with a handpump. With the sudden introduction of a handpump on a covered well users are forced overnight into waiting their turn where before no wait was required. Since they cannot see any good reason for this development it is logical that they do not like such innovations as handpumps. This is often fanned by new social frictions introduced at the water point caused by frustration at waiting to use the pump. Then, every hand that touches the pump feels pressured to get finished quickly.

The above leads to a great deal of wear and tear on the pumps that would not happen if consumers were supervised by a well attendant responsible for the pumps and the well structure. Unfortunately, it was not practical to have community volunteers attend to the wells with handpumps in rural Tunisia. Attempts have been made, however, to use community volunteers at the sites rehabilitated by CARE in its earlier water projects in Tunisia. Tools disappeared and local people did not want to assume responsibility without being paid. This is easily understood when several different family groups draw water from the same well. No one family group would assign someone to a task that would benefit other groups. The result was that the pumps would be used by several hundred people without any local person being responsible. McJunkin described this succinctly in his 1976 report when he wrote "reliance on the 'villagers' will not work--everybody's pump is nobody's pump...whether in Siliana or in Yellowstone Park." Pumps were community property rather than family property. In the eyes of all concerned this would be a public, or governmental, problem.

Another factor is the traditional division of the sexes that is prevalent in the Islamic world. In rural Tunisia girls are closely supervised by women while the boys are generally allowed to roam unsupervised outside of school hours. Wells are unattended public places that naturally draw the attention of boys. Obviously, any removable parts are "fair game" in their eyes. Spurred by competition with playmates, it is easy to imagine how a handle disappears or other parts get broken. Since nearby adults, if any, may not approve of the handpump in the first place, they have little incentive to intervene with the children's play and may actually approve of this activity.

Thus, the pre-eminence of the family interest over community interest prevents communities from focusing their attention on protecting and maintaining the handpumps installed at public wells. This is reinforced by the people's conviction that covering the wells and installing handpumps not only is not necessary but is also a great inconvenience. Secondly, the non-supervision of boys allows them free access to unattended handpump sites. It should be pointed out that when the ENIT monitoring schedule became regular, damage of pumps decreased. It can be inferred from this that the pumps gained a legitimacy in the eyes of the community and more interest was taken in protecting them. When the monitoring stopped during August of 1982 (coinciding with school vacation) the pumps were once again damaged and broken.

It can be concluded that at this time any handpump is inappropriate for unsupervised public use in Tunisia. The reasons for this include:

- Unique cultural factors in rural Tunisia that contributed heavily towards difficulties experienced in the field testing of the AID handpump as well as other handpumps.

- A perception by the user populations that handpumps are unnecessary to improve their health and well being and in fact may interfere with the collection of water by several people simultaneously.

- The relatively ineffective means used to inform the rural populace about modern health and sanitary practices.

Chapter 5

CONCLUSIONS AND RECOMMENDATIONS

5.1 Conclusions

5.1.1 Social Considerations

Social factors have obviously affected the outcome of the AID handpump program in Tunisia. There has been open hostility towards covering wells and installing handpumps on them. Many rural Tunisians prefer open wells where they do not have to stand in line for gathering water. Communities are definable by family ties rather than political standards which determine responsibility for innovations such as handpumps.

5.1.2 Technical Considerations

While the AID handpump manufactured in Tunisia was not of top quality, it was of a quality comparable to that produced in other countries where field performance showed excellent results. However, the use of PVC pipe for drop pipe is a new concept that needs to be explored further before being introduced into the field. Unfortunately, because of social factors that affected the performance of the pump it was often difficult to determine if a problem was technical or social or both. As seen in Tunisia, technology cannot always be designed around social factors that might influence its performance.

5.1.3 Institutional Considerations

ENIT

From an institutional standpoint, ENIT has a capable, conscientious staff that is being underutilized in Tunisia as an engineering extension resource. Georgia Tech has used in-country counterparts for many years, and the professional level of work performed by ENIT reinforces the concept because such a counterpart provides local knowledge of language, customs, mores and the ins and outs of the host country government. ENIT's responsibility with the AID handpump was technical but perhaps should also have included consideration of the social and cultural factors related to acceptability of the AID handpump.

Tunisian Government

Also, from an institutional standpoint, there does not appear to be sufficient maintenance and repair infrastructure within the Tunisian government to undertake even a small handpump program. Naturally, such an infrastructure requires funds that allow purchase of vehicles and gasoline, the employment of health promoters, engineers and technicians, and training of personnel to carry out their assigned tasks.

5.2 Recommendations

5.2.1 Wells Program

Handpumps are not appropriate for rural Tunisia. Until rural Tunisians have a health awareness of water-related diseases that might be reduced or controlled through sealed wells and until the government establishes a maintenance and repair capability, development of open wells should be encouraged to increase the quantity and accessibility of water for those who have to travel great distances to gather the water. The open wells should be sanitary, properly prepared, inspected routinely and disinfected.

5.2.2 Health Education

It is recommended that extensive health education be a component of any future rural water supply program in Tunisia. However, before health education there should be socio-cultural determinations of the beliefs of users of the water supply programs which might affect their success or failure. It is understood that there are current plans to investigate social groupings in rural Tunisia. The results of this investigation may lead to a better understanding of the factors that influence water point locations. (These plans should be encouraged as they represent an apparent change in approach to rural water supply as a result of a November 1982 conference in Kasserine).

5.2.3 Technical Resources

Along with health education, there is a need for engineers and technicians for rural water supply programs. The USAID Mission and the Tunisian government should actively pursue these resources and the training of such individuals. The training should include problem solving and working with communities to increase the capability to monitor, maintain, and repair additional wells. Also, sociologists and anthropologists should participate in the development of rural water supply programs.

5.2.4 PVC Drop Pipe Research

The use of PVC drop pipe should be researched further before its inclusion into a handpump design.

5.2.5 Institutional Resources

ENIT should be considered as a resource in future projects of this nature. If it could develop a viable engineering extension service, donor organizations, the Tunisian government, and industry would benefit. Unfortunately, ENIT/ Georgia Tech collaboration did not evolve until late in the project which leads to the suggestion that development organizations such as Georgia Tech requiring in-country resources should establish counterpart relationships at the beginning of a project. If no extension service exists, it would be well to establish one.

5.2.6 Studies of Successful Community Programs

The AID handpump program in Tunisia was an extremely difficult project. Cultural problems were addressed through the use of Genie Rural engineers and technicians, health promoters (to a limited extent depending on their availability), ENIT, and nationals working for CARE, but social barriers to success were never really overcome. It is recommended that resources be used to study the methods of other organizations that have been able to bridge the gap between technology and culture in Tunisia. For example, while Save the Children has only a small staff in Tunisia it reportedly has been successful in stimulating local participation in its projects including the capping of springs.

5.2.7 Additional Engineering Assistance

The availability of two technically-qualified AID/Washington engineers for the AID handpump program in Tunisia in September 1981 was helpful. However, such availability should be increased to resolve problems early, to offer insight, and to meet both national and USAID Mission staff.

5.2.8 General Assistance

Because of the inter-disciplinary resources of the WASH staff, it is recommended that WASH have more input into scopes of work, especially when there is a need beyond technical matters that might require short-term social scientists.

APPENDIX A

WATER AND SANITATION FOR HEALTH (WASH) PROJECT
ORDER OF TECHNICAL DIRECTION (OTD) NUMBER 63

Dresser & McKee, Inc.
WASH PROJECT

October 19, 1981

OCT 23 1981

TO: Dr. Dennis Warner, Ph.D., P.E.
WASH Project Director

FROM: Mr. Victor W.R. Wehman, Jr., P.E., R.S.
AID WASH Project Manager

SUBJECT: Provision of Technical Assistance Under WASH Project Scope of Work for USAID/Tunisia

REFS:
A) Tunis 07472
B) Relative responsibilities document prepared by USAID/GIT/Wehman/Haratani, 9/26/81
C) Memo Haratani/Turner to Wehman (25 Sept. 81)
D) AID Contract No.: USAID/TUNISIA 664-725 (funds expended)

1. WASH contractor requested to provide technical assistance to USAID/Tunisia as per Ref. A, para. 3. A. - 3. E. and Ref. B, para. 3 and para. 4 of scope of work.

2. WASH contractor/sub-contractor/consultants authorized to expend up to 120 person days over a 12 month period to accomplish this technical assistance effort.

3. Contractor to provide draft and final report according to Ref. A, para. D. Contractor to bring field liaison coordinator (in Tunisia) to WASH CIC for briefing by WASH CIC, NE/TECH and S&T/HEA before he/she goes to Tunisia. Request detailed progress briefing after each 50 person days of activity (successes, problems, etc.) at WASH CIC.

4. Contractor to coordinate directly with USAID/Tunisia (Ms. D. Young) representatives of Genie Rural, members of National Engineering School of Tunisia, the local foundries, machine shops and suppliers, representatives of CARE, representative of the Ministry of Health (Mr. Atallah) and various others as necessary and appropriate.

5. Contractor/sub-contractor required to coordinate with and keep informed the AID/Tunisia desk officer, the NE/TECH/HNP representative (Ms. Turner and/or Mr. Haratani), the NE/PD/ENGR officer (Mr. Jim Habron) especially regarding ETA's of consultants and progress.

6. Effort is to be an intensive one with technical assistance/local coordination to take place in-country for a period of two months continuously. Contractor authorized to obtain local Tunisian technical assistance as necessary to facilitate effort within overall level of effort authorized. Contractor may have to go in and out of Tunisia several times over the 12 month period.

7. Contractor authorized up to four (4) international round trips from consultants home base through Washington to Tunisia and return to home base through Washington for debriefing during life of OTD.

8. Sub-contractor project director authorized 3 domestic round trips from Atlanta, Georgia to Washington, D.C. and return for briefings, trouble-shooting, and detailed discussions with NE/TECH, S&T/HEA and WASH CIC staffs over life of OTD.

9. Contractor authorized local in-country travel as necessary to accomplish scope of work. Contractor should assure self-sufficiency for logistics and reporting/liaison purposes and not repeat not rely on logistics and communications to be provided by any other organization as a gratis service. Consultants authorized rental of local vehicles and conveyances, rental of interpreter services and procurement of typing services as necessary for OTD implementation NTE $2,500 without request and approval by AID project manager.

10. One hundred and ten (110) person days of international and domestic per diem is hereby authorized over the 12 month period.

11. Contractor authorized up to a total of $10,000 for the purchase of mechanical handpump parts, spare parts, specially treated parts, handpump tools by subcontract from your subcontractor or his representative to local manufacturers in Tunisia or in the U.S. if necessary for specialty products.

12. Miscellaneous expenses authorized NTE $1,500.

13. Contractor/sub-contractor authorized to install and train locals in local manufacture, installation, operation and maintenance of the AID handpumps as appropriate.

14. Mission and AID contacts and subcontractor should be contacted immediately and technical assistance initiated to begin in-country by 30 October 1981 or as convenient to USAID/Tunisia. WASH CIC task manager should ensure that progress reporting as described in para. 3 of the OTD is rigidly adhered to. WASH CIC and sub-contractor should ensure backstopping of local subcontractor coordinator and consultants.

15. Appreciate your prompt attention to this matter. Good luck!

Department of State

INCOMING TELEGRAM

PAGE 01 TUNIS 07472 051609Z 9470 095715 AID6600
ACTION AID-35

ACTION OFFICE NETC-04
INFO NEWS-03 FM-02 AAST-01 CMGT-02 CPP-01 CSE-02 CTR-02
STHE-01 ENGR-02 RELO-01 MAST-01 /022 A5 1205

INFO OCT-01 /036 W
----------042402 052127Z /70

A

P 051431Z OCT 81
FM AMEMBASSY TUNIS
TO SECSTATE WASHDC 5419

UNCLAS TUNIS 7472

AIDAC FOR TURNER NE/TECH AND WEHMAN ST/HEA

E.O. 12065: N/A

SUBJ: REQUEST FOR WASH TECHNICAL ASSISTANCE ON
AID HANDPUMP PROJECT IN TUNISIA

REF: YOUNG/HARATANI/WEHMAN DISCUSION IN USAID/TUNIS 9/24/81

SUMMARY/ MISSION REQUESTS TECHNICAL ASSISTANCE FROM ST/HEA WASH CONTRACT TO PROVIDE EXTENDED FIELD MONITORING, ADAPTION AND DEMONSTRATION PROGRAM FOR THE AID HANDPUMP LOCALLY MANUFACTURED UNDER AID PROJECT CONTRACT NO. USAID/TUNISIA 664-725. MISSION SUPPORTS PAST AND PRESENT EFFORTS. PUMP STILL HAS SOME DESIGN AND MANUFACTURING QUALITY CONTROL PROBLEMS TO BE WORKED OUT. FUNDS WILL BE USED UP UNDER EXISTING CONTRACT BY END OCTOBER 1981. AS RESULT OF DISCUSSIONS WITH GENIE RURAL, MISSION BELIEVES THAT ADDITIONAL 9-12 MONTH TESTING AND ADAPTION PERIOD WILL BE NECESSARY TO MAKE HANDPUMP FULLY ACCEPTABLE. MISSION ESTIMATES THAT FIELD TESTING/ADAPTION/QUALITY IMPROVEMENT PROGRAM OF ABOUT 5 PERSON MONTHS WITH COMMODITY REQUIREMENT OF ABOUT $10,000 WILL BE NECESSARY TO ACCOMPLISH TASK OVER 9-12 MONTH PERIOD.

1. LOCAL MANUFACTURING OF AID HANDPUMP PROGRESSING SATISFACTORILY; HOWEVER, CONTRACTOR (GEORGIA TECH) HAVING COORDINATION/TRANSPORTATION AND COMMUNICATION DIFFICULTIES. WITH VISIT OF HARATANI (NE/TECH) AND WEHMAN (ST/HEA), DETAILED DISCUSSIONS HAVE TAKEN PLACE WITH ALL PARTIES INVOLVED. AS RESULT THESE DISCUSSIONS, DRAFT DOCUMENT DESCRIBING RELATIVE RESPONSIBILITIES OF ALL PARTIES HAS BEEN PREPARED. WEHMAN CARRIED COPY OF DOCUMENT TO AID/W. THIS DOCUMENT SHOULD SERVE AS BASIS FOR DETAILED SCOPE OF WORK FOR ORDER OF TECHNICAL DIRECTION UNDER WASH PROJECT. MISSION ADVISES HAT MORE TIME, DESIGN/LOCAL MANUFACTURING QUALITY CONTROL AND MONITORING NECESSARY BEFORE GENIE RURAL (GR) AND OTHERS WILL ACCEPT PUMP FOR THEIR PROGRAMS. AFTER SATISFACTORY TESTING PERIOD, GR INTENDS ADOPT PUMP FOR NATIONWIDE USE.

2. MISSION ESTIMATES THAT WASH SERVICES REQUIRED AT LEVEL OF EFFORT OF APPROXIMATELY 5 PERSON MONTHS OVER 9-12 MONTH PERIOD. ADDITIONALLY, APPROXIMATELY $10,000 FOR REMANUFACTURED PARTS AND SUPPLIES WILL BE NEEDED AS COMMODITIES.

3. SCOPE OF WORK. MISSION REQUESTS FOLLOWING CONTRACTOR SCOPE OF WORK IN CONJUNCTION WITH RELATIVE RESPONSIBITLITIES DOCMENT (PARA 1).
A. INITITATE CONTRACT/SUB-CONTRACT AS APPROPRIATE BETWEEN WASH CONTRACTOR, WASH SUB-CONTRACTOR (GIT), AND GIT SUB-CONTRACTORS AS NECESSARY IN MID-OCTOBER TO CARRY OUT TASKS BELOW.
B. AS CZE RESPOSIBILITY FOR EXISTING SPARE HANDPUMPS, HANDPUMPS INSTALLED AT TESTING SITES, SPARE PARTS, EXISTING STORES OF DROP PIPE AND DROP ROD AND MISCELLANEOUS

TUNIS 07472 051609Z 9470 095715 AID660

EQUIPMENT LOCATED IN TUNIS, BIZERTE, MAKTHAR AND KASSERINE GOVERNORATES.
C. WORK WITH FOUNDRY, GENIE RURAL, CARE, USAID/TUNIS, GEORGIA TECH, THE NATIONAL ENGINEERING SCHOOL OF TUNIS, AND OTHER SUPPLIERS AND INTERESTED PARTIES TO: (1) IMPROVE QUALITY CONTROL OF PUMP MANUFACTURED AT FOUNDRY: (2) ENSURE PUMP DESIGNS ARE PROPERLY ADAPTED TO CONDITIONS IN RURAL TUNISIA: (3) PLAN, COORDINATE, MANAGE AND IMPLEMENT INTEGRATED FIELD INSTALLATION, RE-INSTALLATION, REPAIR, MONITORING AND TRAINING PROGRAM FOR PERIOD OF 9-12 MONTHS STARTING MID-OCTOBER 1981.
D. MONITORING-ADAPTION PROGRAM IN FIELD ESTIMATED TO INVOLVE APPROXIMATELY 27 FIELD TRIPS TO EACH BIZERTE, MAKTHAR AND KASSERINE SITE AND 40 FIELD TRIPS TO TUNIS SITE. ALL SITES HAVE BEEN IDENTIFIED AND PUMPS INSTALLED.
E. REPORTING. INSURE GIT APPOINTS A LOCAL COORDINATOR FOR ALL LOGISTICAL COORDINATION AND REPORTING ON SITES AND THAT STATUS REPORTS BE CABLED OR TELEXED TO GIT BI-WEEKLY. COPIES OF TELEXES SHOULD GO TO USAID/TUNIS, WASH, AND ST/HEA. WASH CONTRACTOR REQUESTED TO DEVELOP OVERALL FINAL REPORT INCORPORATING FIRST STAGE PROGRESS UNDER AID CONTRACT/AID/TUNISIA 664-725 (BETWEEN USAID/TUNIS AND GIT) AND SUBSEQUENT PROGRESS ACHIEVED UNDER WASH PROJECT MANAGEMENT
F. WASH CONTRACTOR REQUESTED TO CABLE MISSION MONTHLY STATUS REPORT.

4. MISSION ENTHUSIASTICALLY SUPPORTS LOCAL MANUFACTURE, FIELD MONITORING AND ADAPTION OF THE AID HANDPUMP IN TUNISIA AND ACTIVELY REQUESTS ASSISTANCE FROM ST/HEA/WASH PROJECT TO PROVIDE EXTENDED ADAPTION, QUALITY CONTROL AND DEMONOSTRATION SERVICES NEEDED TO INSURE PUMP IS FULLY ACCEPTABLE FOR NATIONWIDE USE. BELIEVE THIS ACTIVITY HAS SIGNIFICANT POSITIVE POTENTIAL IN TUNISIA.
MACK

Mr. Jacobs
Austin
[illegible]

Recommend ST/HEA (Mr. Wehman) [illegible]
Passed to [illegible]

B 9/26/81

Monitoring of Handpumps/Well Sites for AID Handpump Field Adaptation Test in Tunisia

---

A. Responsibilities

1. Genie Rural

a. To accompany GIT personnel to field sites to inspect handpumps on field sites visits.

b. To accompany GIT personnel to field sites to repair, replace or adjust handpump or parts of the handpump systems.

c. To be kept informed by GIT, and A.I.D. Mission of progress of monitoring program.

d. To appoint and support GR persons in each GR Governorate in which testing is taking place to be responsible for the following:

(i) providing responsible program coordinator who will be overseeing and directing actual Genie Rural field implementation of Genie Rural Handpump Program if the AID handpump should be selected as the actual locally manufactured handpump suitable to GR for field work after the AID/GIT/GR field monitoring trials are over.

(ii) to provide at least one person per GR Governorate that would physically be responsible for physical installation, operation and maintenance (O&M) of handpumps in the GR program; or that would be receiving physical training from GIT personnel in installation, O&M of the handpumps; or that would be training other GR personnel in installation, O&M, and trouble-shooting of handpump programs. This person should be made available to accompany GIT teams to the field to participate actively with GIT personnel in monitoring, repair, adjustment, or trouble-shooting efforts.

2. USAID/Tunis

a. To be informed of overall progress of field monitoring and adaptation of AID handpump program by GIT local coordinator on every 2-week basis.

b. To be given copies of all vouchers prepared by GIT; not for approval but for review. If Mission has problems then Mission contact should contact GIT project director by cable describing discrepancy or, concern and let GIT work it out with local GIT coordinator. After working out problem GIT project director will cable Mission with resolution. If Mission still not satisfied then Mission should cable or call S&T/HEA project manager (V. Wehman) to discuss their concerns and S&T/HEA project manager will resolve the matter through the contractor if necessary with AID/W contract management or financial management involvement.

c. To periodically take inspection trip in conjunction with GIT local coordinator to visit all or selected sites as appropriate.

d. To communicate USAID's impressions of progress and relative effectiveness of monitoring/adaptation process to S&T/HEA and NE/TECH by State cable on at least a once monthly basis by cable and letter. This document (copy) should be given to GIT central coordinator and S&T/HEA will telecopy a copy of cable letter immediately upon receipt to GIT project director.

e. USAID/Tunis should rely on contractor/sub-contractor directions and guidance on all technical or monitoring procedures and decisions. Sub-contractors should be directly reporting to GIT project director and obtaining direct guidance from GIT project director. If MIssion has some problems, then Mission should contact S&T/HEA project manager (V. Wehman) by phone to discuss problem and then S&T/HEA project manager will exchange views with contractor/sub-contractor and resolve a suitable compromise if necessary. If pump system effectiveness problems are not being handled expeditously, then direct contact by Mission to S&T/HEA project manager should be initiated.

3. Georgia Institute of Technology (Atlanta)

a. To coordinate the overall field monitoring and adaptation process.

b. To be primarily responsible and timely in resolving local manufacturing problems with the Foundry in Tunis and local suppliers of drop rod, drop pipe, connectors, couplings etc. GIT to closely monitor directly or indirectly local manufacturing quality and field testing results to modify, remanufacture and supervise or direct the re-installation of the corrected, improved part.

c. To be directly responsible for guidance and direction to GIT local coordinator on technical and procedural matters relating to the local manufacturing and field monitoring/adaptation of the AID handpump.

d. To directly manage the GIT local coordinator sub-contract, provide technical assistance to the local foundry and machine shops and accept responsibility for the entire local manufacturing, monitoring and adaptation program assuming reasonable funding levels are provided to accomplish the monitoring and adaptation process.

e. To closely monitor the GIT local monitoring procedures and accomplishments and to make detailed review the GIT vouchers.

f. To identify and provide budgetary support for a local mechanical or industrial engineer who could effectively interact with the foundry and machine shops on pump part adaptations and that could accept for GIT various parts produced.

g. Carefully insure that person identified in f above is adequately trained and informed as to exactly what to look for in his quality control inspections and that individual in f above is informed of details of present and future manufacturing problems, monitoring problems and how to solve them. Contractor should provide for frequent phone conversations with local person to insure activety is on tract and that timetables are reasonable.

h. To be responsible to S&T/HEA for the overall management of the local manufacturing, monitoring and adaptation project.

i. If necessary, to send an individual to Tunisia to identify and resolve problems apparently unresolvable by the local GIT personnel, individual in f above, USAID, etc. in relation to local manufacture, monitoring or adaptation.

j. To carefully review the progress reports, trouble reports, USAID perception reports, ect with regard to each site and each pump and provide detailed guidance to GIT local coordinator and individual in f through the process.

k. To prepare detailed briefing report by site and handpump for use in phone discussions of program. Briefing report should be sent by telecopier to WASH and then provided S&T/HEA (Wehman) who will then call GIT project director after studying report to discuss options and results.

l. To prepare a final report on local manufacture, installation, monitoring and adaptation project in Tunisia similar in format and scope to Nicaragua-Costa Rica final report. Date of this final report to be established

Cont'd GIT

some time in December 81-March 82 time period as we better know of progress. Report (original) with pictures to be sent to S&T/HEA for mass production and dissemination. No elimination of final report called for under AID Contract No. USAID/Tunisia 664-725.

4. GIT Local Coordinator (Tunisia)

a. To provide local Tunisia physical logistical support, purchasing, equipment coordinators, workmen, and transportation to carry out field monitoring, installation, re-installation, repair adjustment or trouble-shooting, as necessary, to accomplish AID handpump monitoring program schedule under the general guidance and direction of Georgia Institute of Technology project director or his representative.

b. To provide support as described in 2.a. above in Tunis, Makthar, Kasserine and Bizerte Governorates for the detailed support of (a) 4 sites (5 handpumps) in Kasserine, (b) 5 sites (6 handpumps) in Makthar, (c) 1 site (1 handpump) in Tunis, and (d) 1 site (1 handpump) in Bizerte.

c. All sites have been identified, sites developed and handpumps initially installed before this monitoring program officially begins.

d. To operate under the specific written (letter, cable) directions of the GIT project director.

e. To keep GIT project director/informed by telex or by cable to WASH project of progress, difficulties, successes, logistics problems, community problems in detail on Friday every 2 weeks after initiation of program.

f. To voucher at least once every month the GIT for personnel, equipment, materials, transportation and administration costs as appropriate

g. To appoint an individual as the central local coordinator to bring together all field monitoring, local manufacturer, local equipment (drop rod, drop pipe, couplings, machining) purchasing and distribution, to coordinate billing and vouchering of vouchers to GIT, to keep the AID Mission informed of progress, to keep GR informed of progress, to physically pick up GR personnel for routine monitoring trips as described in 1.b. and 1.d. (ii), to serve as the principle local coordinator to GIT of the AID handpump tech transfer effort.

h. To actively support logistically GIT personnel with field monitoring support and transportation when GIT personnel are in any of the Governorates described in 2.b.above.

i. To carry out the routine monitoring and adjustment program as defined in attachment 1. With careful attention paid to keeping GIT informed.

j. To pay special attention to monitoring and making rapid adjustments, changes and getting rapid modifications of unsatisfactory parts of AID handpump at the official sites.

k. To number and name each handpump site and number each handpump, to keep an installation, modification, repair history on each handpump, to have the coordinator keep a separate folder on each site (handpump(s)) for review of site/performance history. No typed information is necessary.

Contn'd GIT Local Coordinator

1. To have local coordinator periodically return broken AID handpump or handpumps system parts to Mission to be shipped to S&T/HEA (Wehman) by AID pouch from Mission. Coordinator should carefully pack boxes so that no subsequent damage will occur and no box should weigh in excess of 36 pounds or be in excess of 55 inches total (combined length plus width plus height) of box. If more than one box is sent each box should be numbered 1 of 3, 2 of 3, etc. Example: box dimensions are 14 inches high plus 14 inches wide plus 30 inches long.

14 plus 14 plus 30 = 38 inches.

This would not be satisfactory. 55 inches combined is maximum total.

Once box is packed it should be addressed to the following address:

Victor Wehman
Office of Health, ST/HEA
Science and Technology Bureau
Rm 309E, SA-18
USAID/Washington, D.C. 20523

AIR POUCH

The completed air pouch box or package should then be delivered to USAID/Tunis to Ms. Dorothy Young's office and they will get it picked up by Embassy mail officials.

NOTE: A brief tag narrative should be taped to each part identifying the site, pump number and when it broke plus special remarks to give researchers better idea of failure reason, example: people hooking burro to pump to move it around, children like to beat pump with clubs or children swinging on part, people do not want handpump at this site, etc.

5. Office of Health, Science and Technology Bureau, AID/Washington

a. To manage the overall contractor/subcontractor/consultants effort to locally manufacture, install, monitor, readapt and re-manufacture components (if necessary) of the AID handpump for the US Government.

b. To closely monitor progress and perceptions of progress from the contractor, sub-contractor, USAID/Tunis and attempt to resolve inconsistencies or realign the overall direction of the activity if realignment is necessary.

c. To resolve differences in opinion from the various parties that appear beyond the realm of possibility of the contractor to resolve.

d. To actively develop and maintain programatic or contractual mechanisms to support the continuance of the local manufacture, installation, monitoring, spare parts program, and adaptation project in Tunisia related to the AID handpumps to the point where a satisfactory AID handpump is reasonably available in Tunisia in the opinion of the S&T/HEA.

e. To be available for consulting if necessary on any technical or programatic/administrative aspects of the project within reasonable notice.

f. To be ultimately responsible for the successful transfer of the AID handpump to Tunisia working closely with USAID/Tunis counterparts and contractors.

6. Water and Sanitation for Health Project (WASH) in Rosslyn, Virginia

a. To provide graphics support if necessary in the production of the final report.

b. To print 100 copies of the final report. (50 to Mission in French, - 50 to WASH and Mission in English (Mission 8).

c. To distribute copies of final report as appropriate.

d. To manage sub-contractor (GIT)/sub-contractor (CARE)/consultants elements of monitoring-adaption effort if WASH funding mechanism used to fund extended monitoring/adaptation period.

e. To serve as central communication facility for all messages (procedures to be worked out with CARE and GIT).

ATTACHMENT 1

Routine Monitoring and Adjustment Program and Schedule for AID Handpump Field Test in Tunisia

A. Monitoring of sites (routine)

1. Routine inspection/adaptation of each site once every 10 to 14 days during first 2 months. Reports due to CARE coordinator within one week of observation.

2. Routine inspection/adaptation of each site once every 20 to 30 days during third through fifth month. Reports due to CARE coordinator within one week of observation.

3. Routine inspection/adaptation of each site once every 30 days during six through ninth month. Reports due to CARE coordinator within one week of observation.

4. Final inspection/adaptation of each site at end of 12th month. Reports due to CARE coordinator within one week of observation.

B. Monitoring of selected sites (special) in Tunis

1. Special monitoring/adaptation of each site and handpump system on Wednesday of every week for the first 3 months. Report due to GIT by cable on Friday of that week each week.

OPTIONAL FORM NO. 10
JULY 1973 EDITION
GSA FPMR (41 CFR) 101-11.6

UNITED STATES GOVERNMENT

Memorandum

TO : S&T/HEA, Victor Wehman, WASH Project

DATE: September 25, 1981

THRU : NE/TECH/HPN, Barbara Turner

FROM : NE/TECH/HPN, Joseph Haratani

SUBJECT: Local Manufacture of AID Handpump in Tunisia

General

Based on a cable request from USAID/Tunis, S&T/Health provided funds to the Mission which entered into a contract with the Georgia Institute of Technology (GIT) to manufacture the AID handpump in Tunisia. From the beginning of the project the USAID/Tunis, GIT and CARE/Tunis have collaborated closely. CARE has been involved for several years in rural water supply projects in Tunisia and has a wealth of experience and information on various handpumps it has utilized in its installations. Because of the major problem of handpump maintenance experienced by CARE, it was decided that the AID handpump would be modified to simplify certain maintenance procedures, i.e. the pump cylinder and drop-pipe would be unitized to allow the removal of pump rod and piston without complete removal of the pump assembly. This modification required changes in the design of the pump body, drop-pipe, piston and cylinder assemblies and in certain installation procedures.

The local manufacturer, Fonderies Reunies, has produced the 40 pumps called for in the contract and GIT assisted by CARE has installed 13 pumps in the Makthar and Kasserine areas for testing.

Testing Program

Early in the testing program, several pumps broke at the base of the above-ground assembly. Although it was not possible to reconstruct how or why this breakage occurred, GIT decided to modify and strengthen the pump base. The new bases were installed and to date have not broken. Several other operational problems were reported to USAID and AID/W.

Project Review

On September 15, Victor Wehman, S&T/Health, and I arrived in Tunis to review the pump manufacture and testing program. We met with Fonderies Reunies representatives to discuss the pump manufacturing process and to visit the foundry. We then proceeded to visit the pump test sites in the field and to

5010-113

Buy U.S. Savings Bonds Regularly on the Payroll Savings Plan

observe pump installation procedures.

Our field visits provided us with the opportunity to identify several pump hardware and installation problems. Some of the problems are generic and others site specific. All of the problems can be resolved through changes in the pump materials and installation procedures used. These and other necessary modifications should be made during the pump monitoring period suggested below.

Continued Testing and Monitoring

Because of the problems encountered in the manufacturing and testing of the modified AID handpump in Tunisia, I am requesting that an extended pump monitoring program be supported by WASH. The basic local manufacture of the AID handpump has already been proven to be feasible. Some changes are required in the selection of hardware for the pump and accessories. The minor changes to be made in the installation procedures will require some short term training of pump mechanics. However, this program of technology transfer is well developed and should be seen to completion.

There is a great deal of interest in the utilization of the AID handpump by the GOT(Genie Rural and CTRD). We have not begun to explore the extent of private sector interest in the pump. All in all, this small program has great potential to make a significant and lasting development contribution to Tunisia and should be seen to a successful completion.

The attached draft outline of a monitoring program should form the basis of this assistance requested from WASH.

cc: USAID/Tunis

WATER AND SANITATION FOR HEALTH (WASH) PROJECT
ORDER OF TECHNICAL DIRECTION (OTD) NUMBER 63
AMENDMENT No. 1
November 02, 1982

TO: Dr. Dennis Warner, Ph.D., P.E.
WASH Contract Project Director

FROM: Mr. Victor W.R. Wehman, Jr., P.E., R.S.
A.I.D. WASH Project Manager
A.I.D./S&T/HEA/WS

SUBJECT: Provision of Technical Assistance Under WASH Project Scope of Work for USAID/Tunisia

REFERENCES: A) OTD #63, dated 19 Oct 81

1. Para. 2 of subject OTD #63 (Ref. A) is cancelled. New para. 2 of subject OTD #63 is now to read as follows:

"2. WASH contractor/subcontractor/consultants authorized to expend up to 156 person days of effort over a 15 month period to accomplish this technical assistance effort."

2. Para. 10 of subject OTD #63 (Ref. A) is cancelled. New para. 10 of subject OTD #63 is now to read as follows:

"10. One hundred and twenty-three (123) person days of international and domestic per diem is hereby authorized over the 15 month period."

3. Nothing follows.

WATER AND SANITATION FOR HEALTH (WASH) PROJECT
ORDER OF TECHNICAL DIRECTION (OTD) NUMBER 63
AMENDMENT NO. 2
23 January 1983

TO: Dr. Dennis Warner, Ph.D., P.E.
WASH Contract Project Director

FROM: Mr. Victor W. R. Wehman Jr., P.E., R.S. VWW
AID WASH Project Manager
AID/S&T/H/WS

SUBJECT: Provision of Technical Assistance Under WASH Project Scope of Work for USAID/Tunisia

REFERENCE: A) OTD # 63, dated 19 October 1981

1. Para 2 of subject OTD # 63 (Ref A) is cancelled. New para 2 of subject OTD # 63 (Ref A) is now to read as follows:

> "2. WASH contractor/subcontractor/consultants authorized to expend up to 166 person days of effort over a 19 month period to accomplish this technical assistance effort."

2. Nothing follows.

Camp, Dresser & McKee, Inc.
WASH PROJECT

JAN 24 1983

WATER AND SANITATION FOR HEALTH (WASH) PROJECT
ORDER OF TECHNICAL DIRECTION (OTD) NUMBER 63
AMENDMENT NO. 3
31 May 1983

TO: Dr. Dennis Warner, Ph.D., P.E.
WASH Contract Project Director

FROM: Mr. Victor W.R. Wehman Jr., P.E., R.S.
AID WASH Project Manager
AID/S&T/H/WS

SUBJECT: Provision of Technical Assistance Under WASH Project Scope of Work for USAID/Tunisia

REFERENCES: A) OTD # 63, dated 19 October 1981

1. Para 2 of subject OTD # 63 (Ref A) is cancelled. New para 2 to subject OTD # 63 (Ref A) is now to read as follows:

> "2. WASH contractor/subcontractor/consultants authorized to expend up to 166 person days of effort over a 21 month period to accomplish this technical assistance effort."

2. Nothing follows.

completion date
17 July

WATER AND SANITATION FOR HEALTH (WASH) PROJECT
ORDER OF TECHNICAL DIRECTION (OTD) NUMBER 63
AMENDMENT NO. 4
9 July 1983

TO: Dr. Dennis Warner, Ph.D., P.E.
WASH Contract Project Director

FROM: Mr. Victor W.R. Wehman Jr., P.E., R.S.
AID WASH Project Manager
AID/S&T/H/WS

SUBJECT: Provision of Technical Assistance Under WASH Project Scope of Work for USAID/Tunisia

REFERENCES: A) OTD # 63, dated 19 October 1981

1. Para 2 of subject OTD # 63 (Ref A) is cancelled. New para 2 to subject OTD # 63 (Ref A) is now to read as follows:

> "2. WASH contractor/subcontractor/consultants authorized to expend up to 166 person days of effort over a 22 month period to accomplish this technical assistance effort."

2. Nothing follows.

APPENDIX B

FEASIBILITY OF LOCALLY MANUFACTURING AID HAND-OPERATED WATER PUMPS AND ROBO DEVICES IN TUNISIA

Prepared by

Robert Knight
Project Designer
International Rural Water
Resources Development Laboratory
University of Maryland
College Park, Maryland 20742

Phillip W. Potts
Senior Research Scientist
International Programs Division
Engineering Experiment Station
Georgia Institute of Technology
Atlanta, Georgia 30332

for

The United States Agency for International Development
Washington, D.C.

Contract No. AID/ta-C-1354

International Programs Division
Engineering Experiment Station
GEORGIA INSTITUTE OF TECHNOLOGY
May 1980

Summary

The purpose of this report is to present findings of Georgia Institute of Technology and University of Maryland personnel in the investigation of whether or not it is feasible to manufacture the AID hand-operated water pump, the Roboscreen (a plastic well screen/filter), the Robovalve (a plastic water faucet) and the Robometer (a user-activated water meter) in Tunisia.

In investigating the need for the above hardware one must look at the need for water supply programs. Field trips into the rural areas of Tunisia leave little doubt as to the serious lack of adequate water supplies. Where sources of water are available, rural citizens walk or ride animals (burrows or camels for the most part) long distances (10-15 kilometres in many cases) to water their livestock and to gather water of questionable quality for domestic use. Where there is a source of water, the volume is insufficient to meet the demand of its users; and it may dry up during the summer months. Brackish water is encountered that is undesirable from a drinking or cooking standpoint. Because of the inadequate supply of water, feuds erupt over who should have priority over what water is available. Normal problems of water supply are also magnified by the dispersion of rural houses over large areas of land that disallow economies of scale possible in a higher density environment.

The need, therefore, is great in Tunisia for rural water supply programs to serve the dispersed population now travelling long distances to gather water of questionable quality. Hand pumps, in general, are most appropriate in such an environment because they offer lower per capita site development costs when compared to deep, drilled wells with motorized pumping and storage facilities serving the same number of people. On the other hand, deep, drilled wells usually offer a higher level of quality water. Either approach requires an effective maintenance component to be successful; however, as with lower per capita site development costs, hand pumps also offer lower operation and maintenance costs because full-time, daily caretakers are not necessary to activate pumping when storage containers need filling as with some piped systems. Due to the robust nature, low maintenance characteristics and competitive cost of the AID hand pump, it can be viewed as having a prominent role in the development of rural Tunisia.

Interventions such as the Robo devices are equally appropriate for Tunisian rural water supply programs. At many of the water points in rural areas, water is pumped into storage tanks from nearby wells housing inefficient and ineffective screens. The outlets from these tanks are ordinarily expensive and unreliable brass faucets. Such water points are manned by caretakers that do not carry out repairs but do act as a deterrent to vandalism. In these situations the Roboscreen and Robovalve could be widely utilized, but it would be premature to introduce the Robometer into the rural areas because there is no practical way to pipe and meter the water used by the large, dispersed population.

From surveys of Tunisian foundries, machine shops, plastics manufacturers and retail hardware stores, it is concluded that local manufacture of the AID hand pump and the Robo devices is technically and economically feasible as a viable alternative to expensive imports that require extended purchasing lead time and drain national currency from local circulation. One foundry (Founderies Reunies), for example, has been determined quite capable of manufacturing a high quality AID hand pump at an attractive price ($232 U.S.) when compared to imports being considered by the Government of Tunisia, USAID/Tunisia and CARE (the U.S.-manufactured Moyno at $500, F.O.B. United States, and the French-manufactured Vergnet at approximately $800 U.S., F.O.B. France).

A suggested approach for a pilot program in Tunisia is to have the foundry Founderies Reunies completely manufacture an initial order of 90 high quality AID hand pumps and provide rough castings for an additional 10 trial pumps to be machined, assembled and painted by a machine shop (Societe Chambi) in Central Tunisia. As Societe Chambi becomes more experienced with the AID hand pump components, future hand pump procurement can be handled in such a way that Societe Chambi receives a proportionally larger share of the finishing operations (depending on level of previous quality, its existing backlog of work, etc.). Societe Chambi and/or other machine shops should, in this way, eventually reach a point where all finishing operations are handled in Central Tunisia. It is also hoped that the $232 U.S. quoted by Founderies Reunies can be lowered by competitive pressures or by having the finishing operations done in Central Tunisia where labor rates for skilled machinists and overhead charges are lower.

In further regard to hand pumps it is recommended that efforts be made to expeditously upgrade, repair and maintain inoperable hand pump installations throughout Tunisia that originally resulted from USAID programs. Many of these sites are in only a minor stage of disrepair, so the time and effort to correct the cause of malfunction should be slight. Other sites will require major repair of the well structure and replacement of the hand pump (perhaps with the AID hand pump). In any event, some system should be found that provides an effective follow-up maintenance routine (even if it means bringing in another local government agency).

Societe Chambi also has the facilities for machining the Roboscreen and Robovalve if supplied necessary extruded plastic pipe with stiffening ribs and injection molded valve components. It is recommended that a PVC pipe manufacturer (Inoplast) extrude a limited amount (500 feet) of PVC suitable for the manufacture of Roboscreens and an injection molding facility (Societe des Applications Plastiques) provide an initial quantity (200) of components for the manufacture of the Robovalve to Societe Chambi for machining and final assembly. These devices then would be available for subsequent, meaningful introduction into rural water supply programs.

INTRODUCTION

The purpose of this report is to present findings of Georgia Institute of Technology and University of Maryland personnel in the investigation of whether or not it is feasible to manufacture the following described devices and whether or not the devices are appropriate for Tunisian rural water supply program.

AID Hand-Operated Water Pumps

Recognizing the need in developing countries for a reliable supply of safe water and the corollary worldwide need for a long-lasting, low-cost, easily repaired, locally manufactured hand-operated water pump, the Agency for International Development (AID) began a series of contracts with the Battelle Memorial Institute to design and laboratory test a reciprocating shallow- and deep-well hand pump for developing country manufacture and use. A final design was developed, and in late 1976 AID contracted with the International Programs Division at the Georgia Institute of Technology to evaluate (1) the performance and acceptability of the AID hand pump in comparison with other hand pumps used in developing countries and (2) the feasibility of local manufacture of the AID hand pump.

Initial field testing of the AID hand pump took place in Nicaragua and Costa Rica. With minor design modifications the AID hand pump proved to be a representation of technology transfer in its most complete form. Subsequent programs, most of which are long term and still underway in the Dominican Republic, Indonesia and Sri Lanka continue to show excellent operation and maintenance characteristics. In addition, a methodology for working with indigenous manufacturers and cooperating organizations to stimulate the local fabrication, installation and monitoring of the AID hand pump and other hand pumps has been devised and thoroughly tested. There are no patents associated with the AID hand pump, and it is adaptable to wind power or pumping into elevated storage tanks.

From the experiences gained in Nicaragua, Costa Rica, the Dominican Republic, Indonesia and Sri Lanka, the following observations are offered:

1. No matter how well a hand pump is designed and manufactured, precise care and attention must be accorded to the preparation of the well structure, the disinfection of the well water, pump installation techniques, training of local caretakers and follow-up maintenance.

2. A proper local governmental infrastructure must exist if a rural water supply program is to be effective. This infrastructure requires people qualified to plan, organize, finance, purchase, engineer, install, maintain, monitor the use of the components of the system and train local community personnel in simple maintenance techniques.

3. There is no substitute nor shortcut to proper hand pump testing before starting on large operational programs. The world is full of broken hand pumps that have been hurriedly designed and placed into mass production without sufficient, if any, laboratory testing, field testing and redesign (if necessary). While it is believed that the AID hand pump design is sound, each country considering the use of the pump should first investigate the local resources for manufacturing it and then carry out a brief program to field test the capabilities of the manufacturer and to work out unforeseen manufacturing problems.

4. The advantages and benefits of using a locally manufactured hand pump should not be underestimated. It is often quicker and easier to import a pump from another country, but this approach ignores in-country employment generation, readily available spare parts, savings in transportation, flexibility in design to meet local conditions, probable lower purchasing costs and reduced foreign exchange requirements which free in-country money for other priority needs.

Robo Devices

During the same time period that the Georgia Institute of Technology was beginning to locally manufacture and field test the AID hand pump in developing countries, the World Bank began to fund the International Rural Water Resources Developoment Laboratory at the University of Maryland for

the design of a plastic well screen which would provide something more than the traditionally available 6-8 percent open area. The obvious solution was to make a screen (the Roboscreen) with a continuous helical slot. It was determined that the manufacture of the screen should begin with a length of extruded plastic pipe containing radially located ribs. Once having this pipe with the ribs, a helical slot of a predetermined width along the length of the plastic pipe would merely be required. With local manufacture in mind, the desired slot width to suit prevailing conditions could be provided with little or no lead time as opposed to estimating and ordering imported screens months before project installation phases are scheduled to begin.

The Robovalve (a plastic water faucet) was also developed by the University of Maryland and funded by AID. There are three models of the valve (faucet): one for public standpipes, one for individual household connections and one for in-house containers. All three models were developed with local manufacture in mind, being inexpensive and virtually maintenance free. Field test results are limited at the present time; however, laboratory testing during an equivalent of 12 years of average usage has shown that the wear between the valve and valve seat was almost immeasurable. The maintenance free claim is due to the fact that the Robovalve uses only bouyancy and pressure differential to self close (there are no replaceable seals or washers to wear out).

The Robometer is a user-activated water meter also developed by the University of Maryland with AID funding. There is a working prototype, but it has not been field tested. The meter is activated by a CO_2 cartridge that could be substituted with a cylinder of compressed air. When the user activates the meter, he (she) will in fact have in storage a predetermined volume of water (for example, 3, 5 or 10 cubic meters). The water can then be used at the user's discretion. When the amount of water paid for (3, 5 or 10 cubic meters, for example) passes through the meter, it will automatically cut off until reactivated with another CO_2 cartridge. Some of the advantages of the Robometer are the elimination of administratively cumbersome and expensive meter reading, billing and collecting of water fees, as well as a more affordable method of payment for water by the user (the user pays a small amount of money to the local water agency through the indirect purchase of the CO_2 cartridge as water is consumed, rather than paying a larger charge on a periodic monthly or quarterly basis.)

NEED FOR RURAL WATER SUPPLY PROGRAMS IN TUNISIA

Current primary or secondary data on morbidity, mortality, access to potable water, etc., seems to be practically nonexistent and/or unreliable in Tunisia. What information exists indicates environmental problems due to inadequate public sanitation and scarce water supply in much of the country. Except in sections of Tunis and a few of the other larger cities, public sanitary facilities are inadequate or altogether lacking. Tunis has a central waterborne sewage system along with sufficient sewage treatment facilities; the greatest problem here and in other coastal cities is the backup of seawater into the systems. The older quarters of cities tend to be inadequately serviced.[1]

Field trips into the rural areas of Tunisia leave little doubt as to the serious lack of adequate water supplies and sanitary facilities. Where sources of water are available, rural citizens walk or ride animals (burros or camels for the most part) long distances (10-15 kilometres in many cases) to water their livestock and to gather water of questionable quality for domestic use. Where there is a source of water, the volume is insufficient to meet the demand of its users; and it may dry up during the summer months. Brackish water is encountered that is undesirable from a drinking or cooking standpoint. Because of the inadequate supply of water, feuds erupt over who should have priority over what water is available. Normal problems of water supply are also magnified by the dispersion of rural houses over large areas of land that disallow economies of scale possible in a higher density environment.

The extent of rural dispersion becomes quite evident when examining population data on Tunisia. There are aproximately 6.3 million people overall (1975 census figures projected to 1980 with an annual national average increase of 2.5 percent). About 50 percent of this 6.3 million live in rural dispersed areas or small village hamlets (1975 census figures show 34.3 percent of the total population live in dispersed houses over large areas and 18.2 percent of the total population live in hamlets defined as at least 50 persons or where

---

1/ Syncrisis: The Dynamics of Health, XV: Tunisia, U.S. Department of Health, Education and Welfare, June, 1975, p.4.

there are 10 or more buildings within 250 meters of each other). The bulk of the dispersed population and a large number of those living in hamlets are denied convenient access to safe water. As a result, there are probably some 2.5-3.0 million rural residents in need of improved water supplies. To meet United Nations goals of convenient, safe water for everyone by 1990 (for which the United States through AID is committed) is definitely a challenge in Tunisia.

The Tunisian government's Ministry of Agriculture has an elaborate organizational structure to handle the development of badly needed water sources. The relevant departments of this ministry are as follows:

1. Direction des Resources en Eau en Sol (DRES)--In general, DRES is charged with the study of water and soil resources and the evaluation of their potential use. The regional offices perform the actual monitoring and field research and administer the inventory system for water point construction and water exploitation. This regional data is synthesized at the national level and used in the conception of further studies and to direct the national pattern of water resources development.

2. Office du Developpement de la Tunisie Centrale (ODTC)--ODTC is charged with the integrated development of central Tunisia, a lagging region when compared to the overall country. ODTC assumes responsibility for formal regional development planning and for the coordination of the use of government and outside financial aid. ODTC also operates and maintains public irrigated perimeter systems that are designed and constructed by other governmental departments of the Ministry of Agriculture (Genie Rural, for example, described below).

3. Regie des Sondages Hydrauliques -- This department is the government owned well-drilling operation.

4. Direction du Genie Rural (GR) -- Genie Rural has a national center and offices in each governate of Tunisia (its major responsibility is for areas of a population of less than 500 people.) For most of the country it is Genie Rural that proposes, constructs, contracts and maintains water points and systems for rural potable water

(maintenance responsibility is shared with governate councils). Heretofore, Genie Rural has concentrated only on community standpost systems but is planning on installing hand-operated water pumps during 1981 (this is somewhat contradictory to USAID/Tunisia consultancy reports and observers interviewed for this report that maintain Genie Rural is not interested in hand pumps because they are considered to be obsolete, outdated, low-level technology that has no application in Tunisia).

In addition to the above there is the Societe Nationale d'Exploitation et Distribution des Eaux (SONEDE) which is an autonomous government agency (not under the Ministry of Agriculture). SONEDE has a large national center in Tunis and small offices in each governate. Eventually SONEDE intends to have responsibility for all water supplies for consumptive use (at the present time it only designs and implements systems for populations of over 500 persons).

A matter of particular importance is that Tunisian governmental agencies, including the Ministry of Agriculture and SONEDE, are constrained by law from procuring equipment which does not have spare parts commercially available within Tunisia. While well screens, water meters and water faucets are sold on the open market in Tunisia, there does not seem to be any hand pumps yet available. There is evidence that the U.S.-manufactured Moyno and/or the French-manufactured Vergnet may eventually be handled through Tunisian distributors, but there are no hard facts as to when this will happen. Thus, if the hand pump is to play a role in the development of Tunisia, either local manufacturers are going to have to be established or marketing channels for imports will have to be set up.

An October 1979 USAID/Tunisia subproject assistance paper, "Tunisia: Central Tunisia - Potable Water System," states the following as a further example of the need for rural water supply programs and some of the activity that is occurring to meet the demand for these programs:

> Potable water is a major Tunisian problem, as the population and irrigation are rapidly outstripping the available water resources, while rising expectation by the population and growing concern of the government for basic human needs push demand still higher.
>
> This basic human need always inadequately met in much of Central and Southern Tunisia, and even in the better endowed and wealthier

northern and coastal areas only precariously for many people, is now seen in a different light than in the past. Thus Tunisia has invested a large proportion of its scarce resources in the water sector, and welcomes a large foreign investment.

The most recent foreign assistance agreement is a $25 million IBRD loan to help fund expansion and improvement of existing primary water distribution systems in about ten intermediate Tunisian towns and assist the introduction of systems into some forty smaller rural centers...

...This IBRD loan is the latest in a series. An earlier 1977 IBRD loan provides $21 million which combined with $23.4 million provided by the Kuwait Fund, is improving water supply, distribution and disposal in greater Tunis and certain northern areas. The German Federal Republic through the KFW has pledged some DM 70 million for the southern areas, and although details are not yet firm, it is supposed to augment water supplies for the cities of Jerba, Medenine, and Zarzis and particularly for the rural areas between them.

The government has also been actively seeking concessional commercial credits, and reportedly some $9.7 million of these have been obtained in recent months for water sector needs....

AID itself, through the U.S. Peace Corps and the Cooperative for American Relief Everywhere (CARE), has admirably developed or renovated some 600 wells and springs in remote areas of Tunisia over the past 10 years. Several kinds of hand pumps have been used (for example, Dempster, a CARE design with wooden handles and Clayton Mark brass cylinders, and Godwin). Unfortunately, from visits into the rural areas of Tunisia and from discussions with CARE and AID representatives, it is estimated that perhaps 70-80 percent of these hand pumps are inoperable (1) because of poor maintenance and repair by the responsible Tunisian government agency (Ministry of Public Health) and (2) because these hand pumps could not withstand rugged Tunisian conditions.

It is concluded that it would be ideal to provide all rural residents of Tunisia with water from household connections drawing out of deep aquifers with high yield and quality. The dispersion of the rural population, however, does not lend itself to this approach because of impractical per capita costs associated with the enormous network of piping and construction that would be required to reach each rural inhabitant. Even centrally located community standposts appear impractical in many cases because this approach would also require a somewhat lesser, but still large, piping network and construction effort to reach the dispersed population.

Locally manufactured AID hand-operated water pump installations offer a viable option (provided routine maintenance and repair capabilities exist) to the rural, dispersed population of Tunisia, especially when considering their lower per capita development costs. To reach 2.5 million people (two pumps per dug well site and each site serving 200 persons) up to 12,500 hand pumps could be used to serve the existing rural population (this number does not take into consideration that there are scattered hamlet situations that are conducive to piped systems with community standposts).

For the hamlet situations that are conducive to piped systems with community standposts and for the larger, but still small, rural towns that use or are planning community standposts or piped house-hold connections the Robovalve is very appropriate. The Roboscreen is also very appropriate for Tunisia because drilled wells are quite common and necessary where suitable, relatively shallow groundwater is unavailable. As mentioned in a subsequent section on manufacturing capabilities, there is at least one company (Founderies Reunies) in Tunisia producing some 4,000 high quality water meters monthly for the Tunisian government already and there may well be a future market for the Robometer.

TUNISIAN MANUFACTURING CAPABILITIES

Tunisian foundries, machine shops, plastics manufacturers and retail hardware stores offer a wide variety of quality and price to choose from. While rural areas are lacking, urban areas have an industrial base that is quite sufficient to handle the local manufacture of AID hand pumps, Robovalves and Roboscreens (as well as many other interventions for use in rural water supply programs).

Foundries and machine shops of any significance visited for the purpose of possibly manufacturing the AID hand pump are as follows:

- Founderies Reunies, Route de Sousse Km 5.5, Megrine (telephone 295.549, 295.563, or 295.188) -- This modern, integrated foundry and machine shop is very capable of producing a quality AID hand pump. Interestingly, it presently supplies some 4,000 high-quality water meters monthly to the Tunisian government (SONEDE) and would like to expand its product line to include additional items related to water supply.

  Founderies Reunies has separate brass, bronze and aluminum departments, each complete with centrifugal and automatic molding machines. The main casting area for iron is a network of conveyor rollers and belts for material handling which gives the impression of safety as well as efficiency. There is also a sand regeneration system which is a worthwhile example of the economic reuse of materials.

  The machine shop is very well equipped with 25 lathes ranging from nine-inch to eight-foot capacity, three milling machines, a horizontal boring mill, a hydraulic arbor press, a multi-spindle drill and five drilling machines ranging from a one-half inch capacity chuck to very large radial drills.

  There are also laboratory facilities for analyzing and controlling the metallurgical content of castings, a rare luxury to be found in developing countries. Quality control is stressed by the technical director, Ing. Mohsen Nabli, and his staff, all of whom show considerable technical knowledge and insight. No foreseeable manufacturing problems are evident if this company were to manufacture

the AID hand pump.

Founderies Reunies estimates a per unit selling price of approximately 93 Tunisian Dinars (see next two pages for formal quote), or $232 U.S., for manufacturing a minimum of 100 pumps per order over a five- to six-month period. Thirty-five percent or 32.55 Dinars ($81.20 U.S.) of this price is for casting and sixty-five percent or 60.45 Dinars ($150.80 U.S.) is for machining and purchasing of parts not cast (PVC, steel bushings, nuts, bolts, leather, etc.).

Founderie Schifano, 4Km 100 Route de Sousse, Megrine (telephone 295.587) -- This foundry is owned and managed by Mr. Daruuo Schifano. Its product line is strictly castings and it has no machining facilities.

From an inspection of the foundry operations it is apparent that the AID hand pump components can be cast by Founderie Schifano at an acceptable level of quality. The fact that the machining must be done elsewhere is not viewed so much as a problem but as an opportunity to develop small-scale industry (for instance, the AID hand pump could be machined and assembled by a machine shop in the Central Tunisian area where hand pumps are badly needed and where industrial development should be encouraged).

If Founderie Schifano were to cast the AID hand pump (no machining or assembly), the estimated cost would be 20 Tunisian Dinars ($50 U.S.).

Societe Industrielle du Nord, Zone Industrielle de Ben Arous, Tunis (telephone 298.267) -- This business concern deals mostly with centrifugal pumps where the owner and Manager, Mr. Mohsen Chaari, buys the cast and machined components from external sources for his own assembly operations and then markets the finished product. Although Mr. Chaari is interested in making the AID hand pump, it is felt that this approach is too inefficient (as evidenced by the company's estimated per unit cost of close to 200 Tunisian Dinars, or $500 U.S., for the pump).

Ste. de Founderie et de Mecanique (SOFOMECA), Rte. de Sousse km 5, Megrine (telephone 259.088) -- This integrated foundry and machine

الرسائل المترجمة

LES FONDERIES REUNIES

FONDERIE - MECANIQUE - PLASTIQUE

NOTRE CODE POSTAL :2033

A. I. D

N/Ref: DGA/ES/BAS -80/ [illegible]

V/Ref : V/DEMANDE DE PRIX VERBALE

Mégrine, le 29 Avril 1980

Messieurs,

Faisant suite à votre demande de prix verbale, nous vous prions de trouver ci-après, nos meilleures propositions :

CONDITIONS DES PRIX.- Taxe en sus de 8,69%

DESIGNATIONS	Nbre	Plan	Matière	Outillage	P.U. Départ Usine	PRIX TOTAL
-PUMP CAP	1	2027	Ft 18	250,000D	7,500 D	7,500 D
-SLIDING BLOC	2	2026	Acier	Néant	0,750 D	1,550 D
-HANDLE FULCRUM	1	2029	Ft 18	120,000D	2,250 D	2,250 D
-SHORT BUSHING-STEEL	2	2033	Acier	Néant	0,870 D	1,740 D
-LONG BUSHING-STEEL	1	2034	Acier	Néant	0,870 D	0,870 D
- ROD END	1	2004	Acier	Néant	1,330 D	1,330 D
- PLUNGER ROD	1	2003	Acier	Néant	1,100 D	1,100 D
- VALVE FLAPPER	1	2021	Acier	Néant	0,770 D	0,770 D
- CHECK VALVE ASSY	1	2015	Acier	Néant	1,500 D	1,500 D
- PUMP CYLINDER	1	2014	Acier	Néant	4,500 D	4,500 D
- ROD PIVOT PIN	1	2013	Acier	Néant	1,150 D	1,150 D
- HANDLE PIVOT PIN	2	2005	Acier	Néant	1,050 D	2,100 D
- PUMP STAND ASSY	1	2010	Ft 18	275,000D	7;000 D	7,000 D
- PUMP BODY	1	2007	Ft 18	300,000D	10,000 D	10,000 D
- PLUNGER CAGE	1	2017	Laiton	120,000D	1,700 D	1,700 D
- PLUNGER POPPET	1	2018	Acier	Néant	1,000 D	1,000 D
- PLUNGER FOLLOWER	1	2031	Laiton	200,000D	2,000 D	2,000 D
- PLUNGER SPACER	1	2032	Laiton	Néant	1,300 D	1,300 D
- LEATHER CUP	2	2019	Cuir	Néant	0,500 D	1,000 D
- CYLINDER END CAP	1	2025	Ft 18	170,000D	3,500 D	7,200 D
- CHECK VALVE WEIGHT	1	2022	Acier	Néant	0,685 D	0,685 D
- HANDLE	1	2003	Ft 18	120,000D	13,000 D	13,000 D
- BRASS VALVE SEAT	1	2024	Bronze	Néant	1,150 D	1,150 D
- Cylinder P.V.C	1	-	PVC	Néant	1,500 D	1,500 D
- Peinture	-	-	-	-	6,000 D	6,000 D
- Goupilles	6	-	Acier	-	0,200 D	1,200 D
- Montage	-	-	-	-	12,000 D	12,000 D
				1555,000D	→	93,100 D

(B 2.32.754.5-(1D=$2.5

DELAI.- 5 à 6 mois à dater de votre commande ferme.

PRIX.- A Négocier.

Restant à votre entière disposition,

Veuillez agréer, Messieurs, nos salutations distinguées.

LA DIRECTION GENERALE

LE SOUS-DIRECTEUR
S.FERRATON

P.J : Formule de révision des prix.

shop is similar to Founderies Reunies but much larger. An appointment was made to meet with the technical director to discuss manufacturing the AID hand pump and to obtain cost data, but the director did not show up for the meeting. While cost data is lacking (a later meeting was not possible because of time constraints), there is no doubt that this company can supply the AID hand pump at an acceptable level of quality; however, prior experience indicates that the cost for the pump would probably be higher here than at Founderies Reunies because of the company's size and related overhead charges.

Society Chambi, Avenue Farhat Hached, Kasserine (telephone 07/70603) --USAID/Tunisia considers Central Tunisia as an area of priority and is preparing a program with the Central Tunisia Development Authority (CTDA) that includes a water component and stimulation of small-scale industry, both of which the AID hand pump fits. Societe Chambi was visited in the Central Tunisian city of Kasserine to determine the potential of at least partially producing the AID hand pump (there are no foundries in the area) as part of the CTDA program.

Societe Chambi is an owner-operator machine shop type establishment (no casting facilities), small, but very well equipped with relatively new machines: three lathes (11-inch, 14-inch and 18-inch capacity), a combination milling/drilling machine, a crankshaft grinder, a cylinder head valve and valve seat grinder, a cut-off saw and an hydraulic arbor press. Most of the work being done is of the automotive type (parts for Volvo, Fiat, etc.), but the machining of the AID hand pump, as well as the Robo devices is within its capabilities.

Plastic manufacturers visited for the purpose of possibly producing Robovalves, Roboscreens and Robometers are as follows:

1. Societe des Applications Plastique, 4 & 6 Rue Mechain, (Montfleury) Tunis (telephone 492.612 and 495.284) -- This company has a quality-conscious operation that includes in its product line items from cigarette lighters to plastic tables and chairs. Plastic containers (see Exhibit 1, following page) are also produced here that are

Exhibit 1

PLASTIC CONTAINERS PRODUCED BY SOCIETE DES APPLICATIONS PLASTIQUE

UNE SOLUTION: POUR TOUS VOS EMBALLAGES

AGRICOLE & INDUSTRIELLE

NOUS PROPOSONS DES ARTICLES EN PLASTIQUES. P. HAUTE DENSITES.
ALIMENTAIRES, RESISTANTS A TOUS PRODUITS CHIMIQUE TRAITES
AUX (ULTRAS VIOLET)

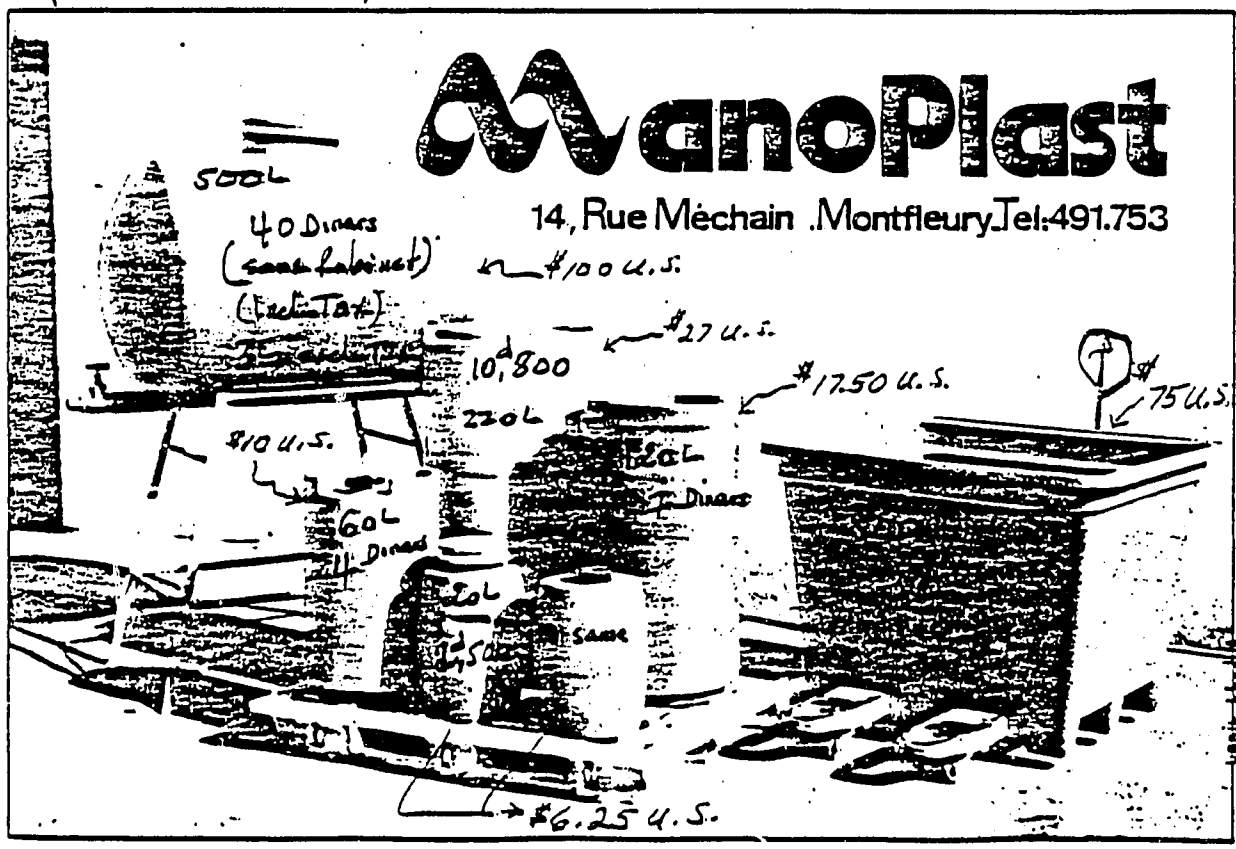

CITERNE.500L.BAC:500L.FUTS:220L_ 120L_ 60L_ 20L_

adaptable to household water containers with purification units. Production equipment and machinery (Rotomolding machines, compression and injection molding machines and plastics extruders) are new, in good condition and well laid out in the plant for efficient operations.

The Director, Mr. Fethi Ben Yahia, is a positive, open-minded businessman who sees a large potential market for the household Robovalve and appears eager to introduce it into his already large variety of products. In fact, Mr. Yahia, on his own, has contacted several government agencies and was further encouraged to find that there is indeed a market for this type Robovalve.

The household Robovalve is estimated by this company to be marketable and profitable at a selling price of .2 Tunisian Dinars ($.50 U.S.). The public standpipe (community) Robovalve was not quoted because of a lack of interest by local government representatives and plastics manufacturers due to potential installation problems (the two-inch pipe thread would have to be reduced and adapted to 15 millimeters or smaller). The in-house container type Robovalve is adaptable to the company's present line of containers with only a small increase in container cost (.2 Tunisian Dinars or $.50 U.S.) and would make the containers more marketable in rural areas where in-house storage is commonplace and necessary. If a disinfecting unit were added to the containers, there should be an accompanying increase in quality of water.

Inoplast, 68 Ave. F. Hachad, Tunis (telephone 254.255) -- Inoplast (Mr. Mohamed Hachicha, Director) extrudes plastic pipes and should not have any unusual difficulty in supplying PVC to local foundries for AID hand pump cylinders or in making Roboscreens even though limited equipment will have to be purchased for the slotting process. Mr. Hachicha is familiar with expensive metal well screens that are presently being imported into Tunisia because of his business contacts with well drillers and foresees a lucrative market for himself if the Roboscreen is manufactured and proven successful in Tunisia. If Inoplast were to manufacture the complete Roboscreen, the estimated cost would be .8 Tunisian Dinars ($2 U.S.)/ft. versus

as much as $40-50/ft. for some imports. If so desired, the slotting of the extruded pipe could be handled by a machine shop in Central Tunisia.

3. Societe Comerciale et Industrielle des Produits en Plastique, Rue des Travailleurs la Manouba, Tunis (telephone 910.252) -- This company only produces light gage drainage pipe and has no injection molding facilities. The manufacture of the Robo devices is not possible here unless a large capital investment in additional equipment is undertaken.

CONCLUSIONS AND RECOMMENDATIONS

Local manufacture of the AID hand pump and the Robo devices in Tunisia is technically and economically feasible as a viable alternative to expensive imports that require extended purchasing lead time and drain national currency from local circulation.

The need is great in Tunisia for rural water supply programs to serve the dispersed population now travelling long distances to gather water of questionable quality. Hand pumps, in general, are most appropriate in such an environment because they offer lower per capita site development costs when compared to deep, drilled wells with motorized pumping and storage facilities serving the same number of people. On the other hand, deep, drilled wells usually offer a higher level of quality water. Either approach requires an effective maintenance component to be successful; however, as with lower per capita site development costs, hand pumps also offer lower operation and maintenance costs because full-time, daily caretakers are not necessary to activate pumping when storage containers need filling as with some piped systems. Due to the robust nature, low maintenance characteristics and competitive cost of the AID hand pump, it can be viewed as having a prominent role in the development of rural Tunisia.

Interventions such as the Robo devices are equally appropriate for Tunisian rural water supply programs. At many of the water points in rural areas water is pumped into storage tanks from nearby wells housing inefficient and ineffective screens. The outlets from these tanks are ordinarily expensive and unreliable brass faucets. Such water points are manned by caretakers that do not carry out repairs but do act as a deterrant to vandalism. In these situations the Roboscreen and Robovalve could be widely utilized, but it would be premature to introduce the Robometers into the rural areas because there is no practical way to pipe and meter the water used by the large, dispersed population.

Since it is technically and economically feasible to manufacture the AID hand pump and Robo devices and as local manufacture offers many benefits to Tunisia, it is recommended that these interventions be included in the

water component of USAID/Tunisia's upcoming program with the Central Tunisia Development Authority.

Founderies Reunies has been determined quite capable of manufacturing a high quality AID hand pump at an attractive price ($232.U.S.) when compared to imports being considered by the Government of Tunisia, USAID/Tunisia and CARE (the U.S.-manufactured Moyno at $500 U.S., F.O.B. United States, and the French-manufactured Vergnet at approximately $800 U.S., F.O.B. France). A suggested approach to the CTDA program is to have the foundry Founderies Reunies completely manufacture an initial order of 90 high quality AID hand pumps and provide rough castings for an additional 10 trial pumps to be machined, assembled and painted by the machine shop Societe Chambi in Kasserine. As Societe Chambi becomes more experienced with the AID hand pump components, future hand pump procurement can be handled in such a way that Societe Chambi receives a proportionally larger share of the finishing operations (depending on level of previous quality, its existing backlog of work, etc.). Societe Chambi and/or other machine shops should, in this way, eventually reach a point where all finishing operations are handled in Central Tunisia. It is also hoped that the $232 U.S. quoted by Founderies Reunies can be lowered by competitive pressures or by having the finishing operations done in Central Tunisia where labor rates for skilled machinists and overhead charges are lower.

In further regard to hand pumps it is recommended that additional funding and efforts be made available to expeditously upgrade, repair and maintain the inoperable hand pump installations throughout Tunisia that originally resulted from USAID programs. Many of these sites are in only a minor stage of disrepair, so the time and effort to correct the cause of malfunction should be slight. Other sites will require major repair of the well structure and replacement of the hand pump (perhaps with the AID hand pump). In any event, some system should be found that provides an effective follow-up maintenance routine (even if it means bringing in another local government agency).

Societe Chambi also has the facilities for machining the Roboscreen and Robovalve if supplied extruded plastic pipe with stiffening ribs and injection molded valve components. As a part of the CTDA program, it is recommended that Inoplast extrude a limited amount (500 feet) of PVC suitable

for the manufacture of Roboscreens and Societe des Applications Plastiques provide an initial quantity (200) of injection molded components for the manufacture of the Robovalve, to Societe Chambi for machining and final assembly. These devices then would be available for subsequent, meaningful introduction into rural water supply programs.

APPENDIX C

GEORGIA INSTITUTE OF TECHNOLOGY

ENGINEERING EXPERIMENT STATION

Atlanta, Georgia 30332

Monsieur Ridha Bouhalila
Director
Laboratoire Central
23, Rue Jawaher Lel Nehru
Montfleury, Tunis.

Dear Mr. Bouhalila:

We would greatly appreciate your cooperation in performing an analysis for lead in a PVC (poly vinyl chloride) pipe sample left with Mr. Salah Turki on Saturday, September 20. The analysis should include the following:

1. Lead content in the pipe material
2. Lead content in water passing through the pipe material.

The lead content in both the pipe and water samples should be analyzed by careful digestion with perchloric acid under a reflux ring condenser (with distilled water rinsing of the condenser between samples).

The sampling procedure for the water samples should be as follows:

1. Run a blank sample of the water and reagents
2. Take samples at 15 minute intervals for the first hour, 30 minute intervals for the second and third hours, and hourly samples thereafter.
3. Use a constant flowrate not to exceed 15 lpm.

The test may be stopped after the 24th hour or if the lead content in the water passing through the pipe reaches a constant or zero value. The sample size should be sufficient to run duplicate analyses for each sample.

As was discussed with Mr. Turki, the lead in the PVC is of organic nature and, thus, volatile. Therefore, precautions must be taken not to lose the lead during the preparation or digestion of the samples.

The results of the analysis should be mailed to the following address:

Ms. Dorothy Young or Mr. Chedli Zarg El Ayoun
Office of Rural Development
Mission Américaine
149, Avenue de la Liberté
Tunis, Tunisia

Thank you for your cooperation.

Sincerely yours,

for Dr. Ibrahim El Barbery
Georgia Tech. Consultant
Office of Rural Development
Mission Américaine

G E O R G I A I N S T I T U T E O F T E C H N O L O G Y

ENGINEERING EXPERIMENT STATION

Atlanta, Georgia 30332

(Traduction Officieuse)

Monsieur Ridha Bouhalila
Directeur du
Laboratoire Central
23 Rue Jawaher Lel Nehru
Montfleury, Tunis

Monsieur le Directeur,

Nous avons l'honneur de vous demander votre aide pour une analyse de la teneur en plomb d'un échantillon de conduite C.V.P. (chlorure de polyvinyle) que nous avons remis à Monsieur Salah Turki le Samedi 20 Septembre. L'analyse doit inclure ce qui suit:

1. Teneur en plomb du matériau de la conduite
2. Teneur en plomb de l'eau passant dans cette conduite

La teneur en plomb présente dans les échantillons de la conduite et de l'eau doit être analysée par digestion complète avec l'acide perchlorique dans un condensateur à reflux (avec nettoyage du condensateur à l'eau distillée entre les échantillons).

La procédure d'échantillonnage pour les échantillons d'eau sera comme suit:

1. Préparer un échantillon d'eau et de réactifs.
2. Prélever des échantillons à des intervalles de 15 minutes pendant la première heure, de 30 minutes pendant la seconde et la troisième heures, et des échantillons toutes les heures par la suite.
3. Utiliser un débit constant ne dépassant pas 15 lpm.

Le test peut être arrété après 24 heures ou si la teneur en plomb de l'eau passant dans la conduite atteint une valeur constante ou est égale à zéro.

La dimension de l'échantillon doit être suffisante pour procéder à des analyses doubles pour chaque échantillon.

.../...

Tel que discuté avec Monsieur Turki, le plomb dans le C.V.P. est de nature organique et, donc, volatil. Par conséquent, toutes les précautions doivent etre prises afin de ne pas perdre le plomb pendant la préparation ou la digestion des échantillons.

Les résultats de l'analyse doivent etre envoyés à l'adresse suivante:

Mme Dorothy Young ou M. Chedli Zarg El Ayoun
Service de Développement Rural
149, Avenue de la Liberté
Tunis, Tunisie

Avec mes remerciements pour votre coopération, nous vous prions d'agréer, Monsieur le Directeur, l'expression de notre considération distinguée.

Dr. Ibrahim El Barbery
Consultant à l'Institut
Technologique de Géorgie
Service de Développement
Rural
Mission Américaine

TECHNICAL REPORT ON THE DURABILITY AND SAFETY OF USING PVC PIPE IN POTABLE WATER DISTRIBUTION SYSTEMS

by

Dr. Ibrahim El-Barbary
International Programs Division
Georgia Institute of Technology
Atlanta, Georgia, U.S.A.

The United States Agency for International Development (USAID) contracted the Georgia Institute of Technology (Georgia Tech) on August 30, 1980 to provide technical assistance to USAID and the Government of Tunisia in locally manufacturing and field testing the AID hand-operated water pump, the Roboscreen (a plastic well screen) and the Robovalve (a plastic, self-closing water faucet). PVC (poly vinyl chloride) pipe is not commonly used in Tunisian water supply programs; however, it will be used in the manufacturing process for the hand pumps and the Roboscreen. This report has, therefore, been prepared to discuss the durability, performance and safety of PVC pipe in potable water applications.

Background Information

The National Sanitation Foundation (NSF) Testing Laboratory, a widely respected research organization located in the Uniated States, has studied extensively PVC plastic pipe performance in potable water applications.[1/] It reports that PVC pipe, as produced today, can perform safely and well in water service areas when used within its pressure, temperature and chemical limitations. This type of pipe has good chemical resistance, is not subject to electrolytic corrosion, and is normally affected little by inorganic corrosive materials. Furthermore, PVC pipe is light in weight with specific gravity in the range of 0.9 to 1.4. For comparison, the specific gravity of iron is 7.86.

PVC pipe has a smooth surface and maintains this characteristic because it is non-scaling and has a hydrophobic surface (not water soluble). It acts as a thermal and electrical insulator. PVC pipe is easily handled, formed and machined. In general, PVC pipe is competitive with carbon steel

pipe and much cheaper than corrosive resistant alloys. Low installation and maintenance costs add to the economy of its use. PVC pipe has good dimensional stability and excellent weathering characteristics. It also has excellent mechanical strength and rigidity and can be readily threaded when the wall thickness permits.

PVC pipe extruded in accordance with commercial standards[1/] assures that the working pressures for a given pressure rating are comparable. PVC pipe is produced in sizes 1/2 through 16 inches and is produced to perform with working pressures of 50 pounds per square inch (psi) to 315 psi for unthreaded pipe and for threaded pipe from non-pressure rated to 630 psi. These pressure ratings are based on hydrostatic design stresses and are calculated from the dimensions of the pipe by means of the International Standard Organization equation (ISO) as follows:

$$\frac{2S}{P} = \frac{OD}{T} -$$

or

$$\frac{2S}{P} = \frac{ID}{T} +$$

Where: S is hydrostatic design stress (psi)
P is pressure rating (psi)
OD is average outside diameter (inches)
ID is average inside diameter (inches)
and T is minimum wall thickness (inches)

The NSF Testing Laboratory is currently using the following specific standards in the evaluation of PVC pipe for potable water applications:

1. Commercial standards of U.S. Department of Commerce
2. American Society for Testing and Material (ASTM) Standards and Test Procedures
3. United States of America Standards Institute (USASI) now called American National Standards Institute (ANSI)
4. The American Water Works Association (AWWA) Standards

The performance specifications of the preceding commercial standards are based on a simulated 50-year life and include, as required by the applicable standard, the following tests:

1. Environmental cracking
2. Incremental pressure
3. Quick burst
4. Sustained pressure (1,000 hours)
5. Chemical resistance
6. Impact resistance
7. Heat deflection
8. Dimensions and tolerance

NSF evaluations dealing with the toxic influence of PVC materials to health and using ASTM test methods, U.S. Public Health Services Drinking Water Standards and the American Public Health Association Standards are performed on materials to be used in production of pipe or fittings for transporting drinking water. The same tests are also conducted on samples of finished products as well as on joining compounds which are ultimately used in potable water. Naturally, it is imperative that PVC pipe permitted in contact with potable water not contribute impurities in concentrations which may be hazardous to the health of the consumers.

Stabilizers

Various compounds are incorporated in PVC resin formulations as stabilizers to improve the physical properties of the final product.[3/] Stabilizers are necessary for the preservation of the PVC compound during usage and more importantly during processing. A well stabilized PVC compound produces a pipe with better stress characteristics and impact resistance. A large number of stabilizers include characteristics, as well, for preventing heat and light degradation, and all of these should attempt to meet the following requirements:

1. They should react readily with the degradation products. The reaction product should be insoluble and neutral. Neither the stabilizer nor the reaction product should have any harmful effect on the color, durability, odor, water resistance or neutrality of the compound.

2. They should disperse readily and should be well bonded to the PVC material not only initially but after aging as well.

3. They should inhibit the start of degradation through heat and light. This means that they should filter out ultraviolet light.

4. Preferably they should be nontoxic

5. They should have many miscellaneous properties such as low cost and should be able to be used in small proportions.

Obviously, no one stabilizer will have all of these properties, but there is a number of mixed stabilizers which closely approach these ideal requirements. They are grouped in five main groups as follows:

1. Lead salts or soaps
2. Tin salts and soaps
3. Other metal soaps or salts
4. Organic and miscellaneous stabilizers
5. Mixed stabilizers

Generally, lead stabilizers are by far the most widely used in PVC pipe extrusion, but are not used in the United States in pipe intended for potable water use. Lead stabilizers are used, however, in pipe manufactured in Europe and in Japan intended for potable water use.[4/]

Tin stabilizers are the leading stabilizers, in frequency of use, for water supply pipe manufactured in the United States. A market survey was conducted in 1977 by the Georgia Institute of Technology, wherein twenty PVC pipe manufacturing companies were contacted and tin stabilizers were reportedly being added at an average of 0.7 parts per 100 parts resin with an average percent in pipe formulation of 0.7%. The major types of tin stabilizers used were methyl, butyl, and octyl tin mercaptide. The survey also showed that more than 40% of the PVC pipe manufactured in the U.S. goes to potable water applications.

The British Plastic Federation and other bodies now accept di-n-octyl tin salts[5/] as nontoxic stabilizers and therefore can be used in food applications. A calcium stearate stabilizer is quite widely used, particularly in the United Kingdom. Calcium stearate is nontoxic and both the United States Food and Drug Administration and the British Plastic Federation[6/] have accepted its use in food applications. Lithium stearate[6/] is also regarded as a nontoxic substitute for barium, lead and cadmium stabilizers.

Research of PVC

As mentioned previously, extensive research on PVC pipe for potable water has been conducted by NSF. This continuing testing program has extended over the past 17 years and has demonstrated that thermoplastics can be used with public health safety and confidence if they have been tested and identified as conforming with acceptable standards. The testing programs have disclosed less than 5% failure for all pipe tested, with some materials showing about 1% failure.[2/] Practically all failures noted are due to noncompliance with design specifications or extrusion problems.

The NSF Testing Laboratory has tested lead stabilized PVC plastic pipes produced in foreign countries as well as some produced in the United States. In several static experiments[4/] on PVC pipe filled with water, the majority of the lead was given off in the first three days of standing (72 hours). After this time, leaching rapidly decreased and showed little further change after ten or fifteen days. The total quantity of lead extracted in this period was low relative to the total initial lead content of the pipe. (Migration of lead from the bulk of the PVC pipe apparently takes place slowly, if at all.)

The results of a study for the Georgia Institute of Technology conducted by the Tunisian Central Laboratory on lead-stabilized PVC pipe manufactured in Tunisia produced results similar to those obtained by the NSF study (see attached laboratory results, Appendix A). The amount of lead leached into the water was very small compared to the total initial lead content of the pipe, 0.2 parts per million (ppm) and 230 ppm, respectively. Extractable lead was given off in the first flush in less than five minutes. (The continuous water flow through the pipe was at a steady flow rate of 2.8 gallons/minute to simulate a hand-operated water pump operation.) Samples removed during the next 23 3/4 hours of flushing showed no trace of lead. (The limit of lead concentration permitted by the World Health Organization standards, which Tunisia adheres to, is 0.3 ppm. The extractable lead in a PVC pipe is apparently confined to a surface film of residual stabilizer left during the extrusion process and not as a result of pipe deterioration. This film is removed rapidly as the pipe is flushed out.)

A test of possible harmful effects of plastic PVC pipe on potable water has also been performed with colonies of wistor strain white rats by NSF at the United State's University of Michigan School of Public Health. For 18 months, the test animals drank exclusively water that had been in contact with various thermoplastics including PVC for 72 hours at 100°F. The records on each animal's health during the study and the results of autopsies, as appraised by pathologists, showed no evidence of any damaging actions attributable to the possible extractants in the test water.

Tin-stabilized PVC pipes manufactured in the United States were tested for materials leached into water at the Engineering Experiment Station of the Georgia Institute of Technology. These tests were fundamentally similar to NSF static tests previously reported. The period of standing and the temperature were also the same (72 hours and 100°F). The sections of the PVC pipe used were 3 feet, plugged with polyethylene film (pretested) and filled with water for the length of the test. The majority of tin was released in the first day of standing. After this, the amount decreased rapidly and reached very low levels of a few parts per million. The total quantity of tin extracted was low relative to the initial tin content of the PVC pipe A summary of the static test results generated are presented below:

Manufacturer	Tin Content in ppm after 72 hrs. at 100°F
Ruth-berry	.004
Thermo Plascic Corp	.016
Tridyn Industries	.019
Harvel	.004
Robintech	.004

Unused, or fresh, PVC pipes were then dynamically tested for leached tin in a 148-foot pipe loop testing facility complete with a polyethylene 100-gallon reservoir. The reservoir was cleaned and prepared for three days of continuous operation, and the flow rate was calibrated to a steady 10.2 gal/minute. The reservoir was charged with 60 gallons of high purity water. Samples were removed after 16 hours and 42 hours of circulation.

These samples showed 0.1 ppm and 0.2 ppm tin contents, respectively. The system was then drained, flushed well and recharged with 45 gallons of the high purity water.

A second run on the same pipe was then conducted under the same conditions as before. Samples were periodically withdrawn and analyzed. The results of the second run are presented below:

Sample withdrawn after 20 hours in the loop gave .001 ppm tin.
Sample withdrawn after 41 hours in the loop gave .006 ppm tin.
Sample withdrawn after 88 hours in the loop gave .006 ppm tin.

It is clear that the amount of extracted tin from the pipe loop is considerably lower than was observed in the analysis of the unused pipe. The first extraction seems to flush residual stabilizer left on the surface of the pipe during the extrusion process. After that, evidence of tin rapidly decreases and subsequent extractions of the pipe with water give no trace of tin even after extended periods of time.

Recent information received from the NSF Testing Laboratory indicates that there is a renewed interest in the United States for the use of lead-stabilized PVC. NSF is constantly testing PVC pipe for lead, and these tests have shown lead concentrations to be well below the United States Environmental Protection Agency drinking water standard of 0.05 ppm lead with very few exceptions.

The British Standard 3505 amended in 1966 specifies that lead extracted from the internal walls of PVC pipe shall not exceed 1.0 ppm in the first wash (72 hours and 100°F) and 0.3 ppm in the third wash (of 72 hours and 100°F). It states that conformity with this <u>will insure</u> that the 1963 WHO recommendations (Appendix B) concerning toxic contaminants of drinking water are not exceeded. This is in line with the results of testing Tunisian PVC.

Conclusions

Test conducted in Peru[4/] in 1965, those done by NSF as well as those by the Central Laboratory of Tunisia on lead-stabilized PVC and by the Georgia Institute of Technology on tin-stabilized PVC lead to conclude:

1. For PVC pipe stabilized with lead or tin, the concentration of lead or tin in the extracting water is extremely low and is far

below that permitted by standards for potable water.

2. The quantity of lead or tin extracted decreases with time. It has been proved experimentally and by analysis of samples taken from distribution systems that the total amount of stabilizer is depleted in a very short period.

3. It is considered that these PVC pipes under normal service conditions offer no risk to health for users of the potable water systems.

However, if the presence of lead in PVC pipes is not acceptable for Tunisian potable water supplies, other stabilizers such as di-n-octyl tin salts, calcium stearate or lithium stearate which are accepted internationally as nontoxic stabilizers can be used easily for food and/or domestic water supply applications.

Appendix A

CENTRAL LABORATORY OF TUNISIA TEST REPORT

REPUBLIQUE TUNISIENNE

MINISTERE DE L'ECONOMIE NATIONALE

LABORATOIRE CENTRAL

80-3

Essai N° w. 84

Suite p.

Demandeur : Georgia Institute Of Technology

Engineering Experiment station

N°= Echantillon	Intervalle de temps en (mn) et h.	DEBIT en (l/h)	Teneur en Pb en p.p.m	OBSERVATIONS
Blanc			néant	Eau de robinet passage
0	0	—	0,2	Premier passage de l'eau
1	5 mn	219	néant	dans la conduite.
2	10 mn	210	néant	
3	15 mn	360	néant	
4	30 mn	359	néant	
5	1 h	314	"	
6	1h30	380	"	
7	2h	286	"	
8	2h30	360	"	
9	3h	344	"	
10	3h30	316	"	
11	4h	381	"	
12	4h30	360	"	
13	5h	273	"	
14	5h30	360	"	
15	6h	286	"	
16	7h	316	"	
17	8h	381	"	
18	9h	360	"	
19	10h	359	"	
20	11h	344	"	
21	12h	360	"	
22	13h	316	"	
23	14h	381	"	
24	15h	344	"	
25	16h	360	"	
26	17h	350	"	
27	18h	370	"	
28	19h	381	"	
29	20h	360	"	
30	21h	344	"	
31	22h	316	"	
32	23h	359	"	
33	24h	360	"	

Remarque : La présense de plomb dans l'échantillon N°= 0 est dûe aux restes d'un dépôt de poussière à l'intérieur de la conduite.

Tunis, le 8-10-80

/_e Chef de Section

/_e Chef du Laboratoire Central

REPUBLIQUE TUNISIENNE

MINISTERE DE L'INDUSTRIE
DES MINES ET DE L'ENERGIE

Laboratoire Central

Essai N° 80.3
W. 84

demandeur : Georgia Institute Of Technology
Engineering Experiment station

Echantillons remis au Laboratoire Central le 29-9-80

Imp. S.T.A.G. - Tunis

NUMERO d'ordre	NATURE de l'échantillon	LIEUX de provenance	EMPLOI	CORPS A DOSER ou Essais à effectuer
	Tube en PVC	Tunis		plomb
	Analyse du Pb aprés passage de l'eau dans le tube PVC			

RESULTATS :

A) Teneur en plomb du matériau de la conduite (PVC) : 230 p.p.m.

B) Teneur en plomb de l'eau passant dans cette conduite d'une longueur de 85 cm.

Après passage de l'eau dans la conduite durant vingt quatre heures, avec un débit moyen de 338 l/h on a procédé à des prélèvements des échantillons comme indiqués dans le tableau ci-contre.

Appendix B

CHEMICAL STANDARDS FOR POTABLE WATER SYSTEMS

WORLD HEALTH ORGANIZATION,
INTERNATIONAL, 1963*

Substance	Recommended Limit	Acceptable Limit	Tolerance Limit
Alkyl benzene sulfonate (ABS)	0.5	1.0	. . .
Aluminum (Al)	. . . .	. . . . .	. . .
Ammonia	. . . .	. . . . .	. . .
Arsenic (As)	. . . .	. . . . .	0.05
Barium (Ba)	. . . .	. . . . .	1.0
Cadmium (Cd)	. . . .	. . . . .	0.01
Calcium (Ca)	75	200	. . .
Carbon alcohol extract (CAE)	. . . .	. . . . .	. . .
Carbon chloroform extract (CCE)	0.2	0.5	. . .
Carbon dioxide, free (CO_2)	. . . .	. . . . .	. . .
Chloride (Cl)	200	600	. . .
Chromium, hexavalent (Cr^{+6})	. . . .	. . . . .	0.05
Copper (Cu)	1.0	1.5	. . .
Cyanide (CN)	. . . .	. . . . .	0.2
Fluoride (F)	. . . .	1.0-1.5	. . .
Hardness (as $CaCO_3$)	. . . .	. . . . .	. . .
Hydrogen ion concentration (pH)	7.0-8.5	6.5-9.2	. . .
Iron (Fe)	0.3	1.0	. . .
Lead (Pb)	. . . .	. . . . .	0.05
Magnesium (Mg)	50	150	. . .
Magnesium + sodium sulfate	500	1,000	. . .
Manganese (Mn)	0.1	0.5	. . .
Nitrate (NO_3)	. . . .	45	. . .
Oxygen, dissolved (O_2)	. . . .	. . . . .	. . .
Phenolic compounds (as phenol)	0.001	0.002	
Selenium (Se)	. . . .	. . . . .	0.01
Silver (Ag)	. . . .	. . . . .	. . .
Sulfate (SO_4)	200	400	
Zinc (Zn)	5	15	. . .

*Chemical Constituents, mg/l (ppm)