AGENCY FOR INTERNATIONAL DEVELOPMENT
PPC/CDIE/DI REPORT PROCESSING FORM

ENTER INFORMATION ONLY IF NOT INCLUDED ON COVER OR TITLE PAGE OF DOCUMENT

1. Project/Subproject Number: 936-5428

2. Contract/Grant Number: DAN-5428-A-00-3047-00

3. Publication Date: 1988

4. Document Title/Translated Title:

Constructing a Punch Press for Small-Scale Manufacture of Crossflow Turbines

5. Author(s)

1. Carl N. Bielenberg
2.
3.

6. Contributing Organization(s)

Appropriate Technology International

7. Pagination: 28p.

8. Report Number:

9. Sponsoring A.I.D. Office: Bureau for Science and Technology

10. Abstract (optional - 250 word limit)

The punch press described in this paper enabled metal processors in the Eastern part of Zaire to produce commercially viable, hydro-powered grain mills. The press is a refinement of a well known, traditional technology. Today this technology is used mostly in machinery driven by air or hydraulic pressure. This press, however has been adapted for use in small scale manufacture. The technical description in this paper is not meant to be a step by step manual for production, however it can help promote discussion between the professional technician and a local producer searching for an appropriate technology.

11. Subject Keywords (optional)

1.
2. punch press
3.
4.
5.
6.

12. Supplementary Notes

13. Submitting Official: Arleen Richman

14. Telephone Number: 202-879-2903

15. Today's Date: May 6, 1988

DO NOT write below this line

16. DOCID

17. Document Disposition: DOCRD [ ] INV [ ] DUPLICATE [ ]

DRAFT FORM

PN-ABP-242

Constructing a Punch Press for Small-Scale Manufacture of Crossflow Turbines

by Carl N. Bielenberg

Editors: Arleen Richman and J. F. Swartzendruber

Copyright 1988. Appropriate Technology International, 1331 H Street, N.W., Washington D.C. 20005

This paper is the first in a series of technical publications Appropriate Technology International plans to publish in the coming two years. ATI's program and the experiences upon which these publications are based began in 1984; our philosophy rests on two criteria. First, the mandate of the Congress of the United States which created ATI called for technologies that fit the situation, resources, and skills of the poor majority in society -- farmers, village entrepreneurs, landless laborers. Second, experience has shown that if technology is to be useful to large numbers of people, it must be commercially viable and economically sustainable, even at the poorest levels of society. This criterion applies not only for the enterprise producing the equipment, but also for the users of the equipment/technology. They must be able to purchase, or be given the channels to purchase what has been produced.

Today, a number of technologies that fit these criteria have been demonstrated in ATI projects, implemented by ATI's project partners.

In areas such as the Eastern part of Zaire, people do not have access to sophisticated metal processing technologies. To produce good quality metal products, techniques need to be adapted to existing equipment and available raw materials. The punch press described in this paper was a breakthrough. It enabled SODERZA to produce commercially viable, hydro-powered grain mills.

The press is a refinement of a well known, traditional technology. Today this technology is used mostly in machinery driven by air or hydraulic pressure. Imagination and craftsmanship were needed to adjust the press to smaller, less controlled forces, i.e., human power.

Our first surveys indicate the grain mills give poor rural people access to a milling capacity not available otherwise. Reportedly, women now use the time they save by having their corn or cassava milled to sell extra produce in the market or to engage in other activities providing additional cash income.

This technical description is not intended to be a step by step manual for the production and use of a punch press. Most of the technology is transferable only by actual training and personal demonstration. We do believe this manual can help promote discussion between the professional technician and a local producer or entrepreneur searching for an appropriate technology.

For further information and assistance, please write A.T. International.

Ton de Wilde
President
Appropriate Technology International

TABLE OF CONTENTS

Applications of the Punch and Die to Small-Scale Manufacture in Developing Countries..... 1

The Design and Construction of Punches, Dies and Presses in Small Third World Workshops..... 3

The Use of a Punch Press in Small-Scale Manufacture of Crossflow Water Turbines..... 6

The Design and Construction of a Punch Press for Slotting Turbine Runner Discs..... 9

Impact of the Punch Press on Turbine Manufacture in Eastern Zaire..... 12

Figures..... 13

Photographs..... 24

Through increased productivity and profit-making small enterprises, owned and operated by local people, appropriate technology answers the challenges of rural and semi-urban development. This marriage of modern science and technology to local resources and existing skills is improving the productivity and incomes of tens of thousands of poor, but gifted people, throughout the Third World.

Appropriate Technology International (ATI) implements its mission with public funds made available by the United States Congress through the Agency for International Development. ATI's program is carried out in cooperation with the Employment and Enterprise Development Division of the Office of Rural and Institutional Development within the Bureau of Science and Technology of the Agency for International Development.

Applications of the Punch and Die to Small-Scale Manufacture in Developing Countries:

A punch is a tool, usually of hardened steel, which is forced into or through the material being worked in order to cut a piece of desired shape from that material, or to deform the material in a particular way. A die is a tool, also usually made of hardened steel, that has an opening accurately matched in shape and size to the cross section of the punch, which supports the material while it is sheared or deformed by the punch. A punch and die are thus commonly used together as a pair and are mounted in a machine, called a punch press, which is designed to apply the force needed to drive the punch into or through the work while maintaining the accurate alignment of the punch and the die. The location of a punch and die in a typical power punch press is shown in figure (1), page 13.

Punches and dies can be made to perform a number of different functions and are named accordingly. The most obvious use is to produce holes in the workpiece, which is formally called piercing. Piercing has several important advantages over drilling: first, it is much faster, and second, it can produce square and other odd-shaped holes. A much larger number of holes can be produced by piercing than by drilling before tool resharpening is required, and far less energy is required to pierce holes than to drill them. Using a manually operated punch press, it is possible to pierce holes through mild steel more than one centimeter thick.

In developing countries in the Third World, a piercing punch and die that can gang punch large numbers of round holes in sheet steel can be used to produce steel sieves for crop cleaning and sizing equipment, hammer mill screens, gravel sizing drums, and deep well sieves. Where the work is less than a few millimeters thick and the holes are less than a few millimeters in diameter, a dozen or more holes may be gang punched in a row on a manually operated punch press and the work indexed from one row to the next by pins manually inserted into the row previously pierced. Hydraulic and motorized punch presses may be specially designed to punch a row of holes that span the entire width of the sheet. Here the major challenge lies in building a punch and die that are precise and rigid enough to line up over their entire length.

The production of square and square-countersunk holes is necessary in the manufacture of plows, cultivators, and other farm implements where square shanked plow or carriage bolts are used to prevent loosening of the working parts. A square hole is easily punched with a manually operated press through mild steel one centimeter thick, although the countersinking requires greater force and may best be done in a small shop where the workpiece is heated on a forge.

In the same way that a punch and die may be used to pierce a hole in the workpiece, they may be used to cut out a wholly or partially finished workpiece from a sheet of raw material. This process, in which the punch has the same cross section as the plan of the part to be produced, is called blanking. Washers are produced by a combination of blanking and piercing dies. Parts which are made by blanking and piercing may be blanked and pierced with one die or, to reduce the working force of the press and simplify punch and die design, may be worked in several operations. A die which serves no other function than to blank a part is called a 'single' die, while a 'double' die serves both functions. In using a double die, the stock is first pierced and then moved under the blanking side of the die, where tapered guide pins on the end of the blanking punch accurately locate the stock through the pierced holes as the punch begins its descent. Since the stock is in the form of a continuous strip, only slightly wider than the part, a portion of it is pierced at the same time that the already pierced portion is blanked. This is illustrated in figure (2), page 14.

In addition to piercing and blanking, the production of a sheet steel part or product often requires the blank to be bent or deformed in some way. An example, illustrated in figure (3), page 15, is the production of hinges by piercing, blanking, and curling. Hinges, hasps, and other imported building hardware can be easily manufactured by local small workshops.

Sheet steel is often indented to produce the working surfaces of a wide variety of food processing equipment used in developing countries. Arabica coffee is hulled or 'pulped' by rubbing the fresh beans against a drum or disc covered with sheet steel formed by indentation. The punch shears through the sheet on one side of the punch, forming a small pocket as shown in figure (4), page 16. To be practical, the punch should be ganged so that a row of indentations, spanning the entire width of the sheet, can be made simultaneously. The advance of the sheet through the press is then indexed with respect to a previous row of indentations as is done in manufacturing perforated sheets. Surfaces prepared in this way can be used for grating tubercules, and are used on drums which size or classify rice. They wear during use and need to be replaced frequently.

In Cameroon, artisans in a number of small workshops and in one larger firm, already are using forming dies and presses designed and built to produce a variety of sheet steel products. Several small shops in Bafoussam and Bamenda press the blades of hand hoes and shovels from 1.5 mm thick mild steel, emulating the products and methods of Tropic, Cameroon's large agricultural equipment manufacturer. Unfortunately, the artisans are generally unable to obtain the harder, longer wearing medium carbon steel imported by Tropic for its shovel and hoe manufacture. Barnabus Anguh, who manufactures coffee pulpers in Bamenda, had developed his own punch and die set for indenting the pulping surface. This device, mounted on a conventional hydraulic shop press, is zealously protected from the prying eyes

of would-be competitors. Finally, Anguh and a number of other small producers have developed forming dies for wheelbarrow bodies. Only Anguh produces drawn bodies; bodies in the other shops are made from sheet which is cut and folded, rather than drawn into the final shape.

Drawing is the process of forming deep three dimensional objects from sheet steel blanks using a punch and die. Sheet steel and aluminum pots, pans, and bowls often are made using this method. Drawing requires the periphery of the blank to be clamped between the top face of the die and a 'blank holder', which surrounds the punch, while the punch descends into the die, which is made about two blank thicknesses larger in diameter than the punch itself. The clearance between the punch and the die enables the blank to be drawn into the die, thereby assuming a cup shape without wrinkling or tearing. Successful drawing of deep 'shells', as the drawn objects are called, requires that the punch and die be very well polished and hardened, to prevent sticking and tearing of the blank. This is usually performed in several stages -- a deeper set of punches and dies is used in each successive stage. Furthermore, it requires a powerful press, since the yield stress of the material being drawn must be maintained around the entire circumference of the blank and through a significant displacement of the ram. The drawing of wheelbarrow bodies would require a press with a capacity of approximately 100 tons and a displacement of at least eight inches (20 cm). This press would require a considerable investment -- justifiable only if the product is intended for a large national market. On the other hand, drawing smaller shallow objects like plates, fry pans, and the basins of poultry waterers, is extremely straightforward and well within the capacity of small shops.

In some respects, forging is similar to the piercing, blanking, and forming described above. However, it is distinguished because a block or billet of steel, rather than a sheet, is used as the raw material. Consequently, in forging the yield stress of the material must be obtained across the entire surface of the die, rather than only along the edge of the punch. The forces involved in forging are thus much higher. Although the forces can be reduced by heating the work to the detriment of the strength and hardness of the forged part, forging in small shops is necessarily performed by a power or manual hammer, unlike the presses used in forming sheet steel. Construction and use of power hammers and simple dies will improve the productivity of traditional blacksmiths, but is beyond the scope of this paper.

The Design and Construction of Punches, Dies and Presses in Small Third World Workshops:

The problems involved in the fabrication of punches and dies and the construction of a press for a particular application are highly specific to that application. Nonetheless, certain general rules apply:

i. The clearance between the punch and the die, where the punch enters the die, must be minimized. A clearance of one tenth of the sheet thickness is about the maximum desirable for piercing and blanking punches and dies. Below the cutting edge, the opening in the die should taper outward up to 5°, to enable the slug or blank to fall out of the die.

ii. Because of the above, the punch press must be extremely rigid, and the play in the ram, or the descending part of the press to which the punch is attached, must be minimized. The ram is typically mounted in adjustable 'V' ways.

iii. The punch and die must be made of high carbon steel, and must be hardened and tempered. An exception to this rule is when blanks are punched from thin sheets; then it is often possible to leave the punch slightly soft. By peening and thereby enlarging, or 'upsetting', the end of a soft punch that has worn, and then forcing the punch through the die, the punch can be restored to perform as if it were new.

iv. Where possible, the face of the punch or die should be ground to a curve, or, in the case of multiple punches, to slightly different lengths, so that the cutting is progressive. This should be done in such a way that the forces on the ram are balanced; that is, they do not push the ram sideways.

v. The punch and die, or the work, should be lubricated.

vi. The punch and die should be polished to be very smooth, and their cutting edges should be kept as sharp as possible. Smoothness is particularly important in drawing, where the high contact forces between the work and the punch and die, and their relative motion, can cause friction, sticking and tearing of the work, and rapid wear of the punch and die.

The use of hardenable steel for the punches and dies does not preclude its application by small manufacturers in countries where such materials are not commercially available. A number of readily available scrap materials are well adapted to the fabrication of punches and dies. These include leaf springs, torsion springs, halfshafts, valves, wrist pins, and bearing races from cars and trucks, and railway scrap, including axles, springs, and rails for larger work. Most of these materials can be machined or filed when annealed by heating in a forge and immersion in wood ashes.

It is advantageous to utilize hardened automotive parts that most closely resemble the shape and size of the punch and die to be produced, and to work the parts by grinding rather than by annealing and machining, since the original hardness and temper of these parts can usually be retained. Bearing races and wrist pins, valves and valve stems are usually available in sizes

enabling a large range of circular hole punches and dies to be made. The grinding can be performed by mounting the part in a lathe, and grinding it with a mounted toolpost. In a pinch grinding can be done by a hand-held orbital grinder while the part is rotated.

The fairly high precision required in making punches and dies does not preclude the adoption of this technology by small workshops. In the latter half of the nineteenth century in the West, punches and dies usually were made by hand filing and visual inspection. Patterns called templets were used to compare the shape and size of the punch and the die with the blank to be produced. The patterns were useful because, being made of a fairly thin soft sheet metal, like brass or aluminum, they could be easily filed to the correct size and shape, were easy to handle for frequent checking of the progress made in filing the punch and die, and would not scratch the punch or die. Material was removed from the inside of the die, where the punch and blank pass, by drilling numerous holes, closely spaced, within an outline scratched in the face of the die using the female templet. The hole then was filed from the lower side of the die, so that the lower side should be slightly larger than the top or cutting side. Then the male templet was inserted into the die from the back and used to determine which surfaces of the hole needed further filing. The die was finished by inserting the male templet within it and placing a well-illuminated sheet of white paper behind the two. When the remaining tight spots were filed or scraped off, the die was hardened and its face ground smooth. Then the punch was filed roughly to shape, but slightly oversize; its end was beveled, and it was forced through the die on the press, and hardened and ground last.

Punch presses were typically built with a heavy 'U'-shaped cast iron frame, adjustable 'V' ways for guiding the ram, and a drive system consisting of a motor, belt driven flywheel, automatic clutch for one-cycle operation, a crankshaft, and a connecting rod, as shown in figure (1), page 13. A number of simpler designs, which can more easily be constructed and operated by small shops in developing countries, are possible. The final choice among the drive systems, ram guides, and frame structures suggested in figure (6), pages 18 - 19, will depend upon the kind of work the press must perform. A specialized press, capable of performing only a single kind of operation, is easier to design, and simpler and less costly to build, than one which is more versatile.

Using punches and dies in manufacturing usually reduces the amount of labor involved. Although this effect appears inconsistent with the resource endowment of most developing countries, there is in fact, in these countries, a shortage of highly skilled metal workers who can produce high quality equipment and tools without recourse to jigs and fixtures, punches and dies, and other quality assurance techniques. Lowering the necessary ratio of skilled to unskilled labor thereby increases the volume and scope of manufacturing possible

with a limited number of skilled workers. Punches and dies have played an important role in reducing the cost and improving the quality of manufactured goods.

In mentioning specific applications for punches and dies in small scale manufacture, I have intentionally excluded examples, like bicycle manufacture, where most of the work is done by punch presses, but where the complexity of the manufacture and the enormity of the market preclude its being done on a small scale. The production of specialized vehicles, like three-wheeled vending bicycles, wheelchairs, and pushcarts, which utilize the same technology, but constitute a market too small to interest potential exporters, may, however, be a feasible area for small scale manufacture. Punches and dies can have the greatest positive effect on small-scale manufacture where:

i. they enable the production of a simple product that enjoys a large market as, for example, hinges; or

ii. they enable a certain process in the manufacture of a more complex product to be performed efficiently, where this process would otherwise limit the productivity and/or the quality of the manufacture as a whole, as in the coffee pulper and the crossflow turbine.

Readers who are interested in obtaining further information on the application of punches and dies are referred to Dies, Their Construction and Use for the Modern Working of Sheet Metals, by Lindsay Publications, Inc., Bradley, IL 60915.

The Use of a Punch Press in Small-Scale Manufacture of Crossflow Water Turbines

The crossflow water turbine is one of several different types of turbine utilized for converting water power into mechanical (shaft) or, via a generator, electrical energy. It has been found to be particularly well adapted to small scale manufacture in developing countries. Originally developed in 1903 by an Australian engineer, A.G.M. Michell, the crossflow turbine has a number of advantages when applied to small waterpower sites:

i. Like the Francis turbine, the crossflow can be applied to a wide range of heads, from approximately 5 to 50 meters. Outside this range the propeller or Kaplan turbine and Pelton wheel tend to be more efficient and/or economical. Unlike the Francis turbine, a single crossflow design can also be applied over a fairly wide range of flows by simply changing the length of the turbine parts. The crossflow is thus better adapted to small scale manufacture where, it would not be economical to produce many different models of turbine.

ii. The crossflow turbine does not require a pressure casing, since the water pressure inside the turbine is

contained entirely within a single admission jet and the runner. Thus, far less steel is used in producing a crossflow turbine.

iii. The crossflow turbine produces no axial thrust on its shaft.

iv. The shaft of the crossflow turbine is mounted horizontally, which is the most convenient orientation for powering the majority of belt-driven machines.

Since 1930, the crossflow turbine has been manufactured by the Ossberger Company in West Germany for waterpower installations of from 5 to 2,000 horsepower and heads of 4 to 650 feet (1.25 to 200 meters). Its versatility and simple construction motivated a firm in Nepal, Balaju Yantra Shala (BYS), to design and test a small prototype turbine, supported by the Swiss Association for Technical Assistance (SATA). This led a number of small manufacturers in Nepal, a country with a long tradition of water powered grain milling, to construct and install several hundred crossflow turbines.

In 1985, Appropriate Technology International sponsored a project initiated by a private development company in Bukavu, eastern Zaire, to introduce water powered cereal mills based upon the crossflow turbine developed in Nepal. Small scale medium head water power sites were abundant in the region surrounding Lake Kivu and rural milling facilities were scarce. Although the Societe de Developpement Rural au Zaire (SODERZA) was relatively new, it had already built and tested water powered stone mills of the traditional Nepalese design and two crossflow powered hammermills.

The author visited SODERZA in November, 1986, in order to assess the Company's progress in turbine production and installation, and to provide technical assistance. Although the Company had installed and was operating two new mills, and had almost completed a third, its major achievements were the training of site survey and installation teams, and the assembly of competent and dedicated workshop staff. Soheyl Mottahedeh, a Canadian engineer who directed the project, had also made some innovations in the design of the Nepalese type T3 crossflow turbine, and had designed several hammermills based upon available steel scrap.

The T3 crossflow turbine consists of essentially three parts: the jet, which is attached to the penstock and accelerates the incoming water as it directs it tangentially against the runner; the housing, which serves as a support for the jet and runner bearings, and contains stray water thrown off by the rotating runner; and the runner itself. These components are illustrated in the cross sectional drawing, figure (7), page 20, and the photographs of the turbine, page 25.

In its effort to produce the turbine, SODERZA experienced problems in slotting the discs which are welded to the runner shaft and support the blades. Initially this was done by drilling hundreds of holes in close proximity to the location of slots and then cutting out and filing away the material between these holes. This method not only required approximately two man-days of labor per disc, or up to two weeks per turbine, but resulted in non-uniform slot width and spacing. Consequently, the runner blades did not fit snugly into the disks. The poor fit made it difficult to weld the runner blades to the discs. Both the strength of the runner and its efficiency were reduced since the roughness and unnecessarily large section of the weld beads would cause turbulence and impede the flow of water through the runner. The weakness of the runner was, however, our major concern. The turbine blades are made from sheet steel 2.5 to 3.5 mm thick. Since the blades are subjected to the force of the water intermittently, rather than constantly as in a Francis or Kaplan turbine, they are susceptible to fatigue failure. Furthermore, only a few blades must bear the entire force at any moment, since the majority of the blades are outside of the 'S'-shaped stream of water which traverses the runner. In fact, the 'S'-shaped stream is an idealization of the actual flow. Most of the kinetic energy and pressure of the water leaving the jet are imparted to the blades in front of the jet, while only a small portion of the kinetic energy and none of the pressure act on the blades on the exit side of the runner.

In addition to increasing the strength and efficiency of the turbine, and reducing the labor requirements, a better method for slotting the discs would also reduce SODERZA's expenditure for hacksaw blades and files, estimated at more than $20.00 per set of discs. By mechanizing the slotting process, SODERZA could reduce both its overhead and the sales price of the turbine. In November, 1986, the turbine price was comparable to the price of a Lister diesel engine purchased in Kinshasa. Furthermore, the slotting method used by SODERZA was, according to the workers, the most onerous task in the production of a turbine mill set.

Manufacturers in Nepal have avoided manual slotting of the discs in two different ways. BYS has slotted its discs by milling, using a vertical or universal milling machine, and by oxy-acetylene torch. Milling cannot produce slots less than 4 mm wide, which is the diameter of the end mill employed; is extremely slow; and requires a very costly machine tool and skilled operator. No data is available on the time required to produce a set of discs or the total production cost, but this method would never be used in actual manufacture except, perhaps, to build a prototype. The oxy-acetylene torch method is feasible--using either a template guided or photo-optically controlled flame cutter or a hand held torch, worked by an extremely skilled operator. Other firms have avoided slotting the discs altogether by cutting the blades in short sections and buttwelding the sections individually to the discs. Stress analysis of the blade, and operating experience in Nepal indicate

that turbines built by this method, with discontinuous blades, are not as strong as turbines with carefully slotted discs and continuous blades.

We set out to design and build a punch press that would be capable of slotting the turbine runner discs. In addition, a press with the appropriate dies could be used to bend the turbine blades to the correct circular arc.

The Design and Construction of a Punch Press for Slotting Turbine Runner Discs

Designing and building a punch press that could slot the turbine runner discs were not inherently difficult, but required some resourcefulness, given the very limited availability of raw materials in Bukavu, the rudimentary and worn-out equipment in SODERZA's workshop, and the short duration of my visit. Although SODERZA had obtained a small stock of cold rolled shafting and steel sheet use in the construction of turbines and hammermills, no heavy gauge mild steel plate was available, except what could be salvaged from scrap. The 20 mm thick plate used in the frame of the press was cut from the chassis of a ruined fork lift truck. Several scrap materials, including automotive leaf springs, half shaft (rear axle), and bearing races were considered for the punch and die. A thorough search of the scrap dealers' market in Bukavu yielded races of a suitable diameter although they needed some grinding and machining to conform to the exact dimensions and to produce sharp cutting edges. SODERZA's equipment included one lathe with no tailstock, a power hacksaw in barely operable condition, a small drill press, bench and orbital grinder, bench vises, and an incomplete array of drills, taps, and small tools.

Normally the ram of a punch press is accurately located by a pair of adjustable 'V' ways to prevent rotation or any other motion of the punch relative to the die except for its vertical translation. However, the circular section of the slots in the turbine runner discs suggested the use of a simpler ram consisting of a steel shaft which would slide up and down and be free to rotate. The center of this shaft must coincide with the center of curvature of the slot to be punched. By rotating the ram slightly between successive strokes of the press, a single slot can be cut in several strokes, thereby reducing the effort required to operate the press. Because the discs are of fairly thick, i.e. 4 mm, mild steel sheet, and the press was to be manually operated; this was an important consideration. The ram of the prototype press is made from 50 mm diameter cold rolled and shafting and is guided by a 100 mm long bronze bushing, which is turned to a close fit (+.05 mm, -.00 mm) on the shaft after the bushing is pressed into the heavy wall steel sleeve that secures it to the press frame. Experience with the prototype has shown that the length of the sleeve should be increased to at least 150 mm and that a pair of replaceable bushings, fitted into either end of the sleeve, should be used instead of the single long bushing. The latter was inadvertently tapered as a result

of the imprecision of SODERZA's lathe. Using the chrome plated shaft of a hydraulic cylinder instead of the cold rolling shafting used in the prototype would further improve the precision and wear resistance of the press.

The lower end of the ram of the punch press is bored out of a diameter of 25 mm and a depth of 100 mm to accommodate the stem of a presser foot that prevents the turbine runner discs from deforming during the slotting operation. The volume above the top of the presser foot stem contains discs of inner tube rubber which act as a stiff spring that applies force to the presser foot while acting as a return spring for the ram. This device is similar to the 'stripper' in a conventional punch press, which holds down the blank or workpiece while the punch is retracted from the die.

Of the several manually operated mechanisms that could have been used to lower the ram, an eccentric cam was chosen because it was simplest and most quickly made. The device consists of a 110 mm long piece of steel shafting, at least 35 mm in diameter; both ends are turned down eccentrically on the same axis to a diameter of 20 mm. An eccentricity of 7 mm will result in a ram travel of 14 mm as the eccentric shaft is rotated through 180°. Two ball bearings with an inside diameter of 35 mm are pressed onto one end of the central portion of the shaft after the hand lever is welded at the other side. The handle should be positioned so that it is horizontal when the central section of the eccentric shaft is 45° above bottom dead center; the stroke is completed with the handle 45° below its horizontal position. The eccentric shaft is then mounted to the ram support sleeve between two brackets so that, when facing the press from in front, the bearings contact the left hand top surface of the ram. The bearings are off-center; thus the force they apply to the ram is aligned with the off-center position of the punch.

The punch used in the prototype is a 90° section of a high carbon steel shell bearing held in a pocket welded to the side of the lower end of the ram, as shown on page 27. After using the punch press for some time, SODERZA found that the punch tended to become loose and misaligned. Consequently SODERZA produced a new punch from a complete shell bearing retained by a ring that goes entirely around the lower end of the ram. The shell bearing used for the punch has an inside diameter of 62 mm, equal to the inside diameter of the slot to be produced, but an outside diameter slightly larger than required for the punch. The outside diameter was reduced by pressing the bearing onto a mandrel, mounted between centers on the lathe, and grinding the bearing with an orbital grinder clamped to the tool post, while the bearing was rotated and water cooled. The end of the bearing which will become the cutting edge of the punch only needs to be reduced to a depth equal to the stroke of the punch. If a bearing race which was too small on the inside diameter were found, it could be enlarged by internal grinding in a similar manner. The punch is secured to the ram by several set screws of 8 mm diameter, after its cutting edge is ground to the profile

shown in the blueprints, figure (8b), page 22 (punch detail, top of the page).

The die used in the prototype consists of two separate pieces corresponding in diameter to the inside and outside edges of the punch. The inner portion is made from the outer race of a ball bearing having an outside diameter of 62 mm, which is a common size. Using the lathe and orbital grinder, one face of the race is ground flat to remove the bevel on its outside edge as described for the punch above. The outer portion of the die was made from the forged cap of a large connecting rod. The diameter of the cap had to be significantly increased; this required that it be annealed, turned inside, and rehardened. Although the cutting edge and the first few millimeters below the cutting edge were turned to 70 mm, equal to the outside diameter of the punch plus 0.5 mm clearance, the remainder of the inside surface was enlarged to 72 mm to enable the slugs to fall through the die.

A simpler and better way to construct the die is shown in the blueprint, figure (8b), page 22 (die detail, bottom of the page). Nonetheless, this depends upon finding a bearing race having an inside diameter of 70 mm. The connecting rod cap is replaced by this bearing race, which is held inside a retaining ring and secured with set screws. The inner bearing race is pressed onto a mild steel plug which is in turn bolted to the die support, so that both parts of the die may be easily removed for resharpening, or rotated to present a new cutting edge to the punch. The cutting faces of both die parts are ground flat, and one or the other of the races must be ground to a taper enabling the slugs to fall out.

The profile of the punch causes it to begin cutting the slot from the outside of the turbine runner disc. This method requires less force than if the punch were to begin the slot from the inside. The slot is only partially cut on the first stroke of the press; then the ram is rotated slightly and another stroke is taken. The operator controls the rotation of the ram by a handle welded to the lower end of the ram which is held in his left hand. With his right arm he pulls the lever which drives the ram. The rotation of the ram, and consequently the length of the slots, is limited by a stop. This consists of an arm welded to the lower end of the ram and threaded for a bolt at its other extremity. The bolt is adjusted and secured with a lock nut so that it contacts the frame of the press when the punch has completed a slot.

The correct spacing of the slots around the turbine runner disc is obtained by using an automotive transmission gear as a divider. A wedge which slides in a bracket welded to the base of the press fits between adjacent teeth on the gear and locks it in position. The turbine runner disc is bolted to a hub that is in turn attached to this gear, and cannot turn with respect to the gear while the disc is being slotted. Because we were unable to find a gear with the proper diameter and number of teeth, we were

forced to use a gear that had twice as many teeth as there are slots in the disc. The press operator must be careful to advance the disc two teeth rather than one between slots.

The small diameter of the T3 turbine runner (200 mm) places the axis of the ram only 74 mm from the axis of the dividing gear and turbine runner disc. The base of the die support must be cut away to provide clearance for the indexing gear, which should be at least 100 mm in diameter if it is to accurately locate the disc. Welding the die support to the base and upright of the press is recommended to maintain its rigidity, although this will prevent removal of the indexing gear if the indexing shaft is not removable. Removal of the gear and hub should not, however, be necessary.

Impact of the punch Press on Turbine Manufacture in Eastern Zaire

The punch press was completed and tested in November 1986 and has been functioning - with minor modifications - for the last year. These modifications include the addition of a bearing to reduce the effort of pulling down the lever, and strengthening the dies to provide a longer service life.

The task of producing one disc has been reduced from two days of very difficult and monotonous labor to less than one hour of relatively easy work. The quality of discs has dramatically improved, with the disc remaining flat and the slots equally spaced and of uniform 4mm width. Fitting the 3.5mm blades into the slots and welding them onto the discs is much easier, leading to a finished turbine runner of much higher precision and strength. SODERZA estimates that the use of the punch press saves an average of two person - weeks of labor per turbine, as well as reducing the need for scarce hacksaw blades and drill bits.

By annealing the turbine blades before forming them in a simple hammer die, a smoother and stronger blade now is produced without the distortions that had been common in the past. The improvement in the blades as well as the disks, and the neater welding that results, have produced a turbine estimated to be 30 to 35% more efficient and significantly stronger than the early SODERZA products, at less cost.

Other components of the turbine-driven mills can advantageously be produced with punches and dies. The hammers of the mill which number 1,600 per mill, are usually made from medium carbon steel, and are easily pierced and bent by using a simple punch and die on a manually operated press. The fine and coarse screens of the mill can be perforated on a punch press in which a number of punches are ganged to produce several holes, or an entire row of holes, simultaneously. In large scale manufacture, although the majority of sheet steel parts of the turbine and mill would be blanked and pierced on punch presses, this cannot be justified on a small scale.

Figure (1) : A typical small punch press

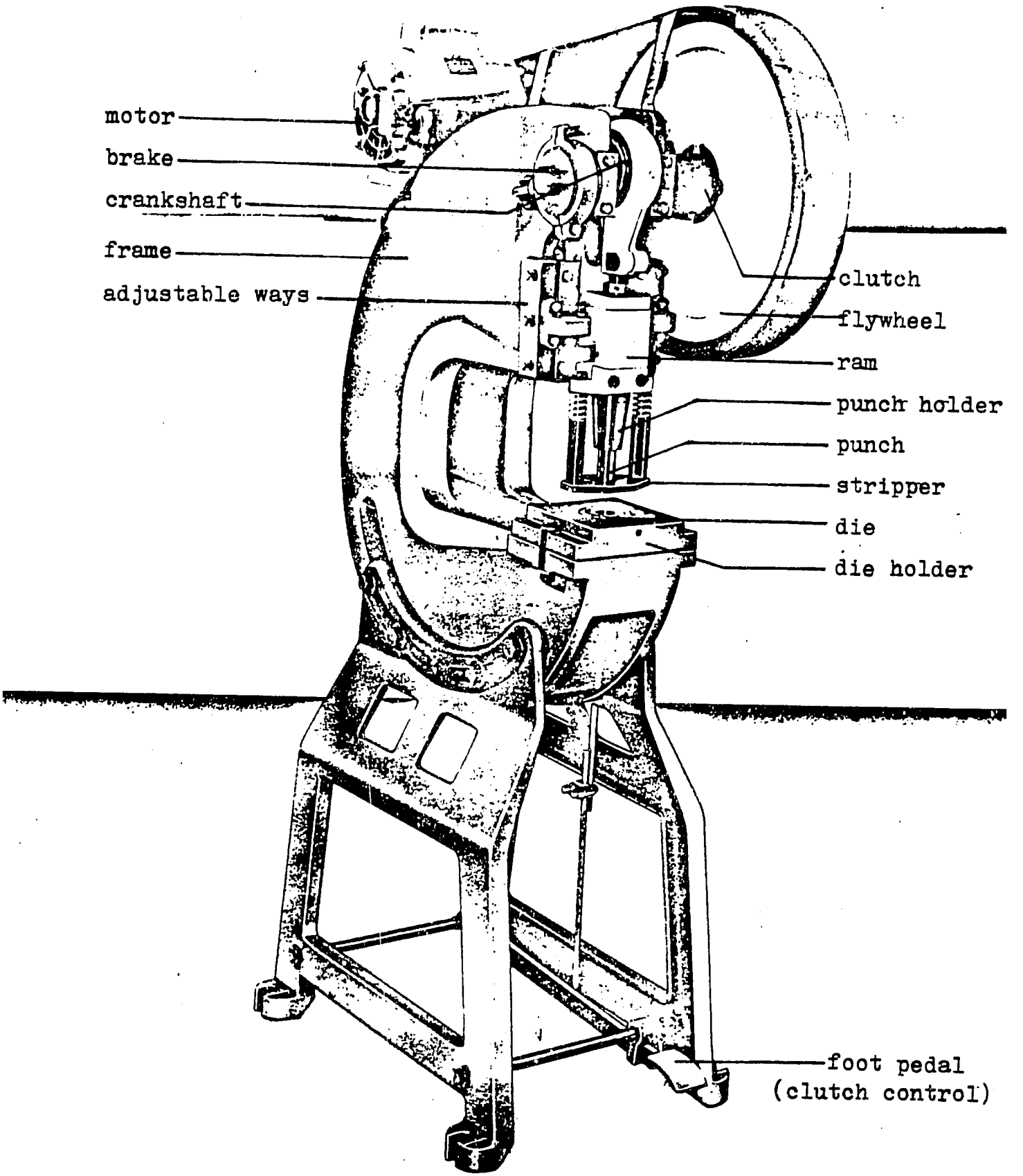

Figure (2) : Operation of a double punch for piercing and blanking a simple part

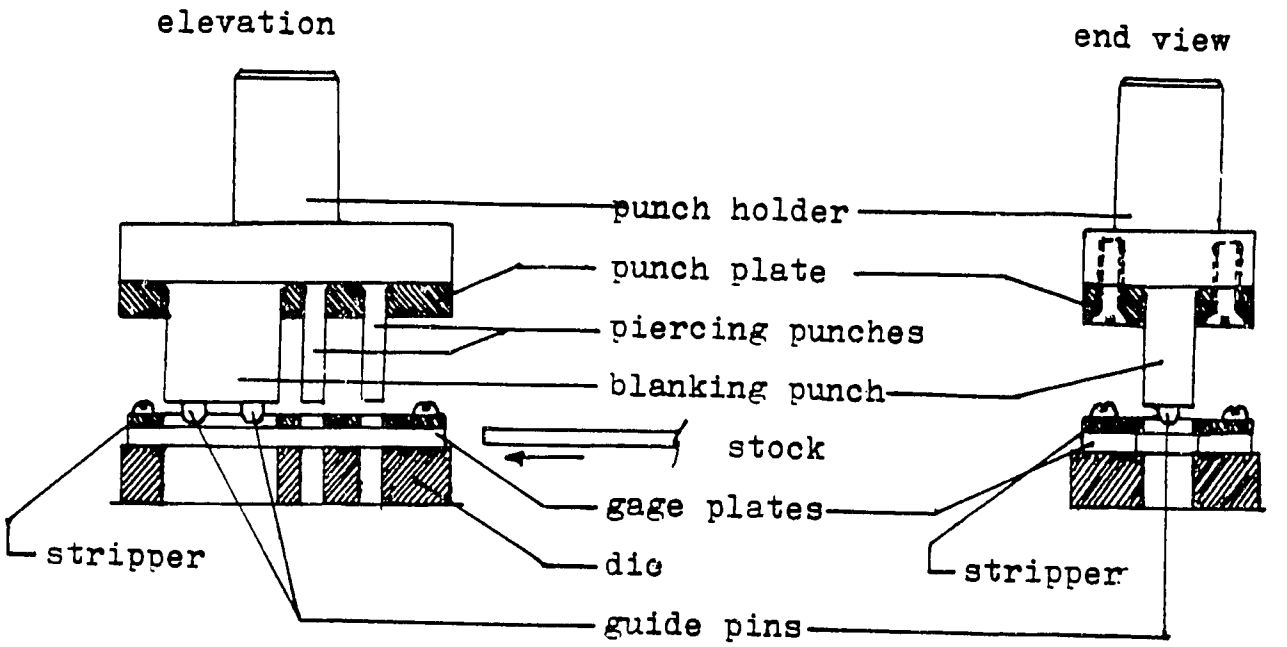

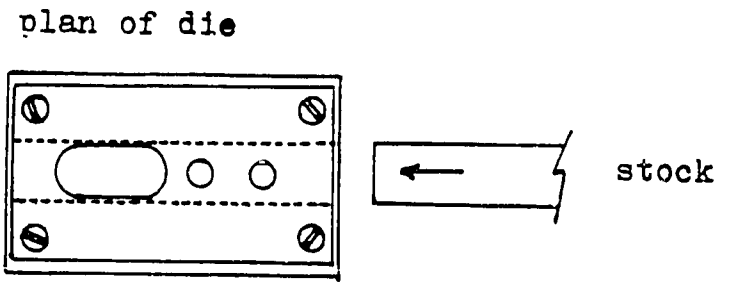

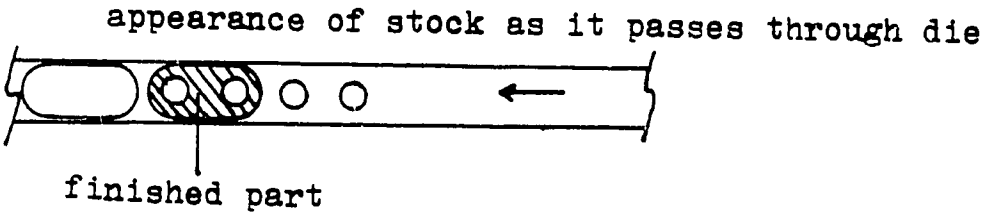

Figure (3) : Dies for curling a hinge

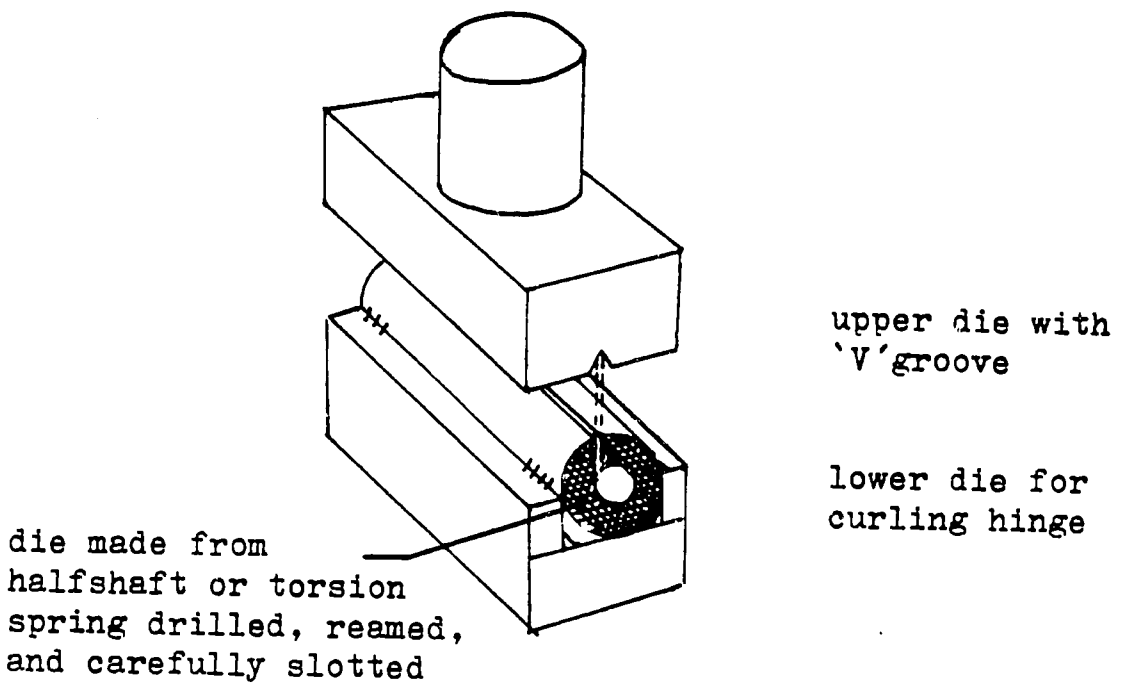

curling process:

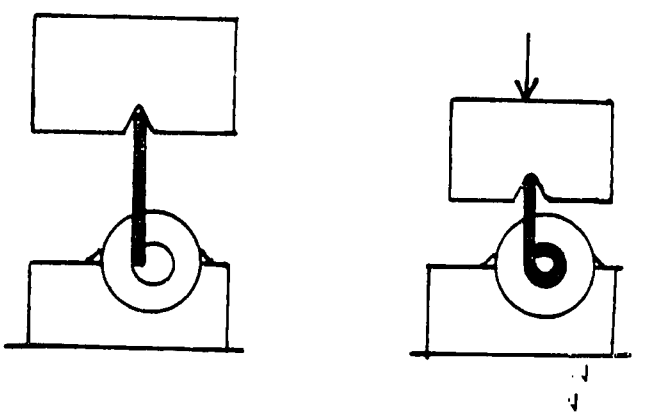

finished hinge half:

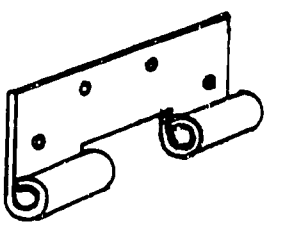

Figure (4) : Small-scale production of indented or perforated sheet

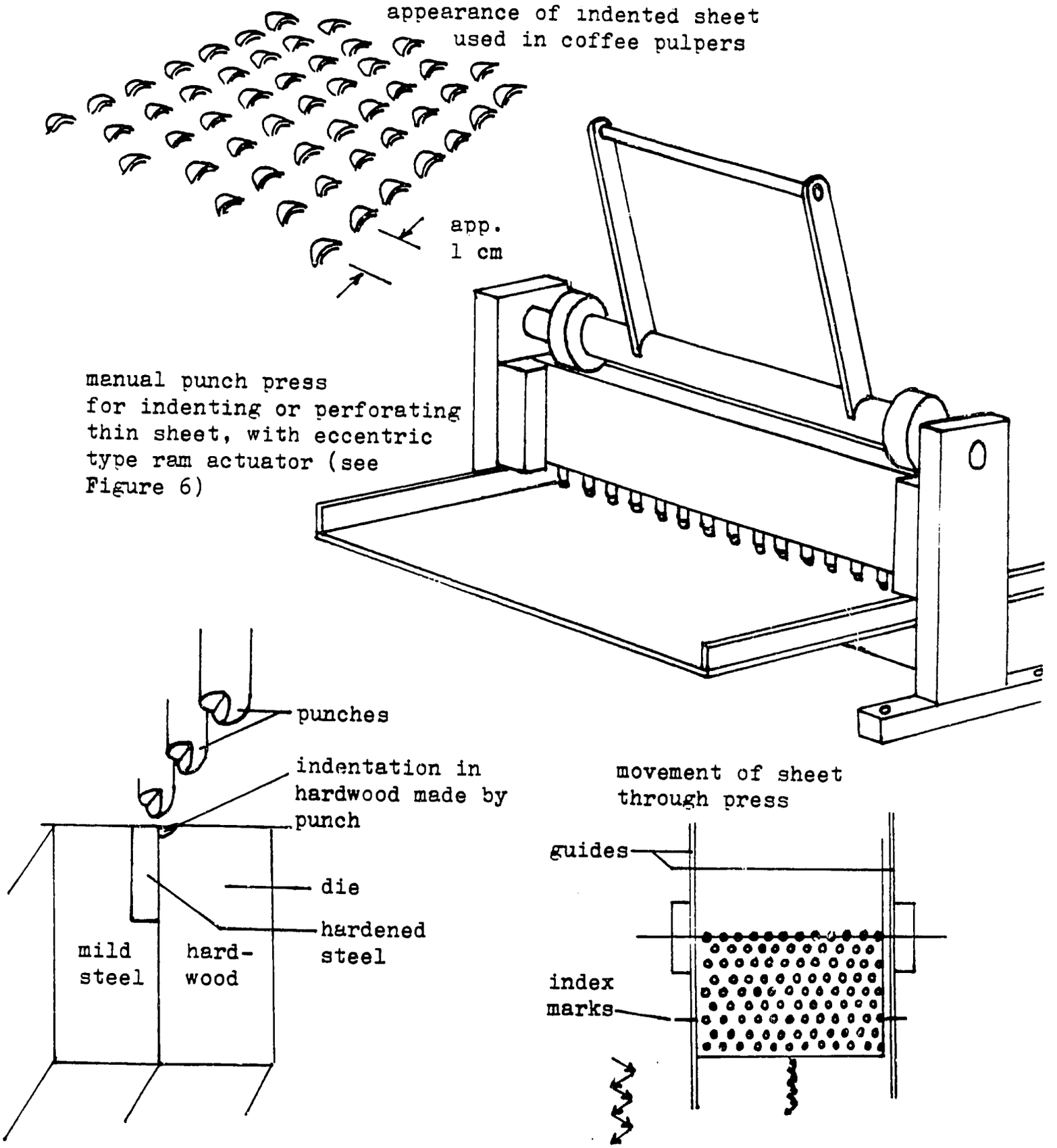

Figure (5) : Manually operated ram drive mechanisms

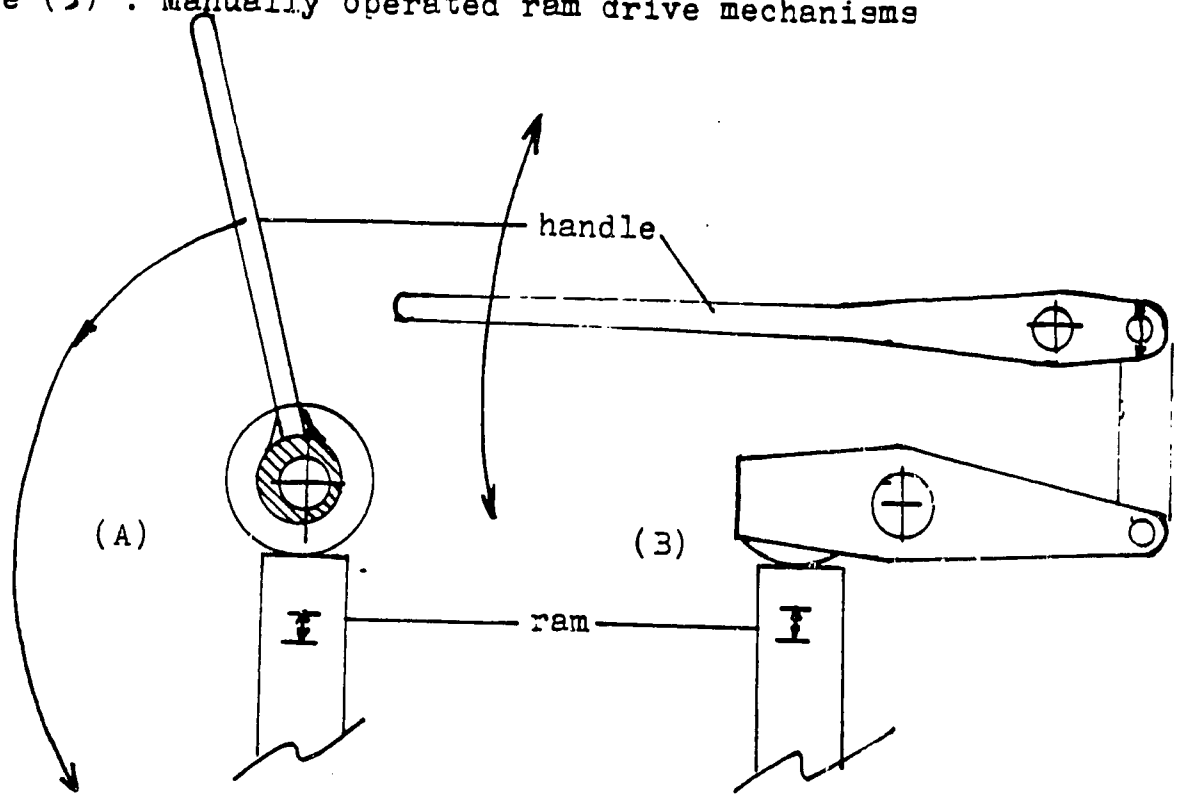

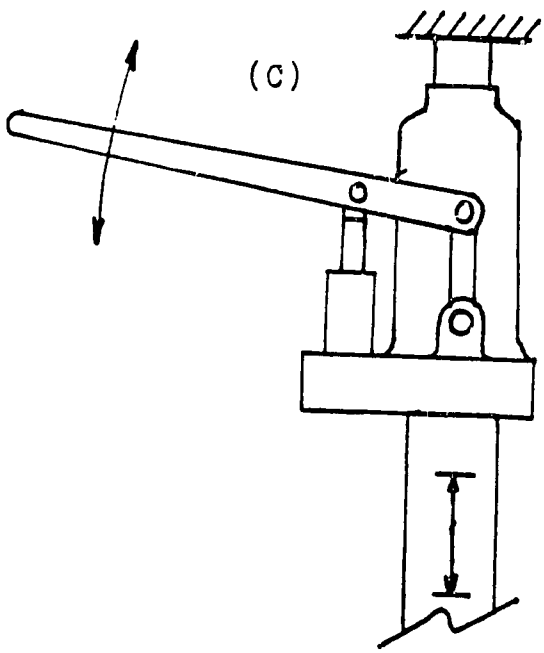

(A) eccentric or crank operated
(B) double lever operated
(C) hydraulic jack operated

N.B.: hydraulic jack provides more displacement than other drives, better for deep forming and drawing

Figure (6) : Simple press for small blanks

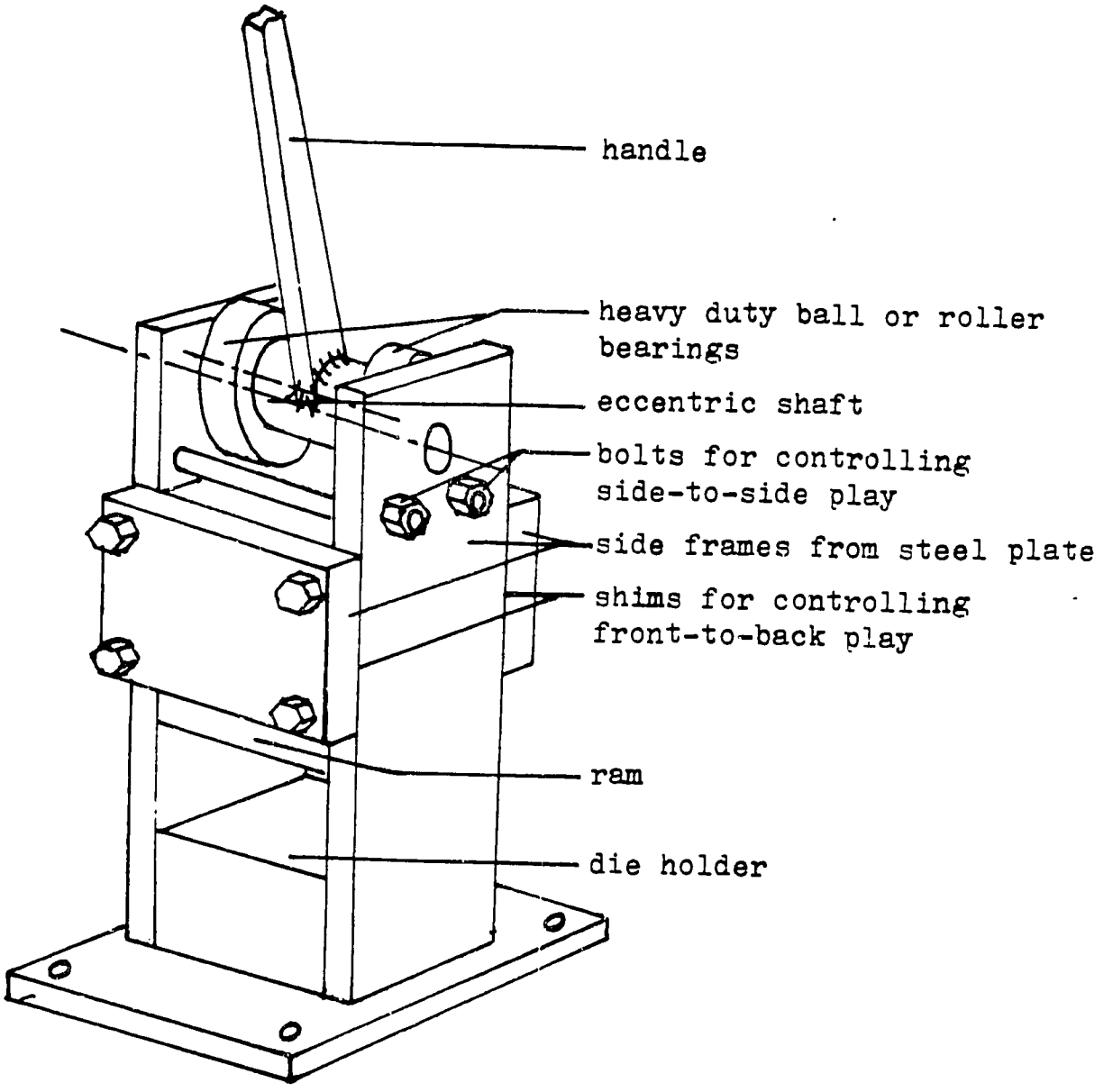

Figure (6) cont. : Fabricated 'U'- type press frame, ram guide

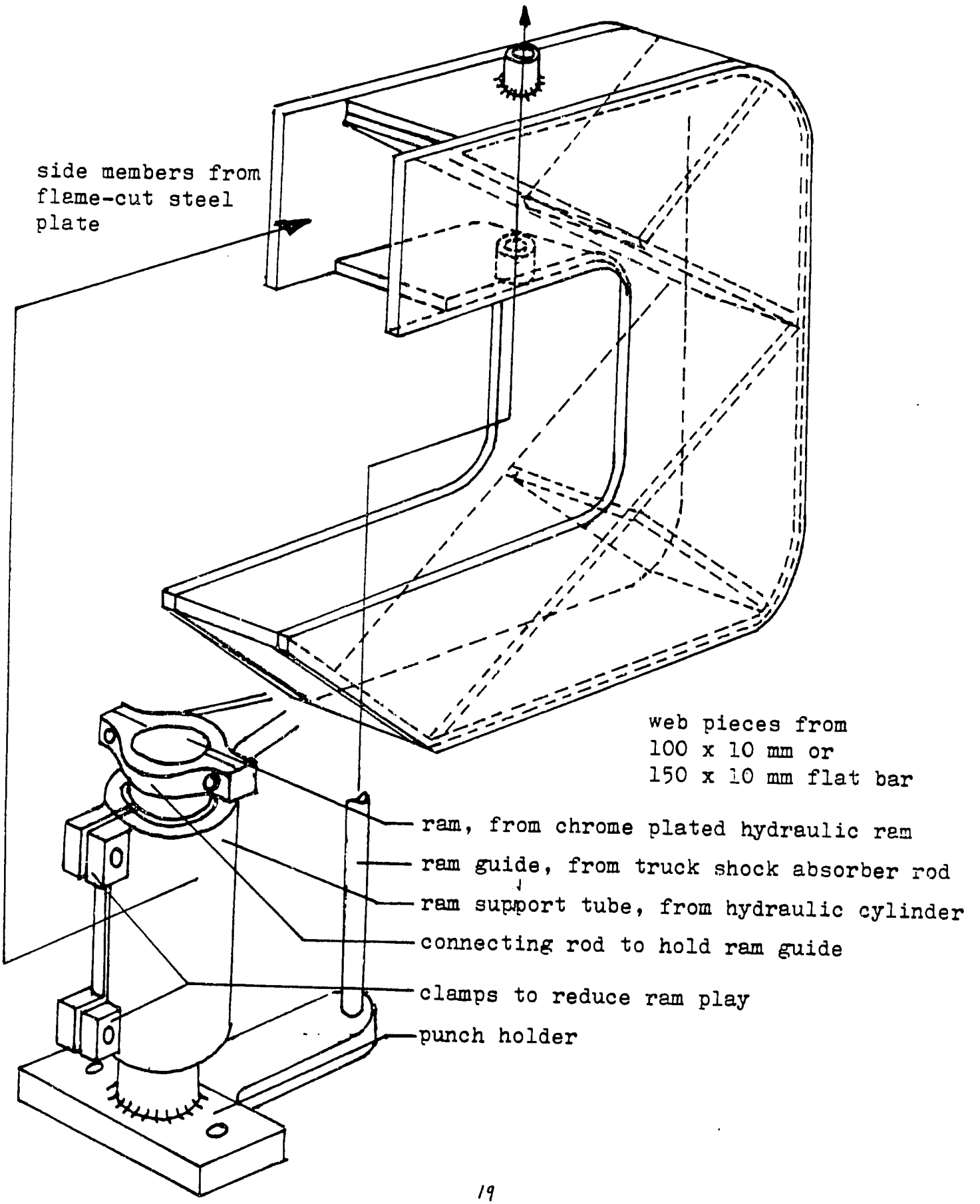

Figure (7) : The T3 type crossflow turbine designed in Nepal and introduced to Eastern Zaire by the SODERZA-ATI rural milling project

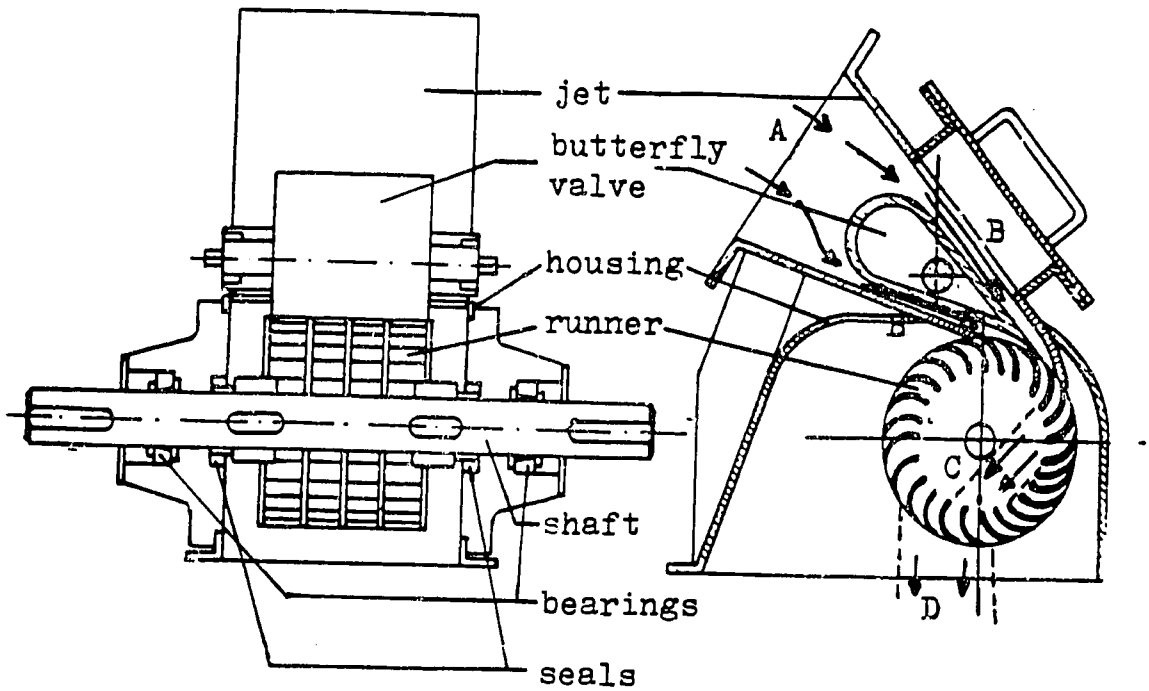

The operation of the turbine is explained by the side view illustration at right, above. Water under pressure enters the jet of the turbine from the penstock at (A). In passing through the narrow channels between the butterfly valve and the walls of the jet at (B), its velocity is made to increase as its pressure drops. The water then impinges upon and is deflected by the blades of the runner, causing it to rotate. Some of the water crosses the interior of the runner at (C) and is deflected a second time as it exits the runner, imparting more energy to it. The length of the arrows in the illustration indicates the relative velocity of the water at different points in the turbine.

The illustration above is taken from SODERZA's prospectus for turbine driven hammermills.

PUNCH PRESS,

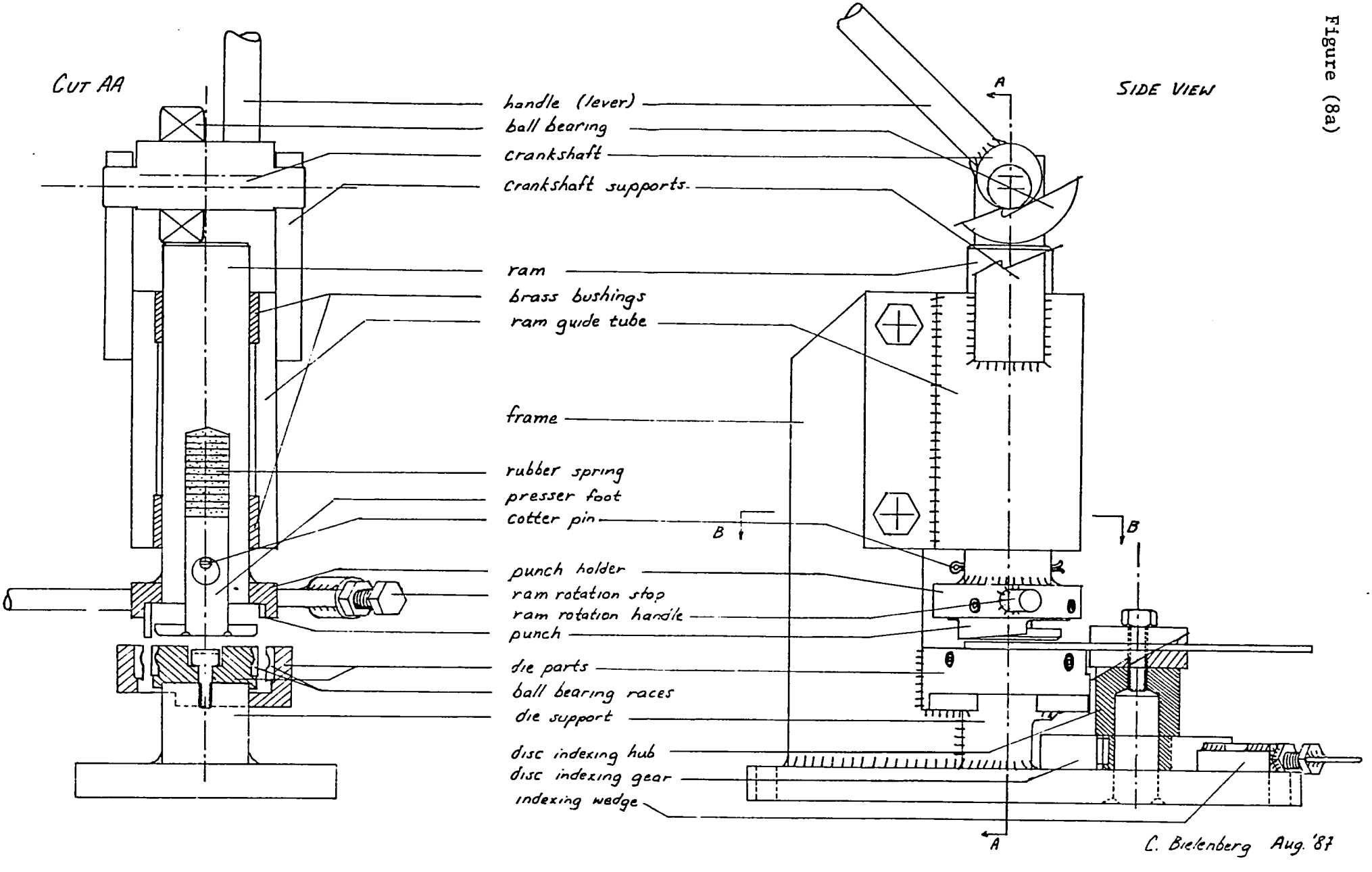

Figure (8a)

Figure (8b)

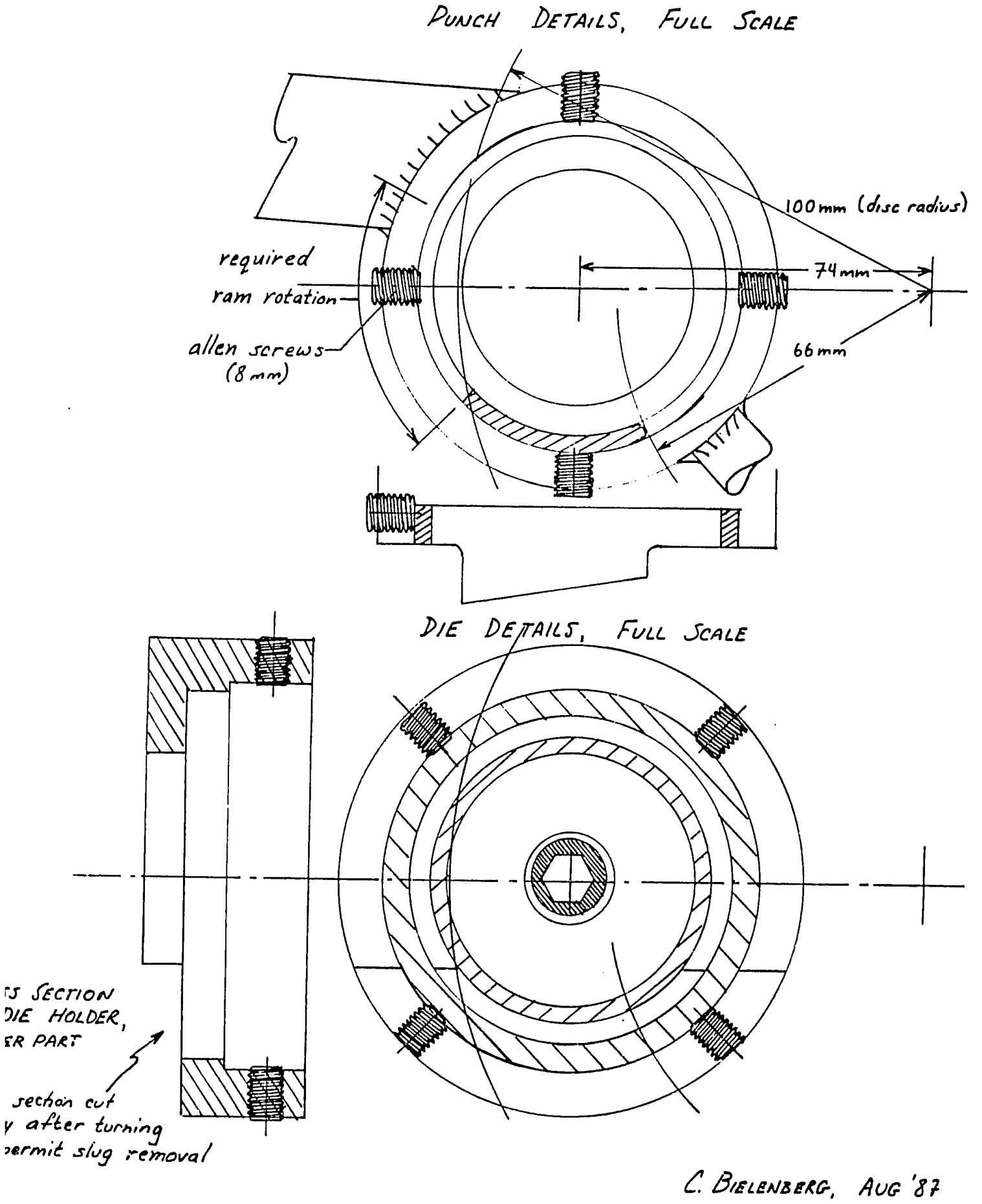
PUNCH DETAILS, FULL SCALE
100mm (disc radius)
required
ram rotation
74mm
allen screws
(8mm)
66mm
DIE DETAILS, FULL SCALE
TS SECTION
DIE HOLDER,
ER PART
section cut
y after turning
permit slug removal
C. BIELENBERG, AUG '87

Figure (8c)

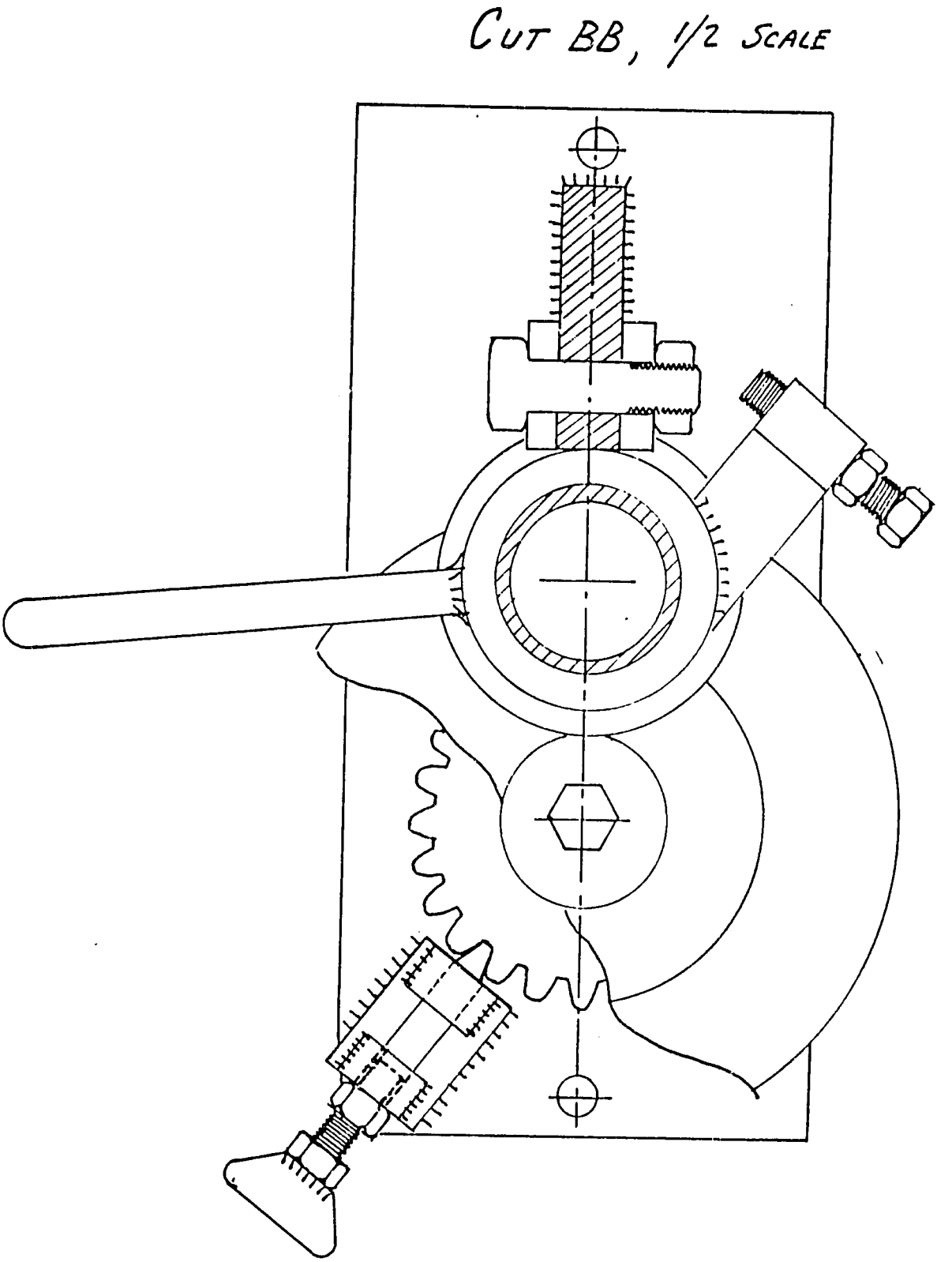

This mill at Bishalalo is typical of SODERZA's installations. The penstock, constructed of salvaged steel waterpipe of 300 and 400 mm diameter, carries water down an 11 meter drop from a deviation canal to the mill. Although patrons must walk up and down the steep path alongside the penstock with their headloads of cassava or maize, and pay 1.5 Zaires (or $.03 in Nov.'86) per kilogram, this mill is located along a major road near a large village and important market and mills over one ton per day.

An interior view of the same mill shows the small hammermill, built by SODERZA, and a refurbished FIAT crossflow turbine. Usually SODERZA installs its own turbines, but reused the empty housing of this imported machine to reduce the cost and speed of completion of this, one of its first mills. Most of the clients are women, milling for their own families and to sell flour in the market.

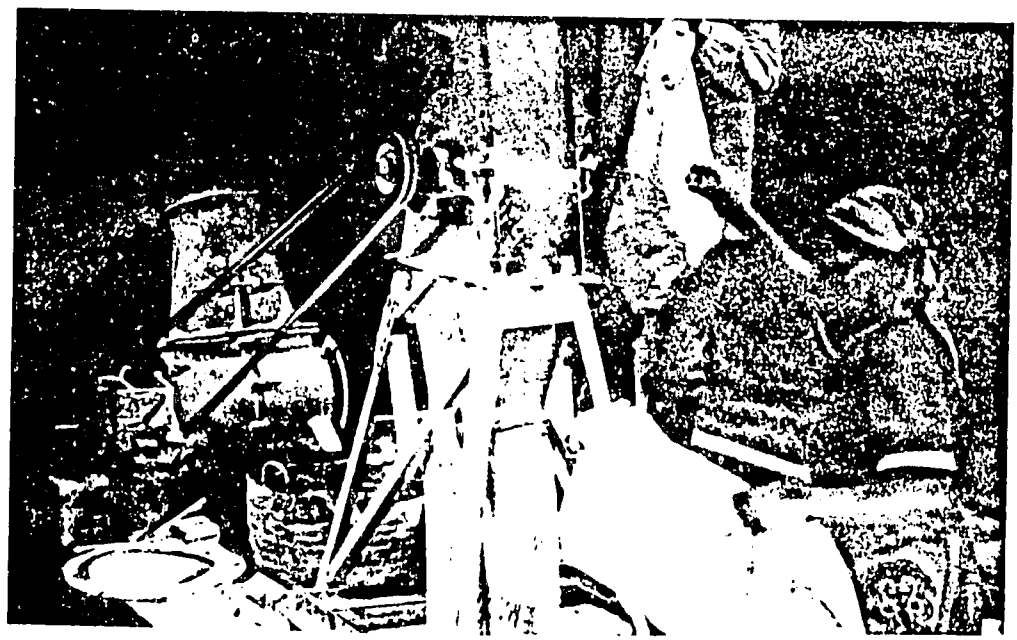

SODERZA's workshop, where the crossflow turbines and hammermills are made. In the foreground is a nearly completed hammermill being tested with an electric motor. Most of the workshop's equipment is visible in this photo.

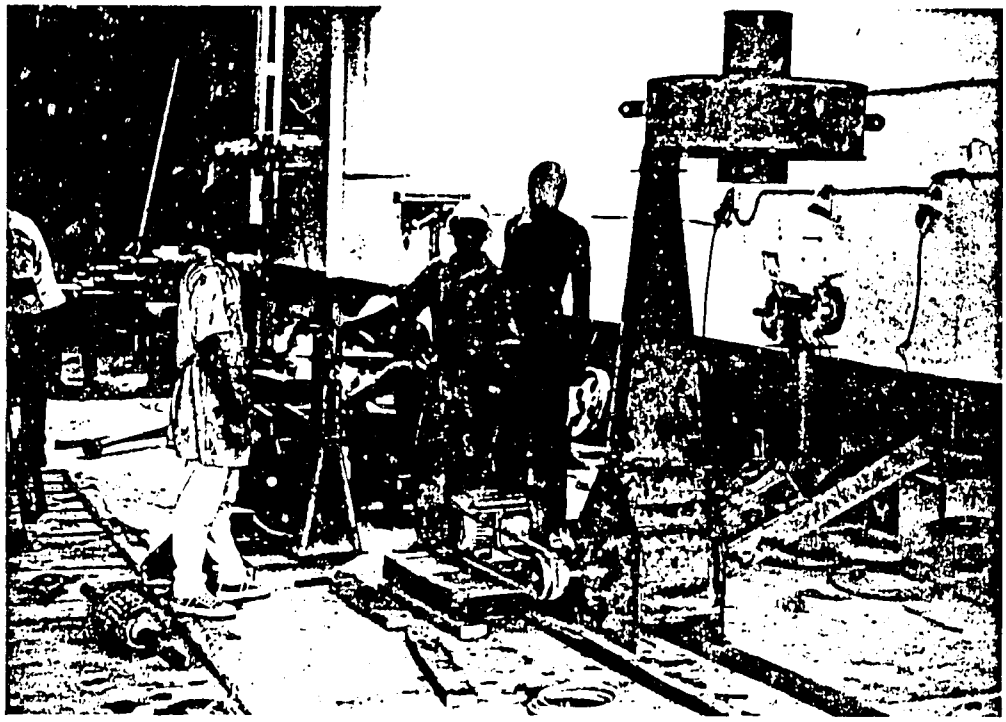

The three main components in the turbine are, from right to left, the jet, the housing, and the runner. The jet will, when completed, contain a butterfly valve for controlling the power output of the turbine and its water consumption. The aluminum bearing housings are cast in a primitive foundry on the premises.

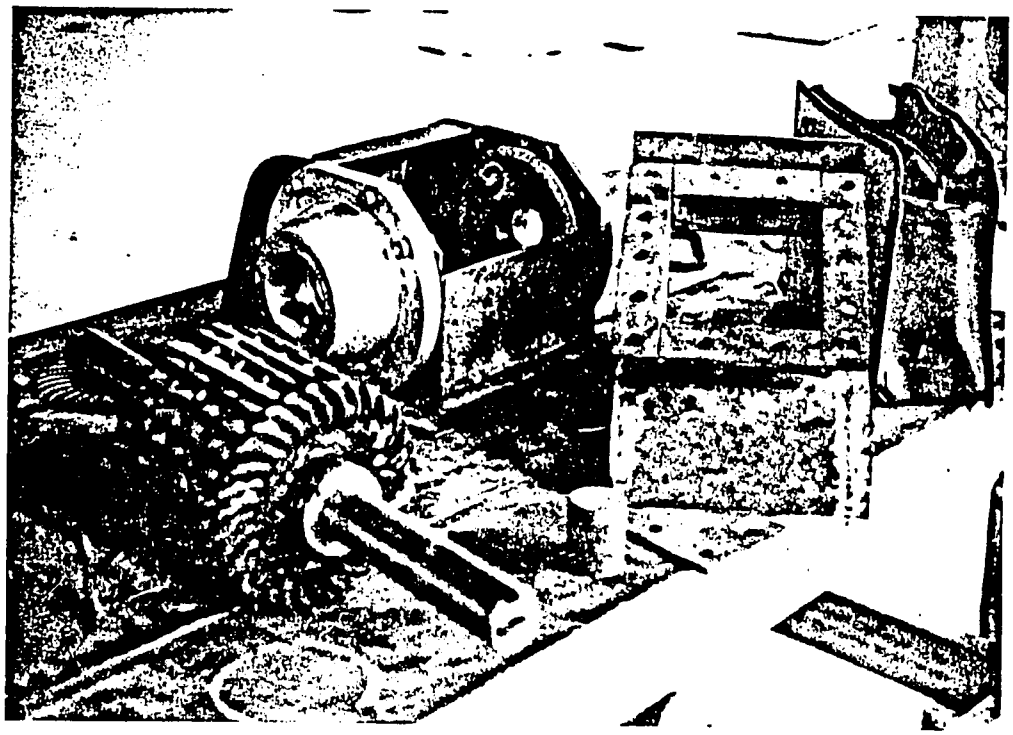

A turbine runner disc made by hand, at left, is compared with a disc produced on the prototype punch press. The number of blades was reduced from 32 to 25 to reduce the difficulty involved in welding between the blades.

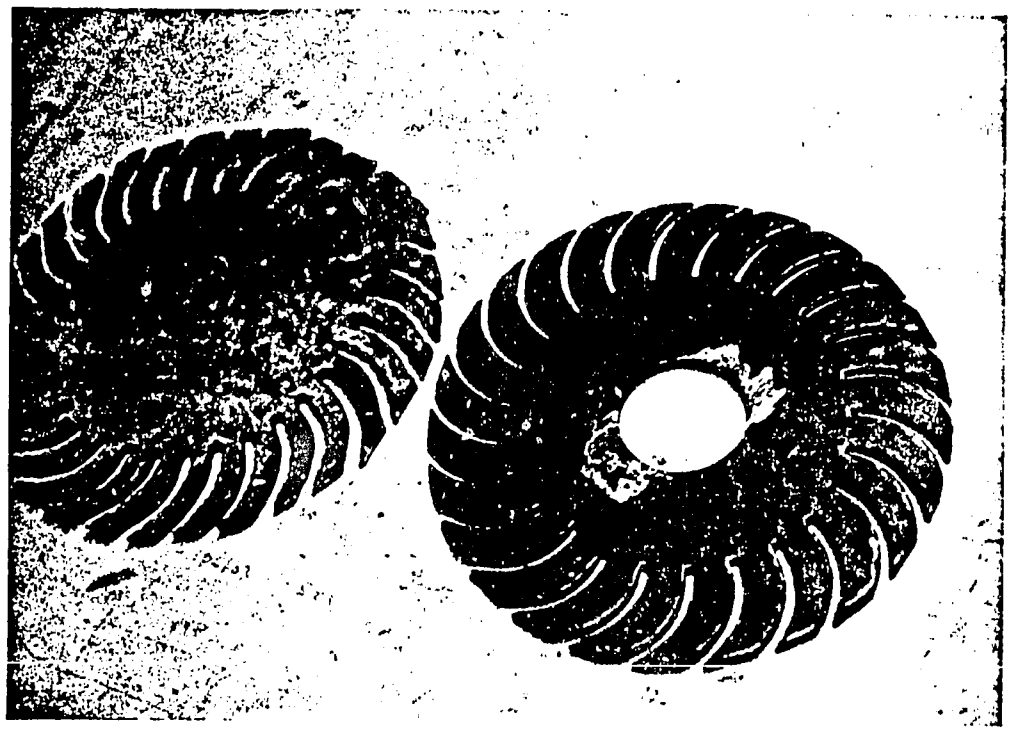

This photo shows how well the blades fit into the new discs. After the first few discs were made, the punch was reground to produce a rounded slot root. The square cornered root shown is apt to result in disc breakage.

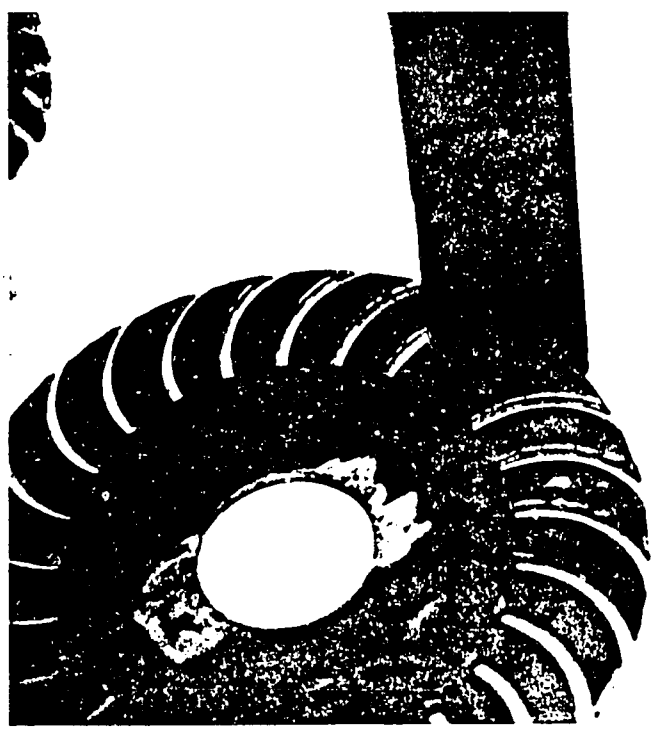

The punch press in action. The operator pulls down the ram with his right arm while controlling the position of the punch in the slot with his left. The stop bolt which limits the depth of the slot is visible here. The pair of rather small ball bearings used on the eccentric shaft proved to be too fragile and was replaced by a single larger bearing.

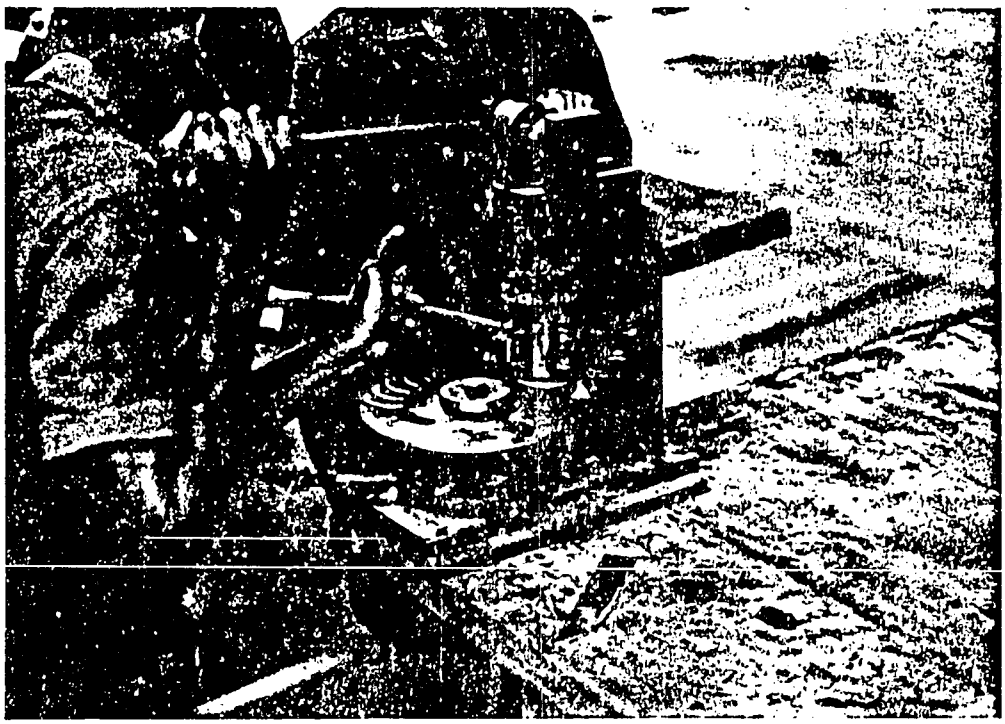

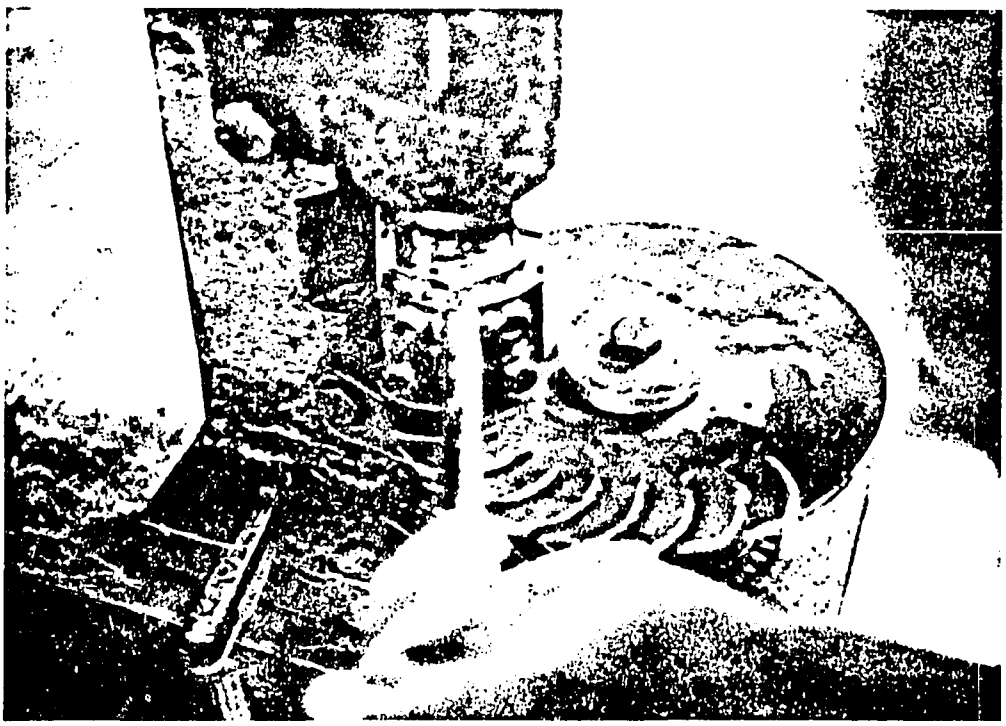

The punch and the connecting rod cap that serves as the outer cutting edge of the die are visible in this photo. The operator is tugging the disc after engaging the indexing wedge to verify its proper location. The compact arrangement of the die and indexing gear is dictated by the geometry of the discs.

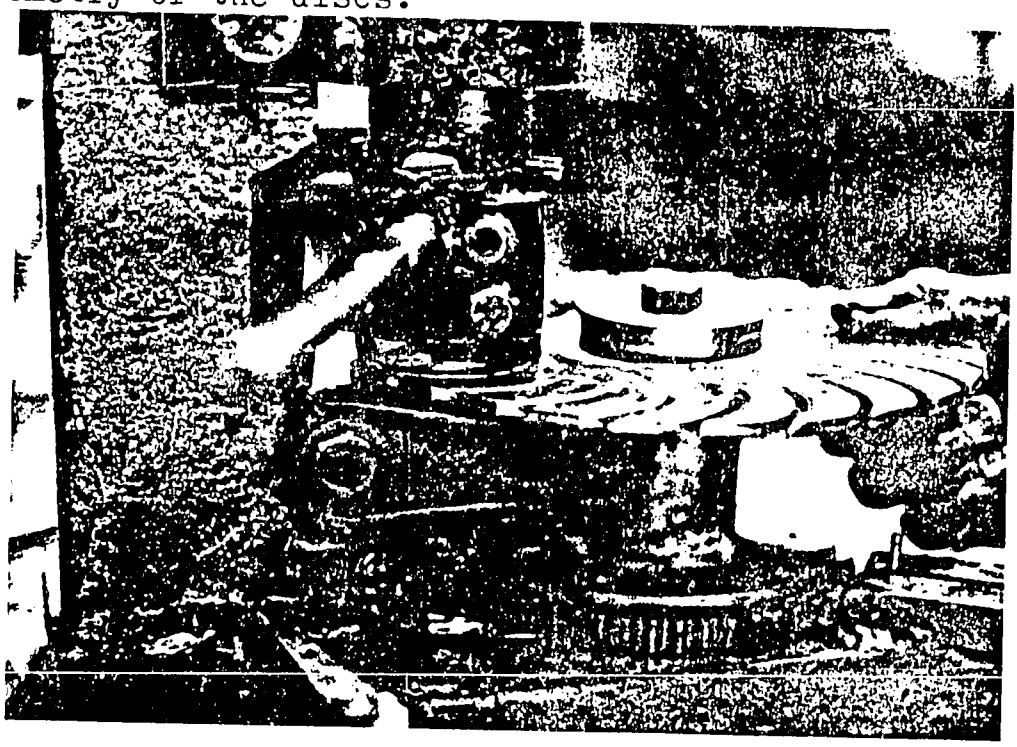
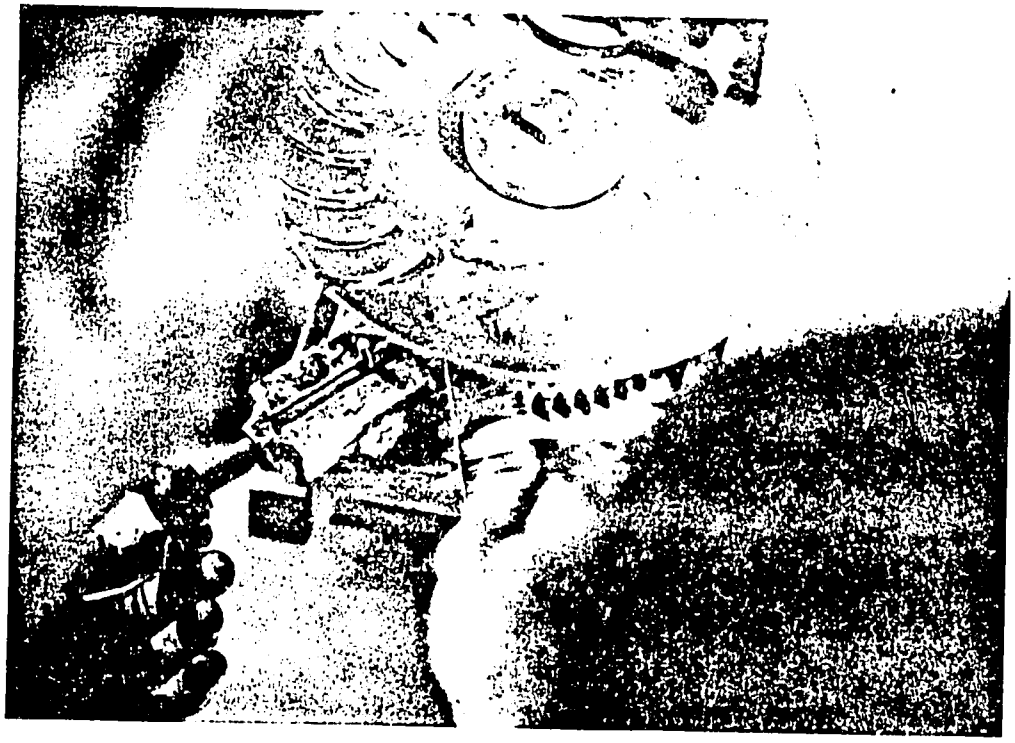
The operator is loosening the indexing wedge prior to advancing the disc to the next slot location. The presser foot and the bolt that limits ram rotation are visible at the top of the photo.