PN-ABC-850
61762

AGENCY FOR INTERNATIONAL DEVELOPMENT
WASHINGTON, D.C. 20523

DATE: 11/5/88

MEMORANDUM

TO: AID/PPC/CDIE/DI, room 209 SA-18

FROM: AID/SCI, Victoria Ose

SUBJECT: Transmittal of AID/SCI Progress Report(s)

Attached for permanent retention/proper disposition is the following:

AID/SCI Progress Report No. 5, 2 & 4
PR's March 1986
April 1987
Sept 1988

Attachment

PNABC-850

ISN 61762

PROGRESS REPORT

ON

PROJECT NO. 5.204 - DIGITAL INFORMATION TRANSMISSION ON ELECTRIC POWER LINES

PREPARED BY

PROF. S. YUNKAP KWANKAM

AUTOMATION AND CONTROL LABORTORY

Ecole Nationale Superieure Polytechnique

B.P. 8390 YAOUNDE Cameroon Tel: (237) 32-12-26 Telex: 8384 KN

September 1988

Rec'd in SCI: NOV 4 1988

INTRODUCTION

The original project document called for the project tp expire on October 31 1987. However, a second ammendment to this document extended the life of the project to December 31 1988. Project activities were then rescheduled as shown in the prgress report of April 1987.

PROGRESS MADE

As indicated in the progress report of April 1987 the encoder and decoder systems were implemeted using microprocessors, specifically the Motorola MEK6802D5 single-board microcomputer. This enabled easy modification of system parameters such as suppression time, and the study of their effect on detectability and spectral distortion. However, programming the microprocessor to implement various encoding and detection schemes remained difficult because code had to be entered in machine language using a monitor program.

To facilitate the software development aspects of the project, the system has been implemented using a more advanced single-board microcomputer, the MICROMEGAS. This module, which uses the 6809 microprocessor, permits software development in assembler language through the use of a personal computer system.

In July 1988 a request was made to seek authorization for modification to the project objectives. Our experience in the laboratory and subsequent discussions with the national electric utility in Cameroon (SONEL) had led us to conclude that the greatest impact of the project will be its use for remote meter reading. Based on this conclusion, work has been undertaken to develop the rmote meter reading application of the technology. To this end, an interface between a standard electric utility meter of the type used in Cameroon and the encoder/decoder unit developed earlier has been realized. Software drivers have been written to test this interface. (See thesis by Joseph Ngaku, June 1988.) Algorithms for speeding up the read process have been examined. (See thesis by Gilbert Fonkwo, June 1988.)

EXPENDITURE

Out of a total budget of One hundred thirteen thousand five hundred forty-four dollars ($113,544) a total of about sisty-eight thousand four hundred and four dollars ($68,404)

has been disbursed. The expenditure breakdown is as follows:

- Equipment - $31,129 +
- Technician salaries - $ 9,192 +
- Overhead - $ 2,455 +

Thus a total of forty-five thousand one hundred forty dollars ($45,140) remains unspent.

OUTPUT SO FAR

In addition to the outputs indicated in the progress report of April 1987, the following quantifiable outputs have been obtained:

- 1 paper "Parameter Bounds for a New Digital Power Line Communication Technique Using Waveform Modification"; Technology and Development Vol. 3 no. 1, pp. 33 - 40, June 1987.
- an electric utility meter interface and driver for remote pickup of meter reading.

Unquantifiable outputs include a significant amount of institution strengthening. The facilities provided through the project are the main equipment support of the Automation and Control Laboratory (ACL) of the Ecole Nationale Superieure Polytechnique (School of Engineering) of the University of Yaounde. During the 1987-88 academic year a total of nine student engineer theses were undertaken under the auspices of the ACL. The Laboratory also sponsored ... student final-year projects in the senior technician program.

DIFFICULTIES ENCOUNTERED

The project continues to be plagued by pproblems of logistical support as described in the April 1987 report.

Technical problems encountered center around parallel signal injection using a shunt element, as opposed to a series pass element of the implementation currently in use in the laboratory. A series pass element (an SCR in this case) requires that firing pulses be provided even when there is no data transmission on the line. This represents overhead on the data transmission scheme. Secondly, the load current in this case flows through the SCR. Thus, should the data transmission system fail to provide firing pulses or should the SCR fail in the open circuit condition, power is cut off from all loads downstream.

A shunt element (a transistor in our case) eliminates the overhead incurred with a series pass element. More important, any failure of the data transmission system or of the transistor in the open circuit condition will not result in loss of power for downstream loads.

For these reasons, and the fact that a shunt element is much better suited to use of this technology for remote meter reading, we are vigorously pursuing the development of an injection method using a shunt element.

CONCLUSION

The scientifique basis for the proposed technology is sound and has been demonstrated in the laboratory. The major impact of this technology, locally, will be its use in remote meter reading. Parallel injection with a shunt element will greatly facilitate this application. However, more time will be needed to complete this development. We will therefore make a formal request to prolong the life of the project (without additional funding) for another eight months; i.e until August 31 1989.

LOW VOLTAGE SIMULATION OF A NEW DIGITAL POWER LINE COMMUNICATION TECHNOLOGY

by

S. Yunkap Kwankam, J.M. Ngundam, N. Ntomambang Ningo and D.T. Ngamy

Automation and Control Laboratory
Ecole Nationale Superieure Polytechnique
University of Yaounde
YAOUNDE
Cameroon

This research has been carried out under a grant from the United States Agency for International Development (USAID) under its Program for Science and Technology Cooperation (PSTC); AID project no. 936-5542, proposal no. 5.204

Abstract

This paper describes a low voltage hardware simulation of a new technology for digital information transmission in electrical power lines, appropriate to developing country situations (where line frequency, voltage amplitude, and voltage waveform are subject to noise variations). In the method, binary information is encoded as the presence (0) or absence (1) of the power signal on the line during a well-defined interval after each zero crossing.

Two lamps are independently controlled by means of two switches, through a single two-wire cable of length three metres connected to a stepped-down version of the mains voltage. Each transmission is made up of 16 bits with a cycle time of 320 milliseconds.. The simulation has run successfully at line voltages between 220 and 230 volts rms, at frequencies between 48 Hz and 52 Hz, and with distorted sinusoidal mains signal.

INTRODUCTION

Interest in transmitting information on electrical power lines has existed ever since the advent of electrical power distribution networks. The idea of using the power lines themselves as the communication links for load management, fault isolation and other control purposes was advanced by Routin and Brown [1] in 1898. Since then, various techniques for power line communication have been developed. By far the most widely used of these is ripple control [2]-[7]. Other more recent techniques involve the carrier-less transmission of strictly binary information by modification of the power line voltage. These include flatening of the waveform tops [8], modification of the zero-crossings [9], and waveform suppression during a well-defined interval begining with each zero-crossing [10].

This paper describes work done on implementing a low voltage simulation of the waveform suppression technique.

THEORETICAL BACKGROUND

In the waveform suppression scheme outlined by Kwankam [10], binary information is encoded as the presence or absence of the power signal on the line during τ seconds begining with each zero-crossing. A 1 is encoded by suppressing the signal, and a 0 by leaving the waveform unmodified. Typical waveforms encountered in the scheme are shown in Fig. 1.

Interest in this method is two-fold. Encoding binary information by advancing or retarding the zero-crossings of the power signal waveform [4], or by flatening the waveform tops implies very tight controls on the line frequency. In Cameroon, and other developing countries, frequency, voltage amplitude and even waveshape are very poorly controlled. Information encoding by waveform suppression after the zero-crossing is immune to variations in line frequency and amplitude, and even to waveshape provided that the signal is strictly monotonic about the zero-crossings. Secondly, data transmission systems are, classically, either baseband or carrier-modulated systems. The waveform suppression scheme is of academic interest since it is a combination of baseband and amplitude modulation techniques. Signal suppression implies 100% modulation. But as the frequency spectra of the information signal and the "carrier" signal are not separated, the method has strong baseband tramsmission system characteristics.

Although the scheme can be used strictly for data transmission, the simulation is based on its use to remotely perform control functions in a power network. A system block diagram of the simulation is shown in Fig. 2. The generator is a stepped-down version of the mains. The transmission line is a three-metre audio cable, and the loads are 6-volts flashlight bulbs. The "generator" will later be replaced by a signal generator to facilitate detailed study of the system's immunity to frequency and amplitude variations, and its sensitivity to waveshape.

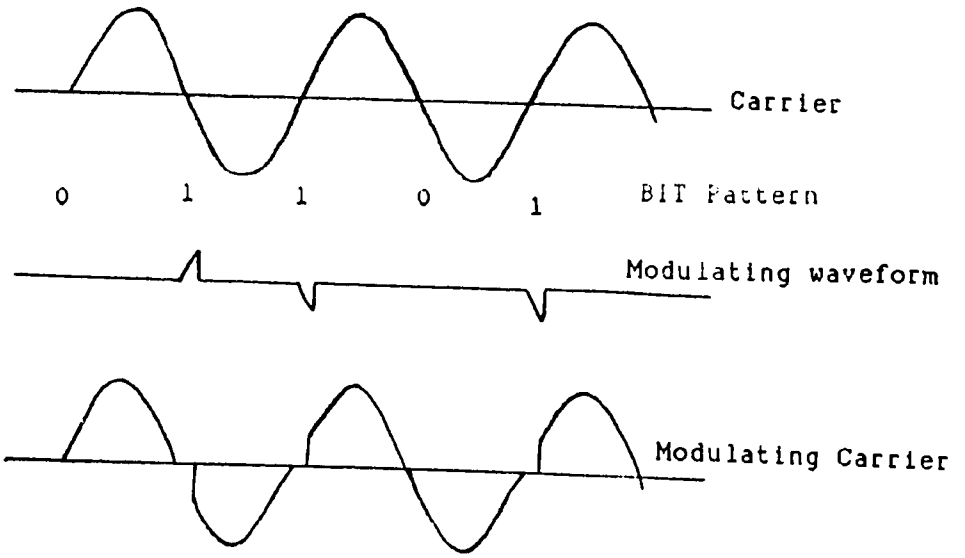

Fig. 1: Typical Waveforms in the Scheme

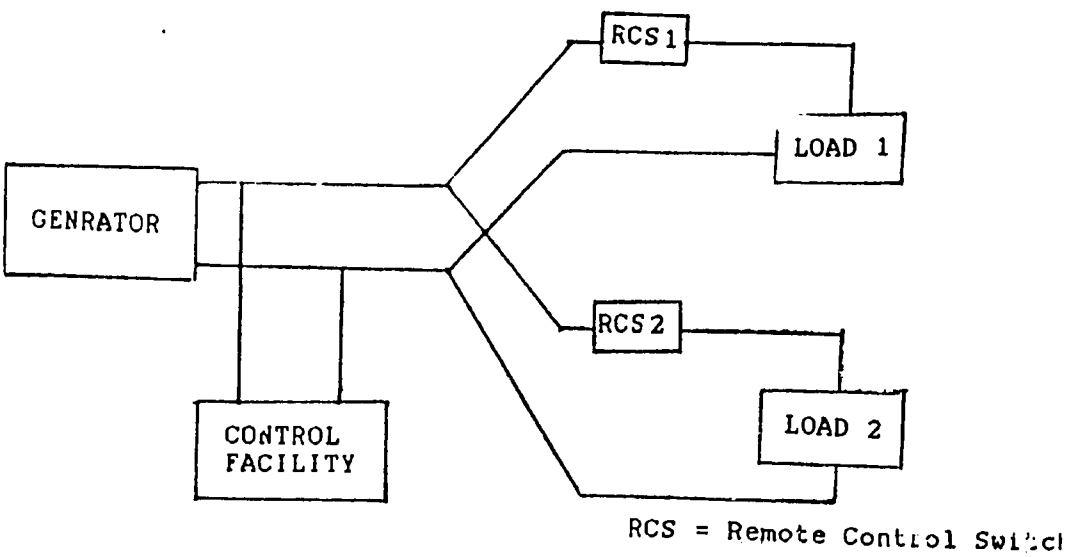

Fig. 2: System Block Diagram.

Control Bit 11	Operation	Data Bit 12	Data Bit 13	Function
0	Read	x	0	open
0	Read	x	1	closed
1	Write	0	x	open
1	Write	1	x	closed

Table 1: Read/Write modes

DATA STRUCTURE

Control data are transmitted in the form of 16-bit words organized as shown in Fig. 3. The first field, bits 0-2, consists of three 1's used to synchronize the decoding circuit. The next eight bits constitute an address field used to designate a specific load to be controlled. In the current simulation with only two loads, the uniqueness of the synchronization character, 111, is not an issue. Even so, it must be assumed that the decoder is permanently ON (in the simulation it is simply turned ON before begining transmission) and that every transmission begins with a synchronization charater, to permit the lamps to be assigned certain addresses in the address space.

Bits 11-13 constitute a READ/WRITE field. Bit 11 is 1 for a write (control) operation. In this case the specific control, ON or OFF, is given by bit 12. A READ operation has been built into the data structure to allow for the possibility of confirming the state of a given load. The information read appears as bit 13. Table 1 gives a summary of the permissible modes within the READ/WRITE field.

The last field is devoted to housekeeping. Bit 14 is a parity bit while bit 15 is a stop bit, currently set at 0.

THE ENCODER

The encoder operates as shown functionally in Fig. 4. A zero-crossing is detected and the switch is left open or closed, accordingly as the bit to be transmitted is a 0 or a 1. When the switch is closed, the line signal is summed with a 180-degree phase-shifted version of itself to suppress the signal. In a low-voltage simulation, the operations of inversion, switching and summing may be performed in a single analog switch. The present set-up uses a TL 610 analog switch for this purpose. It is connected directly between the "line" signal and system inputs which are driven by the modified waveform. The switch is then ON except for those times when the signal is to be suppressed. This corresponds to parallel injection with a series pass element as described in [6].

The timing circuit is shown schematically in Fig. 5. A train of impulses, one at each zero-crossing, is the encoder clock. It is divided by 16 in the 4-bit binary counter to provide a word clock, LDCLK. Suppression time corresponds to the quasi-stable state of the 74121 monostable multivibrators and may be controlled by varying the timing resistor. The data bit to be transmitted is ANDed with the outputs of the monostables to provide an injection control signal.

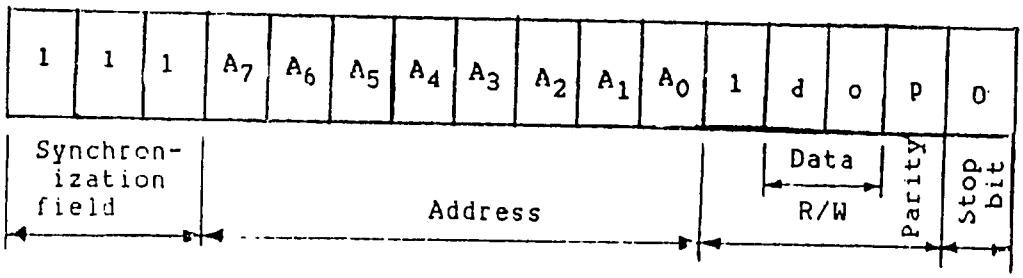

Fig. 3: Data Structure

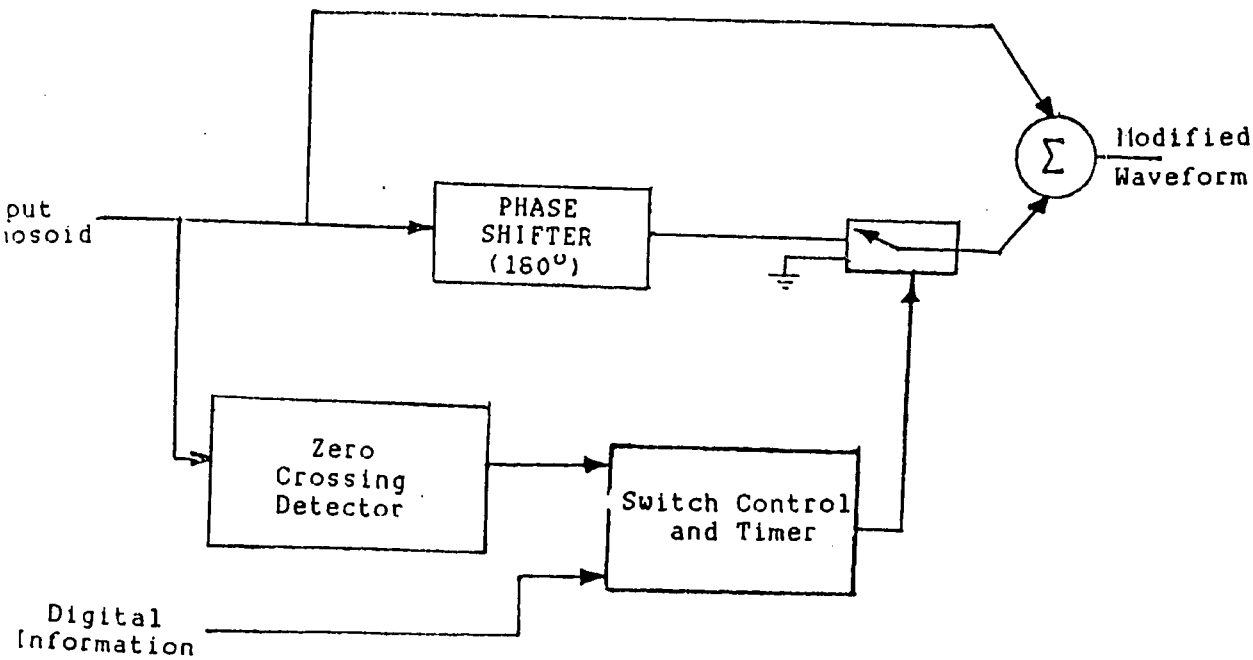

Fig. 4: Functional Block Diagram of the Encoder

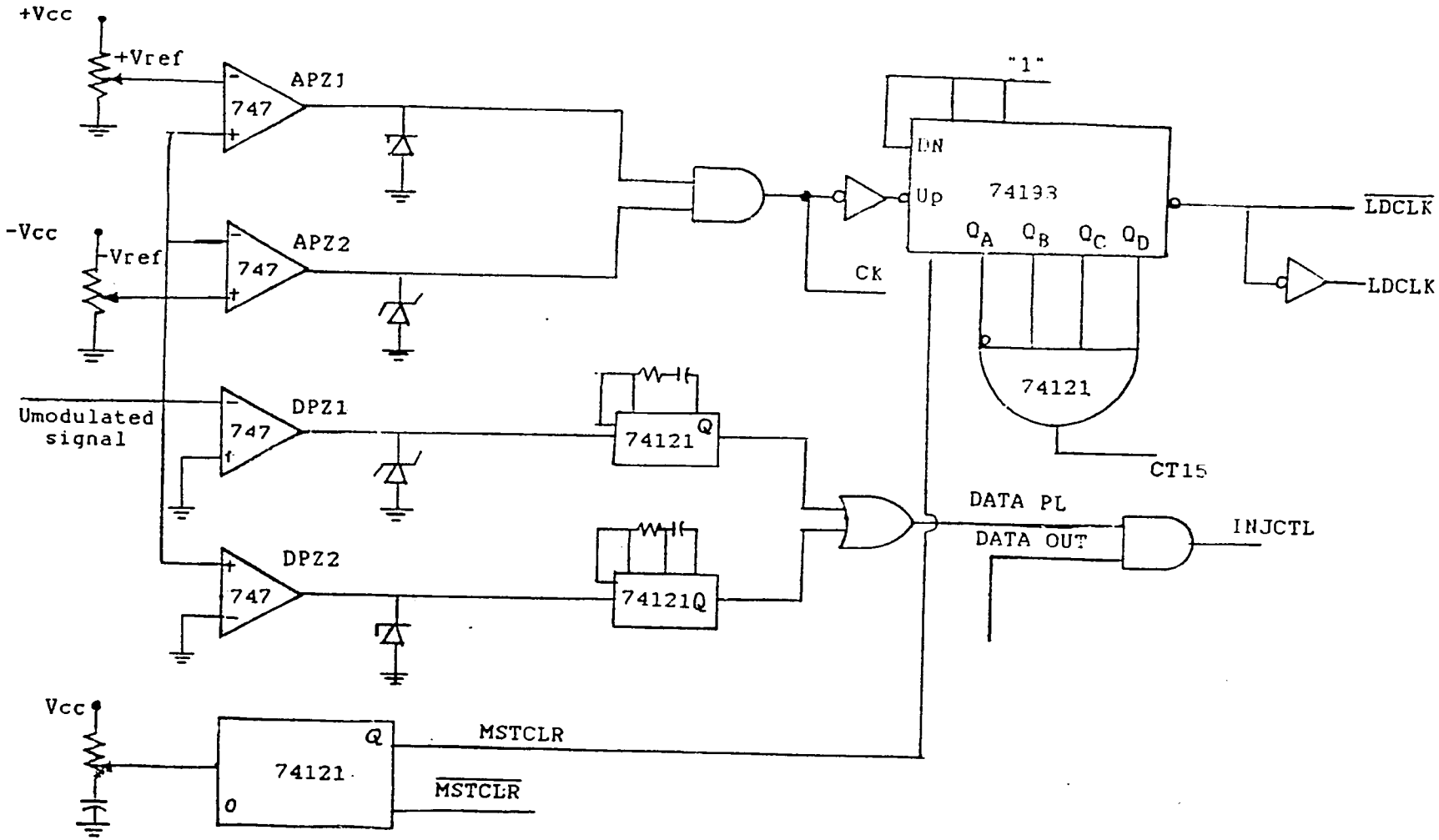

Fig. 5: Timing Circuit

The simulation provides for remote control of up to 16 separate loads, using DIP switches, (Fig. 6). The states of the switches are cyclically multiplexed to occupy the position of the data bit, bit 12, in the transmitted word. The multiplexer control lines are driven by the low order nibble (4 bits) of the address counter. Thus the multiplexer is in synchronism with the addressing. The second stage of the address counter is not clocked; rather it can be set to provide any four-bit addresser header (bits A_4 - A_7). The 74165 parallel-in serial-out shift registers handle the serialization of the bits of each word. The serial parity generator/checker consisting of a D-type flip-flop and an XOR gate generates the parity bit which is gated unto the data line as bit 14. Transmission is controlled by a switch, with the associated circuitry guaranteeing that transmission always begins with the start sequence and that any word being transmitted when the switch is turned OFF is completed.

THE DECODER

The decoder consists of three main parts:

(a) a bit detection circuit

(b) a circuit for decoding address and information

(c) a lamp control circuit

Bit detection consists of first full-wave rectifying the modulated signal and then feeding this into an automatic gain control (AGC) circuit. The role of the AGC circuit is to compensate for any variations in the amplitude of the line voltage. The signal is then processed as shown in Fig. 7. The counter clock (CTRCK) serves to delimit bit times while CLOCK and its complement CLOCK' are used to latch data and advance them through the address and information detection system.

Address and control function detection are accomplished by the circuit shown in Fig. 8. The 74193 binary counter is enabled upon detection of the synchronization character. Thereafter, it is advanced with each new bit, thus enabling specific fields and bits within the data word to be identified. The address is verified at the appropriate bit time by comparing the contents of the serial-in parallel-out shift register, 74164, with the word encoded in the DIP switches.

Lamp control logic is updated when three conditions are satisfied:

(i) the address is correct

(ii) the operation is a WRITE (control) operation, and,

(iii) the parity check bit is correct.

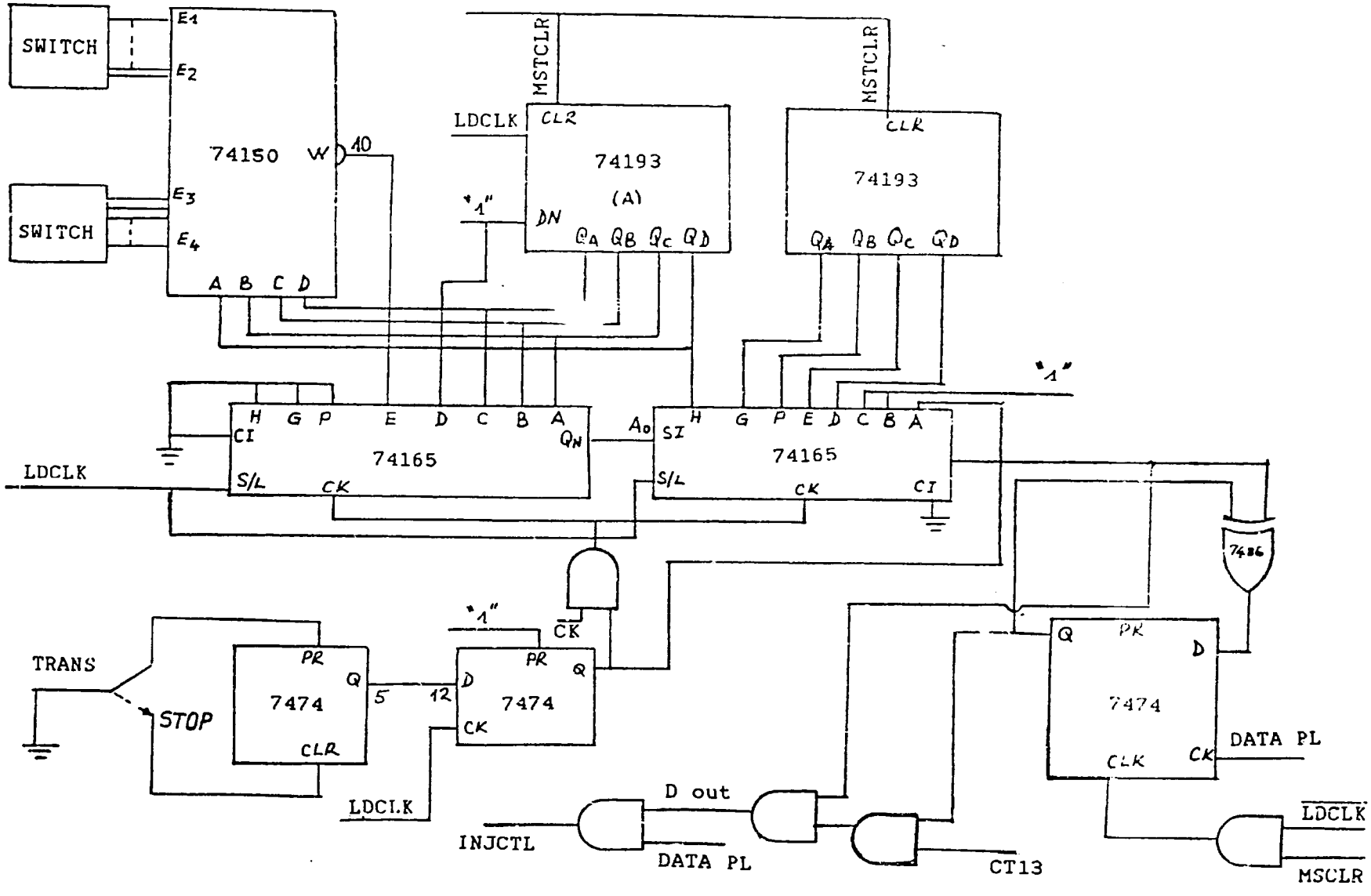

Fig. 6: Data Capture and Serialization

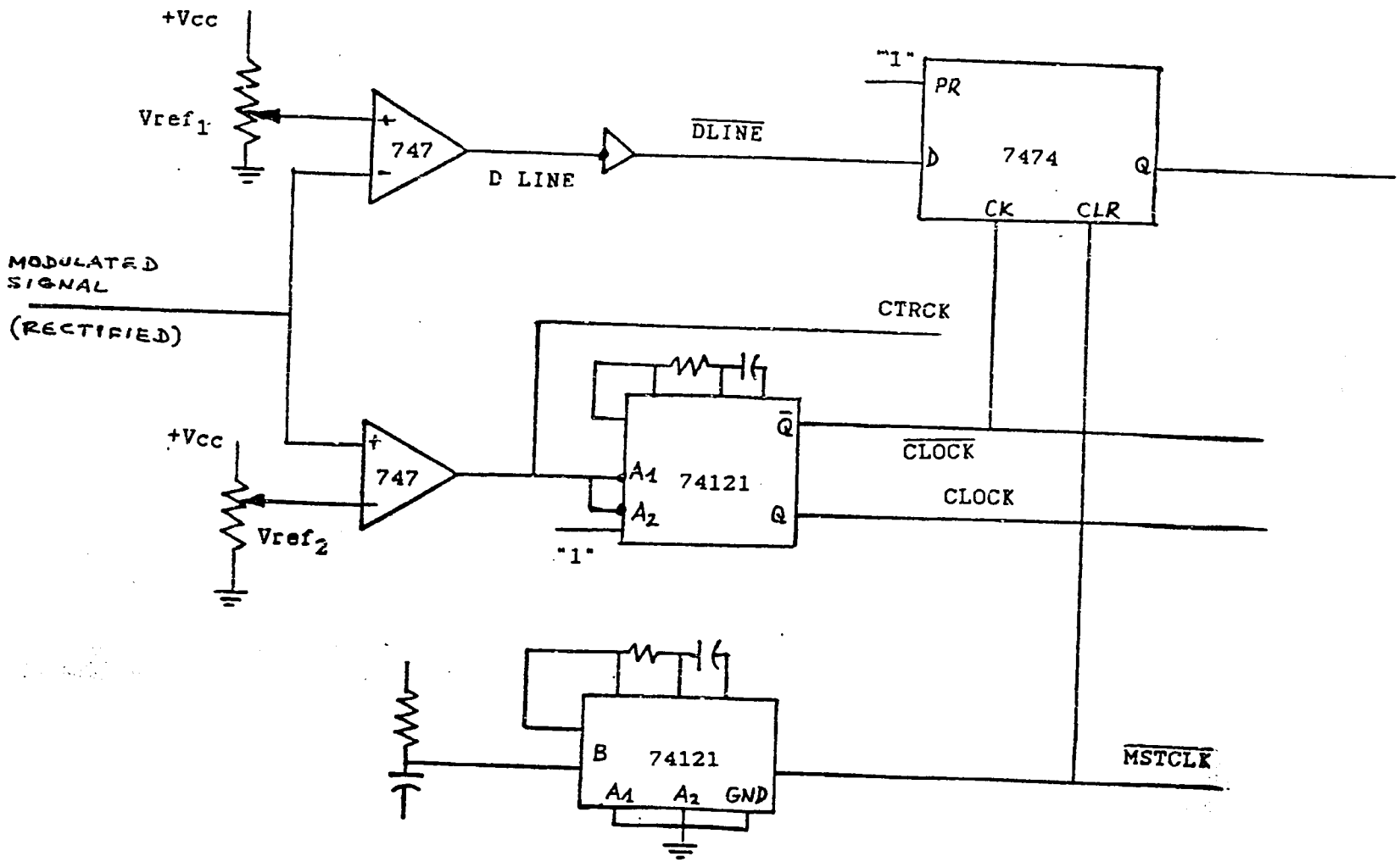

Fig. 7: Detection Circuit

The state to which the lamp is to be set is then latched into a flip-flop. The analog portion of the lamp control circuit consists simply of a transistor switch driven by an open collector TTL buffer. This additional circuitry is imposed by the 300 mA current required to light the lamps. In general, any appropriate interface may be used between the flip-flop and the load.

RESULTS AND CONCLUSIONS

The two lamps used in the simulation have independent control circuits. However, the same circuit is used for addressing and control function detection in both cases, with one lamp assigned to odd addresses and the other to even addresses. Thus by setting the decoder DIP switches to address 0A and 0B (hexadecimal) lamp no. 1 is controlled by DIP switch 10 of the encoder while lamp no. 2 is controlled by DIP switch 11. We were thus able, with only two lamps, to test the system at each of sixteen addresses for any fixed four-bit address header.

At a line frequency of 50Hz, the maximum response time for a lamp was computed as 2.56 seconds. Since the activation of the encoder DIP switches is at random with respect to the word transmission interval, the lamps were observed to turn ON anywhere from "immidiately" (150 msec at 50 Hz) after switch activation to about 2.5 seconds later. If the entire address space is filled up with uniquely addressable loads (256 in all) the maximum response time would be 40.96 seconds. Clearly, such a response time is undesireable in a real life remote control environment. This delay can be reduced dra-tically by building more intelligence into the encoder, so that switches are not polled but serviced on an interrupt basis.

Detailed study of the schemes immunity to variations in line frequency and voltage, as well as to waveform changes, will be greatly facilitated when the mains voltage is replaced by a signal generator. However, the simulation has run successfully at line voltages from 220 to 230 volts rms, and frequencies between 48 Hz and 52 Hz. The waveform, as shown in Fig. 9 is also not strictly sinusoidal. These preliminary findings lead us to beleive that the voltage waveform suppression scheme will prove to be a reliable method of power line digital communication even in environments where line signal parameters are poorly controlled, as is the case in developing countries.

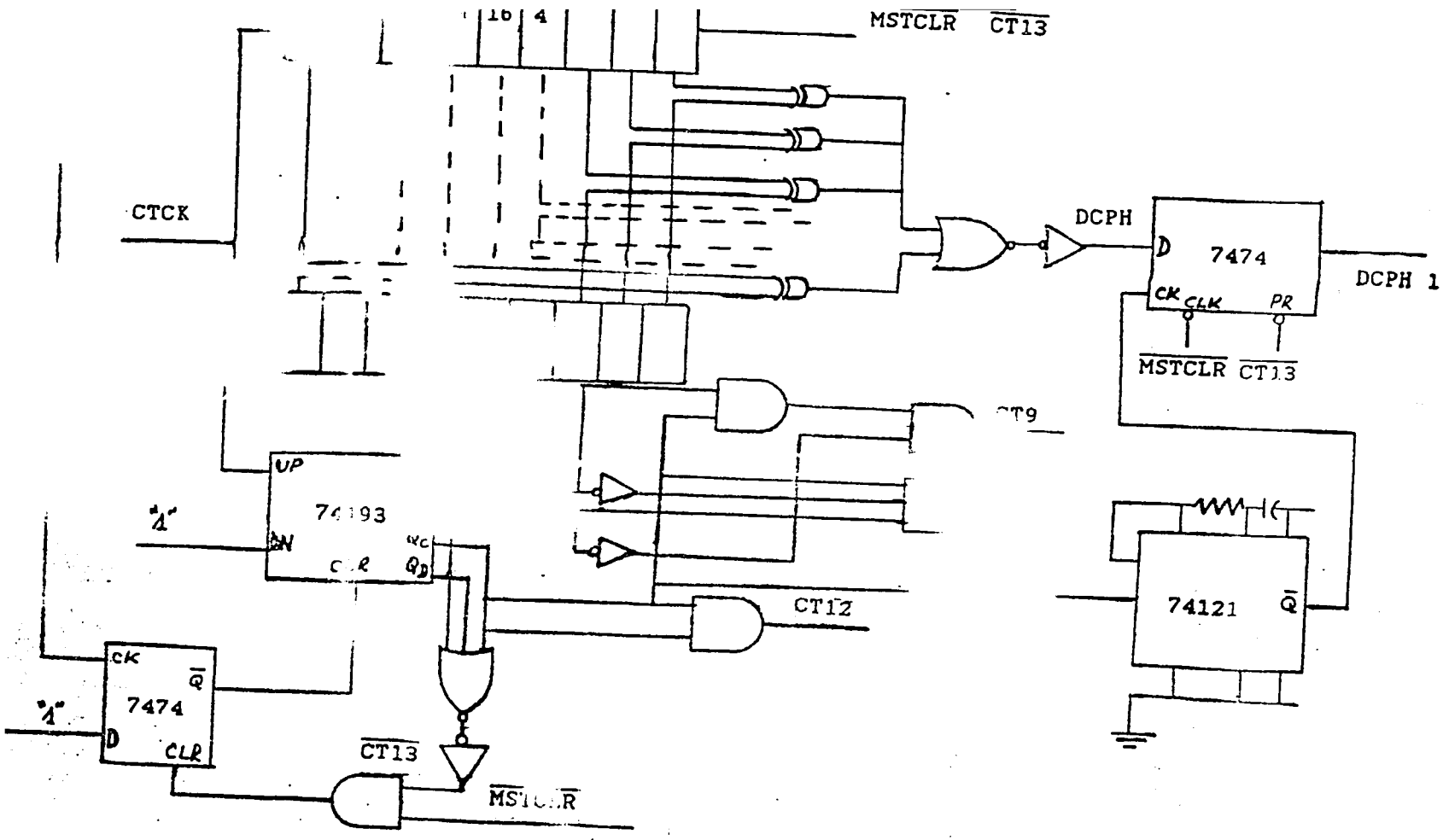
16
4
MSTCLR
CT13
CTCK
DCPH
D
7474
CK
CLK
PR
DCPH 1
MSTCLR
CT13
CT9
UP
74193
"1"
EN
CLR
QD
CT12
74121
Q̄
CK
7474
Q̄
"1"
D
CLR
CT13
MSTCLR

REFERENCES

1. ELBEL, W. "Events in the History of Ripple Control", Landis and Gyr Review, no. 4, Zug, Switzerland, pp 3-18.

2. J. Van Heek, Z. Stanley Stys, and C. Stillhavd, "Ripple Control: a proven load management tool", Paper presented to the American Power Conf., (Chicago, IL, Apr. 20-22, 1976).

3. E. Baumann, "DECABIT: a new electronic Zellweger ripple control system", As reprinted from Zellweger Impulses, No. 3, Zellweger Uster Ltd., Uster, Switzerland, 1971.

4. P.A. Schieper, "Bi-directional ripple control system DECABIT/RETROBIT", Paper presented at the IEEE Control of Power Systems Conference and Exposition, Oklahoma City, OK, Mar. 10-12, 1976.

5. "Computerized ripple control eliminates execessive drain on electric utility supply", Comput. Des., pp 55-59, Mar. 1977.

6. "Plessey: Rythmatic Control", PLS-17.33, Technical Brochure Published by Plessey (New Zealand) Limited, Box 21-142, Auckland, New Zealand, June 1975.

7. R. Kniel and J. Biro, "Low frequency ripple control systems", As Reprinted from Zellweger impulses, Nos. 1 and 2, Zellweger Uster Ltd., Uster, Switzerland.

8. Stonehouse, B.H. and Waston, P.J. "Load Control Signalling by Distortion of the System Voltage Wave Form", Proceedings of the IEE 2nd International Conference on Metering Apparatus and Tarrifs for Electricity Supply, Sept. 26-29, 1972, pp. 317-322

9. Morgan, M.G., and Takuldar, S.N. "Electrical load management: Some Technical, Economic, Regulatory and Social Issues". Proceedings of the IEEE, vol. 67, no. 2, Feb. 1979, pp. 241-313.

10. S. Yunkap Kwankam, "Principles of a Digital Communication Scheme Using Power Signal Waveform Modification", Tech. and Dev. Vol. 1, No. 1, Dec. 1985.

PARAMETER BOUNDS FOR A NEW DIGITAL POWER LINE COMMUNICATION TECHNIQUE USING WAVEFORM MODIFICATION

by

S. Yunkap Kwankam N. Ntomambang Ningo, John B. Bilikha and D.T. Ngamy

Automation and Control Laboratory
Ecole Nationale Superieure Polytechique
University of Yaounde
YAOUNDE
Cameroon

ABSTRACT

Suppression time, tau, is a critical parameter in a new technology for digital information transmission on electrical power lines based on signal suppression or nonsuppression during a well defined period beginning with each zero-crossing. It affects the noise immunity (signal detectability) of the technology, and power signal distortion (spreading of the power density spectrum) in opposite ways. i.e., tau values which tend to improve noise immunity tend to worsen signal distortion, and vice versa.

This paper presents the results of work carried out on determining bounds for tau. Spectral analysis of the modified power signal, performed for various values of tau, shows that spectral distortion varies proportionately with tau. Signal detectability as a function of tau was determined theoretically by assuming a given detector, (a sampling window followed by a match filter). The relationship is nonlinear. In conclusion acceptable bounds for tau are shown to be 1.1 ms and 3.0 ms..

INTRODUCTION

The physics of a technology for digital information transmission on electrical power lines, using power signal waveform modification was outlined by Kwankam [1]. A low tension simulation of this technology was attempted by Kedi [2], and finally realized by Etoung and Nyemek [3], as well as Kwankam et al [4]. The method is based on signal suppression during a well defined interval beginning with each zero-crossing. This suppression time, tau, is thus a critical parameter in the success of the method. In particular, it affects the noise immunity (information detectability) of the technology, and power signal distortion (spreading of the power density spectrum) in opposite ways. I.e. tau values which tend to improve noise immunity tend to worsen power signal distortion and vice-versa. This paper presents the results of work carried out in determining bounds for tau.

This research has been carried out under a grant from the United States Agency for International Development (USAID) under its Program for Science and Technology Cooperation (PSTC) : AID project no 936-5542, proposal no 5.204.

PHYSICS OF WAVEFORM MODIFICATION

Waveform modification by signal suppression may be considered as the addition of a 180° phase shifted version of the signal during the suppression interval. It may also be viewed as the limiting case of amplitude modulation. i.e. 100% modulation. Consider the waveforms involved in a single suppression, as shown in Fig. 1. The unmodified signal of radian frequency ω_0, period T, and amplitude A_0 is,

$$f_1(t) = A_0 \sin(\omega_0 t)u(t) + A_0 \sin\omega_0(t-T/2)u(t-T/2) \quad (1)$$

where $u(t)$ is the unit step function

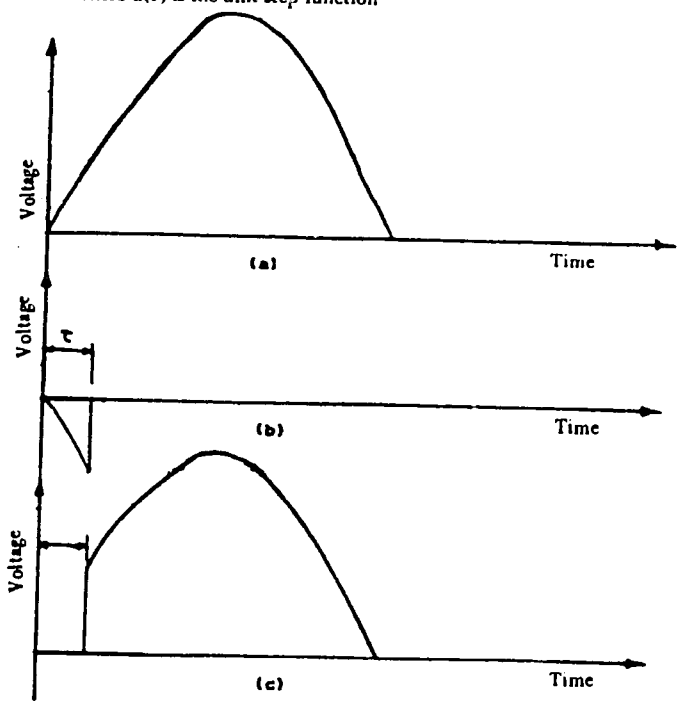

Fig. 1. Signal Suppression during a Single Half Cycle. (a) Unmodified Signal: (b) Modulating Signal. (c) Modified Signal.

The modulating signal is

$$f_2(t) = A_0 \sin(\omega_0 t)u(t) + A_0 \sin(\omega_0 t)u(t-\tau) \quad (2)$$

where τ is the suppression time.

The modified signal is therefore,

$$f_3(t) = f_1(t) + f_2(t)$$

$$= A_0 \sin(\omega_0 t)u(t-\tau) + A_0 \sin(\omega_0(t-\tau))u(t-\tau) \quad (3)$$

It is readily shown [1] that the Laplace transform of $f_3(t)$, in the case where, for simplicity, we have set $A_0 = 1$, is

$$F_3(s) = \frac{\omega_0 e^{-s\pi/\omega_0}}{s^2 + \omega_0^2} + \frac{e^{-s\tau}}{s^2 + \omega_0^2}[\omega_0 \cos\omega_0\tau + s.\sin\omega_0\tau] \quad (4)$$

As the power density spectrum of $f_3(t)$ is $F_3(s).F_3^*(s)$; where $F_3^*(s)$ is the complex conjugate of $F_3(s)$, (4) also provides a way of determining the effect of the suppression on the signal in terms of harmonics.

Since the signal will be borne by a power line, it is important to examine the effect of the transmission line on the modified waveform. Using either an L-, π-, or T- section as a model of a transmission line, it can be shown that as a wave propagates, along the z-direction, its amplitude is given by

$$A(z) = \left[\frac{A_0}{e^{\gamma\lambda} + e^{-\gamma\lambda}}\right]\left[e^{-\gamma(z-\lambda)} + \rho e^{\gamma(z-\lambda)}\right] \quad (5)$$

where, A_0 is the amplitude at $z = 0$, λ is the length of the line, γ is the propagation constant, and ρ is the reflection coefficient, all given by well known expressions.

Characteristic values for the lines encountered in Cameroon are shown in Table 1. The case of the low tension line is not considered because of the short transmission distances involved at this voltage level. It is also assumed that characteristic conductance is negligibly small. In determining the effect of the transmission line on $f_3(t)$, it suffices to examine how $f_1(t)$ and $f_2(t)$ are affected. And given that we are simply interested in distinguishing between two states (0 and 1) in this scheme, the influence of the line may be summarized in the losses suffered by an unmodified sinusoid. We shall return to this when we consider information detectability.

Type of line	R (Ohm/km)	L(H/km)	C(μF/km)
Single-phase 15.000 and 17,500 V	0.83	0.05	6.54×10^{-3}
Three-phase 15.000 V	0.30	0.25	1.57×10^{-3}
Three-phase 30.000 V	0.19	0.66	0.02
Three-phase 90,000 V	8.6×10^{-2}	0.74	0.02
Three-phase 225,000 V	4.9×10^{-2}	0.62	1.9×10^{-2}

Table 1: Characteristics Values for Lines in Cameroon

POWER SIGNAL DISTORTION

Since the technology under investigations involves changing some characteristics of the power line signal, quantitative knowledge of these changes is indispensible to an evaluation of the technology. In attempting to determine a measure or set of measures with which such changes may be specified one readily thinks of such attributes as amplitude, frequency, waveshape, harmonic content and the extent of discontinuities in the signal. This last criterion is important to devices, such as thyristors, which are sensitive to rate effects: anode-to-cathode voltage change rates in excess of hundreds of volts per mircosecond will cause the device to turn on.

The switching circuits used and the voltages they are expected to switch in the implementation of this technology are such that there is no threat of hazards to devices which are sensitive to rate effects. Signal suppression clearly does not affect the fundamental frequency of the power signal. Similarly, peak amplitude is only compromized if the suppression time exceeds one-fourth of the period. Harmonic content, while providing significant information on the effect of suppression is inappropriate because only discrete frequencies are considered.

A measure which appropriately defines the extent of the changes in the power signal is its power density spectrum (PDS). This is readily obtained from (4) as a function of τ By examining the changes in the PDS due to suppression, we can readily see how much power has been introduced at any frequency, or frequency interval, of interest. The PDS also allows us

to examine the effect of non-repetitive modifications to the power signal, which would not manifest themselves as increases in harmonic content, but rather as a change within a band of frequencies. A classic example of this is the difference in the frequency spectra of an infinite sinusoid and that of a semi infinite sinusoid. Whereas all the power of the former is limited to one frequency (its PDS is an impulse) the PDS of the latter is spread out about its fundamental frequency. This spreading in the spectrum is the result of the single event of having turned on the sinusoidal generator at some instant, or alternatively, of having continuously suppressed the signal before then.

In order to determine the PDS of the power signal when a specific bit pattern is transmitted, observed that (4) may be written as

$$F_3(s) = G_0(s) + G_1(s) \tag{6}$$

where $G_1(s)$ is the second term on the right-hand-side of (4)

For an infinite binary sequence with 1's in bit positions $k_1, k_2, \ldots$, we have [1],

$$\begin{aligned} F_3(s) &= G_0(s)[1 - exp(-s\pi/\omega_0) + exp(-2\pi s/\omega_0 + \ldots] \\ &\quad + G_1(s)[exp(-sk_1/\pi\omega_0) + exp(-sk_2\pi/\omega_0) + \ldots] \\ &= \frac{\omega_0}{s^2 + \omega_0^2} + G_1(s)[exp(sk_1/\pi\omega_0) + exp(-sk_2/\pi\omega_0) + \ldots] \end{aligned} \tag{7}$$

Since transmission of a 0 does nothing to the power signal, a sequence of all 1s is, intuitively, one which produces the worst case distortion. For this case it is shown [1] that

$$\begin{aligned} F_3(j\omega) &= \frac{\omega_0}{\omega_0^2 + \omega^2} + \left(\frac{1}{\omega_0^2 - \omega^2}\right) \\ &\quad \cdot \left[\frac{cos(2\pi\omega/\omega_0) - 1 + j(sin(2\pi\omega/\omega_0) - 2sin(\pi\omega/\omega_0))}{2(1 - cos(2\pi\omega/\omega_0))}\right] \\ &\quad \cdot [\omega_0 - \omega_0 cos(\omega_0 t_i)cos(\omega t_i) - \omega sin(\omega_0 t_i)sin(\omega t_i) \\ &\quad - j\,\omega sin(\omega_0 t_i)cos(\omega t_i) - \omega_0 cos(\omega_0 t_i)sin(\omega t_i) \end{aligned} \tag{8}$$

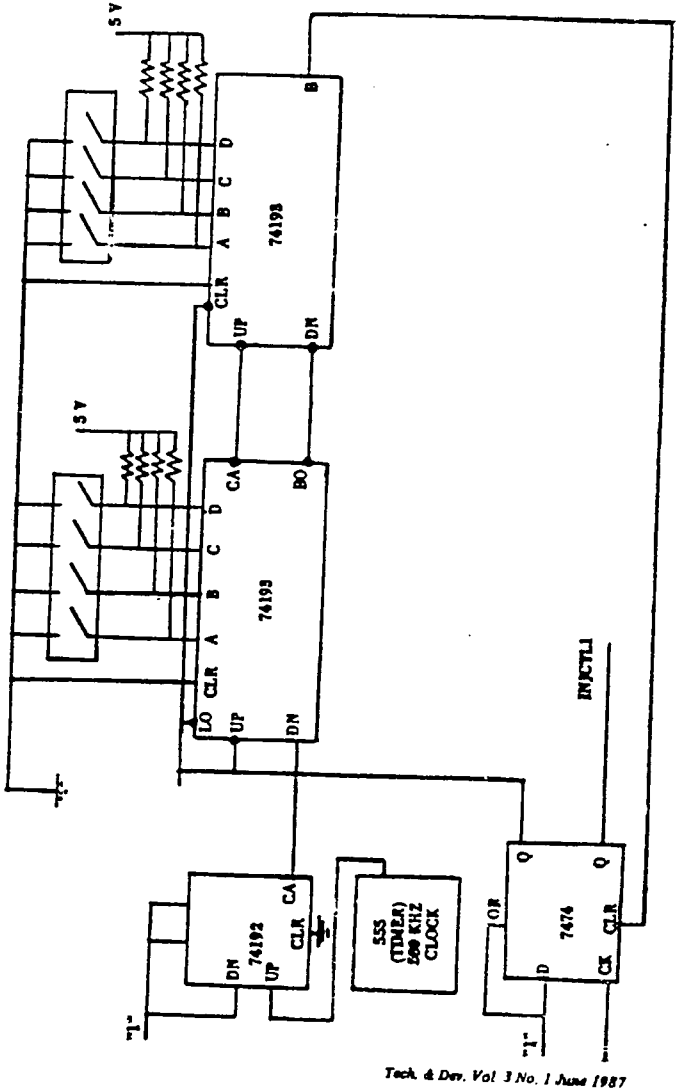

Fig. 2: Circuit for Varying Suppression Time

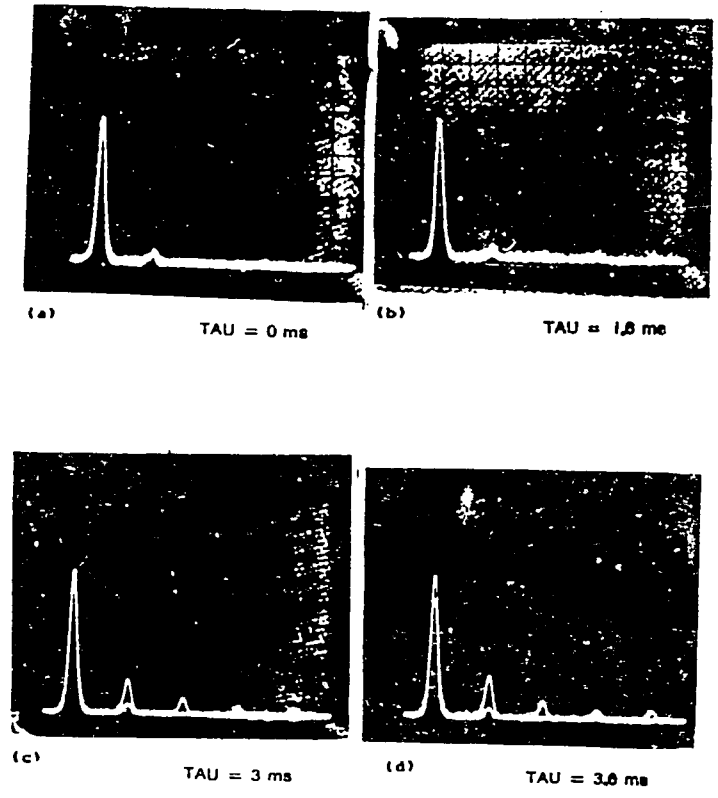

Fig. 3. a b c d Power Signal Spectrum with Tau as a Parameter

Curves for the magnitude of $f_3(j\omega)$ as a function of ω, with τ as a parameter, show that the spreading of the PDS of the power signal increases with τ [1]. This was verified, experimentally using an HP Model 3580A spectrum analyzer. Suppression time was varied using the circuit shown in Fig. 2. The results obtained are shown in Fig. 3. The horizontal scale in the pictures is 50Hz per major division and the left most vertical line corresponds to 0Hz. The vertical axis is calibrated in decibels (dB) with each major division representing 10 dB and with −100 dB at the bottom of the screen. Aside from the first, each picture shows two traces with one corresponding to the unmodified power signal.

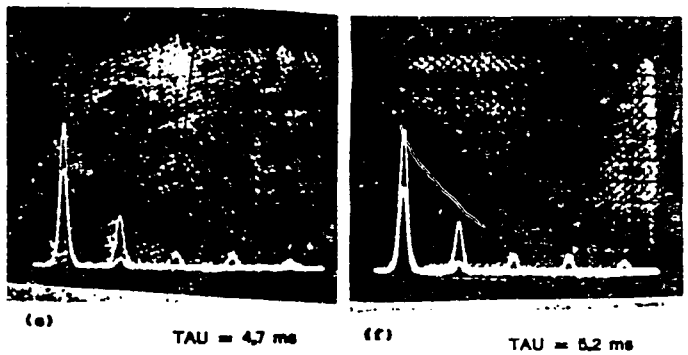

Fig. 3. e. f. Power Signal Spectrum with Tau as a Parameter.

Observe that, as expected, the unmodified power signal exhibits a spreading of its PDS about 50Hz, the nominal line frequency. Note too that, the peak does not occur at precisely 50Hz. Two effects jointly account for this spread: variation in line frequency and the departure of the wave shape from a strict sinusoid (see Fig. 4). Since the spectrum analyzer has a well-defined sampling time, the non-infite nature of the signal is of negligible effect. Note also the presence of a third harmonic in the mains signal.

At τ = 1.6ms, the major discernible change is the appearance of fifth, seventh and ninth harmonics. However, their total energy content is 1.9% of that of the fundamental. As τ increases, the power content of the fundamental decreases, while that of the harmonics increases. At τ = 5.2ms, the power in the fundamental is down by 32.8%, while that of the third harmonic is up by 483.3%. Note, however, that . = 5.2ms corresponds to suppression of better that one half of each half wave. A suppression time of 3ms results in a decrease of only 10.8% in the power content of the fundamental.

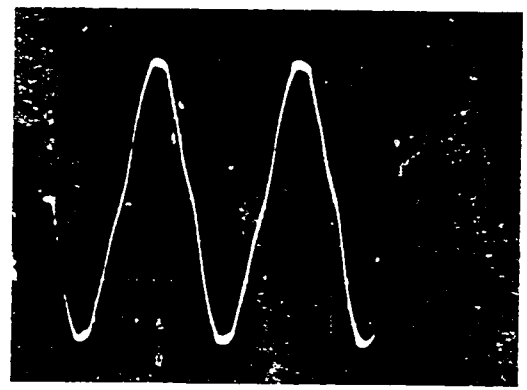

Fig. 4: Unmodified Power Line Voltage Waveform

INFORMATION DETECTABILITY

Information detectability as a function of τ was determined theoretically by assuming a given detector. The detector is a match filter. One sample of the line voltage, appropriately scaled and full-wave rectified, is taken and compared to a threshold value. The sampling instant is set so that it falls within the suppression interval. At this instant, a TTL D-type flip flop whose data input is the processed line voltage, is clocked. The output of the flip-flop is inverted to obtain the transmitted information bit.

We assume that only losses can occur on the transmission line. Although this is true, it does not necessarily mean that the voltage amplitude is monotone decreasing with distance. However, if we further assume that reflections are negligible, then the influence of the line on the encoded information is determined strictly by the losses encountered by $f_1(t)$ above. Let V_T be the threshold voltage of the match filter, and $t_0 (t_0 < .)$, the sampling instant. Time is measured from the instant of the most recent zero-crossing of the corresponding unmodified signal. The information is detectable at a distance z from the encoder if and only if,

$$t_0 \geqslant \frac{1}{\omega_0} \sin^{-1} \left(\frac{V_T}{A_0 e^{\alpha z}} \right) \qquad (9)$$

where α is the attenuation constant. t_0, as given by (9), is the minimum acceptable value for .

Type of line	Maximum length of line	Minimum value of	Percentage of energy dissipated
Single-phase 17000 and 15000 V	80km	1.3ms	1.4%
Three-phase 15,000 V	150km	1.3ms	1.4%
Three-phase 30,000 V	150km	1.3ms	1.0%
Three-phase 90,000 V	600km	0.9ms	0.5%
Three-phase 225,000 V	800km	0.9ms	0.5%

Table 2: Minimum Suppression Time of High Tension Lines in Cameroon (for a Specific Detector)

Using the values given in Table 1 to compute α, we obtain the minimum . values shown in Table 2 for various types of lines in Cameroon. The column at the right gives the percentage of the total power dissipated by suppression if an infinite sequence of 1s were to be transmitted with the corresponding value of At the values of $._{min}$ shown, information detectability is marginal in that any additional loss, no matter how small, will result in an encoded 0 being incorrectly decoded. To improve on this, . must be increased. The detectability of an encoded 0 in the case of a lossless line varies with , everything else remaining fixed, as shown in

Fig. 5. The relationship is non-linear, eventually saturating at $\tau = 5$ms. The phenomenon, however, is characteristic of the technology regardless of the specifics of the implementation.

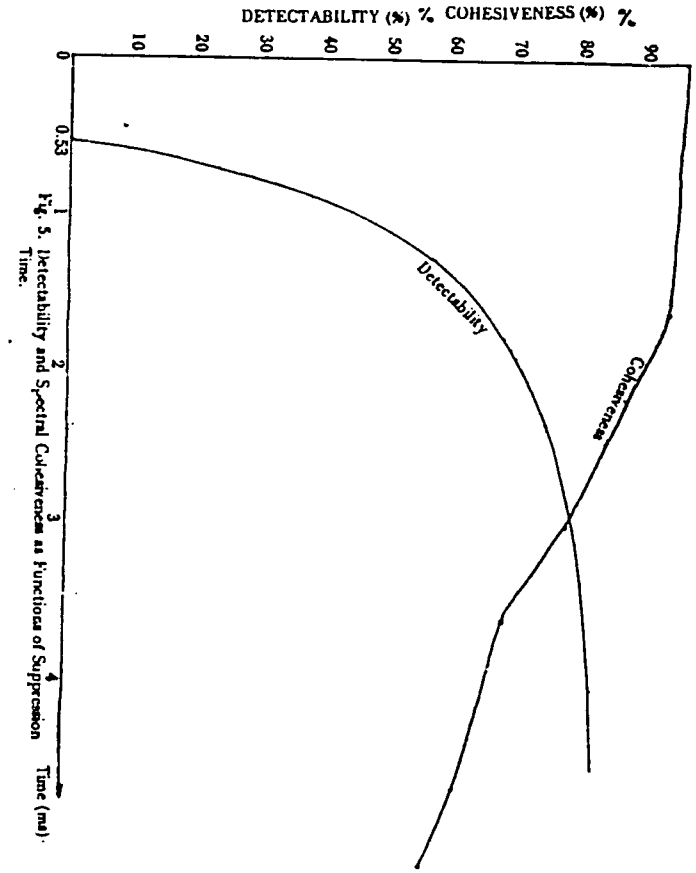

Fig. 5. Detectability and Spectral Coherence as Functions of Suppression Time.

CONCLUSIONS

Minimum accepted values for . have been discussed above for medium and high tension lines over distances as indicated in Table 2. Acceptable bounds for τ; in the case of a low tension line where due to the short distances losses are negligible, may be determined from Fig. 5. If we choose a criterion of 50% detectability (defined below) the minimum acceptable value of . is 1.1ms. Above this minimum value, the optimal choice of τ depends on the relative importance attached to information detectability and spectral distortion. In general we wish to maximize a joint performance index of the form

$$L = \alpha k_0 + \beta k_\theta \qquad (10)$$

where k_0 represents detectability and k_θ represents spectral cohesiveness. Information detectability is defined as the percentage change in the voltage amplitude which will result in an erroneous decoding of a transmitted 0 bit. Spectral cohesiveness is defined as the percentage of the total energy contained in the fundamental.

In (10) α and β are coefficients such that

$$\alpha + \beta = 1$$

From the data obtained in the low voltage simulation [4] (Fig. 5), we see that if detectability and cohesiveness are considered equally important we should choose τ = 2.0ms.

REFERENCES

1. Kwankam, S. Yunkap: *«Principles of a Digital Communication Scheme Using Power Waveform Modification»*, *Technology and Development* Vol 1, no 1. Dec. 1985 pp. 23–40.

2. Kedi, J.P.: *«Contribution c la Teleconduite Numérique de Réseaux d'Exploitation Electrique»*, Final-year project report E.N.S.P., University of Yaounde, June 1983.

3. Etoung, L.H. and Nyemeck, N.G.: *«Réalisation d'un Simulateur pour Transmission d'Informations Numériques sur Lignes Electriques»*, Final-year project report, E.N.S.P., University of Yaounde, June 1985.

4. Kwankam, S. Yunkap: Ngundam, I.M.: Ningo, N: Ntomambang and Ngamy, D.T., *«Low Voltage Simulation of a New Digital Power Line Communication Technology»*, ANSTI–EE 86 Electrical Engineering Conference, University of Dar es Salaam, Dar es Salamm Tanzania, Aug. 18–20 1986.

HYDRAULIC PARAMETERS OF HRU SOIL

by

S.I.A. Ojo & C.A. Obot

Hydraulics Research Unit University of Lagos

ABSTRACT

This paper reports a case study of the determination of the soil hydraulic parameters for surface soils of the Hydraulics Research Unit, University of Lagos Campus. The overriding parameter was found to be the hydraulic conductivity of the soil, denoted by k. Both laboratory and field tests were employed in its determination.

It was found from the study that the hydraulic conductivity can be represented by the equation:

$$k = k(c, d^2, e)$$

indicating the effect of the shape of the particles c, the grain size d and the void ratio e, on the sample's conductivity. In this study, the effective grain sizes ranged from 0.009mm to 0.0015mm in diameter. Using similar sample tubes of dimensions 100mm diameter by 127mm length, hydraulic conductivity values varying from 5.2×10^{-3} mm/s to 117.63×10^{-3} mm/s (for field tests) and 1.0×10^{-3} to 22.6×10^{-3} mm/s (for laboratory tests) were obtained.

NOTATION

Unless otherwise stated the following underlisted symbols have the following meanings:

A – Area (m^2)

C_D – Drag coefficient

H – Pressure head (m)

N_R – Reynold's number

Q – Water discharge (m^3/s)

S_s – Specific gravity of soil particle

V – Velocity (m/s)

PROGRESS REPORT

ON

PROJECT NO. 5.204 - DIGITAL INFORMATION TRANSMISSION ON ELECTRIC POWER LINES

PREPARED BY

PROF. S. YUNKAP KWANKAM

AUTOMATION AND CONTROL LABORTORY

Ecole Nationale Superieure Polytechnique

B.P. 8390 YAOUNDE Cameroon Tel: (237) 32-12-26 Telex: 8384 KN

April 1987

Rec'd in SCI: NOV 4 1988

INTRODUCTION

The project document was signed on June 28 1985. According to this document, progress reports were to have been submitted within thirty days of the following dates: December 31, 1985; June 30, 1986; and December 31, 1986. This has not been done for the reasons given below.

The PERT chart in the work plan indicates times with respect to the date of availability of the neccessary equipment. The first batch of project equipment, purchased in the US in August/September 1985, was delivered on December 24, 1985. There were also some delays in getting the space allocated to the project prepared for installation of the equipment. The result of all this was that the experimental aspects of the project did not begin until February 1986. The first report was therefore written in March 1986 and represented results, some of which were already obtained, but mostly anticipated.

In the absence of any guidelines, the report was written in a summary format by the Principal Investigator (PI). The PI also indicated in his covering letter that should the format be found inadequate, he would redo the report according to the guidelines provided. Fred J. Bieganski's letter of February 12 1987, to the PI is the first official reaction to the report.

PROGRESS MADE IN WORK PLAN

Before undertaking a hardware simulation of the proposed technology at nominal power line voltages and currents, it was deemed necessary to carry out a low volatage simulation. The advantage offered by a low-voltage simulation was that the encoder and decoder systems could be mastered without delving into problems posed by operation at the nominal values, since these systems remain essentially unchaged even at high voltages and currents.

A low-voltage simulation was realized and used to test the physics of the scheme. Details of the simulation appear in the paper entitled " Low Voltage Simulation of a New Digital Power Line Communication Technololgy", see Appendix 1.

The next step was to implement the encoder and decoder systems using microprocessors, as opposed to the discrete logic circuits of the low-voltage simulation. These s ,stems are now implemeted using the Motorola MEK68020S single-board microcomputer. This has enabled easy modification of system parameters such as suppression time, and the study of their effect on detectability and spectral distortion. The results

obtained for the low-voltage simulation, which appear in the paper entitled "Parameter Bounds for a New Power Line Communication Technique Using Waveform Modification", (Appendix 2) have also been obtained at the nominal line voltage of 220 volts.

The low voltage simulation exploited the voltage suppression scheme in the control mode; i.e. loads were controlled remotely from a given point. With the microprocessor implementation, a data transfer and a spectrum analysis mode have been added. In addition an interface for the MEK6802D5 has been realized which permits blocks of data to be transferred from a microcomputer with secondary storage, through the parallel printer port, into the MEK6802D5 for serialization and transmission. A paper based on the abstract shown in Appendix 3, is in preparation.

The interface between the encoder and the power line is the injection circuit. This is what causes suppression of the line voltage for a fixed time beginning with the zero crossing, when a binary 1 is transmitted. Three types of injection circuits have been examined, but only one in detail as indicated in the paper entitled "Injection Methods in a Digital Communication Scheme Using Power Signal Waveform Modification", see Appendix 4. We have fixed on parallel injection. Two configurations are possible; parallel injection with a series pass element, and parallel injection with a shunt element. Currently, only the series pass element configuration has been implemented.

In terms of the work plan these results represent the accomplishment of only items 1, 2, 3, 5 and 6 of Phase 1 of the project. However, from what we now know, they represent better than one half of the effort and time required to accomplish all the objectives of the project, contrary to what is indicated in the PERT chart. Phase 2 work, for example, simply depends on the presence of a reflected wave and the detection of positive and negative peaks as opposed to positive- and negative-going zero-crossings. The implementation of the encoder and decoder using single-board microcomputers should reduce Phase 3 work to primarily that of assembler language programming. A revised schedule is shown below.

EXPENDITURE

Out of a total budget of One hundred thirteen thousand five hundred forty-four dollars ($113,544) a total of about forty-two thousand seven hundred seventy-six dollars ($42,776) has been spent. The expenditure breakdown is as follows:

- Equipment - $31,129

- Technician salaries - $ 9,192

- Overhead - $ 2,455

* CFA expenses have been converted to US dollars at 350 f/$

OUTPUT SO FAR

The following quantifiable outputs have been obtained, so far, from the project:

- 3 papers, presented at ANSTI-EE 86 International Electrical Engineering Conference, Dar es Salaam, Tanzania, Aug. 18-20, 1986; and one abstract, (The paper on parameter bounds will also appear in Vol. 3 no. 1 of the journal Technology and Development)

- a low-voltage simulation of the technology,

- a 220-volt implementation of the technology for unidirectional communication from generator to load.

Unquantifiable outputs include a significant amount of institution strengthening. The facilities provided through the project are the main equipment support of the Automation and Control Laboratory (ACL) of the Ecole Nationale Superieure Polytechnique (School of Engineering) of the University of Yaounde. The ACL currently numbers ten full-time faculty members of the Electrical Engineering Department, and two associated researchers from outside the Polytechnique. The ten faculty members represent two thirds of the Electrical Engineering faculty and one sixth of the total Polytechnique academic staff. Most of the output of the ACL (see enclosed brochure) is directly or indirectly related to the facilities provided through the project. These outputs have in turn attracted other grants and activities to the Laboratory.

DIFFICULTIES ENCOUNTERED

We have encountered two types of difficulties, one technical and the other logistic. The technical difficulties have to do with the supply of equipment and components.

The unavailability of certain electronic components in Cameroon has caused long delays in the project. In electronics work one cannot determine in advance, all the types of components that will be required on a project. The possibility of easily picking up components as the need arises must therefore exist if the project is not to be subjected to severe delays. This is not the case in Yaounde.

Some components have had to be ordered from the US. And because the quantities are very small, the orders are not of commercial interest to most suppliers. Those isolated suppliers who are willing to handle such small orders are in no big hurry to fill them either. The project has therefore sufferred severe delays particularly as concerns the realization of the injection ciucuits. Technical details on these difficulties are given in Appendix 5.

The second type of difficulty encountered is logistical support, primarily transportation. Lengthy arguments were advanced in October 1985 as to why a transportation component should be included in the supplemental budget (see Appendix 6 for excerpt). This aspect of the request was not approved. Those items which have been purchased locally have therefore necessitated the absence of some member of the research team every time a purchase is made. And given the impossibility of calling in advance to determine availability, some outings have been tours of the city.

In addition to this expenditure in time, justifiable expenses have been incurred which, unfortunately, cannot be documented in a manner acceptable for reimbursement. Cameroonian taxi drivers and bus drivers do not give receipts. And when the PI's personal vehicle is used, there is no way of documenting this other than by odometer readings. It is not clear if and how these readings translate into project dollars. So, no claims have been made. Finally, receipts from purchase of gasoline are inappropriate since the vehicle is not used exclusively for project activities.

MODIFIED WORK PLAN

The work plan is essentially unchanged. What has changed is the schedule. The modified schedule is as shown in the PERT chart attached.

CONCLUSION

The scientifique basis for the proposed technology is sound. We therefore continue to hold high hopes for this project, despite the difficulties we have encountered. These all stem from working with fairly sophisticated devices in an environment which lacks the support system - in this case primary and secondary sources for components - on which advanced technologically must rely.

REVISED ACTIVITIES SCHEDULE

April 1987

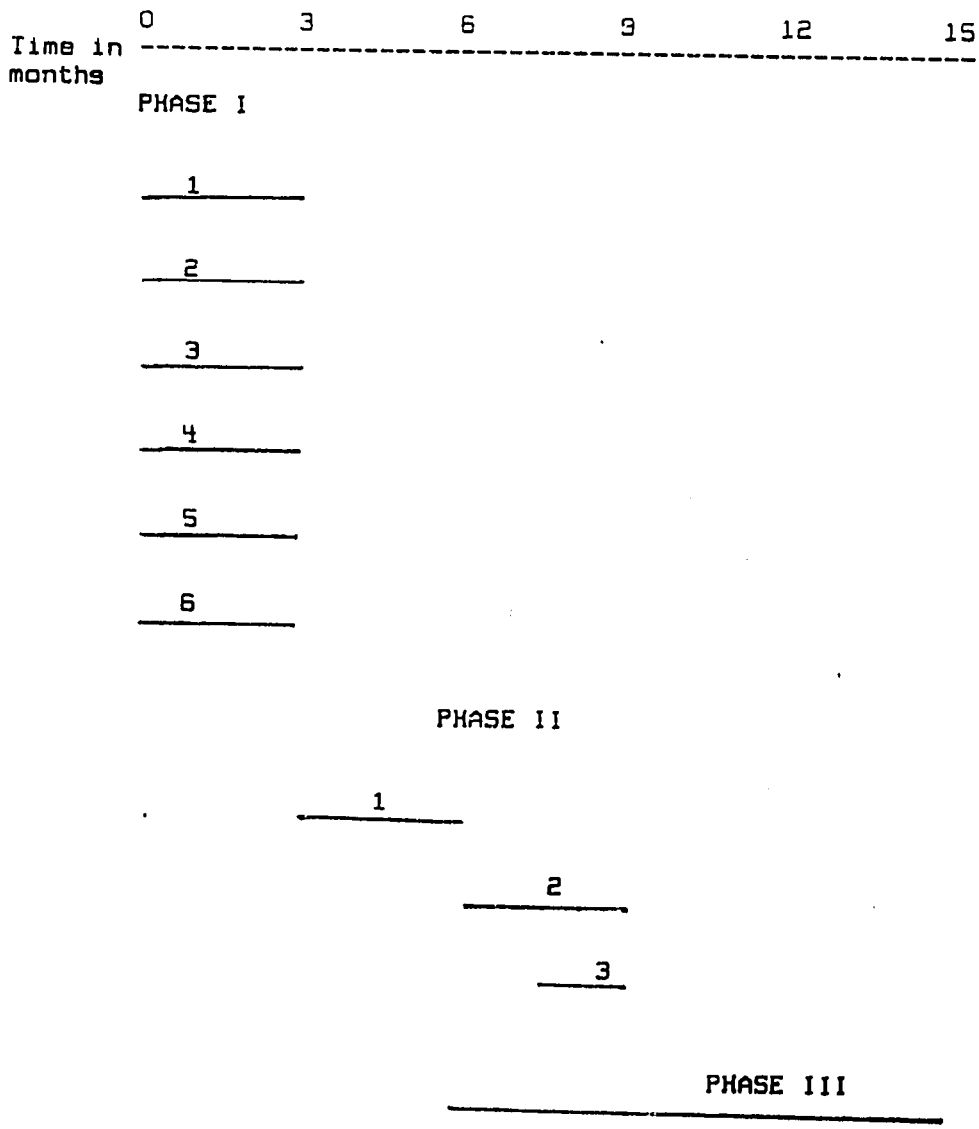

A MULTILEVEL MULTIPROCESSOR SYSTEM FOR AUTOMATIC DATA LOGGING IN A NEW DIGITAL POWER LINE COMMUNICATION SCHEME

by

S. Yunkap Kwankam, N. Ntomambang Ningo and F. Nematchoua
Automation and Control Laboratory
Ecole Nationale Supérieure Polytechnique
University of Yaoundé

SUMMARY

The robustness of a technique for transmitting digital information on electric power lines using waveform modification first suggested by Kwankam [1], and implemented by Kwankam et al [2], is tested by measuring its immunity to voltage amplitude variations, frequency fluctuations, and voltage waveform changes. As transmission rate is only 100 bits per second, (limited by the number of zero-crossings per second) a system for unattended transmission, reception and automatic error logging becomes imperative, if statistically significant amounts of data are to be logged.

The system is a multilevel, multiprocessor data logger. Text resident in a file in a microcomputer (an AT&T PC 6300) is down-loaded 8 K bytes (characters) at a time to a Motorola MEK6802D5 single-board microcomputer. The 6802 board then introduces parity and other bits appropriate to the protocol used, and transmits the characters out on a power line. Transmission is bit-serial. At the receiving end, a receiver-decoder implemented on another Motorola MEK6802D5, recovers the individual bits, checks for any errors and assembles them into characters. The assembled characters are then uploaded, again 8 K bytes at a time, to another AT&T PC 6300 microcomputer. The microcomputer, in turn, saves the received text in another disk file.

On downloading, communication between the PC 6300 and the 6802 is through the parallel printer port of the former and the peripheral interface adapter (PIA) of the latter. Thus a data transfer rate of 50,000 bits per second (limited by the 4-MHz clock of the 6802) is readily acheived without additional hardware. This is significantly higher than higher than the 9,600 baud available through the use of the serial port and thus frees up the the PC 6300 to perform many other tasks in batween servicing the 6802 on an interrupt basis.

Uploading is done by means of an interface, using minimal hardware, which occupies one of the slots on the second PC 6300 and the IN instruction in an assembler language code. The control programs in both PC 6300s are written in BASIC. Data transfer rate on uploading is about 20,000 bits per second.

The system is capable of logging data continously, until the source disk is empty (and the destination disk is full). For floppy disk files, this takes about 10 hrs, whereas for files on 10MB hard disk systems, data transfer can go on for 275 hours non-stop. Using this system, the robustness of the communication technology has been thoroughly tested with minimum human intervention. Its adaptation to other environments where unattended data logging is unavoidable is straight-forward

APPENDIX 5

Parallel injection with a series pass element means that the load current flows through the switching device, in this case a thyristor. The thyristor is fired at the zero-crossing to transmit a 0, or is fired after a delay corresponding to the suppression time, to transmit a 1. In the latter case, the voltage waveform is therefore suppressed as required by the theory. However, the current flowing through the line depends on the nature of the load. Specifically, when the load is resistive, the thyristor current goes to zero at the voltage zero. Thus the voltage waveform at any point downstream of the point of injection shows suppression beginning at the zero-crossing. If the total load is not resistive, there is a phase shift between voltage and current. The thyristor current does not go to zero at zero voltage, but some time before or thereafter accordingly as the load is capacitive or inductive. In our case the load is inductive. Voltage suppression therefore starts some time after the zero-crossing; the more inductive the load, the later this occurs.

Suppression can be returned to the zero-crossing by phase compensation. A capacitive load is connected in parallel with the inductive load. The capacitive load is chosen so that it resonates with the inductive load at the line frequency, 50 Hz in this case. The small inductance values of the load, when a transformer is used to tap of the modified signal for detection purposes, require unmanageable capacitance values (around 1 F). To reduce this to obtainable values, transformer-coupled capacitance compensation has been employed. A second transformer has been used, whose net effect is to "multiply" the capacitance - as seen from the primary side (the line) - of the capacitor connected across its secondary. This has worked quite well in terms of reducing the displacement of the suppression from the zero-crossing. However, minor problems still exist beacuse the suppressed portion of the signal is not flat (zero). This simply translates to a more elaborate detection algorithm in the microprocessor-implemented decoder.

All of this could be avoided by using a shunt element configuration in the parallel injection circuit. This can be done with either a gate turn-off (GTO) device, or a transistor. Use of a thyristor would imply forced commutation and therefore voltage suppression would not be total. We have not been able to find either a GTO device or a high-volatage swithching transistor (which does not have a free-wheeling collector-emitter diode), locally. We have therefore had to order these. And given the insignificant total dollar value of the purchase we have the delays indicated above.

INJECTION METHODS IN A DIGITAL COMMUNICATION SCHEME USING POWER SIGNAL WAVEFORM MODIFICATION

by

S. Yunkap Kwankam, J.M. Ngundam, S. Tchouate, F. Nematchoua, E. Ondoua and Awono Onana

Automation and Control Laboratory
Ecole Nationale Superieure Polytechnique
University of Yaounde
YAOUNDE
Cameroon

This research has been carried out under a grant from the United States Agency for International Development (USAID) under its Program for Science and Technology Cooperation (PSTC): AID project no. 936-5542, proposal no. 5.204

Abstract

This paper presents the results of investigations into three methods of achieving power line signal suppression in a new digital communication scheme which uses power signal waveform modification. The methods are: (1) series injection through mutual induction of a 180-degree phase-shifted version of the mains, (2) series injection by use of a third winding on a transformer as the control input, and (3) parallel injection by use of both shunt and series pass semiconductor switching elements. In each case, the efficiency of the method is measured as the amount of suppression for a given modulating signal of known power.

Parallel injection using either thyristors or transistors is shown to be far more efficient than the series injection methods.

INTRODUCTION

In a new digital communication scheme advanced by Kwankam and others [1-3] the power signal waveform is modified to encode a binary 1. Modification consists of suppressing the signal for a fixed duration beginning with the zero-crossing. This paper reports on the experimental investigations of three methods of achieving signal suppression. In each case the efficiency of the method is measured as the amount of control signal power required to suppress a given power line signal for a fixed duration.

SERIES INJECTION

Consider two electromagnetically coupled circuits as shown in fig. 1 [4]. We are interested in the conditions under which there is a net transfer of energy from one circuit to another. It can be shown that for currents i_1, and i_2 with a variable phase angle difference one circuit will provide more energy to the other than it receives from it, for some value of the phase angle difference. The currents are,

$$I_1 = I_1 e^{j(wt + \theta 1)} \tag{1}$$

$$I_2 = I_2 e^{j(wt + \theta 2)} \tag{2}$$

The complex power due to the coupling is ,

$$\bar{S}_1 = \bar{V}_1 I_1^* = jwMI_2I_1e^{j(\theta 2 - \theta 1)} \tag{3}$$

$$\bar{S}_2 = \bar{V}_2 I_2^* = jwMI_1I_2e^{j(\theta_1 - \theta_2)} \tag{4}$$

where

* means complex conjugate

(3) and (4) may be written as

$$\bar{S}_1 = wMI_2I_1 \sin(\theta_2-\theta_1) + jwMI_2I_1 \cos(\theta_2-\theta_1) \tag{5}$$

$$\bar{S}_2 = wMI_2I_1 \sin(\theta_2-\theta_1) + jwMI_2I_1 \mathrm{COS}(\theta_2-\theta_1) \tag{6}$$

Clearly, $\bar{S}_1 = -S_2^*$.

Active and reactive power are given by

$$P_i = -P_2 = wMI_2I_1 \sin(\theta_2-\theta_1)$$

for active power, and

$$\theta_1 = \theta_2 = wMI_2I_1 \cos(\theta_2-\theta_1)$$

for reactive power

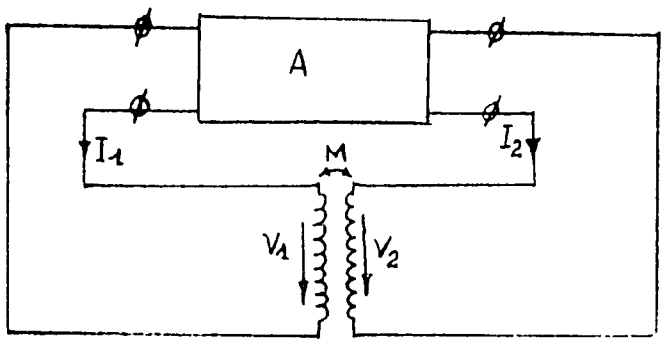

Fig. 1. Two electromagnetically coupled circuits

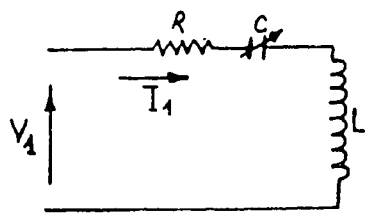

$$Z = R + (L\omega - 1/C\omega)$$

Fig. 3. Phase shift regulation circuit

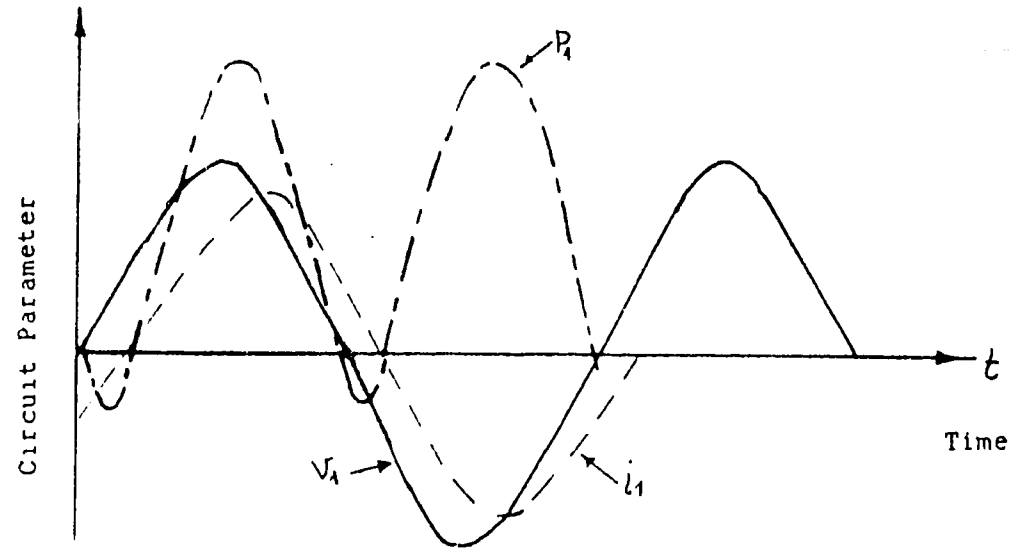

(a)

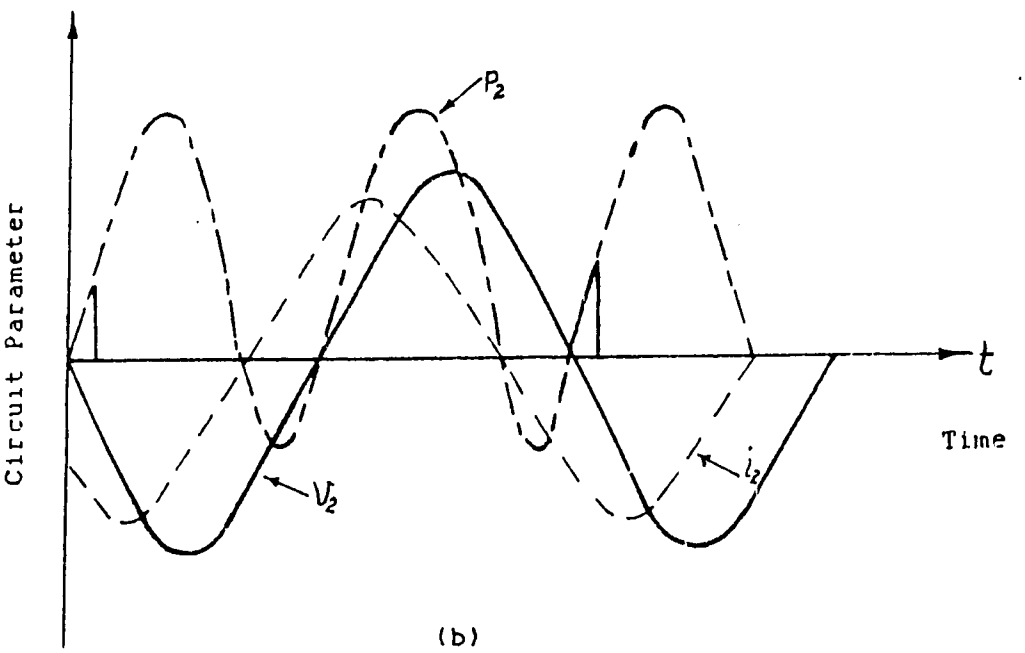

(b)

Fig. 2. Instantaneous circuit variables for:
(a) power line: (b) injecting circuit

Depending on the time interval considered, energy transfer could be positive or negative. Positive power transfer means that there is a net transfer of energy from the source considered while negative power means a net transfer of energy to the source considered.

If $\theta_1 - \theta_2 < 0$ then $P_1>0$ and $P_2<0$. Therefore the first circuit is transfering power to the second circuit. On the other hand if $\pi>\theta_2-\theta_1>0$, then $P_2>0$ and $P_1<0$. The roles of the circuits are then reversed. Now suppose that the first circuit is a power line and the second is a circuit injecting energy into the power line. Then we have,

$$\begin{aligned} V_1 &= V_o \sin wt \\ i_1 &= I_1 e^{j(wt-\theta 1)} \end{aligned} \tag{7}$$

$$\begin{aligned} V_2 &= -V_1 \sin wt = -V_1 \sin(wt+\pi) \\ i_2 &= I_2 e^{j(wt+\pi+\theta 2)} \end{aligned} \tag{8}$$

For the injection circuit to transfer, power to the line, we must have,

$$\pi > \theta_2 + \theta_1 > 0$$

Maximum power transfer therefore occurs when $\theta_2 = \pi/2 - \theta_1$. Generally, in a well regulated system, the power factor is of the order of 0.8, with a value of $-\pi/6$[1] for θ_1.

Figure 2 shows the instantaneous power P_1 of the power line and the power P_2 of the injecting circuit. Notice that P_1 is negative and P_2 is positive at the moment of signal suppression.

A circuit which may be used to provide phase shift regulation is shown in Fig. 3.

The coupling between the circuits of Fig. 1 is limited by the fact of the flux linking them having to pass through air, a low pemeability medium. In a bid to decrease the losses in the flux linkage between the circuits, we conceived a three-winding transformer, showm in Fig. 4.

THREE WINDING TRANSFORMER

We have a magnetic circuit on which there are three separate windings:

a primary winding with n_1 turns,

a secondary winding with n_2 turns, and

a tertiary winding with n_c turns.

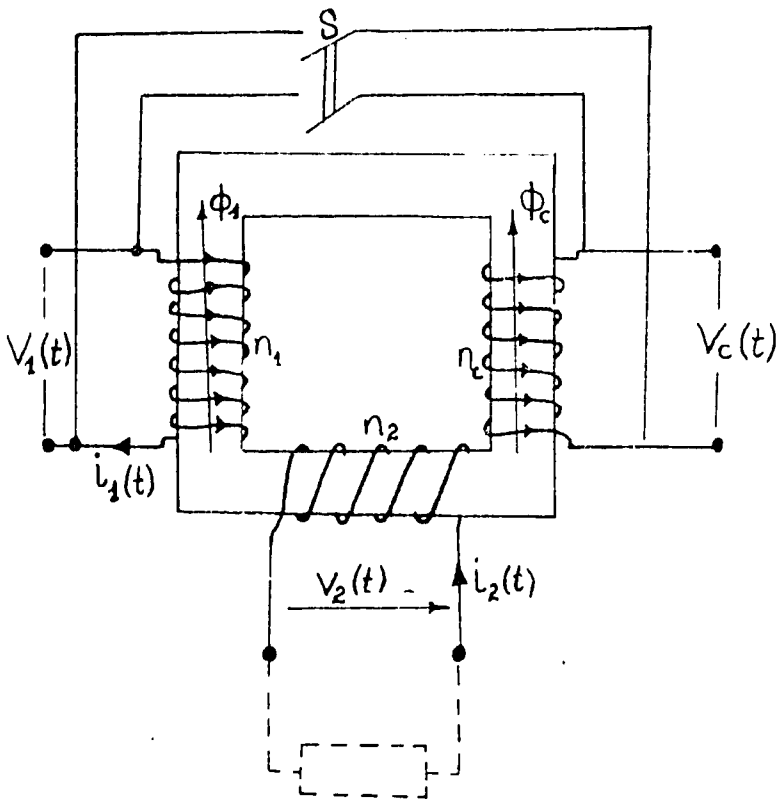

Fig. 4. Three-winding transformer for injection control

The primary and tertiary windings are wound in opposite directions with $n_c = n_1$. When S is open, the system operates as an ordinary two winding-transformer. Let us examine this case in more detail.

$$V_1(t) = V_{1m} \cos \omega t \tag{9}$$

In the magnetic circuit we have

$$V_1 = -e_1 = n_1 \frac{d\theta_o}{dt} \tag{10}$$

where

θ_o is the open circuit value of the flux, and is given by,

$$\theta_o = \frac{V_{1m}}{n_1 \omega} \cos(\omega t - \pi/2) \tag{11}$$

We notice therefore that at constant frequency, the flux depends only on the voltage.

At the terminal of the secondary winding we have,

$$V_2 = 1_2 = -n_2 \frac{d\theta_o}{dt} \tag{12}$$

When the switch S is closed we have

$$V_1 = jL_1 \omega I_1 + jM\omega I_2 \tag{13}$$

$$V_2 = -jL_2 \omega I_2 - jMeI_1 \tag{14}$$

$$n_1 I_1 + n_2 I_2 = n_1 I_{10} \tag{15}$$

At open circuit (i_2=0) with switch S closed a second flux opposite to the first is produced as a result of current flow in the tertiary winding. Thus

$$\Phi = -\Phi_o = \frac{V_{im}}{n_i \omega} \cos(\omega t - \pi/2) = \frac{V_{im}}{\omega} \cos(\omega t - \pi/2 + \pi)$$

$$= \frac{V_{im}}{n_i m} \cos(\omega t + \pi/2) \tag{16}$$

The resultant flux in the magnetic circuit is theoretically zero.

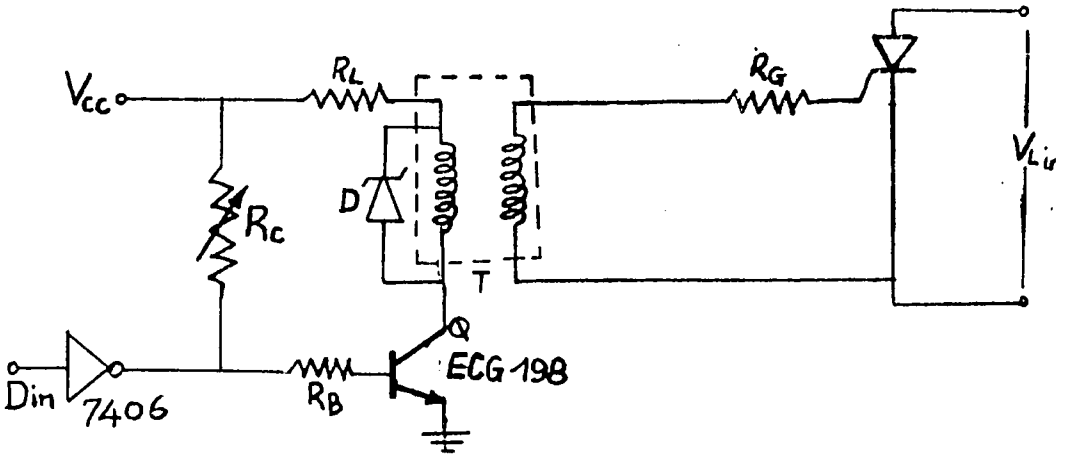

R_L = 27 Ω 5 W

D = IN5341B

R_B = 12 Ω

R_C = 330 Ω

R_G = 10 Ω

T = (Schaffner) IT 313 .

Fig. 5. Control circuit for parallel injection

RESULTS AND CONCLUSIONS

We may define the inefficiency n of a particular injection method as the amount of injected power required to suppress a given amount of line power, as a percentage of the latter. The results obtained show that the parallel injection methods are the least inefficient while the series methods are the most wasteful. The computations show that the series injection method requires at least as much power to be injected as that which is to be suppressed, not counting losses. In the three winding transformer, these losses are such that when the inputs to the two primaries exceed 120V, it requires an additional 10% of the power signal to obtain total suppression. On the contrary, the injected power in the case of the parallel methods may be considered as the total d.c. power dissipated by the circuits driving the gate in the case of an SCR or base in the case of a transistor. This was measured to be around 18W. The line voltage suppressed was 220V rms. Assuming a minimum load current of 10A and that suppression time is 2 msec on a 50Hz line, we find that the inefficiency is a scant 8%.

REFERENCES

1. Kwankam, S. Yunkap: "Principles of a Digital Communication Scheme Using Power Signal Waveform Modification". Technology and Development, Vol. 1, no. 1. Dec. 1985, pp 23-40.

2. Kwankam, S. Yunkap: Ngundam, J.M.: Ningo, N.N. and Ngamy, D.T.: "Low Voltage Simulation of a New Digital Power Line Communication Technology": ANSTI-EE 86 Electrical Engineering Conference. University of Dar es Salaam, Dar es Salaam, Tanzania, August 18-20 1986.

3. Kwankam, S. Yunkap: Ningo, N.N.: Bilikha, J.B. and Ngamy, D.T.: "Parameter Bounds for a New Digital Power Line Communication Technique Using Waveform Modification": ANSTI-EE 86 Electrical Engineering Conference, University of Dar es Salaam, Dar es Salaam, Tanzania, Aug 18-20 1986.

4. Etoung, L.H. and Nyemeck, N: "Realisation d'un Simulateur pour Transmission d'Informations Numeriques sur Lignes Electriques", final-year project report, E.N.S.P., University of Yaounde. June 1985.

5. Mak, S.T. and Moore, T.G. Jr.: "TWACS, a New Viable Two-Way Automatic Communication System for Distribution Networks. Part II: Inbound Communication", paper 84 WM 182-2 IEEE Power Engineering Society Winter Meeting, Dallas, TX. Jan 29 - Feb 3, 1984.

6. Mak, S.T.: "A new Method of Generating TWACS Type Outbound Signals for Communication on Power Distribution Networks", paper 84 WM 181-4 IEEE Power Engineering Society Winter Meeting, Dallas, TX. Jan 29 - Feb 3, 1984.

PROJECT NO. 5.204 "DIGITAL INFORMATION TRANSMISSION ON ELECTRICAL POWER LINES"

PROGRESS REPORT March 4, 1986

This report covers progress made on the project since the grant document was signed on June 28th 1985.

Purchase of equipment

The principal investigator took advantage of his visit to the U.S., as a Fulbright Visiting Scholar during the summer of 1985, to purchase most of the basic equipment needed by the project. These included, the computer systems, the spectrum analyzer, and sufficient components to complete the low voltage simulation of phase 1 of the proposal.

Experimental Work

A hardware implementation of the technology on a low voltage (30-volt) line has been completed. Two lamps connected to the same 30-volt source are independently controlled by two switches using the technique.

Work continues on various injection methods, where parallel injection using a pass thyristor seems to be the most promising.

Publications

One paper (see appendix 1) has been published on the principles of the technology. Four other manuscripts are in preparation for the ANSTI - EE '86 Electrical Engineering conference scheduled for August 1986 in Dar es Salaam (see appendix 2).

Supplemental Budget

A supplemental budget of $46,350, was requested in October 1985. Of this amount $24,500 was recommended for approval. Further purchase of equipment awaits final approval of this budget supplement.

Rec'd in SCI: NOV 4 1988

Because A is a real matrix we have

$$A = A^* \text{ then}$$

$$(I^*_{Bus})^T = (\bar{i}^*)^T A \tag{B6}$$

Substituting (B6) in (B4) we have

$$(\bar{i}^*)^T A E_{Bus} = (\bar{i}^*)^T \bar{V}$$

From which

$$A E_{Bus} = \bar{V} \tag{B7}$$

REFERENCES

1. Ebanja, J.M. "Load Flow Analysis of Unbalanced 3ϕ Systems". Master's Thesis, Clarkson College, Potsdam, New York.
2. Ebanja, J.M. and Hamman, M.S. "Modification of the Network Bus Impedance Matrix". Proceedings Paper – Midwest Power Symposium, Ann Arbor, Michigan, Oct. 1971.
3. Ebanja, J.M. "Research Topics for 1983/84". Annual Report on Research Work, ENSET – CUD, Douala, April 1984.
4. Staff, G.W. and El-Abian, A.H., *Computer Methods in Power Systems Analysis*, McGraw-Hill, 1968.

PRINCIPLES OF A DIGITAL COMMUNICATION SCHEME USING POWER SIGNAL WAVEFORM MODIFICATION

S. Yunkap Kwankam
Automation and Control Laboratory
Ecole Nationale Superieure Polytechnique
University of Yaounde

ABSTRACT

Recently, attempts have been made to develop communication technologies based on the use of the 50- or 60- Hz power signal as the carrier. Digital communication schemes based on this principle include flattening of the waveform tops, and modulation of the location of the zero crossings.

The Yaounde scheme is described in detail. Here, binary information is encoded as the presence or absence of the power signal on the line during a well-defined interval beginning with each zero crossing. A 1 is encoded by suppressing the signal, and a 0 by leaving the signal unmodified.

Principles of the encoder are described, followed by spectral analysis of the modified power signal. Two methods of detecting the encoded binary sequence are described in detail. Criteria and relationships governing the choice of parameters are given. The differentiation method is shown to be better for minimizing spectral distortion of the power signal.

RESUME

Des tentatives ont été faites récemment pour développer des technologies de communication utilisant un signal de puissance de 50 ou 60 Hz comme porteur. Des projets de communication digitale se fondant sur ce principe, incluent l'applatissement du sommet des formes d'onde et la modulation de la position aux croissements à zero.

This research was partially funded by grant (contract) no. SC/RP 561.230 from UNESCO, PARIS. It is being continued through a grant from the United States Agency for International Development (USAID) under its Program for Science and Technology Cooperation (PSTC); AID project no. 936-5542, proposal no. 5.204.

Nous avons décrit en détail une méthode ou l'information binaire est codée par la presence ou l'absence du signal de puissance sur la ligne pendant un intervalle bien defini commençant à chaque croisement à zéro. On code 1 en supprimant le signal et 0 en ne le modifiant pas.

Les principes de l'encodeur que nous avons décrits sont suivis d'une analyse spectrale du signal de puissance modifie Deux methodes de détection de la sequence binaire codee ont été également décrites en détails. Les criteres et les relations qui determinent le choix des paramètres ont été donnes. La différentiation apparaît comme etant la meilleure methode permettant de minimiser la distortion spectrale du signal de puissance.

INTRODUCTION

The need for transmitting information on electrical power lines has existed ever since the advent of electrical power distribution networks. Since control functions need to be exercised at various points in the network, for load management, fault isolation and other purposes, it is economically advantageous to use the wires themselves as the communication link. This idea was advanced as early as 1898, by Routin and Brown [1].

There are currently two basic approaches to exploiting this idea. The traditional approach, in operation since the late 1920's, has been through the use of ripple control communication systems [2]. In these systems, narrow-band (1-20 Hz) pulses with carrier frequencies between 100-1000 Hz are injected into the power lines at distribution substations. The same principle of carrier-borne signal injection is used for voice communication between stations on power networks [3].

More recently, attempts have been made to develop communication technologies based on the use of the 50- or 60-Hz power signal as the carrier. Direct waveform modification schemes for digital communication include flattening of the waveform tops [4], and, modulation of the location of the zero crossing [5]. The latter scheme was developed by Arthur D. Little, Inc. of Cambridge, Massachusetts.

THE YAOUNDE SCHEME

The scheme described in this paper is currently under investigation at the Ecole Nationale Supérieure Polytechnique, of the University of Yaounde. Here, binary information is encoded as the presence or absence of the power signal on the line, during a

well-defined interval beginning with each zero crossing. A 1 is encoded by suppressing the signal, and a 0 by leaving the signal unmodified, as shown in Fig. 1.

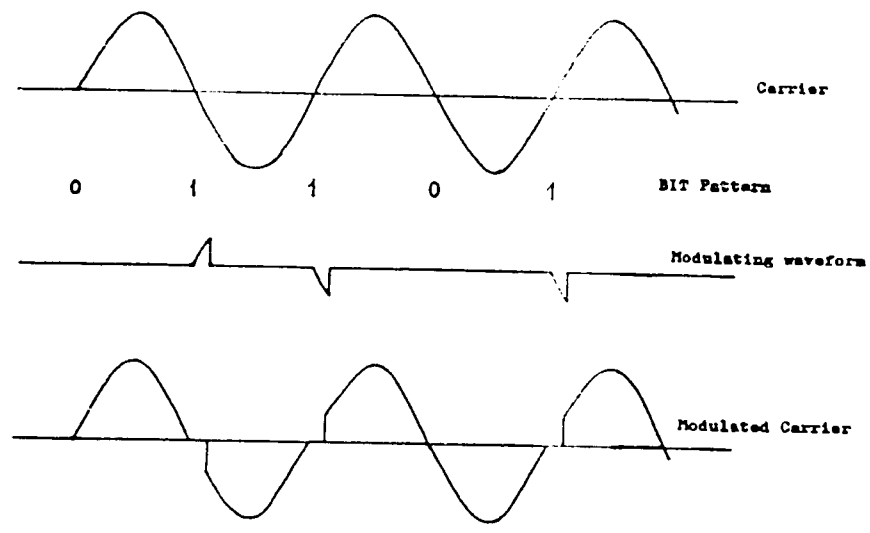

Fig. 1. Typical Waveforms in the Yaounde Scheme

Aside from the need for originality, this research is motivated by a major shortcoming of the ADL scheme. Modulation of the zero crossings of the power signal is predicated on the assumption that the line frequency is very tightly controlled. This is not the case in the local electrical environment in Cameroon. Informal measurements have shown that line frequency varies between 48 and 52 Hz [6]. The Yaounde scheme is workable no matter what the line frequency variations are. In addition, it is not dependent on the form of the power signal, as long as this signal is strictly monotone around the zero crossings.

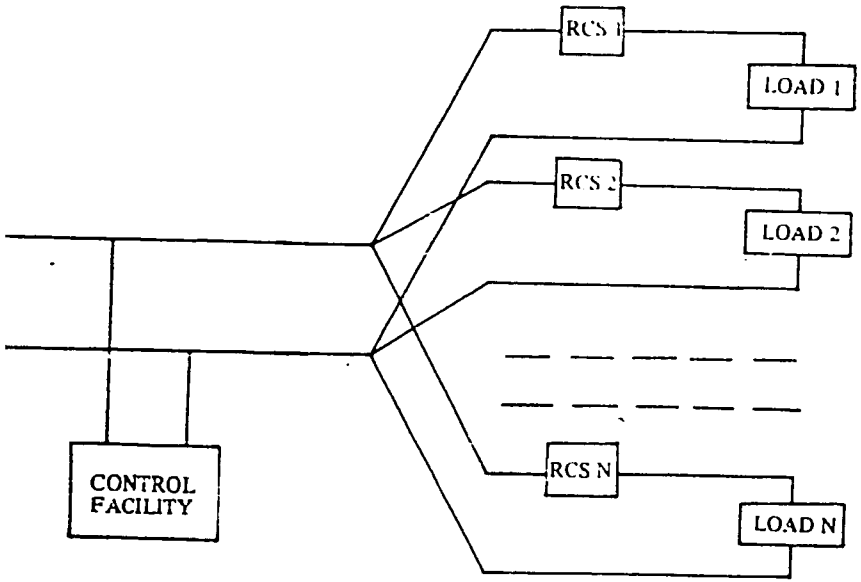

RCS = Remote Control Switch

Fig. 2. Model of system for the Yaounde Scheme

The scheme is designed for use in any electrical environment which can be modelled as shown in Fig. 2. Examples include, a low tension network served by a single substation, a set of substations served by a single medium tension transmission line, and, the entire network of a micro- or mini-hydro facility. Remote control switches (RCS's) 1 through N are turned on and off to supply or cut-off power to various loads. In the system currently under investigation, each RCS is given an eight-bit identification code and each transmission consists of 15 bits. For a 50-Hz line, a single controller can thus access all 256 RCS's in the system in 38.4 seconds.

ENCODING PRINCIPLE

To encode the binary information, the zero crossings of the power signal are detected and the signal is left unaffected for a 0, or surpressed during τ seconds for a 1. Signal suppression is achieved by adding to the signal, a 180-degree phase-shifted version of itself. A functional block diagram for the encoder is shown in Fig. 3, and further elaborated in Fig. 4. The power signal is attenuated and then fed through an analog

switch to an inverting amplifier. The zero crossing anticipators (ZCA's) — realised using comparators — are set so that the analog switch is turned on shortly before, and turned off shortly after each zero crossing, see Fig. 5. The gain of the amplifier is the reciprocal of that of the attenuator. Thus, the signal at the output of the amplifier, when the switch

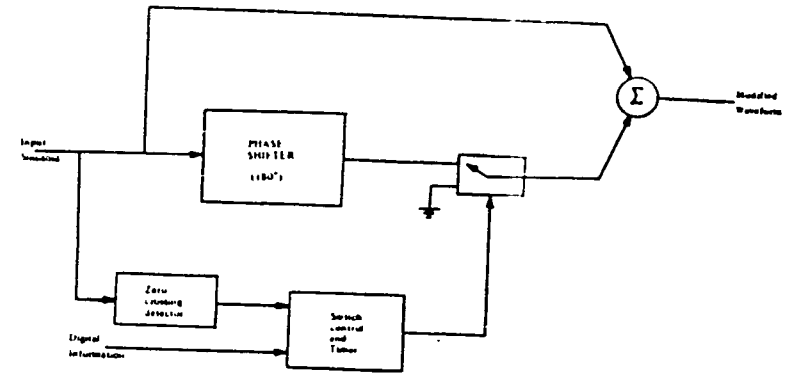

Fig. 3 Functional block diagram of the encoder

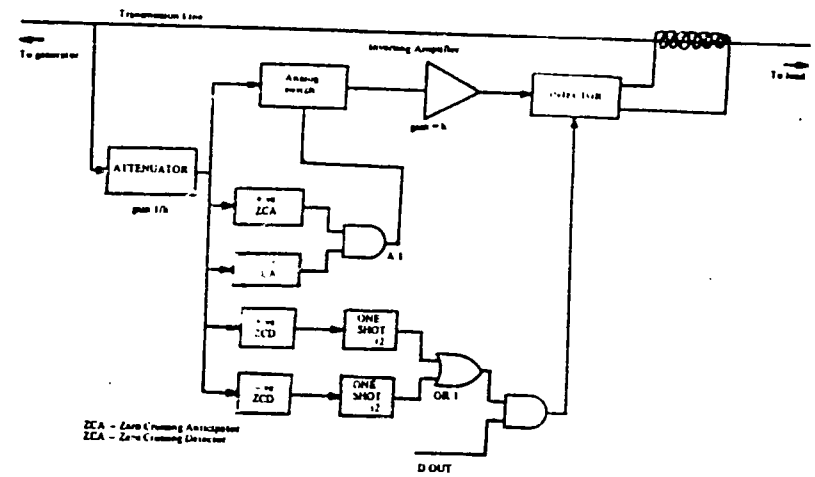

Fig 4 Detailed functional block diagram of the encoder

is on, is equal in magnitude but opposite in polarity to that at the input of the attenuator. Zero crossing detectors (ZCD's) are used to trigger monostable multivibrators such that the pulses at the output of gate OR 1 occur within the on times of the analog switch, as shown in Fig. 5. The amplifier output has therefore stabilized before any signal injection occurs. The pulses at OR 1 are ANDed with the bit to be transmitted, D OUT, to provide the control signal to the injection circuit. Typical injection circuits being investigated appear in [2, 7].

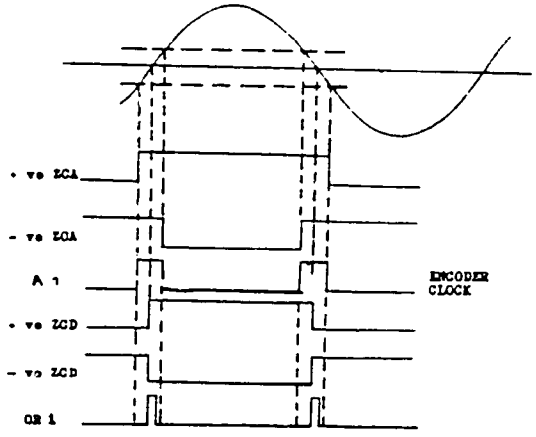

Fig. 5. Timing diagram for the encoder.

It is assumed that the control program for the scheme is stored – in computer memory, for example. The 15 bits which constitute each block of information, are transferred from storage into a buffer. In the current simulation, the buffer is accessed every 150 milliseconds, and the data serialized by the circuit shown functionally in Fig. 6. The clock for this circuit is taken at the output of gate A1 of Fig. 4.

The encoder circuits have been defined with only minimal consideration for reducing the hardware cost. The emphasis has been on accurately encoding the binary input sequence using the waveform modification scheme described. By contrast, cost reduction plays an important part in the design of the decoder. This is justified by the consideration that there can be as many as 256 decoders for each encoder in the system.

FREQUENCY SPECTRUM

We now consider the frequency spectrum of the modified signal. Let $F_0(s)$ and $F_1(s)$ be the single-sided Laplace transforms of the waveforms associated with the transmission

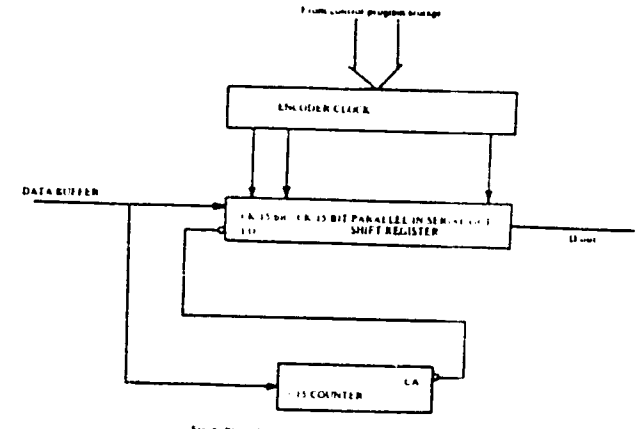

Fig. 6. Block diagram for accessing and serializing the [illegible]

of a single 0 bit, and a single 1 bit, respectively. i.e. $F_0(s)$ is the transform of the positive half of a pure sine wave. Then the waveform associated with the transmission of the binary sequence $b_1 b_1 b_1 \ldots$ transforms, by the time delay property, to :

$$
\begin{aligned}
F(s) = \pm\, [& (b_0 \oplus 0)F_1(s) + (b_0 \oplus 1)F_0(s) \\
& -(b_1 \oplus 0)F_1(s)\, exp(-s\pi/w_0) \\
& -(b_1 \oplus 1)F_0(s)\, exp(-s\pi/w_0) \\
& +(b_2 \oplus 0)F_1(s)\, exp(-2s\pi/w_0) \\
& +(b_2 \oplus 1)F_0(s)\, exp(-2s\pi/w_0) + \ldots] \qquad (1)
\end{aligned}
$$

where, w_0 is the frequency of the unmodified sinusoid, and, $\oplus$ represents the logical Exclusive-OR operation. The plus sign is selected if b_0 is transmitted at a zero crossing of positive slope. Otherwise, the minus sign is chosen.

It can be easily shown that for the carrier of (1), and, assuming an amplitude of 1 volt and transmission at a zero crossing of positive slope,

$$F_0(s) = \left(\frac{w_0}{s^2 + w_0^2}\right) (exp(-s\pi/w_0) + 1) \qquad (2)$$

Similarly,

$$F_1(s) = \frac{w_0 exp(-s\pi/w_0)}{s^2 + w_0^2} + \left(\frac{exp(-s\tau)}{s^2 + w_0^2}\right)(w_0 cos w_0\tau + s.sin w_0\tau) \quad (3)$$

where τ is the duration of the suppression.

Observe that $F_1(s)$ may be written as $F_0(s) + G_1(s)$, and that

$$G_1(s)\Big|_{\tau=\pi/w_0} = -F_0(s)$$

This checks out since $g_1(t)$, the added signal associated with a single transmitted 1, is given by,

$$g_1(t) = -f_0(t), \text{ for } \tau=\pi/w_0$$

where,

$f_0(t)$ is the inverse Laplace transform of $F_0(s)$.

For a binary sequence with 1's in bit positions $k_1, k_2, \ldots$, we have,

$$F(s) = F_0(s)\,[1 - exp(-s\pi/w_0) + exp(-2s\pi/w_0) + \ldots]$$
$$+ G_1(s)\,[exp(-sk_1\pi/w_0) + exp(-sk_2\pi/w_0) + \ldots]$$
$$= \frac{w_0}{s^2 + w_0^2} + G_1(s)\,[exp(-sk_1\pi/w_0) + exp(-sk_2\pi/w_0) + \ldots] \quad (4)$$

Now consider the waveform when an infinite sequence of 1's is transmitted. Intuitively, this is the signal with which one associates the largest spectral distortion from the spectrum of an unmodified sinusoid. In this case, we have,

$$F(s) = \frac{w_0}{s^2 + w_0^2} + G_1(s)\,(1/(1-exp(-s\pi/w_0))) \quad (5)$$

Substituting for $G_1(s)$ and taking s on the imaginary axis, we find,

$$F(jw) = \frac{w_0}{w_0^2 + w_0^2} + \left(\frac{1}{w_0^2 - w^2}\right)$$

$$x \left[\frac{cos(2\pi w/w_0) - 1 + j\,(sin(2\pi w/w_0) - 2sin(\pi w/w_0))}{2(1 - cos(2\pi w/w_0))}\right]$$

$$x\ [w_0 - w_0 cos(w_0\tau)cos(w\tau) - w sin(w_0\tau)sin(w\tau)$$
$$- j\,w sin(w_0\tau)cos(w\tau) - w_0 cos(w_0\tau)sin(w\tau)] \quad (6)$$

Fig. 7 shows plots of $|F(jw)|$ and $\angle F(jw)$, with τ as a parameter. As expected, spectral distortion increases with τ. We shall return to this in the next section.

Fig. 7(a): Magnitude of F(jw) vs Frequency with τ as a Parameter

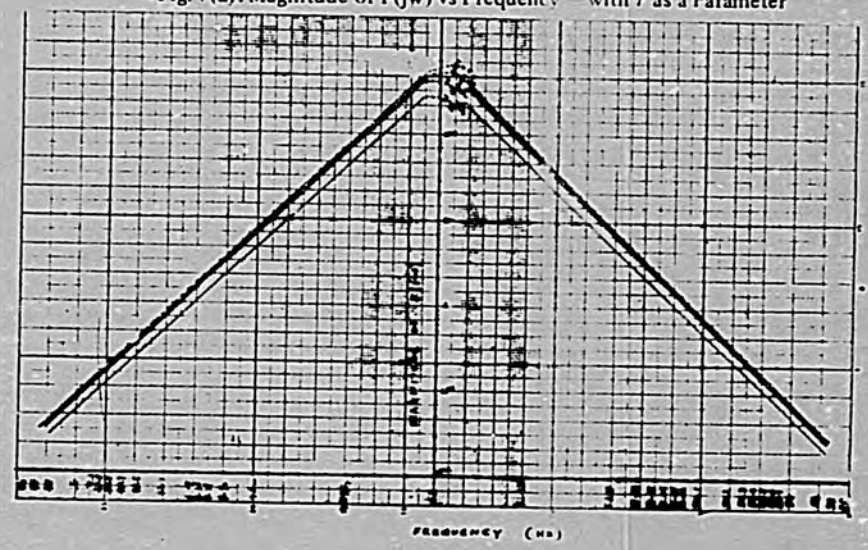

DETECTION PRINCIPLE

The two options available to us, in detecting the transmitted information, are given in Table 1. Option A corresponds to a modulated carrier data transmission scheme, while

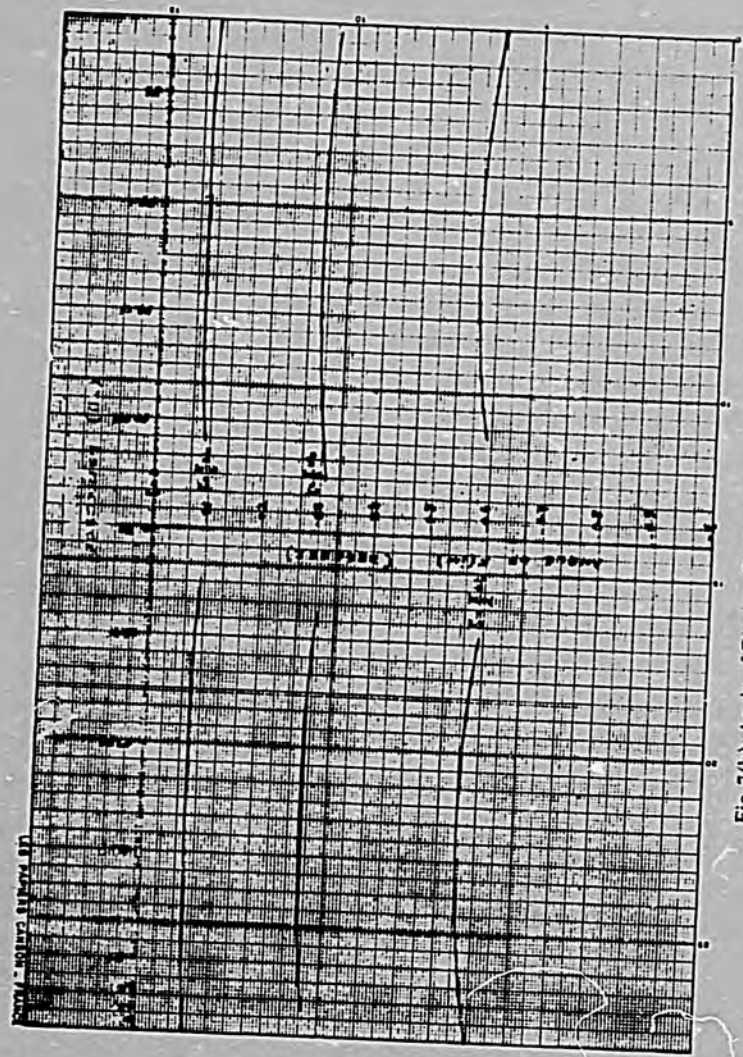

Fig. 7(b): Angle of F(jw) vs Frequency — with τ as a Parameter

option B represents a base-band scheme. A functional block diagram for the detector in each case is given in Fig. 8. The demodulation scheme suffers from the disadvantage that the modulating signal, once detected, still needs to be converted into a sequence of bits.

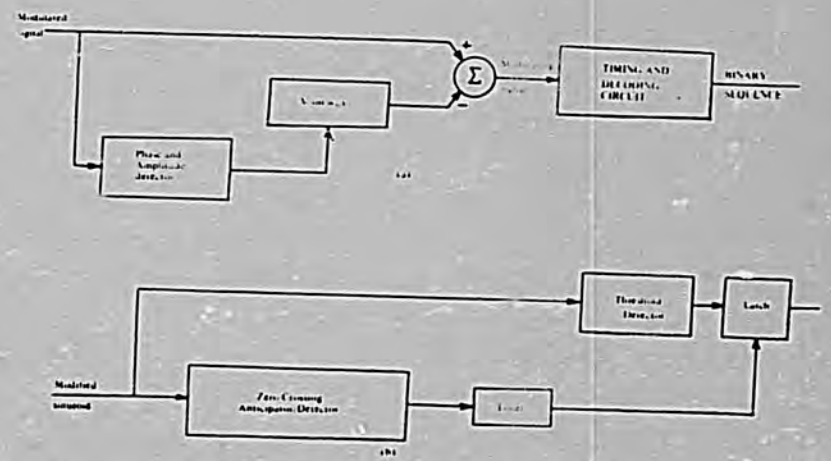

Fig. 8 Functional block diagram for the decoder using demodulation: (b) decoder in a base-band transmission system

Option	Information	Signal to be detected
A	0	$f_0(t)$
	1	$f_0(t) + g_1(t)$
B	0	0
	1	$g_1(t)$

Table 1: Available options in detecting the transmitted information.

The circuitry needed to do this is very similar in hardware complexity to the entire circuit for the base-band decoder. We are therefore persuaded to focus our attention on

a detector which does not operate on the demodulation principle.

Two different methods of one-step detection of the binary sequence are currently under investigation. In the first method, the modified sinusoid – or some fraction there of – is rectified, and, sampled at some time instant t_0 during the suppression time. (In what follows, time is measured from the nearest zero crossing of the corresponding unmodified sinusoid). This sample is then digitized by latching it into a flip-flop as either a 0 or a 1, see Fig. 9.

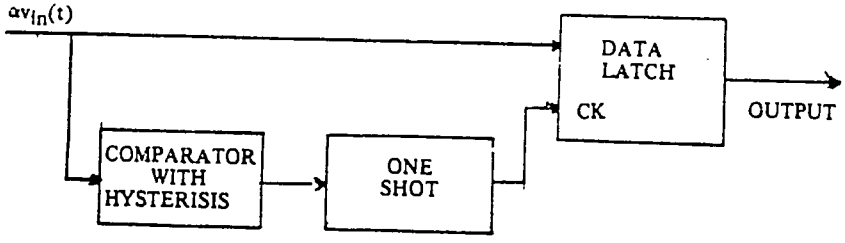

Fig. 9. Scheme for one step detection of encoded bits

The comparator-with-hysteresis serves as a detector (in actual operation, an anticipator) of the zero crossings. The monostable multivibrator provides a delay so that sampling occurs precisely at t_0. The multiplier α, as shown below, is a nonlinear function of v_{in}. This is because during suppression time the sampled voltage for a transmitted 0 must satisfy the input threshold conditions for the type of logic technology employed, while the same signal must not exceed the maximum allowable input voltage at any time. The hardware is chosen such that α is a constant during suppression time.

Suppose the flip-flop has the following characteristics : v_0 and v_1 are the maximum input voltage corresponding to a logic 0, and the minimum input voltage corresponding to a logic 1, respectively. t_s is the set-up time for data input, and t_h is the hold time for data input (after the clock transition). Then correct detection of the encoded bit requires that,

$$\alpha v_{in}(t) \geq v_1, \quad t_0 - t_s \leq t \leq t_0 + t_h \tag{7}$$

t_0 is related to τ by the inequality,

$$t_0 + t_h \leq \tau \tag{8}$$

If the comparator-with-hysteresis is simply a Schmitt trigger buffer of the same logic family, we also have,

$$\alpha v_{in}(t) \leq v_0, \quad 0 \leq t \leq t_1 \tag{9}$$

where t_1 is the time delay between the 1-to-0 transition of the output of the buffer and the next zero crossing.

In (9) we have used the symmetry of the rectified signal about the zero crossing, when the encoded bit is a 0.

Criteria for choosing α, τ, t_0, and t_1.

In (7) and (8), the only parameters left to our choice are α, τ, t_0, and t_1. There are two important criteria involved in the choice of τ. We wish to :

(i) minimize spectral distortion, and

(ii) maximize the distinguishability of the signal corresponding to an encoded 1. from that corresponding to an encoded 0.

The choice of τ is thus of paramount importance to the success of the scheme. This choice is, however, greatly influenced by α. Given α, we must choose τ such that

$$\alpha v_{in}(t) \Big|_{t = \pi/2w_0} \leq v_m \tag{10}$$

where v_m is the maximum allowable input voltage for the logic technology used.

Taking the equality in (8), and substituting for $t_0 + t_h$ in (7), as well as for v_{in} in (7) and (10), we obtain,

$$\alpha \in \left[\frac{v_1}{A \sin(w_0 \tau)} \cdot \frac{v_m}{A} \right] \tag{11}$$

Taking $v_1 = 2.5$ volts, $v_m = 5.0$ volts, typical values for TTL gates, and $A = 220$ volts, the bounds in (11) define an interval only if $\tau > \pi/6w_0$. This, clearly, violates criterion (i) above for the choice of τ.

This predicament is avoided by making α a nonlinear function of v_{in}. In particular, $\alpha(v_{in})$ as shown in Fig. 10, where in the nonlinear region α varies inversely with v_{in}, permits the choice of much smaller values for τ, and therefore the minimization of spectral distortion. α functions of this type can be readily realized using commonly used circuit elements. In the present investigation $k_0 \doteq 1$.

With (10) satisfied, and $\alpha \doteq 1$ during suppression time, the smallest allowable value

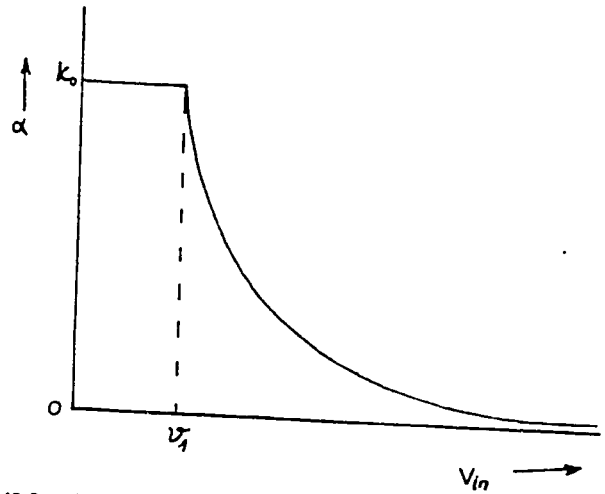

Fig. 10. Plot of typical α curve which minimizes spectral distortion ($k_o = 1$, and in non-linear region, α varies inversely with V_{in}).

for τ is found by taking the equality in both (7) and (8). This gives,

$$\tau_{min} = (1/w_0)\sin^{-1}(v_1/A) + t_s + t_h \qquad (12)$$

Choosing the equal sign in (8) clearly fixes the value of t_0. And since α is now determined, t_1 is readily found from (9) to be $(1/w_0)\sin^{-1}(v_G/A)$.

It should be noted that the criteria indicated above do not invariably lead to the expressions obtained for the various parameters. τ, for example, can be greatly reduced by making the parameter α a jump function of v_{in}.

As in Fig. 11, α could be very large during suppression time, and very small, or even zero, at other times. Similarly, the comparator with hysteresis could be made to approximate a zero crossing detector quite accurately, by using the circuit shown schematically in Fig. 12, in which t_1 can be made arbitrarily close to zero. These refinements, however, only add to the complexity of the detector. Since every branch transmission line, and ultimately every subscriber, implies one such detector, it is of great economic importance to keep the detector as simple as possible. Reliability considerations also dictate that the detection process be uncomplicated.

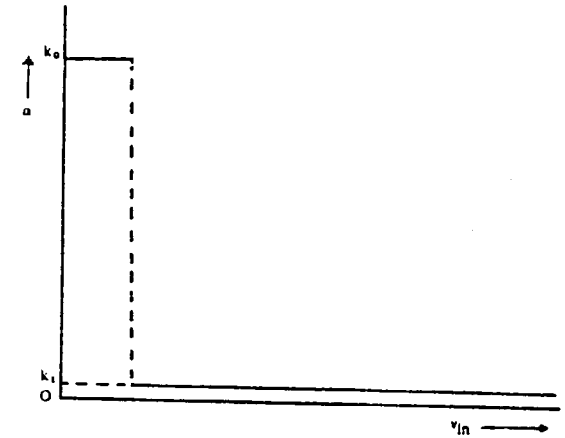

Fig. 11. Jump function α curve for further minimization of spectral distortion – $k_o >> 1$ and $k_1 << 1$.

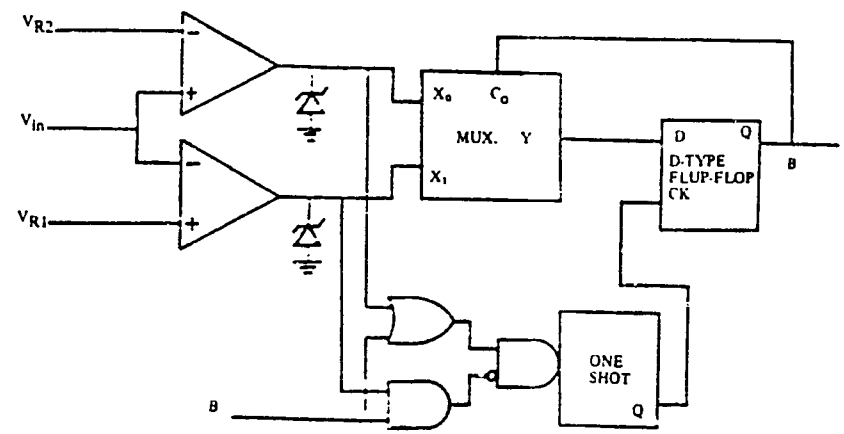

Fig. 12. Schematic of comparator with hysteresis used for Zero crossing determination. The 1→0 transition of B can be made to occur arbitrarily close to the zero crossing.

AN ALTERNATE APPROACH

A second method of one-step detection, which is also under investigation, is a differentiation scheme. The modulated signal is attenuated and differentiated, and, the encoded bits detected as shown schematically in Fig. 13. The waveforms in this method are as shown in Fig. 14. Each pair of adjacent jumps in the differentiated signal indicates the transmission of a 1. The encoded bits are then detected according to the conditions in Table 2.

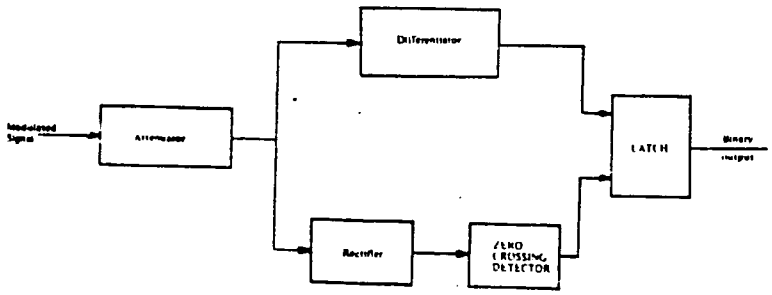

Fig. 13 Differentiation Scheme for one step detection of encoded bits

Condition	Bit detected
Zero crossing detector triggered and no edge in v(t)	0
Zero crossing detector triggered and edge in v(t)	1

Table 2: Detection conditions for differentiator-based detector.

Clearly, a 1 can be detected without examining the output of the zero crossing detector. However, given the inherent tendency of differentiators to emphasize the noise in a signal, inclusion of the output of the zero crossing detector in detecting a 1, provides an added measure of noise immunity.

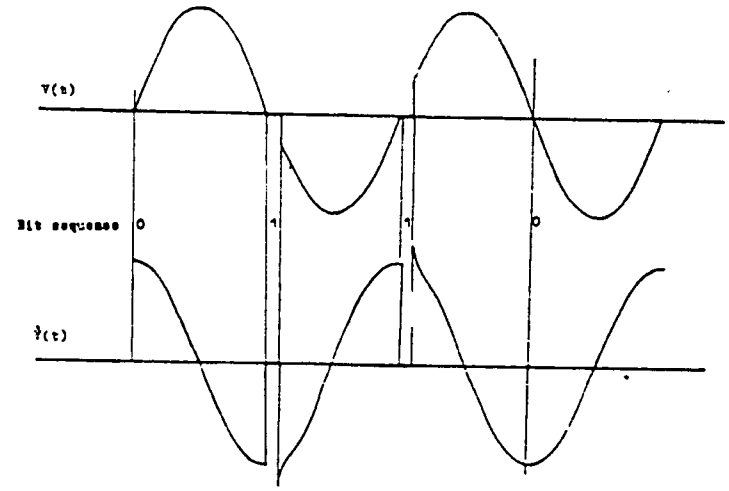

Fig. 14: Modulated signal for the sequence 0110-V(t) and its derivative V(t)

CONCLUSION

The Yaounde scheme offers the promise of an alternative method of digital information transmission on electrical power lines by waveform modification of the power signal. The advantages and disadvantages of the scheme compared to other techniques in general, and the ADL scheme in particular, will be more clearly known after experimental data have been collected. Examination of the principles shows that the Yaounde scheme overcomes the need for tight control of the line frequency.

The two detection methods analyzed both seem adequate for recovering the transmitted binary sequence. However, noise immunity considerations apart, the differentiation method has the advantage that the effect of τ on the detectability of the encoded bits is greatly minimized – the edges in the differentiated signal will occur, in principle, for even extremely small values of τ. In theory then, spectral distortion can be minimized