PN-ABB-878

PAPERS PRESENTED DURING THE FIRST NATIONAL PEANUT CONSULTATION & PEANUT-CRSP REVIEW

February 7-8 1985
PCARRD, Los Baños, Laguna,
Philippines

First National Peanut Consultation & Peanut-CRSP Review

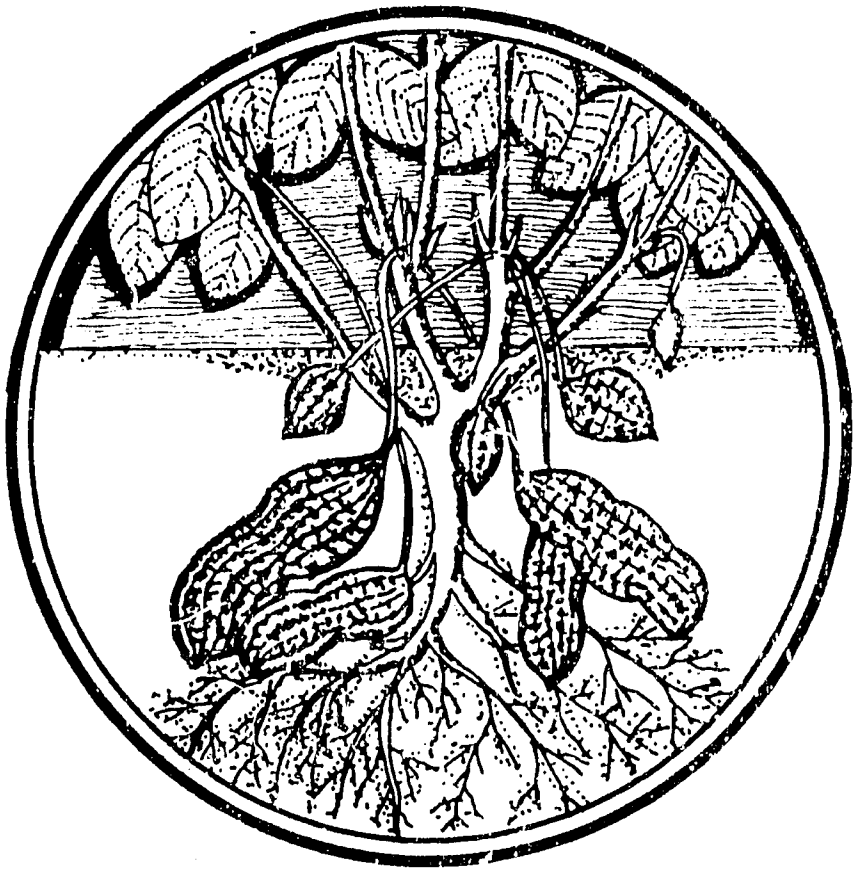

February 7-8, 1985
PCARRD, Los Baños, Laguna

RATIONALE

Peanut is one of the important grain legumes grown in the Philippines. With the technical and financial assistance provided by the Peanut-Collaborative Research and Support Project, headed by Dr. David Cummins, its Director, research activities on various disciplines in this crop have been accelerated. The assessment of the progress attained so far in peanut research and development is deemed necessary. Hence, this national peanut consultation is our first attempt to review the status of peanut research and development work in the country, to plan peanut research and development strategies that can be impleneted and to gather benchmark information on various disciplines to serve as guide in identifying research priorities and or formulating research prospects on peanut in the Philippines.

OBJECTIVES

1. To assess the status of peanut research and development in the Philippines

2. To update the state of the art in peanut

3. To highlight and disseminate mature technologies and latest findings in peanut research and development

4. To review the collaborative projects implemented through the Peanut–CRSP

EXPECTED OUTPUT

1. Assessment of the status of Peanut research and development in the country

2. List of mature technologies and significant findings

3. List of researchable areas

4. Revised research and development program on peanut

PROGRAMME

February 7, 1985
(Thursday)

Morning Session

8:00	Registration	
9:00	Opening Session	
	National Anthem	
	Welcome Remarks	**Dr. Ramon V. Valmayor** Executive Director PCARRD
	Rationale and Guidelines of the Consultative meeting and Review	**Dr. Dely P. Gapasin** Director Crops Research Department PCARRD
	An Overview of Peanut CRSP Program in Asia	**Dr. David Cummins** Program Director Peanut - CRSP
	Peanut Research and Development in the Philippines	**Dr. Florendo C. Quebral** Team Leader, National Legumes Commodity Research Team and Professor, UPLB
	Moderator :	**Dr. Erlinda Paterno** Associate Professor UPLB
10:00	**COFFEE BREAK**	
	I. PRODUCTION AND POSTHARVEST HANDLING	
10:15	Production Management of Peanut	**Dr. Joven Lales** Assistant Professor UPLB

3

10:40	Post Harvest Handling of Peanut	**Dr. Isagani Sarmiento** Director AMTEC, UPLB
11:05	Peanut Production A farmer's experience	**Mr. Manuel Cabie** Farmer Gonzaga, Cagayan
11:30	Seed Production and Technology in Peanut	**Ms. Erlinda Sevilla** Head Seed Testing Laboratory BPI CES
11:55	Open Forum	
	Moderator	**Dr. Rustico Santos** Vice President Isabela State University
12:00	**LUNCH BREAK**	

Afternoon Session

II P CRSP PROJECT REVIEW

1:00	Peanut Varietal Improvement Program of the Philippines	**Mr. Ed Redoña** Sr Research Assistant IPB UPLB
	Utilization of Microbial Association in Peanut Production	
1:45	a) Rhizobium	**Dr. Erlinda Paterno** Associate Professor UPLB
2:30	b) Mycorrhizae	**Dr. Lina Ilag** Associate Professor UPLB
3:15	**COFFEE BREAK**	
3:30	Pest Management Studies for Peanut in the Philippines	**Dr. Eliseo Cadapan** Assistant Professor UPLB

4

4:45	Utilization of Peanut in the Philippines	**Dr. Elias Escueta** Assistant Professor UPLB
	Moderator	**Dr. Marianito Villanueva** Director of Research and Extension Visayas State College of Agriculture

February 8 (Friday)

Morning Session

III UTILIZATION AND SOCIO ECONOMICS

8:00	California Manufacturing Corporation Experience in Peanut Utilization	**Dr. Renato Gonzales** Director R & D/Quality Assurance, CMC
8:25	Status of Peanut Marketing in the Philippines	**Dir. Ramon de Jesus** Director Directorate for Grains Marketing National Food Authority
8:50	Socio economic Aspects of Peanut Production in the Philippines	**Dr. Paciencia Manuel** Assistant Professor UPLB
9:15	Open Forum	
	Moderator :	**Dr. Aida Librero** Director, SERD PCARRD
9:30	**COFFEE BREAK**	
9:45	Workshop Sessions	

Group	Topic	Leader	Rapporteur
I	Varietal Improvement	Dr. Ricardo Lantican	Mr. Joselito Payot

5

II	Cultural Management and Cropping System	Dr. Joven Lales	Ms. Noemi Orolaza
III	Pest Management	Dr. Eliseo Cadapan	Ms. Marita Acompanado
IV	Post Harvest Handling, Utilization and Marketing	Dr. Elias Escueta	Ms. Ma. Flordeliz Tiamzon

12:00 **LUNCH BREAK**

Afternoon Session

1:00 Continuation of the Workshop Sessions

3:00 Plenary Session (Group Reports)

Group I
Group II
Group III
Group IV

Open forum

Moderator : **Dr. Pablito Painplona**
Deputy Director
Southern Mindanao
Agricultural Research
Center

4:30 Closing Session

Presentation of Workshop Output and Highlights of the Review and Consultation — **Dr. Florendo C. Quebral**
Team Leader
National Legumes
Commodity Research
Team and
Professor, UPLB

Inspirational Talk — **Dr. David Cummins**
Program Coordinator
Peanut, CRSP

6'

Closing Remarks

Dr. Dely P. Gapasin
Director
Crops Research Department
PCARRD

Moderator

Dr. Thelma S. Cruz
Director
ACD, PCARRD

GUESTS

External Evaluation Panel

Dr. Ken Garren
Dr. Max Milner

International Rice Research Institute

Dr. Richard Morris
Dr. R. K. Pandey

Ministry of Agriculture and Food—Agricultural Research Office

Dr. Edgardo Quisumbing

North Carolina State University

Dr. Marvin K. Beute
Dr. William Campbell
Dr. Gerald Elkan
Dr. Johnny Wynne

Philippine Council for Agriculture and Resources Research and Development

Dr. Ramon V. Valmayor

University of Georgia

Dr. David Cummins

PARTICIPANTS

Ayala Agricultural Development Corporation

Mr. Victor Paner, Jr.

Bureau of Plant Industry – MAF

Bicol Experiment Station
Ms. Celestina Imperial

Bohol Experiment Station
Ms. Severina Reyes

Central Experiment Station
Ms. Paz Austria
Ms. Virginia Pacaba

Davao Experiment Station
Ms. Cecilia Garcia

Economic Garden
Ms. Elena Catipon
Mr. Benjamin Legaspi
Ms. Aida Martisano
Ms. Rosita Matias

Hagan Experiment Station
Ms. Visitacion Perdido

La Granja Experiment Station
Mr. Nestor Almodiente

Tupi Experiment Station
Ms. Delia Concepcion

Cagayan State University

Mr. Jimmy Domingo

California Manufacturing Company

Ms. Adoracion Barrion
Dr. Renato Gonzales

Central Luzon State University

Dr. Filomena F. Campos

Central Mindanao University

Dr. Nonito Franje
Dr. Herminio Pava

Don Mariano Marcos Memorial State University

Mr. Expedito Villanueva

Food and Nutrition Research Institute

Ms. Loreto Dumada-ug

Isabela State University

Cabagan - Dr. Roger Tukktuk
Echague - Dr. Rustico Santos

Ministry of Agriculture & Food – Agricultural Research Office

Ms. Janet Dabu

National Food Authority

Ms. Januaria Cervantes
Mr. Andres Queddeng

National Food and Agriculture Council

Ms. Marieta Tiongson

National Post Harvest Institute for Research Extension

Ms. Gloria Picar

National Science and Technology Authority

Omar Taguiang

Philippine Council for Agriculture and Resources Research and Development

Dr. Thelma S. Cruz
Dr. Patricio Faylon
Dr. Aida Librero
Dr. Beatriz del Rosario

Philippine Tobacco Research and Training Center

Dr. Santiago Obien

Tarlac Agricultural College

Ms. Lilibeth Bajit
Prof. Camilo Laranang
Ms. Ester Mercado
Ms. Tessie Navarro

University of the Philippines at Los Baños

Agronomy Department
Dr. Arnold Garcia
Dr. Joven Lales
Dr. Restituta Robles

Dean's Office
Dr. Florendo C. Quebral

Entomology Department
Dr. Eliseo Cadapan
Mr. David Alberto Lobo
Ms. Celia Medina

Institute of Food Science and Technology
Dr. Elias Escueta
Ms. Raquel de la Cueva

Institute of Plant Breeding
Dr. Remedios Abilay
Dr. Candida Adalla
Mr. Rudy Navarro
Mr. Ed Redonia
Mr. Dante Tabien

Plant Pathology Department
Dr. Lina Ilag
Dr. Oscar Opina
Dr. Amado Piamonte

University of Southern Mindanao

Dr. Pablito Pamplona

Visayas State College of Agriculture

Dr. Marianito Villanueva

WORKING COMMITTEES

Planning and Coordination

Dr. Dely P. Gapasin
Dr. Florendo C. Quebral
Mr. Danilo Cardenas
Ms. Angelina Garces
Ms. Susan Sandra L. Ilao

Reception

Ms. Marita Acompañado
Ms. Emy Huelgas
Ms. Fe L. Pamplona

Food and Accommodation

Ms. Susan Escobin

Transportation

Mr. Rodolfo Ocampo
Ms. Laarni Balagtas

Physical Arrangement

Ms. Carmen Javier
Mr. Ramir Quintos

Program

Mr. Eduardo Oro
Mr. Elmer Grande
Ms. Evelyn Palapala

Publicity and Documentation

Dr. Lolita Ragus
Ms. Ma. Reina Quisumbing

Finance

Mr. Angelito Carpio
Mr. Ireneo Palma
Ms. Vilma Latay

Clerical Support

Mr. Angelito Carpio
Ms. Nelia Laroza
Mr. Salvador Romero

TABLE OF CONTENTS

1. An overview of Peanut-CRSP Program in Asia ..... Dr. David Cummins
2. Peanut research and development in the Philippines ..... Dr. Florendo Quebral
3. Producation management of peanut ..... Dr. Joven Lales
4. Post harvest handling of peanut ..... Dr. Isagani Sarmiento
5. Peanut production: A farmer's experience ..... Mr. Manuel Cabie
6. Seed production and technology in peanut ..... Ms. Erlinda Sevilla
7. Peanut varietal improvement program of the Philippines ..... Mr. Ed Redoña
8. Utilization of microbial association in peanut production
   a) Rhizobium ..... Dr. Erlinda Paterno
   b) Mycorrhizae ..... Dr. Lina Ilag
9. Pest management studies for peanut in the Philippines ..... Dr. Eliseo Cadapan
10. Utilization of peanut in the Philippines ..... Dr. Elias Escueta
11. Socio-economic aspects of peanut production in the Philippines ..... Dr. Paciencia Manuel
12. Workshop Output

12

TECHNICAL PAPERS

GLOBAL NATURE OF PEANUT CRSP

SEMIARID TROPICAL AFRICA

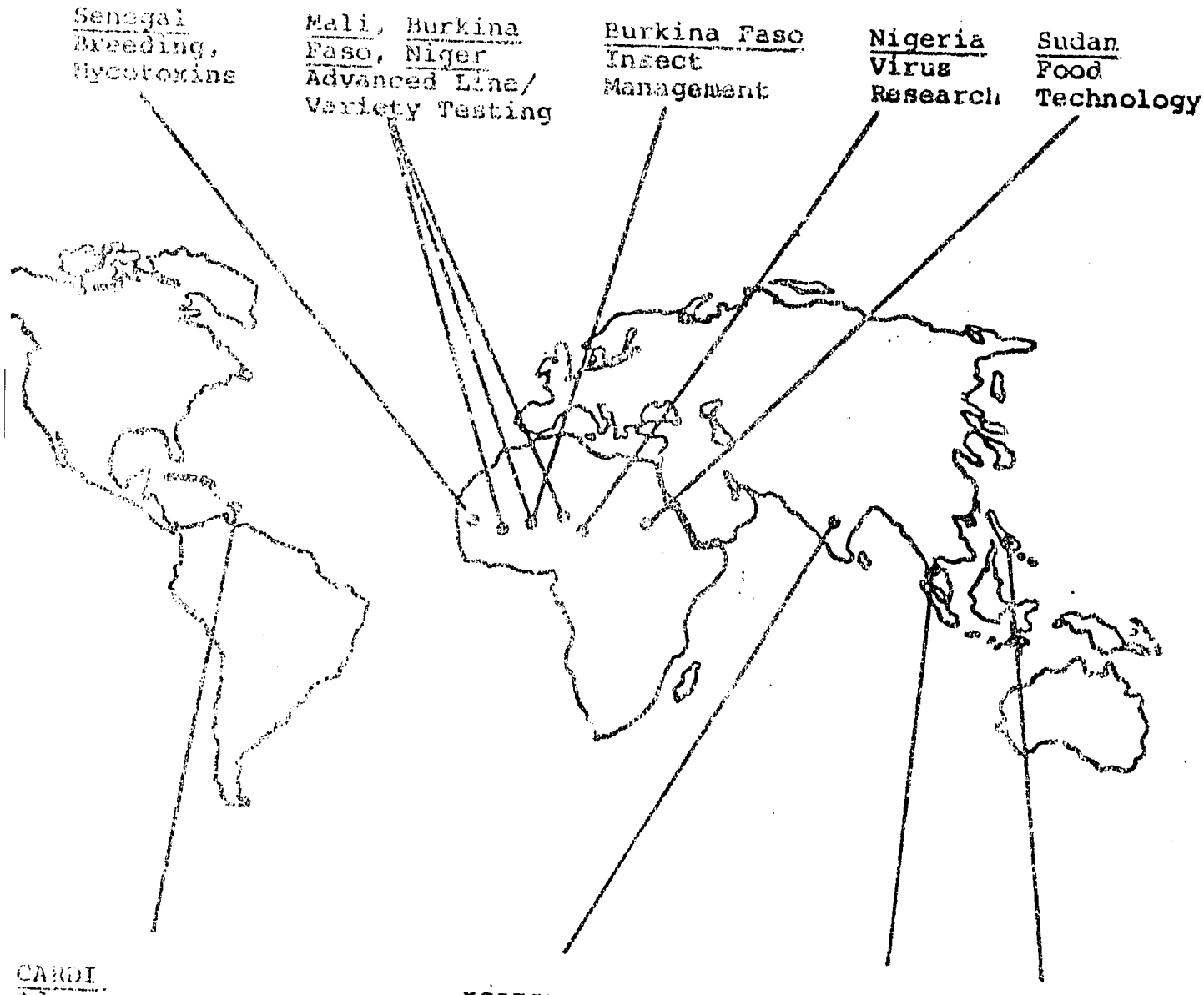

CARDI
Advanced Line/
Variety Testing,
Food Technology

CARIBBEAN REGION

ICRISAT
Program
Coordination

INTERNATIONAL

HAILAND, PHILIPPINES
reeding, Insect
nagement, Food
chnology, Soil
crobiology

OUTHEAST ASIA

INTRODUCTION

The peanut, Arachis hypogaea L., is an annual legume native to South America, likely originating on the eastern foothills of the Andes in the area that is now southern Bolivia and northern Argentina. It is grown in most tropical, subtropical, and temperate countries between 40 degrees north and 40 degrees south. Estimated annual production of peanut is about 18 million metric tons on 18 million hectares. More than half of the production is in developing countries, and yields are often much lower than the world average.

Peanut is an important oil, food, and feed source worldwide. An estimated 80% of the world production is extracted for cooking oil. Uses vary worldwide. For example, India the largest producer of peanut, uses essentially all the production for oil, while in some countries of Semiarid Tropical Africa over half of the production is consumed directly as food by the subsistence farmer who produced them. Peanut is well suited to production by small farmers in developing countries, but production is low and eratic.

Research needs are great. In a USAID survey, peanut research in developing countries was rated highest priority, excluding small ruminants, sorghum and millet, and bean/cowpea, to improve the well being of the small farmer in developing countries. In implementing the Peanut Collaborative Research Support Program (CRSP), the Board for International Food and Agricultural Development (BIFAD) Joint Research Committee recognized the essential role of research to relieve constraints and realize the great potential of peanut to provide food and cash income in developing countries.

The program is funded through "Title XII-Famine Prevention and Freedom from Hunger" under the "International Development and Food Assistance Act of 1975" by USAID, and the participating U.S. and host country institutions. The Peanut CRSP implementation order was issued 1 July 1982.

Features of Peanut CRSP

1. Targeted effort - Constraints were identified and targeted research objectives were established for each host country and U.S. institution. Collaborators were identified or described in the planning process.

2. Efficient design- Four U.S. universities allow for a manageable CRSP, with minimum management expenditure and maximum program expenditure. The universities are Alabama A&M, Georgia, North Carolina State, and Texas A&M. Florida has some participation as a subgrantee to Alabama A&M.

3. Global impact - Collaboration with 9 host countries provides impact into 3 major regions; SAT Africa, Southeast Asia, and the Caribbean. Specific countries are: Senegal, Mali, Burkina Faso, Niger, Nigeria, Sudan, Thailand, Philippines, and the English speaking Caribbean Countries through the Caribbean Agricultural Research and Development Institute (CARDI) and the University of the West Indies.

Goal

The goal of the Peanut CRSP is to:

1. Develop a peanut research base and technology development capacity in both the U.S. and host countries.

2. Focus the resources of both developing country and U. S. research institutions into a long term collaborative research program to relieve constraints to peanut production and utilization.

Objectives

General

The Peanut CRSP has two general objectives common to all projects.

1. Enhance research programs in the U.S. and host country institutions through
   -development of cultivars, management practices, and utilization processes that would improve yields, lower costs and enhance peanut use
   -support of programs in terms of equipment, supplies, travel, and personnel.

2. Improve the research capability of host country institutions by
   -offering short term and degree oriented training programs for host country staff at U.S. institutions
   -providing on-site consultation in the host countries by U.S. scientists

Specific

The specific research objectives of the projects that comprise the Peanut CRSP were developed around prioritized constraints identified during the planning process. These constraints, program strategy, and research projects designed to gain information to relieve them follow.

1. Constraint identification. - During the planning of the Peanut CRSP, 13 potential constraints to peanut production and utilization were identified through site visits and questionaires widely distributed throughout the world. The Planning Grant Panel and Team evaluated the responses and summarized the most important researchable constraints. Six constraint areas were included in the CRSP plan, which were reviewed and approved by BIFAD for the CRSP. The constraints are:
   a. low yields because of unadapted varieties and lack of varietal resistance to diseases, insects, and drought;
   b. health hazards and economic losses due to mycotoxin contamination;
   c. yield losses due to infestations of weeds, insects, diseases, and nematodes;
   d. food supplies inadequate and peanut is not generally considered a primary food source;
   e. economic and sociological problems preventing efficient production and utilization;
   f. physiological and soil microbiological barriers to higher yields.

2. Program Strategy - The individual Peanut CRSP projects are designed with host country needs in the forefront, but at the same time focusing on regional problems. Information is shared on a regional basis by means of reports, publications, and appropriate meetings. An international scope is assured through information exchange and close coordination with International Agricultural Research Centers, World Bank, United Nations Organizations, and other AID programs from developed countries. Formal linkage was developed with the International Crops Research Institute for the Semi-Arid Tropics (ICRISAT) to avoid program duplication or unnecessary overlap and insure maximum complementarity.

3. Relationship of research projects targeted to peanut production and utilization constraints in developing countries.

Research Projects	Constraints: Low yielding cultivars	Health hazards from mycotoxins	Yield losses from pests	Inadequate food supplies	Economic problems	Soil Microbiological barriers
Econ survey					1	
GA/INPEP	1*					
TX/BCP/S	1	2**	1			
TX/MM/S		1				
GA/PV/N			1			
AAM/FT/S		2		1	2	
NCS/BCP/TP	1		1			2
NCS/IM/TP			1			
GA/IM/BF						
GA/FT/TP		2		1	2	
AAM(FL)FT/CAR		2		1	2	
NCS/TX/SM/TP						1

*1-primary project objective. **2-secondary project objective.

Project codes identification:

Economic survey-Short term studies to be contracted by Management Entity.

GA/INPEP- International Peanut Evaluation Program to introduce and test advanced lines and varieties in Niger, Mali, Burkina Faso and Caribbean by UGA.

TX/BCP/S- Breeding peanut for resistance to foliar and soil-borne diseases in Senegal by TAMU.

TX/MM/S- Mycotoxin management in peanut by prevention of contamination in Senegal by TAMU.

GA/PV/N- Peanut viruses: etiology, epidemiology, and nature of resistance in Nigeria by UGA.

AAM/FS/S- An interdisciplinary approach to optimum food utility of peanut in Sudan by AAMU.

NCS/BCP/TP- Peanut varietal improvement for Thailand and Philippines by NCSU.

NCS/IM/TP- Management of arthropods on peanut in Thailand and Philippines by NCSU.

GA/IM/BF- IPM strategies for groundnut insects in Burkina Faso by UGA.

GA/FT/TP- Consumption of peanut as food and appropriate technology for storage/utilization in Thailand and Philippines by UGA.

AAM(FL)/FT/CAR- Peanut utilization in food systems in the Caribbean by AAMU/UFL.

NCS/TX/SM/TP- Rhizobia and mycorrhizal fungi influence on nitrogen fixation and growth of peanut Thailand and Philippines by NCSU/TAMU.

PEANUT CRSP

ORGANIZATIONAL CHART

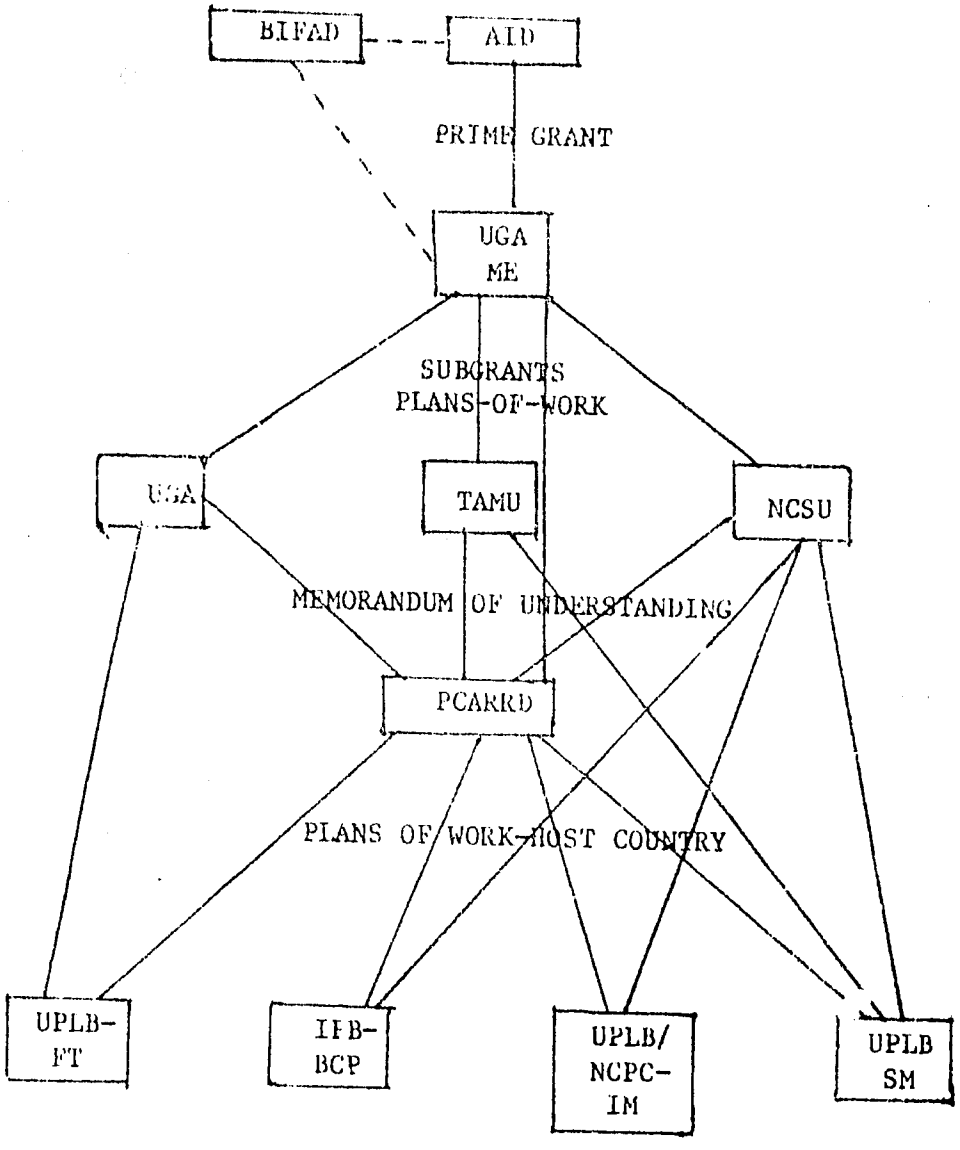

PEANUT RESEARCH AND DEVELOPMENT IN THE PHILIPPINES[1/]

F.C. QUEBRAL[2/]

Peanut growing in the Philippines is produced mainly under upland rainfed conditions mostly as an inter-crop or mixed crop. Although there are areas where the crop is grown on a commercial scale as cash crops.

The production of peanut in the country during the last decade has been erratic both in area and productivity (fig. 1).

Just like any other economic crop plant peanut growing in the country is subject to constraints. These constraints may be classified as physical, technological and socio-economic.

Physical Constraints

The major physical constraints are the uncertain and erratic pattern of monsoon rains and the poor quality of soils where this crop is grown. Most peanut is grown under rainfed condition. Either deficient or excessive rainfall at planting or at the crucial stages of crop growth or harvesting contributes significantly to low and unstable production. The risk of at least partial crop failure through rainfall alone is, therefore, a constant hazard. Moreover, the Philippines, being a tropical country, the weed growth is very prolific and often uncontrolable by human labor.

1/ Paper presented during the First National Peanut Consultation & Peanut-CRSP Review held on February 7-8, 1985 at PCARRD, Los Baños, Laguna.

2/ National Team Leader for Legumes and Professor at UP Los Baños, College of Agriculture.

Technological Constraints

The major technological constraints in peanut production is the sowing of poor quality seeds and low yielding local varieties. Insufficient supply of good quality seed even if improved varieties of peanut have been developed, is the basic deficiency. The organizations dealing with seed production are absorbed mainly on rice and corn crops, devoting little attention to other crops. Moreover, only the government organizations are handling the seed production and so far they have not been able to meet the demand in full. Private participation in this activity is very minimal.

Pests and diseases -- Peanut is attack by a number of pests and diseases and their constant association and prevalence is responsible for reduction in yield. Many peanut growers do not apply pesticides in controlling the pests.

Socio-Economic Constraints

The socio-economic constraints affecting the production of peanut as well as other food legumes are:

1. Inadequate resource allocations to the development of these crops.
2. Small farmers financial ability to maintain production infrastructure or to purchase inputs or to adopt risk prone new technology.
3. Lack of agricultural credit.
4. Lack of transportation and marketing facilities.
5. Price relations for inputs and outputs.
6. The dilemma faced by government of providing incentive prices for the farmers (which could raise profitability) at par with rice and corn.
7. Government marketing organizations' preference for the purchase of rice and corn to food legumes.

The main program of research on peanut are as follows:

Germplasm and varietal improvement

The features of the program are:

- Expansion of germplasm collection which will serve as a resource base for the expanded varietal improvement program especially in relation to
- Breeding for high seed yield and resistance to diseases (leaf spot, rust, rosette, nematodes and aflatoxin).
- Screening for high efficiency in nitrogen fixation.
- Screening for genotype adapted to problem soils and various farming system environments.

National Varietal Performance Trial

The features of this program is to test promising varieties developed by breeding institutions in various locations in the country for at least 4 seasons before recommending to the Seedboard for commercial planting. The Seedboard varieties of peanut are:

Variety	Developed By	Year Released
1. EG Bunch	BPI	1965
2. EG Red[b]	BPI	1965
3. BPI-P 9	BPI	1973
4. CES 101	UPLB	1973
5. UPL-Pn$_2$	UPLB	1976
6. UPL-Pn$_4$	UPLB	1978

[b] Stop-gap recommendation.

Agronomic Studies

These are studies conducted to refine production practices and reduce and quantify the constraints in peanut growing in various farming systems environments especially in relation to problems such as acid soils,plant nutrition, cropping patterns, tillage and pest and diseases with a view of making these activities as a realistic basis for packaging suitable technology for increase production.

Postharvest Engineering and Storage

The thrust in this area revolves around the development of appropriate post-harvest equipment, and of the improvements of farm practices which are suitable for peanut producers to reduce their post-production losses.

Processing and Utilization

The concerns of this area of research are

- Upgrading of current local processes and products.
- Developing new methods of processing and acceptable new products.
- Removal of natural toxicants.

Socio-economics and marketing

This field of research is probably the most illusive when it comes to the total development process. Nevertheless, the research undertakings are pointed into the direction of

- Alternative marketing and pricing institutions.
- Government incentives and or restraints.
- Market access for small farmers.
- Systems analysis of marketing systems.

PEANUT RESEARCHES

Discipline	No. of On-going as 1984 (Study Equivalent)	Station	Researcher(s)
Varietal Improvement	14	UPLB, BPI-EG	R. Lantican, Ed. Redoña, B. Legaspi
Crop Protection	13	NCPC-UPLB, Entom. Dept. Plt. Path. UPLB, USM	O. Opina, F.C. Quebral, E. Cadapan, F. Pamplona
Cultural Management	4	ISU, CLSU, UPLB	R. Santos, E. Paterno
Post Harvest	-	-	-
Processing	6	ISU, UPLB	R. Santos, E. Escueta
Marketing	1	ISU	R. Santos
Socio-economics	-	-	-
Seed Technology	1	ISU	R. Santos
On-farm trials (Cultural management)	4	UPLB, TCA, ISU, BPI-La Granja, BPI-Tupi	J. Lales, F.Rosete, R. Santos, N. Armones, D. Concepcion, [illegible]
National Cooperative Testing for Peanut	10	10 stations	F.C. Quebral
On-farm trials (variety)	8	BPI-Reg. I, II, III, VII, VIII, IX, XII	M. Hernaez

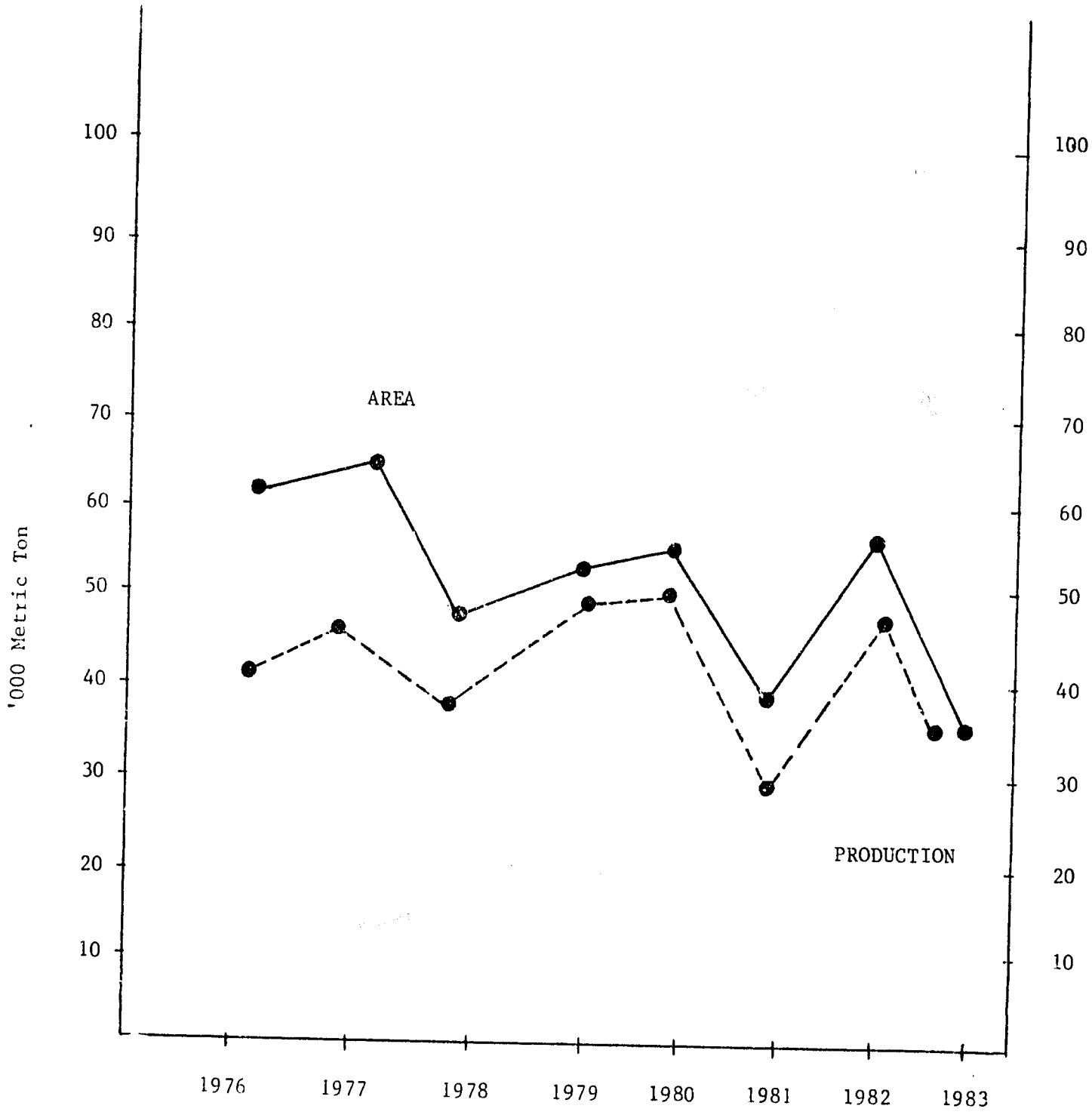

Fig. 1. Production and Area of Peanut, Philippines 1976-1983

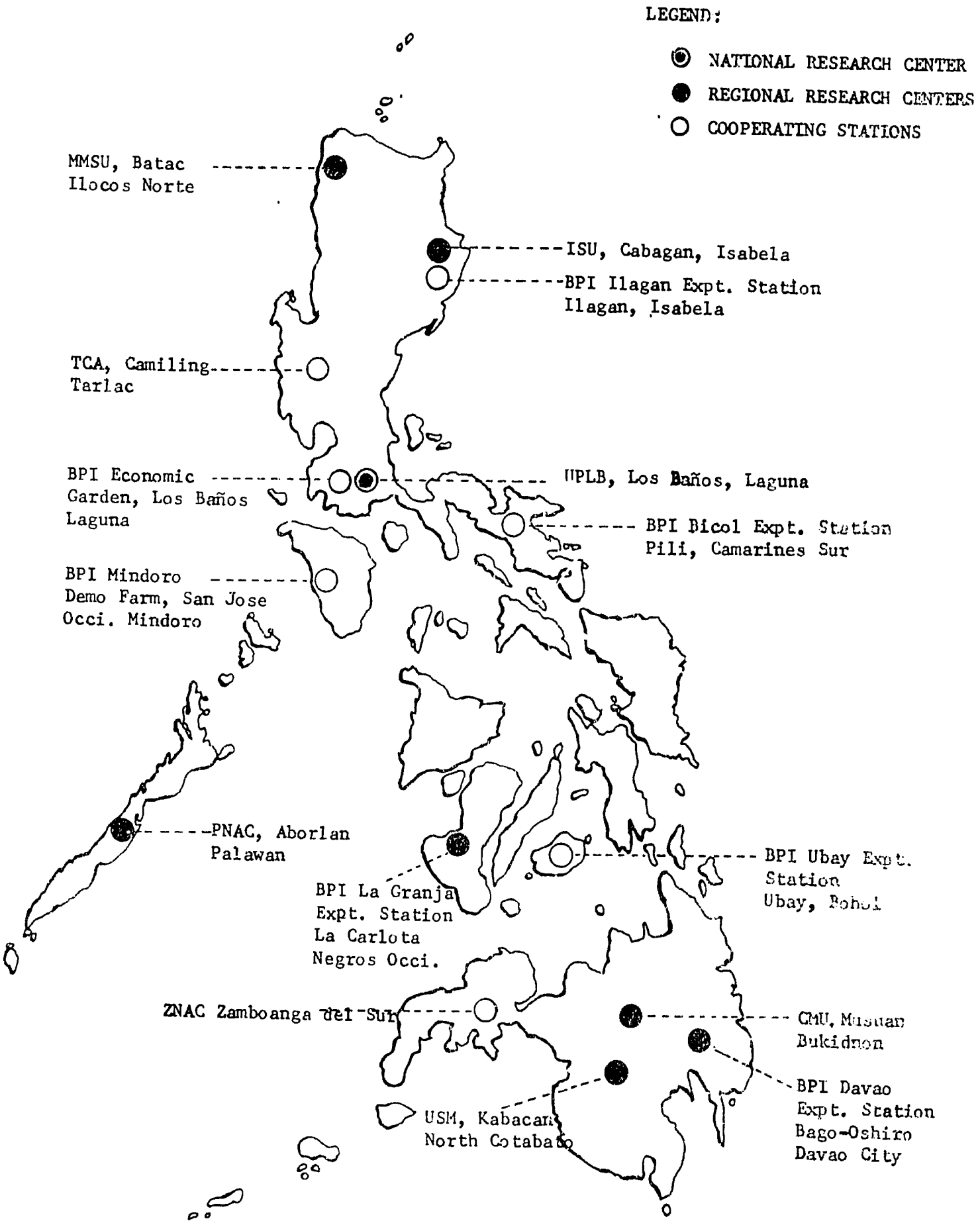

NATIONAL NETWORK OF LEGUME RESEARCH CENTERS & STATIONS

PEANUT VARIETAL IMPROVEMENT PROGRAM IN THE PHILIPPINES[1/]

E. D. REDOÑA and R. M. LANTICAN[2/]

INTRODUCTION

The peanut, Arachis hypogaea L, locally known as 'mani', is one of the most widely-grown grain legume crops in the Philippines. Peanut hectarage in 1982 was estimated at 56,480 hectares and of this, 28,310 hectares (ha) or 50% was located in the Cagayan Valley region (BAEcon, 1983). The national average yield of peanut, however, has remained low. In 1982, the national average yield of peanut was only 0.82 metric tons of unshelled nuts per hectare (BAEcon, 1983), way below the two or more tons/ha yield levels being obtained in other countries such as the United States. The low yield level of peanuts in the Philippines may be due to the traditional low management input given the crop, the use of low-yielding land varieties, the use of peanut as an intercrop to other upland crops like corn rather than as a primary crop, and the lack of disease and insect resistant high-yielding varieties.

Even with a 157% increase in peanut production from 1972 to 1982 (BAEcon, 1983), local production level has not been enough to meet domestic market requirements. In the past decade, the Philippines imported peanut

---

[1/] Paper to be presented in the First National Peanut Consultation and Peanut CRSP review to be held at PCARRD, Los Baños, Laguna on February 7-8, 1985

[2/] Senior Research Assistant, Institute of Plant Breeding, U.P. at Los Baños and Director of Research, U.P. at Los Baños, respectively.

from other countries (NCSO, 1980). A major way of eliminating our country's dependence on peanut imports would be to increase peanut production through the use of superior varieties developed through plant breeding.

PHILIPPINE PEANUT BREEDING PROGRAMS

A. Early works in peanut varietal improvement

Local varietal improvement work on peanut began only in the early 1900s (Consujo, 1916; Silayan, 1918). In involved mainly the evaluation of foreign varieties and cultivars introduced to the country followed by selection and isolation of the best introductions (Unite, 1959). Some of the promising introductions became well established in the country and were given local names by farmers (PCARRD, 1983). This resulted in the proliferation of 'native' varieties many of which were believed to be duplicates (Rodrigo, 1947).

B. The Bureau of Plant Industry-Economic Garden (BPI-EG) Peanut Program

Prior to 1933, peanut varietal improvement studies were undertaken only by individual researchers rather than by research institutions. In 1933, however, the Bureau of Plant Industry-Economic Garden organized a breeding program on peanuts and other field legumes with the objective of developing, multiplying and distributing pure seeds of high-yielding peanut varieties and encouraging their use in diversified farming programs (Unite, 1959). The intensified germplasm collection, screening, and yield evaluation efforts of BPI resulted in the identification of several promising introductions. Among these promising introductions were Virginia Runner, G-41, F334-27, Florispan, PI 12832, F-334-32, B177-19 and Spanish 163287 with pod yields of 1.8 to 2 tons/ha (Lazo et al, 1969).

In 1955, BPI began hybridization work on peanuts. Crosses were made between promising introductions and locally-adapted cultivars. Although hybridization work was done on a limited scale, BPI was able to select an outstanding line, BPI-P9, from a cross between E.G. Red and Fante 17. BPI P-9 was released as a commercial variety in 1971 after 4 years of regional testing (PCARRD, 1983). Aside from BPI-P9, two other recommended varieties namely, E.G. Bunch and E.G. Red, were developed by BPI-Economic Garden using pureline selection methods. E.G. Bunch and E.G. Red are pureline selections from a 'native' variety Vigan, and a U.S. variety, Virginia Runner, respectively. Both varieties were released for commercial production in 1965. However, the release of E.G. Red was considered only as a 'stop-gap' measure.

Although BPI P-9, E.G. Red and E.G. Bunch are high-yielding with pod yields of 1.8-2.1 t/ha, these varieties are susceptible to the country's two major peanut diseases, namely, late Cercospora leafspot caused by Cercosporidium personatum and peanut rust caused by Puccinia arachidis. The BPI peanut breeding program, therefore, has made crosses between disease resistant and high-yielding adapted cultivars. Crosses made recently involved UPL Pn-4, a source of disease resistance, and other selected varieties such as BPI P-9, UPL-Pn2, Tainan No.1, Tainung No. 1 and Gadja (PCARRD, 1983). As a result, BPI has developed several disease-resistant and high-yielding lines. Among these are E.G. 11, E.G. 13, E.G. 17 and E.G. 18 which are presently included in regional yield tests being conducted across the country.

28

C. The University of the Philippines at Los Baños (UPLB) Peanut Program

Peanut varietal improvement research at UPLB began in the 1950's. Early works involved the testing of native and introduced cultivars which resulted in the identification of several promising varieties, mostly bunch types maturing in 105 to 125 days. Among these were local cultivars San Mateo, Zambales, San Mateo No. 3, Vigan Lupog and Kinorales, and introduced cultivars Virginia Jumbo, Valencia, Tenessee Red, Virginia Runner and Virginia Bunch (PCARRD, 1983).

Breeding work on peanuts at UPLB formally started in 1961 under the Department of Agronomy with the aim of developing high-yielding and disease resistant varieties. Initial research focused mainly on germplasm collection, screening and subsequent yield evaluation of the most promising accessions. Disease screening efforts led to the identification of three introduced cultivars from the United States Department of Agriculture which were resistant to late Cercospora leafspot (CLS) caused by Cercosporidium personatum. These cultivars were PI 259747, PI 350680 and PI 341879, all originating from South America (Lantican, 1975). Peanut breeders at UPLB were also able to develop through pureline selection methods a high-yielding variety, CES 101, which was released for commercial production in 1973.

In 1975, the Institute of Plant Breeding (IPB) was created paving the way to the centralization of all crop breeding programs at UPLB. Varietal improvement research on peanut and other field legumes was intensified and a multidisciplinary approach towards breeding for these crops was adapted. The development of varieties with desirable traits such as high yields, disease resistance, insect resistance, high nitrogen

fixing ability, and adaptation/tolerance to acid soils, partial shading and rice-based cropping systems became the general goal of the IPB peanut breeding program.

Since then, IPB germplasm collection efforts have been pursued vigorously to establish a gene pool of a wide genetic base from which to draw genes from which to draw genes for desirable traits. To date, the IPB germplasm pool includes about 1,200 accessions. All of these accessions have been screened for yield and/or other agronomic characters under the upland condition. Several promising accessions were identified and have been included in a series of yield tests. Two outstanding introductions, Moket and Acc. 12 or PI 314817, performed extremely well under local conditions and were released as commercial varieties in 1976 and 1978, respectively. Moket, renamed UPL Pn-2, has pod yields of 1.8-2.1 t/ha and has some resistance to the Sclerotium wilt disease. Acc. 12, renamed UPL Pn-4, has pod yields of 2.0 to 2.5 t/ha and is resistant to late CLS and peanut rust.

Screening of germplasm for disease resistance has led to the identification of several accessions resistant to late CLS and peanut rust. The accessions resistant to CLS are PI 314817, FESR 1, PI 262129, PI 259747, PI 341879, PI 350680, NC Acc. 17133 and EC 76446. Accessions identified to be resistant to rust are PI 314817, FESR 1, PI 341879, PI 298115 and PI 262129. Germplasm screening under lowland, partial shade and acid soil conditions has also been conducted. Promising accessions under these conditions have been included in the hybridization pool.

Hybridization work on peanuts at IPB was initiated in 1975. To date 206 crosses have been made among high-yielding, disease resistant,

large-seeded, high nitrogen-fixing and acidic soil tolerant lines and cultivars. Several lines with high yields, disease resistance, acie soil tolerance and high nitrogen-fixing ability have been selected and some of these lines have been used in the hybridization work. The most promising of these are currently included in a series of yield test being conducted under upland, lowland and partial shade conditions. IPB-bred lines currently in the advanced stage of yield testing are IPB Pn 1-174, IPB Pn 2-25, IPB Pn 12-12, IPB Pn 12-24 and IPB Pn 12-26.

In an effort to obtain valuable genetic information which could be used in local peanut breeding programs, IPB peanut researchers have conducted several quantitative genetic studies on the crop. Abilay and Lantican (1982) using correlation and path coefficient analysis, reported that the harvest index, number of pods per plant, leaf area index, leaf protein content and plant height were desirable characters for predicting high yield of peanuts grown under 40% shading.

Redoña (1984), using a population derived from a 6 x 6 diallel cross of diverse peanut cultivars, studied heterosis and combining abilities for seven quantitative characters, namely, pod and seed yields per plant, number of pods and seeds per plant, weight per pod, weight per seed and height of main axis. Heterosis was observed for certain characters but was often limited in amplitude. It was observed mainly for height of main axis and was generally associated with genetic diversity. It was further observed that a large portion of the genetic variance for each trait resulted from the action of genes with additive genetic effects. Two cultivars PI 262129 and UPL Pn-4 were recommended for use in hybridization

work due to their large general combining ability effects. Seed yield per plant was found to be genetically correlated with pod yield per plant, number of seeds per plant, weight per pod and height of main axis.

Punto and Lantican (1982) used the three-year data of nine cultivars entered in yield trials conducted in 8 locations to measure the magnitude of genotype x environment interaction and determine the stability of the cultivars. All varieties were found to be adapted to lower-yielding or poor environments but only seven were found stable with UPL Pn-4 being the most stable. Seasonal differences in yield among all varieties existed and it was suggested that a specific variety be recommended for a particular season. It was recommended that for an efficient allocation of resources, ecologic testing for peanuts should involve 25 varieties, 3 replications, 8 different locations across the country and 3 seasons of testing.

D. Peanut Research at the International Rice Research Institute (IRRI)

Although IRRI has no breeding program on peanuts, it has included the crop in its cropping systems and varietal testing research. Promising cultivars and lines developed by IPB and BPI have been included in IRRI's multi-location varietal tests conducted under lowland condition. A variety from Burma, M-10, has been identified as the most promising in lowland fields with high tillage practices (IRRI, 1978). M-10 had seed yields 16-26% better than that of UPL Pn-2 and CGS 101. A joint IRRI-IPB project is also presently conducting varietal improvement work of peanuts for rice-based cropping conditions.

RESEARCH NEEDS

Local peanut breeding programs to date have developed six varieties already released for commercial production. All of these varieties belong to the peanut subspecies fastigiata. The BPI peanut breeding program has developed E.G. Ro, E.G. Bunch and BPI P-9 while the UPLB peanut breeding program has developed CES 101, UPL Pn-2 and UPL Pn-4. It is interesting to note, however, that except for BPI P9, all the released varieties are not products of hybridization. Furthermore, except for UPL Pn-4, all the released varieties are susceptible to two major peanut diseases, Cercospora leafspot and peanut rust.

It is therefore evident that much has yet to be accomplished in peanut breeding if we are to come up with a locally 'ideal' peanut variety. To be considered locally 'ideal', a peanut variety should have the following characteristics; high seed yield (at least 3 t/ha), early maturity (90-100 days), resistance to major diseases (CLS, rust, Sclerotium wilt, Aspergillus sp., viruses), resistance to insect pests (leafhopper, cutworm, pod borer, leaf folder), tolerance to stresses (acidic soils, low/high soil moisture, marginal soils), high nitrogen-fixing ability, tolerance/adaptability to cropping systems (rice-based, coconut-based and partially shaded cropping conditions), and high market acceptability (large-seeded, 2-3 seeds per pod, high protein and oil contents). To develop this type of variety, peanut research along the areas of breeding, agronomy, pathology, entomology, microbiology, virology, soil science, physiology and biochemistry have to be undertaken and/or instensified. Each of these disciplines should screen the available germplasm and identify those cultivars possessing

desirable traits. Rapid and efficient screening techniques must be developed. Quantitative genetic studies using populations derived from both intra- and intersubspecific crosses must then be undertaken to determine the variability and heritability of each of these traits, the correlation of the traits with one another and the type of gene action governing the inheritance of each of these character. Studies on the effects of selection, genotype x environment interactions and genotype stability must be conducted. Novel breeding and selection techniques such as the diallel selective mating and traditional procedures such as backcrossing and other modifications of the pureline breeding method have to be tried out and a selection index for peanut should be formulated. The breeding potential of crosses derived from intersubspecific hybridization should be studied and the most efficient ecologic yield testing scheme for peanuts should be identified.

The exploitation of the genetic variability of peanut to the maximum, therefore, remains a challenge to local peanut breeders and other peanut researchers alike. With the concerted and intensified efforts recently being undertaken by local research institutions along the various areas of peanut research and with the linkages being established with international peanut research institutions, notably North Carolina State University and the International Crops Research Institute for the Semi-Arid Tropics (ICRISAT), it would only be a matter of time before local peanut breeding programs would realize their objectives.

LITERATURE CITED

Abilay, R.M. and R.M. Lantican, 1982. Characters associated with yield performance of grain legume crops under partial shade condition, 2. Peanut (Arachis hypogaea L.). Phil. J. Crop Sci. 7:141-144.

Bureau of Agricultural Economics (BAEcon). 1983. Philippine Crop Statistics. BAEcon. Quezon City, Philippines.

Consujo, G.T. 1916. A study on the production of peanuts. Phil. Ag. For. 4: 195-199.

International Rice Research Institute (IRRI). 1978. Annual Report. IRRI, Los Baños, Philippines.

Lantican, R.M. 1975. Peanuts: Screening for disease resistance. Annual Report. UPLB, College, Laguna.

Lazo, F.D., A. Quedding and C.M. Caliwag. 1969. Seven-year peanut variety test. Phil. J. Plant Ind. 34(3-4): 193-211.

National Census and Statistics Office (NCSO). 1980

Philippine Council for Agriculture and Resources Research and Development (PCARRD). 1983. State of the Art: Peanut Research. PCARRD, Los Baños, Laguna.

Punto, N.G. and R.M. Lantican. 1982. Genotype x environment interaction for yield in field legumes: I. Peanut, Arachis hypogaea L. Phil. J. Crop Sci. 7: 94-100.

Redoña, E.D. 1984. Combining ability and heterosis estimates for some quantitative traits in peanut Arachis hypogaea L. Master of Science thesis (unpublished). UPLB, College, Laguna.

Rodrigo, P.A. 1927. Growing peanuts from cuttings. Phil. Ag. 16: 13-18.

Silayan, H.S. 1918. Culture and fertilization affecting the oil content of peanuts. Phil. Ag. For. 6(2-3): 84-97.

Unite, J.O. 1959. The legume crop improvement work of the Bureau of Plant Industry. Plant Ind. Dig. 22(11-12): 6-7.

PRODUCTION MANAGEMENT OF PEANUT[1]

Joveno S. Lales[2]

Peanut, a widely known source of protein and high-quality oil, does not constitute a major component of the average Filipino diet. Yet, local demand has always been greater than local production. Demand has steadily increased from ~~10,850~~ 13,740 MT in 1973 to ~~an estimated 31,700 MT~~ 63,840 MT in ~~1983~~ 1979. Local consumption in 1981 dropped to ~~18,540~~ 20,860 MT which could probably be attributed to high price coupled with limited supply. Total supply in 1981 was completely dependent on local production estimated at 20,860 MT (Appendix Table 1).

Total production fluctuated during the period 1973-1982. Production steadily increased from ~~18,242~~ 15,882 MT in 1973 to ~~47,141~~ 32,540 MT in 1977 but decreased to ~~37,756~~ 26,602 MT in 1978 (Appendix Table 2). Though production increased substantially in 1979 (~~49,248~~ 34,770 MT), it dropped sharply to a low ~~29,597~~ 20,860 MT in 1981. This has been the production trend which was largely influenced by the total area planted to peanut. Although the average yield per hectare slightly increased from 0.74 MT in 1977 to 0.79 MT in 1978, the decrease in total area planted (23.6%) in 1978 was enough to bring down total production during the year. Northeastern Philippines (Region II, a traditional peanut growing area) showed the highest decline in total area planted in 1978 (Appendix Table 3).

Importation likewise fluctuated during the period 1973-1982. Highest volume (29,140 MT) of imported peanut was recorded in 1979 despite the remarkable increase in total production during the year.

---

[1] Paper presented during the First National Peanut Consultation and Peanut-CRSP Review held at PCARRD on Feb. 7-8, 1985.

[2] Assistant Professor, Department of Agronomy, University of the Philippines at Los Baños, College, Laguna, Philippines.

Peanut importation, however, drastically declined (2,440 MT) in 1982.

If given adequate government support, peanut production in the Philippines could flourish not only to the extent of attaining self-sufficiency but may also lead to peanut surplus for export. To be self-sufficient, however, does not absolutely mean displacement of certain economically important crops. Self-sufficiency can simply be attained by improving existing production techniques adopted by local farmers.

RESEARCH STATUS

Production systems for peanut being adopted in the Philippines are classified into two, namely: peanut monoculture and peanut intercropping. For the past 25 years, peanut research has been focused on the cultural requirements of peanut monocrops. Recently, however, research activities aimed at developing cultural techniques appropriate for various peanut intercrops were also initiated.

Peanut Monoculture

Thorough land preparation before planting has been widely claimed quite necessary for better seed germination, seedling emergence, rapid establishment, and ultimately high yield. A number of studies have also demonstrated the beneficial effects of hilling up before flowering. More recent findings, however, show that peanut grown as monocrop after lowland rice performed well under no tillage growing conditions. This practice certainly cuts down production cost although it deserves further evaluation as there may be possibilities of encountering problems related to weed control.

That dry-season peanut crops are better than wet-season-grown peanut have been widely reported. This is primarily attributed to low solar radiation during the wet season, and intolerance of peanut to excess soil moisture. The results of a study on monthly sowing of peanut show that February is the most appropriate time of planting but supplemental irrigation is necessary. Incidentally, limited water supply during the dry season is a common problem among traditional and potential peanut growing areas in the country. It is well established that the most critical stages of growth when water is most

important are germination, flowering, pod development, and pod filling. Except germination, the other critical stages are most prone to the adverse effects of water stress. It thus become very important to properly allocate limited water supply to the critical periods of water need. At present, there is scarcity (if any at all) of information regarding water management for peanut during the dry season.

Research findings show that 50-cm and 60-cm row spacings during the dry and wet season, respectively are optimum and in fact now being recommended. While some studies have shown that rows spaced at 40 cm give maximum yield, such row spacing is not widely adopted simply because of the difficulty in performing subsequent operations such as weeding and hilling up.

Very low yield resulting from high plant density has been widely observed during the wet season. This is mainly attributed to low solar radiation coupled with the plants' tendency to produce excess vegetative portions and few developed pods. Taking full advantage of high solar radiation by increasing plant density during the dry season was also found to have its own limitation. Research findings show that the optimum plant population when there is uncertainty of rainfall during the reproductive stage is 200,000-250,000 plants /ha. This can be increased to 400,000-450,000 plants/ha under optimum water supply.

The unpredictable response of peanut to inorganic nitrogen fertilizers reported in other countries has been also widely observed in the Philippines. The primary reason for this is essentially the same, that is, due the the existence of a functional peanut-rhizobium symbiosis. A number of studies have demonstrated positive response to phosphorus but failed to show similar response to potassium. The results of a recently conducted on-farm fertilizer trial at several locations also show that treatments involving no fertilizer application and very low nutrient rates (7-7-7) gave pod yields comparable to that of the recommended practice (28-28-28). These findings probably strengthen the need to re-investigate the nutrient recommendations indicated in the Philippine Recommends for Peanut (at press). The significance of calcium insofar as pod formation and development are concernedhas been also recognized. Yield increases of about 30% were attained. Findings show that 300 kg gypsum/ha applied just

before hilling up give high pod yield. This is, in fact, now being recommended. But, gypsum having other industrial uses such as fluxing agent, and as retarder in portland cement, is very expensive. Agricultural lime is more available and cheaper than gypsum although its being a possible substitute for gypsum remains to be evaluated.

In several instances, the tremendous potential of Rhizobium sp. inoculants as"synthesizers" of atmospheric nitrogen for plant use has also been demonstrated. A multi-strain Rhizobium sp. inoculant used to inoculate peanut seeds just before planting was found as effective as the application of 30-35 kg N/ha. Other research activities on biological nitrogen fixation being done by UPLB researchers include the evaluation of the persistence of Rhizobium sp. under waterlogged conditions. Initial findings show that the second peanut crop in a peanut-lowland rice-peanut cropping pattern need not be inoculated.

Crop protection as a component of the production management of peanut will not be dealt here in detail. Briefly, however, it can be said that pests if not controlled could cause a complete peanut crop failure. A research activity on integrated pest management approach is being undertaken at UPLB. Similar study was started in 1984 at different locations (farmers' fields) to evaluate various levels of integrated pest control for peanut. Initial results show that maximum level of integrated pest control gives highest yield. Whether or not this is economically feasible remains to be determined.

Peanut Intercropping

Research activities on peanut intercropping have been focused on cultural techniques that maximize crop complimentarity by minimizing competition and partial shading. Studies on manipulating spatial arrangement, crop proportion, seeding rate and time of planting to minimize interspsecific competion were conducted.

Intercropping peanut with corn is probably the most popular practice being adopted by traditional farmers in the Philippines. Pod yield under this system, however, is generally lower than monoculture yield. Yield reduction thus far reported varies with the

crop which was intercropped with peanut. Evidences accummulated show that when peanut has been intercropped with corn, yield reduction was 20-30%; 31% with tomato, and 30-85% with sugar cane. In all crop combinations investigated, land productivity was , however, substantially improved. Other crops with which peanut was intercropped include wheat, cassava, sorghum, upland rice, and certain vegetable crops such as okra and cucumber.

RESEARCH NEEDS

Through the years, the national average yield (less than 1.0 ton/ha) has always been way below the potential yield (1.5-2.5 tons per hectare) of existing recommended peanut varieties. This could be a reflection of either poor management being employed by local peanut growers or slow delivery of locally developed technology to end users.

Another area of concern is the economics of current production management practices. According to the latest estimate of production cost (Philippine Recommends for Peanut, at press) the total cost of producing 2.0 tons/ha is about ₱11,536.00. Certainly, this can not be afforded by small farmers. Existing component technologies should have to be re-examined and if possible alternatives must be formulated. For example, land preparation could probably be brought to minimum. Studies of this kind should be pursued. Fertilizer inputs particularly nitrogen fertilizer might also be reduced by using Rhizobium inoculants. Isolation and production of inoculants that are highly competitive, effective, compatible with existing peanut varieties, and tolerant to certain environmental stresses such as waterlogging, drought and soil acidity should be supported and accelerated. An equally important area of concern pertains to how phosphorus availability in the soil could be improved. Studies related to peanut-micorrhiza association should also be pursued. Cheap substitutes for gypsum should also be sought.

There may also be gradual shifting from export-oriented crops to other crops like peanut. For example, sugar cane is no longer that economically attractive as it was in the past. There are, in

40

fact, some sugar cane growers who are now considering other crops. Certainly, on-farm trials must have to be conducted in these areas as the soil which was continuously utilized for sugar cane production may require some improvements before peanut could be successfully grown. Nonetheless, total displacement of sugar cane is not being recommended. Existing cultural techniques for sugar cane-peanut intercrops should therefore be improved.

Finally, studies leading to the development of appropriate management practices for peanut should continue as long as new varieties are developed.

Appendix Table 1. Local demand, supply, total production and importation of peanut, Philippines, 1973-1983.

YEAR	DEMAND[1]	SUPPLY[2]	TOTAL PRODUCTION	IMPORTATION[3]
1973	13,740	13,740	12,850	890
1974	23,510	23,510	15,210	8,300
1975	33,760	33,800	25,490	8,310
1976	36,780	36,780	28,780	8,000
1977	43,290	43,310	32,540	10,770
1978	36,160	36,310	26,600	9,710
1979	63,840	63,840	34,700	29,140
1980	48,100	48,120	35,150	12,970
1981	20,860	20,860	20,860	-
1982	36,710	36,710	34,270	2,440
1983 Est.	52,240	52,240	35,240	17,000

1/ Demand includes peanut used as feeds food and seeds for planting.
2/ Total supply includes local production and importation.
3/ (-) no data available.

Source: BAECon., NCSO.

Appendix Table 2. Yield (m. t. /ha) and production area (ha) for peanut, Philippines, 1973-1982.

YEAR	YIELD	PRODUCTION AREA
1973	0.55	33,240
1974	0.59	36,700
1975	0.66	54,790
1976	0.67	60,620
1977	0.74	62,720
1978	0.79	47,900
1979	0.91	53,830
1980	0.90	55,140
1981	0.76	38,700
1982	0.87	55,885

SOURCE: BAECon.

Appendix Table 3. Production area (ha) for peanut by region, Philippines, 1973-1982.

REGION	1973	1974	1975	1976	1977	1978	1979	1980	1981	1982
I	4,570	4,580	4,720	5,880	5,890	6,100	6,470	6,580	5,650	5,870
II	10,750	15,670	31,520	34,390	36,850	21,370	25,740	25,990	10,560	28,310
III	7,110	930	940	1,140	1,240	1,300	1,540	1,540	1,550	890
IV	3,210	2,630	4,070	4,250	4,560	4,190	4,040	4,070	3,990	3,950
V	2,840	2,680	2,650	2,330	2,040	1,910	1,890	1,770	1,710	1,660
VI	2,330	2,480	2,190	2,250	2,390	2,560	2,620	3,190	3,180	3,120
VII	3,320	3,180	3,280	4,190	3,830	3,870	3,780	4,050	4,270	4,140
VIII	1,020	1,540	1,440	1,320	1,280	2,280	2,780	2,640	2,540	2,170
IX	180	370	1,000	1,380	1,160	950	920	950	1,090	1,755
X	1,040	990	980	1,110	1,120	1,190	1,370	1,600	1,350	1,180
XI	980	900	1,010	910	850	830	890	980	1,110	1,110
XII	890	750	990	1,170	1,510	1,350	1,790	1,730	1,700	1,730

SOURCE: BAECon.

Utilization of Microbial Associations in Peanut Production*

Erlinda S. Paterno
Associate Professor
Department of Soil Science
College of Agriculture
U.P. at Los Baños
College, Laguna

Introduction

The average yield of peanut in the Philippines is approximately 0.86 mt unshelled peanut per hectare. This low yield has been attributed to among others, the employment of low level of technology by peanut farmers. In order to attain a yield of approximately 2.0 tons per hectare, the application of 4 bags 14-14-14 or 28 kg each of N, P_2O_5 and K_2O per hectare has been recommended. In 1982, a total of 56,450 hectares were planted to peanut. At the recommended rate of 28 kg N/ha, the total nitrogen requirement would cost approximately ₱24.5 million in terms of ammonium sulfate. With the present economic situation, the country can ill afford this large input.

A cheap way of supplying crops with nitrogen is through biological nitrogen fixation. Peanut has the capacity to utilize atmospheric nitrogen through its association with the root nodule bacteria, Rhizobium. However, biological nitrogen fixation as source of nitrogen for peanut production has not been fully exploited in the country.

---

*Paper presented during the First National Peanut Consultation and Peanut - CRSP Review held at PCARRD Headquarters on February 7-8, 1985.

Response of Peanut to Inoculation with Rhizobia

Experiments conducted in cooperation with the NifTAL Project of the University of Hawaii showed increases in yield due to inoculation. Table 1 shows that in Guimbalaon clay loam inoculated peanut supplied with phosphorus and potassium at 30 kg/ha produced the highest grain yield (1.61 t/ha) during the 1982 dry season. The result clearly demonstrated the advantage of inoculation combined with minimal level of phosphorus and potassium over that of complete application of nitrogen, phosphorus and potassium at maximum level without inoculation. Yield response due to inoculation did not differ between the two fertility levels. At the farm fertility level, the application of 30 kg N/ha produced yield equivalent to that of inoculation. At flowering inoculation at the two fertility levels significantly increased nodule number over the other treatments. On the other hand nodule fresh weight and dry matter yield per plant did not differ among treatments.

During the wet season of 1982 an increase in grain yield, nodule number and fresh weight and dry matter yield was observed. As in the dry season, the highest grain yield (2.31 t/ha) was obtained from inoculated plots supplied with 30 kg/ha of phosphorus and potassium. Inoculated treatments, at any fertility level, gave significantly higher yields, nodule number and fresh weight, and dry matter yield over the uninoculated and N-fertilized treatments.

In 1983 dry season, the response of peanut to inoculation was significant in terms of grain yield. Inoculation with minimum levels of phosphorus and potassium was sufficient to increase yield significantly from 1.34 t/ha to 1.45 t/ha. Increasing the levels of phosphorus and

46

Table 5. Yield and nodulation of peanut (BPI-P9) as affected by inoculation and rate of fertilizer application in Guimbalaon clay loam in 1982 and 1983.[1/]

Treatments	Yield (t/ha) Dry Season	Yield (t/ha) Wet Season	Nodule number/ plant at flowering Dry Season	Nodule number/ plant at flowering Wet Season	Nodule fresh wt./ plant at flowering (g) Dry Season	Nodule fresh wt./ plant at flowering (g) Wet Season	Dry matter yield plant at flowering (g) Dry Season	Dry matter yield plant at flowering (g) Wet Season
				1982				
0-30-30	1.26 b	1.93bc	37 cd	47 d	0.13 a	0.27 b	8.1 a	9.0 ab
30-30-30	1.38 ab	1.96 bc	37 cd	50 c	0.13 a	0.28 b	8.4 a	9.2 ab
Inoc-30-30	1.61 a	2.31 a	45 a	57 a	0.14 a	0.32 a	8.7 a	9.8 a
0-100-100	1.26 b	1.79 c	36 d	47 d	0.12 a	0.25 bc	8.0 a	8.8 b
100-100-100	1.31 b	1.74 c	36 d	46 d	0.11 a	0.23 c	8.2 a	8.7 b
Inoc-100-100	1.40 ab	2.16 ab	40 b	53 b	0.13 a	0.29 ab	8.6 a	9.5 ab
				1983				
0-30-30	1.34 cd	2.46 a	38 bc	76 b	0.13 a	0.34 c	7.6 cd	10.1 cd
30-30-30	1.38 bc	2.46 a	39 ab	67 b	0.14 a	0.36 b	7.9 abc	10.6 bc
Inoc-30-30	1.45 a	2.57 a	41 a	99 a	0.14 a	0.39 a	8.2 a	11.4 a
0-100-100	1.31 d	2.45 a	37 c	79 ab	0.13 a	0.31 d	7.4 d	9.8 d
100-100-100	1.36 cd	2.46 a	38 bc	65 b	0.13 a	0.32 d	7.8 bc	9.0 e
Inoc-100-100	1.43 ab	2.49 a	40 a	85 ab	0.14 a	0.36 b	8.1 ab	11.0 ab

[1/] Means followed by the same letter are not significantly different at 5% level based on DMRT.

potassium to 100 kg/ha together with inoculation was not beneficial. Application of nitrogen fertilizers was also inferior to inoculation in this soil. There was a positive significant response to inoculation in terms of nodule number and dry matter yield at flowering but none in terms of nodule fresh weight.

Peanut yields, nodule number and fresh weight, and dry matter yield generally increased in the wet season of 1983. All treatments produced yields ranging from 2.45 t/ha to 2.57 t/ha. However, significant response to inoculation was apparent only at the flowering stage when nodule number and fresh weight and dry matter yield of inoculated treatments were higher compared to the other treatments. Grain yields of inoculated peanuts were also higher but not significant over other treatments.

The mean yield, nodule number and fresh weight and dry matter yield per plant at flowering of peanut for two seasons per year in Guimbalaon clay loam are presented in Table 2. Significant response to inoculation was noted in 1982. Inoculated treatments produced yield increases of 23.97% and 16.38% over uninoculated and N-fertilized plants at the farm fertility and maximum fertility levels, respectively. The highest grain yield, nodule number and fresh weight, and dry matter yield were produced by inoculated plants fertilized with 30 kg/ha of phosphorus and potassium, followed by the inoculated plants fertilized with 100 kg/ha of phosphorus and potassium. For the same parameters, the mean values of the control and N-fertilized plots at both fertility levels were comparable.

The mean yield, nodule number and fresh weight and dry matter yield of peanut were higher in 1983. However no significant differences in

Table 2 Mean yield and nodulation of peanut (BPI-P9) as affected by inoculation and rate of fertilizer application in Guimbalaon clay loam for two seasons in 1982 and 1983.[1/]

Treatment	Mean Yield (t/ha)	Mean % increase in yield over uninoculated treatment	Mean nodule number per plant at flowering	Mean nodule fresh weight per plant at flowering (g)	Mean dry matter yield per plant at flowering (g)
			1982		
0-30-30	1.21 c	-	42 d	0.20 b	8.6 bc
30-30-30	1.28 bc	5.78	43 c	0.21 b	8.8 abc
Inoc-30-30	1.50 a	23.97	50 a	0.23 a	9.2 a
0-100-100	1.16 c	-	41 de	0.19 bc	8.4 c
100-100-100	1.18 c	1.72	40 e	0.17 c	8.5 c
Inoc-100-100	1.35 b	16.38	46 b	0.21 b	9.1 ab
			1983		
0-30-30	1.90 a		57 c	0.24 c	8.9 c
30-30-30	1.92 a	1.05	53 d	0.25 b	9.3 b
Inoc-30-30	2.01 a	5.79	70 a	0.27 a	9.8 a
0-100-100	1.88 a	-	58 c	0.22 d	8.6 cd
100-100-100	1.91 a	1.60	59 c	0.23 cd	8.4 d
Inoc-100-100	1.96 a	4.26	62 b	0.25 b	9.6 ab

[1/] Means followed by the same letter are not significantly different at 5% level based on DMRT.

yield were obtained. Yield of inoculated treatments were higher but the percent increase in yield over uninoculated control were quite low (4.26 to 5.79%). Nodule number and fresh weight and dry matter yield per plant at flowering varied significantly among treatments. Highest values were found in plots inoculated at the farm fertility level followed by plots inoculated at the maximum fertility level

In San Manuel silt loam the lowest grain yield of peanut (0.34 t/ha) was produced by uninoculated plants (0-30-30) during the 1982 dry season (Table 3). All other treatments had yield levels ranging from 0.51 to 0.66 t/ha. Results show that a higher yield response is attainable with inoculation plus the application of phosphorus and potassium. Equally higher yields over the uninoculated plots (0-30-30) were obtained when fertilizer rate was increased to 100 kg/ha, with or without inoculation.

At the farm fertility level, the yields of peanut from the uninoculated, N-fertilized, and inoculated treatments during the 1982 wet season were higher than thoseobtained during the dry season. Highest yield obtained during this cropping was from the inoculated plots fertilized with maximum rates of phosphorus and potassium. This was followed by inoculated plots at farm fertility level. Results from this wet season cropping indicate chat maximum phosphorus and potassium supplements may increase yield of inoculated peanut. Nodulation also improved during the wet season. Highest significant values observed were from inoculated plots at both fertility levels.

In 1983 dry season peanut yield improved over that of 1982 dry season. Response to inoculation was significant as shown by the yield

Table 3. Yield and nodulation of peanut (BPI-P9) as affected by inoculation and rate of fertilizer application in San Manuel silt loam in 1982 and 1983.[1/]

Treatment	Yield (t/ha)		Nodule number/ plant at flowering		Dry matter yield/plant at flowering (g)	
	Dry Season	Wet Season	Dry Season	Wet Season	Dry Season	Wet Season
			1982			
0-30-30	0.34 b	0.67 ab	29 c	73 b		
30-30-30	0.51 ab	0.55 b	38 ab	72 b		
Inoc-30-30	0.57 a	0.74 a	44 ab	113 a		
0-100-100	0.57 a	0.58 b	37 b	75 b		
100-100-100	0.66 a	0.56 b	38 ab	59 b		
Inoc-100-100	0.58 a	0.78 a	52 a	109 a		
			1983			
0-30-30	0.71 d	0.50 d	44 ab	49 bc	7.8 b	7.6 b
30-30-30	0.86 c	0.55 b	44 ab	44 c	9.2 b	8.4 b
Inoc-30-30	1.02 ab	0.82 a	53 ab	54 ab	11.5 a	10.6 a
0-100-100	0.73 d	0.48 b	42 b	53 ab	8.6 b	7.4 b
100-100-100	0.94 bc	0.56 b	43 ab	50 abc	11.2 a	10.2 a
Inoc-100-100	1.09 a	0.84 a	55 a	58 a	11.6 a	11.0 a

[1/] Means followed by the same letter are not significantly different at 5% level based on DMRT.

data. At both fertility levels the yield ranking was in the order "inoculated" > "N-fertilized" > "control". The nodule number and dry matter yield at flowering were consistently higher for the inoculated treatments at both fertility levels.

The yields of peanut during the wet season, 1983, were lower than during the dry season of 1983. Yields ranged only from 0.50 to 0.85 t/ha. Similar significant response to inoculation was noted during this season. Highest yields were produced by inoculated plots, followed by N-fertilized plots, then the control plots at both fertility levels. Nodulation and dry matter yield per plant at flowering were higher when plants were inoculated at any fertility level.

In Table 4 the 1982 mean yield of inoculated peanut supplied with minimum levels of phosphorus and potassium was significantly higher than the uninoculated and N-fertilized plants. At the maximum levels of phosphorus and potassium the yield of inoculated treatment was higher than but not significantly different from the others. A higher percent increase in yield (27.45%) due to inoculation was observed at the farm fertility level than at the maximum fertility level. In 1983 mean yields of peanut were higher for all treatments than 1982. At both fertility levels, inoculation significantly increased yields over the control and N-fertilized treatments. Inoculation brought about from 50.82% to 53.97% increase in yield over the control. Addition of nitrogen at either 30 or 100 kg/ha did not signficantly benefit the plants. In this soil results of two year trials indicate that inoculation plus minimum rates of phosphorus and potassium increased peanut yield significantly. In both years inoculation also significantly produced more nodules than the other treatments. In 1983 the mean dry matter yield of inoculated plants at both fertility levels were significantly higher than other

52'

Table 16. Mean yield and nodulation of peanut (BPI-29) as affected by inoculation and rate of fertilizer application in San Manuel silt loam for two seasons in 1982 and 1983.1/

Treatment	Mean Yield (t/ha)	Mean % increase in yield over uninoculated treatment	Mean nodule number per plant at flowering(g)	Mean dry matter yield per plant at flowering (g)
		1982		
0-30-30	0.51 b	-	51 b	
30-30-30	0.53 b	3.92	55 b	
Inoc-30-30	0.65 a	27.45	78 a	
0-100-100	0.56 ab		[illegible] b	
100-100-100	0.61 ab	[illegible].17	46 b	
Inoc-100-100	0.68 a	17.24	80 a	
		1983		
0-30-30	0.61 c		46 bc	7.7 b
30-30-30	0.66 bc	8.20	44 c	8.7 b
Inoc-30-30	0.92 a	50.82	43 ab	11.1 a
0-100-100	0.63 bc	-	47 bc	8.1 b
100-100-100	0.74 b	17.46	46 bc	10.7 a
Inoc-100-100	0.97 a	53.97	56 a	11.3 a

1/ Means followed by the same letter are not significantly different at 5% level based on DMRT.

The limited data show that in most cases yield increases were either equal to or better than the application of 30 kg N/ha. However, in some areas yields were still way below the yield potential of the crop even with inoculation. This indicates that fixed nitrogen is not sufficient to supply the nitrogen needed by the plant to attain maximum yield and that certain factors limit nitrogen input through nitrogen fixation. These factors include environmental and management practices that affect either the rhizobia, the host plant or the symbiotic relationship between the bacteria and the host plant.

Through the Peanut CRSP project, we are trying to identify these factors and develop management practices that will maximize nitrogen input through the peanut - Rhizobium symbiosis and at the same time achieve maximum yield.

This is being done initially by evaluating the need for inoculation, identifying Rhizobium strains effective in symbiosis with selected peanut germplasm and determining nitrogen fixation and survival of peanut rhizobia in different cropping systems.

Inoculation Requirement of Peanut Cultivars

Compatibility studies between Rhizobium strains and peanut cultivars/lines were conducted in the growth chamber. In the first experiment, peanut cultivars BPI P9, Robut 33-1, UPL Pn 2, UPL Pn 4 and Rhizobium strains CB 756, P3, P4, P7, TAL 1000, TAL 1371, NC 92 and 32 H1 were used. The top four strains in terms of dry matter yield were CB 756, TAL 1000, NC 92 and P3. In the second experiment, 11 Rhizobium strains were tested against 16 peanut cultivars/lines. The first run

showed that the top five Rhizobium strains in terms of dry matter yield were RP 182-13, NC 123, TAL 1000, NC 92 and P3.

The response of three peanut cultivars to inoculation with different Rhizobium strains was tested in a field experiment in Lipa clay loam soil in Calauan, Laguna in cooperation with San Miguel Corporation. Three cultivars, namely, Virginia, Robut 33-1 and UPL Pn 4 and Rhizobium strains TAL 1000, NC 92, 32 H1, P3 and CB 756 were used.

The cultivars did not differ significantly in terms of primary root nodulation and total nitrogenase activity at seven weeks after emergence. No significant differences in nodulation, nitrogenase activity, nitrogen uptake, dry matter yield and grain yield were observed among the Rhizobium strains used.

The interaction effect of variety and Rhizobium strain on grain yield is presented in Table 5. UPL Pn 4 inoculated with 32 H1 produced the highest yield of 2801 kg/ha while the lowest was strain P3. With Robut 33-1, the highest yield was obtained with NC 92 and the lowest was the uninoculated treatment.

Another field experiment was conducted during the 1985 dry season to evaluate the response of 2 peanut cultivars BPI P9 and UPL Pn 4 to inoculation with either Rhizobium strains P3 and CB 756 and to fertilization.

No significant differences in nodulation and dry matter yield were observed between the 2 peanut cultivars at 2 weeks after emergence. However, BPI P9 formed lesser but heavier nodules.

55

Table 5. Mean interaction effects of variety and *Rhizobium* strains on the grain yield (kg/ha) of peanut planted in Lipa clay loam (1984 Dry Season).[1/]

Strains	VARIETIES		
	Virginia	Robut 33-1	UPL Pn 4
TAL 1000	513 c	832 bc	2631 a
NC 92	412 c	1005 b	2679 a
32 H1	405 c	488 c	2901 a
P3	581 bc	646 bc	2510 a
CB 756	558 bc	592 bc	2723 a
Uninoc	628 bc	460 c	2733 a

[1/] Means followed by the same letter are not significantly different at 5% level based on DMRT.

56

Nodulation was slightly affected by N fertilizer application and Rhizobium strain (Table 6). Addition of 30 kg N/ha significantly reduced nodulation of peanut inoculated with strain P3 but not those inoculated with strain CB 756.

Symbiotic Competence of Peanut Rhizobia

A field experiment was conducted to determine nitrogen fixation and survival of peanut rhizobia in rice based cropping system.

Peanut cultivars BPI P9 and Robut 33-1 were used with Rhizobium strains CB 756, NC 92 and P3. In the first crop of peanut significantly more nodules were formed by variety BPI P9 than Robut 33-1 at 2 weeks after emergence (Table 7). At 7 weeks after emergence no significant differences in nodule number and dry weight, dry matter yield and N uptake were observed between the two varieties although higher total nodule number and dry weight and dry matter yield were noted in BPI P9. Nitrogenase activity was significantly higher in BPI P9 than Robut 33-1.

No differences in nodulation, nodule dry weight and dry matter yield were observed among the strains. Specific nitrogenase activity, however, was higher in plots inoculated with CB 756 or NC 92 (Table 8).

Interaction between varieties and strains on the symbiotic characters tested were likewise not significant.

Grain yield, however, was significantly different between varieties but not among strains (Table 9). Robut 33-1 produced significantly higher mean yield than BPI P9. On the other hand, the ranking of Rhizobium strains based on yield was CB 756 > NC 92 > P3.

Table 6. Effect of inoculation and fertilization on the nodulation and dry matter yield at 2 weeks after emergence of peanut grown in Lipa clay loam during the 1985 dry season.1/

Treatment	Strain	Nodule number/5 plants			Nodule dry weight (mg/5 plants)			Dry matter yield (g/5 plants)
		Primary root	Secondary root	Total	Primary root	Secondary root	Total	
Uninoculated + 0-30-30		202 b	34 bc	236 b	133 a	5.3 c	138.3 a	3.68 abc
Inoculated + 0-30-30	P3	248 a	58 ab	306 a	134 a	9.5 bc	143.5 a	4.14 ab
	CB 756	167 b	65 a	232 b	116 ab	14.0 ab	130 ab	3.12 c
Inoculated + 30-30-30	P3	170 b	18 c	188 b	71 c	3.0 c	74.0 c	4.00 ab
	CB 756	194 b	36 bc	230 b	72 c	7.9 bc	80.0 c	4.25 a
Inoculated + 15-15-15	P3	176 b	28 c	204 b	104 b	6.3 bc	110,3 b	3.94 ab
	CB 756	164 b	33 bc	197 b	59 c	20.1 a	79.0 c	3.40 bc

1/ Means followed by the same letter are not significantly different at 5% level based on DMRT.

Table 7. Mean effect of variety on the nodulation, nitrogenase activity and dry matter yield of peanut grown after rice in Lipa clay loam (1984, Dry Season) 1/

Parameters	VARIETY		
	BPI P9	Robut 33-1	CV (%)
Nodule no./plant			
2 WAE 2/			
Primary root	11 a	7 b	29.48
Secondary root	3 a	2 b	75.02
Total	14 a	9 b	20.94
7 WAE			
Primary root	17 a	21 a	50.87
Secondary root	33 a	24 a	51.05
Total	50 a	42 a	39.44
Nodule dry weight at 7 WAE (mg/plant)			
Primary root	44 a	52 a	32.03
Secondary root	42 a	33 a	70.50
Total	86 a	84 a	43.89
Specific nitrogenase activity at 7 WAE (umole C_2H_4/g dry weight nodule/hour)	86.42 a	74.14 b	17.60
Dry matter yield at 7 WAE (g/plant)	8.07 a	7.01 a	24.02

1/ For each parameter, means followed by the same letter are not significantly different at 5% level based on DMRT.

2/

59

Table 8. Mean effect of strain on the specific nitrogenase activity of peanut planted after rice in Lipa clay loam (1984, Dry Season).[1/]

Rhizobium strain	Specific nitrogenase activity at 7 WAE[2/] (umole C_2H_4/g dry nodule/hour)
CB 756	91
NC 92	86
P3	70
Uninoculated	66

[1/] Means followed by the same letter are not significantly different at 5% level based on DMRT.

[2/] WAE - Weeks After Emergence

Table 9. Mean yield (kg/ha) of two peanut cultivars inoculated with three *Rhizobium* strains.[1/]

Strain	VARIETY		
	BPI PS	Robut 33-1	Mean
CB 756	654	886	776 a
NC 92	642	830	736 a
P3	550	892	722 a
Uninoc	522	841	683 a
Mean	602 b	866 a	

[1/] Means followed by the same letter are not significantly different at 5% level based on DMRT.

60

Initial results showed that NC 92 formed only 9 per cent of the nodules in either BPI P9 or Robut 33-1. Serotyping of nodules for CB 756 and P3 has not been completed.

This observation indicates either poor competition of NC 92 with the native rhizobia or its inability to survive in the soil. It is possible that an increase in rate of inoculation or a change in inoculation method could improve survival of the strain.

Experiments at BIOTECH showed that soil inoculation at the rate of 10^6 cells/seed increased the competitive ability of the peanut rhizobia. Strain CB 756 showed a nodule occupancy of 18 per cent when inoculated to the seed at 10^5 cells/seed. When the inoculum was applied directly to the soil, the proportion of nodules formed by the inoculum strain was significantly increased to 60 per cent.

Conclusion

Our limited data show a good potential for the utilization of biological nitrogen fixation in peanut production. However, further work should be done in defining environmental conditions and management practices which would enhance the process.

There is also a need to study the survival, competition and persistence of rhizobia for monoculture crops and in cropping systems involving legumes. Data obtained will be utilized to establish inoculation methods and frequency of inoculation for different cropping systems.

61

There are indications of interaction between peanut cultivars and *Rhizobium* strains. Hence, simultaneous selection of *Rhizobium* strains and peanut cultivars should be continued.

Rhizobium strains and peanut cultivars that are symbiotically efficient under stressed environments should likewise be identified and/or developed.

PEANUT ENDOMYCORRHIZAE

Lina L. Ilag[1/]

Endomycorrhizae are mutually beneficial associations between plant roots and vesicular-arbuscular fungi. The mycorrhizal fungus obtains organic nutrients from the plant. The plant, in turn, benefits in the form of better growth and higher yield. This occurs as the vesicular-arbuscular mycorrhizal (VAM) fungus, through a network of extramatrical mycelium increases the absorption capacity of the roots thus enhancing the uptake of various soil-derived nutrients.

The extent to which particular plants depend on mycorrhizae is largely governed by their root morphology. Plants with limited root-soil contact due to coarse, hairless roots or with few, short root hairs benefit greatly from the network of mycorrhizal hyphae extending from the mycelium inside the root to the sorrounding soil (Hayman, 1980)

Mycorrhizae also enhance nitrogen fixation by rhizobia presumably by providing the needed phosphorus for nitrogen fixation. Mycorrhizal plants have also been observed to tolerate stress factors in the soil (such as salinity, acidity, drought and certain plant pathogenic organisms) much better than non-mycorrhizal plants. As Trappe et al. stated (1984) mycorrhizae are "necessary components of most plant systems".

The potential benefits that could be derived by properly harnessing the mycorrhizae include less dependence on expensive fertilizers and the utilization of marginal or problem soils for crop production.

[1/] Associate Professor, Department of Plant Pathology, University of the Philippines at Los Baños, College, Laguna, Philippines

Prior to the inception of the Peanut CRSP Program, there had been practically no work on peanut mycorrhizae in the Philippines. Our work commenced in June 1983 as part of the project on biological nitrogen fixation. The project considered the following objectives relevant to mycorrhizae:

1. Conduct a collaborative survey of endomycorrhizal fungi predominant in the peanut rhizosphere roots and weed seeds from peanut fields in the Philippines.
2. Compare efficiencies of mycorrhizal fungi from natural peanut colonizations to the effeciencies of other known species in pot cultures.
3. Establish the effectiveness of selected species for alleviating salt stress, drought, flooding and acidity.
4. Establish the effectiveness of selected species for increased uptake of phosphorous.
5. Determine whether mycorrhizae can affect peanut production against soil-borne diseases prevalent in the Philippines.
6. Determine the effectiveness of mixed rhizobia and mycorrhizal fungi for increase P uptake and other synergistic relationships.

Research Activities and Findings

A. Survey, collection, isolation and identification of VAM fungi

Rhizosphere soil from peanut fields and root samples were collected from the provinces of Isabela, Cagayan, Cotabato, Albay, Laguna, and Zambales during 1983 and 1984. Soils planted to other

crops were also sampled at Davao, Cebu, Ilocos Norte, La Union, Rizal and Laguna. About 100 g of a composite sample were wet seived according to the method described by Gerdemann and Nicolson (1963). Spores were backwashed into separatory funnels and collected on filter papers. Collected spores were mounted in water or lactophenol and observed under the microscope.

Relative spore counts ccunducted on the various soils showed that peanut soil from San Marcelino, Zambales contained the most diverse kinds and the highest number of spores (Table 1). The sampled area had a cropping pattern consisting of peanut, sweet potato, tomato, peanut. Spores were collected 38 days after sowing UPL Pn2 peanuts in the sandy loam soil with a pH of 6.0. The VAM fungi observed in this site, as identified by Ruth Taber, were Glomus mosseae, G. multicaule, G. monosporum, G. microcarpum, Sclerocystis rubiformis, S. sinuosa and Gigaspora spp. Davao soil planted to 'Saba' banana also contained numerous spores but there was less diversification of species. The fungi found in this soil were Glomus mosseae, G. multicaule and G. intraradices, the latter appeared to be confined to roots as no extramatrical spores were found. Evidence of G. Caledonium and G. convolutum were seen in Cagayan soils previously planted to peanut. Low spore counts were noted in rice, corn and peanut fields under high water regimes. Spores sieved from these areas particularly after rice were deteriorated and often unidentifiable. Most of the areas sampled contained low population of VAM fungi (Table 1).

A variety of VAM species had been observed associated with peanuts (Taber, 1984; Nicolson and Schenk, 1979; Stichler et. al., 1972).

B. Mycorrhizal formation by various VA fungi in peanut and their effect on growth

Nine fungal species (Glomus fasciculatum, G. mossea, G. etunicatum, G. intraradices, G. deserticola, G. macrocarpum and unidentified isolates 83-086, 83-133 and PZm-1) were tested in pot experiments for their ability to form mycorrhizae in three peanut cultivars (UPL Pn-2, UPL Pn-4 and NC 7).

The fungal inoculum (with the exception of G. deserticola in which 2 g colonized roots were used) consisted of 50 spores per size 8 pot. The spores were surface-sterilized in 0.5% sodium hypochlorite for 3 min and rinsed with sterile distilled water prior to their use for inoculation. Three replicates were provided for each treatment including controls with no inoculum added.

Among the fungi tested, only G. deserticola give promising results. Peanut inoculated with the fungus developed mycorrhiza and exhibited generally better plant growth than uninoculated plants four weeks after sowing (Table 2).

Mycorrhizal UPL Pn-4 plants were taller and had a greater biomass than non-mycorrhizal plants. Inoculated UPL Pn-2 plants were taller than the uninoculated control. NC 7 exhibited an increased root weight over the control but less plant height and weight.

These results indicate that different cultivars respond in various ways to G. deserticola. The lower biomass exhibited by some mycorrhizal plants may be explained by the plant's inability, at this rather early stage of infection, to have recovered from the initial effects of fugal colonization.

The beneficial effect of G. deserticola on UPL Pn-4 continued until harvest as plant height, weight of roots and shoots were higher in inoculated plants than in the control (Table 3). This better growth performance was also reflected in increased seed weight of mycorrhizal plants (Table 4).

The effect of G. deserticola on cultivar UPL-Pn-2 at harvest was also essentially beneficial as inoculated plants were taller and had heavier shoots (Table 3) and yielded higher seed weight (Table 4) compared to uninoculated plants. All these occured in spite of the lower root weight (Table 3) which may indicate efficiency of the mycorrhizal association.

The mycorrhizae formed by G. deserticola appeared to greatly enhance nodulation in peanut. The nodule dry weight of mycorrhizal UPL Pn-2 was 36% more than the non-mycorrhizal plants; that of UPL-Pn-4 was 54% more (Table 4).

C. Multiplication of VA spore inoculum in culture

The formation of mycorrhizae in greenhouse and field studies depends a great deal on the availability of viable, pathogen-free VAM inoculum. The lack of adequate quantities of inoculum is a

major bottleneck in the wide-scale commercial use of endomycorrhizae. Subtantial inoculum is often required to obtain rapid mycorrhizal formation early enough in the growing season to be able to supply the crop's demand for phosphate and other soil-derived nutrients.

There is therfore an acute need to find a method of producing appreciable quantities of pure VAM fungal inoculum.

To this end spores of Glomus epigaeus were surface-sterilized, rinsed, planted on 1% water agar and allowed to germinate. After two weeks when most of the spores had germinated, surface-sterilized seeds of Okra, Amaranthus sp. and Portulaca sp. were planted on the agar amidst the hyphal growth from the germinated spores. Among the seeds used, the best results were obtained with Amaranthus as most cultures with okra and Portulaca seeds were contaminated. Amaranthus seeds germinated 2-5 days after planting in agar. One month after the fungal spores were transferred unto agar slants and two weeks after the seeds were planted, some Amaranthus seeds, when crushed and observed under a microscope, were found to contain numerous spores of G. epigaeus. Such seeds were dead as they did not continue to grow after germination and fungal colonization. Remains of the emerged seedling appeared disintegrated when viewed under a microscope.

It appears that G. epigaeus obtained nutrients from the germinated seed as the fungus invaded the redicle and hypocotyle then found its way inside the testa of the seed and produced spores therein. Germinated seeds that were not infected had no spores. Seeds that did not germinate contained no spores, either.

Plans for the Succeeding Years

Plans for the future include:

(1) evaluation of more VA fungi for their effectiveness in improving the growth and increasing yields of peanut;

(2) identification of host variety - VAM fungus isolate combinations that are effective in marginal soils and under stress conditions;

(3) gauge the effectiveness of combined mycorrhizal fungi and rhizobia in increasing productivity;

(4) determine the effect of soil pH, moisture and temperature on mycorrhizae;

(5) evaluate the persistence of introduced VAM species in the soil;

(6) find improved means of increasing VAM inoculum;

(7) maintain a collection of elite VAM fungi.

Literature Cited

TRAPPE, J. M. R. MOLINA and M. CASTELLANO. 1984. Reactions of mycorrhizal fungi and mycorrhiza formation to pesticides. Ann. Rev. Phytopathol. 22: 331-359.

HAYMAN- D.S. 1980. Mycorrhiza and crop production. Nature 287: 487-488.

GERDEMANN, J. W. and T. H. NICOLSON. 1963. Spores of mycorrhizal Endogone extracted from soil by wet sieving and decanting. Trans. Br. Mycol Soc. 46: 235-244.

NICOLSON, T. H. and N.C. SCHENCK. 1979. Endogonaceous mycorrhizal endophytes in Florida. Mycologia 71: 178-198.

STECHLER, C.R., R.E. PETIT and R.A. Taber. 1972. Peanut mycorrhizae a fungus-root interaction. J. Am. Peanut Res. Educ. Assoc. 4: 148-155.

TABER, R.A. 1984. Nycorrhizae. In Compendium of Peanut Diseases. The American Phytopathological Society. St. Paul, M.N. pp. 58-59.

Table 1. Soil evaluation for presence of VAM fungal spores

Location	Plant	Relative Abundance of spores
Cebu	Corn	low
Los Baños, Laguna	purslane	low
Cotabato	peanut	moderate
Davao	banana ('Saba')	high
Davao	Banana ('Latundan)	moderate
Cotabato	cowpea	low
Cotabato	corn	moderate
Ilocos Norte	cowpea	moderate
La Union	mungbean	moderate
Albay	peanut, mungbean, cowpea	low
Los Baños, Laguna	peanut	moderate
Isabela	peanut	moderate
Cagayan	peanut	low
Binangonan, Rizal	weeds	moderate
Luisiana, Laguna	coconut	low
San Marcelino, Zambales	peanut	high
IRRI, Los Baños, Laguna	rice, peanut, corn	none to low

71

Table 2. Effect of Glomus deserticola on plant growth parameters and degree of mycorrhizal formation in peanut cultivars UPL Pn-2, and UPL Pn-4 and NC-7 four weeks after sowing in pods.

Treatment	Plant Height (cm)	%change vs control 2/	Fresh weight of roots (g/plant)	% change vs control	Fresh weight of whole plant (g/plant)	% change vs control	VAMF colonization rating 1/
Inoculated with G. deserticola							
UPL Pn-2	24.2	10 (≠)	1.50	8 (-)	8.9	14 (-)	3b
UPL Pn-4	23.3	13 (≠)	1.85	68 (≠)	9.1	94 (≠)	3b
NC 7	20.3	4 (-)	1.50	7 (≠)	10.6	33 (-)	2b
Uninoculated control							
UPL Pn-2	22.0	-	1.60	-	10.3	-	0
UPL Pn-4	20.8	-	1.10	-	4.7	-	0
NC 7	21.2	-	1.40	-	15.8	-	0

1/ 2b = 6-26% of roots colonized by VAM fungus with relatively large colonization sites rather uniformly distributed through the colonized roots

3b = 26-50% of roots colonized with large colonization sites uniformly distributed through the colonized roots

0 = no mycorrhizae formed

2/ (≠) = more than the control

(-) = less than the control

Table 3. Effect of Glomus deserticola on plant height and on weight of shoots and roots of peanut varieties UPL Pn-2 and UPL Pn-4 at harvest.

Treatment	Plant Height (cm)	%change vs control*	Fresh weight of roots (g/plant)	% change vs control	Dry weight of shoot (g/plant)	% change vs control
Inoculated with G. deserticola						
UPL Pn-2	42.4	46 (↗)	1.4	13 (-)	3.0	114 (↗)
UPL Pn-4	41.6	4 (-)	1.9	36 (↗)	3.5	59 (↗)
Uninoculated Control						
UPL Pn-2	29.0	-	1.6	-	1.4	-
UPL Pn-4	40.1	-	1.4	-	2.2	-

* (↗) = more than the control

(-) = less than the control

Table 4. Effect of Glomus deserticola on nodule and seed weight and on extent of mycorrhizal colonization in peanut at harvest.

Treatment	Fresh weight of seed (mg/plant)	% increase over control	Nodule dry weight (mg/plant)	% increase over control	VAMF colonization rating*
Inoculated with *G. deserticola*					
UPL Pn - 2	2510	29	140	367	3a
UPL Pn - 4	2547	13	123	54	3a
Unioculated control					
UPL Pn - 2	1950	-	30	-	0
UPL Pn - 4	2250	-	80	-	0

* 3a = 26-50% of roots colonized with small colonization sites widely scattered along the roots.

0 = no mycorrhiza formed

PEST MANAGEMENT STUDIES FOR PEANUT IN THE PHILIPPINES[1/]

Eliseo P. Cadapan[2/]

1. Introduction:

Satisfactory management of plant pests (arhropod pests, pathogens and weeds) would require adequate knowledge of the following: 1) Identity of the pests involved their biology, ecology and nature of damage; 2) distribution, occurence, population dynamics and density; 3) appropriate techniques in evaluating pests population density and damage potential; 4) estimation of their damage potential in relation to peanut yield or the critical damage threshold (ETL); 5) level of natural control; and 6) the availability of artificial control methods (resistant varieties, biological control agents, pesticides and etc).

Based on these informations, a review of the researches (published and unpublished) on peanut pests was made to identif the status and gaps in peanut protection researches and management program as a part of an overall effort to develop and implement a viable peanut production program in the country.

Research proposals to fill-in the research gaps identified by the reporter and the bibliography on peanut pests in the Philippines are included.

1/ A review of the studies on pests (insects, pathogens, and weeds) of peanut and some recommendations to improve the pest management research and development program for peanut pests in the Philippines, presented at the First National Peanut Consultation and Peanut CRSP Review, February 7-8, 1985 at PCARRD, Los Baños, Laguna

2/ Assist. Prof., Department of Entomology, UPLB, College, Laguna.

II. The status of the peanut pests management in the Philippines.

A. Disease pathogens

A1. General review

Peanut diseases in the Philippines were first reported by Reinking in 1918. Since then diseases had been recognized to be important in peanut production in the country. Researches (published and unpublished) were made on peanut diseases (bibliography) focused mostly on Cercospora arachidicola and Cercosporidium personatum fungal pathogens (cercospora leaf spot) and the peanut rust, (Puccinia arachidis). There are a number of pathogens associated with peanut and other grain legumes but only nine are considered major pests in the country (Table 1). The first two are the black spot, caused by C. arachidicola, (early leaf spot) and C. personatum (late leaf spot) and the peanut rust caused by Puccinia arachidis are considered very serious. Except for these two, no biological and ecological studies had been made on the other pathogens affecting peanut plants in the field.

A2. Specific Diseases

A2.1 Black spot or cercospora leaf spot

First reported by Baker in 1914 and by Reinking in 1918 as Septogloeum arachidis Poc. This is the most common and serious disease of peanut in the Philippines. It occurs throughout the year especially during the rainy season. It was reported to be caused by Cercospora personata by Roldan and Querijero in 1939. It was known by this name until 1981 (Paningbatan and Ilag, 1981) when for the first time two causal organisms, Cercospora arachidicola

Table 1. Major peanut diseases and their control.

Disease (Pathogen)	Disease Management information available					
	Status*/	Damage Potential (%)	Distribution	Biology Ecology	Natural enemy	Artificial control rate (lbs/100 gal. water)
1. Black spot Cercospora leaf spot	1	50	widespread	partial		Daconil 2787 1.5
Cercospora arachidicola				"	-	Benlate 25, 0.5
Cercosporidium personatum	1	80	"	"	-	Pant Vax 75W .9 Resistant varieties
2. Plant rust Puccinia arachidis			-	-	-	Same as black spot +Carbendazol, resistant varieties
3. Stem and Root Rot	4	50	localized	-	-	Captan, thiramaxor chloromel 3g/kg seeds.
Rhizoctonia solani Sclerotium rolfsii						
4. Damping-off Pythium spp Fusarium spp. Rhizoctonia solani Sclerotium rolfsii Phytophthora sp.	5	-	localized	-	-	Same as in 3
5. Bacterial wilt Pseudomonas solanacearum	6	-	-	-	-	-
6. Peanut mottle	3	-	-	-	-	-
7. Peanut rosette	3	-	-	-	-	-
8. Peanut stripe**	2	-	-	-	-	-
9. Nematodes	5	-	-	-	-	- Fumigation

*/ Rank with the range of 1 to 10; 1 very serious 10 can be tolerated.

1/ no information

** reported by Dr. Reddi (a virologist from ICRISAT) in Cagayan, Isabela to affect 100% of the peanut in the field.

77

Hori (early) and Cercosporidium personatum (Berk. and Curt. Deighton), causing leaf spot of peanut were discovered.

Initially, minute yellow spects appear on the lower leaves turn to tan then brownish for C. arachidicola or blackish for C. personatum. The lessions caused by the former were bigger and contained 3 times more spores than the former (Paningbatan and Ilag, 1981). Spots could either be circular or irregular and can also appear on the petioles, stipules, stems, vines, and pegs of the peanut. Severe infection can cause defoliation and death of young plants. The pathogens exist in stroma form to produce conidia (Anonymous, 1977). Quebral et al, (1976) evaluated fungicides to control leaf spot and found Daconil 2787 at 1.5 lbs/100 gal water, Benlate at 0.5 lb/100 gal water combination of Benlate and Plant Vax 75-W at 0.4 and 0.9 lbs. per gal water, respectively and Dithane M-45 to be effective. Alcantara (1983) also found Delsene Mx and Dithane M-45 to be effective against leaf spot and rust of peanut applied three times at 14 days interval starting from the appearance of the disease symptoms.

The resistance of peanut varieties to the 2 pathogens causing leaf spot of peanut were reported by Paningbatan and Ilag in 1981 and in 1984. They stated that the resistance of cultivars to C. arachidicola and C. personatum markedly differ and hinted that possibly, resistant characters to each fungus may be inherited independently. They also observed that infection frequency and growth rates were reduced by 300% and 400%, respectively, in the resistant cultivar, P1 259747, compared with the susceptible variety, CES 101.

An extract of a common plant mimosine was reported to inhibit conidial and uredospores germination of cercospora and rust respectively (Ebuenga, 1979).

A2.2 Peanut Rust

The peanut rust is rapidly becoming a serious pest of peanut especially during the dry season. This disease is caused by Puccinia arachidis. The biology and ecology of this pathogen has not been studied (Anonymous, 1977).

The disease is recognized by an orange-red blister-like pustule on both leaf surfaces. Reddish brown fruiting bodies are formed in these pustules. Uredospores infect plants. In the advanced stage of infection, the pustule turns dark brown, leaflets curl and dry-up then fall off (Anonymous, 1977).

Evaluation of fungicides for leaf rust control in UPLB and Negros Island showed that only Benlate and Carbendazole, Plant vax and Pyracarbolid combinations were effective against leaf rust. However, Pyracarbolid at the rate of 1g/100 gal. water was still phytotoxic (Quebral, et al, 1976). According to Opina (1983), if enough inoculum at an early stage of peanut development is present, the onset of rust epedemics can occur about 21 days after planting (DAP). The logistic phase of rust epidemics is about 21 days after the onset or about 45 DAP. The mid-time epidemics is about 65 DAP, and the terminal phase is at 90DAP. He further showed that unprotected plots could incurr a potential seed yield loss of 80%.

In 1984, Opina also studied the frequency of fungicide application for the control of rust. He reported that Mancozeb (Dithane

M-45) and Benomyl (Delsene Mx) or Benlate at 1.0 kg a.i./ha satisfactorily controlled peanut rust. However, Mancozeb was more economical. In addition, the stated that 1 application was not effective. An optimum of 3 application at 14 days interval starting from the appearance of the diseases were necessary when the disease occured early (24DAP) but only 2 application of the same interval if the disease occurred late (after 30 DAP). He further stated that peanut production would not be viable without peanut rust control.

A2.3 Stem and Root Rot of Peanut (Anonymous, 1977)

This is caused by *Rhizoctonia solani* Kuhn or *Sclerotium rolfsii* Sacc. This organisms may also cause damping-off of seedlings, wilt or blight of shoots, rot of pads, stems and roots. Poorly aerated soil and weedy areas can enhance infection.

The affected plants would show drooping of foliage and loss of the normal green color. A white coarse mat of dense fungal growth of mycelium may be seen on the infected parts and in the soil immediately surrounding the diseased parts. Later, white and round sclerotial bodies are formed which would turn buff or brown. This would cause the death of the above ground part. Over fifty (50) percent infection in the field had been reported.

To control this diseases, plant in a well drained and soil avoid thick seeding. Treat seeds with Captan, Thiram or Chloroneb at 185 g/cav. of seeds.

Trichoderma species, a fungus, was found to suppress mycelial development of *S. rofsii*.

A2.4 Damping-off (Anonymous, 1977).

This disease may be caused by Pythium spp., Fusarium spp., Rhizoctonia solani, Sclerotium rolfsii and Phytophthora spp. The plants are attahced either before or after germination. The disease is common during the rainy season.

Damping-off can be controlled by treating seeds with Captan (Arthocide 50), Thiram (Arasam SF), Carboxin (Viravax) and Chloronel (Demosam) all at 185 grams per cavan of seeds.

A2.5 Bacterial wilt

This is caused by Pseudomonas solanacearum E.F. Smith and can only be controlled by planting resistant varieties or avoid planting on soils contaminated by P. solanacearum (Anonymous, 1977).

A2.6 Other fungal pathogens.

Elauria (1982) described the morphology of Pithomyces maydicus (Sacc.) M.B. Ellis and isolated this organism from naturally infected peanut leaves. The pathogen induced dark brown spots with light brown centers similar to the cercospora leaf spot.

Stored and processed peanut seeds were assayed by Paguirigan (1971) in the laboratory and she reported that even newly harvested fresh or dried peanuts had 100% fungal infectional. Dried shelled seeds had more fungi than fresh seeds. Some of the fungi groups she found were: Aspergillus glaucus, A. fumigatus, A. tamarii, A. flavus, A. niger, and A. achraceus.

In a similar study, Gutierrez (1982) found 7 fungal genera and a peanut mottle virus associated with stored peanut seeds. The later was found in the embryo and cotyledon of the seed and can infect the plant during the seedling, flowering and pod formation. She also reported that the peanut mottle virus is transmitted by sap inoculation or by the aphid vector, Aphis craccivora Koch,

A2.7 Peanut mottle

This is the most prevalent virus diseases of ground nuts in the country. Tapay (1976) isolated and studied this virus. He found that the virus is seed-borne and can be transmitted by sap inoculation, seed and by the aphids, Aphis craccivora Koch, A. gosypii Glover and Myzus persicae Sulzer. The virus can only infect 4 legume species: mungo, cowpea, soybeans and peanut.

The system and nature of this virus has been described (Anonymous, 1977). The diseased plants usually turn lighter green than the normal, interspersed with dark green "islands" and the leaf surface appears corrugated. Seeds are very much reduced in size and shrivelled. The virus is a flexible filamentous rod-like particle measuring from 670-740 X 12-13 um. It can only live for 3 days in vitro and it can lose infection when exposed to a temperature of 65°C for 10 minutes and when diluted to 10-3 or stored for more than 48 hours at room temperature.

A2.8 Peanut Rosette

This is considered the most destructive virus disease of peanut (Anonymous, 1977). Infected plants show severe stunting, bushy appearance and produce scanty pods, discolored and cracked seeds, chlorotic leaves usually interspersed with many minute green specks. This disease is seedborne and sap transmitted. The virus has an isometric particle, 23-30 um in diameter and is stable *in vitro*. It is not infective when exposed to 90°C for 10 minutes and at 10-5 dilution 3 weeks after, at room temperature.

A2.9 Peanut stripe

Although no studies had been made on this disease, it is mentioned here for the first time. Dr. Reddi, a virologist from the International Crop Research Institute for the Semi-Arid Tropics (ICRISAT), in Hyderabad, India, passed by Cagayan and Isabela last year (1984), and he found that peanut plants in the field were 100% infected by this virus (Communication through Dr. Lina Ilag). This may explain why the average peanut yield in Region I is less than 1 tons per hectare.

A2.10 Nematodes

The role of nematodes in peanut production had not been well established as in other field legumes. However, *Rotylenchelus reniformis* had been reported to feed and cause stunting of peanut plants (Bajet, 1973, Castillo et al, 1976; Castillo, 1971). *Meloidogyne arenaria* was also reported by Dr. Valdez (Castillo et al, 1976) to feed on peanut in pots but was not associated with peanut in the field.

Castillo and his co-workers (1976) reported the following nematodes to be associated with peanuts : Helicothylenchus sp., Hemicycliophora sp., Hoplolaimus seinhorsti, Pratylenchus sp, Rotylenchus sp.

Castillo and his co-workers (1977) found that R. reniformis population on peanut CES 101 was low throughout the year (dry and wet seasons) and this nematode did not affect peanut seed yield, although low populations of this nematode significantly reduced the yield of cowpea, mungbean and soybeans.

B. Weeds

Weeds as pest of peanut are poorly studied. Most of the studies made were on screening of herbicides against the major weeds of peanut. If uncontrolled it appears that weeds are the most serious pest of peanuts compared to pathogens and insects with about 80, 50, and 40% reduction of peanut seed yield respectively.

The effect of different periods of competition on peanut yield (CV. CES 101) at different levels of fertilization, seedling ratio, planting season and location was studied by Punzalan and Vega (1972) and they reported that the competition tolerated by peanut was influenced by the fertilizer, location and season of planting but independent of the seeding rate. They further stated that peanut could tolerate an average of 4 and 6 weeks of weed competition without adverse effect of yield in fertilized and unfertilized soils respectively. In College, Laguna, the crop was not affected within 6 weeks of weed competition but appeared to withstand an average of 4 weeks only in Ilagan, Isabela where weed infestation was greater. They also found that peanut showed greater competing ability with in a weed free period of six weeks from planting regardless of fertilizer application, seeding rate, location and season. The weeds that emerged after 6 weeks did not reduce peanut yield.

Of the control methods recommended, hand weeding is still the best and economical when labor is available (Fabio and Robles, 1982). Among the weedicides tested, Trifluralin gave the best result (Punzalan, 1972).

The response of peanut to the different rate of diphenamid (Enide 50 W) at varrying soil moisture levels was evaluated by Vinagrera

and Robles (1981) and they found that 4 to 6 kg/ha of diphenamid with 3-6 days frequency of watering gave good control of weeds.

When Rotboella exultata was the predominat weed, the used of pendimethalin followed by hand weeding gave satisfactory control of weeds. However, hand weeding was least expensive (Fabro and Robles, 1982).

Fabro and Robles (1982) also reported that Pendimethalin (Herbadox) at 2-3 liters per ha. (pre-emergence) was effective in contro controling the following weeds of peanut: R. exultata, E. Leucine indica, E. chinolloa colona A. moranthus spinosus, Cleome rutidosperma, Portulaca oleracea and Trianthema portulacostruon. However, it was not observed to control Cyperus rotundus and ipomea triloba.

Recently, Paller (1985) screened new herbicides for selective post emergence control of granss weeds on peanut (personal farm unfunded research) and he found that onecide applied as pest emergence gave the best result against grasses but did not control brood leafed weeds.

Dr. Robles and co-workers (personal communication) are currently screening post-emergence weedicides (Selectone and Onecide) against R. exaltata and other grasses associated with peanut.

C. Arthropods

There are over a hundred insects associated with legumes (cowpea, mungbean, peanut and soybean) in the Philippines. However, a closer look at peanut at any given place and time showed that less than 10 species (Table 2) are considered pests.

Before 1982 most of the published and unpublished researches on peanut insect pests dealt on screening of insecticides. For example Pascual (1958) reported the use of chlordane and aldrin to control Leucopholis irrorata Chev. grubs and earwigs respectively. The former is no longer a problem on peanut in the field and the latter is an effective predator. He further stated, however, that there was no significant differences between the yield of treated and untreated plants. At the same year (1958), Villaflores (1958) also reported the used of dieldrin and heptachlor to control L. irrorata and the earwig.

Sanchez and Rosales (1970) reported that Lannate, coded Velsicol 506, Folidol, Cidial, Gusathion A, and Thiodan controlled all the foliage insect pests of peanut effectively but did not control insects attacking the underground parts. However, there were not differences in the seed yield of treated and untreated plants. The insect pest mentioned were: feeding on the underground parts; earwigs, termites, and grubs; feeding on the above ground parts; cutworm (Spodoptera litura F.), corn semi-looper (Chrysodeixes chalcytes, Esper), corn earworm (Helicoverpa armigera, Hardwick), Leaf folder (Homona sp.) aphids (Apis craccivora), planthoppers (Empoasca biguttula Ishida) and the springed larvae.

Table 2. Insect pests of peanut, Mean % yield reduction and information need in the management of insect populations

Common Name	Scientific Name	Mean % yield Reduction	Studies on Biology and Ecology	E.T.L.	Natural Control	Artificial Control
1. black bean aphid	Aphis craccivora Koch	-	partial	-	partial	partial
2. corn earworm	Helicoverpa armigera Hbn.	-	partial	-	partial	partial
3. common cutworm	Spodoptera litura Fabr.	-	partial	-	partial	partial
4. leaf folders	Homona coffearia Nietner	-	partial	-	partial	partial
5. leaf hoppers	Homona spp.	-	partial	-	-	partial
6. leaf miners	Stomopteryx subsicuella	-	-	-	-	-
7. pod borer (bean pod borer)	Maruca testulalis	-		-	-	partial
8. semi looper	Chrysodexis chalcites	-	partial	-	partial	partial
9. stink bug	Nezara viridula	-	partial	-	partial	partial
10. Tussock moth	Dasychira mendosa	-	partial	-	partial	partial

The most recent insect control recommendation (Castillo 1981) is inadequate. The following statement is an example:

> "Most of the pests attacking peanuts can be controlled by furadan, a systemic insecticide in granule form which is usually applied at planting. Supplemental contact insecticides at recommended rates are applied once damage is starting to be visible.

C_2. Mite and Pollinators

The biology and habits of Tetranychus kanzawai Kishida were determined on 4 peanut varieties (de Jesus, 1982). BPI P_9 was more resistant than CES 101.

The application of pesticides did not affect the pollinators in the peanut field (Josue, 1984).

C_3. Peanut CRSP project (Started July, 1983 to December, 1984, Cadapan, 1983, 1984).

The title and highlights of the projects funded by Peanut CRSP are briefly summarized here below:

$C_{3.1}$. Yield potential and resistance of promising lines, Phil. seed board recommended varieties and native varieties against the major insect pests.

1. NC_7 and NCGP343 were resistant to thrips, leafhoppers, leaf-folders, cutworms, tussock moth, and to peanut rust and leaf spot. $UPLPN_2$ and IPB PN 12-24 were resistant to leafhopper and cutworm, respectively (progress report, 1983). NC varieties, IPB PN 12-24, IPB PN 12-12 and IPB PN_2-25 showed antibiotic effect on S. litura and D. mendosa larvae.

89

2. $UPLPn_2$, IPBPn2-25, IPBPn 12-24, NCGP343, and CES 101 $UPLPN_2$, IPBPn2-25, IPBPn 12-24 were the top high yielders at UP CES and Negros Oriental respectively (Annual report 1983-84).

Varietal screening data and seed yield were burned at Tuguegarao with the building of Cagayan Integrated Agricultural Development Project (CIADP).

$C_{3.2}$. The effect of the different degrees of leaf damage at different stages of plant development on the yield of peanut (Annual report, 1983-84 and Table 3).

1. The reproductive stage from pod development to seed development (R_3-R_5) was the stage most susceptible to leaf damage (row mean).
2. Mechanical leaf damage of 12.5, 25, 50, 75, and 100% resulted to 11, 24, 29, 33 and 78% seed yield reduction, respectively (column mean).

$C_{3.3}$. The effect of different planting dates and plant density on the density and damage of insect and on the yield of peanut.

1. Insect population density and damage increased as the date of planting was delayed. Highest insect population was recorded in the November planting. The density of insect pest and their damage were positively correlated with the density of plants (Annual Report 1983-84).
2. The highest yield of $UPLPN_2$ was obtained when planted in October 15. Highest yield was obtained when plants were planted closer (500,000 plants/hectare).

Table 3. Mean seed yield (tons/ha) of BPI P_9 defoliated at different degrees on different stages of development (September-December 1984)

Stage of Plant Damaged	Percent Leaf Damage						Total	Mean	% Yield Reduction
	0	12.5	25.0	50	75	100			
V_E-V_N	1.84	1.48	1.37	1.33	1.28	1.21	8.51	1.42	9.15
R_1-R_2	1.52	1.50	1.31	1.29	1.29	0.86	7.97	1.33	16.54
R_3-R_5	1.47	1.32	1.01	0.92	0.92	0.78	6.41	1.07	42.90
R_6-R_9	1.57	1.41	1.33	1.25	0.95	0.95	7.46	1.24	23.39
All Throughout	1.24	1.21	1.12	1.16	1.09	0.48	6.30	1.05	45.71
Total	7.64	6.92	5.14	5.94	5.73	4.28			
Mean	1.53	1.38	1.23	1.19	1.15	0.86			
% Yield Reduction		10.87	24.39	28.57	33.04	77.91			

$C_{3.4}$. Survey on the occurrence and abundance of the major peanut insect pests and their natural enemies.

1. The following were observed to be the major pests of peanut in decreasing order of occurrence and importance.

   a. Leaf folders - Homona coffearea Nietner

   b. common cutworm - Spodoptera litura Fabr.

   c. leafhoppers - Empoasca sp.

   d. leaf miner - Stemopteryx subsecivella

   e. bean pod borer - Maruca testulalis Geyer (new record)

   f. black bean aphid - Aphis craccivora Koch

   g. pod borer - Helicoverpa (Heliothis) armigera Hubn.

   h. Tussock moth - 3 species but 2 are most important:

      Dasychira mendosa

      Orgyia postica australis

   i. bean leaf roller - Lamprosema (Hedylepta) indicata (new record)

2. A number of parasitoids and insect pathogens were observed:

   a. Telenomus pacificus on Nezara viridula eggs (new record)

   b. Trichogramma on Homona coffearea (new record)

   c. Apanteles sp. on Chrisodeixes and Spodoptera larvae

   d. Tachinid parasite of D. mendosa (new record)

   e. Chrysopa sp. on A. craccivora

   f. Menochilus sexmaculatus on A. craccivora

   g. A virus disease on S. litura

   h. Metarrhizium sp. and Beauveria bassiana on Helicoverpa

Mean seed yield reduction due to insect pest damage was estimated to be about 39% (Table 4)

92

$C_{3.5}$. The effect of two calcium sources on insect population density and damage and yield of peanut.

1. The two main calcium sources, gypsum ($CaSO_4 \cdot 2H_2O$) and calcic limestone ($CaCO_3$) at one fourth to two times the recommended rate applied at planting and at bloom did not affect insect population and insect damage rating but had increased peanut seed yield as high as 76% (Table 4).
2. Calcium treated plants showed early susceptibility to peanut rust and leaf spot.

$C_{3.6}$. Efficacy of selected insecticides and Bacillus thuringiensis (Dipel) against the major insect pests of peanut.

1. The frequency and amount of insecticides can be reduced without affecting their efficacy against the major insect pests of peanut.

   Dipel a microbial insecticide reduced insect leaf damage by 50% compared with the control.

$C_{3.7}$. Economic threshold level determination of major insect pests of peanut.

1. The effect of mechanical damage on yield (Section C3.2).
2. Consumption rate (on going)

$C_{3.8}$. Insect pest population dynamics (ongoing)

1. Bi-monthly planting on pots in the field.
2. Insect monitoring by sex pheromones with sticky trap and net trap (This has high potential to reduce Helicoverpa (Heliothis) population).

$C_{3.9}$. Biology and ecology of major insect pest (on going).

Table 4. Mean shelling percentage and mean pod and seed yield (tons/ha) of the peanut variety BPI-P9 at the UPCES September 15, 1984 to December 31, 1984.

TREATMENT[b/]	WITH PEST CONTROL[a/]				NO PEST CONTROL			
	Shelling Percentage	Yield Pod	Yield Seed	% Yield Increase	Shelling Percentage	Yield Pod	Yield Seed	% Yield Increase
1. 1/4 RR-$CaSO_4.2H_2O$	72.3	3.63	1.90	15.2	68.9	2.06	1.42	31.5
2. 1/2 RR-$CaSO_4.2H_2O$	71.5	3.00	2.14	29.7	72.3	2.31	1.67	54.6
3. RR-$CaSO_4.2H_2O$	73.0	3.26	2.40	45.4	72.0	2.00	1.44	33.3
4. 2x RR-$CaSO_4.2H_2O$	74.1	3.60	2.67	61.8	76.7	2.39	1.83	69.4
5. 1/4 RR-$CaCO_3$	73.1	2.40	1.75	6.1	72.7	1.71	1.24	14.8
6. 1/2-$CaCO_3$	73.3	2.80	2.05	24.2	71.5	1.75	1.25	15.7
7. RR-$CaCO_3$	73.5	2.68	1.98	20.0	71.5	2.35	1.68	55.6
8. 2X RR-$CaCO_3$	74.0	3.25	2.41	46.1	73.1	2.45	1.79	65.7
9. $CaCO_3$ at planting	73.5	3.13	2.30	39.4	73.2	2.60	1.90	75.9
10. Control	70.7	2.34	1.65	-	69.5	1.56	1.08	-
Mean[c/]	72.9	3.00	2.13	-	72.1	2.12	1.53	

a/ With appropriate pest control against diseases, weeds and insect pest of peanut.

b/ RR - Recommended Rate (4.5 grams/plant) $CaSO_4.2H_2O$ - Gypsum $CaCO_3$ - Calcic limestone

c/ Mean % reduction in seed yield due to insect damage = mean seed yield in A minus the seed yield in in B over the mean seed yield in B x 100.

Thus, $\frac{2.13 - 1.53}{1.53} \times 100 = 39.2\%$

$C_{3.10}$. Damage potential of major insect and mite pests.

Based on this review, the percent yield reduction due to insect, pathogen, and weeds were 39, 65, and possibly 100% respectively.

Calcium application can increased the seed yield of peanut by 76% but the role of calcium on the population of macro-and microoorganisms associated with peanut should be established.

III. Problems Encountered:

A. Highly trained research assistants and cooperators to be stationed at the peanut growing areas outside of Los Baños are unavailable.

B. As usual, irrigation and material inputs were inadequate.

C. Coordination and centralization of utilities that can be shared like transport vehicle, sheller, stripper (if available) and experimental plots so that the management of the crop shall be at its optimum efficiency.

IV. Plans of the Succeeding Years:

1. Study the biology and ecology of the arthropods of peanut in the Philippines.
2. Evaluate the effect of some cultural practices on the density and damage of arthropod pests and their natural enemies and on the yield of peanut.
3. Establish adequate techniques for sampling and estimating field population of the different arhtropod pests of peanut and their natural enemies.
4. Determine the economic threshold levels of the major arthropod pests of peanut.

5. Develop and package artificial control strategies in managing arthropod pests of peanut in the Philippines.
6. Continue to evaluate peanut varieties/promising lines/cultivars for resistance to the major insect pests of peanuts and integrate these varieties into the arthropod pest management system for peanut in the Philippines.
7. Integrate this arthropod management package into the peanut management program and test this program in the farmers' field.
8. Train peanut farmers and peanut extension workers on how to grow and utilize peanut profitably in the Philippines.

V. Recommendation

1. Establish peanut research on pest management at the different peanut growing areas (Isabela, Cagayan, Central Luzon, Bicol, Visayas and Mindanao).
2. Researches on the management of peanut weeds and pathogen should be conducted. The role of viruses and other pathogens (nematodes) should be established.
3. Establish pest management information on all major pests of peanut:
   a. Biological and ecological information
   b. Pest identity, nature and role in peanut yield
   c. Simplified and adequate technique in estimating pest populations
   d. Establish economic injury level or pest critical level.
   e. Information on the natural control level
   f. Development of artificial control techniques that are relatively safe and economical and which are locally available.

96

4. Coordination and cooperation with other peanut researchers are necessary to reduce experimental cost and increase efficiency.
5. The peanut CRSP project should be extended and expanded.

97

LITERATURE CITED

AND

BIBLIOGRAPHY

Peanut (Arachis Hypogaea L.) Pests in the Philippines

A. Diseases

Alcantara, M.C. 1983. Effects of fungicides and the frequency of application in the control of peanut rust Cercospora leaf spot complex. Unpublished B.S. thesis, UPLB

Anonymous. 1911. Diseases of Peanuts. Philipp. Agr. Forest. 1:84.

_____. 1966. Soil fumigant protects crops from nematodes. Agr. Los Baños. 6:16.

_____. 1967. Farm tips from Los Baños. Fumigate your soil against nematodes. Agr. Ind. Life. 29:14.

_____. 1974. Four virus diseases of legumes discovered. Modern Agr. Ind. p. 18.

_____. 1977. Proceedings of the symposium on Philippine Plant Diseases. Philipp. Phytopath. pp. 123-126.

Baker, C.F. 1914. A review of some Philippine plant diseases. Philipp. Agr. Forest. 3: 157-164.

Bajet, N.B. 1973. Identification of Rotylenchus sp. isolates on mungo peanut and soybean. B.S. thesis, UPLB.

Benigno, D.A. and F.C. Cubral. 1974. The virus of diseases of vegetables and legumes in the Philippines. Proc. Conf. Plant Prot. Trop. Subtropical areas. 14-15 Nov. 1974. BPI, Mla. p. 570-582.

_____ and D.R. Pua. 1975. Getting to know the virus diseases of peanut. Agr. Los Baños: 14:1, 16.

Castillo, M.B. 1975. Plant parasitic nematodes associated with mungbean, soybean and peanut in the Philippines. Phil. Agr. 59:91-99

Castillo, M.B. 1971. Reniform nematode, Rotylenchus sp. in mungo, soybean and peanut soil at the UPCA Central Exp. Station, Philipp. Phytopath. 7:61-67.

Castillo, M.B., T.T. Reyes and R.G. Davide. 1976. Host index of plant parasitic nematodes in the Philippines. UPCA Tech. Bull. 33, 32 p.

Castillo, M.B., M.B. Arceo and J.A. Litsinger. 1977. Population dynamics of plant parasitic nematodes. I. Rotylencholus reniformis in a poorly drained soil and its effect on yield of field legume. Phil. Agr. 61: 238-252.

Clara, F.M. 1985. A report on plant diseases. Plant Ind. Dig. 8:25-27.

Cortado, R.V. 1965. Studies on the effects of spray fungicides for the control of block spot of peanuts. Plant Ind. Dig. 28:8, 35-37.

Davide, R.G. 1972. Nematode of Philippine crops and their control. Philipp. Phytopathol. Soc. Bull. 2, 34 p.

Ebuenga, M.O. 1979. The effect of neurosine on the growth of some pathogens of field legume. Unpublished BS thesis, UPLB.

Elauria, J.P. 1982. A study on the fungus apparently causing a new leaf spot on peanut. Unpublished. BS Thesis, UPLB.

Fajardo, T.G. 1934. Plant disease problems confronting track farmers in Trinidad Valley and vicinity of Baguio Mt. Province, Phil. Islands. Philipp. J. Agr. 53: 67-95.

Gutierrez, E.M. 1982. Survey and identification of seed borne fungi and viruses of field legumes. Unpublished thesis (B.S.), UPLB.

Kaindoy, G.S. 1961. Effect of population density, fertilizer levels and prevalence of block spot of peanut in the yield of peanut. B.S. thesis, UPLB.

Madamba, C.P., J.R. Deanon Jr., G.B. Bantoc, Jr. and C.G. Goseco. 1966. Yield responses of some vegetables and field crops to soil fumigation for the control of plant parasitic nematodes. Philipp. Phytopathol. 2:12-12 (Abstr.).

Opina, O.S. 1983. Epidemiological analysis of peanut rust. Philipp. Phytopathol (In Press).

Opina, O.S. 1984. Fungicide and their frequency of application for the control of peanut rust.

Paningbata, R.A. and L.L. Ilag. 1984. Resistance of peanut cultivars to Cercosporidium personatum (Berk. and Ant.) Desighton Phil. Agric. UP Los Baños 67(1):17-24.

Paningbatan, R.A. and L.L. Ilag. 1981. Two leafspots of peanut in the Philippines. Etiology and host response to infection. 64(4): 351-364.

Peanut Research. State of the Art. PCARRD Crop Series 1983. Crop Protection Management Crops and Needs p. 25.

Quebral, F.C. 1970. Field legume diseases. UPCA Ext. Educ. Plant Dis. Rept. 10.

Quebral, F.C. and D.A. Benigno. 1975. Some diseases of mungo, peanut and soybean. Agr. Los Baños 14: 1-12, 14,17.

Quebral, F.C., E. Zehr and J.R. Deanon, Jr. 1970. Bacterial wilt of solanaceous plants. UPCA Ext. Educ. Plant Dis. Rept. 4.

Quebral, F.C., O.A. Garcia, F.I. Punzalan and I.C. Cagampang. 1976. Evaluation of fungicide for leaf rust and leaf spot control of peanut. Phil. Agric. 59: 313-318.

Quebral, F.C. 1978. Supporting the field legumes. Prod. Program through disease control. UP Prof. Lect. in Plant Path. UPLB, College, Laguna.

Quimio, A.J. 1974. Bacterial diseases of plant in the Philippines. NRCP Res. Bull. 29: 80-90.

Ramos, J.C. 1926. Pytium damping-off of seedlings. Philipp. Agr. 15:85-98.

Ramos, E.B. 1966. Pear culture in Baguio. Philipp. J. Plant Ind. 31: 231-247.

Reymundo, S.A. and D.B. Lapis. 1962. Control block spot of peanuts. Agr. Los Baños 2:2.

Reinking, O.A. 1918. Philippine economic plant diseases. Philipp. J. Sci. 13: 165-216.

Reinking, O.A. 1919. Philippine plant diseases. Phytopath 01.9: 115-140.

Reyes, G.M. 1937. Sclerotium wilt of peanut with special reference to varietal resistance. Philipp. J. Agric. 8:245-287.

Reyes, G.M. 1938. Relative response of peanut varieties to artificial infection with Sclerotium rolfsii Sacc. National Res. Counc. Philipp. Bull. 19: 149-150 (Abstr.).

Reyes, G.M. and M.M. Ramos. 1935. Sclerotium wilt of peanut with special reference to varietal resistance. Plant Ind. Dig. 1: 3-8.

Reyes, G.M. and R. Romasanta. 1940. Varietal susceptibility of peanuts to block spot. to block spot (Cercospora personata (B and C) Ell. and EV). Philipp. J. Agr. 11: 371-381.

180

Roldan, E.F. and A.F. Querijero. 1939. Block spot of peanut. Philipp. Agr. 27: 669-682.

Tabaniera, P.V. 1961. Effects of four fungicides on black spot of peanuts. BS Thesis, UPLB.

Tapay, R.O. 1976. Studies on the mottle disease of peanut. Unpublished BS thesis, UPLB.

Tan, A.S. 1965. Farm tips from Los Baños. Black-spot of peanuts. Agr. Ind. Life 27: 20, 48.

Vichanco, L.N. 1959. Philippine Agriculture. 2nd ed. Coll. Agr. Univ. Philipp. 920 p.

Zamboanga del Sur. Technoguide for mungbean and peanut crop protection section. pp. 25-30.

Zehr, E.I. 1970. Strains of Pseudomonas solanaearum in the Philip. as determined by cross-inoculatin of host at different temperature Philipp. Pytopath. 6:44-54.

B. Weeds

Fabro, L.E. and R.P. Robles. 1982 Economics of promising weed control methods in mungbean and peanut. Weed Science Report. pp. 44-50.

Paller, E.P. 1985. New herbicides for selective post emergence control of grass weeds on peanut. (Unfunded, Unpublished research). Conducted at Dr. Vega's place, October-December 1984.

Punzalan, F.L. 1972. Field screening of herbicides for weed control in corn. Intercropped with peanut. Weed Science Report. pp. 87-90.

Punzalan, F.L. and R. Vega. 1972. Weed control in peanut. Evaluation of herbicides. Proceedings, 3rd Annual Scientific of the Crop Science Society of the Philippines, UPLB, Laguna. pp. 164-169.

Venagrera, E.J. and R.P. Robles. 1981. The response of peanut to different rates of diphonamide and soil moisture under levels, 12th annual proceedings, PCCP, May 13-16, UPLB? College, Laguna. p. 105.

C. Insects

Cadapan, E.P. 1983. Management of peanut Insect Pests. Progress Report. Peanut CRSP. UPLB, College, Laguna.

Cadapan, E.P. 1984. Management of Peanut Insect Pests. Annual Report. Peanut CRSP, UPLB, College, Laguna.

Cadapan, E.P. 1984a. Management of Peanut Insect Pests. Progress Report. Peanut CRSP, UPLB, College, Laguna.

Castillo, P.S. and A.P. Mejico. 1981. Steps in growing peanut. Mimeo paper. Institute of Plant Breeding, UPLB. 6 pp.

De Jesus, L.R. 1982. The effects of the recommended varieties of peanuts on the biology of the spider mite, Tetranychus kanzawai Kishida. Unpublished BS thesis, UPLB.

Josue, Ma. L.C. 1984. Frequency and fluctuation of pollinators in peanut and mungbean fields applied with different levels of chemical treatments. Unpublished BS thesis, UPLB.

Pascual, I.P. 1958. Soil and seed treatments with aldrin and chlordane for the control of insects affecting peanut. Unpublished BS thesis, UPLB.

Sanchez, F.F. and G.F. Rosales. 1970. Screening insecticides for the control of pests of peanuts. Annual Report. Upland Crops Program, Dept. of Agronomy, UPLB.

Villaflores, M.F. 1958. Seed and soil treatments for the control of soil insects affecting peanuts. Unpublished BS tehsis, UPLB.

102

UTILIZATION OF PEANUT AS FOOD IN THE PHILIPPINES[1]

Elias E. Escueta[2]

Introduction

Peanut has many combined advantages as a food and food ingredient. Among these advantages are: pleasing aroma and flavor; crunchy texture; high energy value; high protein, minerals and vitamins, such as thiamine and niacin. It is also suitable for processing into hundreds of food products and food ingredient.

Edible peanut products covers a wide range including the more common products like, in-shell peanuts, shelled peanuts, roasted peanuts, salted peanuts, peanut butter, candies and peanut confectionery; and other products like peanut flour, protein isolate, cheese, "milk", shortening, seasoning and extruded snack foods.

---

[1] Paper presented during the "First National Peanut Consultation and Peanut-CRSP Review" held at PCARRD, Los Baños, Philippines on February 7-8, 1985.

[2] Assistant Professor of Food Science & Technology, Institute of Food Science & Technology, U.P. Los Baños, College, Laguna, Philippines.

Peanut flour is an excellent supplement to wheat flour and in low-carbohydrate diets. It contains four times as much protein, eight times as much fat and nine times as much minerals as wheat flour. Peanut protein isolate can be used for fortification of bakery products, milk substitute, infant foods, simulated meat products and other nutritional foods.

Peanut is one of our important and nutritious food crops. It can be an important source of protein, minerals and vitamins in the Filipino diet. It is fitting therefore, that available information as well as needs for the utilization of peanuts as food be carefully assessed at this point in time.

Status of Research on Processing and Utilization of Peanuts as Foods

At present, there are not significant research activities on the processing and utilization of peanuts as food in the country. This is not due to lack of interest and capability among researchers on this field, but rather due to low priority accorded this kind of work as a matter of policy formulation by research coordinating and funding agencies. This being true and rightly so, because production always

gets the highest priority and financial support. This situation is easily understood if viewed against the very small area, volume of production and yield of peanuts in the Philippines today (Table 1 & 2). Furthermore, the per capita consumption of peanut as food is very low. It is only 0.5 to 0.7 kg per year.

The importance of the work on the utilization of peanuts as food, however, is shown by the fact that of the total available peanuts in the country, about 66% is consumed as food, with feeds and seeds sharing only 26% and 8% respectively.

Traditional Peanut Food Products

Peanuts are boiled or roasted in shell and consumed as a nut. Larger amounts are shelled and the kernels are roasted or fried in oil with or without the seed coat. Salt and garlic are almost always added for extra flavor. A good portion of the nuts available are used in the preparation of peanut butter and in various types of candy bars, brittles and confections. Data on the amount of peanuts used in these products, however, is not readily available because, aside from peanut butter, most of these products are

produced by household and village-scale processors.

Escueta (1980) studied the sorption isotherms of dehydrated and candied fruits and nuts, and found out that among the six peanut products surveyed, 5 were dried to moisture levels much lower than the safe and desirable water content for optimum texture and acceptability. On the other hand, one peanut product was at a moisture content higher than the critical point that microbial spoilage soon occurred. Quality and shelf-life of these products can be optimized if their sorption isotherms are generated and utilized as guides for proper processing, packaging and storage.

Del Rosario and Sabiniano (1980) reported to have improved the quality and acceptability of six traditional peanut products, as well as made the cost cheaper by modifying the formulations.

Aflatoxin in Peanuts

Fungal contamination is undoubtedly by far the most serious type of contamination in peanuts, the most important effect bring the production of a series of highly toxic substances, generally called aflatoxins, by the fungi *Aspergillus flavus* Link and Fries, and

106

Aspergillus parasiticus Speare.

Mention must be made of the four aflatoxins (Labarthe, 1975) classified into two groups according to the number of carbon atoms and the presence or absence of lactones on the last core (nucleus):

- Aflatoxin B1 and B2 : 5 carbon atoms
- Aflatoxin G1 and G2 : 6 carbon atoms + 1 lactone

Aflatoxins act on the cells, reducing mitosis and slowing down protein synthesis by inhibiting the metabolic process. In human system, liver damage is the most noticeable effect. Among the animal species, birds are the most sensitive to this toxin, and monogastric mammals rather less so. Adult polygastric mammals do not appear to be subject to this type of intoxication but this type of intoxication but they become vectors of aflatoxin through the contaminated milk (Lafont, 1974).

In view of the frequency with which Aspergillus is found in peanuts and of the toxicity of aflatoxin this problem must be given special attention here in the Philippines (Table 3 & 4). Unfortunately, very little work has been done on aflatoxin in peanuts much less in peanut food products. Work on aflatoxin

in the country has been done instead in other crops such as mungbean (Perez, 1977) and corn (Celino, 1980). Santamaria, et al. (1972) and Pandialan (1972) are some of the few researchers that have included peanut in their work. Escueta and dela Cueva (1984) found that shelled peanuts can be stored safely from contamination of Aspergillus at room temperature for 1 year if packaged in 60% CO_2 atmosphere.

Research Needs

The information available clearly indicates that the research efforts on the utilization of peanut as food is very negligible. Much remains to be done and we wish to recommend the following:

1) Improvement and development of peanut food products.

The work here should include the survey and collection of traditional peanut products for evaluation and screening based on specified criteria. The products then should be modified and improved in terms of acceptability, nutritional value and shelf-life.

New products must also be developed, taking into consideration not only the technical feasibility and

nutritional quality but also the cost of the product.

2) Development of food ingredients from peanut.

The development and use of peanut products such as flour and isolates, among others, for supplementation, fortification and for the improvement of functional properties of foods should be looked into to increase the consumption of peanut.

3) Aflatoxin in peanuts and peanut products.

Aflatoxin testing services should be made available to farmers, buyers and others. Guidelines on aflatoxin levels in foods and feeds must be established. Packaging and storage systems for peanut and peanut products to prevent Aspergillus contamination must be looked into together with the effect of processing treatments/operations on the aflatoxin. Decontamination techniques to suit specific processing system is necessary to insure safe peanut products.

LITERATURE CITED

Del Rosario, R. R. and N. Sabiniano. 1980. Unpublished Research Report. UPLB.

Escueta, E. E. 1980. Unpublished Research Report. UPLB.

Escueta, E. E. and R. J. dela Cueva. 1984. Unpublished Research Report. UPLB.

Fandialan, I.M. 1972. Growth and aflatoxin production of *Aspergillus flavus* Link isolates from rough rice, corn, soybean, peanut and copra. M.S. Thesis. UPLB, College, Laguna.

Labarthe, B. Etude d'une mycotoxine, polluant de denrées alimentaires: l'aflatoxine de l'arachide. *L'alimentation et la vie*, 63, No. 1, 1975, p. 12-25.

Lafont, P. Contamination de produits oleagineux par les mycotoxines et mycotoxicoses liées á la consommation de ces produits. *Revue francaise des corps gras*, 21, No. 2, 1974, p. 77-84.

Perez, R. A. 1977. Aflatoxin production and decontamination in mungbean. M.S. Thesis. UPLB, College, Laguna.

Santamaria, P. A., A. C. Pizarro and C. R. Jackson. 1972. Aflatoxin contamination of raw agricultural crops and their by-products in the Philippines. Phil. Phytopath. 8:12-20.

Table 1. Contribution of peanut to total agriculture by area, quantity and value of production, Philippines, 1981. (Source: BAEcon)

Item	1981	Percentage
Total Agriculture		
Area (ha.)	11,960,810	100
Quantity (M.T.)	29,664,210	100
Value ('000 ₱)	42,566,394	100
Peanut		
Area (ha.)	38,700	0.30
Quantity (M.T.)	29,570	0.09
Value ('000 ₱)	129,148	0.30

Table 2. Area, production and yield of peanut, Philippines 1977-81 (Source: BAEcon)

	1977	1978	1979	1980	1981
Area ('000 ha.)	62.72	47.90	53.83	55.14	38.70
Production ('000M.T.)	46.18	37.76	49.52	49.89	29.57
Yield/ha. (M.T./ha.)	0.74	0.79	0.92	0.90	0.76

Table 3. A. flavus infection and aflatoxin content of peanut samples from Manila, Northern Luzon, Visayas and Cotabato (from Santamaria, et al., 1972).

Sample Description	No. of units plated	% of units yielding A. flavus	Aflatoxin B_1 (ppb)
1 - Freshly dug peanuts	20	5	14
2 - Farmer stock peanuts of commerce, in bulk storage, dry	20	1.4	257
3 - Shelled peanut from farmer stock	20	45	964
4 - Whole peanuts in shell	20	25	0
5 - Large segregated peanuts separated from smaller discards, used for peanut products	20	90	114

ppb - parts per billion

Table 4. Aflatoxin production of *A. flavus* isolates in cross-inoculation studies on various agricultural substrates (from Fandialan, 1972).

Original Source of culture	Substrate to which culture was inoculated	Aflatoxin content of inoculated substrate (ppb)
Rough rice	Polished rice	750 B_1
	Corn	*tr B_1
	Soybean	negative
	Peanut	8.6 B_1
	Copra	negative
Corn	Polished rice	750 B_1
	Corn	393 B_1
	Soybean	tr B_1
	Peanut	600 B_1
	Copra	300 B_1
Soybean	Polished rice	15000 B_1
	Corn	2250 B_1
	Soybean	negative
	Peanut	600 B_1
	Copra	750 B_1
Peanut	Polished rice	15000 B_1
	Corn	3000 B_1
	Soybean	negative
	Peanut	750 B_1
	Copra	1350 B_1
Copra	Polished rice	36 B_1
	Corn	36B_1
	Soybean	negative
	Peanut	negative
	Copra	tr B_1
Uninoculated Substrate	Polished rice	14 B_1
	Corn	tr B_1
	Soybean	negative
	Peanut	negative
	Copra	negative

*tr - traces

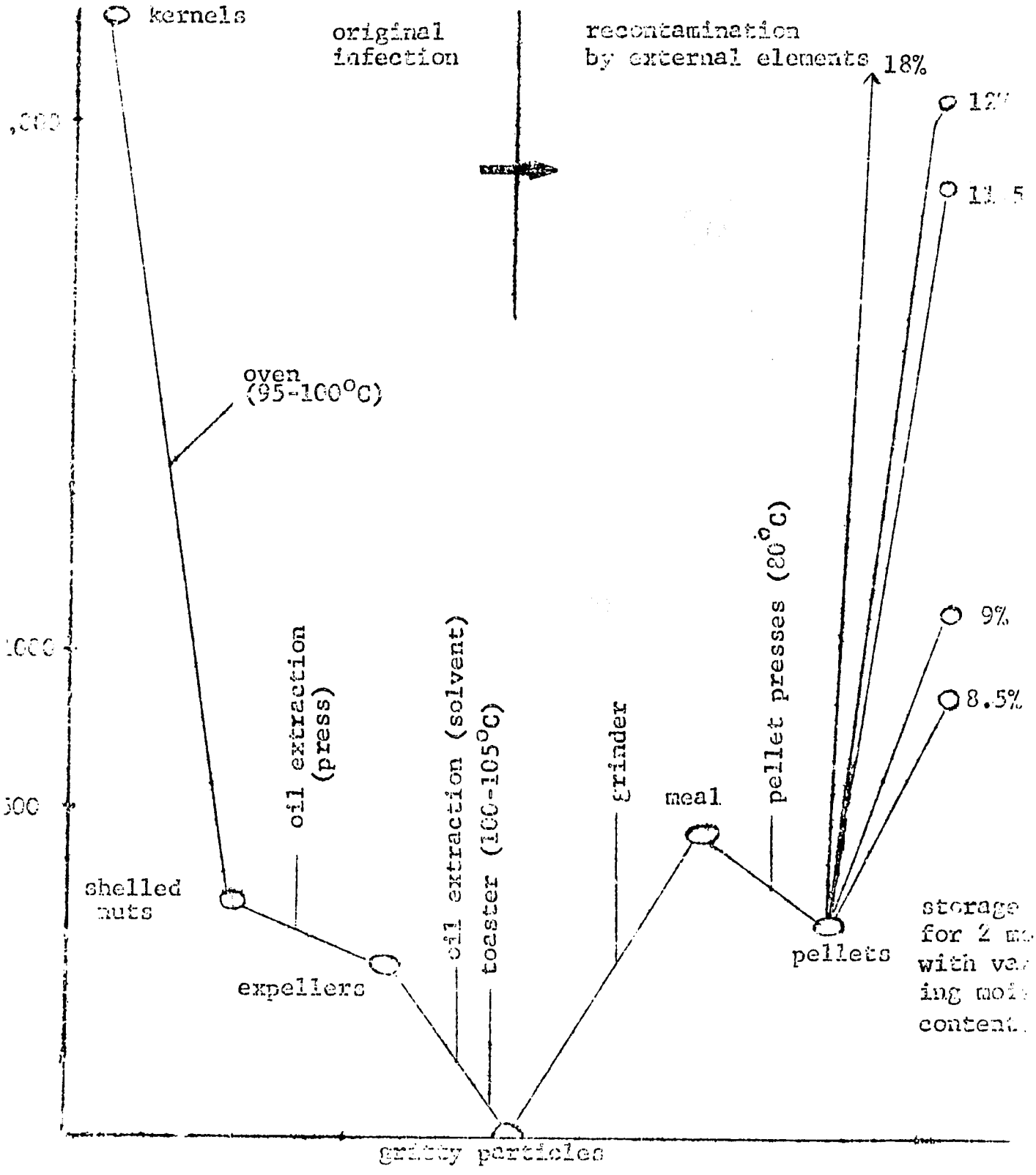

Source: Moreau, 1976 (94).

Figure 1. Evolution of the number of fungus spores in ground-nuts and cake during oil-mill processing

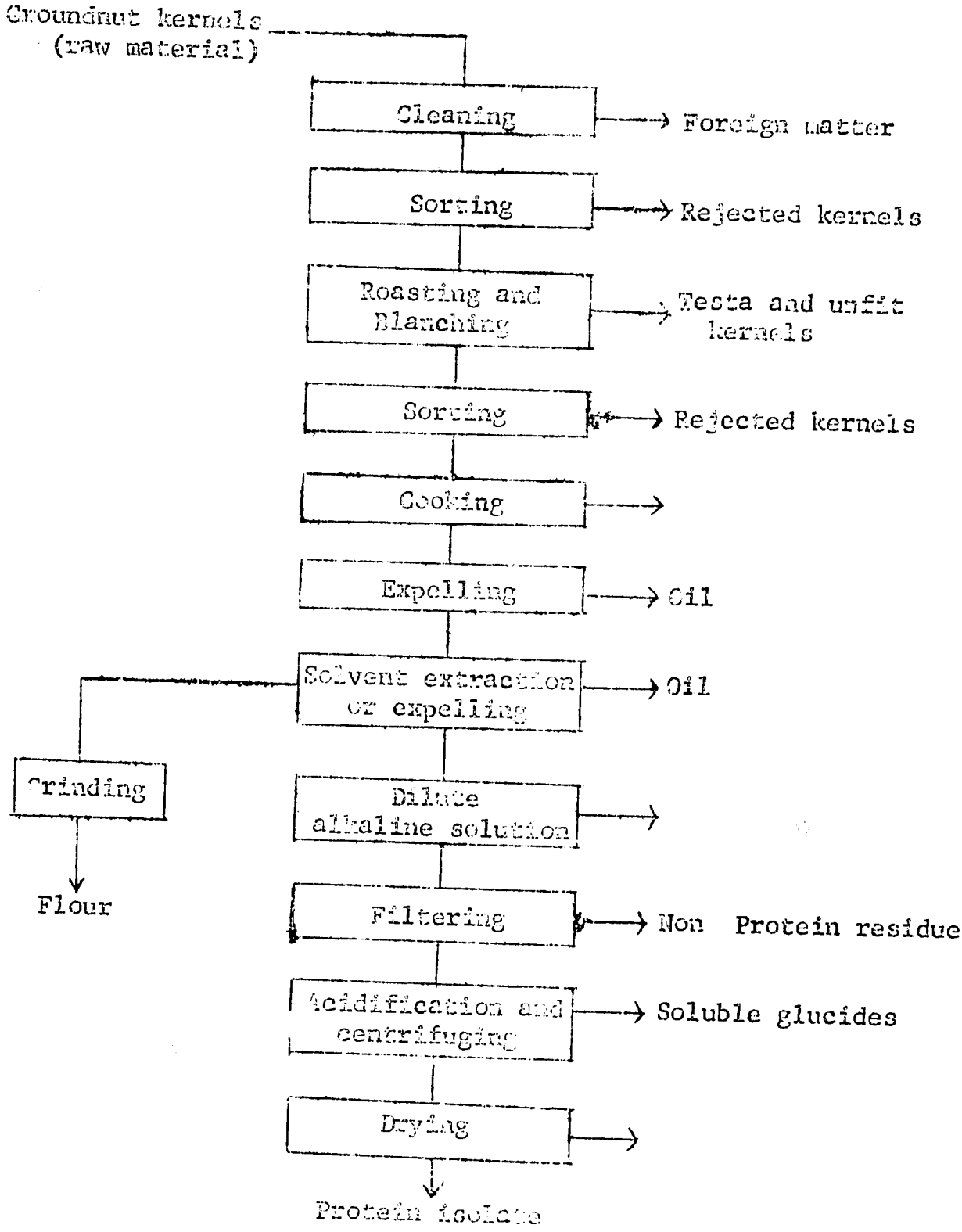

Figure 2. Production of flour and ground-nut protein isolate by traditional methods

Source: De and Cornelius, 1970

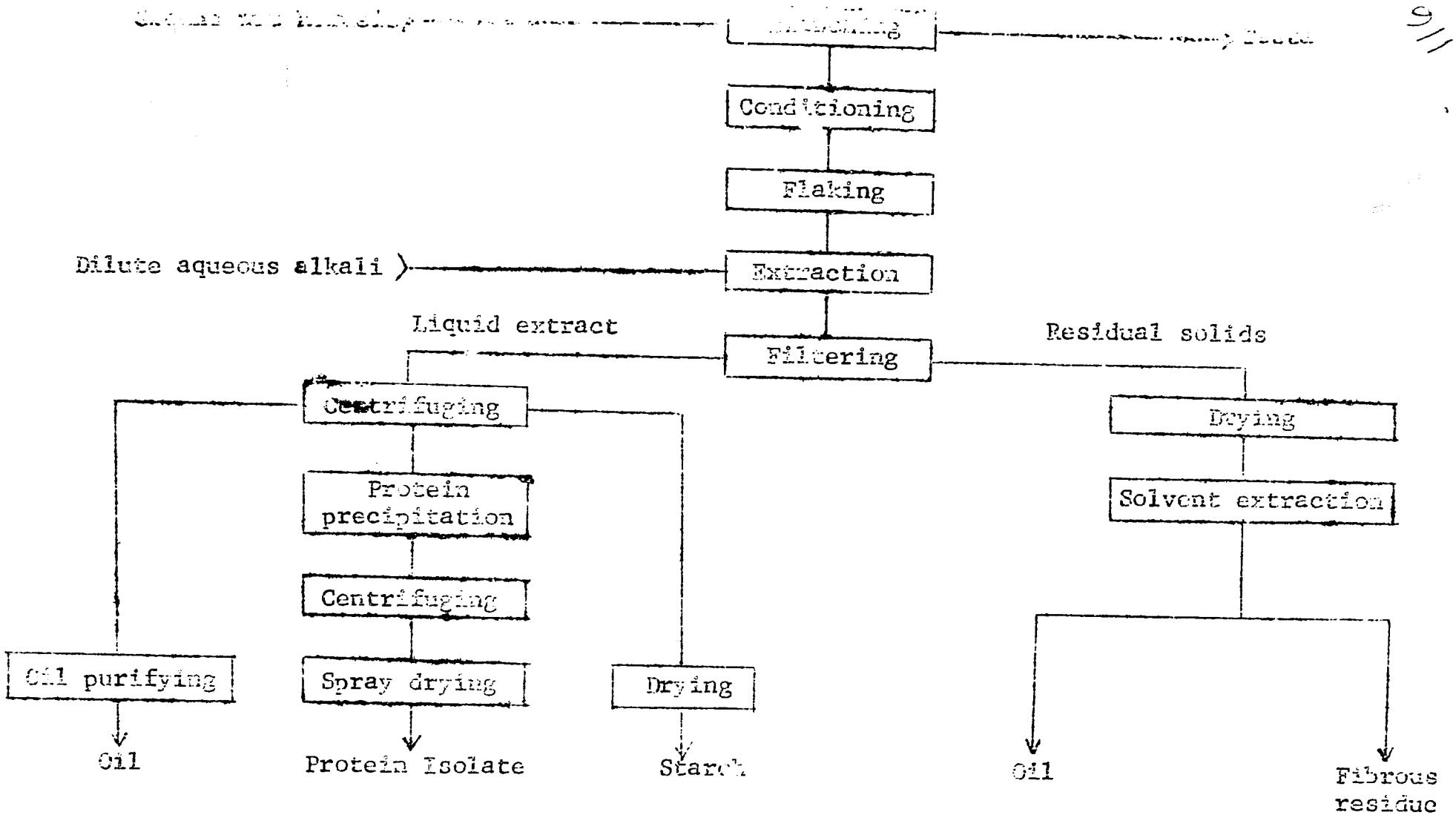

Figure 3. The CFTRI protein isolate process

Source: [illegible] and Cornelius, 1971

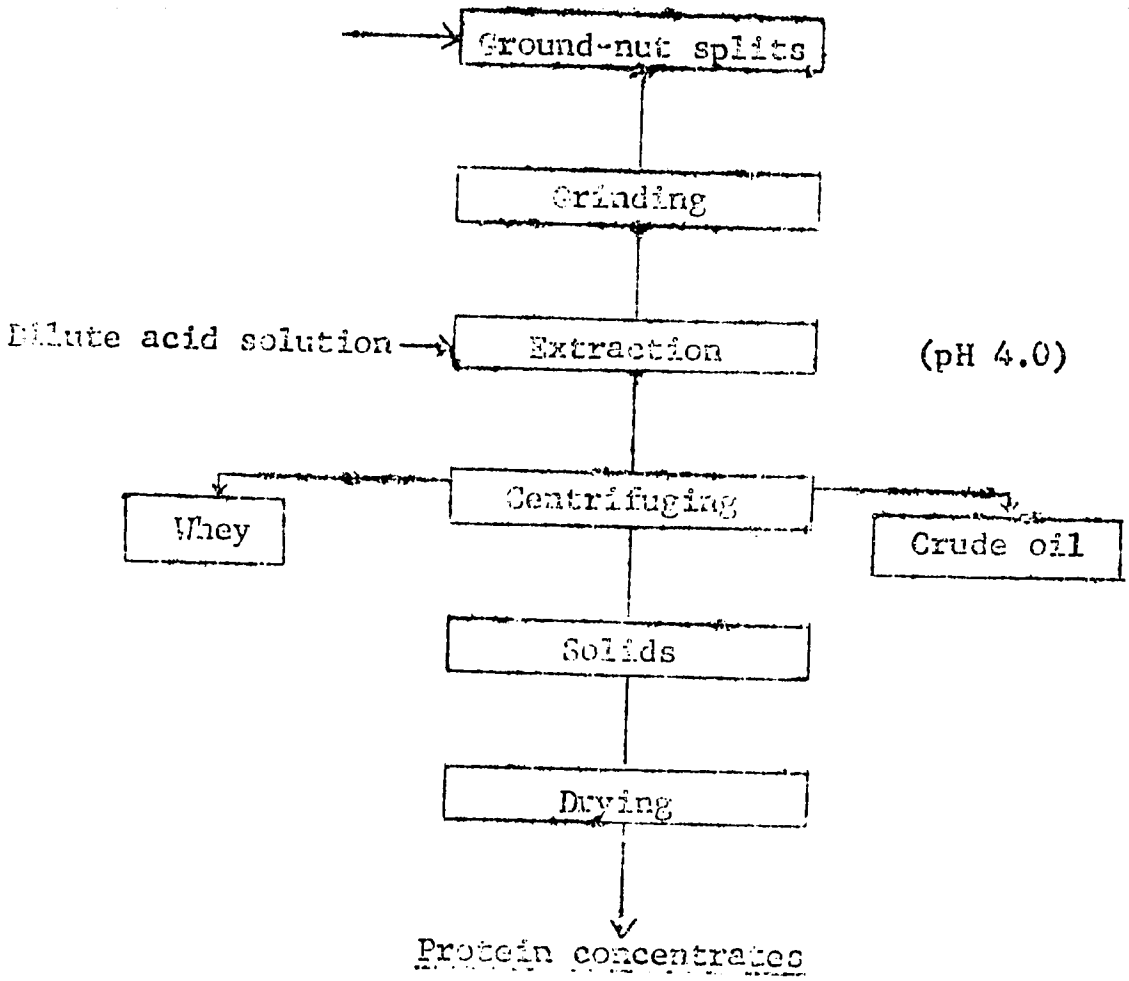

Figure 4a. Simultaneous extraction of protein and ground-nut oil for the production of concentrates.

Source: Rhee *et al.*, 1972 (115).

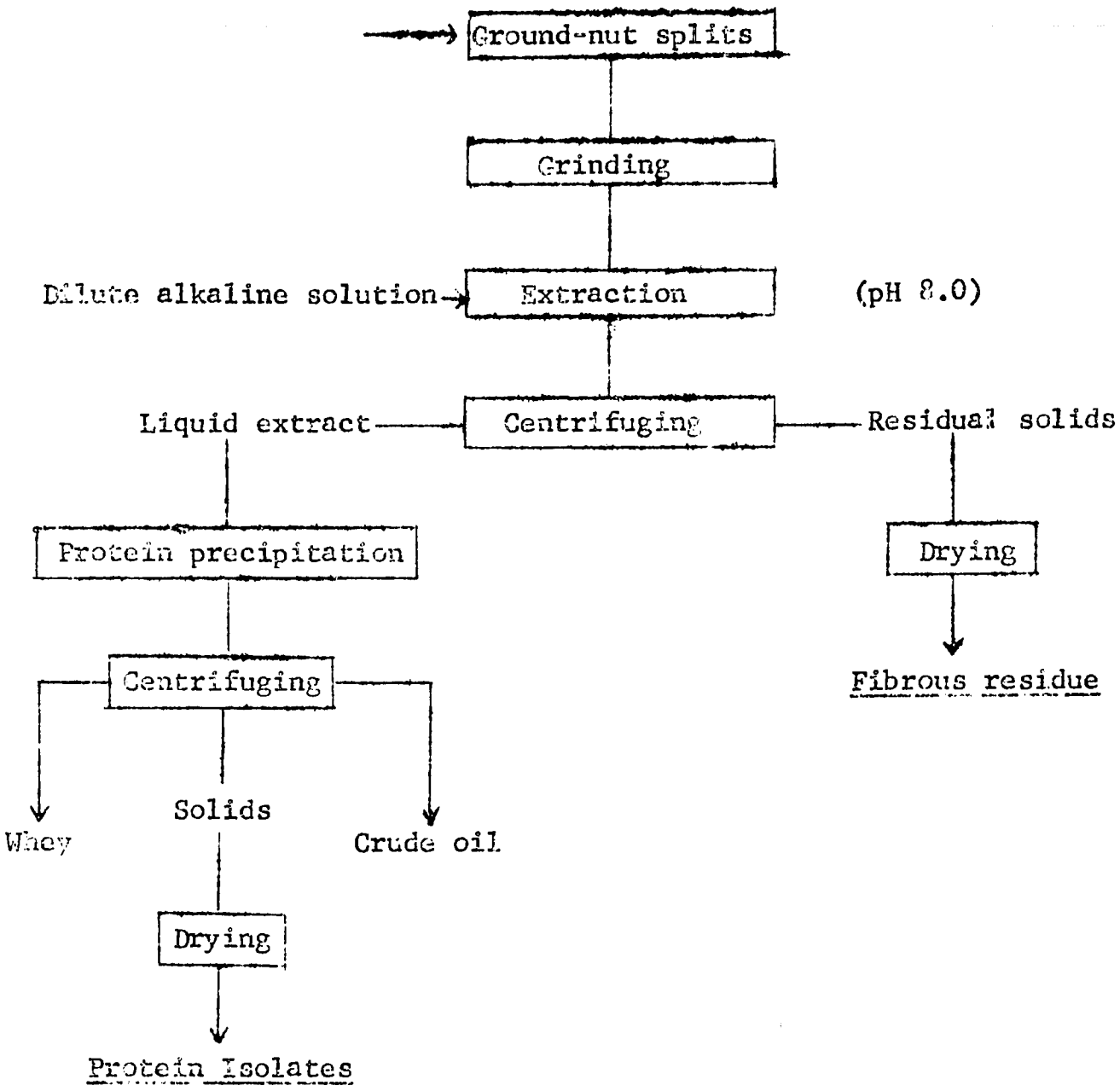

Figure 4b. Simultaneous extraction of protein and groundnut oil for the production of isolates.

Source: Rhee et al., 1972 (115)

PEANUT PRODUCTION: A FARMER'S EXPERIENCE[1/]

Mr. Manuel Cabie[2/]

When I read the invitation given by Dr. Manzano to speak on "Peanut Production Farmer's Experience", on this occasion, I readily accepted it without much ado, because it's an honor as well as an opportunity. And opportunity knocks but once, and I know that there will be no one like this anymore. But when I began pondering on what to talk about, I came to realize that I am not a leading peanut grower in our place and so I started shuddering of what to speak about. Came the rushing of the land preparation for my Farm Demonstration on rice, sponsored by the Bayer Philippines, Incorporation, and the NIA, I shrugged my shoulder over the invitation. But after sometime, I said to myself, Manuel you have committed yourself and not matter how little is the experience you've gained as a peanut grower, share them too. What is important is you shall have gained another experience so different from the experience you have in your community.

To speak before an audience of technocrats, or people whose expertise are known not only in our country but also abroad, has never been my ambition nor an obsession. Not even in my dreams. What can an ordinary farmer like me inform a group of scientists? I, who am still on the process of developing our place or finding out the best crop to be planted or the

---

1/ Paper presented in the First National Peanut Consultation and Peanut CRSP review to be held at PCARRD, Los Baños, Laguna on February 7-8, 1985.

2/ Peanut grower, Gonzaga Cagayan

119

best plants suited in the kind of soil we have, in order to realize more money and therefore to make life easier and more pleasant. It reminds me, that last year I was a soybean farmer cooperator, a pilot project of PCARRD and was implemented by CSU. Yes, I would say that the soybean plants then showed good signs of harvest only to find out that there was the 2 weeks rainshower during harvest time. This was another thrilling experience which left me indedted to the PCARRD.

Although I believe my experiences in peanut production are not worthwhile recording and documenting, allow me just the same to narrate to you some of the one hundred and one experience I have.

Before the existence of an irrigation system in our place, we used to plant several kinds of plants after harvesting our upland rice. These were the sources of our income then, the fact that our lands were not irrigated. Some farmers were planting root crops such as cassava, gabi, camote and many others. Some planted corn after the upland rice. As time went on and the farmers wanted a better way of living, they used their resourcefullness in seeking greater income as they resorted to plant peanut. I was one of them and by this venture I encountered as many problems. I cultivated half a hectare devoted to peanut, thinking that I would get a better income than rice. I planted the two seeded variety during the wet and dry season, by comparing which of these seasons would make a better yield when peanut is planted. My first trial was done during the wet season and was so discouraging. The plants were robust and tall, they bore pods but seedless. This puzzled me then, and I thought to consider the distance. However, I made the next trial, this was then the dry season. I used the same area, same variety, and same distances, that was 70 cm. between furrows

120

and 30 cm. between hills. This time plants bore pads but few had seeds. Again, I planted the same area in the next season but I lost everything due to flood because my lot was beside the river. Then I choose another area which I thought was suitable to peanut. I succeeded this time but the problem was harvesting. It was a rainy season then. I only obtained 50% of my estimated harvest because of the weather and the pods did not mature at the same time, but I was glad enough. I repeated planting the same area until such time that I obtained a reasonable harvest. Although marketing was one of my problems because our place is not accessible to market, I continued planting peanut and I've observed that the number of flowers is equal to the number of pods. However, there were pods that were undeveloped maybe because of the soil.

On one December, my father, my wife and I planted a two seeded variety. That was the end of the rainy season. The seeds germinated showing good vigor. After quite sometime my father asked my wife the question, Do you salivate while sleeping? My wife gladly answered, Yes, I do. Then she also asked, Why? My father only answered, that's why the seeds you planted have [illegible] stem. Those who salivate while sleeping have green thumbs. You may laugh at me, sneer at me but older people in our place still do believe on this. What I failed to do was to segregate the furrows planted by her so that I should have analyzed whether these were the plants that had fully developed pods. Because some pods developed one seed only. Again we expected to have a nice production but did'nt.

In any venture I have had, my wife used to raise a very big Why, if the expected income was not met. I also answered her. It's the soil. She would say, blame not the soil but the cultural management employed.

121

I observed that a seed when thrown in the soil or left in the soil even with unfavorable condition will just give what is due from it. I mean, it bears fruits just the same but not its best. Here I pose, what more if the plants receives the tender loving care or TLC, of the planter? Coupled with favorable conditions, I believe you get the desired production goal.

Lastly, to benefit the farmers because they are acclaimed as the backbone of the land, in this assembly, kindly make representations because you have more access to government authorities, be it resolved, that these farmers should have something to lean upon after they shall have retired from the hands of the plow and the carabao. Be it resolved that there shall be a price support of farm commodities because farm inputs are expensive. And I notice that only farm commodities are the only ones controlled. Be it further resolved, that other crops aside from rice and corn should be insured to help the farmers more stable. Then I believe, if these will be materialized even in the twilight years of our life, we, the farmers will also live hopefully, decently just like a government employee who weans himself from the service.

Peanut Seed Technology[1/].

Erlinda Pili-Sevilla

I. Economic Importance of Seed -

The area planted to peanut in 1982 is 56,450 hectares with a total production of 48,640 metric tons. The seeding rate is from 90-125 kilos shelled peanut per hectare with a total seed requirement of 8,467.5 to 11,760.4 metric tons of unshelled peanut, which is 17.4% to 24.2% of the total production. Registered and certified seed produced by government farms and private cooperators amounted to 71.6 tons only from 1980 to 1984, which indicates the low volume of certified seed usage in production. In 1980, about 10,730 metric tons peanut were imported to supplement local production to meet the needs of the food and manufacturing industry. Prospects for expansion of the peanut industry is apparent, however, the lack of high quality seed had been a problem in the peanut industry. To increase yield and expand area of production, to support the peanut industry, there is a need to develop on effective seed production supply system. The development of the system encompasses the field of Seed Technology, which in its broadest sense is the scientific production, quality control, processing, handling, storage and distribution of peanut seed. At such, seed technology is a multi-discipline activity.

II. Present Situation of Seed Technology -

Although peanut had been grown in the country for a long time now, a more intensified varietal improvement program did not

---

1/ Paper presented during the First National Peanut Consultation and CRSP Review Feb. 7-8, 1985. PCARRD, Los Banos, Laguna.

occur until about 1955 at the BPI, Economic Garden. In 1975, with the establishment of the Institute of Plant Breeding, the peanut breeding program of the College of Agriculture was strengthened. This situation had lead to the late entry of peanut into the seed program, however, in bridging of the protein gap and because of its importance to the economy, peanut is now given some attention. There are presently 5 varieties of peanut recommended by the Seedboard and a seed certification program for peanut. Data shows that low germination is an important factor in rejection of samples for certification. At this point in time most available information and research work had been geared to commercial production of peanut and product utilization, thus activities in seed technology is nil. This disturbing situation is further magnified with very limited number of manpower available in seed technology work for legumes.

Problems Areas and Research needs -

Peanut production is by small farmers, who does harvesting under less optimum condition including its drying and storage, which leads to rapid deterioration of seed. There are vast areas opened for research in peanut seed technology, however, the problem areas identified below are highly researchable, and to our thinking, will contribute to significant impact in the peanut production program in general and to the peanut seed program in particular. The problem areas and research need are:

A. Seed Production Technology and Cultural Management

The production of poor quality seed can be attributed in part to poor production technology. As discussed earlier,

124

information on cultural management of peanut is for commercial purposes and not for seed purposes and generally peanut growers are small farmers scattered all over. Just like other crops the requirements for seed production in term of methods of planting, population density, fertilizer including the effects of calcium, magnesium, organic matter, crop protection and water management are likely to be different to have the desired high quality for planting purposes i.e. - germination, vigor, and storage potential. There is a need to investigate the role of mineral element and micro-nutrient in seed development and maturation and also its influence on storage, vigor, and mechanical injuries. Harvesting peanut can also be a source of quality problem. There is a need to identity sources of mechanical injuries during harvesting. There is a need to develop harvesters to speed up harvesting procedures and to separate unfilled pods from filled pods. Delayed harvesting can cause quality problems due to germination in the pod or infection.

B. Seed processing -

In seed processing, on area of great concern is the drying of peanut in shells, which is the usual practice. Preliminary observation indicated that differential drying occurs between shell and kernels. There is a need to know the desired time and temperature to dry peanut in shell to maintain quality. Another area of concern is the lack of shellers to process peanuts to maintain quality. Hand shelling is a production constraint in view of its high labor

requirement which can be about 1/3 of the total production time. There is then a need to develop mechanical shellers for small farm use that would inflict minimal damage during shelling and decrease shelling time. Although seed size is varietal in nature, within varieties, seed sizes vary very much. For better quality seed there is a need to develop small seed sizers or graders to separate the different seed sizes for planting. Seed size had been reported to affect field emergence of many crops.

C. Seed Storage and Seed Preservation -

Information is available on seed storage conditions/ needs of many crops including oily seeds like peanuts. There is a need to collate all these data and verify under farm conditions its applicability. Relative to storage problems is the identification of sources and nature of loss of quality during storage. Many storage problems occur long before the seeds are stored, however, its effect are noticed only during storage, Storage losses are also observed due to pathogens and insects. There is a need to develop seed treatment methods ~~to determine~~ and control these pests. and pathogen Chemical composition of seeds is also a factor cuasing rapid deterioration of oily seeds. Like soybeans, peanut also contain unsaturated fatty acids that may cause rapid loss of viability. There is a need to study the relationship of chemical composition to loss of seed quality for planting.

D. Economics of Seed Production -

The production of high quality seed entail additional time, procedures labor and inputs in comparison with crop

126

production. There is a need to have information on data and statistics in seed production economics. It is not available presently. Prospective seed growers are in need of such information.

E. Seed Maturation Studies -

Seed germination and wrinkled seed is a common problem in peanut seed production. In this regard, crops had been found to be physiologically matured and at the peak of vigor long before they are ready for traditional harvest time. Information and data is necessary for the right time to harvest peanut to obtain maximum germination and vigor and to prevent losses due to seed germination in the field or wrinkled kernels.

F. Seed Health -

A number of seedborne fungi (13 species) had been reported by the Seed Testing Laboratories of BPI in using samples collected from 14 provinces. There is a need to assess the economic importance of these seedborne fungi in terms of its effects on germination, field emergence and establishment and ultimately to yield. Other potential problem areas are nematodes, insects and physiological disorder due to fertility problems. Also of notable interest is on seedborne virus, bacteria and nematodes.

G. Marketing and Distribution -

Constraint to production expansion is the lack of available high quality seed at certain growing areas in the right time, quantity and quality. There is a need to know

and establish marketing channels of peanut seeds.

H. Seed Testing -

Peanut as an upland crop and a directly planted commodity require vigorous seedlings for rapid, uniform field emergence and stand establishment. Field of activity is the development of methods of vigor testing of peanut for hot, too ~~hot~~ wet or too dry soil. There is a need to evaluate current available vigor testing methods for its applicability to peanut. There is a need to develop practical methods for breaking dormancy of seed under laboratory and ultimately its applicability to farm level.

I. Package of Technology for Seed Production Processing and Storage including Packaging -

With the scanty information available and the results of studies from the different institutions, there is a need to develop and package technology for production of peanut of high quality seed from production to distribution.

Efforts are being directed in solving seed quality problems in peanut but as long as there is production there will be seed quality problems that must be tackled. It is my belief that the concerted efforts in all disciplines will lead to solution of these basic quality problems in peanut but we need logistic support.

The challenge is before us - we have a group of dedicated professionals and it is with firm conviction that our efforts will bring us success.

References

(1) Bureau of Plant Industry 1971. Minimum Seed Certification Standards for Rice and Corn and other crops. Bureau of Plant Industry, Department of Agriculture and Natural Resources.

(2) Bureau of Plant Industry 1981 to 1984. Annual reports of the Seed Quality Control Services, Bureau of Plant Industry, Ministry of Agriculture, Manila.

(3) Penuela, Jose O. 1979. Development of small Farm Technology for Drying of Seeds. Unpublished Master Thesis, Graduate School, University of the Philippines, Los Baños, Laguna.

(4) Philippine Council for Agriculture and Resources Research and Development 1983. (PCARRD) State of the Art-Peanut Research. Crops Series No. 4. Philippine Council for Agriculture and Resources Research and Development, Los Baños, Laguna.

(5) Sevilla, E.P. 1982. The Advances of Seed Technology in the Philippines. Bureau of Plant Industry, Manila 261 pages.

POST PRODUCTION HANDLING OF PEANUTS[1/]

ISAGANI A. SARMIENTO[2/]

Post production handling of peanuts, a vital farm process collectively denoting harvesting, picking or threshing, curing and drying, storage, and shelling, has remained quite an underdeveloped technology in the Philippines not withstanding increasing consume demand for an up-graded quality of this protein-rich legume crop in terms of wholeness and low mycotoxin contamination[3/]

Over the years, the annual national production of peanut increased with the expansion of peanut farms and with increase in yield per hectare. In a span of a little less than thirty years, production almost tripled in magnitude from 17,500 metric tons in 1954 to 49,840 metric tons in 1980[4/]. Land area cultivated to this legume crop almost doubled from 88,500 hectares in 1954 to 163,800 hectares in 1980. Peanut yield per hectare obtained during those years were 0.621 metric tons and 0.91 metric tons, respectively. While this is so bulk post production handling of peanuts has remained as an undeveloped segment of the crop processing industry. This fact has brought about significant losses in the industry that negated efforts of increased productivity in farms. Very few studies on post production handling have been made to seriously investigate

---

[1/] Paper presented at the "First National Peanut Consultation and Peanut CRSP Review, February 7-8, 1985 PCARRD, Los Baños.

[2/] Director, Agricultural Machinery Testing and Evaluation Center (AMTEC), and Assistant Professor, College of Engineering and Agro-Industrial Technology, UPLB.

[3/] Vital informations included in this paper were contributed by Dr. Dante B. de Padua and Ms Gloria D. Picar, Executive Director and Special Assistant to the Executive Director, respectively, of the National Post-Harvest Institute for Research and Extension (NAPHIRE).

[4/] Source: Major Statistical Indicators for Philippine Agriculture, Forestry, Fishery and Mines Research, PCARRD/NSTA. 1983.

130

and up-grade the present status of the peanut industry. To-date, there is only one recorded study on peanut threshing, five studies on peanut shelling and two major researches on drying and storage. Research initiatives to study improved methods of harvesting, picking or threshing, curing and drying, storage and shelling have yet to be undertaken. This paper attempts to provide background material for analyzing research needs in the area of post production handling of peanuts.

HARVESTING

Since peanut pods are buried underneath the ground, there is no other way to harvest the crop without incurring loss but by pulling out the whole plant including roots from the soil. If the soil is hard and weedy, plants are dug up with hand tools. Otherwise, if the soil is soft as in a well cultivated sandy loam, soil plants are lifted out of the soil by hand. Sometimes, a plow is passed on both sides of row prior to hand-pulling. Because of this, therefore, harvesting peanut has become a very manual and labor intensive operation which requires about 15 to 23 man-days per hectare.

According to the Bureau of Agricultural Extension of the Ministry of Agriculture, harvesting is easily done during the dry season because of the following reasons: the pods as a rule are not detached from the vine when pulled, the soil is not compacted, and it is free from weeds which are common during the rainy season. On the other hand, harvesting the wet season crop has proven to be an expensive operation especially when it is delayed because of the rain and too wet soil.

In Isabela and Quirino provinces in the Cagayan Valley, sites of a recent survey conducted by the National Post Harvest Institute for Research and Extension (NAPHIRE), farmers plant during the dry season for cash crop, i.e., November to January and harvest in March to May. For seed material, since certified seeds are not available and neither can seeds be stored for the next planting season, peanuts are planted in June to July and harvested in September to October, considered the rainy months in the Philippines.

THRESHING

After the harvested crops is left in windrows to be aerated and sun-dried in the field, the pods are hand picked or threshed from the vine by beating. Bundles of peanut plants are repeatedly struck against a hard surface to shake the pods loose from the vines, An average of 4.6 man-days per hectare

is required for this operation. During inclement weather and the crop cannot be left on the field to dry, threshing is immediately undertaken after harvest. It is observed, however, that this practice results in the production of many shrivelled kernels when threshed pods are immediately dried.

The only recorded development work on peanut threshers was undertaken by Rosario and Bautista in 1983[5/]. In their study, performance of three identified threshers were evaluated for possible adaptation or modification. They are: 1) the Indian ground nut stripper (Fig. 1), 2) the pedal-operated rice thresher (fig. 2), and 3) the twin rotor peanut picker from North Carolina (Fig. 3). Of these three prototypes, the modified pedal rice thresher showed promising results. It attained a capacity of 66.7 kg/hr, stripping efficiency of 98%, nut damage of 8.2%, output purity of 69.6%, and 18.3% nuts with thread.

DRYING

Fresh mature peanuts have a moisture content of 50-60% (wet basis). Because of this, drying is obviously an indispensable requirement. In general, drying is done twice within the chain of post-harvest operations. If the weather permits, initial drying is done prior to threshing and final drying before shelling. Initial drying is done in the field while final drying is usually accomplished on concrete outdoor pavements of trades's and processor's warehouses.

Lengthy periods of field drying peanut exposes the crop to the dangers of mycotoxin contamination. In the Cagayan Valley, for instance, harvested crops that are left in the field to be aerated and sun-dried from 2-5 days are prone to the growth of the toxin producing mold because of the high nocturnal humidity which is prevalent in these areas.

During rainy days, when sun drying is not possible after threshing, the peanuts are spread out under the houses of farmers or traders' store houses to allow aeration; this practice, to a limited extent, minimizes heating and blackening of the crop.

[5/] Del Rosario, C. and Bautista, R. 1983. Design and development of a thresher for peanut. UNPUBLISHED.

132

Two major researches on peanut drying has been undertaken locally, viz: (1) Deep bin drying characteristics of unshelled peanuts (Bulilan, 1978) and (2) Drying and storing field legumes (Mendoza, et al, 1980).

SHELLING

Traditionally, peanut shelling is done manually. This method is time-consuming and laborious. The output is also expectedly very low. For seed purposes, care in shelling is well provided by hand shelling. However, as the demand for large volume of seeds increases, the rate and capacity of peanut shelling should likewise be increased.

In Cagayan, shelling is exclusively undertaken by traders/processors. In one shelling plant that was observed, the peanut shellers were locally designed and fabricated. They were driven by 2-20hp diesel engines. Oscillating screen trays remove some of the small and shriveled nuts prior to shelling. After shelling, another oscillating screen tray with air aspiration removes the shell. Shelling recovery was claimed to be 60-65%. The shellers are operated for about 100 days only in one year. The average capacity of local shellers are 100 bags/hr input at 25 kgs/bag.

After shelling, the peanuts are manually cleaned and sorted into rejects, broken, whole nut and unshelled nuts. This involves winnowing on a circular bamboo trays called "bilao" and hand picking the nuts. This operation is done by an army of contracted children and women workers who squat on the floor of a usually ill-ventilated warehouse. The average working hour is 10, starting at 6:00 am to 5 pm.

The increased requirements for shelled peanuts is more than adequate to encourage the development of shellers. To-date, there are only five recorded research and development studies on peanut sheller, There are: 1) VISCA Manual peanut sheller, 2) BPI roller-type sheller, 3) UPLB peanut sheller, 4) MMSU multi-purpose sheller and 5) MMSU multi-purpose sheller-cleaner. (Please see ANNEX B).

STORAGE

Peanuts are generally stored unshelled both in the farm and market levels of operation. Sack storage remains as the predominant method, but in some cases, the peanuts are stored in open concrete pits under the farm houses, where they are periodically turned using a paddle. In other cases, bamboo baskets are employed to store the produce.

133

POST PRODUCTION HANDLING PROBLEMS AND RECOMMENDATIONS*

1. Lack of good seeds for planting, resulting in low yields and mixed varieties.

   Recommendations: a) Develop proper on-farm storage systems that can preserve the viability of seeds for the next planting season.

   b) Establish seed farms to produce certified seeds.

2. Insufficient drying bringing about molding and subsequent quality deterioration and mycotoxin contamination.

   Recommendation: a) Develop on-farm low cost driers and/or alternative aeration systems.

3. Low efficiency of existing shellers and the high man-power requirements for cleaning and sorting limit productivity.

   Recommendation: a) Undertake more studies on R & D of peanut shellers.

4. Low efficiency of peanut threshers under investigation.

   Recommendation: a) Undertake more R & D.

5. No work done on harvesting technology.

   Recommendation. a) Undertake new R & D on simple, low level technology for harvesting.

---

*Based on the study conducted by NAPHIRE in Quirino and Isabela, Cagayan.

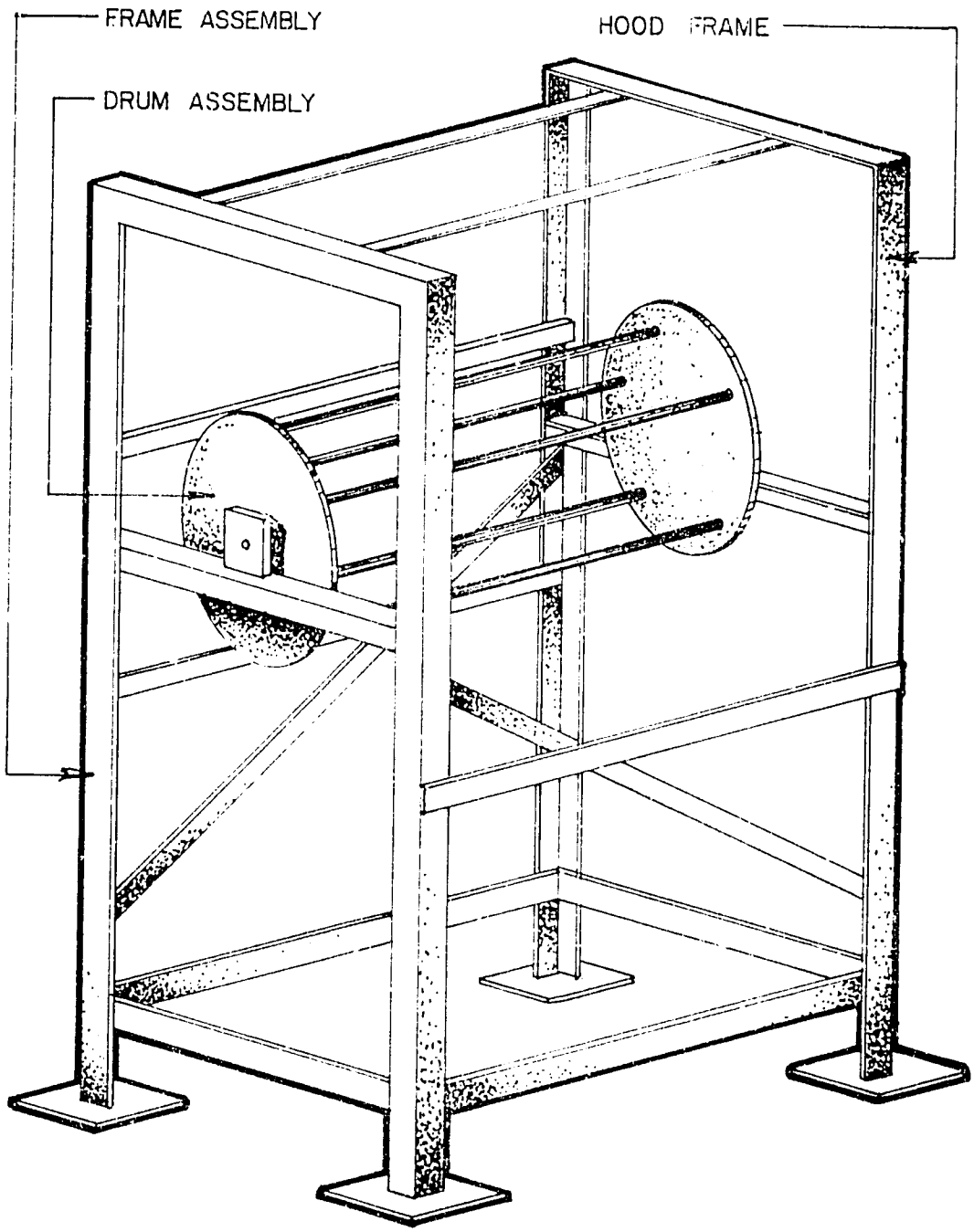

THE INDIAN GROUNDNUT STRIPPER

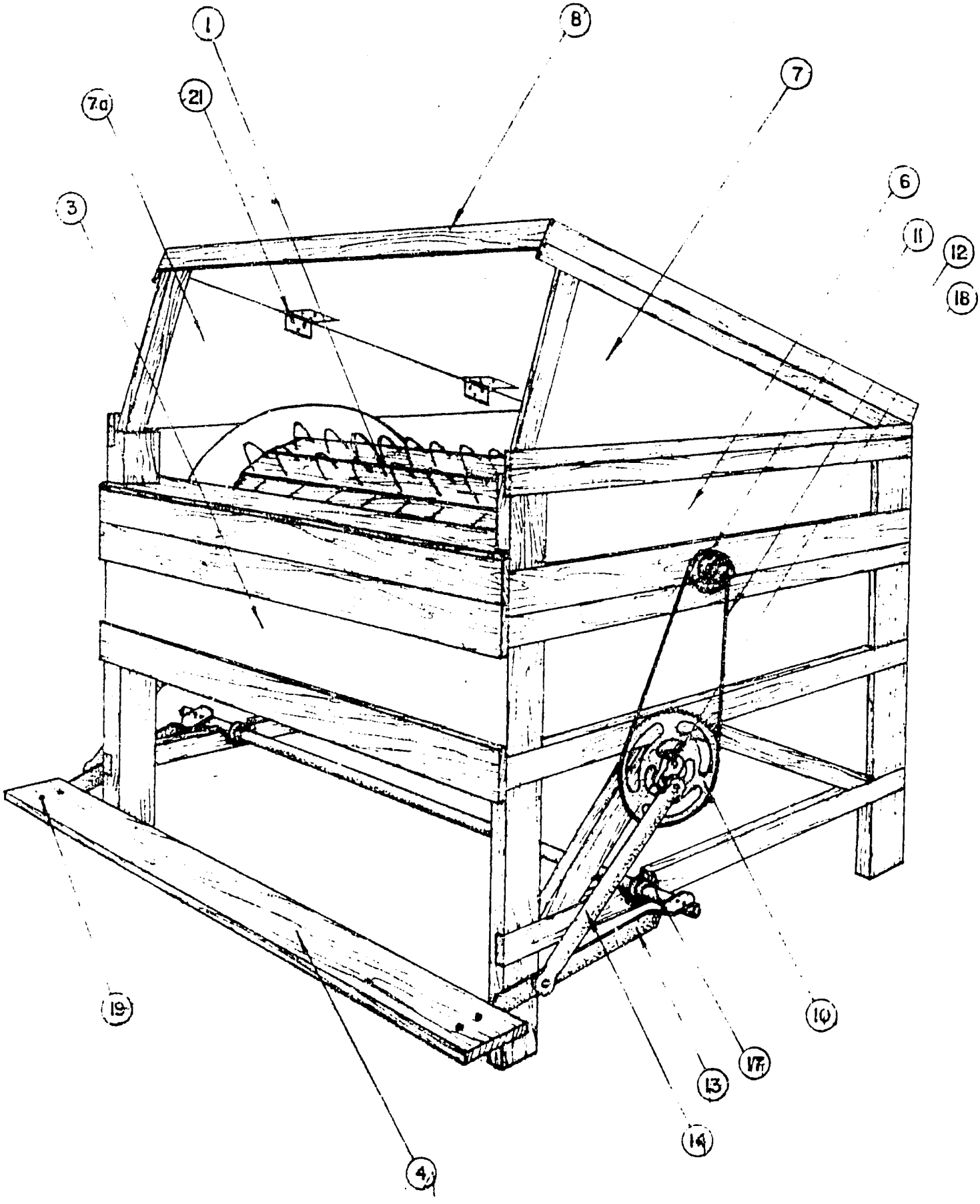

RICE PEDAL THRESHER

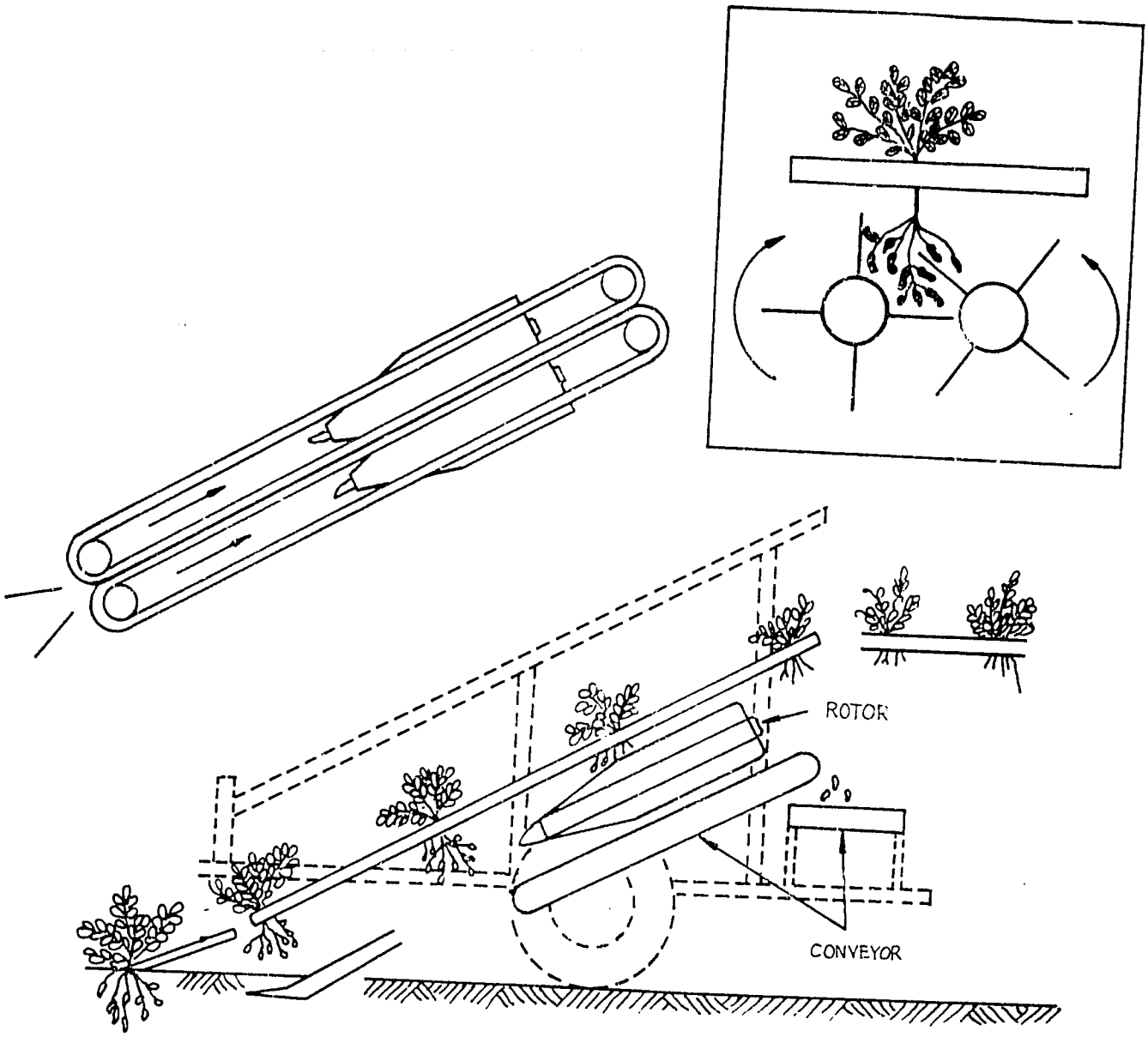

IG. 1 -- MECHANISM OF THE NORTH CAROLINA PEANUT COMBINE

ANNEX B.

1. VISCA Manual Peanut Sheller.

This hand-operated stationary roller type of sheller has a shelling capacity of 28 kg per hr. Its shelling efficiency is 96.8% while its blowing or cleaning effeciency is 92.4%. Two men are needed for turning the crank and looking and collecting shelled peanuts. Majority of the materials used in constructing the prototype is wood.

2. BPI Roller-type Peanut Sheller

The shelling capacity of this machine is estimated at 30 kg/hr. With a 3-hp electric motor providing the motive power, two men are needed for feeding and also for bagging. The shelled peanuts. Three oscillating screens are provided for cleaning and separation.

3. UPRB Peanut Sheller

A 1/4 hp electric motor or foot actuated pedal could drive this 50 kg/hr sheller. Stationary shelling bars with reciprocating slotted screen provided the shelling action. The machine weighs 70 kg. One operator can operate the unit. All sizes of 2 beam-pod varieties could be shelled. The percentage of broken nuts at various specified adjustments seldom exceeds 5%. This machine has no cleaning and separating mechanisms (Figure).

4. MMSU Multi-purpose Sheller

Stationary rollers and a reciprocating strainer provide the shelling action for this 1.28 Kg/hr, pedal-operated multi-purpose sheller. The unit, which weighs about 50 kg, can also process mungo (27.5 kg/hr) and soybeans (1[illegible] kg/hr). Two men are needed for pedalling and loading. While shelling takes place, cleaning is done by a fan which winnows away light impurities.

5. MMSU Multi-purpose Sheller-Cleaner

Two shelling rollers rotating at different speeds, an oscillating sieve and a blower comprise this multi-purpose shelling/cleaning machine. It breaks shells or pods of mungo, peanut and soybeans. Its shelling capacity varies with the product; peanut (24 kg/hr), mungo ([illegible] kg/hr), and soybeans (5.55 kg/hr). Percentages cleaning efficiency varies with peanut (83.5%), Mungo (50%), and soybeans (58%). Damage was estimated to be 5.9% for peanut, 7.1% for mungo, and 17.5% for soybeans.

The machine weighs about 50 kg. Two men are required to operate it: one to pedal and another one to load.

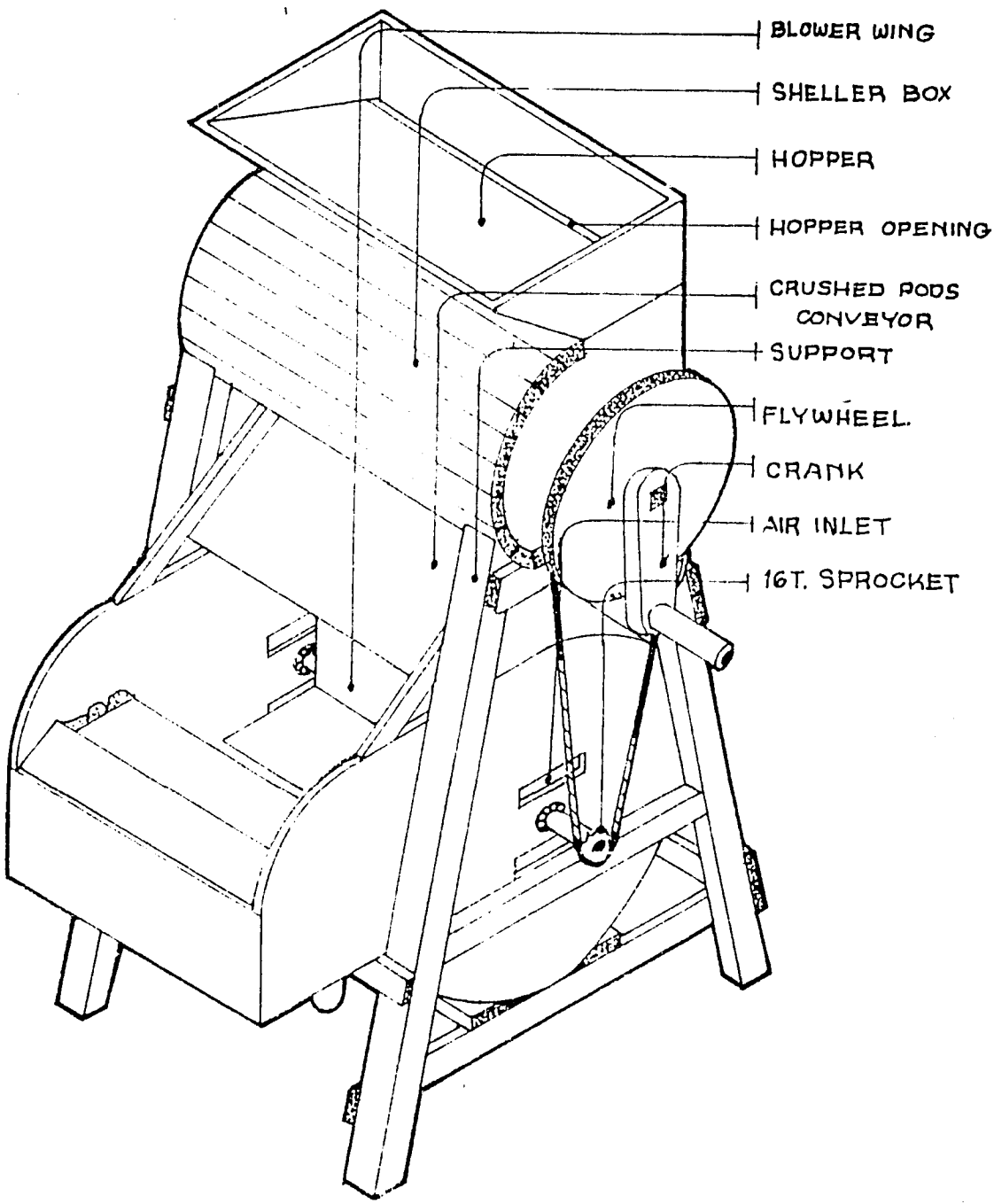

VISCA MANUAL SHELLER

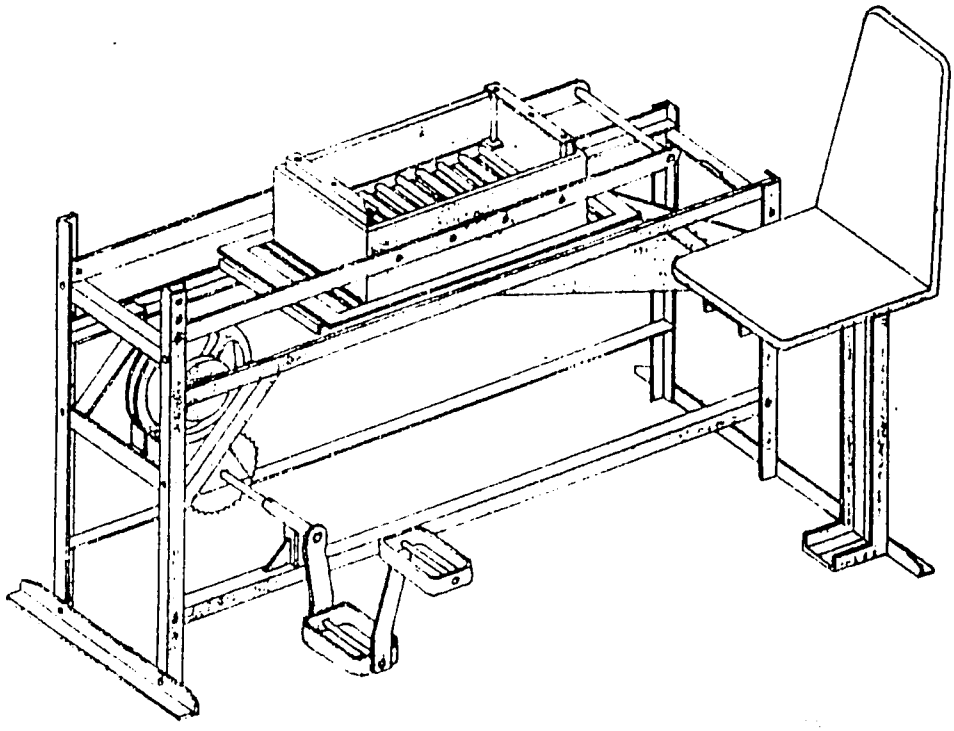

UPLB PEANUT SHELLER

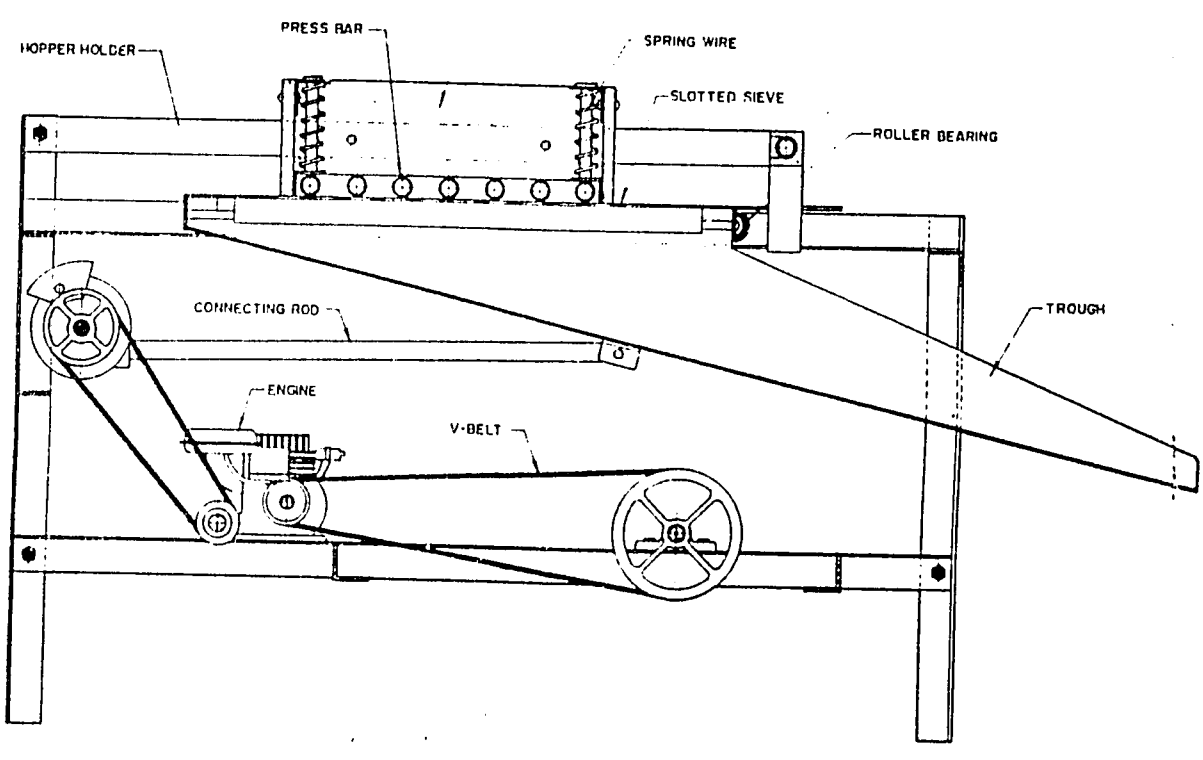

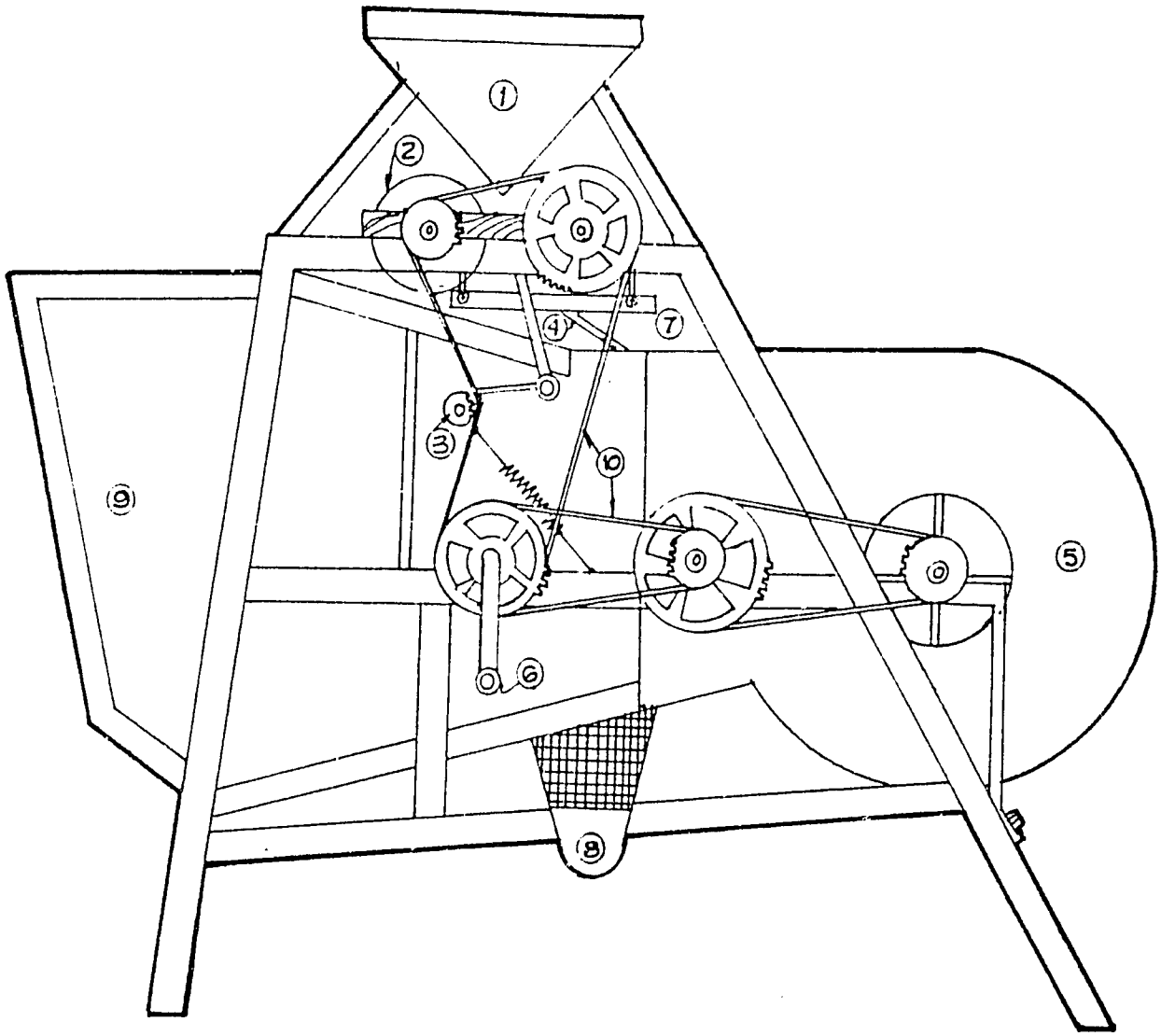

LEGEND:

1. HOPPER
2. ROLLER
3. IDLER SPROCKET
4. STRAINER PUSH ROD
5. BLOWER ASSEMBLY
6. STRAINER
7. CLEAN SEED OUTLET
8. IMPURITIES OUTLET
9. DRIVE CHAIN

MMSU MULTI-PURPOSE SHELLER CLEANER

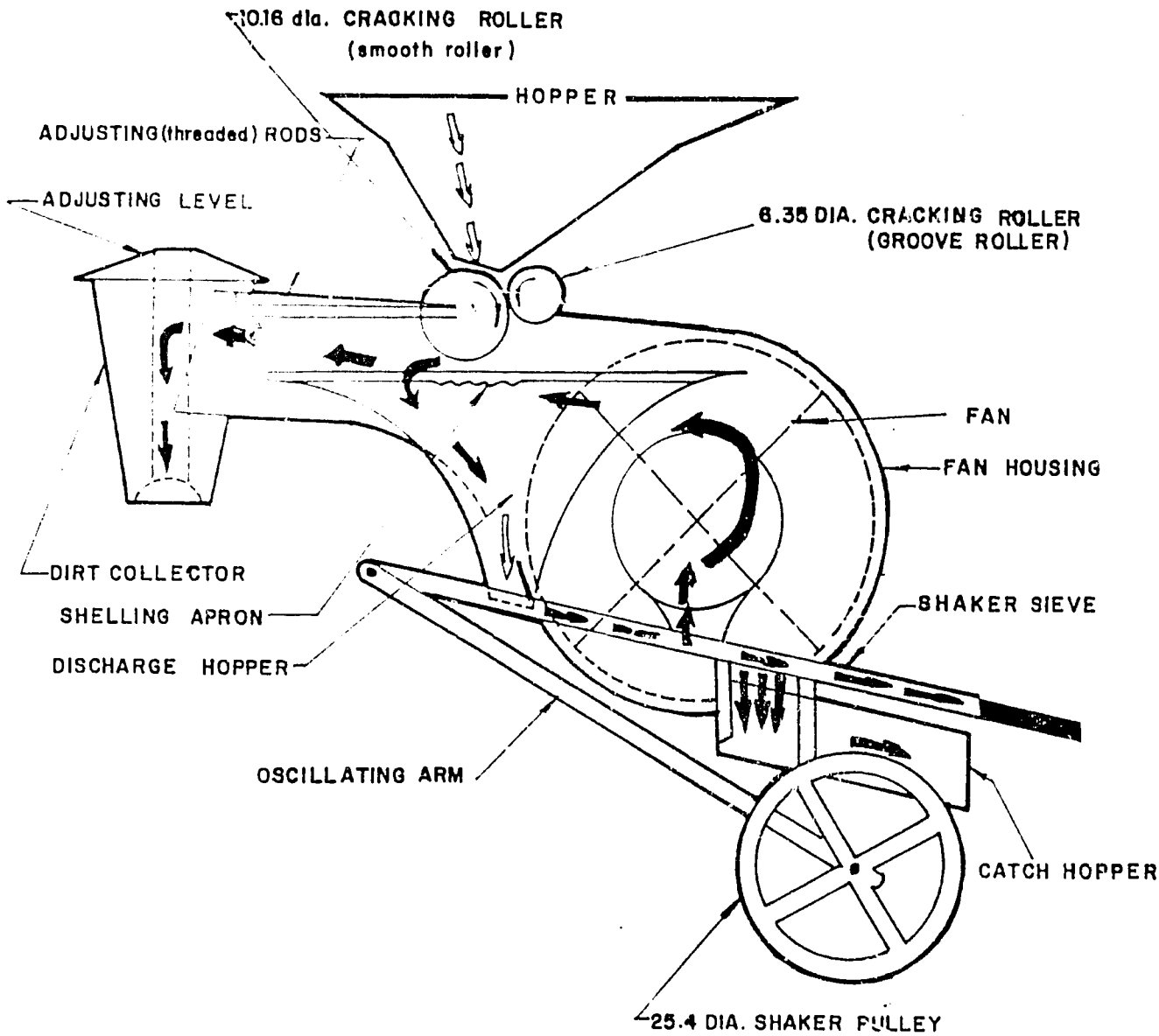

SCHEMATIC DIAGRAM OF A PEANUT SHELLER
WITH CLEANER

SOCIO-ECONOMIC ASPECTS OF PEANUT PRODUCTION IN THE PHILIPPINES[1/]

PACIENCIA C. MANUEL[2/]

Peanut, also known as goober, pindar, groundnut, and earthnut, is a high protein and high oil legume. Due to its relatively high protein content (25-30 percent) it has high nutritional value and has numerous food and industrial uses. Its high oil content (46-50 percent) makes it an excellent source of vegetable oil used in food shortening, confectionery, margarine, cooking oil, butter and peanut meal. The crude oil is used for soaps and detergents. Non-food use of the refined oil is as a base in numerous cosmetics preparation such as face creams, shaving creams and hair lotions. Peanut hay and meal are used for poultry and livestock feeds. The seed coat are commercial sources of tannin and thiamine. Some uses of peanut shell are fuel for boilers, generating the steam for electricity to operate shelling plants, filler for fertilizer, mulch for growing plant, fuel "log" and many others.

Despite the various uses and high demand for peanuts either as food, feed or industrial uses plus their adaptability in Philippine climate, the full exploitation of this crop as a commercial crop has not been fully tapped in the country.

[1/] Paper prepared for the First National Peanut Consultation and Peanut-CRSP Review, February 7-8, 1985, Los Banos, Laguna.

[2/] Assistant Professor, Dept. of Agricultural Economics, UPLB-CDEM.

The purpose of this paper then is to present the status and needs of research on the socio-economics of peanuts in the Philippines. Section 1 presents some basic facts and figures about peanut. Section 2 deals with researches done in the Philippines. Research needs of the commodity are presented at the last section.

Section 1. The Peanut Industry in the Philippines

1.1 Area, Production and Yield of Peanut.

The area production and yield of peanut from 1976 to 1983 are presented in Table 1. For the period covered, production of peanut in the Philippines showed a fluctuating trend. Production increased from 40.84 thousand metric tons in 1976 to 48.64 thousand metric tons in 1982. During 1978 and 1981, production showed a dramatic decrease, which was due to the reduction in area planted to peanuts. Likewise, the fluctuating trend can be attributed mainly to peanut being often grown only as an intercrop with other crops.

On the other hand, production of this crop increased by as much as 46 percent in 1982 from that of 1981. The upward trend could be partly attributed to the support of the government through the National Research and Development Program for Legumes launched to boost local peanut production. Technical and financial supports are extended by the programs.

The national average yield per hectare of peanuts showed an increasing trend. It increased from 0.67 M.T. per hectare in 1976 to 0.86 M.T./ha. in 1982. This is considered very low compared to other countries like Turkey with 2.35 tons per hectare, Japan, 213 tons/ha., and the United States, 2.3 tons per hectare.

The regions with high yields performance of peanuts are Ilocos, Bicol, Eastern and Western Visayas with an average yield of 1.7 m.t., 1.17 m.t., and 1.1 m.t., respectively.

1.2 Regional Trend in Production, Area and Yield.

Based on the regional distribution of production of peanuts, the top producing regions are Cagayan Valley, Ilocos, Southern Tagalog, Bicol and Central Mindanao. The major producing provinces in each region are also shown in Table 2.

1.3 Contribution of Peanut to Total Agricultural Crops

Despite the various uses of peanuts, its potential as a commercial crop has not been fully tapped. This can be supported by the insignificant contribution of peanut to the total area and production of agricultural crops in the country. As of 1982, the areas planted to peanut contributed only 0.46 percent to the total crop harvested while the demand for peanut is still high relative to local production, such that the country has to fill the gap by importations from other countries (Table 3).

1.4 Costs and Returns of Peanut Production

An estimated cost in producing peanut is shown in Table 4. It was calculated that a hectare of peanuts would require at least ₱4,038.52. Of this total cost, 42 percent was for material inputs (i.e. fertilizer, pesticides, etc.), 41 percent for labor and animal input expenses, and 17 percent for the overhead expenses. It could be noted that peanut production is both labor intensive and input using as well. Thus with the above cost outlay, small producers would find it a little difficult to go into peanut production unless

145

they are either subsidized by the government or are vertically integrated with established peanut processors.

However, if a farmer will follow the recommended use of inputs, as hectare of peanut is expected to yield an average of 1,300 kgms. Given a support price of ₱3.95/kilo, a net return of ₱1,096 can be earned by a farmer

1.5 Peanuts Projected Demand and Supply

Based on the past 10 years data on peanut production in the country (1971-1980), projections for 1985 peanut production will only be 33.47 thousand metric tons increasing to about 46 thousand metric tons in 1990. On the other hand, local demand for peanuts is projected to about 46 thousand M.T. in 1985 and increasing to 51.03 thousand M.T. in 1990 (Table 5).

1.6 Foreign Trade Aspects of Peanuts

As shown in Table 6, the volume and value of peanut exports had been erratic. In 1976, exports amounted to 6.6 M.T. and increased to 8.28 M.T. in 1981, valued at $18.21 thousand. The country had been exporting in small and fluctuating pattern to Hongkong, Japan, Singapore, U.S. and Guam in the form of peanut butter and roasted peanuts only.

Peanut products imported by the country are roasted peanuts, oil-cake, and other residues of groundnuts. The major source of imports are United States, India and Brazil.

Section 2 - Research Status on Socio-Economics of Peanut Production

Not very many studies on the socio-economics of peanut were done by the UPLB-CDEM, Special Studies Division (SSD) of the Ministry of Agriculture, the Bureau of Agricultural Economics (BAEcon). Most of the UPLB-CDEM studies were done by undergraduate thesis students who did their investigation in their home town or provinces. Another study in 1976, was done on production and marketing of peanuts in selected provinces of Luzon. Most of the studies of the BAEcon dealt on the comparative input, output and financial data for several commodities, which in some study areas include peanut (Nueva Ecija and Tarlac).

2.1 Production Aspects

A trend analysis of production, area, yield and prices of peanuts from 1948-1966 revealed that changes in the production of peanuts in the Philippines were largely due to the variation in area rather than in yield. According to that same study, 354 percent of the variation in production was due to the changes in area, while the remaining percentage was due to yield. In the regional level, fluctuations in production were the combined effect of area and yield (Gregorio, 1969).

In 1970-71, the total farm receipt per hectare of peanut in selected municipalities of Isabela amounted to ₱1,247. The cost of production was ₱712 leaving a net return per hectare of ₱635. The most dominant problems reported were occurrence of pest and diseases, rotting of pods before harvesting peanuts.

In a study in Nueva Ecija, peanut farm had a gross income of ₱1,171 per farm or ₱1,316 per hectare. Total expenses amounted to ₱1,266 per farm or ₱1,422 per hectare. This study reported a net loss of ₱95 per farm and ₱106 per hectare. Major problems encountered in production were lack of capital, unavailability of seeds, and high cost of irrigation. No marketing problem were reported (Sayaboc, et. al., 1976).

In that same year, another study estimated the cost and returns in peanut production in Luzon. Although total costs of production varied by province, but for all farms included in the study, it averaged to ₱1,660 per hectare. With an estimated return of ₱2,728 per hectare, net returns from peanut amounted to ₱1,068 per hectare or ₱1.17 per kilo (Huelgas, et. al.).

In Bohol, average peanut farm was 0.44 hectare. It grossed ₱1,751 per hectare. With an average production cost per hectare amounting to ₱1,528, it only realized a net returns of ₱223 per hectare. It was found that only 10 percent of the farmer respondents applied fertilizer and chemicals. The most common problems met by the peanut farmers were low volume and high cost of production, and low prices for the product (Lizaroldo, et. al., 1982).

While in Antique, the average peanut farm was 0.62 hectare. It had a total production cost of ₱1,324 per hectare. With a production of only 235 kg. (unshelled peanut) per hectare and a value of ₱1,024, a net loss of ₱299 per hectare was incurred. This could be due to very low productivity of peanut in this province. Another reason for such a loss was associated to the complaint of 27% of the farmer respondent that soil and weather condition in the area

148

studied were not suitable for this crop. Another 31% of the respondents mentioned lack of capital to support their farm operations while 48% voiced out the need for technical assistance such as provision of information about new farming technologies for peanuts (Lizarondo, et. al, 1982).

A study in Zamboanga del Sur revealed that the average cost of production for peanuts vary by size of farm. Cost of production averaged ₱340 per hectare while gross returns averaged ₱1,106 per hectare. By farm size, farms of less than 0.5 hectares obtained the biggest return of ₱1,645 per hectare; farms of 0.5 to 1.0 hectare recorded ₱807 per hectare, while farms bigger than 1.0 hectare realized ₱525 per hectare (Lizarondo, et. al., 1981).

2.2 Domestic Marketing Practices for Peanuts

In general, the marketing of peanuts involves a number of intermediaries from the producer farms to the final consumer. The farmers usually sell the bulk of their produce and keep some of these either for home consumption or for seed purposes. For the marketable surplus, the product passes through a series of channels such as agents, consumers, assembler-wholesalers, retailer and wholesaler-retailers, processors and finally the consumers. With regards to processors, some of their needed products are supplied by the agent, wholesaler and/or assembler-wholesaler.

The longest route observed for peanut marketing in Luzon was from the farmer to the wholesaler to the assembler-wholesaler to the miller wholesaler, then to the retailer and finally to the consumers. Peanut from processors reached the consumers in several

49

processed forms like peanut butter, peanut brittle, crunch peanut, fried or roasted forms like peanut butter, peanut brittle, crunchy peanut, fried or roasted peanuts sweetened peanuts. Retailers usually sell already cooked peanuts - boiled or roasted.

2.3 Production, Marketing/Distribution Problems in Peanuts

At the farm level, the major production problems encountered by farmers were as follows: (1) unfavorable weather (2) lack of capital to purchase inputs (3) high prices of inputs (4) pest and diseases (5) lack of knowledge about the package of technology for legumes (6) lack of reliable source of seeds for planting.

With regards the marketing and distribution aspects, the major problems encountered by farmers as well as middlemen are related to (1) poor infrastructural facilities, (2) wide fluctuations of prices, and (3) regional concentration of the processing plant, majority of which are located in Metro Manila.

2.4 Price Trends of Peanuts

2.4.1 Wholesale Price of Unshelled Peanuts and Shelled Peanuts

Generally, from 1976 - 1982, the wholesale price of unshelled peanuts exhibited an increasing trend. In 1976, the price per ganta of peanuts was ₱3.36 or ₱1.53 per kilo and increased to ₱10.90 per ganta in 1982.

On a monthly basis, the highest price of unshelled peanuts in the country was in October and lowest during the month of April (Table 7).

Shelled peanuts command higher prices due to the milling cost and additional labor cost incurred. In 1976 the wholesale price was ₱11.50 per ganta or ₱5.27 per kilo and increase to ₱19.72 per ganta in 1982.

150

Average monthly wholesale prices of shelled peanuts were lowest during the month of January and highest in November, covering for the period 1976 - 1982.

2.4.2 Retail Prices of Shelled Peanuts

Average retail prices of shelled peanuts fluctuates from year to year. In 1976 the price per ganta was ₱10.37 or ₱4.71 per kilo and increase to ₱13.40 per ganta in 1982 (Table 8).

The highest retail prices for shelled peanuts was highest in Cagayan Valley, at ₱19.78 per ganta and lowest at Western Mindanao at ₱8.12 per ganta.

Section 3 - Gaps and/or Needs for Socio-Economic Research on Peanuts

Since the production of peanuts in the country is still in its developing stage, the domestic supply of peanut are still insufficient for the present demand. Thus importation is always related to supplement domestic production of peanuts. This would mean a large dollar drain on the country's foreign exchange earnings.

With the objective of promoting domestic production for peanuts to meet increasing domestic requirements, proper technology is necessary to achieve increased level of production. Efforts of development should include not only specific regions that are suitable to production of this crop. Also technical assistance on improved and scientific cultural practices are needed. High yielding varieties that are developed should be disseminated effectively to the farm level. Socio-economic evaluation of the different technology generated for peanuts (i.e., fertilization requirement, pest and diseases control etc.) should be done. With the appropriate technology and assistance to the producers, the country

could therefore increase domestic production, thus reducing or totally eliminating importation, and hopefully targeting available quantity for export of this crop.

At this stage of peanut production in the country it is recognized that the priority is still on the development and packaging of technology. However in agricultural production, the acceptability and adoption of a technology or technology package does not necessarily depend only on producing the highest yield but on whether it gives the highest net returns. In fact profitability is the measure, that farmers themselves consider what they adopt new innovations in agricultural production. Furthermore, researchers have to consider whether the farmers can afford or are willing to invest to follow the requirement of the recommended technology. Socio-economic evaluation in addition to agro-climatic evaluation are needed before making the final recommendation to the farmers.

Identified Research Needs:

A. Socio-economics of Peanut Production

1. Resource Productivity Studies

a) Costs and returns at different kinds and levels of input application - high technology vs. low technology level for fertilizers, chemicals.

b) Economic evaluation of traditional practices vs. recommended practices. ex. seeds vs. use of inoculants.

2. Technology Transfer

a) Socio-economic constraints to peanut production using package of technology.

3. Decision Making Studies

   a) Socio-economic factors affecting decision in adopting or producing peanuts

4. Socio-economic evaluation of package of technology

   a) economic evaluation of production under low, medium and high levels of technology

5. Production potentials given existing resources

B. Assessment, Evaluation and Development of Marketing System for Peanuts

a) Product and Input Markets

   1) Market structure, conduct and performance for both output and input market.

   2) Market development and strategies for output by scale of operation.

   3) Consumer preference studies - grades, color, taste and texture of product.

   4) Availability of inputs and its prices, e.g. seeds, fertilizers, etc.

b) Price relationship for both product and inputs

   1) Pricing Policies - government intervention

      a) Impact of price support programs to domestic production

      b) Impact of input subsidy programs on domestic production

   2) Spatial, temporal price relationships for product

c) International Trade

   1. Terms of trade for peanuts

   2. Export potential of peanuts

   3. Cost of production of agri-based import substitutes

   4. Distribution of earnings brought about by exportation.

Concluding Remarks:

Socio-economic researches on peanuts are very limited as presented earlier. It is as expected, because, as of now, our policymakers are still production oriented - how to increase our level of production. However, the acceptability and adoption of package of technology do not depend only on just producing the highest yield, but whether it gives the highest net return hence justifying socio-economic evaluation of the different packages of technology.

Also in farm business, production is only half of the process, the other half is marketing. It is increasing the production of crops that will be saleable in the market that will really have more impact to the economic welfare of our people. Marketing strategies and development of marketing schemes need to be given equal attention so as to achieve the full benefits brought by increased level of production. If otherwise, then gains attained through improved production will be offset by inadequacies on inefficiencies in marketing.

LITERATURE CITED

Deomampo, N. R. et. al. Commodity Industry Analysis. College of Development Economics and Management. U. P. at Los Banos, 1984.

Gregorio, A. J. A Trend Analysis of Production, Area, Yield and Prices of Peanuts in the Philippines, 1948-1966. Unpublished Undergraduate Thesis, U. P. at Los Banos, 1969.

Guzman, M. E. R. Production and Marketing of Peanuts at Farm Level in Enrile, Cagayan. Unpublished Undergraduate Thesis, UPLB, 1983.

Huelgas, R. R. et. al. Production and Marketing of Peanuts in Luzon. PCARRD Project 1976.

Ignacio M. C. Management of Peanut Farms in Some Selected Municipalities of Isabela. Unpublished undergraduate thesis. UP College of Agriculture, 1973.

Lizarondo, M. S. et. al. Peanut Farming in Davao del Sur. Cost Structure and Management Aspects. Agricultural Marketing Report. Vol. V No. 1, BAEcon, Feb. 1983.

Lizarondo, M. S. et. al. Peanut Farming in Zamboanga Del Sur. Cost Structure and Management Aspects. 1981 Agricultural Marketing Report. Vol. VI No. 1. BAEcon. January 1984.

_____. A Study of the Costs and Returns and Management of Peanut Farms in Antique. Agricultural Marketing Report Vol. IV. No. 3 BAEcon. May-June 1982.

State of the Art. Peanut Research Crop Series No. 4. PCARRD. 1983.

Tanyag, E. G. et. al. Comparative Input, Output and Financial Data for Cotton, Palay, Onion, Cabbage, Peanut and Tobacco in Nueva Ecija and Tarlac. SSD, MA. Diliman, Quezon City.

Table 1. Peanut production, area and yield per hectare, by region and by year, Philippines, 1976-82.

Region	1976	1977	1978	1979	1980	1981	1982	1983*
Philippines								
Area ('000 ha.)	60.62	62.72	47.90	53.83	55.14	38.70	56.45	48.54
Production ('000 MT)	40.84	46.18	37.76	49.52	49.89	29.57	48.64	35.82
Yield (MT/ha)	0.67	0.74	0.79	0.92	0.90	0.76	0.86	0.74
Ilocos Region								
Area	5.88	5.89	6.10	6.47	6.58	5.65	5.87	5.76
Production	6.80	10.56	10.85	11.37	11.58	9.73	9.95	10.27
Yield	1.16	1.79	1.78	1.76	1.76	1.72	1.70	1.78
Cagayan Valley								
Area	34.39	36.85	21.37	25.74	25.99	10.56	28.31	23.90
Production	20.91	22.59	12.61	22.33	22.56	4.34	22.94	13.82
Yield	0.61	0.61	0.59	0.87	0.87	0.41	0.81	0.58
Central Luzon								
Area	1.14	1.24	1.30	1.54	1.59	1.55	0.89	1.10
Production	0.57	0.88	0.88	1.07	1.00	1.04	0.65	0.75
Yield	0.50	0.71	0.68	0.69	0.63	0.67	0.73	0.68
Southern Tagalog								
Area	4.25	4.56	4.19	4.04	4.07	3.99	3.95	3.84
Production	2.67	2.81	2.72	2.94	3.12	2.98	2.95	2.42
Yield	0.63	0.62	0.65	0.73	0.77	0.75	0.75	0.63
Bicol								
Area	2.33	2.04	1.91	1.89	1.77	1.71	1.66	1.45
Production	2.12	1.95	2.33	2.63	2.02	2.03	1.97	1.47
Yield	0.91	0.96	1.22	1.39	1.14	1.19	1.17	1.01
Western Visayas								
Area	2.25	2.39	2.56	2.62	3.19	3.18	3.12	2.45
Production	0.83	2.07	1.19	1.25	1.68	1.74	1.71	1.31
Yield	0.37	0.87	0.46	0.48	0.53	0.55	0.55	0.53

...

Table 1. (continued)

Region	1976	1977	1978	1979	1980	1981	1982	1983*
Central Luzon								
Area	4.19	3.83	3.87	3.78	4.05	4.27	4.14	2.82
Production	1.99	0.85	2.12	1.86	1.74	1.87	1.70	1.08
Yield	0.47	0.22	0.55	0.49	0.43	0.44	0.41	0.37
Eastern Visayas								
Area	1.32	1.28	2.28	2.78	2.64	2.54	2.17	0.86
Production	0.88	0.63	1.62	1.91	1.83	1.59	1.30	1.70
Yield	0.67	0.49	0.71	0.69	1.44	0.63	0.60	0.51
Western Mindanao								
Area	1.38	1.16	0.95	0.92	0.95	1.09	2.32	1.94
Production	1.00	0.90	0.51	0.49	0.52	0.66	1.76	0.94
Yield	0.73	0.78	0.54	0.54	0.55	0.61	0.76	0.48
Nothern Mindanao								
Area	1.11	1.12	1.19	1.37	1.60	1.35	1.18	0.85
Production	0.83	0.69	1.00	1.04	1.19	0.95	0.92	0.72
Yield	0.95	0.62	0.84	0.76	0.74	0.70	0.78	0.85
Southern Tagalog								
Area	0.91	0.85	0.83	0.89	0.98	1.11	1.11	1.18
Production	0.84	1.27	0.65	0.77	0.81	0.88	0.82	0.78
Yield	0.92	0.67	0.78	0.87	0.83	0.79	0.74	0.66
Central Mindanao								
Area	1.47	1.51	1.35	1.79	1.73	1.70	1.73	1.45
Production	1.39	1.27	1.28	1.86	1.86	1.77	1.96	1.39
Yield	0.95	0.84	0.95	1.04	1.08	1.04	1.13	0.96

*Preliminary report.

Source: BAEcon, Quezon City.

Table 2. Five leading regions and provinces in peanut production, 1982.

Rank	Province	Region
1	Isabela	Cagayan Valley
2	Pangasinan	Ilocos
3	Batangas	Southern Tagalog
4	Albay	Bicol
5	Lanao del Norte	Central Mindanao

Source: BAEcon, Quezon City.

Table 3. Percentage contribution of peanuts to total agricultural crops by areas, quantity and value of production, Philippines, 1982.

Item	1982	Present
Total Agricultural Crops		
Area ('000 ha)	12,204.73	100
Quantity ('000 MT)	29,711.73	100
Value ('000 ₱)	41,133.733	100
Peanuts		
Area ('000 ha)	56.45	0.46
Quantity ('000 MT)	48.64	0.16
Value ('000 ₱)	233.48	0.57

Source of Basic Data: Bureau of Agricultural Economics.

Table 4. Cost and returns of peanut per hectare, Philippines, 1983.

	MD[a]	MAD[b]	Amount (₱)
I. Variable cost			
A. Labor cost			
Land preparation			
1st plowing	-	7	245.00
2nd plowing	-	6	210.00
Harrowing (3x)	-	8	280.00
Furrowing	-	3	105.00
Fertilizer application	3	-	60.00
Planting	5	-	100.00
Cultivation (2x)	-	6	210.00
Spraying (4x)	8	-	160.00
Harvesting	9	-	180.00
Drying and storing	5	-	100.00
Sub-total			1,650.00
B. Input cost			
Seeds (100 kgs at ₱6.50/kg)			650.00
Fertilizers 4 bags 14-14-14 at ₱165/bag			660.00
Inoculant (2 kgs at ₱2.00/kg)			4.00
Pesticides and fungicides			390.00
Sub-total			1,704.00
II. Fixed Cost			
Land rental			500.00
Interest			184.52
Sub-total			684.52
TOTAL COST			4,038.52
III. Gross Income			
1,300 kg.[c] unshelled at ₱3.95/kilo[d]			5,135.00
IV. Net Income			1,096.48

[a]MD - ₱20.00/day

[b]MAD - ₱35.00/day

[c]Yield based on the Philippines Recommends for Peanut, 1978.

[d]Support price as of 1983.

Source: NFA, Quezon City.

Table 5. Supply and demand gap of peanuts, Philippines, 1970/71-1979/80 and 1984/85 and 1989/90.

Year	Production	Domestic Demand	Exports	D - S Gap
		'000 M. T.		
1970-71	13.29	13.58	.01	(0.30)
1971-72	13.35	13.34	.01	-
1972-73	12.85	13.73	-	(0.89)
1973-74	15.21	23.51	-	(8.30)
1974-75	25.49	34.76	.04	(8.81)
1975-76	28.78	36.76	.02	(8.00)
1976-77	32.32	43.29	.02	(10.79)
1977-78	26.07	35.63	.15	(9.71)
1978-79	27.55	40.31	-	(12.76)
1980	28.59	39.32	-	10.73
Projected				
1984-85	33.47	45.55	-	(12.08)
1989-90	38.96	51.03	-	(12.07)

a) Based on "Philippine Food and Agricultural Development and Prospects for the 1980's", IAPMP. Policy Analysis Staff. MA Quezon City.

b) Includes seeds, food use, feed and waste.

Table 6. Volume and value of peanut exports and imports, Philippines, 1976-1982.

Year	Exports a/ Qty. M.T.	Exports a/ Value FOB $'000	Imports b/ Qty. M.T.	Imports b/ Value FOB $'000
1976	6.6	7.55	2982	494.41
1977	0.3	0.35	4030	819.65
1978	2.31	6.90	3620	678.00
1979	2.40	6.32	10867	1000.38
1980	4.36	15.69	4835	828.00
1981	8.29	18.21	20753	5841.00
1982	1.97	5.88	912	161.31

a/ Includes roasted and peanut butter

b/ Includes roasted, oil cake and other nesidues of groundnuts.

Source: Foreign Trade Statistics NCSO.

Table 7. Average wholesale price of peanuts unshelled and shelled, Philippines, 1970 to 1981 and 1976-1982.

Month	Wholesale Price of Peanut: Unshelled (₱ per 20 kilos)	Wholesale Price of Peanut: Shelled ₱ per 25 gantas
January	90.86	235.54
February	92.40	242.65
March	89.50	236.68
April	89.04	242.30
May	91.28	246.13
June	92.10	253.40
July	95.56	261.17
August	93.95	260.94
September	99.77	244.19
October	101.12	259.37
November	100.86	266.51
December	97.25	259.17

Table 8. Yearly average retail price of peanut shelled per ganta, by region, Philippines, 1976-1982.

Region	1976	1977	1978	1979	1980	1981	1982
Philippines	10.37	10.39	9.68	12.50	13.31	13.84	13.48
Ilocos	12.53		9.55	10.79	12.04	12.79	11.14
Cagayan Valley	12.70	14.40	13.23	15.10	17.11	20.15	19.73
Central Luzon	13.68	13.25	10.74	12.37	13.74	15.15	15.39
Southern Tagalog	10.73	10.56	9.54	9.85	11.52	12.30	11.66
Bicol	7.46	7.60	9.30	10.20	10.74	11.64	12.22
Western Visayas	8.68	6.70	6.50	7.75	8.67	9.60	9.30
Central Visayas	7.06	6.25	6.51	7.76	8.36	10.29	10.66
Eastern Visayas	8.82	6.66	11.15	13.47	16.32	-	-
Western Mindanao	6.81	11.76	6.46	7.10	8.25	7.92	8.12
Northern Mindanao	7.84	8.23	10.23	11.07	11.47	15.45	13.66
Southern Mindanao	9.70	9.45	9.42	9.08	11.30	12.25	13.57
Central Mindanao	5.05	6.03	7.19	9.35	8.38	12.63	9.95

Table 8. Yearly average retail price of peanut shelled per ganta, by region, Philippines, 1976-1982.

Region	1976	1977	1978	1979	1980	1981	1982
Philippines	10.37	10.39	9.68	12.50	13.31	13.84	13.48
Ilocos	12.53		9.55	10.79	12.04	12.79	11.14
Cagayan Valley	12.70	14.40	13.23	15.10	17.11	20.15	19.73
Central Luzon	13.68	13.25	10.74	12.37	13.74	15.15	15.39
Southern Tagalog	10.73	10.56	9.54	9.85	11.52	12.30	11.66
Bicol	7.46	7.60	9.30	10.20	10.74	11.64	12.22
Western Visayas	8.68	6.70	6.50	7.75	8.67	9.60	9.30
Central Visayas	7.06	6.25	6.51	7.76	8.36	10.29	10.66
Eastern Visayas	8.82	6.66	11.15	13.47	16.32	-	-
Western Mindanao	6.81	11.76	6.46	7.10	8.25	7.92	8.12
Northern Mindanao	7.84	8.23	10.23	11.07	11.47	15.45	13.66
Southern Mindanao	9.70	9.45	9.42	9.08	11.30	12.25	13.57
Central Mindanao	5.05	6.03	7.19	9.35	8.38	12.63	9.95

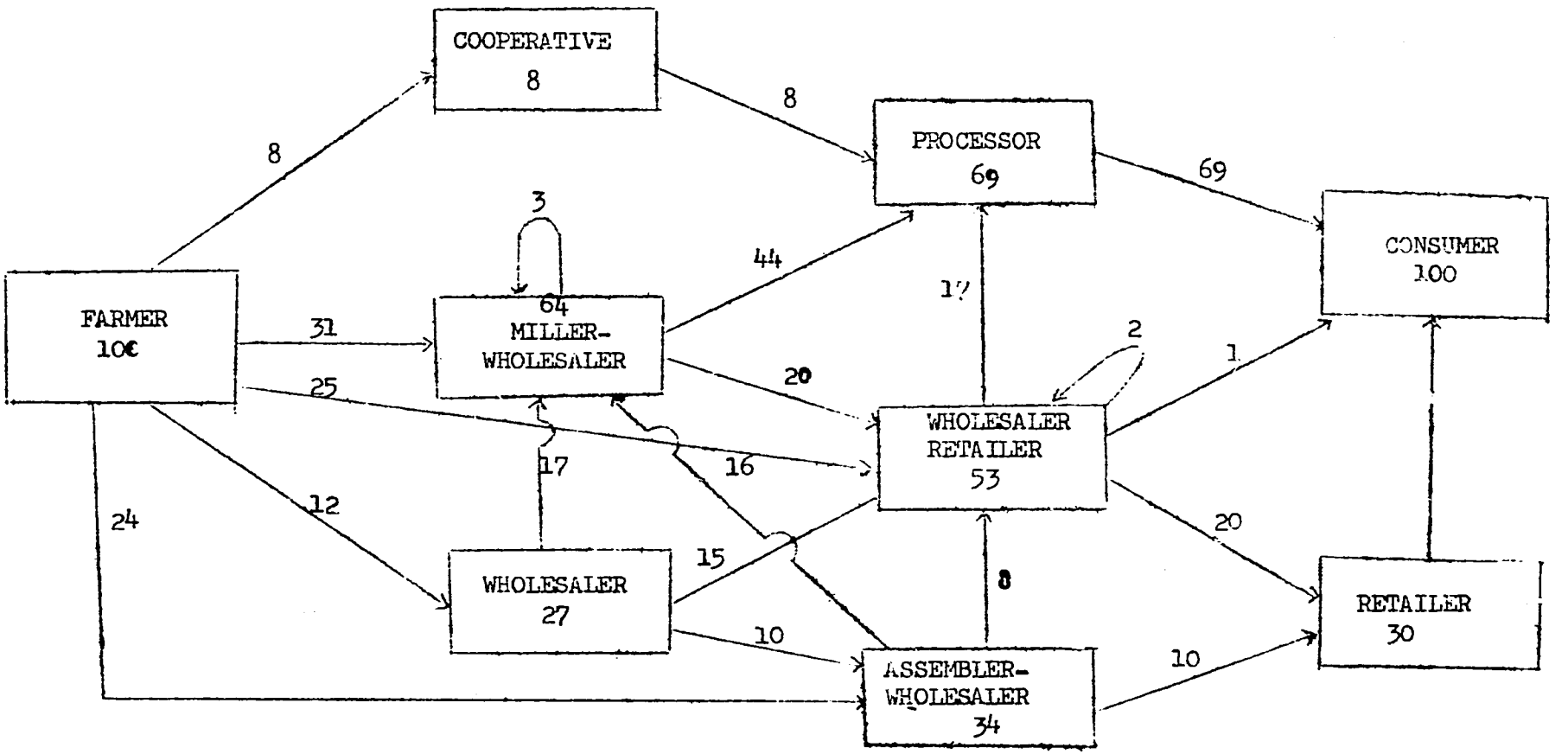

Figure 1. Marketing channels for peanut in Luzon, 1976
(Figures are in percent).

W O R K S H O P O U T P U T

FIRST NATIONAL PEANUT CONSULTATION AND PEANUT-CRSP REVIEW
PCARRD, Los Baños, Laguna
February 7-8, 1985

Group I - Varietal Improvement
Chairman: Mr. Benjamin Legaspi
Rapporteur: Mr. Joselito A. Payot

Members:	Agency
1. Elena M. Catipon	BPI-Economic Garden
2. Severina E. Reyes	BPI-Bohol
3. Feliciano S. Rosete	TCA, Camiling, Tarlac
4. Celestina B. Imperial	BPI, Bicol
5. Herminio M. Pava	CMU
6. Cecilia L. Garcia	BPI-Davao
7. Nestor J. Almodiente	MAF-LGES
8. Delia G. Concepcion	BPI-Tupi
9. Adelaida P. Martizano	BPI-Economic Garden
10. Ma. Visitacion Z. Perdido	BPI-Ilagan

ASSESSMENT OF TECHNOLOGY
PEANUT R & D

Group: Varietal Improvement

Area	Technology	Status				Remarks
		TG	TV	TP	TD	
Varietal	Upland culture (mono)	x	x			Needs preliminary yield trial at IPB and BPI-EG
	Partial shade Coconut		x			Needs preliminary yield trial of stable lines at: BPI-EG BPI-Bohol BPI-La Granja BPI-Bicol IPB BPI-Tupi
	Fruit trees		x			TCA (mango) BPI-Albay (citrus) BPI-Davao (Durian)
	Plantation Crops		x			CMJ (Rubber) USM (Rubber)
	Acid Soil		x			Needs screening of promising lines at: TCA, BPI-Bohol, IPB, CMU BPI-Ilagan, BPI- La Granja

TG - Technology Generation
TV - Technology Verification
TP - Technology for Pilot Testing
TD - Technology for Dissemination

ASSESSMENT OF TECHNOLOGY
Peanut R & D

Group: Varietal Improvement

A rea	Technology	Status				Remarks
		TG	TV	TP	TD	
Varietal	Drought tolerance		x			Needs screening of promising lines at IPB
	Pest Tolerance		x			Needs evaluation of early stable lines for the foll pest: - Nematodes and pod borer BPI-Tupi BPI-Davao - Foliar pests TCA CMU ISU-Echague IPB - Diseases UPLB USM CMU TCA BPI-EG
	Soil texture	x				Needs screening of breeding lines for different soil texture at: CMU TCA ISU-Echague
	Breeding for exotic varieties	x				Develop exotic var (jumbo size, multi-seeded etc.) at IPB, BPI-EG, and BPI-La Granja
	Pilot testing			x		Needs pilot testing of approved varieties in major and potential peanut production areas

FIRST NATIONAL PEANUT CONSULTATION AND PEANUT-CRSP REVIEW
PCARRD, Los Baños, Laguna
February 7-8, 1985

Group 2 - Cultural Management
Chairman: Dr. Joven Lales
Rapporteur: Ms. Noemi P. Orola a

Members:	Agency
1. Ms. Erlinda P. Sevilla	BPI-CES
2. Dr. Santiago R. Obien	PTRTC
3. Ms. Milagros T. Bucag	ISU-Cabagan
4. Mr. Expedito A. Villanueva, Jr.	DMMMSU
5. Mr. Catalino B. Cruz, Sr.	TCA
6. Mr. Andres A. Queddeng, Jr.	NFA
7. Dr. Marianito R. Villanueva	ViSCA
8. Mr. Jimmy P. Domingo	CSU
9. Mr. Vic Paner	Ayala Agricultural Development Corp.
10. Mr. Omar Taguiang	NSTA
11. Mr. Alberto B. Santos	ISU-Echague
12. Dr. Filomena Campos	CLSU

SUMMARY OF RECOMMENDED RESEARCH AND DEVELOPMENT PROJECTS ON PEANUTS

Group II. CULTURAL MANAGEMENT

RESEARCH THRUST	PROJECT TITLE	IMPLEMENTING AGENCY/STATION	DURATION	SOURCE OF FUND	BUDGETARY REQUIREMENT YEAR 1	YEAR 2	YEAR 3	YEAR 4	YEAR 5	TOTAL
	Development of Alternative (low cost) production techniques for peanut	IES, ISU, La Granja, BPI-Tupi, DMMMSU, TAC	4 yrs.	PCARRD / implementing agencies						500,000
	Development of appropriate cultural techniques for various peanut intercrops	ViSCA, ISU, BPI-Tupi, La Granja	2 yrs.	PCARRD/ implementing agencies						600,000
	Documentation of traditional cultural practices for peanut in Region III	CLSU	1 yr.	PCARRD / implementing agencies						50,000
	Development of appropriate cultural techniques for high-quality seeds	UPLB, IES	3 yrs.	PCARRD / implementing agencies						160,000
	TOTAL									1,360,000

ASSESSMENT OF TECHNOLOGY
Peanut R & D

Group: Cultural Management

Area	Technology	Status				Remarks/Implementing Agencies
		TG	TV	TP	TD	
1. Land Preparation	Minimum Technology		x			CSU, IES, ISU, BPI-Tupi DMMMSU, TAC
2. Fertilizer Management	Organic vs. Inorganic		x			ISU, La Granja, BPI-Tupi, DMMMSU, TAC
	Inoculant-Inorganic combination		x			IES, La Granja, BPI-Tupi, DMMMSU
	Calcium fertilization (lime vs. gypsum)		x			La Granja, ISU, BPI-Tupi, DMMMSU, TAC
3, Irrigation	Irrigation scheduling	x				UPLB, ISU, DMMMSU, TAC, USM
4. Cropping system	Corn-peanut		x			ISU, BPI-Tupi, ViSCA, USM
	sugarcane-peanut		x			La Granja
	peanut under coconut		x			ViSCA
	peanut-rice		x			UPLB, DMMMSU, USM
5. Seed Production	Cultural techniques for high quality seeds for planting		x			UPLB, IES

TG - Technology Generation
TV - Technology Verification
TP - Technology for Pilot Testing

FIRST NATIONAL PEANUT CONSULTATION AND PEANUT-CRSP REVIEW
PCARRD, Los Baños, Laguna
February 7-8, 1985

Group 3 - Pest Management
Chairman: Dr. Florendo Quebral
Rapporteur: Ms. Marita Acompañado

Members:	Agency
1. N. S. Franje	CMU
2. E. P. Cadapan	UPLB
3. M. Cabie	Cagayan farmer
4. D. A. Lobo	UPLB
5. L. C. Bajit	TCA
6. O. Opina	UPLB
7. C. Medina	UPLB
8. A. Piamonte	UPLB
9. L. E. Fabro	UPLB
10. P. P. Pamplona	USM
11. R. S. Guzman	ISU-Cabagan
12. C. Adalla	UPLB

ASSESSMENT OF TECHNOLOGY
Peanut R & D

Group: 3 - Pest Management

Area	Technology	Status				Remarks
		TG	TV	TP	TD	
Control of black spot and rust on peanut	Use of resistant varieties				X	UPLPn4 is not resistant to insect pests and weeds (PCARRD)
Integrated pest management on peanut	1. disease control using the following chemicals: Daisene Mx, Daconil or Bravo & Dithane M45 2. weed control using a) chemicals pendimethalin basagran b) cultural method off-barring hilling-up hand weeding 3. insect control a) chemicals (monocrotophos) b) biocontrol (Trichograma sp)			X		Develop on-farm integrated pest management with the emphasis on the economics of control UPLB, CMU, USM, TCA, ISU-C and E
The effect of gypsum ($CaSO_4 \cdot 2H_2O$) and calcic limestone ($CaCO_3$) as calcium sources on the incidence of black spot and rust on peanut			X			CMU, UPLB, ISU-C, TCA, USM

TG - Technology Generation
TV - Technology Verification
TP - Technology for Pilot Testing
TD - Technology for Dissemination

st Management.

Technology	Status				Remarks
	TG	TV	TP	TD	
ETL of insects, weeds and disease of peanut	X				UPLB, ISU-C, ISU-E
Verification of post-emergence herbicides		X			USM, ISU-E, CMU, TCA
Identification and transmission studies on viruses	X				UPLB, CMU, USM, ISU-C
Control methods for viruses	X				UPLB
Search for more biocontrol agents	X				UPLB, ISU-C
Epidemiological and forecast studies	X				UPLB
Studies on yield loss assessment due to pests	X				UPLB
Studies on peanut storage pests	X				UPLB
Botanical sources of pesticides against peanut pests	X				UPLB, TCA, USM, CMU, ISU-E and C
Studies on seed-borne pathogens	X				UPLB
Pest management of peanut in various cropping patterns	X				UPLB

SUMMARY OF RECOMMENDED RESEARCH
AND DEVELOPMENT PROJECTS ON PEANUT

Group 3: Pest Management

RESEARCH THRUST	PROJECT TITLE	IMPLEMENTING AGENCY/STATION	DURATION	SOURCE OF FUNDS	BUDGETARY REQUIREMENT					
					YEAR 1	YEAR 2	YEAR 3	YEAR 4	YEAR 5	T O T A L
Food and Nutrition	Control of black spot and rust (publications and campaign)	PCARRD	indefinite							50,000
	Integrated pest mgt. on peanut	UPLB/CMU, USM, ISU-C, TCA ISU-E	2 years							240,000
	The effect of gypsum ($CaSo_4 .2H_2O$ and calcic limestone ($CaCO_3$) as calcium sources on the incidence of black spot and rust on peanut	CMU/UPLB,	2 years							180,000
	Economic threshold level (ETL) of insects, weeds and disease of peanut	UPLB/ISU	3 years							276,000
	Identification and transmission studies on viruses	UPLB/CMU, USM, ISU-C	5 years							300,000
	Control methods for viruses	UPLB	5 years							250,000
	Search for more bio-control agents	UPLB	5 years							400,000
	Epidemiological and forecast studies	UPLB	2 years							100,000
	Botanical sources of pesticides against peanut pests	UPLB/TCA USM, CMU, ISU-E, ISU-C	5 years							250,000

ST	PROJECT TITLE	IMPLEMENTING AGENCY/STATION	DURATION	SOURCE OF FUNDS	BUDGETARY REQUIREMENT YEAR 1:	YEAR 2:	YEAR 3:	YEAR 4:	YEAR 5	TOTAL
	Studies on yield loss assessment due to pests	UPLB	2 years							100,000
	Studies on peanut storage pests	UPLB	2 years							100,000
	Studies on seed-borne	UPLB	2 years							100,000
	Pest management for peanut in various cropping patterns	UPLB	5 years							300,000
	Verification of post-emergence herbicides	USM/ISU-E, CMU, TCA	3 years							276,000
	TOTAL									2,746,000

FIRST NATIONAL PEANUT CONSULTATION AND PEANUT CRSP REVIEW
PCARRD, Los Baños, Laguna
February 7-8, 1985

Group IV - Postharvest Handling, Utilization and Marketing
Chairman: Dr. Paciencia Manuel
Rapporteur: Ms. Ma. Flordeliz Tiamzon

Members

1. Ms. Loreto U. Dumada-ug
2. Ms. Raquel J. de la Cueva
3. Dr. Rosalinda Perez-Garcia
4. Dr. Paciencia Manuel
5. Ms. Paciencia C. Manuel
6. Ms. Erlinda P. Sevilla
7. Ms. Virginia Pacaba
8. Ms. Gloria Picar
9. Dr. Isagani Sarmiento
10. Mr. Gorgonio Barut
12. Ms. Jane Cervantes

Group IV: Post Production, Handling, Utilization and Marketing

Area	Technology	Status TG	TV	TP	TD	Remarks/Implementing Agencies
2. Seed Storage	Viability and quality of seeds in relation to chemical composition	x				UPLB, BPI
	Level of moisture content/length of storage			x		BPI
	Packaging materials in relation to shelled and unshelled peanuts	x				There's an ongoing project using CO_2 in packaging peanuts at UPLB. BPI proposes a research on this.
	Evaluation of the existing shellers for seed purposes		x			AMTECH, UPLB
	Study on drying characteristics for seed purpose	x				BPI-UPLB
	Chemical control of seed borne storage fungi					UPLB
3. Processing and utilization	Product development (as food product and food ingredients)	x				BPI
	Decontamination of peanuts for peanut butter		x	x		CMC/FNRI Ongoing from ASEAN funds
	Determination of aflaroxin from raw to finished product				x	Critical issue to be directed to the policy makers d
4. Socio-economics of seed production and marketing	Grading standards in relation to pricing (for seed)					BPI
	Grading standards in relation to pricing (for commercial)	x				NFA, UPLB, NAPPHIRE
	Pricing and market structure studies	x				NAPPHIRE, UPLB

ASSESSMENT OF TECHNOLOGY
Peanut R & D

Group IV: Post Production, Handling, Utilization and Packaging

Area	Technology	Status				Remarks/Implementing Agencies
		TG	TV	TP	TD	
1. Harvesting, threshing, drying, shelling, storage and marketing	Baseline data/information on the whole peanut post-production aspects and marketing	x				NAPPHIRE, ISU, NGA, proposal already submitted by NAPPHIRE to IDRC for funding
	Establishment of benchmark information on the peanut post-production system/ Industry					
	1. Socio-economics and marketing survey (mainly for peanut for food purposes)					
	2. AF buildings vis-a-vis post production operation and time throughout the peanut post production system					
	3. Initial testing of prototype peanut stripper for use					
	- Initial production of on-farm storage practice for seed purposes					
	4. *Generated output/information will serve as a basis for developing appropriate post production technologies (both software and hardware) and intervention measures/ support mechanisms to promote the development of the peanut industry					
Drying	Evaluation of using rice dryers for peanuts					UPLB

TG - Technology Generation
TV - Technology Verification
TP - Technology for Pilot Testing
TD - Technology for Dissemination

SUMMARY OF RECOMMENDED RESEARCH
AND DEVELOPMENT PROJECTS ON PEANUT

RESEARCH THRUST	PROJECT TITLE	IMPLEMENTING AGENCY/STATION	DURATION	SOURCE OF FUND	BUDGETARY REQUIREMENTS (P)'000 YEAR 1	YEAR 2	YEAR 3	YEAR 4	YEAR 5	TOTAL
Food & Nutrition	Baseline date/information generation on Peanut Post-Production and marketing system in Visayas & Mindanao	UPLB/PIDI/ NAPHIRE	2 yrs.	CRSP	350	350				700,000
	Chemical control of seedborer and storage fungi	NCPC/ UPLB	2 yrs.	CRSP	300	350				700,000
	Seed storage technology for Peanut	BPI	1½ yrs.	CRSP	30	20				52,000
	Biochemical changes of peanut seeds during storage	BPI	1½ yrs.	CRSP	25	17				42,000
	Evaluation of existing peanut shellers for seed purposes	AMTEC/UPLB	2 yrs.	CRSP	150	100				250,000
	Drying characteristics of peanuts for seed purposes	UPLB/BPI	2 yrs.	CRSP	100	100				200,000
	The use of peanut flour and cassava flour blend in the formulation of snack food	BPI/FNRI	2 yrs.	CRSP	200	200				400,000

RESEARCH THRUST	PROJECT TITLE	IMPLEMENTING AGENCY/STATION	DURATION	SOURCE OF FUND	BUDGETARY REQUIREMENT (₱' 000) YEAR 1	YEAR 2	YEAR 3	YEAR 4	YEAR 5	TOTAL
	The preparation of high protein noodles from peanut flour blended with locally produced flour	BPI	1 yr.	CRSP	10	15				25,000
	Socio-economics of Peanut Production and Marketing	UPLB/NFA ISU, MMSU, CLSU, ViSCA, USM	2 yrs.	CRSP	200	200				400,000
	Socio-economics of seed production & marketing	UPLB/ BPI/NFA	2 yrs.	CRSP	300	300				600,000