PN-ABB-045

AGENCY FOR INTERNATIONAL DEVELOPMENT
PPC/CDIE/DI REPORT PROCESSING FORM

ENTER INFORMATION ONLY IF NOT INCLUDED ON COVER OR TITLE PAGE OF DOCUMENT

1. Project/Subproject Number: 84-0001

2. Contract/Grant Number: DAN-5428-A-00-3047-00

3. Publication Date: June 27, 1988

4. Document Title/Translated Title: The Range of Choice in Palm Oil Processing Technologies for Cameroon

5. Author(s)
1. Eric L. Hyman
2.
3.

6. Contributing Organization(s): Appropriate Technology International

7. Pagination: 122p.

8. Report Number:

9. Sponsoring A.I.D. Office: Bureau for Science and Technology

10. Abstract (optional - 250 word limit)

This paper discusses the ecological, agronomic, and industrial factors affecting the economics of palm oil production. It begins with a description of the characteristics of palm oil and palm kernel oils, and the cultivation and harvesting of oil palm. The current and projected supply and demand for palm oil on the world market and the domestic market in Cameroon are assessed, along with the implications for international trade, domestic consumption, and prices. It also examines the prospects for the industry in Cameroon, including large-scale firms, minimills, and artisanal producers.

The second part of this study describes and compares the economics of various palm oil production technologies including the traditional rural method; artisanal-level alternatives such as small-scale expellers, screw-operated batch presses, manual hydraulic presses, and phase separation extractors.

11. Subject Keywords (optional)
1. palm oil
2. Cameroon
3.
4.
5.
6.

12. Supplementary Notes

13. Submitting Official: Nancy Tresp

14. Telephone Number: 202-879-2905

15. Today's Date: Sept. 30, 1988

DO NOT write below this line

16. DOCID

17. Document Disposition: DOCRD [ ] INV [ ] DUPLICATE [ ]

DRAFT FORM

PN-ABB-045

The Range of Choice in Palm Oil Processing Technologies for Cameroon

by

Eric L. Hyman, Ph.D.[1]

[1]Evaluation Economist
Appropriate Technology International
1331 H St., N.W.
Washington, DC 20005 USA

June 27, 1988

The viewpoints expressed here are those of the author and not necessarily those of Appropriate Technology International ATI). The author would like to thank Edward Perry (ATI), and Alain Laffitte, Joseph Moutsi, and Jean-Bosco Toukam of the Association Pour La Promotion des Initiatives Communautaires Africaines (APICA) in the Cameroon for providing essential data. Helpful comments on this draft were received from Frans Korthals Altes (Royal Tropical Institute, Netherlands), Carl Bielenberg (Private Consultant), Alain Laffitte (APICA), Bob Spaenhoven (UNATA, Belgium); I. Herbst and I. Weissenborn (GATE); and Tim Mooney, Michael O'Donnell, Glenn Patterson, John Skibiak, John Slavics, and Ton de Wilde (ATI).

TABLE OF CONTENTS

	Page
LIST OF TABLES	iv
LIST OF FIGURES	vi
ABSTRACT	viii
PART I: THE CONTEXT	1
Characteristics of Palm and Palm Kernel Oil	1
The Situation of Cameroon	3
Ecological Niche of Oil Palm in Cameroon	3
Varieties of Oil Palm	7
Establishment and Growth of Oil Palm	9
Harvesting and Storage of Palm Fruits	9
Current Supply of Palm and Palm Kernel Oils	10
World Production	10
Cameroon	12
A. Industrial-Scale Production	16
B. Artisanal-Scale Production	19
Current and Future Demand for Palm and Palm Kernel Oils	19
World	19
Cameroon	20
Exports	25
World	25
Cameroon	27
Prices of Oil Palm Products	27
World Market Prices	27
Domestic Prices in Cameroon and the Effect of Government Policies	29

TABLE OF CONTENTS (cont'd)

Page

PART II: DESCRIPTION AND APPROPRIATENESS OF PROCESSING TECHNOLOGIES 33

Origin and Objectives of the ATI Project 33

The Traditional Technology 37

Small-Scale Expellers 42

Colin Expeller 42

Horizontal Caltech Expeller 47

Vertical Caltech Expeller 53

Screw-Operated Batch Presses 55

TCC (Kumasi) Press 56

SODIZI (Casamance) Press 58

Sierra Leone Press 60

Tikonko Press 60

KIT Screw-Operated Batch Press 62

UNATA Press 64

Hydraulic Presses 67

Stork Manual Hydraulic Press 68

NIFOR Manual Hydraulic Press 68

KIT Hydraulic Press 68

CENEEMA Hydraulic Press 72

RVR Manual Hydraulic Press 72

European, Motorized Hydraulic Presses 72

An Indian, Motorized Hydraulic Press 75

Phase Separation Extractors 75

Auxiliary Equipment for Artisanal Production of Palm Oil 77

TABLE OF CONTENTS (cont'd)

Page

Cooking of Palm Fruits 77

A Manual Bunch Stripper 80

Pounding of Palm Fruits 84

Clarification of Raw Oil 86

Oil Palm Oil Processing in the Formal Sector 89

Medium- and Large-Scale Industry 89

Minimills 92

Palm Oil Refining 96

The Quality of Palm Oil Produced 97

Economic Analysis of Selected Pressing Technologies 99

Artisanal- and Small-Scale Industry 99

Medium- and Large-Scale Industry 107

Conclusions 110

REFERENCES 115

LIST OF TABLES

		Page
Table 1	Composition of Crude Palm and Palm Kernel Oils	2
Table 2	Average World Production of Palm Oil (1,000 t)	13
Table 3	Average World Production of Palm Kernels (1,000 t)	14
Table 4	Projected World Palm Oil Production	15
Table 5	Major Oil Mills in Cameroon	18
Table 6	Historical and Projected Consumption of Palm Oil (thousand tonnes)	21
Table 7	Production Forecast for Industrial Palm Oil, for the Season 2000-2001	23
Table 8	Historical and Projected International Trade in Palm Oil	26
Table 9	Production Costs of Oil Palm Products in Six Countries in 1982 ($/tonne)	28
Table 10	Correlation Matrix of Prices for Selected Fats and Oils	31
Table 11	Labor Requirements for the Traditional Process in Otele, Cameroon	41
Table 12	Work Hours Required for Processing 150 kg of Dura in the Gambia	65
Table 13	Summary of Characteristics of Selected Artisanal-Scale Presses	79
Table 14	A Comparison of the Chemical Characteristics of African Palm Oil	98
Table 15	Assumptions for the Economic Analysis of Artisanal- and Small-Scale Presses	100
Table 16	Summary of the Economic Analysis of Artisanal- and Small-Scale Presses (1,000 CFA)	105

LIST OF TABLES (cont'd)

Table 17 Capital Costs of the Large-Scale Idenau Mill 108

Table 18 Operating Costs of the Idenau Mill (1,000 CFA) .. 109

LIST OF FIGURES

		Page
Figure 1	Political Map of Cameroon	4
Figure 2	Major Geographic Regions and Features of Cameroon	5
Figure 3	Ecological Conditions Affecting Oil Palm Cultivation in Cameroon	6
Figure 4	Relationship Between Free Fatty Acid Content (%) in Palm Oil and Time Between Harvesting and Processing of the Fruit	11
Figure 5	Real Prices of Palm Oil on the World Market	30
Figure 6	Flowchart for the Traditional Processing of Palm Oil Production	38
Figure 7	An Installation for the Traditional Process of Palm Oil Production in Cameroon	39
Figure 8	Front View of a Manual Colin Expeller	43
Figure 9	Side View of a Manual Colin Expeller	44
Figure 10	Use of a Manual Colin Expeller	45
Figure 11	Side View of a Manual, Horizontal Caltech Expeller	48
Figure 12	Side View of a Motorized, Horizontal Caltech Expeller	49
Figure 13	Cross-Section of a Horizontal Caltech Expeller	50
Figure 14	The Vertical Caltech Expeller	54
Figure 15	The TCC Spindle Press	57
Figure 16	The SODIZI Press	59
Figure 17	The Sierra Leone Mark I Press	61
Figure 18	The KIT Screw-Operated Batch Press	63
Figure 19	The UNATA 4201 Press	66

LIST OF FIGURES (cont'd)

		Page
Figure 20	Cross-Section of a Multilayer, Manual Hydraulic Press	69
Figure 21	The NIFOR Press	70
Figure 22	The KIT Manual Hydraulic Press	71
Figure 23	The CENEEMA Manual Hydraulic Press	73
Figure 24	The RVR Manual Hydraulic Press	74
Figure 25	The Tropic 10 Extractor	76
Figure 26	The Wax Press	78
Figure 27	The KIT Sterilization Kettle	81
Figure 28	The KIT Reheating Kettle	82
Figure 29	A Manual Bunch Stripper Manufactured in Cameroon	83
Figure 30	The KIT Mortar for Pounding Palm Fruit	85
Figure 31	The KIT Clarifier	87
Figure 32	A Clarifier Manufactured in Cameroon	88
Figure 33	Examples of Palm Kernel Crackers	90
Figure 34	The Medium- and Large-Scale Process for Palm Oil Production	91
Figure 35	Oil and Kernel Losses in Large-Scale Processing of Oil Palm	93
Figure 36	Profitability of Selected Palm Oil Extraction Technologies	106

ABSTRACT

This paper discusses the ecological, agronomic, and industrial factors affecting the economics of palm oil production. It begins with a description of the characteristics of palm oil and palm kernel oils, and the cultivation and harvesting of oil palm. The current and projected supply and demand for palm oil on the world market and the domestic market in Cameroon are assessed, along with the implications for international trade, domestic consumption, and prices. It also examines the prospects for the industry in Cameroon, including large-scale firms, minimills, and artisanal producers.

The second part of this study describes and compares the economics of various palm oil production technologies including the traditional rural method; artisanal-level alternatives such as small-scale expellers, screw-operated batch presses, manual hydraulic presses, and phase separation extractors. Special attention is paid to the appropriateness of the following devices in artisanal production: the manual and motorized Colin, the manual and motorized, horizontal Caltechs developed in the Cameroon, the vertical Caltech, the UNATA 4201, and the NIFOR. Simple artisanal technologies for stripping palm fruit bunches and clarifying palm oil are also discussed. Technologies for medium- and large-scale industry are then covered.

The horizontal and vertical Caltechs are economically viable and preferable to competing technologies at a reasonable level of capacity use. However, some of the recent buyers of a press do not have sufficient hectarage in oil palm to warrant press ownership unless they are offering pressing services to others. The current market for the horizontal Caltech presses without subsidies is limited in Cameroon so sustainability of the manufacturing unit will depend on diversification of its product line and possible sales in other countries. Over the next 10 years or so, artisanal-scale production of palm oil will have to increase substantially in Cameroon to avoid production shortfalls caused by declines in production at industrial estates. Since large areas of semiwild oil palm remain unharvested, there is a basis for an expansion in artisanal production with appropriate pressing technologies.

PART I: THE CONTEXT

Characteristics of Palm and Palm Kernel Oil

Palm oil comes from the pulp (mesocarp) of the fruit of Elaeis guineensis. Another kind of oil, palm kernel oil, is obtained from the nut inside the fruit, but the kernel oil is of lesser economic importance than palm oil. Evidence of palm oil production and trade dates back 5,000 years (MacFarlane, Swetman, and Coursey 1984). This palm has a higher oil yield per unit area than any other oil crop. As much as 5.0-8.5 tonnes (t) of palm oil can be obtained per hectare (ha) under favorable conditions with intensive management. This compares to 2 t/ha from soybeans, 3 t/ha from rapeseed or olive oil, and 4 t/ha from sunflowerseeds or coconuts (Wood and Beattie 1981).

As a vegetable oil, palm oil contains no cholesterol although it is relatively high in saturated fats (table 1). However, an excess of saturated fats is not a common problem in the diets of the bulk of the population in most LDCs, given the average per capita consumption of fats. In fact, FAO/WHO estimate that 70% of malnourished children in LDCs just suffer from a shortage of calories, not protein. As a concentrated source of calories, increased consumption of oils could help solve this problem (Otto 1987). Moreover, research conducted at the Palm Oil Research Institute of Malaysia reportedly indicates that palm oil may have anti-thrombosis qualities that lower blood cholesterol levels despite the high saturated fat content ("Malaysia Sees Palm Oil Sector" 1987).

In addition, crude (unrefined) palm oil is high in carotenes, and it is generally consumed in this form in West and Central Africa. As a result, vitamin A deficiencies that are common in other parts of the Third World and can lead to xeropthalmia and other maladies are rare in this region.

Palm oil is important in the food processing industry. It is low foaming due to the low concentration of lauric acids, which makes it good for frying. Other major uses are in margarine, compound cooking fats, and shortening particularly for baked goods. In margarine, palm oil has a soft texture and a high melting point (Jasperson and Pritchard 1965; Asiedu 1986). As a shortening, it is no more saturated than its substitutes such as coconut oil, animal fat, or chemically hydrogenated soybean or other vegetable oils. The food industry's choice among these fats largely depends on relative prices at the time. It can also be used in ice cream, where permitted. However, crude or refined palm oil is not good for salad oil or coatings (Berger 1980).

With further processing, palm oil can be used for other products. The high proportion of palmitic acid in palm oil makes it good for soaps (Asiedu 1986). Other nonfood uses are as an oleochemical feedstock, substitute for tallow, and as a source of glycerol (Schwitzer 1980). Crude or refined palm oil can be fractionated into palm olein and stearin. The olein fraction can be used for salad and cooking oil. Transesterification can result in a similar level of unsaturated fat as olive oil. The stearin

TABLE 1
Composition of Crude Palm and Palm Kernel Oils

	Crude Palm Oil (Percent of Weight)	Palm-Kernel Oil (Percent of Weight)
Saturated Fatty Acids		
Caprylic	---	3-4
Capric	---	3-7
Lauric	---	46-52
Myristic	1-6	14-17
Palmitic	32-47	6-9
Stearic	1-6	1-2.5
Total	about 53	82
Unsaturated Fatty Acids		
Linoleic	5-7	0.5-2
Oleic	40-52	13-19
Total	about 47	18
Carotenes	250-2600 ppm	---

Source: Moll 1987

content can be increased for winterization to reduce solidification in cool climates (Wood and Beattie 1981).

Palm kernel oil is mainly used for high-value, non-edible purposes. Its properties are similar to those of coconut oil because it is high in lauric acid. After refining, kernel oil can also serve food processing uses.

The Situation of Cameroon

Cameroon is bordered by Nigeria, Chad, the Central African Republic, Congo, Gabon, and Equatorial Guinea (figure 1). In mid-1985, Cameroon had a population of 10.2 million, which is projected to increase 3.4% per year between then and the year 2000 (IBRD 1987). About 66% of the population is rural (FAO Investment Centre/IBRD 1986). Its land area is 47.5 million ha (IBRD 1987). The average population density is 18/km^2. One-third of the land area is arable, and a sizable area is uncultivated especially in the central, southern, and eastern portions (FAO Investment Centre/IBRD 1986). The total agricultural area is 7 million ha, of which 6 million ha is used for annual crops and the rest consists of tree crops (Moll 1987). Per capita GNP was $810 in 1985 and was growing 3.6% per year over the past 5 years. In 1980, the value added in agriculture was $2,245 million (IBRD 1987).

Cameroon has five main geographic regions: the western and coastal lowlands, the western highlands, the southern forest, the central savanna, and the northern plains (figure 2). The country has three main climatic regions (figure 3). The Equatorial climatic region occurs south of 7°N. It is divided into two subregions: the Guinean subregion, which has four seasons and total rainfall of 1,500-2,000 mm, and the Cameroonian subregion in the West where rainfall is 2,000-11,000 mm per year. The Sudanian climatic region, between 7-10° N has a 5-6 month dry season and total annual rainfall of 1,000-1,500 millimeters. Finally, the Sudano-Sahelian subregion has a dry season exceeding 7 months and receives less than 1,000 mm of rain a year. December to February is relatively dry in all three regions (Moll 1987).

Ecological Niche of Oil Palm in Cameroon

Oil palm is indigenous to Cameroon. In fact, the amount of wild palm trees has increased during regrowth after slash and burn cultivation because it cannot compete well with established, broad-leaved trees (MacFarlane, Swetman, and Coursey 1984). Areas with wild palm trees are not necessarily good sites for intensive management of high-yielding palm varieties (Richards 1984).

Cameroon

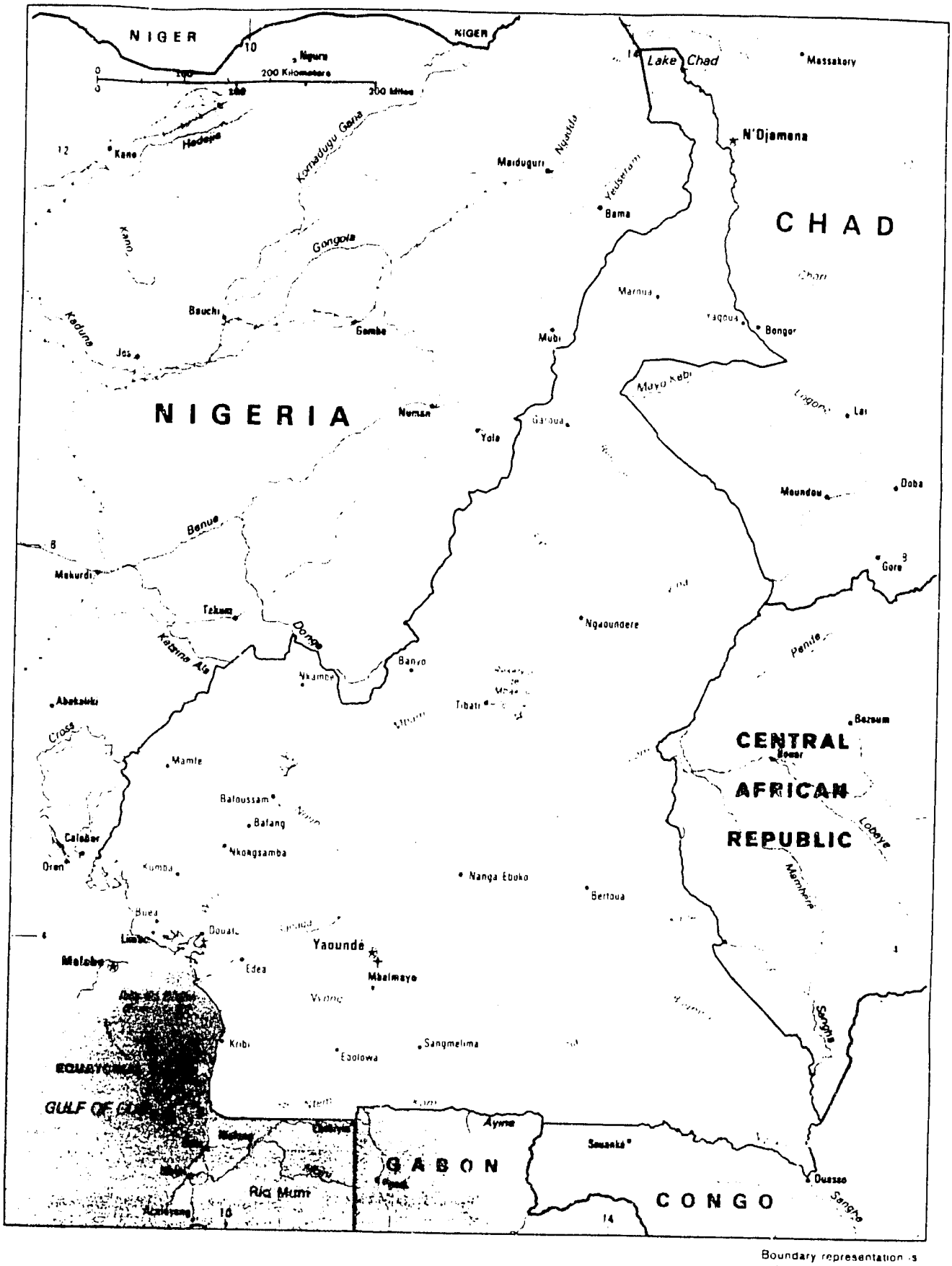

Boundary representation is not necessarily authoritative

International boundary
National capital
Railroad
Road
International airport

Figure 1. Political Map of Cameroon
Source: U.S. Department of State 1985.

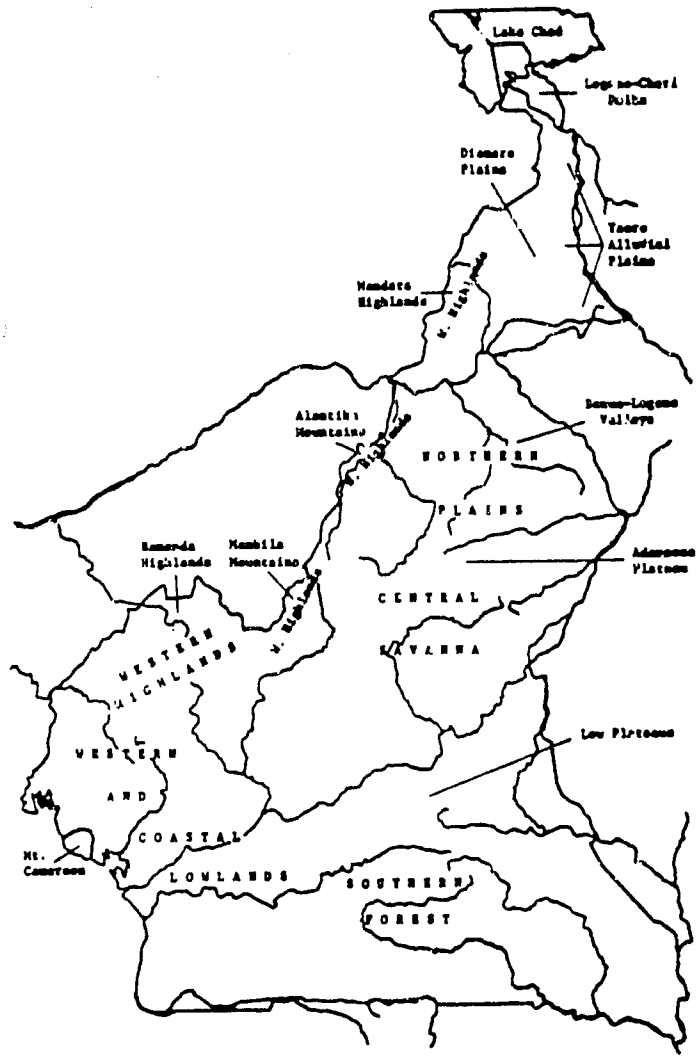

Figure 2. Major Geographic Regions and Features of Cameroon

Source: Hazlewood and Stotz 1981.

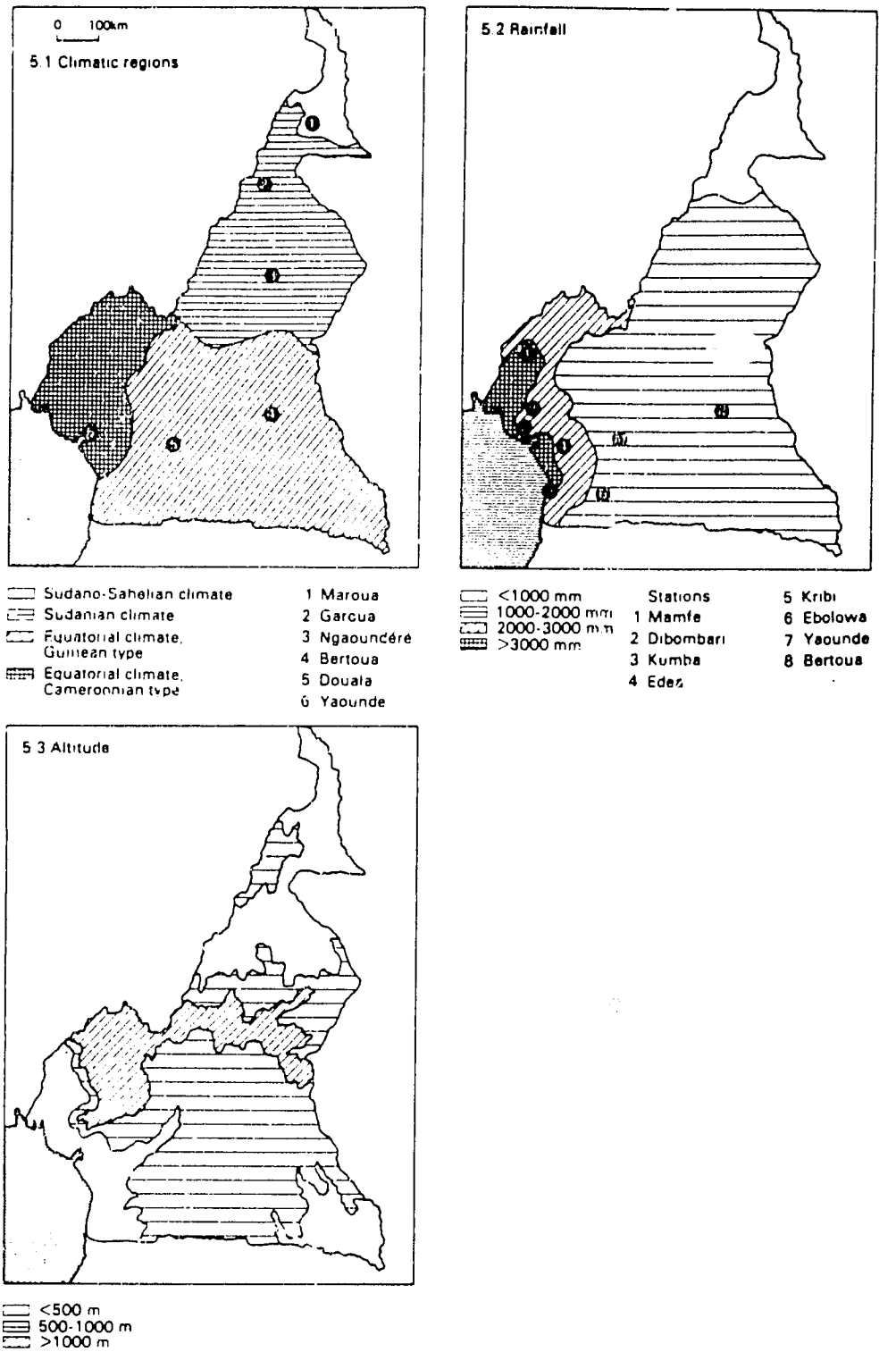

Figure 3. Ecological Conditions Affecting Oil Palm Cultivation in Cameroon

Source: Moll 1987.

Optimal conditions for oil palm include

*Sun: minimum of 2,000 h/y and an average of 165 h/mo
*Rain: minimum of 1,800 mm/y and an average of 150 mm/mo,
*Humidity: minimum of 75%
*Temperature: 26°C annual average, minimum monthly average 18°C
*Soil pH: neutral is preferable, but at least 4.5
*Soil moisture: no prolonged waterlogging, but temporary flooding with rapid drainage is acceptable;
*Soil fertility: high minerals content is less important than soil texture (French Ministry of External Relations 1984)

A high soil water-holding capacity is also important if there is a pronounced dry season. Total rainfall and the evenness of its distribution is the most critical factor (Moll 1987).

Parts of the south and west of Cameroon have sufficient precipitation for oil palm. At altitudes below 500 m, the temperatures are suitable for oil palm. Good growing conditions for oil palm are found in a 50-100 km wide stretch along the coast as well as the area around Mamfe in the west, except for the slopes of Mt. Cameroon and the Rumpi fields. Suitable land is available south of Douala for expansion of plantations, but high labor turnover and high transportation costs for the perishable fruits limit production.

Government policy encourages oil palm production in the forest zone. The competing crops in this area are cacao, rubber, coconuts, bananas, cassava, yams, and cocoyams (Moll 1987). The forest zone includes parts of the East, Center-South, Littoral, and Southwest provinces. It is largely populated by Beti, Fang, Bassa, and other Bantu groups; some of the Bassa areas have not yet returned to their population levels before the disorder around the time of national independence (Langley 1982).

Varieties of Oil Palm

Oil palm comes in several varieties that differ substantially in proportions of pulp and kernel in the fruits, oil content of the pulp, and yields of fruit per hectare. The thickness of the pulp varies from 2-10 mm and it may contain 40-55% oil by weight. Kernel oil may comprise 48-52% of the weight of the kernels (French Ministry of External Relations 1984). The principal varieties are Dura, Pisifera, Tenera, Macrocraxia, and unspecified wild palms.

Much of the semiwild palm harvested in Cameroon is Dura; some of which spread naturally from old plantations. Dura fruit has a thick shell, 2-8 millimeters, and a medium amount of pulp amounting to 35-55% of the total weight (Asiedu 1986). The palm oil content is 15-23% of the weight of the fruit. Equivalently, the oil content is 8.0-12.5% of the fresh fruit bunches containing the fruits and stalks (ffb) since stripped palm fruit

constitutes 55% of the bunch weight (Spaenhoven 1986). Dura fruit also has a large kernel, comprising 40-75% of the weight. Between 5.0 and 12.5% of the weight of the kernel is oil (Spaenhoven 1986). Deli Dura, a selected provenance taken from Sumatra, has a relatively high oil content because the fruit is 65% pulp (Asiedu 1986).

Pisifera has no kernels. It is not of commercial interest for oil production because the trees have a high proportion of fruits that do not ripen properly (French Ministry of External Relations 1984).

Tenera, a hybrid of Dura and Pisifera developed in the late 1950s, is the variety cultivated intensively on new plantations. The fruits tend to be larger than Dura and have a thin shell of 0.5-4.0 mm. The kernel amounts to just 4% of the fruit (Petitpierre 1984). Because of the small kernel, 60-95% of the fruit consists of pulp (Asiedu 1986). As a result, the oil content of Tenera averages 22.5% of the ffb weight (Spaenhoven 1986). Macrocraxia has a shell 6-8 mm thick and it is not of economic interest (French Ministry of External Relations 1984).

Not all of the wild palm in Cameroon is Dura. Ordinary wild palm in West Africa has an oil content similar to that of ordinary Dura (Hadley and Hadley 1986). Occasionally, wild strains may spontaneously hybridize, and these can have an oil content as high as 20% of the ffb weight (Spaenhoven 1986).

These varieties are further subdivided by color. The Nigrescens variety is violet to black before it is ripe and develops a brown or black cap as it matures. Virescens is green before ripening to red or orange. Albescens does not turn red and has a lower carotene content than the others. Most of the plantation Tenera is Nigrescens.

In West Africa, Dura typically yields 3.0 t of ffb per ha, compared to 9.0 t of ffb per ha for Tenera (Hadcock 1984) and 1.0-1.5 t of ffb per ha for mixed semiwild stands of Dura and unnamed varieties (APICA/GATE 1983; Moll 1987). The average yield for semiwild stands that have been improved by filling in spaces with Tenera ("enrichment planting") would be around 2.6t/ha (FAO Investment Centre/IBRD 1986). At these yields, the quantity of oil that could be obtained per hectare is 0.4 t from Dura, 2.02 t from Tenera, and 0.05-0.19 t from semiwild trees. In practice, actual yields are considerably lower than the theoretical yields because of the limitations of the extraction technology.

Oil palm yields vary with the climatic conditions, density of trees, use of fertilizer and other cultivation techniques, and the age of the trees. In 1982, average yields for producing Tenera plantations in t of ffb per ha were 17.8 in Malaysia, 17.5 in Indonesia, 15.4 in Colombia, 8.9 in Cameroon, and 8.4 in the Ivory Coast. High quality sites in Malaysia yield 24 t/ha and a yield as high as 32.6 t/ha has been reported. Average ffb yields for smallholders in Cameroon range from 6.4-10.2 t/ha, depending on the intensiveness of cultivation (FAO/Investment Centre/IBRD 1986), while mature industrial plantations achieve 9-15 t/ha (Younoussi 1985). Additional sites with conditions allowing

yields exceeding 13 t/ha are largely unavailable in Cameroon (FAO Investment Centre/IBRD 1986). Yields are relatively low in Cameroon because of the seasonality of rainfall and the low intensity of management. For example, plantations there use an average of 125 kg of fertilizer per ha, compared to 760 kg/ha in Malaysia (Moll 1987).

Even though the kernels are much smaller in Tenera than Dura, Tenera produces so much more fruit that it can yield double the weight of kernels (Onochie 1982). At Tenera plantations in 1982, the average yield of kernels in t per ha was 0.9 in Malaysia, 0.6 in Indonesia, 0.7 in Colombia, 0.3 in Cameroon, and 0.4 in the Ivory Coast (Moll 1987).

The variety of palm used affects the choice of pressing technology in two ways. First, it affects the profitability of oil extraction, which can determine the capital costs that an enterprise is willing to invest. Second, the relative extraction efficiency of different types of presses may change with the proportion of pulp and kernel in the fruit pressed. The ratio of pulp to kernel is low for Dura and high for Tenera.

Establishment and Growth of Oil Palm

For most small farmers, semiwild oil palm is a crop that provides supplementary income without taking up too much time. Little or no cultivation is done except for some clearing of brush around the trees. Some farmers may water the trees in the dry season. Most of the labor is in harvesting and processing of the palm fruits. The trees are long-lived and propagate naturally. Semiwild stands usually contain 50-75 trees/ha (Moll 1987; Moutsi 1987).

Plantations of improved varieties require considerable effort in establishment and also maintenance in the early years. In West Africa, the spacing for plantation Tenera is 140-145 trees/ha (Moutsi 1987).

Tenera may begin bearing after 4-5 years, but take 10 years to reach maximum production (Moll 1987). Dura may take 7 years to bear (Onochie 1982). As Tenera plantations age, the the number of bearing trees per ha may fall and the number of bunches per palm declines. However, the average weight of a bunch and the oil content increase with age for the first 10 years and then level off. The combined effect leads to a rapid increase in yields from years 4 to 10 followed by a gradual decline to 60-80% of the peak by year 25 (Moll 1987). At age 4, a smallholder plantation of Tenera in Cameroon yields 2 t of ffb per ha. The yield rises to 4 t/ha at age 6, and around 10 t/ha after 8-10 years (Egli 1987). The economic life of a plantation is 25-30 years (Tjeng and Olie 1978).

Harvesting and Storage of Palm Fruits

Palm yields are less seasonal than many other crops (FAO

1982). The peak harvests in Ndian, Cameroon are March to May and October to November (Langley 1982). During the peak month, 15% of annual production may be harvested. It takes 5-6 months from flowering to harvesting of palm fruits. Individual fruits on the same bunch may vary in maturity by 15 days. Detached fruits acidify rapidly, but there is also a tradeoff between acidity and oil content as the rest of the fruits mature. Thus, the best time to harvest a bunch is when 5-10 fruits have spontaneously fallen off (French Ministry of External Relations 1984).

A bunch may contain 500-2,000 fruits, each weighing 3-30 grams (Moll 1987). Because of the difference in weight across varieties, the drums used for collecting palm fruits in Cameroon hold an average of 154 kg of Tenera or 185-190 kg of semiwild fruits (Moutsi 1987).

In addition to the difference in productivity, harvesting difficulties are an important motivation for switching from Dura and semiwild stands to Tenera. Tenera is a dwarf tree that can be harvested by using a sickle hook attached to a pole (La Merre 1971). The other varieties are tall and can only be harvested by climbing. Workers often climb with the aid of a hoop and cut the bunches with a hatchet or machete (Langley 1982). Climbing these trees is dangerous, particularly when they are wet and slippery or workers are intoxicated (Puga and Ngankam 1983).

Rapid processing of the fruits is important because their quality deteriorates rapidly, due to ffb buildup (figure 4). Yet, the traditional process is slow and industrial-scale mills may face delays and high costs in collection and transport of fruits before processing. Also, transportation costs are high because palm fruits are a bulky raw material. Consequently, artisanal production near the harvest site using a press that combines depulping and pressing for rapid processing has advantages.

Current Supply of Palm and Palm Kernel Oils

World Production

Oil palm was spread by man from West Africa to Central and Southern Africa. It was brought to Brazil in the 16th century and as an ornamental to Southeast Asia in the 18th century. The first commercial plantings for edible oil in Asia were in Sumatra in 1911 and Malaysia in 1917. Climatic conditions, particularly the even distribution of rainfall, are more favorable for oil palm in Malaysia and Indonesia than its native lands. A different species, Elaeis oleifera is native to Central and South America, but it is not of major economic importance (Moll 1987), although it can be hybridized with E. guineensis to produce palm oil with a higher proportion of unsaturated fat (Cornelius 1977). Palm kernel production in Central and South America is from E. guineensis, Orbignya babassu, and O. cohune (Moll 1987).

Palm yields normally vary as much as 10% from year to year due to weather (Moll 1987). World production of palm oil increased over 350% between 1961-63 and 1981-83, with the largest

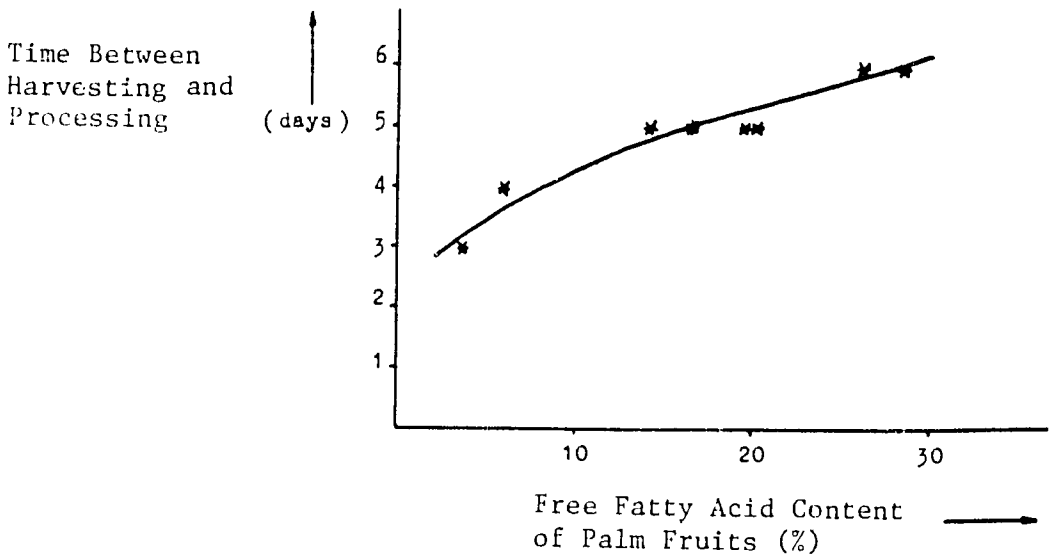

Figure 4. Relationship Between Free Fatty Acid Content (%) in Palm Oil and Time Between Harvesting and Processing of the Fruit

Source: Merx 1982.

increase during the 1970s (table 2). Similarly, palm kernel production went up 100% during this period (table 3). For both palm oil and kernels, the dramatic increase in production took place in Malaysia and Indonesia while African countries showed only a modest increase. As a result, Asia now accounts for nearly three-quarters of world production of oil palm products, about the same share that Africa had in 1965 (IBRD 1986). Until 1960, Zaire was the major commercial producer of oil palm products, but the industry declined due to political conditions and lack of replanting (Commodities and Trade Division 1984). Most of the production in Zaire and Guinea is from semiwild varieties.

Table 4 shows projected world palm oil production in 1990 and the year 2000. An increase of nearly 75% in world production between 1985-87 and the year 2000 is expected, largely from Asia. Continued growth of Malaysian production through the year 2000 is projected, but at a slower rate. Malaysia still has land available for expansion and further yield increases from cloned varieties are anticipated (Ender 1985). The African growth rate is difficult to predict because of uncertainty about artisanal production. For example, the FAO estimate of Nigerian production is over one-third higher than the USDA estimate. Equatorial Africa has 4 million ha of semiwild palm and only a small portion of that is harvested; in addition, there are 600,000 ha of plantation Tenera (Otto 1987). Although the Philippines, Thailand, India, Colombia, Brazil, and China are increasing cultivation of oil palm, none of them will have a significant share of world output by the year 2000 (IBRD 1986).

Cameroon

Cameroon is the fourth largest producer of palm oil in Africa, after Nigeria, Ivory Coast, and Zaire. However, Cameroon's share of world production is very small, 1.6% in 1986. Oil palm products constitute a small share of total value added in the economy, 0.9% of GDP for 1981-83 (Moll 1987). Nevertheless, palm oil comprises over four-fifths of crude edible oil production in the country; the rest is mainly cottonseed and groundnut oils (Mimba 1987).

In 1986, industrial production of crude palm oil amounted to 95,000 t (Mfoula 1987; Mimba 1987). Between 1982 and 1986, industrial production of palm oil rose 30%. Artisanal production is more difficult to determine, but has been estimated at 28,000-32,000 t (FAO Investment Centre/IBRD 1986; Moll 1987). The total volume of palm kernels marketed in 1982 was 46,000 t and nearly three-quarters of this was crushed domestically (Moll 1987).

In 1986, Cameroon had 59,384 ha of productive Tenera plantations. Of this amount, 62.2% was owned by parastatals, 27.3% by private firms, and 10.5% by smallholders (FAO Investment Centre/IBRD 1986). Semiwild palms may occupy as much as 385,000 ha of land (Country Report: Cameroon 1984), but only about 100,000 ha of this is now harvested (Moll 1987).

TABLE 2
Average World Production of Palm Oil (1,000 t)

Region	1961-63[a]	1971-73[a]	1981-83[a]	1985-87[b]
Africa	1,011	1,278	1,372	-
Asia	255	1,035	4,184	-
Central and South America	28	91	229	-
World	1,294	2,407	5,874	8,000

Sources: a) Moll 1987; b) Foreign Agricultural Service 1987.

TABLE 3
Average World Production of Palm Kernels (1,000 t)

Region	1961-63[a]	1971-7[illegible]	1981-83[a]	1985-87[b]
Africa	778	861	739	-
Asia	62	220	984	-
Central and South America	194	262	320	-
World	1,034	1,343	2,074	2,520

Sources: a) Moll 1987; b) Foreign Agricultural Service 1987.

TABLE 4
Projected World Palm Oil Production

Region	1990	2000	% Annual Change 1985-2000
Africa	1,465	1,565	0.5
Asia	7,650	11,405	4.7
Central and South America	450	780	5.5
World	9,565	13,975	4.2

Source: IBRD 1986.

A. Industrial-Scale Production

Industrial-scale production of palm oil and palm kernels began in Cameroon at the end of the 19th century. The first oil palm plantation was started between 1928 and 1933 at Ndian near Lobe. After WWII, Pamol (Unilever) expanded operations. The Cameroon Development Corporation (CDC) began in 1947, taking over former German plantations of cocoa and rubber, and palm became a major crop. SOCAPALM, the Societe Camerounaise de Palmeraies, was established in 1968 with plantations southeast of Douala (Moll 1987). CDC and SOCAPALM are parastatals. The private companies involved in palm oil production in Cameroon are Safa-Cameroon (SAFACAM), the Societe des Palmeraies de la Ferme Suisse (SPFS), and the Societe Plantations Pamol du Cameroun (PAMOL--Unilever). The Societe Huilerie-Raffinerie du Cameroun (HURACA) only does refining of palm oil. In 1986, crude palm oil production was 48,784 t at SOCAPALM (Mfoula 1987), and 28,210 t at CDC (Mimba 1987). In 1984-85, palm oil production amounted to 15,330 t at PAMOL, 4,350 t at SAFACAM, 3,650 t at various medium-scale enterprises, and 2,275 t at SPFS (Hornus, Kamga, and Chaillard 1987). Thus, the three largest firms account for 90% of production.

In 1986, the area of company-owned plantations was 21,438 ha at SOCAPALM, 15,520 ha at CDC, 9,785 ha at PAMOL, 3,202 ha at SAFACAM, 2,500 ha at SPFS, and 720 ha at Mukete (Hornus, Kamga, and Chaillard 1987). The three largest companies controlled 88% of the land area of industrial plantations. In addition, they contracted with smallholders for 6,219 ha of oil palm (FAO Investment Centre/IBRD 1986). Yields are expected to increase at the SOCAPALM plantations because many are still young (Mfoula 1987). The CDC plantations have stable yields, but the company is reducing the area of its own plantations (Mimba 1987).

Three-fifths of the SOCAPALM plantations are in the Littoral Province, over one-quarter are in the Southern Province, and the rest in the Center Province. CDC and PAMOL plantations are located in the Southwest Province, and the SAFACAM and SPFS plantations can be found in the Littoral Province (Younoussi 1985). The estates have had trouble keeping their labor force (Moll 1987). The large-scale mills are located in palm-growing areas along the coast for proximity to ports or near urban centers of demand. The top two producers of palm kernels in 1986 were SOCAPALM at 6,100 t (Mfoula 1987) and CDC at 5,216 t (Mimba 1987). In 1984-85, PAMOL produced 3,650 t of kernels, SAFACAM 890 t, Mukete 730 t, and SPFS 450 t (Hornus, Kamga, and Chaillard 1987).

In 1984-85, 1,400 smallholders with 3,603 ha of oil palm were under contract with SOCAPALM. CDC had 160 contract growers with 467 ha and PAMOL had contracts for 2,149 hectares. The average participant in SOCAPALM's smallholder program had 2.5 ha of Tenera, although the program objective was 4 ha per participant (Moll 1987). CDC's supervised contract scheme is limited to smallholders within a 20 km radius of the mill, unlike some of the other programs, but the company also buys as much

Tenera as more distant smallholders offer. PAMOL's contract smallholder plantations established around 1960 are now reaching the end of their productive lives (FAO Investment Centre/IBRD 1986).

SOCAPALM's contract growers receive a subsidy covering 40% of the wage costs for the labor required up to the 5th year. They are also eligible for a loan for the costs of the non-labor inputs. The long-term credit from FONADER carries an interest rate of 11.25% per year and repayments begin in year 6 and continue through year 12 (Younoussi 1985). SOCAPALM deducts the loan repayments from the farmer's revenues. When production begins, the farmers can obtain short-term credit for 6 months or medium-term credit for 5 years at an interest rate of 9.25%. PAMOL did not provide other services to smallholders other than seedlings of improved varieties (FAO Investment Centre/IBRD 1986).

Large-scale palm oil mills conventionally operate on double or triple shifts. Thus, an industrial mill with a capacity of 5 t of ffb per hour can serve an area of 1,670 ha of cultivated Tenera, assuming that the peak monthly yield is 15% of the annual harvest. As this relationship is linear, each 1 t/h increment to capacity can process the harvest of 333 ha (Blaak 1984a). At a more realistic capacity use rate, a 6 t/h plant would serve 1,000-1,500 ha of plantations. Since village mills are usually operated on single shifts for around 2,000 hours/year, a village mill with a capacity of 0.75 t/hour would process the output from 100-150 ha of Tenera plantations (Moll 1987).

Currently, 11 large-scale mills with a total capacity of 250 t/hour are operating, along with 4 village-scale mills (table 5). The installed capacity at the large-scale mills is much greater than production. Assuming operation for 300 days per year on triple shifts with an oil extraction rate of 21% of the ffb weight, the four largest producers have a total capacity of 408,000 t of oil per year. The total capacity use rate is only 24% for the industry as a whole. For the two largest producers, SOCAPALM and CDC, it is 24% and 27%, respectively.

Reasons for the low capacity use include low world market prices, domestic transportation and sales problems, and government price controls. Production costs for palm fruit and oil are also high for large-scale mills due to financial and management problems.

At present, there is one palm oil refinery in Cameroon owned by the Huraca Company (FAO Investment Centre/IBRD 1986). Most of the product of large-scale firms in the country is consumed in crude form.

Village-scale mills face the same problems and additional ones such as poorer infrastructure, difficulties in obtaining financing, management, and training of workers (Country Report: Cameroon 1984). For the Teze village mill, farmers have to walk 20-30 minutes along steep slopes to reach the collection points.

TABLE 5
Major Oil Mills in Cameroon[a]

	Site	Production Capacity (t of ffb/hr)	Date of Establishment	Press Manufacturer
SOCAPALM				
	Dibombari	40	1948	de Wecker
	Kiribi	20[b]	1949, 1974	Stork
	Mbongo	40	1974	Speichim
	Eseka	12	1975	de Wecker
	Kienke	20	--	de Wecker
CDC				
	Mondoni	48	1972	de Wecker
	Idenau	20	1955, 1984	de Wecker
PAMOL				
	N'dian	18	1935	de Wecker
	Lobe	12	1967	de Wecker/ Colin
SAFACAM				
	Dizangue	20	1981	Speichim

[a]Data were unavailable for the SPFS industrial mill. In addition, there are village-scale mills with an approximate capacity of 1 t of ffb/hour each at Bongungo (Mbonge, Southwest Province), Illuani (Mbonge, Southwest Province), Nchang (Mamfe, Southwest Province), and Teze (Northwest Province).

[b] Can expand to 40.

Sources: Country Report: Cameroon 1984; Mfoula 1987; Mimba 1987; APICA files.

B. Artisanal-Scale Production

Artisanal production provides around one-quarter of the country's supply of palm oil. Most of the artisanal production comes from semiwild groves. Significant areas of these groves are found in the Northwest, Centre-South and Littoral Provinces (ECA 1983). Palm fruits are only collected from about one-quarter of the extensive area of semiwild trees due to the difficulties of harvesting Dura. Some of the rest is tapped for palm wine.

In addition, there are 2,000-3,000 ha of smallholder Tenera plantations that are not tied by contract to large-scale industry, often because of their distance from the mills. Many of these artisanal producers have access to an old Colin expeller and sell oil for the rural market. A majority of these independent smallholder plantations carry a legal land title (GRET 1986). Usually, smallholder Tenera plantations are less than 2 ha in size because the work is difficult with traditional tools (FAO Investment Centre/IBRD 1986). Where does the artisanal oil end up? In 1981-82, 38% was sold directly by the producers, 34% was consumed by relatives of the farmers or workers, and 29% was distributed by the commercial sector or cooperatives (GRET 1986).

The artisanal sector offers important advantages in meeting the rural supply. First, rural consumers prefer the taste of local oil with a high FFA content over industrial-quality oil. Second, production costs are low for artisans due to the relatively inexpensive source of palm fruits and low costs for equipment. Even though the yields per bunch are low, it does not matter because the fruits are not scarce. Unskilled household labor time is the main input. Third, artisanal production has been more stable than industrial-scale production from year to year. Fourth and most importantly, the industrial product often does not reach remote rural areas. When it is available, the industrial product sells for a higher retail price in rural areas than in urban areas because of high transportation costs and a lower volume of purchases.

Current and Future Demand for Palm and Palm Kernel Oils

World

Over the past 25 years, palm oil producers have benefited from a general increase in the demand for vegetable oils. In fact, consumption of vegetable oils is growing fastest in LDC. The LDC share of total vegetable oil consumption was 60.4% in 1984 and may reach 67.7% in the year 2000 (IBRD 1986). Palm oil consumption has risen at a faster rate than other vegetable oils. Between 1961-63 and 1981-83, world consumption of palm oil went up an average of 8.4% per year, twice as much as vegetable oils as a whole (Moll 1987). In volume terms, the consumption of palm oil overtook cottonseed, groundnut, rapeseed, and sunflowerseed

oils in the 1970s, and tallow and butter in 1982 (Commodities and Trade Division 1984). Palm oil's share of total vegetable oil consumption was 12% in 1984 and is projected at 15% in the year 2000 (IBRD 1987).

According to IBRD projections, world consumption of palm oil may increase 86% between 1985 and the year 2000. At present, over 82% of palm oil production is consumed in developing countries, and the proportion is expected to increase slightly by the year 2000. Nigeria, Indonesia, India, and Malaysia are the countries consuming the most palm oil, and except for India these are also important producers (table 6).

The factors affecting the demand for palm oil are population growth and increasing per capita consumption. Under the medium growth scenario, world population in the year 2000 would reach 6,121,813,000 including 4,845,166,000 in LDCs (United Nations 1986). This would represent an average annual growth rate of 1.6% worldwide and 1.9% in LDCs.

Per capita consumption of fats and oils depends on the current diet, income elasticity of demand, and income growth over time. In 1980, per capita consumption of edible oils and fats was 13.95 kg worldwide, a substantial increase over the 4 kg level of two decades earlier. However, the world average remains far below the 23-26 kg per capita found in most industrial countries other than Japan, which is just 14 kg per capita (Bek-Nielsen 1983). Vegetable oils comprise a major share of total edible oils and fat consumption in Africa. In oil equivalent terms, per capita consumption of vegetable oils in Africa was 9.3 kg in 1985 and is projected to be 11.5 kg in the year 2000. Per capita consumption of vegetable oils is less in Asia than in Africa due to particularly low consumption rates in China, India, and Pakistan (IBRD 1986).

Because of the substitutability of various vegetable oils, the share of palm oil in total vegetable oil consumption depends on their relative prices. In the medium term, the supply of palm oil is more fixed than most oilseeds. The reason for this is that palm oil is a perennial crop with a long lag time between planting and a bearing period of 25-30 years, while most oilseeds are annual crops with a more elastic supply.

Cameroon

Per capita household consumption of palm oil in Cameroon was 9.94 kg/year in 1985 and has been projected to increase to 10.75 kg/year in the year 2000. During the early 1980s, palm oil consumption in Cameroon was increasing 4.4% per year and 20% of the growth was in the two largest cities, Yaounde and Douala (Anonymous 1982). In 1985, refined oil amounted to 88% of household consumption, but this may reach nearly 91% at the end of the period. In addition, per capita household consumption of palm kernel oil was virtually zero in 1985, and is projected to be 1.125 kg in the year 2000 (FAO Investment Centre/IBRD 1986).

Domestic consumption of palm oil was approximately 117,000 t

TABLE 6
Historical and Projected Consumption of Palm Oil (thousand tonnes)

Region	1969-71	1979-81	1985	1990	2000
Industrial	653	987	1,022	1,197	1,440
N. America	94	146	184	218	270
United States	80	128	169	200	248
EEC-10	501	636	616	711	841
United Kingdom	175	191	185	211	246
Germany, F.R.	128	145	132	152	176
Netherlands	72	112	97	116	141
Centrally Planned	8	137	297	353	435
Developing	1,383	3,796	6,181	8,015	12,100
Asia	267	2,152	3,979	5,112	7,509
China	114	231	284	398	550
India	0	525	668	840	1,213
Indonesia	35	360	894	1,038	1,408
Iraq	78	134	224	284	458
Malaysia	15	427	416	582	908
Africa	1,012	1,429	1,859	2,445	3,932
Nigeria	575	723	959	1,213	1,966
Zaire	111	162	157	210	334
Central and S. America	83	181	285	380	550
World	2,043	4,920	7,500	9,565	13,975

Source: IBRD 1986.

in 1986. Future projections of demand vary considerably. The 6th Five Year Plan, for 1986-91, was based on an estimated domestic demand of 200,000 t in the year 2000 (Younoussi 1985). CDC (1983) estimates of current and future demand are lower than those listed above, 100,000 t and 160,000 t, respectively. The sources of the demand may also change from 47% urban, 28% rural, and 25% industrial to 57% urban, 26% rural, and 17% industrial (CDC 1983). GRET (1986) estimated year 2000 household demand at 119,190 t and industrial demand at 27,300-45,292 t, for a total of roughly 146,500-164,500 tonnes. This was based on an assumed population of 13.7 million in that year.

Another estimate put total domestic consumption at 135,000 t in 1985. This study assumed a higher population, 15.15 million, for the year 2000 leading to a projected demand of 238,000 tonnes. Over that time period, the household share is expected to increase from 73.6% to 75.6% of total demand, while the share of the food industry would decline from 6.7% to 6.3% and the share of the soapmaking industry would fall from 19.8% to 18.1%. Nearly all of the oil consumed by the restaurant and food industry in 1985 was crude oil, but the demand for refined oil would be nearly 30% of the consumption of palm oil in this sector by the year 2000 (FAO Investment Centre/IBRD 1986).

Existing plantations can meet the domestic demand through the early 1990s, but new plantings will be needed under all of the above demand forecasts after that as the total harvest from existing industrial plantations levels off. With replanting of existing plantations, the total output of palm oil from large mills will only be 1.5% greater in the season 2000-2001 than in 1984-85. In fact, because of the time lags before young stands bear, CDC and SOCAPALM would actually be producing less at the end of that period than at the beginning (table 7). CDC (1983) saw a demand shortfall of 48,400 t in the year 2000. As a result, per capita consumption would either have to decline or be maintained through imports or expansion of artisanal production.

Financing has been arranged for a small amount of additional plantings: 1,130 ha by SAFACAM, 760 ha by PAMOL, 300 ha by SPFS, and 550 ha by Mukete. SOCAPALM and CDC have arranged about 1,000 ha of new plantations by contract smallholders (FAO Investment Centre/IBRD 1986).

There are six main alternatives for organizing the needed increase in production: (1) establishment of new plantations of contract growers, (2) distribution of seedlings to improve semi-wild stands for artisanal producers, (3) clearing of forest land for larger blocks of small plantations, with or without interplanting of other crops, (4) creation of medium-scale enterprises for intensive management of new plantations, (5) intensive colonization of forest land through an agro-industrial complex, and (6) intensive colonization combined with food crop production (Ibid.). Land and labor availability are the principal constraints to expanded production.

The large companies can minimize their capital costs by a greater reliance on contract growers. However, the contract programs are not always beneficial to smallholders. Many

TABLE 7
Production Forecast for Industrial Palm Oil, for the Season 2000-2001

Company	Fresh Fruit Bunches (t)	Palm Oil (t)	% Change For Oil Over 1984-85	Kernels (t)	% Change For Kernels Over 1984-85
CDC	75,450	15,470	- 35	3,020	- 25
PAMOL	110,250	23,150	+ 51	5,500	+ 50
SOCAPALM	108,120	22,700	- 31	4,325	- 34
SAFACAM	37,350	7,650	+ 76	1,550	+ 74
SPFS	27,500	5,900	+ 159	1,180	+ 162
Others	43,890	8,775	+ 140	1,755	+ 140
Total	402,560	83,645	+ 1.5	17,330	+ 6.0

Source: Hornus, Kamga, and Chaillard 1987.

potential participants are middle-aged landowners who are not interested in deferring returns for the long term. Frequently, the plantings are dispersed within a farm and there is minimal use of labor and fertilizer. As a result, the yields often are as low as 6.4 t of ffb/hectare. Given the current prices paid for fruit, the net returns to contract growers are marginal. One estimate valuing household labor at the market wage showed returns of 0.9% per year. Without imputing a value for labor time, the returns were still only 5.7%. As a result, there is a high rate of contract farmers dropping out of the programs. For yields to increase, companies would have to provide more technical assistance (Ibid.).

The companies have also had problems with smallholder programs. The complementary investments incurred by the companies in equipment, transport, and quality control have proved burdensome given the low production rate. The distance between farms and political pressures to expand participation beyond a 25-km radius of the mill led to high transport costs for the companies. At present, CDC buys all suitable Tenera offered by smallholders within 30 km of a mill (Mimba 1987). PAMOL found it was only economical to buy palm fruits at the factory gate.

In fact, it has been suggested that companies eliminate contracts with smallholders beyond the economic distance for transport of palm fruits. If contract growing arrangements were cancelled, it could stimulate the demand for small-scale, low-cost pressing equipment. Many smallholders with Tenera plantations also have access to semiwild palm, which could increase the capacity use rate for the equipment. However, as long as the contracts are effective, many farmers will resist giving up the security these arrangements provide, even if there is a potential for a higher income on their own. They may be concerned about the risks of making the capital investment for equipment, supervising labor for processing, quality control in palm oil production, or difficulties in marketing the product.

The future of artisanal production over the next 20 years appears assured even though one government-funded study (SODECI-Terres Rouges 1985) asserted that artisanal palm oil production was in the process of disappearing. Others believe that artisanal production will be increasingly more important as the gap between industrial-scale production and demand grows (FAO Investment Centre/IBRD 1986; GRET 1986). The large unused area of semiwild trees could support expanded artisanal production if harvesting difficulties can be overcome. Artisanal production also allows relatively rapid expansion of oil for rural markets without a large capital investment or high foreign exchange costs.

Improvement of semiwild palm stands is proceeding gradually; the work of Plan Palmeraies Villageoises, a program of the Catholic mission at Otele, is most noteworthy here. Enrichment planting of one-third of the harvested area of Dura with Tenera could easily allow harvesting of an additional 36,630 t of ffb each year (FAO Investment Centre/IBRD 1986). This could be converted into nearly 6,200 t of palm oil using a manual Colin expeller. The greater ease in harvesting Tenera seems to be as

important a motivation for enrichment planting as the higher yields. The financial returns from enrichment planting of semiwild stands with sale of this fruit to the mills would be moderate, 7.3%, but some of this labor time might otherwise be underutilized. If sales are tied to the large-scale mills, the mills may incur high transport costs or the role of middlemen in distribution of palm fruit may increase. The returns would be higher, 10.6%, if farmers pressed the fruit themselves (Ibid.).

With block plantings of 10-20 ha in privately managed, contract farm plots of at least 2 ha, some economies of scale could be reaped in provision of inputs and services to oil palm growers and transport of the harvest to large-scale mills. It may be difficult to find suitable land for these blocks, especially if the beneficiaries come from other villages. The yields from smallholder blocks could be 8.7 t/ha, which would raise the financial rate of return to 10.2% (Ibid.). Alternatively, if farmer groups could be effectively organized , it would provide an opportunity for a high capacity use rate for small-scale pressing equipment.

Another alternative is to have privately owned, medium-scale plantation enterprises with 50-150 ha of oil palm. These plantations could use intensive cultivation techniques, fertilizer, and herbicides to achieve higher yields, 10.2 t/hectare. The financial returns have been estimated at 11.1% for sale of fruit to large-scale mills and 12.7% for local extraction of the oil (Ibid.).

Colonization of the forest zone with establishment of an agro-industrial complex can have good direct financial returns, 12.3-14.2% (Ibid.). However, that estimate does not take into account the high cost of developing the necessary infrastructure and the risks are high for a large, new facility in an undeveloped area. Colonization is often a slow process and may result in land use conflicts.

The agricultural research stations for palm oil have identified two good sites for new plantings. The first consists of 5,500 ha of flat land southwest of Edea. Due to the shallow water table, this land would require some drainage installations to allow production of 16-18 t of ffb per ha from a high-yield variety. The second site, which is 2,000 ha south of the SOCAPALM plantation at M'Bongo, has a potential yield of 14-15 t/ha (Hornus, Kamga, and Chaillard 1987).

Exports

World

Table 8 lists recent and projected international trade in palm oil. In 1985, 4,915,000 t of palm oil were traded on the world market. Malaysia accounted for 66% and Africa only 1% of the exports. By 1982, most of the Malaysian exports were refined oil. World exports of palm oil grew at an average annual rate of 10.6% between 1961 and 1984. Between 1985 and the year 2000, they are projected to grow at a slower rate, 4.3% per year, to reach 9,180,000 tonnes. However, most of the increase will be

TABLE 8
Historical and Projected International Trade in Palm Oil

	Quantity (1000 Tonnes)					Average Annual Growth Rates (%)	
	1969-71	1979-81	1985	1990	2000	1961-84	1985-2000
A. Gross Exports							
Industrial	37	110	118	185	225	11.1	4.4
EEC-10	36	107	116	177	209	11.1	4.0
Developing	965	3,118	4,797	5,620	8,955	10.5	4.3
Asia	773	2,967	4,580	5,405	8,730	14.6	4.4
Malaysia	444	2,102	3,235	4,230	5,717	18.0	3.9
Indonesia	182	357	450	662	1,890	6.2	10.0
Singapore	147	508	890	485	430	14.6	(-4.7)
Africa	186	95	52	40	40	(-6.4)	(-1.7)
World	1,002	3,228	4,915	5,668	9,180	10.6	4.3
B. Gross Imports							
Industrial	689	1,097	1,140	1,382	1,665	5.5	2.6
N. America	94	146	184	218	270	11.3	2.6
United States	80	128	169	200	248	15.2	2.6
EEC-10	538	744	732	888	1050	3.6	2.4
United Kingdom	175	192	185	211	246	2.6	1.9
Germany, F.R.	133	168	158	180	210	3.1	1.9
Netherlands	99	180	180	220	260	5.7	2.5
Japan	41	143	179	216	266	13.6	2.7
Centrally Planned	8	137	297	353	435	23.6	2.6
Developing	299	1,879	3,478	4,070	7,080	16.0	4.9
Asia	249	1,665	2,859	2,945	4,604	16.7	3.2
Singapore	155	534	900	600	450	14.9	(-4.5)
India	0	525	668	870	1,213	24.9	4.1
Iraq	78	134	224	284	408	9.1	4.1
Pakistan	1	215	416	582	858	67.4	4.9
Africa	24	178	461	1,060	2,407	18.1	11.6

Source: IBRD 1986.

from Malaysia and Indonesia. African exports of palm are expected to decline 1.7% per year because the domestic market is expanding relative to production.

World exports of palm kernels are small, 130,000 t in 1986-87. Most of the palm kernel oil on the world market is produced in Malaysia. Palm kernel oil exports are rising, predominantly for nonfood uses (Foreign Agricultural Service 1987).

Developing countries imported 71% of the palm oil on the world market in 1985. Singapore was the largest single importer although most of this was re-exported. India and Pakistan are large net importers with growing consumption. Import demand is also increasing in Iraq, Saudi Arabia, and the USSR. The EEC is a much larger importer than North America (IBRD 1986). Although palm oil only accounts for 4% of edible oil consumption in the United States, its share is growing ("Malaysia Sees Palm-Oil Sector" 1987). European countries prefer to import crude palm oil because the refining process can be adapted to correct for quality variations (Willems 1985).

Cameroon

Palm oil products constitute a relatively small share of the total value of exports in Cameroon. The country exported 10,000 t of palm oil in 1985-86 (Bradley 1987), which is 10.5% of the industrial-scale production. In 1981-83, 13% of palm kernel production was exported in unprocessed form (Moll 1987). Almost all of the the rest goes into palm kernel oil for export.

Cameroon is only a minor exporter of oil palm products because its production cannot compete well with Southeast Asian exporters and a large domestic demand exists to absorb the output. Total production costs per tonne of product in Cameroon are 86% higher than in Indonesia and 113% more than in Coastal Malaysia due to relatively low yields. However, average production costs in Cameroon are 3% lower than in Colombia, 14% lower than in Ivory Coast, and 23% below those in Honduras (table 9). Local delivery costs are included in the production costs above, but the additional marketing costs for exports are relatively small. The amortization of the fixed costs would vary with the interest rate and depreciation method used. Here, it is based on straight-line depreciation over an expected lifetime of 25 years of production for plantations, 5 years for vehicles, 12.5 years for the mill, and 40 years for buildings (Moll 1987).

.rices of Oil Palm Products

World Market Prices

Palm oil is a medium-valued oil priced similarly to soybean, rapeseed, and sunflowerseed oils. It is generally cheaper than coconut oil. World prices for palm oil vary with the level of industrial and consumer demand, supply of palm oil, price and availability of substitutes, and fluctuations in currency

TABLE 9
Production Costs of Oil Palm Products in Six Countries in 1982
($/tonne)

	Indonesia	Malaysia		Cameroon	Ivory Coast	Colombia	Honduras
		Inland	Coastal				
Operating Cost	198.0	203.8	169.9	327.8	382.8	368.0	472.0
Depreciation							
Field							
Establishment	18.5	18.7[a]	18.7[a]	72.2	54.8	52.5	27.0
Vehicles	4.6	3.7	3.7	9.0	21.6	10.0	6.0
Oilmill	13.8	11.1	11.1	29.0	47.1	23.8	61.0
Buildings	3.1	3.6	3.6	4.8	6.8	4.5	7.0
Subtotal	40.0	37.1	37.1	115.0	130.3	90.8	101.0
Total	238.0	240.9	207.0	442.8	513.0	458.8	573.0
Additional marketing costs for exports	19.3	13.5	13.5	8.2	4.0	--	--

[a] Average cost of estates on inland soils and coastal soils.

Source: Moll 1987.

exchange rates. Nominal prices of vegetable oils have fallen since mid-1985 due to large stocks of palm oil on the world market and declining imports by India and other countries (IBRD 1986). Figure 5 tracks changes in the real price of palm oil between 1948 and 1985, with projections for 1986-2000.

In mid-1987, the c.i.f. price from Cameroon was $284/t (Mimba 1987). The 12-month average f.o.b. price in the United States was $346 in mid-1987, 12% below the previous year's level in nominal terms (Foreign Agricultural Service 1987).

Since palm kernel oil has special uses due to its high lauric acid content, it sells for a higher price than palm oil. However, palm kernel oil receives a lower price than its principal substitute, coconut oil, because its higher FFA content makes it slightly more expensive to process. Unprocessed kernels from Cameroon were exported at a price of $178/t in 1983-84 (FAO Investment Centre/IBRD 1986). The domestic price of palm kernels was CFA 191 in 1982 (Moll 1987).

A drought or severe storm in one major oilseed producing country (e.g. Malaysia or Indonesia for oil palm, the Philippines for coconuts, or the United States for soybeans) can affect the entire market for vegetable oils. Although the real price fluctuations over the past decade have been largest for coconut oil, the pattern is similar for palm and soybean oils (Hyman 1987). The price of palm oil shows a strong correlation to the price of the major edible fats and oils, especially soybean, groundnut, cottonseed, rapeseed oils as well as tallow. Palm kernel oil's price is most affected by the price of coconut and palm oils (table 10).

Domestic Prices in Cameroon and the Effect of Government Policies

Domestic prices for palm oil in Cameroon exceed world market prices. The domestic price in 1983 was $444/t, nearly equal to the production costs of $443/t (Moll 1987). Since 1975, the government has set the wholesale price of industrial-scale palm oil at a level above the world market price, but producers may not charge a higher price than the fixed level. Together with a ban on palm oil imports, this pricing policy allows continued operation of domestic producers whose production costs exceed the delivered price of oil from Malaysia and Indonesia. Some palm oil of Indonesian origin is smuggled in through Nigeria. This oil sells for CFA 275/l in 40 l containers and puts downward pressure on the price of domestically produced oil (Mimba 1987).

At present, the regulated ex factory wholesale price is CFA 295/liter. With the 10.99% sales tax, the ex factory price becomes CFA 327. The costs of containers and transportation may be added to this price. CDC sells palm oil to the soap industry in large volumes at a lower price, CFA 225/kilogram. At Otele, a rural center, middlemen buy palm oil from a small-scale mission enterprise at a price that has ranged from CFA 250/l to CFA 350/l in 1987 (Egli 1987). In the same area, middlemen bought lower-quality oil from artisanal-scale producers in smaller volumes at CFA 175-250/l in 20-l tins, with the middlemen bearing the costs

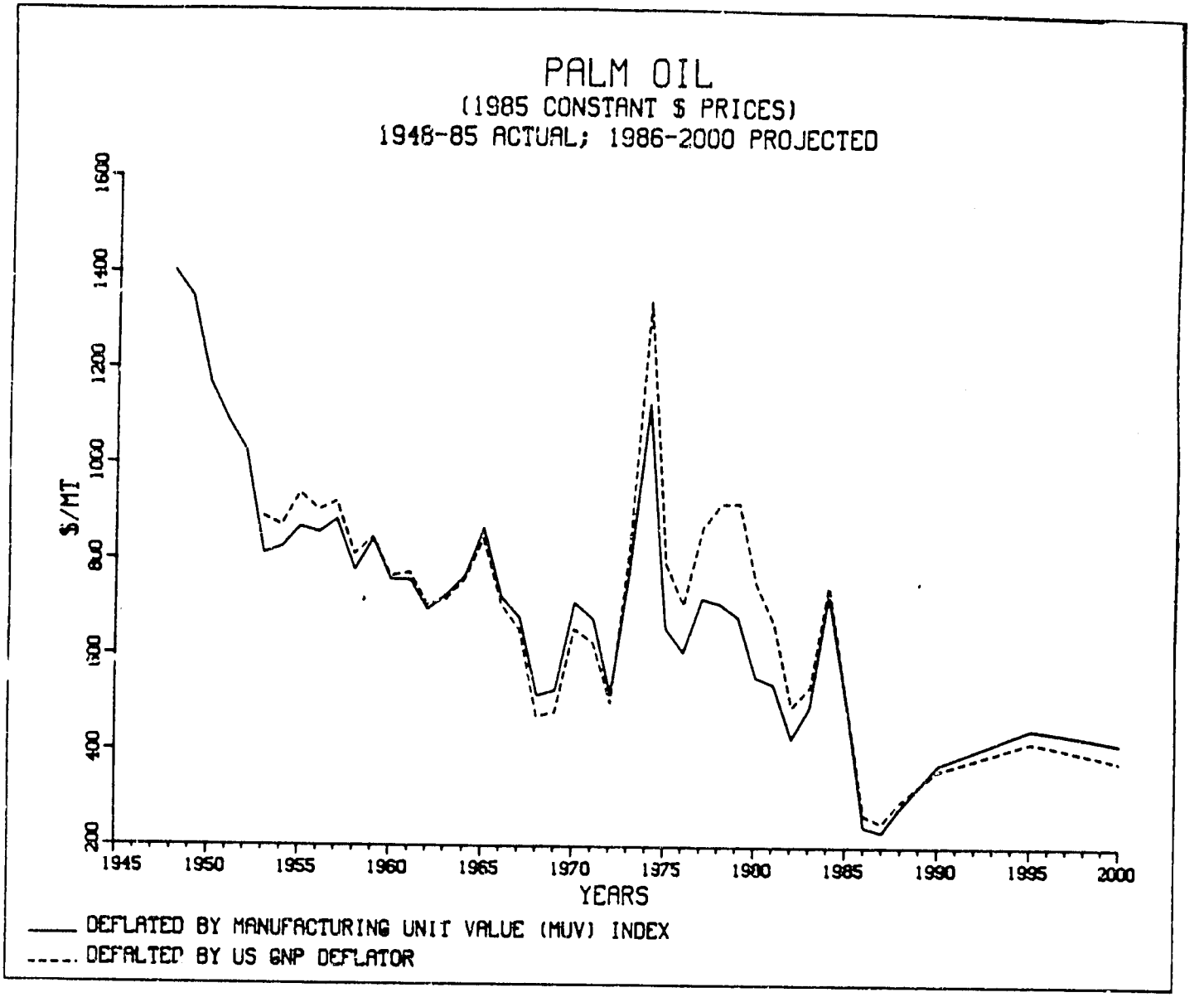

Figure 5. Real Prices of Palm Oil on the World Market

Source: IBRD 1986.

TABLE 10

Correlation Matrix of Prices for Selected Fats and Oils[a]

	SOYBEAN OIL	SUNFLOWER OIL	GROUNDNUT OIL	COTTONSEED OIL	RAPESEED OIL	OLIVE OIL	PALM OIL	COCONUT OIL	PALM KERNEL OIL	FISH OIL	LINSEED OIL	TALLOW
SOYBEAN OIL	1.000											
SUNFLOWER OIL	0.982	1.000										
GROUNDNUT OIL	0.945	0.943	1.000									
COTTONSEED OIL	0.983	0.986	0.939	1.000								
RAPESEED OIL	0.992	0.972	0.944	0.974	1.000							
OLIVE OIL	0.909	0.922	0.944	0.929	0.895	1.000						
PALM OIL	0.974	0.940	0.960	0.952	0.967	0.918	1.000					
COCONUT OIL	0.902	0.835	0.844	0.880	0.871	0.803	0.933	1.000				
PALM KERNEL OIL	0.924	0.866	0.871	0.900	0.894	0.803	0.946	0.993	1.000			
FISH OIL	0.937	0.938	0.923	0.920	0.923	0.893	0.922	0.779	0.828	1.000		
LINSEED OIL	0.898	0.921	0.841	0.920	0.861	0.809	0.847	0.759	0.797	0.865	1.000	
TALLOW	0.924	0.903	0.936	0.926	0.918	0.945	0.968	0.877	0.891	0.918	0.806	1.000

[a]Computed from international market prices for the period 1962-84, except for olive oil (1963-79).

Source: IBRD 1986, from Oil World data.

of containers and transport (Benoit 1987; Yebga 1987). At another location, kilometric point 27 on the Douala-Edea Road, a small producer could sell palm oil at CFA 275/l less CFA 25/l in transport costs (Goueth 1987). Domestic prices for palm oil are higher in other African countries, for example CFA 500-800/l in Equatorial Guinea (Spaenhoven 1986).

In 1987, the industrial estates sold palm kernels domestically to large, industrial soap factories at CFA 50,000/tonne (Mimba 1987). Cameroon used to have a government marketing board for palm kernels, but that has been abolished (Moll 1987). In 1986, artisanal kernel oil for medicinal purposes sold for CFA 800/l (Spaenhoven 1986).

Seasonal variations in palm oil prices are significant and mostly reflect changes in supply. Prices are lowest in the dry season from March to June when palm fruit is easiest to harvest, particularly in April and May (GRET 1986). Palm oil is scarcest in the rainy season from August to December, especially in October and November. Demand is nearly constant year-round, except for an increase around the Christmas and New Year's holidays due to increases in demand (Van Beuningen, Thijsen, and Rijnsburger 1984). Between 1976 and 1982, the average difference between the maximum and minimum monthly prices was 65% (GRET 1986).

Geographic variations in supply are also common due to poor distribution systems and infrastructure. This problem can lead to a 40% difference in price between Douala where large-scale industrial production is easily accessible and some areas in the north where palm oil is not produced. In mid-1987, the retail price was around CFA 350 in urban areas (Mfoula 1987). However, it can reach CFA 800/l in remote areas (GRET 1986). Small palm oil producers who have access to vehicles have an opportunity to earn much larger profits. For example, one producer at Otele distributes oil to a poorly served location, Ngonmezap in Nyon-et-Soo Division, at a transport cost of CFA 25/l and sells the oil at CFA 500/l (Ngue 1987).

Government regulation has not been able to control the large retail price increases that take place in times of scarcity. Following a drought, retail prices in Bamenda went from CFA 275/l in mid-1983 to CFA 900 in early 1984 before falling to CFA 350/l later in the year as supplies reached normal levels (Beuningen, Thijsen, and Rijnsburger 1984).

Cameroon levies a 35% tax on the profits of large- and medium-scale, formal sector firms. Artisanal-scale, informal sector producers or service pressing enterprises do not pay the corporate income tax. Exporters also pay a duty based on a fixed "mercurial value", which equals CFA 50,000/t of palm oil or kernels. The export duty is 9.5% of the mercurial value for palm oil and 10.8% for palm kernels (Moll 1987). In 1986, artisanal kernel oil for medicinal purposes sold for CFA 800/l (Spaenhoven 1986).

Import prohibitions and the government-set price floor boost the price that mills are able to pay oil palm producers above what they would be in an open market, but below the level that

would prevail with continued protectionism in the absence of a price ceiling. In mid-1987, CDC and SOCAPALM paid CFA 27/kg for ffb delivered to the factory, and CDC paid only CFA 23/kg if it handled transport. CDC bought palm kernels at CFA 25/kg (Mimba 1987). The village mill at Teze paid smallholders the following prices for palm fruits in 1984: CFA 16 for Dura ffb, CFA 26 for stripped Dura, CFA 24 for Tenera bunches, and CFA 40 for stripped Tenera. Suppliers of fruit to the mill also received a discount of CFA 10 on the price of oil from the mill, which was CFA 270/l at the time (van Beuningen, Thijsen, and Rijnsburger 1984).

Small farmers who do not have their own oil presses also have the option of purchasing pressing services. In Cameroon, the usual arrangement is for a farmer to give the press owner one-fifth of the amount of oil pressed. The farmer also provides the labor for hand pressing or pays the fuel cost for a motorized press. The value of this in-kind payment for pressing services is much higher than the cash cost of pressing services in the Ivory Coast (ECA 1983).

PART II: DESCRIPTION AND APPROPRIATENESS OF PROCESSING TECHNOLOGIES

Origin and Objectives of the ATI Project

The traditional process of palm oil extraction by foot stomping is laborious and yields a low percentage of the oil contained in the palm fruit. In Cameroon, the traditional process is still used in parts of the Centre-South province [Makak, Mafous, Nyong, and Kelle districts], the Northwest province [Mom district], and the Southwest province [Buea district] (ECA 1983). It is mainly carried out during part of the dry season, December to February. To the extent that artisans upgrade their technology from the traditional process to simple pressing equipment, rural incomes can be increased, labor drudgery reduced, and consumer benefits obtained from an increased supply of palm oil.

However, most artisanal-scale palm oil producers in Cameroon have access to an old Colin expeller, a small, manually operated device. The Colin was imported to Cameroon between the 1930s and 1973. Regular manufacturing of this expeller ended in 1961, but special orders were accepted. In 1982, GATE financed a census of the Colin expellers in Cameroon and their condition. GATE counted 230 Colin expellers and estimated that around 400 existed. Most were over 30 years old; the median year of purchase was 1953-54 (APICA/GATE 1983). Many were in disrepair, leading to poor productivity and frequent downtime. Also, replacement parts are no longer available through the Aubery Co. (GRET 1986).

In 1972, the Speichim Co. bought out Colin and stopped routine manufacturing of artisanal-scale expellers. In 1981, the company announced that it would accept special orders for the

Speichim 10000 in a lot of 20 or more. The Speichim 10000 is a modified version of the manual Colin with a capacity of 125 kg of stripped fruit per hour (GRET 1984). However, no traders in Cameroon have been willing to take the risk of placing an order of this size. The Speichim M-10 has a capacity of 300 kg/hour, which is slightly larger than a motorized Colin. Unfortunately, this imported press is too expensive for most palm oil producers in Cameroon. Due to the lack of affordable new equipment for replacement and expansion of small-scale, commercial enterprises, increases in artisanal palm oil production had been limited by a bottleneck in processing capacity.

To remedy these problems, the Association Pour la Promotion des Initiatives Communautaires Africaines (APICA) developed an interest in palm oil extraction technologies. APICA is an international NGO with headquarters in Cameroon and activities in various Central African countries. It is involved in research on improvement of traditional technologies and support of village-level development activities. The Plan Palmeraies Villageoises (PPV) program, which was supporting the planting of improved palm varieties around Otele in Cameroon, suggested that APICA adapt a motorized Speichim expeller for local manufacture, but the design was patented and production costs were considered too high. The Ministry of Planning recommended establishing a repair service for the manual Colins. The Institut Panafricain de Developpement, urged selection of a device that could be adopted to upgrade the traditional process for palm oil production.

APICA sought ATI support for a project on rehabilitation of existing Colin presses and production of auxiliary equipment such as cooking drums, bunch strippers, and clarifiers. An ATI staff member urged APICA to start its own subsidiary for the reconditioning, Outils Pour la Communaute (OPC), and to subcontract for certain parts rather than relying primarily on an existing workshop. In 1984, ATI provided APICA with a three-year grant of CFA 112,600,000 (then U.S. $304,324). This included CFA 55,400,000 for working capital and equipment and CFA 57,200,000 for a revolving loan fund to disseminate the technology.

The original goal of the project was to purchase up to 75 used Colins for reconditioning and sell at least 68 units consisting of the expeller and the auxiliary equipment over three years. The first year goal was 20 units. It was expected that used Colins could be bought at CFA 600,000 and spare parts would cost between CFA 250,000 and 700,000. Materials costs for the bunch stripper and clarifier were estimated at 240,000. Including labor, fixed costs, and a profit margin, the sale price of the complete extraction unit was projected to be CFA 2,600,000.

Initially, the loan fund was to finance the lease/purchase of 25 units and loan repayments would expand this number over the project life. The loans carried a 10% interest rate, which was comparable to a subsidized government rate, and the repayment period was set at 5 years with a 3 month grace period. It was expected that new groups of palm oil producers would be established, and that each group would have an average of 20

members, for a total of 1,360 direct beneficiaries. The loans would be repaid by having group members deposit 25% of the oil extracted from their palm fruits for use of the expeller. After repayment, groups could reduce the fee to members to just cover operating, maintenance, and replacement costs. This method of charging simulates the prevailing 20% in-kind payment for service pressing of oil at privately owned presses. Because it was assumed that the group members would be switching from the traditional method, the estimated benefits were high -- a 25-50% increase in palm oil production with a 50-75% decrease in processing time.

The original design of the project proved unworkable. First, only 12 used Colins were available for purchase at a feasible price because the assumption that a large number of these expellers were unused due to disrepair was incorrect. Local repairmen were available to patch up the expellers and most of the spare parts were being manufactured in workshops around Douala. Even though many Colins had the wrong parts and maintenance difficulties resulted in downtime, they were still usable much of the time. Second, because the cost of repairs done in small batches was high and it took as long as 10 months for OPC to obtain imported replacement parts, the lease/purchase price was too expensive for potential buyers. A decline in world market prices for palm oil also had an effect on the profitability of artisanal expellers because the parastatals shifted more of their production from exports to the domestic market where prices were higher. Consequently, there were only four firm orders in the first year, three from small groups and one from an individual. Third, some individuals expressed more of an interest in obtaining motorized expellers.

Recognition of these problems led to a modification of the project after the first year. ATI and APICA decided that the cost of reconditioning an old expeller was too high relative to the manufacturing of a new one, and that production could proceed more rapidly this way. OPC will still pay CFA 400,000-700,000 for an old Colin for reconditioning and resale. Eventually, market factors showed the desirability of a simpler, less expensive model with fewer imported components, so the horizontal Caltech was developed for the broader market segment. This smaller expeller was based on the design of the Colin, but there was a major change, substitution of a reducer for the gearing that was subject to frequent breakdowns. Later, a far cheaper, vertical-axis Caltech was developed.

With the shift toward manufacturing and a more realistic view of the effective demand for new expellers, the production target was reduced to a total of 35 units, including 9 manual Colins, 12 motorized Colins, 6 manual Caltechs, and 8 motorized Caltechs. The revised target for auxiliary equipment is 23 sets of the bunch stripper and clarifier. Repair services and motorization also were initiated, with a target of 51 minor and 15 major repairs to Colin expellers.

After the reorientation, the project became more successful. By the end of 1987, OPC had sold 8 manual Colins, reconditioned

3 more, and reconditioned 1 and converted it to a motorized unit. It had sold 38 horizontal Caltechs, and 10 more were in production. Also, 7 vertical Caltechs had been produced. Only 10 clarifiers and 11 bunch strippers had been sold (Perry 1987).

Financing played an important role in encouraging sales. APICA/ATI or PPV provided credit for 17 new expellers, 4 others received financing from embassy funds or religious aid, and 1 through a loan from a national development bank, Fonader. Private banks did not provide any of this financing (Laffitte 1987). APICA credit is available for the presses and bunch stripper, with a 10% down payment. A lease-purchase arrangement allows monthly payments over 36-48 months after a 3-month grace period. Upon the last payment, the borrower receives title to the equipment.

The Colin is an accepted technology that is well-proven in Cameroon. The Caltech expellers developed under this project can be more appropriate than the Colin for a smaller scale of artisanal palm oil production. The horizontal Caltechs have been working well to date although the demand is narrower than originally expected. The new vertical Caltech has the potential for much wider application due to its substantially lower cost. At present, domestic purchasers must pay a 10.99% sales tax on equipment sold by OPC, but the firm is seeking special enterprise status that will provide an exemption from sales taxes. OPC provides a one-year warranty on the presses.

Some differences from the original intent remained. The idea of purchaser groups proved unpopular, particularly in Otele where the market has been largest. This area is dominated by the individualistic Bassa tribe and this fact would have been understood if a baseline sociocultural study had been done. The traditional property rights of the Bassas limit the access of the young to land and make it difficult to gain cooperation for repair of a group-owned press. Considerable interest in artisanal-scale expellers exists in Otele because farmers there cannot sell palm fruits to the parastatal oil mills because the distance is too great. Yet, progress has been made in establishing smallholder plantations of improved palm varieties around Otele due to the PPV program. PPV also purchases Caltechs and resells them at an average subsidy of 30% and, in some cases, offers interest-free repayment, usually over 1 year. As of mid-1987, PPV sold 7 manual Caltechs and 6 motorized Caltechs in Otele (Egli 1987). Other areas in the Littoral, Center, and South provinces face similar constraints on collective economic activities; however, various women's groups have been successful in the Northwest, Southwest and Western provinces (Moutsi 1987).

The project's impacts on oil production and labor productivity are less striking than expected because very few commercial palm oil producers in Otele have been using the traditional method as most have access to the services of a Colin expeller. On the positive side, this does mean that possible displacement of women's traditional activities has been minimal.

The next part of this paper discusses the traditional technology for palm oil production, the small-scale expellers

supported by the project, and other alternatives such as screw-operated batch presses, hydraulic presses, and phase separation extractors. Selected alternatives are then compared in an economic analysis.

The Traditional Technology

Two different types of palm oil are produced by informal sector artisans using the traditional process: soft oil and hard oil. Soft oil is liquid at tropical temperatures. It commonly has an FFA content of 7-12% (Moll 1987) . Hard oil is solid at 32°C. It has a sharper taste because its FFA content is usually around 20%, but can be as high as 30-50% (MacFarlane, Swetman, and Coursey 1984; Asiedu 1986; Moll 1987). Depending on local tastes, both types of oil are used in cooking; hard oil is also used in making crude soap. Soft oil with an even lower FFA content can be made by hand squeezing of palm fruits on a kitchen scale for subsistence consumption. Although basically similar, the traditional processes for soft and hard oil production vary across countries in Africa and regions within a country (figure 6).

In West Africa, soft oil production begins with storage of harvested bunches for 2-4 days. The bunches are sprinkled with water and covered with leaves. The second step is to strip the fruits off the bunches and boil them in metal drums for about 4 hours to soften the pulp. Cooking neutralizes enzymes responsible for FFA build-up and loosens the kernels from the pulp. Next, the hot mass is pounded with a wooden mortar and pestle. The resulting pulp is washed in water and the oil skimmed off. The pulp may be squeezed by hand to extract more oil. The kernels may be removed and dried. The oil is cooked to remove water and fibers are skimmed off the top (Moll 1987). This process takes place over 5-7 days (Nwanze 1965).

To produce hard oil, the bunches are stored for 5 or more days. The stripped fruits are placed in pits or a hollowed out tree trunk and covered with leaves for 1-3 days to allow fermentation (figure 7). Fermentation makes the fruits easier to work, but activates enzymes that break down fats into FFA. The fruits are stomped by foot and the oil drained off. Fermentation continues and over the next 3-7 days, the pulp is trampled a second time and sometimes a third time as water is added to facilitate skimming off of the rest of the oil. The oil is then boiled (Moll 1987). In Cameroon, the stripped fruits are cooked before the stomping. The process takes 10-14 days (Nwanze 1965).

Kitchen process oil is prepared 1 day after harvesting. It is squeezed by hand in a bag. The processing time for a small quantity is less than 1 day (Nwanze 1965).

Responsibilities for the traditional process vary locally. In Northwest Cameroon, men are responsible for harvesting, transport, and stripping of the bunches while 3-5 women usually join together for processing the palm fruit. There, one-sixth of the total labor time is men's work and five-sixths is women's

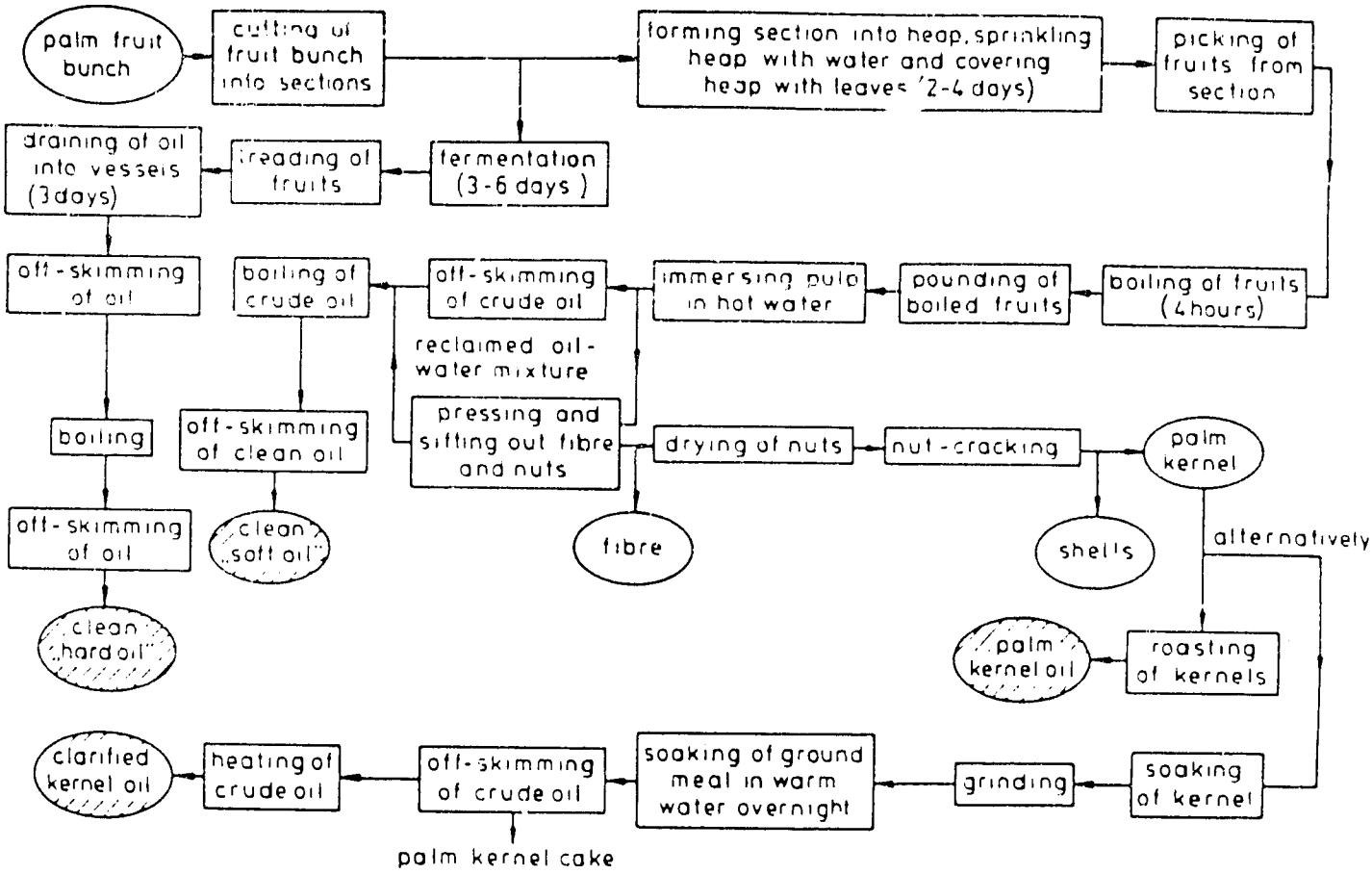

Figure 6. Flowchart for the Traditional Processing of Palm Oil Production

Source: Asiedu 1986.

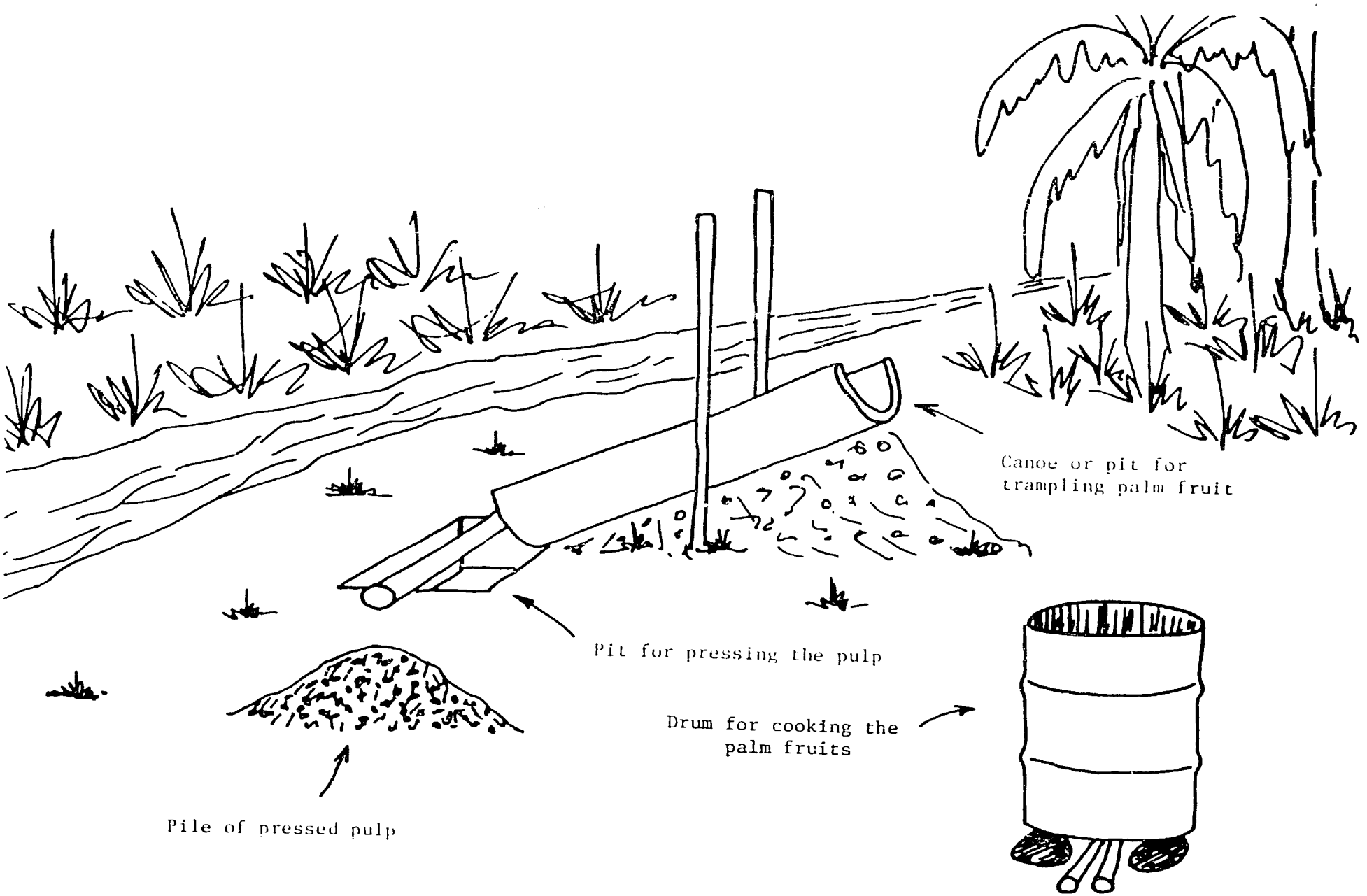

Figure 7. An Installation for the Traditional Process of Palm Oil Production in Cameroon

Source: APICA/GATE 1983.

work. There, the revenues from palm oil are controlled by the men. Around Bamoun in the west, palm oil extraction is one of the few income sources controlled by women, but that is not the case in the Bassa and Ewondo areas of the Centre-South province (GRET 1984).

At Buea in the southwest, the labor requirement for hard oil is reported to be 34 person-hours per drum of 115 kg of stripped fruits, including 8 person-hours for marketing (ECA 1983). A higher estimate has been made for the Otele area in the southwest -- 52 person-hours over a 9-day period for 128 kg of stripped fruit, excluding marketing (table 11). Most farmers in Cameroon using the traditional process do less than ten production cycles per year (ATI 1984).

Even if the palm fruit is cooked in the hard oil process, it only requires half as much labor time as soft oil production, mainly due to lower labor requirements in fruit preparation and extraction. Without a cooking step and the corresponding additional time cost for fuel and water collection, the hard oil process takes only one-third of the labor of soft oil production (Nwanze 1965) requires twice as much labor time as hard oil production due to Generally, the kitchen process is done by women.

Palm oil yields are reported in two ways: extraction rate and efficiency. The extraction rate is the weight of the oil obtained as a percentage of the weight of the ffb (or sometimes, the stripped fruits). The extraction rate is easy to measure, but can be misleading when you are comparing results across processes using a different source of palm fruits because their oil content can vary considerably. Efficiency is the ratio of the weight of oil extracted to the amount of oil contained in the fruits. Since solvent extraction to measure the actual oil content is rarely done in rural areas, a theoretical oil content for the variety is usually assumed.

The extraction rate for the hard oil process at Otele with cooking of fruits has been estimated at 14% of the ffb weight for Dura (APICA/GATE 1983). However, that estimate may be too high (FAO Investment Centre/IBRD 1986). Without cooking of fruits, the extraction rate is much lower, 7.2% for Dura and 13.8% for Tenera (Traut 1982). An even lower extraction rate was noted in Ghana, 4-6% for Dura and 8% for Tenera (Hadley and Hadley 1986). The efficiency of soft oil production has been estimated at 30-50%, somewhat higher than the 20-40% achieved with hard oil production (Nwanze 1965; Moll 1987). The kitchen process has an efficiency of only 20-30% (Nwanze 1965). A 50% efficiency is equivalent to an extraction rate of about 5.5% with Dura and 11% with Tenera.

Most traditional palm oil producers in Cameroon do not bother with palm kernel oil production because they use the kernels as fuel in cooking the palm fruits. Some kernel oil is produced in the Bamoun area for medicinal purposes. The kernels are cooked, pounded with a mortar and pestle, and then cooked again and filtered 5 times for 5 minutes until they turn black and no longer yield oil. The resulting oil is decanted and filtered. In this manner, 75 cl of kernel oil can be obtained from 5 kg of kernels (Langley 1982).

TABLE 11
Labor Requirements for the Traditional Process in Otele, Cameroon

Day	Task	Persons	Person-Hours	Units[a]
1	Brush removal to facilitate harvesting	1	2	7 trees
2	Cutting of bunches	1	4	16 ffb
2	Collection and transport of bunches	1	2	16 ffb
3	Cutting of stalks	1	1	16 ffb
4-6 (7)	Storage of bunches	--	--	16 ffb
6-7	Stripping of fruits	2	21	128 kg fruits
8	Transport of fruits to river	2	3	128 kg fruits
8	Cooking of fruits	1	3	
9	Depulping through stomping	3	5	
9	Washing and skimming of oil, removal of kernels and fibers	2	5	
9	Clarification	1	4	
9	Bottling	1	1	31 kg oil
Total			52	

[a]ffb = fresh fruit bunches

Source: APICA 1982.

Small-Scale Expellers

Small-scale expellers are down-scaled versions of the equipment used by the large palm oil firms. These presses are appropriate as an upgraded technology for artisanal producers operating at a commercial scale. The technology is relatively simple and can produce oil of higher quality than the traditional process. How well the quality compares to that of crude oil from large-scale industry depends heavily on handling and storage of the palm fruits.

An expeller relies on a shaft with a spiral flight ("worm") that turns horizontally or vertically in a cage. As the material fed into the expeller is pushed forward by the worm, the pressures forces oil out through the perforated sides of the cage and the remaining fiber and kernels are released at the end of the cage. The ability to do depulping and pressing simultaneously is a major advantage of this type of press. The disadvantages are capital cost and wear on the shaft and cylinder. Small expellers may be manually operated or motorized; examples include the Colin and the Caltech.

A small expeller should be installed near the source of the fruits to minimize transport costs. Access to sufficient water for cooking is also needed, but water requirements are less than the amount used in the traditional process for making hard oil.

Colin Expeller

The Colin expeller is a low pressure, continuous feed expeller that was made in France. It has two 6"-diameter coaxial counter-rotating screws. This expeller was patented in 1904 (GRET 1986). Schematic drawings of a manual Colin are shown in figures 8 and 9. Figure 10 shows use of this expeller. The mechanized model uses a 5-7 hp motor (Egli 1987). A 5-hp diesel motor costs more than CFA 1,000,000, compared to CFA 500,000 for a gasoline-powered motor and CFA 200,000 for an electric motor (Moutsi 1987). Although the capital costs are lowest for an electric motor, many rural areas where oil palm is grown are not yet electrified. Where electricity is available, it is often expensive or unreliable. The manual Colin has a capacity of 100 kg of stripped fruits per hour and the motorized version can do 250 kg/hour or more. Because of bottlenecks in other stages of processing, these expellers would generally be operated a maximum 4 hours per day (OPC n.d.).

The motorized Colin is too large for an individual smallholder, unless service pressing is also offered. A farmer with 1 ha of mature Tenera trees could process the typical annual yield of 4.95 t of stripped fruit (9 t of ffb) in less than 12.5 workdays with a manual Colin or 5 workdays with a motorized Colin. If a manual Colin were operated 4 h/day for 200 days per year, it could press the harvest of 16.2 ha of Tenera. Similarly, the motorized Colin could serve a planted area of 40.4 ha of Tenera. Because of the lower yields of Dura, it would take

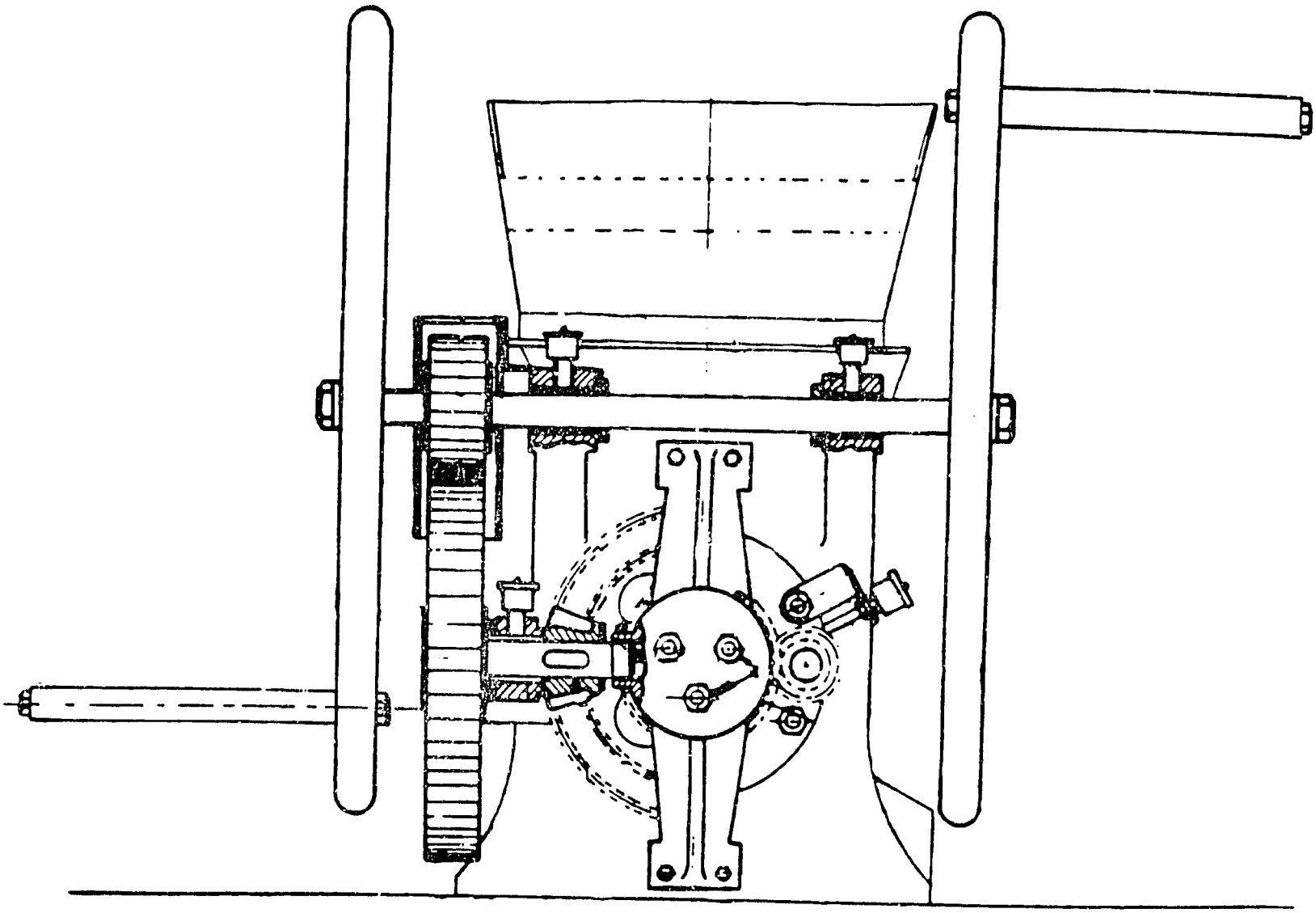

Figure 8. Front View of a Manual Colin Expeller

Source: OPC/APICA 1985.

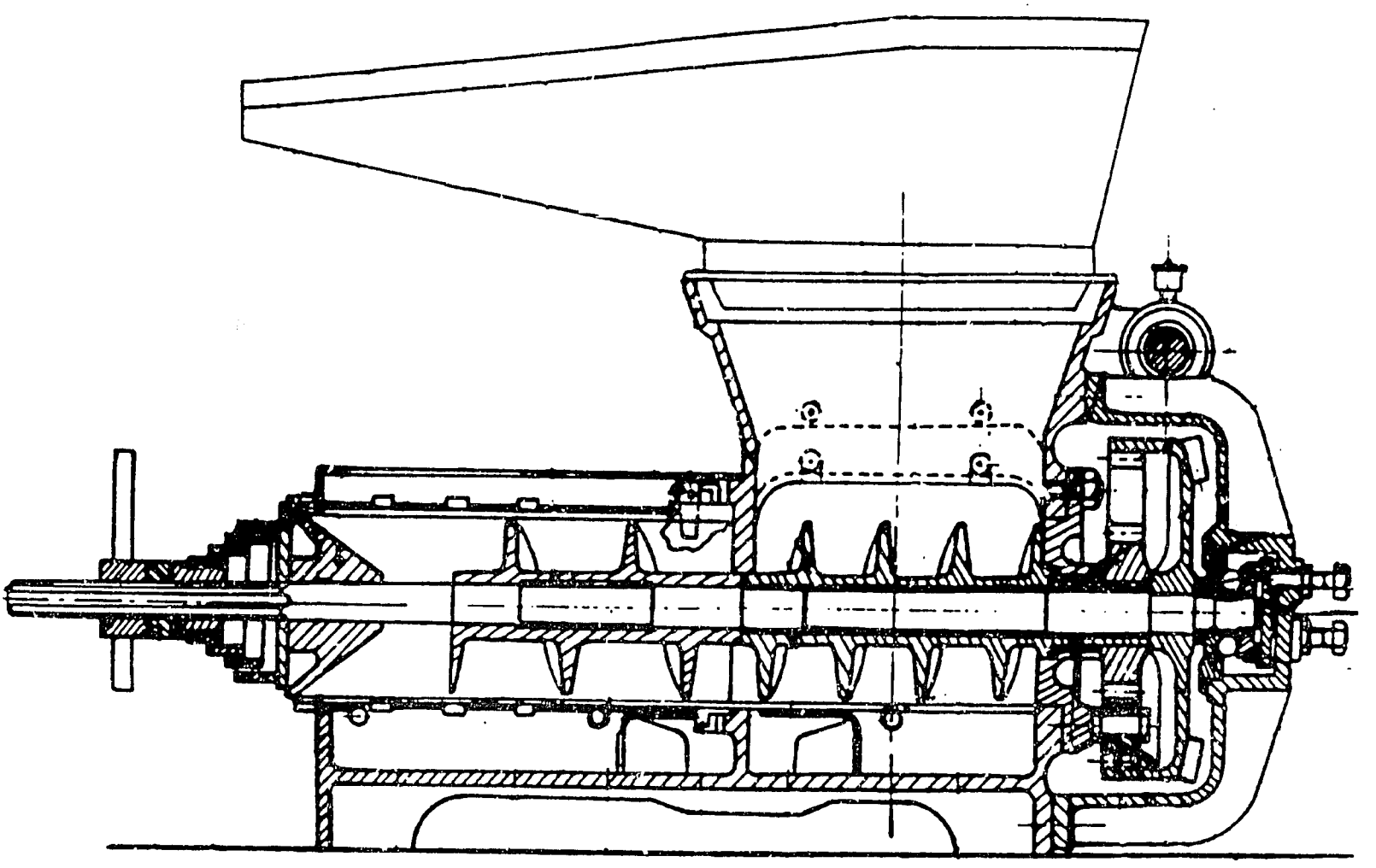

Figure 9. Side View of a Manual Colin Expeller

Source: OPC/APICA 1985.

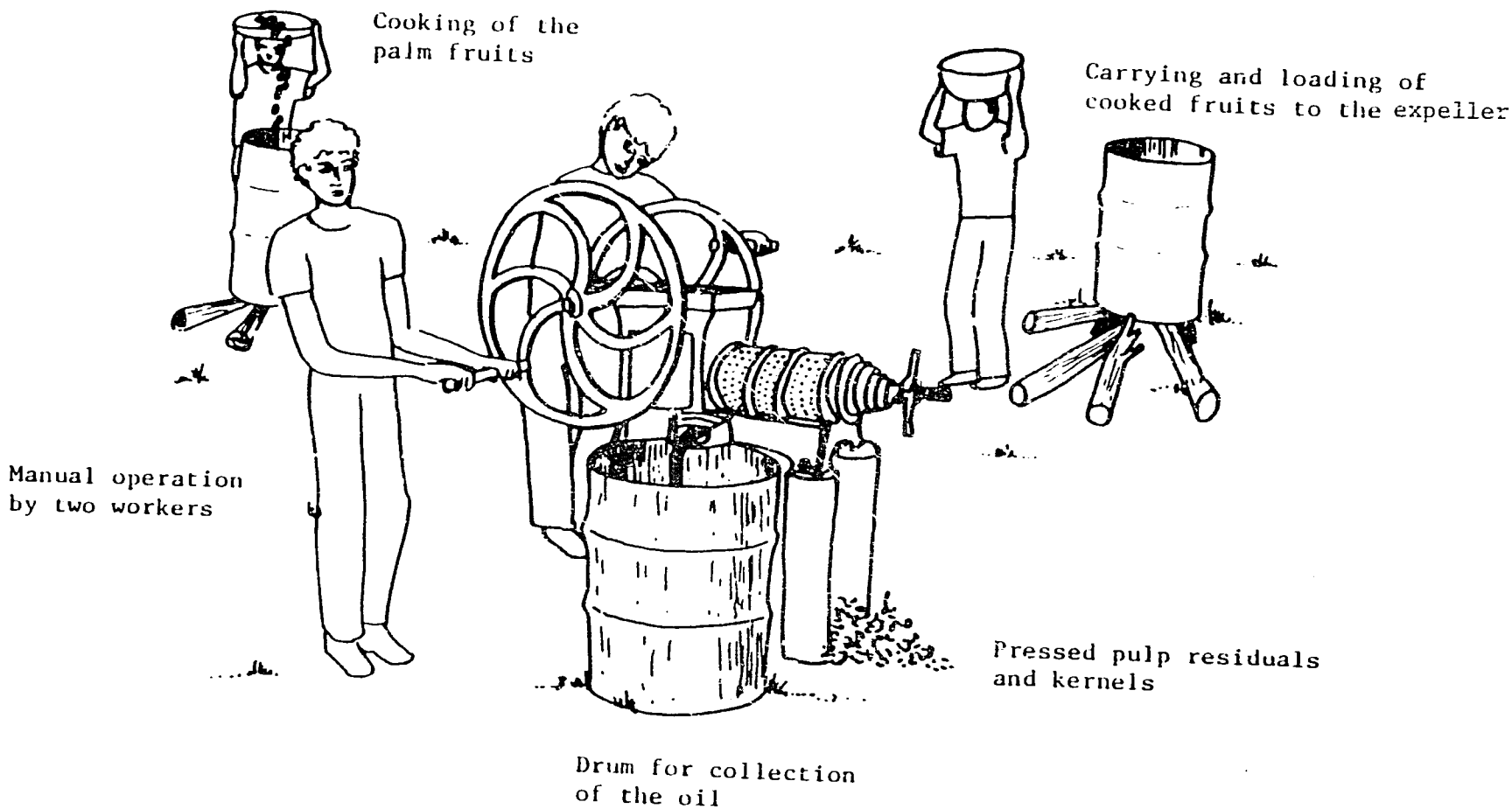

Figure 10. Use of a Manual Colin Expeller

Source: GRET 1984, after APICA.

triple the above land area with this variety to keep the device occupied at a high rate of capacity use.

Before pressing, the fruit is cooked for 3.5 hours and it should still be hot when it is fed into the press. The manual press is operated by 2 people turning the handles while another 2 people tend the cooking and feeding of the press. One less worker is required for the motorized press. Continuous filling helps prevent jamming in the manual press. The crude oil flows into a vat and the kernels are discharged through the exit cone without being broken (OPC 1985).

The Colin is best-suited for improved varieties of oil palm, which have small kernels relative to the amount of pulp. When the kernels come in contact without pulp between them, it decreases the efficiency of this press considerably. For the imported, motorized Colin, the extraction rate from ffb has been estimated at 10% for Dura and 21% for Tenera (Traut 1982). The manufacturer of the Cameroon version reports an extraction rate of 17% with Tenera ffb from a different source (OPC n.d. (b)). The 17% figure for this expeller was confirmed by another test (Spaenhoven 1986). The financial viability of purchasing a new Colin may depend heavily on the availability of improved varieties of oil palm, whether a farmer is processing his own harvest or doing service pressing for a share of the output.

The Colin is a sturdy expeller with good reliability and a long expected life. The original press was made of cast iron components, which are expensive but durable. When a Colin breaks down, the cause is generally easy to identify. Proper regulation of the screw as well as routine cleaning after each use and regular lubrication are important in reducing downtime.

OPC currently sells a manual Colin at CFA 2,968,736, excluding the 10.99% sales tax. The base price for the mechanized version is CFA 4,107,580 with a gasoline motor or CFA 4,049,915 with an electric motor. There is little potential for further price decreases for the domestically produced Colin because it is complicated to recondition or manufacture (Laffitte 1987).

At a minimum, a Colin expeller can be expected to last 20 years although major repairs would be required after 10 years. Annual maintenance costs for the two screws would be CFA 82,000 in parts and CFA 40,000 in labor. In addition, the screw behind the main screw needs adjustment after every 1,000 hours of operation; the labor cost for this would be CFA 20,000. The motor has an expected lifetime of 4,000 hours of service and costs about CFA 400,000. After 2,000 hours, maintenance costs of CFA 200,000 are likely for the motor (Bielenberg 1987). Other maintenance and operating costs for a motorized Colin include (1) motor fuel consumption -- 2.75 l/hour at a cost of CFA 250/l; (2) lubricating oil for the motor -- 3 l/month at CFA 1,000/l; (3) fuelwood for cooking palm fruits --equivalent to CFA 1,500/day; and (4) replacement spark plugs and screens, and cleaning the motor -- CFA 7,500 per month (Moutsi 1987).

A modified, manual Colin has been designed by the Centre

Nationale d'Etudes et d'Experimentation du Machinisme Agricole (CENEEMA). This parastatal is charged with experimentation and demonstration of prototypes of equipment for farms and agricultural product processing. The CENEEMA expeller differs from the Colin in its transmission system. All of the parts for this press were made to order in Cameroon, but some parts would wear rapidly since they are not made of hard steel. The extraction efficiency of the press has not been measured. Three prototypes were built in late 1985, but none of these presses have been commercially disseminated.

Horizontal Caltech Expeller

The horizontal-axis Caltech is a modification of the Colin expeller designed by Daniel Turquin and Jean Claude Barnaud, both of the Altech Co., and Carl Bielenberg, then with Appropriate Technology International. GRET provided some financial support for the design work of Altech, a small French firm. Altech produced the prototype, which was financed by la Fondation de France. La Boutique d'Innovation Technique (B.I.T.) also provided some assistance. The development costs for the press totaled French francs 540,000, in addition to costs borne by ATI and APICA/OPC (GRET 1986).

The horizontal Caltech is simpler and smaller in scale than its antecedent (figures 11-13). It has a single auger shaft that can be made of steel sheet and plate. Other features that distinguish the Caltech from the original Altech prototype include

1. Use of two frame plates instead of three and a reduction in the plate size,
2. Substitution of a perforated multi-segmented sheet steel cage with separated square steel bars,
3. A decrease in the size of the worm gear reducer, and
4. A reduction in the diameter of the back-pressure adjustment screw (Bielenberg 1986).

The gear reducer for the horizontal Caltech has to be imported, but it is a standard industrial drive produced by many firms in developed countries. Nevertheless, it costs CFA 270,000 delivered, about half the total materials costs of the manual press (Laffitte 1987). This device does have several advantages. It simplifies construction because gears and precision transmission components are no longer needed, and it is less susceptible to breakdowns (Bielenberg 1985).

Like the Colin, the horizontal Caltech is a continuous-feed machine capable of depulping and pressing palm fruits at the same time. For depulping, the Colin relies on the difference in the speed of rotation between two screws turning in opposite directions. This requires a complex transmission of special gears. The Caltech does the depulping in a simpler way that only requires one screw.

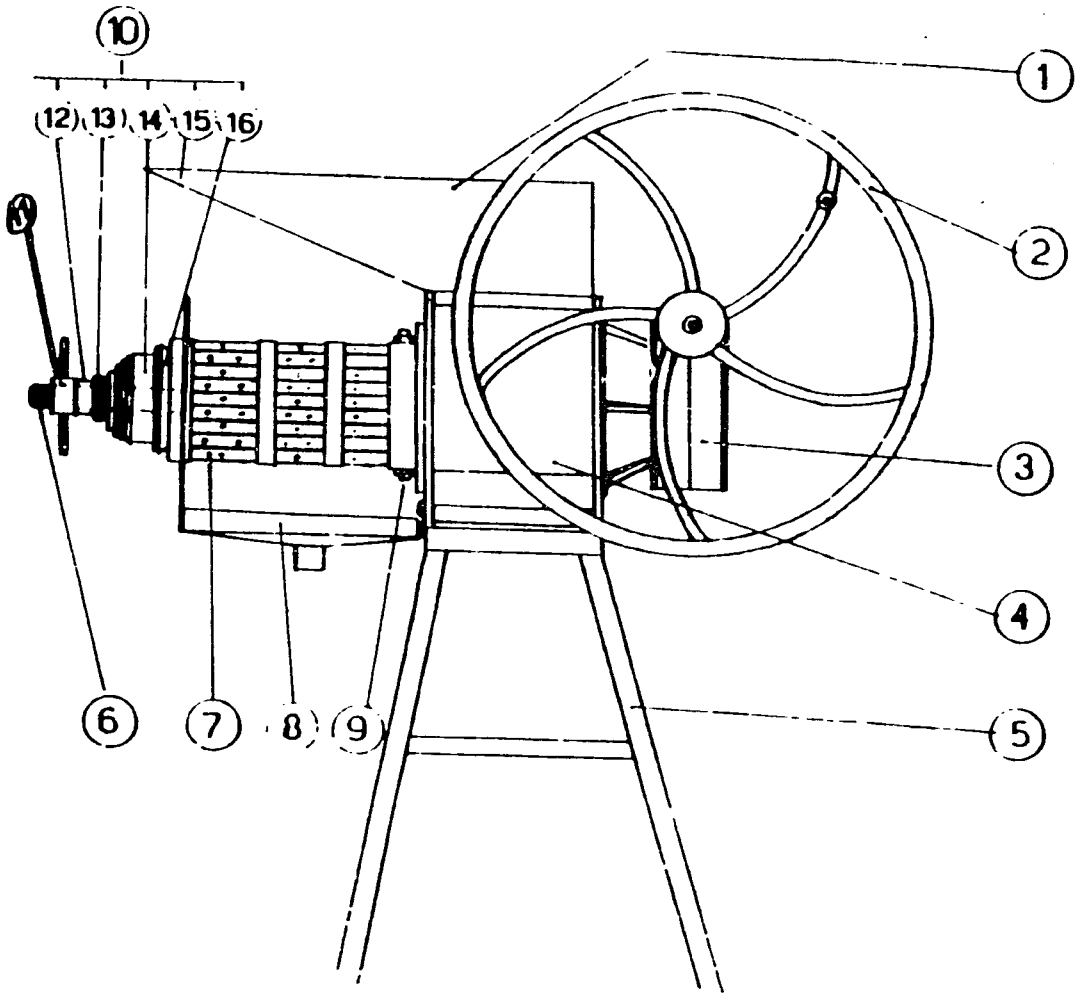

#	Designation
1	Intake Hopper
2	Handle Wheel
3	Gear Reducer
4	Frame
5	Frame Support
6	Lead Screw Shaft
7	Cylinder
8	Recovery Container
9	Depulping Knife
10	Pressure System
11	Three Handle Screw Nut
12	Key Ring
13	Bronze Ring
14	Coil Spring
15	Cone Plate
16	Main Pressure Cone

Figure 11. Side View of a Manual, Horizontal Caltech Expeller

Source: APICA

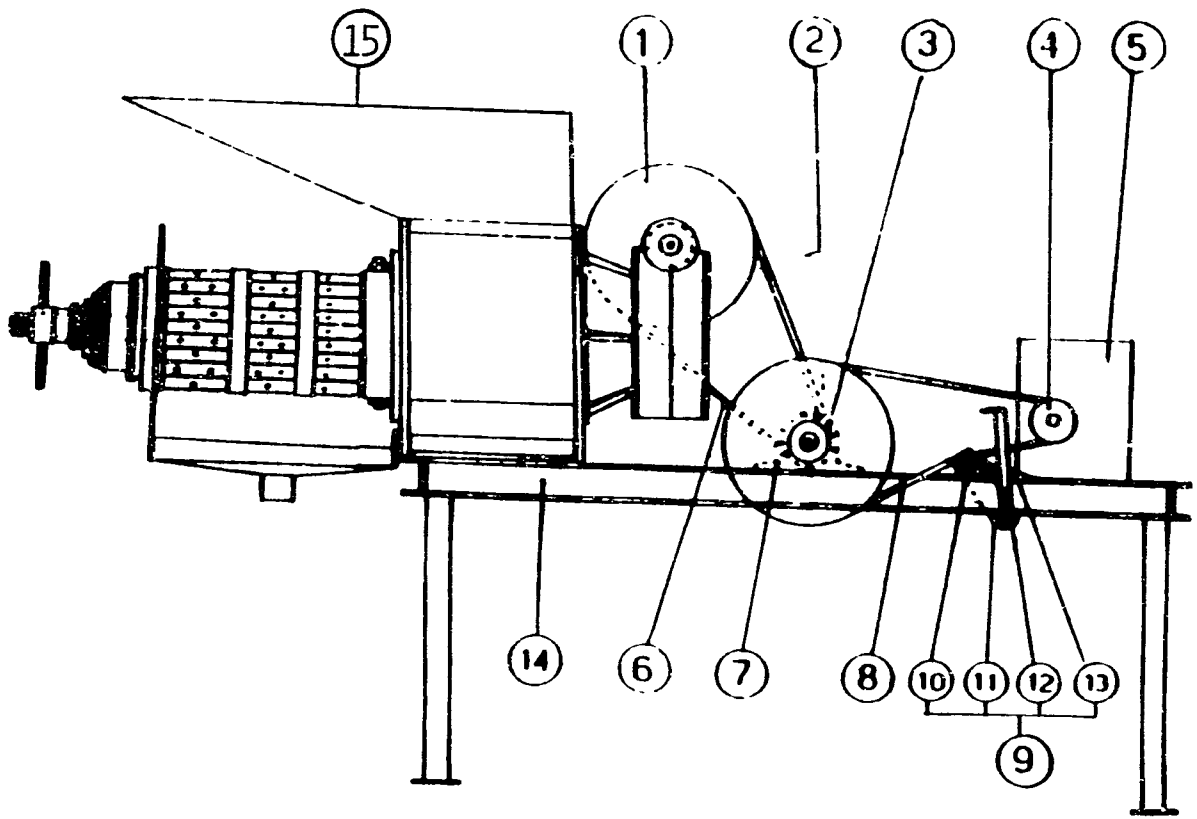

#	DESIGNATION
1	Gear Reducer
2	Intermediate Pulley
3	Intermediate Pulley (Small)
4	Motor Pulley
5	2 H. P. Engine
6	Double Belt Transmission
7	Intermediate Shaft Bearing
8	Single Transmission Belt
9	Clutch System
10	Clutch Bearing
11	Clutch Handle
12	Clutch Lever
13	Clutch Spring
14	Chassis
15	Intake Hopper

Figure 12. Side View of a Motorized, Horizontal Caltech Expeller

Source: APICA.

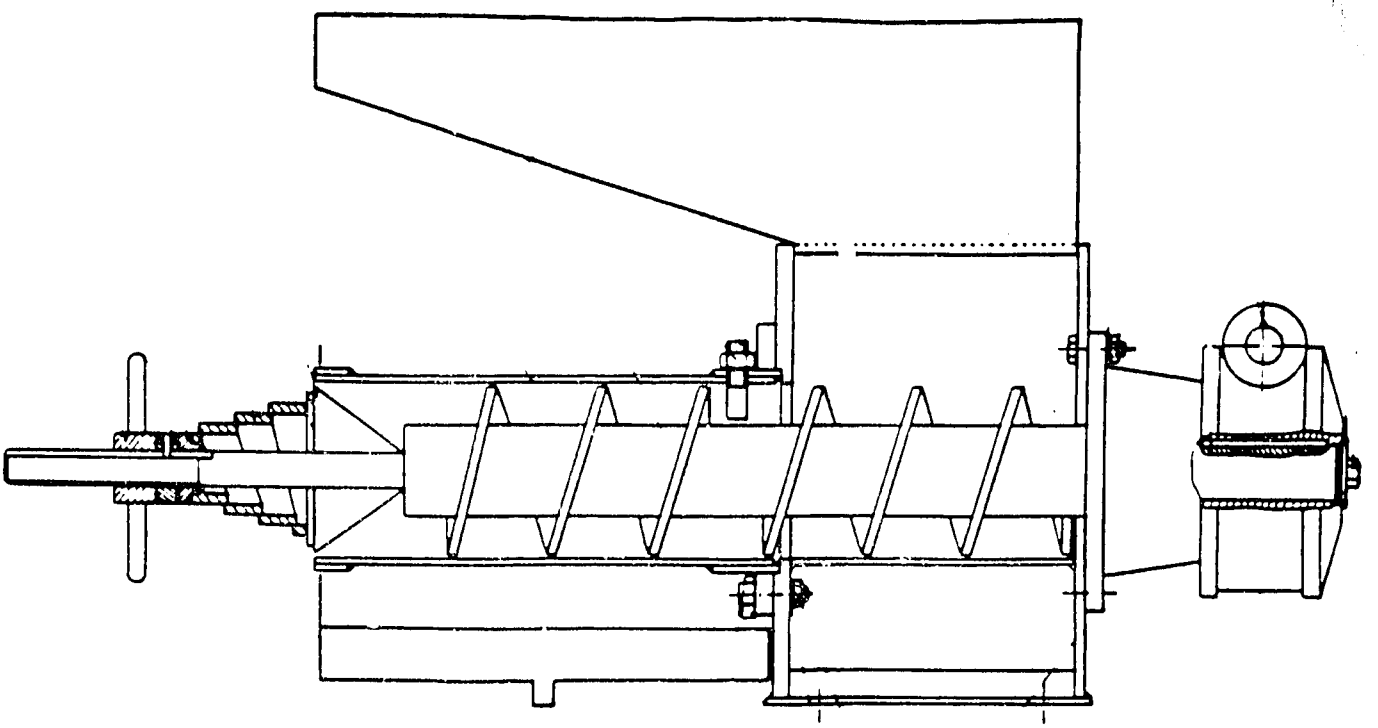

Figure 13. Cross-Section of a Horizontal Caltech Expeller

Source: GRET 1986, after APICA.

Hot palm fruits are fed in from the side as the press is powered by a hand crank or motor. The pressed fibers are removed at the end of the exit cone and the oil flows from perforated holes in the side of the cage into a collection vat.

The manual horizontal Caltech has a capacity of 90 kg of stripped fruits per hour, while the motorized version can handle 170 kg/hour. It takes 4 unskilled workers to operate the manual pressing system, and only 3 for for the motorized system (OPC 1987a). If used 4 hours per day for 200 days per year, the manual Caltech could process the output of 14.5 ha of Tenera plantations. Similarly, the motorized Caltech could serve an area of 27.5 ha of Tenera. Because the yields are one-third as high for Dura as Tenera stands, it would take three times as much land to produce the equivalent number of Dura ffb. Since the capital costs are much lower for the horizontal Caltech than for the Colin, the former can be financially viable at a smaller throughput rate.

In mid-1987, prices for the horizontal Caltech expellers in CFA were as follows:

Type	Without Tax	With Tax
Manual	1,098,568	1,219,300
Motorized (electric)	1,705,000	1,892,380
Motorized (gasoline)	1,845,707	2,048,550

The manufacturer will give cash purchasers a discount from the above prices: 10% for the manual and electric-powered Caltechs and 5% for the diesel model (OPC 1987a). These prices include delivery and installation costs, which typically run CFA 50,000-100,000 (Toukam 1987).

The price net of tax is based on production costs plus a margin of 35%. About 55% of the production costs are variable costs and the rest are fixed costs (Laffitte 1987). Overhead costs for a recently established manufacturing enterprise like OPC are relatively high, in part due to the low volume of production and the slow movement toward diversification of the product line. Spaenhoven (1986) recommended simplification of the production methods to decrease the cost of these expellers, and the costs have been reduced somewhat since then. OPC also intends to relocate to reduce its high rent costs. However, OPC has not had to bear the costs of managerial assistance provided by APICA. Other possible ways of reducing the costs include greater reliance on subcontracting of parts or shifting production entirely to existing, diversified workshops.

The Caltech can use a 2-hp motor, which is cheaper but less durable than the engine needed for the motorized Colin (Egli 1987). A gasoline-powered motor can be added to an existing manual Caltech for CFA 832,700, including installation, all auxiliary parts, and taxes amounting to CFA 82,452. The wholesale cost of a new motor is CFA 152,000 plus tax (OPC 1987).

If Tenera is being processed, long knives should be used in

the Caltech expeller, while shorter knives are used for Dura. Replacement knives only cost CFA 3,000 and the press operator can change them easily (Moutsi 1987). Improper adjustment of the knives can decrease the efficiency of the manual Caltech.

The extraction efficiency also varies with the variety of fruit. With Dura, special handling is needed to ensure good efficiency. One way of doing this is to recycle fibers from the first pressing back into the hopper for repressing, but this is not generally done in Cameroon (Spaenhoven 1988). The more common alternative there is to use a mix of 30% Dura and 70% Tenera to provide a ratio of pulp to kernels conducive to oil extraction in this press. A mix of 60% Dura and 40% Tenera yields acceptable, but less favorable results (Moutsi 1987).

Using Tenera, Spaenhoven (1986) found that the manual Caltech has an extraction rate of 16% of the ffb weight, slightly less than the 17% reported for the motorized model. The same study measured an extraction rate of only 7.2% for Dura pressed in a manual Caltech without recycling the fibers (Spaenhoven 1986). Delluc of GRET believes that poor adjustment of the knives explains the low efficiency in that test, but Spaenhoven (1988) states that this would only affect the depulping, not the extraction rate.

A proponent of a simpler, screw-operated batch press has claimed that the manual Caltech is difficult to operate, causing workers to be fatigued after more than 30 minutes of continuous operation. He also alleges that women find this press too hard to use (Spaenhoven 1986; 1987). In fact, the horizontal Caltech is easier to use than the manual Colin because the former has a reduction ratio of 1/15, compared to 1/12 for the latter. Former users of the Colin interviewed by this author report that the manual Caltech is less difficult to turn than the manual Colin. Moreover, the Apostolic Women's Group of Otele operates a manual Caltech. Obviously, if higher capital and fuel costs were not a constraint, people would prefer a motorized press.

Total operating costs for the motorized Caltech are about two-thirds as much as for the motorized Colin. However, per unit of output, operating costs are similar for both presses because the Caltech has a lower capacity. The main operating costs include 1.8 l of motor fuel per hour, 2 l of motor oil per month, CFA 5,000/mon. for miscellaneous spare parts and cleaning, and CFA 1,000 per month for fuelwood to cook the palm fruits (Moutsi 1987).

The horizontal Caltechs have an expected lifetime of 10 years. Maintenance costs are lower for the Caltech than for the Colin. A replacement screw would be needed after 1,000-2,000 hours of use; this would cost CFA 41,000 plus CFA 20,000 for labor. The gear reducer should last for 8,000 hours of use, roughly 10 years, but there is not enough experience with it to know for sure and its lifetime might be shorter in the motorized model. Including markup and taxes, the gear reducer would cost CFA 295,000 and labor costs for its replacement would be CFA 20,000. If mechanized, maintenance costs for the motor would be CFA 115,000 after the first 1,000 hours of use. After another

1,000 hours of use, the motor would have to be replaced (Bielenberg 1987). A replacement motor would cost CFA 230,000, inclusive of the distributor's profit margin and installation (Toukam 1987).

Vertical Caltech Expeller

The vertical Caltech expeller was designed in 1985 by Carl Bielenberg, then on the staff of ATI, to meet the needs of smaller-scale producers of palm oil who could not afford a manual, horizontal Caltech. The vertical expeller is much cheaper because the design is simpler and all of the parts are domestically made, except for a spring that is available off-the-shelf.

With financial support from ATI, OPC built a prototype vertical Caltech in 1986 for testing and further modification. In mid-1987, field testing of a pilot model for a several months began with a small group of palm oil producers in the Otele area in Cameroon. By the end of 1987, 6 additional expellers of this type had been sold.

The vertical Caltech does not require an expensive, imported gear reducer; complicated gearing susceptible to breakdowns; or a cast flywheel because it develops the low-speed, high-torque motion of the expeller screw by using a capstan, rather than gearing down the relatively high rotational speed of a hand crank. Excluding tax but including delivery and installation, this press only costs CFA 406,794 -- less than four-tenths the cost of a manual, horizontal Caltech. The change in orientation of the cage and auger from the horizontal Caltech does not affect the extraction efficiency (Bielenberg 1988). However, the vertical Caltech can only be operated manually. A gear reducer would be necessary if the press were motorized and that would remove the cost advantage of this design (Moutsi 1987).

This machine is mounted on a vertical axis and the expeller screw is driven by pushing on the two sides of a wooden pole that turns the attached capstan (figure 14). The pole can either be pushed by two workers walking in a circle or by one draft animal. Leg muscles provide the power for this press instead of the arm muscles used for a manual, horizontal screw press. Alternatively, the vertical Caltech could be run by stationary operators passing six poles among themselves (Bielenberg 1986).

The social acceptance of an expeller operated in this way must be carefully assessed in the local context. In some parts of Africa, there is a possibility that people might shun walking in a circle to turn a capstan because they associate that type of work with beasts of burden. These are generally the areas where draft animals could be used to operate the expeller because they are generally available and a tradition exists for their use. Since animals are not used this way in southern Cameroon, there appears to be no social stigma to this form of work. The lack of a tradition of animal-powered machinery in large parts of Africa is because the trypanosomes carried by tsetse flies make it difficult to raise cattle. Research has been been conducted in the Ivory Coast on cattle breeds resistant to this disease. One

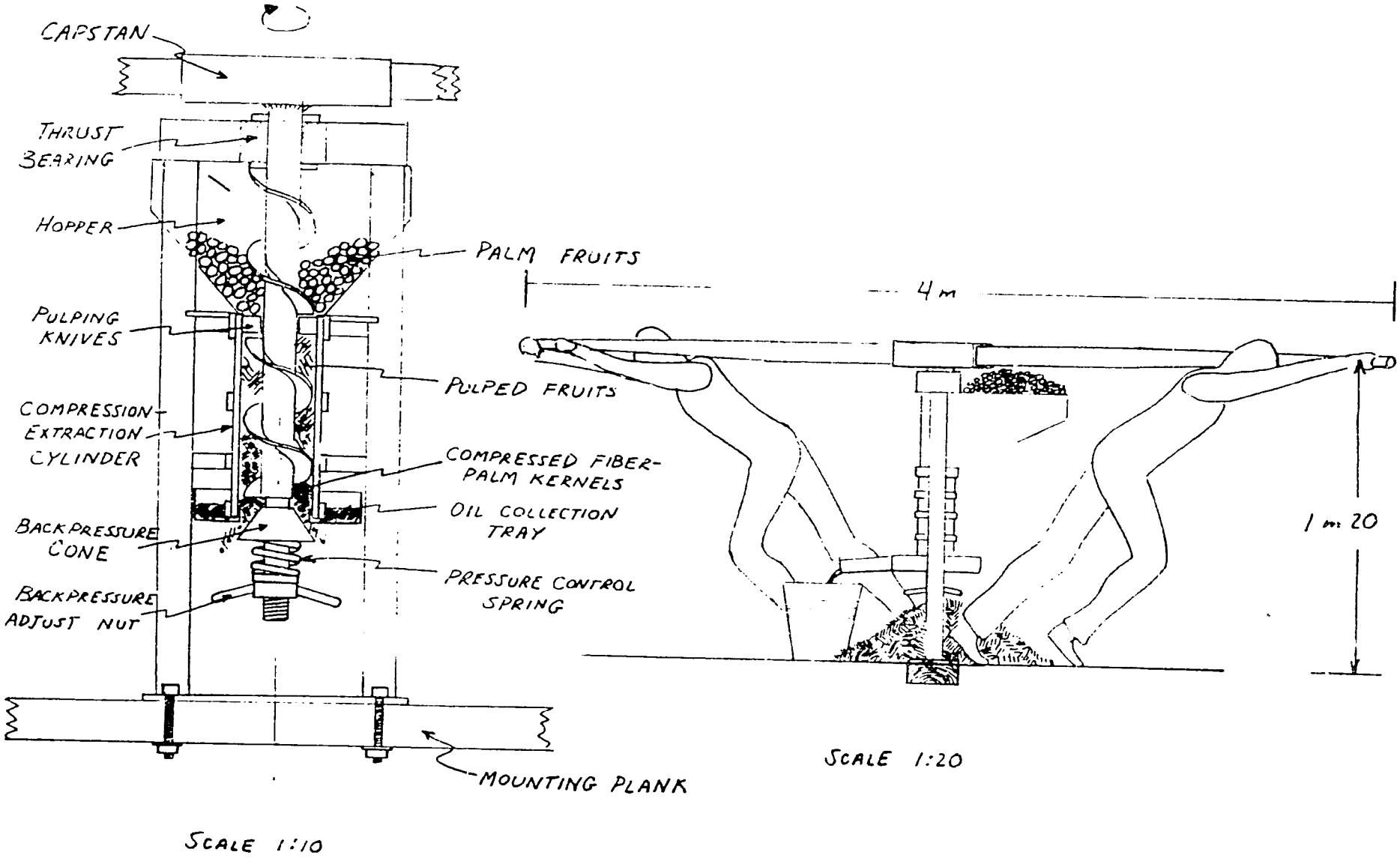

Figure 14. The Vertical Caltech Expeller

Source: Bielenberg 1988, Prepared for ATI.

such breed, the vache Ndama, is being tried by SOCAPALM in Cameroon. Donkeys are also relatively resistant to trypanosomes, but have not been introduced into the forest zone of Cameroon and the people there are unfamiliar with the raising and management of this species (Laffitte 1987).

In southern Cameroon, the social acceptance issue may hinge on whether men find this form of labor inconvenient and whether the ability to afford their own oil press could outweigh the possible inconvenience. The answer to this question may differ for households that use the traditional process of oil production and those that pay for oil extraction services. During the first field test of the vertical Caltech, this author noted that the level of effort required is tiring, but not excessive. One user reported that he would prefer to stand in one place and was worried about getting dizzy or falling. However, he remained interested in the press because its price is so much lower than that of a manual, horizontal Caltech (Yebga 1987).

In theory, the vertical Caltech has the same capacity as the manual, horizontal Caltech. However, in view of the different mode of labor use, a conservative estimate of its capacity would be 70 kg of stripped fruit per hour (OPC 1987a). If operated 4 hours per day for 200 days per year, it could handle the harvest of 11 ha of Tenera plantations or 33 ha of semiwild Dura. Although this press has a slower production rate than the horizontal Caltech or Colin, it is sufficient for small-scale producers. It is particularly appropriate for farmers wh only have Dura or less than 3 ha of Tenera.

A palm oil producer who would be interested in buying a press of this scale would probably use it at well below the maximum capacity, just for the family's own production. Retirees and women heads of households seeking an income with low capital investment and relatively easy supervision of a small number of laborers close by might also be interested. It is unlikely that there would be a large demand for service milling with the vertical Caltech in areas where a horizontal Caltech or Colin are reasonably close.

Although it is too soon to tell, the vertical Caltech is expected to last 10 years. The screw would need replacement after 1,000 hours of use; it would cost CFA 40,000. The wooden thrust bearing would have to be replaced following 500 hours of use, at a cost of CFA 3,000. Both of the above tasks could be done by the owner. If a service call were required, the labor cost would be CFA 20,000. An automobile bearing could be substituted for the wooden thrust bearing at an additional cost of CFA 20,000, but then it would not require replacement (Bielenberg 1987).

Screw-Operated Batch Presses

Screw-operated batch presses have been used for palm oil extraction in Africa since around 1930 (Nwanze 1965). These presses consist of an upright cage containing a movable piston,

which is acted upon by a centrally located screw. Usually, the screw, turned by a pair of long handles, rotates inside a nut fixed in the head of a heavy frame surrounding the cage.

Screw presses operate on a batch basis and do not depulp the fruit, a step that must be performed separately prior to pressing. Depulping is usually done in a mortar with pestle. Also, the extraction efficiency is relatively low for the less sophisticated presses of this type. Nevertheless, these presses are simple and inexpensive compared with other mechanical methods, and labor-saving and efficient in comparison to the traditional technology.

Potential buyers in the Otele region are not interested in equipment that does not depulp and press simultaneously because they have grown accustomed to use of the Colin expeller (Laffitte 1987). In less prosperous, palm-growing areas in Cameroon and other countries in West and Central Africa, there may be a demand for small, inexpensive screw-operated batch presses for palm oil production. Examples of these presses include the TCC, SODIZI, Sierra Leone, Tikonko, KIT, and UNATA presses.

TCC (Kumasi) Press

The Technology Consultancy Centre (TCC) at Kumasi, Ghana developed a manual, spindle press. This press consists of a raised platform with a centrally mounted screw or spindle, a perforated cage, and a nut, which when turned forces a piston or pressing plate down into the cage (figure 15). Two operators turn the handles of the press by walking in a circle; they can generate a pressure of 40 kg/cm^2. This figure is somewhat higher than the actual pressure in the cage due to screw-nut friction. The TCC press is unusual in that it eliminates the need for a heavy frame by fixing the screw to a base plate under the cage and using the handles to rotate the nut, which acts upon the piston via a tubular shaft surrounding the screw.

This machine has a pressing capacity of 20 kg of pounded, boiled palm fruit. Under experimental conditions, each batch can be done in 12 minutes, which would allow the processing of 100 kg of prepared fruit per hour. In a more realistic setting, 4 workers in Ghana processed an average of 45 kg of palm fruit per hour with this press. The extraction rate was reported to be 14.6% with Tenera, or 65% of the maximum theoretical efficiency. A cooperative enterprise using the press achieved an extraction rate of 14% (Dichter 1987). A second pressing could increase the oil extraction rate by 25%, but would reduce the output per day (Donkor 1979).

Boiled palm fruit has to be pounded before it is placed in this press. Reheating the fruit after pounding is also recommended if Dura is used or Tenera is pressed twice (Merx 1987). However, reheating would increase the labor time and fuel required.

The pounding required before pressing is generally done in a wooden mortar with a pestle. TCC has also developed a separate,

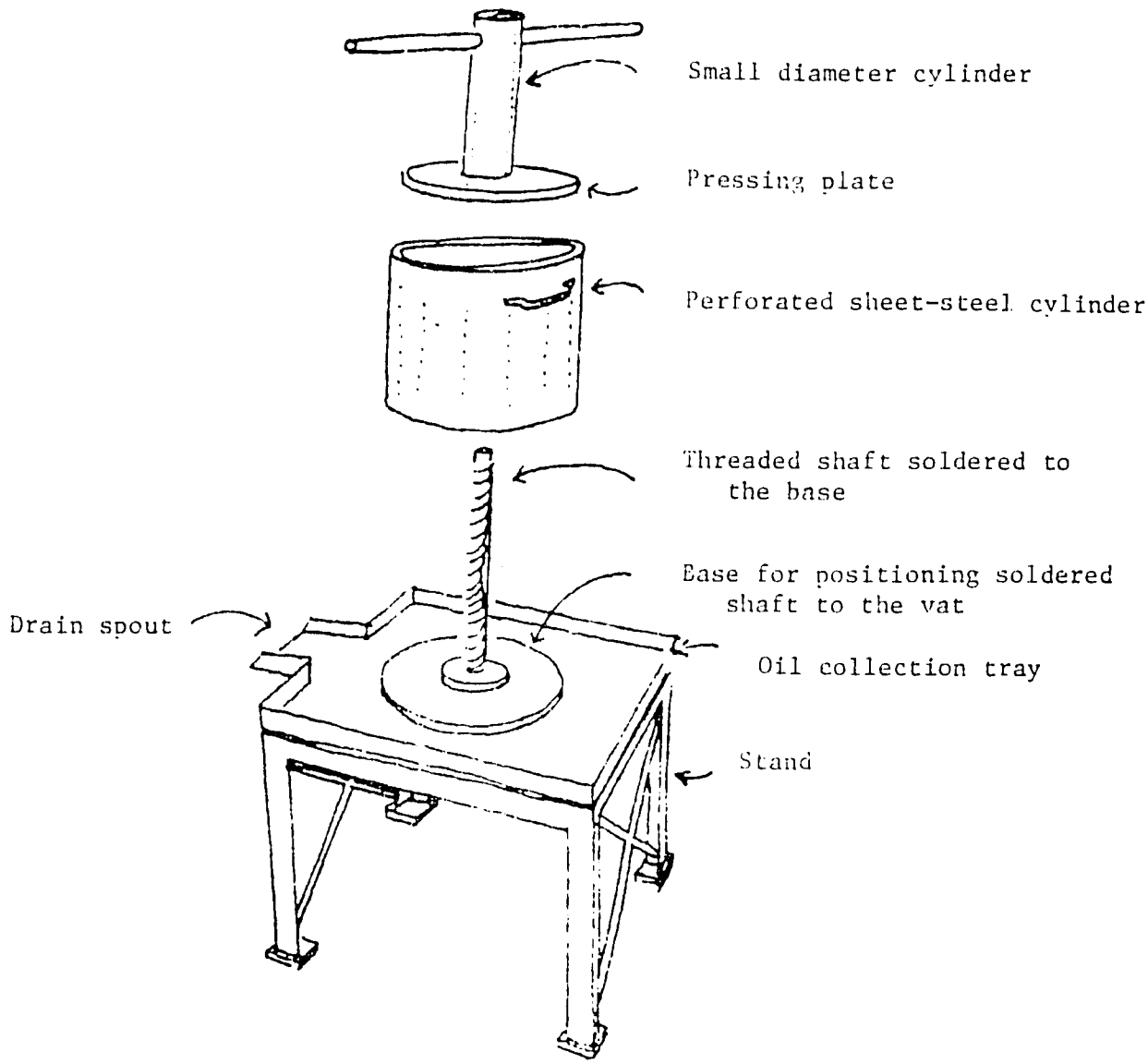

Figure 15. The TCC Spindle Press

Source: Langley 1982.

mechanical pounder. This horizontal pounding machine has a capacity of 100 kg of cooked fruit per hour (Merx 1987).

A complete TCC pressing system would consist of 1 pounder, 2 presses, and a steam sterilizing kettle. With this system, 8 women could process as much as 600 kg of palm fruit in an 8-hour day (Merx 1987).

Technoserve is promoting the TCC press in Ghana. One problem that has been noted there is that these locally produced presses were not made of stainless steel because of its cost. As a result, the first few pressings must be discarded each time until a coating of oil builds up to prevent rust from getting into subsequent pressings of oil (Dichter 1987). The TCC press has also been used in Sierra Leone (APICA/GATE 1983).

SODIZI (Casamance) Press

An NGO, Environnement et Developpement du Tiers Monde (ENDA), developed a smaller, version of the TCC press in the early 1980s and the design was further modified in 1987 (figure 16). It is known as the SODIZI press after the original manufacturer in Senegal, the Societe du Domaine Industriel de Ziguinchor. Now, it is being fabricated by informal sector blacksmiths using locally available materials except for the cast screw and perforation of the sheet metal, which are still done by SODIZI. Other purchased materials include bolts and iron plates. The cage and recovery drum can be made from a recycled gasoline drum, the piston is sheet metal, the armatures are from truck springs, and recycled nuts are also used. In addition to standard forge facilities and tools such as hammers, an anvil, and water tank, a blacksmith would have to invest less than CFA 20,000 for equipment to produce the press (ENDA 1987).

Materials costs for the SODIZI press total CFA 21,000, including CFA 10,000 for the screw (ENDA 1987). These cost estimates are based on construction of a lot of 5 presses. Volume discounts are available for the materials and some can only be obtained in minimum order sizes. Labor costs add another CFA 15,000. Thus, total production costs are CFA 36,000, excluding management costs and other overheads, depreciation of equipment, and a profit margin. In Senegal, the presses sell for around CFA 50,000 (Perry 1987).

Most of the dissemination effort for the SODIZI press has been at Casamance in southern Senegal. As of 1985, 70 were sold around Casamance and 13 more were in production (ENDA 1985b). ENDA has also promoted the press in Guinea-Bissau. ENDA provides credit to village groups for the cost of the press. The repayment period is two years.

The pressing can be done by two women, but young men are often hired in Casamance for this task (ENDA 1985b). About 19 l of palm fruit can be processed in a cycle of 10 minutes. The pressure obtainable with the SODIZI press is much lower than with the TCC or other manufactured presses, and thus its extraction efficiency is lower. In practice, users are able to raise

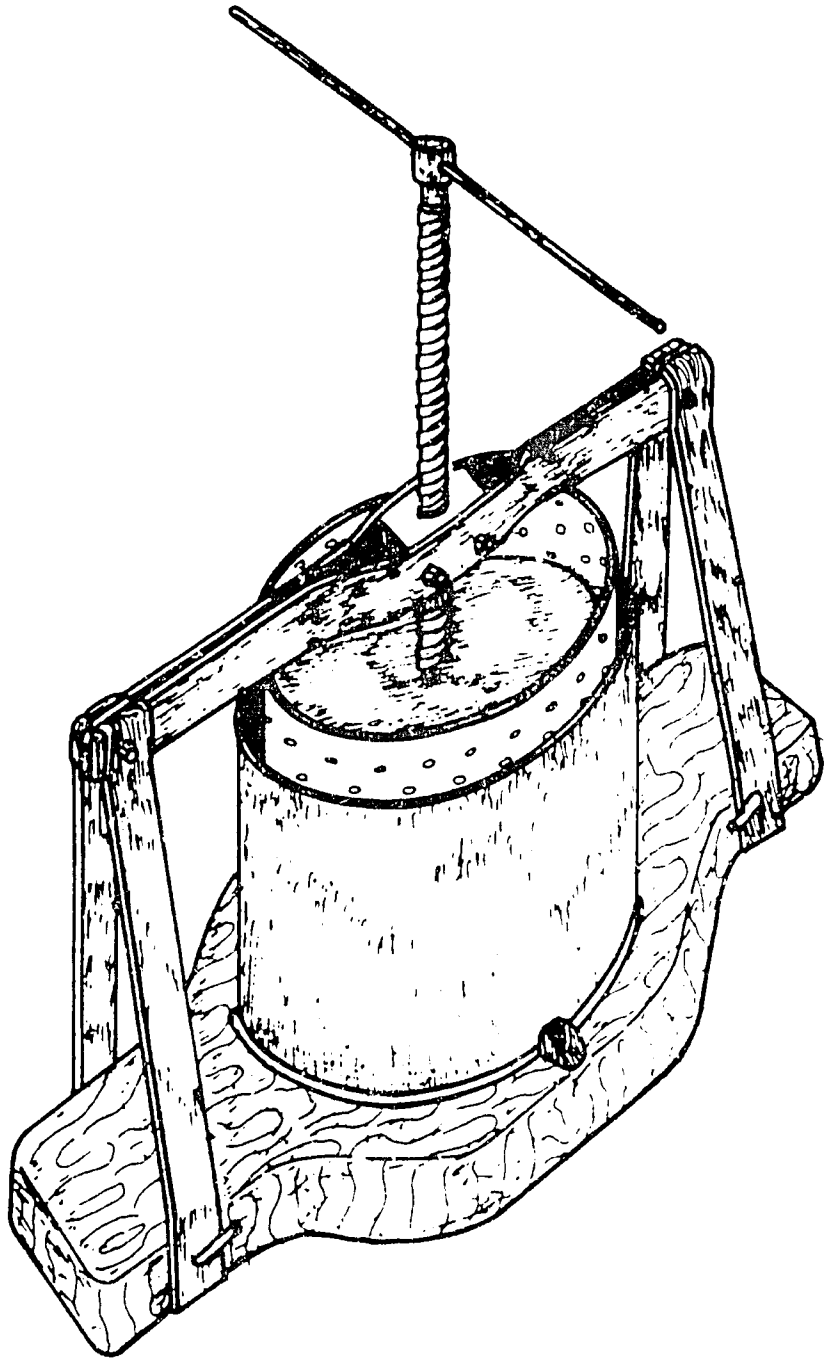

Figure 16. The SODIZI Press

Source: ENDA 1987.

the extraction rate by doing multiple pressings with hot water added to the fiber before repressing. Operating 24 weeks per year, the expected life of the SODIZI press is at least 3 years (GRET 1984). However, ENDA (1987) states that the screw can last 10 years, with annual refitting in a local workshop at a cost of CFA 3,000 per year. The screw should not be used if out of alignment and thus, the rigidity of the frame is important. Wear on the bronze nut for the screw should be monitored.

Producer prices for artisanal palm oil are higher in southern Senegal than in Cameroon, CFA 450-550 per liter. AT this price, 80-100 l must be produced per year to amortize the costs over 2 years (ENDA 1987).

Sierra Leone Press

In 1974, the Ministry of Agriculture in Sierra Leone designed the Mark I, a vertical, screw-operated batch press (figure 17). A larger, improved model, the Mark II, was tested in late 1975. This press has a small cross-sectional area so that the pressure is kept high for better extraction efficiency. The efficiency is reported to be 80%. However, as a result, the capacity is only 15 kg of cooked, pounded fruits, which is lower than that of many competing presses. The palm fruit must be pounded separately before oil extraction with this press. The press can be fitted with extension arms and operated by 2 workers turning the arms while walking in a circle (Geddes 1977). This press has not been commercialized.

Tikonko Press

The Ministry of Social Welfare and Rural Development of Sierra Leone in conjunction with the U.N. Economic Commission for Africa developed the Tikonko press. This press consists of 2 perforated cylinders. The inner pressing cylinder is galvanized iron sheet and the outer cylinder is iron plate. The inner cylinder is loaded with pounded, cooked fruit. Extraction takes place by rotation of the handle attached to a screw thread connected to the piston. Oil flows out the holes from the inner cylinder to the outer cylinder. A small boiler heats the inner cylinder through a rubber hose enclosed in a galvanized jacket (ECA 1983). The ASTRAD press, developed by the University of Sierra Leone, is a similar heat-assisted, screw-operated batch press (Stevens 1984).

The Tikonko press was not field tested or demonstrated well and women felt better off without it (King-Akerele 1982). Some villagers would not try it and users reported that it became

The Tikono press is low cost and portable by two men. A pressing cycle takes 10 minutes and yields about 3.8 l of oil. The extraction rate is said to be 18% with Tenera, 80% of the theoretical oil content (ECA 1983).

The Mk. I press. Oil can be seen flowing into the containers as initially the operator meets little resistance to the screw

Figure 17. The Sierra Leone Mark I Press

Source: Geddes 1977.

damaged easily, pressed too little at one time, yielded less oil than the traditional process, or was not easily operated by women. Acceptance of the press was also hindered by the need for separate pounding of fruit before loading, even though this was part of the traditional activity of women and children (ECA 1983).

One independent planter with Tenera reported that (1) the small boiler required frequent and time-consuming addition of water and fuelwood for repeated boilings; (2) waste material accumulated after the first two pressings blocked the flow of oil (this might not have been a problem with Dura); (3) the cylinder was too small so only 1 drum could be pressed per day, compared to 6 with the traditional process if sufficient labor were available; (4) the yield was three-quarters as much as with the traditional process; and (5) the separate pounding step proved to be a bottleneck.

KIT Screw-Operated Batch Press

The Royal Tropical Institute of the Netherlands, KIT, emphasizes the importance of the entire pressing system with a screw-operated batch press which includes

1. Steaming of the fruit,
2. Pounding to loosen the pulp from the fruit (requiring less effort than in the traditional process, which has to macerate the pulp as much as possible),
3. Reheating of the pulp,
4. Pressing,
5. Recycling the fibers (with Tenera) either in fresh fibers or separately, and
6. Clarification.

The KIT process is not tied to a particular press and may be used with KIT's own screw-operated press, the UNATA, or the TCC press.

The KIT screw-operated batch press can press 35-60 kg of cooked, pounded palm fruit per hour in its 8-l cage. Two perforated cages are provided to reduce delays in loading and unloading. The short lever designed for manual operation only can also be fitted with an extension arm (figure 18). The extraction efficiency can be 75% or more under well-controlled conditions in the field if the KIT system is used (Spaenhoven 1988). This press has the advantage of being portable since it only weighs 20 kg (Merx 1982). In 1982, it cost $350 (KIT 1982).

Operation of the press begins by loading the hot raw material into the press cage and compressing it with a small wooden pestle. Then, the filled cage is positioned under the press plate and the lever is turned clockwise to build up pressure. Next, the extension arms are locked into the lever and pressing is continued. To unload, the extension arms are removed and the short lever turned counterclockwise to move the spindle up. The press cage is taken out and replaced with the spare,

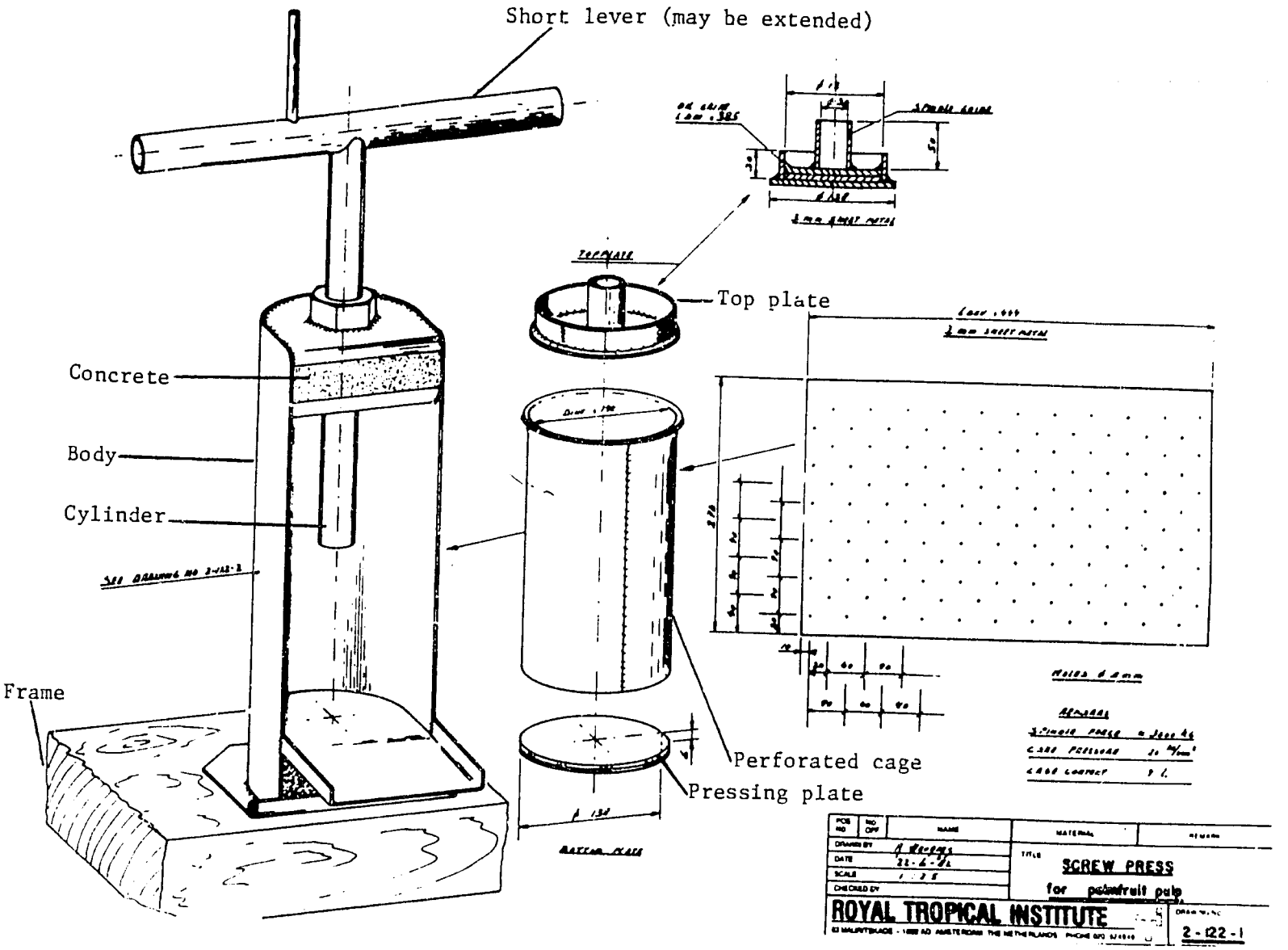

Figure 18. The KIT Screw-Operated Batch Press

Source: Altes, Heubers, and Merx n.d.

which is filled at the same time that the press cake is expelled from the first one. If Dura is used, half of the kernels should be removed by hand or the fibers recycled for a second pressing. Fibers can also be added back with Tenera to separate the kernels (Altes, Heubers, and Merx n.d.).

The KIT press may be appropriate for processing low-quality, wild palm fruit in Senegal, the Gambia, and Guinea Bissau via a semi-traditional process. In these countries, the wild fruit is small and the oil content of the pulp is low. The semi-traditional process involves steaming the fruit and moderate pounding to separate the pulp and kernel. The pulp is reheated in a KIT steaming kettle and pressed. Part of the oil enters the water and is separated in the same manner as in the traditional process. The extraction efficiency is about 60%, compared to 40% for the traditional process, which also takes more work.

Table 12 compares the number of work-hours required for processing 150 kg of Dura in the Gambia using the KIT system, an improved semi-traditional system, the semi-traditional process, and the traditional process in the Gambia. In Casamance, Senegal, this press is rented to processing groups in different places. In Guinea-Bissau, the material remaining after cooking the separation water, "bagash", is eaten (Altes 1988).

UNATA Press

The UNATA 4201 press is a modification of the OPM 100/10 and 50/20 presses and was developed in cooperation with KIT (figure 19). It differs from the OPM presses because of its reinforced frame and the 17-l cage is designed to reduce deformation during extraction of the last bit of oil. The size of the cage perforations should be 6 mm for palm oil extraction and 2 mm for sunflowerseed or peanut oil. Five press plates are used to equalize the pressure and allow recovery of the cake in small blocks. Points of wear in the design have also been improved (Altes, Heubers, and Merx 1986).

A pressure of 40 kg/cm^2 is needed for good oil recovery, and women can exert this without difficulty (Altes, Heubers, and Merx 1986b). The maximum capacity of this press is 125 kg of stripped fruit per hour, but a conservative estimate would be 500 kg of stripped fruit in a 6-hour day with this press (Spaenhoven 1988). It would take 6 hours for 2 women to steam this much fruit. On the following day, 24 person-hours of labor would be needed for threshing and pounding. Since it is difficult to penetrate pounded Tenera with steam, 3 hours is needed for reheating (Merx 1987). Pressing can be done as quickly as with the manual, horizontal Caltech, but with the UNATA, additional time is needed for depulping. Half of the oil is obtained in reheating and half in pressing (Spaenhoven 1988).

As with the KIT press, pressing should be preceded by two extra steps -- pounding followed by reheating. If the recommended cement mortar and wooden pestle are used, a 30 kg

TABLE 12
Work Hours Required for Processing 150 kg of Dura in the Gambia

	Traditional Process	Semi-traditional Process	Improved Semi-traditional Process	KIT System
Total Number of working-hours	12.0	12.0	7.0	7.0-8.0
Cooking in boiling water (hours)[a]	5.0	5.0	-	-
Cooking in condensing steam (hours)[a]	-	-	2.5	2.5
Pounding in small wooden mortars	15 kg/10 min	15 kg/10 min	-	-
Pounding in stone pounding mortar	-	-	50 kg/5 min	50 kg/5 min[b]
Pulp/nut separation in water	15 kg/10 min	15 kg/10 min	50 kg/10 min	-
Reheating pulp in boiling water (hours)	-	1.0	-	-
Reheating pulp in condensing steam (hours)	-	-	0.5	1.0[c]
Cooking oil/water emulsion twice and skimming the palm oil (hours)	3.5	3.5	3.5	-
Pressing pulp (hours)	-	0.5[d]	1.0-1.5[e]	2.0-3.0[c,f]
Clarification/drying oil	-	-	1.5	1.5
Finishing activities (hours)	1.0	1.0	1.0	1.0
Number of female processors	6	6	6	6
Number of male processors	-	2	0-2[g]	-

a) If cooking is carried out the day before, heating up the palm fruits until completely hot is sufficient.
b) Recirculation of fibers
c) Pulp/nut mixture
d) 1 press charge
e) 2 press charges in AEU screw-operated, batch press; 11 press charges in KIT screw-operated batch press
f) 20 press charges in 10-1 KIT hydraulic press, 12 press charges in 17-1 KIT hydraulic press
g) 2 men to run the AEU screw press

Source: Merx 1982.

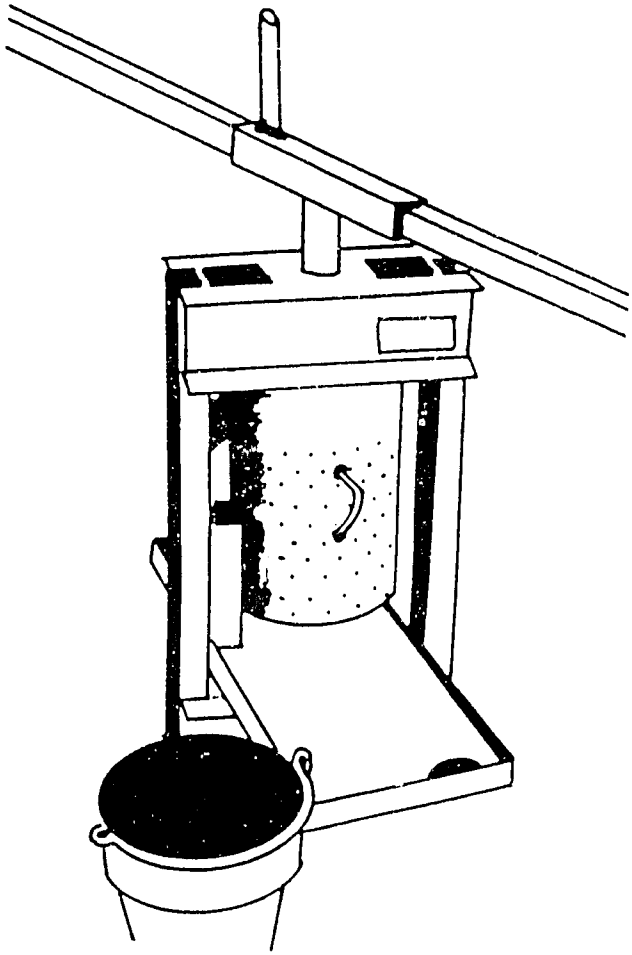

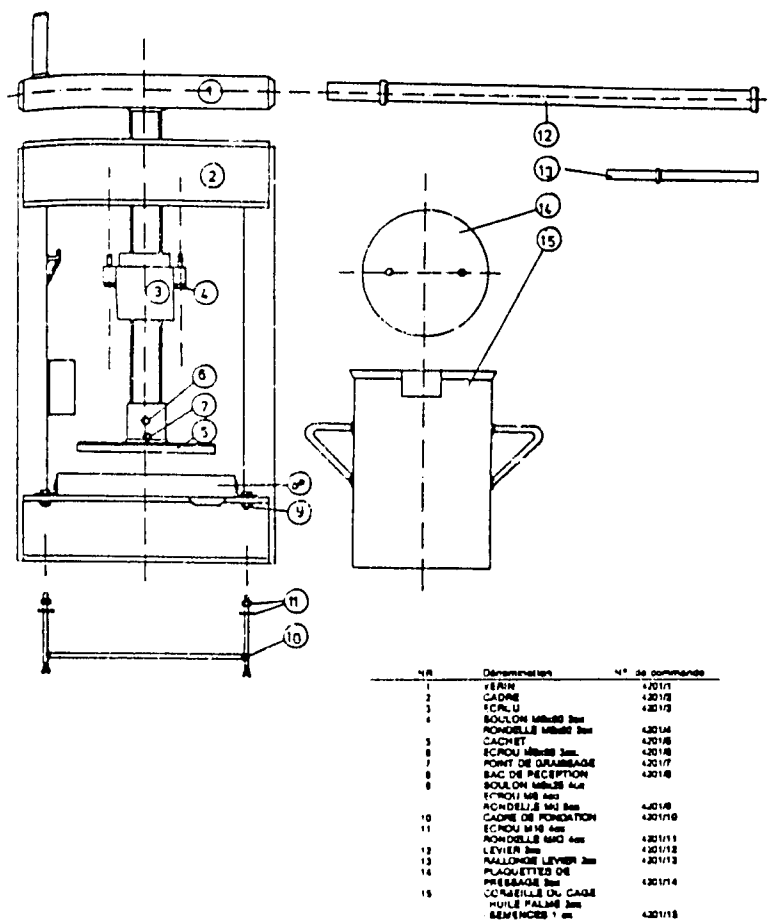

Figure 19. The UNATA 4201 Press

Sources: Altes 1986; Bulk 1986.

charge of fruit can be pounded in 5 minutes, but the labor is tedious. A special steaming kettle with an oil reservoir for reheating the pulp is an integral part of the KIT system. It is important to recycle the pressed fiber if Dura is used. Modifications made in the UNATA since 1986 include (1) addition of supplementary holes in the upper part of the cage to facilitate the flow as pressing begins; and (2) inclining the two sides of the recovery vats so oil does not stagnate and can flow off more easily.

A field test in Togo showed an efficiency of at least 75% with the UNATA if the pounded material is reheated for 2-3 hours before pressing. This was lower than the 88% efficiency measured for the motorized, horizontal Caltech (Spaenhoven 1988). A conservative estimate of the extraction rate from ffb is 8.5% with Dura and 15.5% with Tenera.

A UNATA press fabricated in Belgium cost CFA 200,000 in 1986 (Spaenhoven 1986). Production costs in Western Europe are less than they would be in Africa due to lower materials costs and fuel costs, and greater labor productivity. Although the UNATA is smaller than the vertical Caltech, the parts have to be sturdy to withstand relatively high stresses (Bielenberg 1987). Princen and Spaenhoven (1987) emphasize the purchase of auxiliary pretreatment equipment in addition to just the press. The estimated cost of the UNATA press system manufactured in Cameroon would be CFA 370,000 (Spaenhoven 1988).

The UNATA was designed to function with minimal need for replacement parts. The screw is made of hard, tempered steel. The points of wear in a screw-operated batch press differ from those of an expeller. The spindle and nut should last 5 years and could be replaced at a cost of CFA 65,000. Other parts replaced at the same time might cost CFA 58,500 (Spaenhoven 1988).

Approximately 50 UNATA 4201 or 4202 presses have been sold in Africa, Madagascar, Colombia, and Vietnam and about half of these are being used for palm oil extraction as opposed to other oilseeds (Princen and Spaenhoven 1987). APICA has tested the UNATA press in Cameroon. Although the UNATA may be appropriate for farmers with small plots of natural or improved oil palm due to its low capital costs, it requires more labor time than the vertical Caltech and yields a little less oil. However the UNATA can also be used for pressing oilseeds, unlike the Caltechs. To extract oil from most seeds such as peanuts, sunflowerseeds, and sesame, a pressure of 40 kg/cm^2 is needed, twice as much as for palm fruits. The model 4202 is adapted for oilseeds by having a cage with more numerous holes of smaller size and a means for removing the presscake.

Hydraulic Presses

Another technology for palm oil extraction is the hydraulic press. Operation of a hand pump causes fluid pressure to build up, forcing a piston down into the perforated cage containing the digested fruit. The piston is connected to a plunger that squeezes the material into packets, which may be separated by

pressing plates (figure 20). As a pressure relief valve opens, the piston returns up to its original position. Commonly, 20-25 of these cycles would occur per minute. A typical, manual hydraulic press has an efficiency of 85% (Asiedu 1986). Motorized versions can achieve efficiencies as high as the motorized Colin (Bek-Nielsen 1971).

A hydraulic press is easy to operate and can produce a higher pressure than a screw-operated batch press. An important disadvantage is the need for precision machining of cylinders, pistons, and valves as well as their susceptibility to corrosion in humid, tropical climates (African Regional Centre for Technology 1986). Examples of manual hydraulic equipment include the Stork, NIFOR, KIT, CENEEMA, and RVR presses. Motorized hydraulic presses have been produced by Stork, de Wecker, and AGRICO, among others.

Stork Manual Hydraulic Press

Stork, a Dutch firm, produced a manual hydraulic press with a capacity of 42 kg of crushed fruit in a 10-minute cycle. The oil extraction rate after clarification was 16% in tests at NIFOR. In this test, preparation of the fruit before pressing was done in a horizontal digester having a capacity of 250 kg of ffb. In early 1983, the digester cost 89,400 French Francs (GRET 1984).

NIFOR Manual Hydraulic Press

Because of the high cost of imported, hydraulic presses, the West African Institute for Oil Palm Research (now NIFOR, the Nigerian Institute for Oil Research) modified a Stork design in the 1950s with FAO/UNDP support (figure 21). The NIFOR press has been promoted by KIT and International Technological Assistance (ITA) of the Netherlands in the 1960s. The NIFOR press is less expensive than the imported Stork because it can be made locally using easily assembled components. The extraction efficiency is reportedly 80-90% (Moll 1987).

NIFOR recommends some optional auxiliary equipment with the NIFOR press: (1) an open-fired sterilizer/cooker with a capacity of 1 t of ffb, (2) a motorized, rapid digester (macerator) allowing a throughput of 250 kg of cooked fruit per hour, (3) a clarifier with a capacity of 800 l, (4) a rotary stripper, and (5) a multipurpose digester/cooker/sterilizer for 150 l of stripped fruit (ECA 1983).

KIT Hydraulic Press

KIT developed a manual hydraulic press (figure 22). It was available in two sizes: one has a 17-l capacity and can process 75-120 kg of ffb per hour, while the other has a 28-l capacity

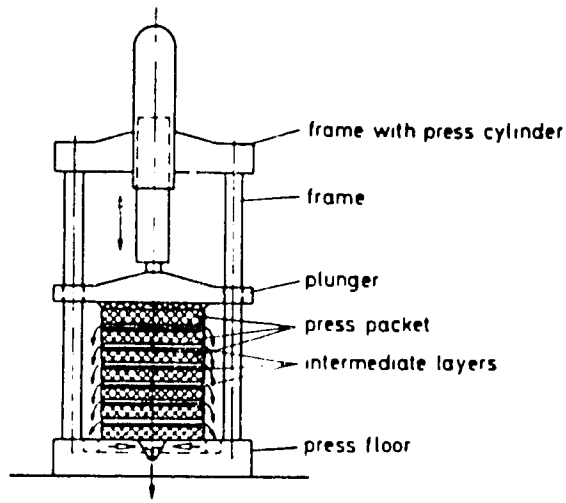

Figure 20. Cross-Section of a Multilayer, Manual Hydraulic Press

Source: Asiedu 1985.

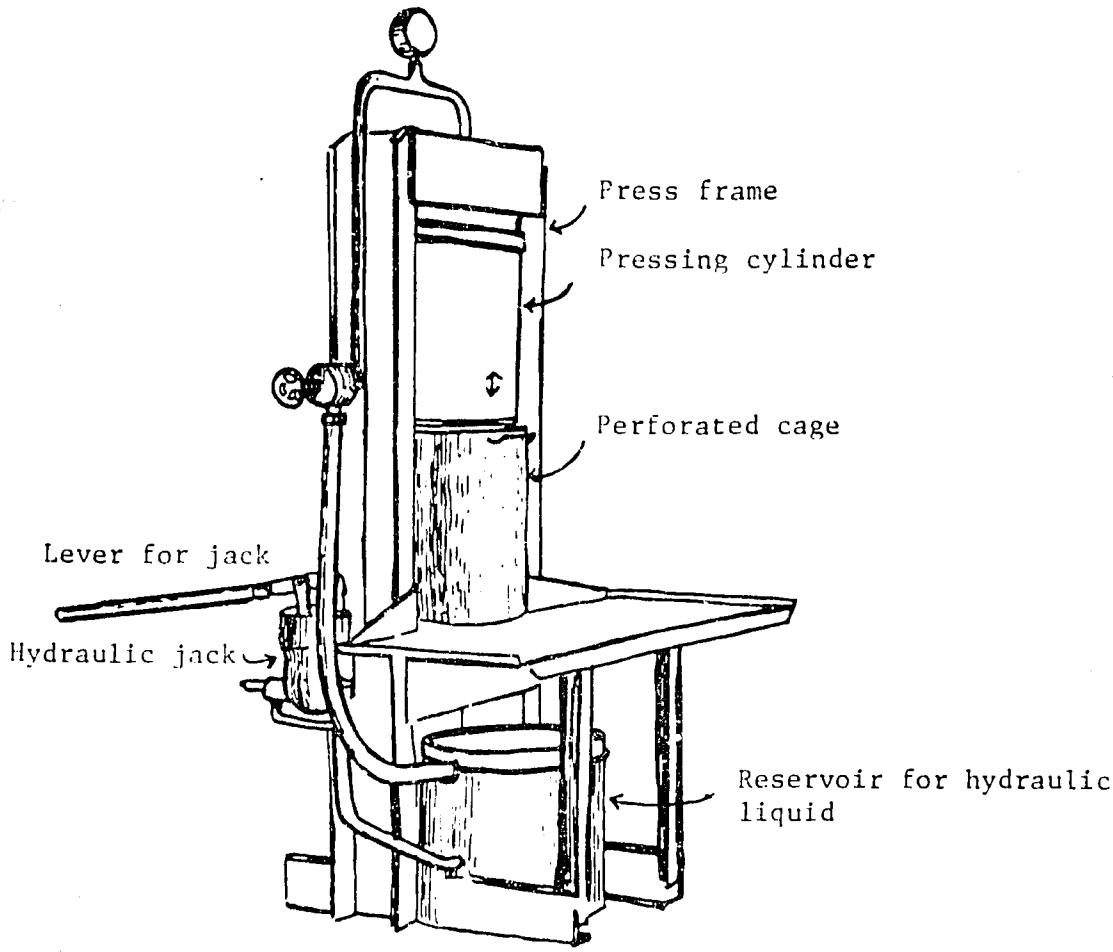

Figure 21. The NIFOR Press

Source: GRET 1984

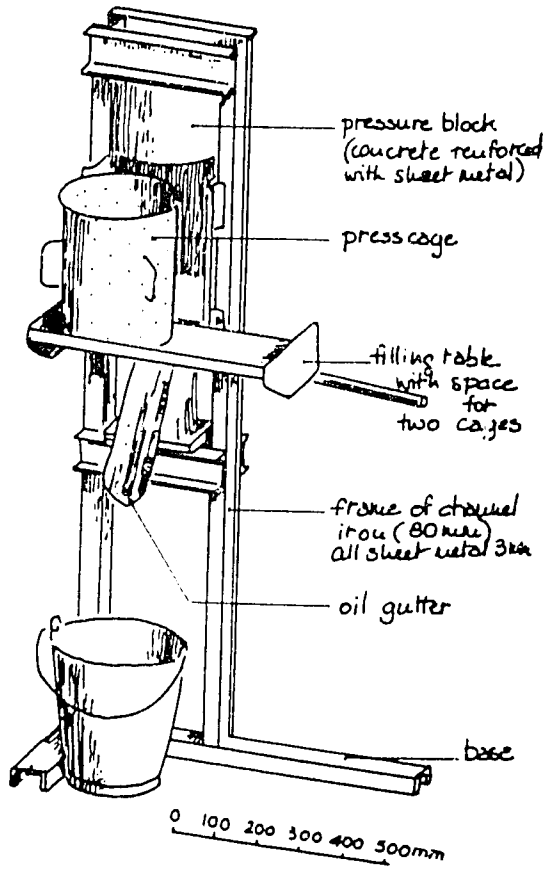

Figure 22. The KIT Manual Hydraulic Press

Source: GRET 1984.

for processing 120-180 kg of ffb per hour. In 1982, the smaller press cost $1,200 and the larger one $1,500 (KIT 1982). The hydraulic jack has an effective force of 20-30 t, exerting a maximum pressure of 40 kg/cm^2. An efficiency of 85% is claimed for small quantities of oil, accounting for oil lost in the sediment (Altes, Heubers, and Merx n.d.). A separate step of macerating or depulping palm fruit is often necessary, which reduces the acceptability of these presses on the Cameroon market (APICA/GATE 1983). This hydraulic press is costly and fragile (Spaenhoven 1986).

CENEEMA Hydraulic Press

CENEEMA developed a discontinuous, manual hydraulic press, which is similar to the Stork manual press, but less sophisticated (figure 23). This press is operated with an 8-10 t auto jack. Pressing and depulping are combined. The manual depulper macerates the fruit through friction. However, the fiber must be manually separate from the kernels after depulping and as a result, villagers often are not interested in this technology (ECA 1983). One or two laborers are required to operate the press.

The CENEEMA hydraulic press can depulp 10 kg of stripped fruit at a time, taking 1 minute for loading and 1 minute for depulping. It can press 40 kg of stripped fruit in one batch (ECA 1983). It has an extraction rate of 15% from Tenera ffb (APICA/GATE 1983). With Dura, the extraction rate from a single pressing is only 9%, so two pressings are recommended (GRET 1984b). Only 3 of these presses have been sold in Zaire and Cameroon (ECA 1983).

RVR Manual Hydraulic Press

RVR, a French firm, has designed a manual, hydraulic press (figure 24). Although initially for peanut oil extraction, it can be adapted for palm oil. The smaller model has an 8-l cage and the larger one is 10.8 liters. The smaller press, model M 78-35 cost 24,000 French francs in early 1981 (GRET 1984b).

European, Motorized Hydraulic Presses

Stork produces small, motorized hydraulic presses and auxiliary equipment for minimills. The Stork Standard Jr. mill can process 600-750 kg of ffb per hour, but is complicated to operate (Van Beuningen, Thijsen, and Rijnsburger 1984).

De Wecker, a firm in Luxembourg, exports a motorized hydraulic press that uses a screw to combine maceration and pressing of palm fruits (APICA/GATE 1983). The de Wecker PM-50 has a capacity of 600 kg of ffb per hour and can either be

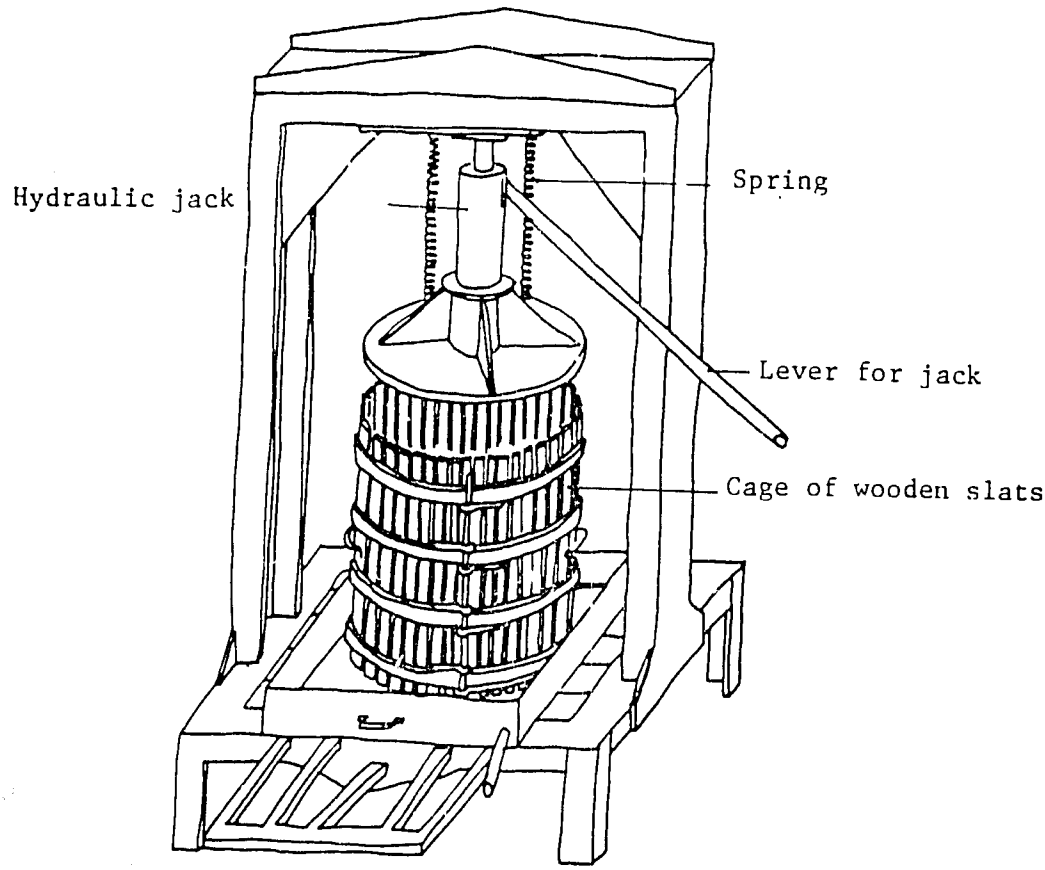

Figure 23. The CENEEMA Manual Hydraulic Press

Source: GRET 1984.

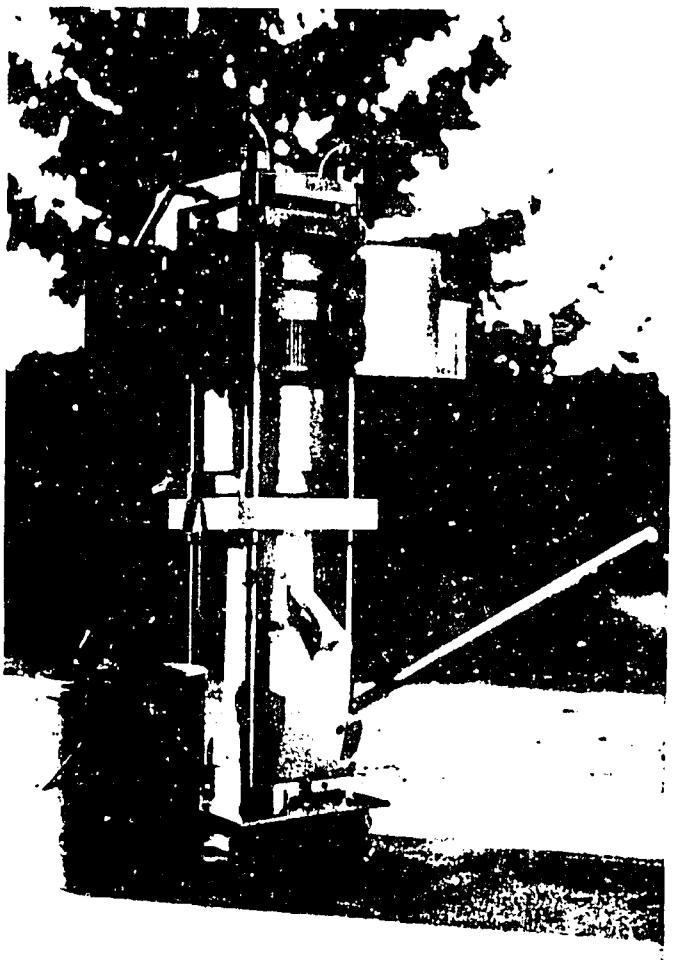

Figure 24. The RVR Manual Hydraulic Press

Source: GRET 1984.

operated by hand or with a motor (GRET 1984). Both the Stork and de Wecker presses cost $8,000-10,000, excluding auxiliary equipment (African Regional Centre for Technology 1986).

An Indian, Motorized Hydraulic Press

AGRICO in India makes a press similar to the TCC design, except that a hydraulic system replaces the spindle operation. The press capacity is 1,000 kg per hour and it exerts higher pressure than the TCC model, 60 tonnes. The AGRICO press has a better extraction rate than the TCC press, 17-18%, and does not require constant labor. Unfortunately, it requires more maintenance and this has led to reliability problems. Hadley and Hadley (1986) visited mills in Ghana that use the AGRICO press and found that three-quarters of them were not operating due to equipment failures.

The following auxiliary equipment is recommended with this press: (1) a mechanical bunch stripper, (2) digester or pounding machine for stripped fruit, (3) clarifier with mechanical pump, (4) dryer for the fiber and kernels, and (5) a separator to remove the kernels. Total costs of this equipment and a building were estimated at $65,000 in Liberia in 1984. With this system, a palm oil mill could process 5,000 kg of ffb in 8-10 hours. It is claimed that the processing cost would be about one-third of the imputed labor cost of the traditional process and the oil recovery would be 40% higher (Wadhwa and Minotra 1984).

Phase Separation Extractors

Phase separation extractors rely on the difference in density between oil and water and use a decanting process rather than pressing or expelling. Examples include the relatively sophisticated Tropic 10 Extractor and the simple, cottage-scale Wax Press.

The Tropic 10 extractor, developed specifically for palm oil, won a silver medal at the Brussels World Exposition on Inventions in 1984 (figure 25). It has a capacity of 500 kg of stripped fruit per day and can be operated by two women. The extractor vat has a capacity of 130 l of cooked, pounded palm fruit and is mechanically inclinable by 15° in both directions to assure emptying of the fruits. Attached rods allow the horizontal axis composed of 3 rows of 6 blades to move in a complete circle. At the same time, the assembly can rotate 60 turns per minute due to two levels of supports and ball bearings. The movement can be motorized for an electric or gasoline engine if a gear reducer and transmission chain are added. The vat and mixing assembly must be made of stainless steel.

Four cooking vats of 60 l capacity are used with the Tropic 10 Extractor -- 2 for heating that amount of water to 80°C and 2 for cooking a similar quantity of fruits for 1.5 hours. Rapid cooking is important to avoid FFA build-up. Buckets are needed

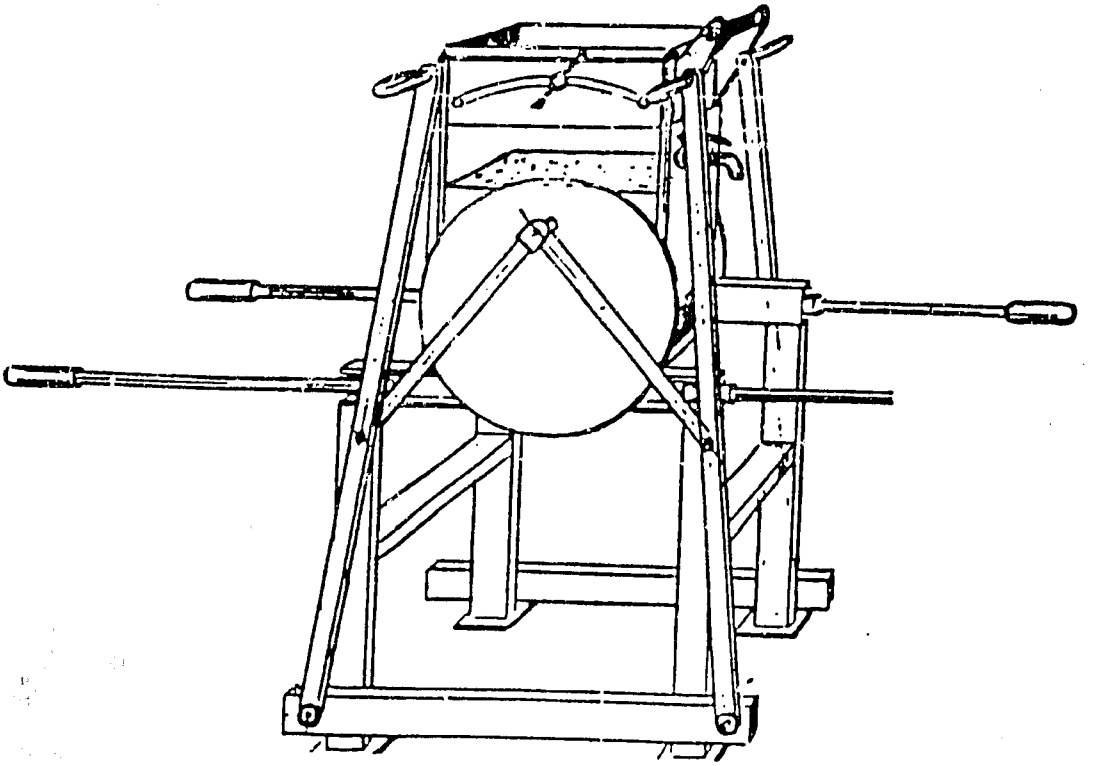

Figure 25. The Tropic 10 Extractor

Source: Ateliers Julien Heine 1985.

for handling the water, fiber, and oil. The first batch of 60 l of cooked fruit is introduced through the strainer into the extractor.

Next, the pulp is mixed for 25-30 minutes without added water, alternately inclining the vat 15° to the left and right for uniform mixing. After that, 60 l of the heated water are poured into the top of the extractor and the fruit is washed for 25 minutes, inclining the vat 10° to each side. While the extractor is left sitting for 5 minutes, the difference in density between the oil and water causes the water to sink below the oil and cellular material.

At this point, the extractor tap is opened and as much oil and the oil that can be poured out easily is removed. Then, the extractor is inclined 80° so that the water and cellular material can be removed for reheating and decanting in the vats. Next, the vat is reversed 80° to allow separate collection of the used water as well as the fibers and kernels. The water is recycled for use that same day to avoid loss of oil. A basket containing the fibers and kernels is immersed in a tank of hot water so that the fibers can be separated by hand. The kernels remaining at the bottom of the basket are then air dried. Finally, the water and cellular material from the full day's processing are left heating on a small fire overnight before being decanted in the morning (Ateliers Julien Heine 1985).

The Wax Press consists of a metal drum with a double bottom containing a hole to receive the axis (figure 26). The wooden axis has 3 steel crossbars. A trap permits removal of fibers and pulp. The assembly rests on a wooden bridge with 2 steel cross bars (Langley 1982).

Auxiliary Equipment for Artisanal Production of Palm Oil

Table 13 summarizes the characteristics of selected artisanal-scale presses for palm oil production. Most of these presses are not adapted for kernel oil extraction due to its paste-like consistency (Laffitte 1987). Since some presses do not depulp palm fruit and the traditional method of pounding is inefficient, auxiliary equipment may be needed for effective use of these presses. Furthermore, pressing speed is not usually the limiting factor in artisanal-scale production (Nwanze 1965). Thus, auxiliary equipment might be needed to reduce bottlenecks in other steps such as cooking or bunch stripping of fruits, and clarification of the raw oil.

Cooking of Palm Fruits

Women are in charge of the cooking steps in artisanal palm oil production in Cameroon. With a press such as the Colin or Caltech that simultaneously depulps the stripped fruit, only one cooking is necessary. If a manual bunch stripper is used, the fruit bunches are cooked before stripped. However, if the fruits

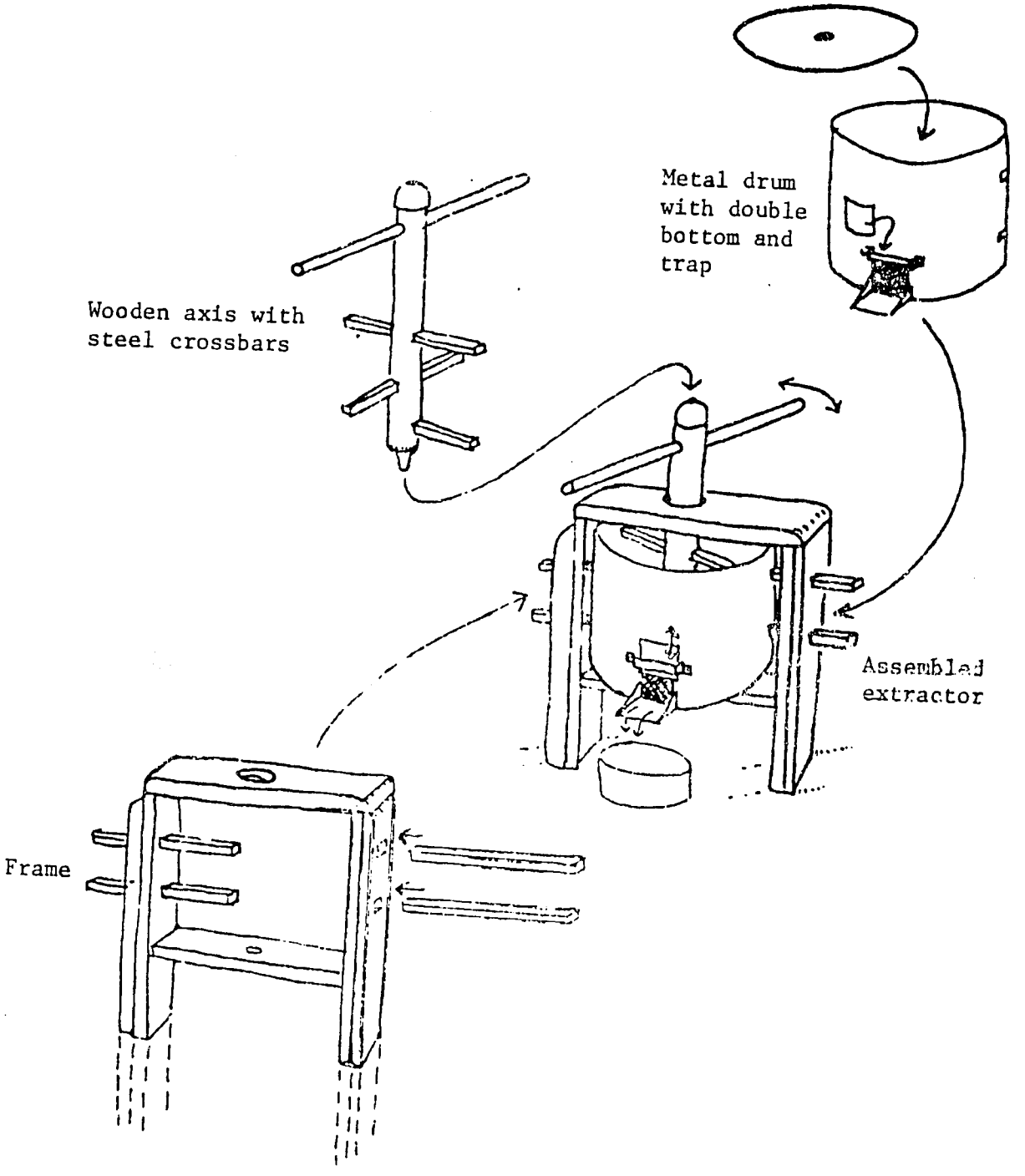

Figure 26. The Wax Press

Source: Langley 1982.

TABLE 13

Summary of Characteristics of Selected Artisanal-Scale Presses

	TYPE OF PRESSES															
	MANUAL, HORIZONTAL EXPELLERS			MOTORIZED, HORIZONTAL EXPELLERS			SCREW-OPERATED BATCH PRESSES				HYDRAULIC PRESSES				PHASE SEPARATION EXTRACTORS	
Criteria	Manual Colin	Manual Horizontal Caltech	Vertical Caltech	Motorized Colin	Motorized Horizontal Caltech	European Models	TCC (Kumasi)	SODIZI (Casamance)	KIT	UNATA 420)	NIFOR (Stork)	KIT	European Motorized Models	Motorized AGRIGO	Tropic 10	Max Press
Fabricated in an LDC	Y	Y	Y	Y	Y	N	Y	Y	N	N	Y	N	N	Y	N	Y
Currently marketed	Y	Y	Y	Y	Y	Y	Y	Y	N	Y	N	N	Y	Y	Y	N
Capital costs	M/H	M	L	H	H	H	L	L	L	L	M	M	H	M	L	L
Availability of spare parts locally	Y	Y	Y	Y	Y	N	Y	Y	N	N	Y	N	N	N	N	Y
Ease of repair	H	H	H	H	H	L	H	H	M	M	L	L	L	L	M	H
Expected lifetime	H	M	M	H	M	H	L	L	L	L	H	M	H	L	M	L
Continuous operation	Y	Y	Y	Y	Y	Y	N	N	N	N	N	N	N	N	N	N
Simultaneous pressing and depulping	Y	Y	Y	Y	Y	Y	N	N	N	N	N	N	N	N	N	N
Ease of use in pressing	M	M	M	H	H	H	M	M	M	M	H	H	H	H	H	H
Adapted for production of other oils	N	N	N	N	N	Y	Y	N	Y	Y	N	N	Y	N	N	N
Production rate	M	M	M	H	H	H	L	L	L	M	M	M	M	H	M	L
Extraction efficiency with Tenera	H	H	H	H	H	H	M[b]	L	M[b]	M[b]	M[b]	M[b]	H	H	L/M	L

Key: H = High
M = Medium
L = Low
Y = Yes
N = No

[a] Some criteria adapted from GRET 1984.

[b] If the pounded pulp is carefully prepared and reheated sufficiently, a high efficiency can be achieved.

are stripped by hand, cooking follows bunch stripping. Two cookings are needed when the equipment does not simultaneously press and depulp (e.g. the UNATA press). In that case, the first cooking precedes pounding or maceration in a digester and the second is before pressing.

Traditionally, recycled metal drums are used in the cooking and the fuel is palm kernels and fiber from the pressed fruit. OPC offers a package of 5 metal drums with stands and handles for CFA 39,000, excluding sales tax (Toukam 1987). That number of drums is recommended for use with a manual Colin or Caltech. However, many buyers of OPC's presses can obtain used metal drums more cheaply from other sources.

The UNATA 4201/KIT system includes 4 sterilization drums and 2 reheating vats that have a capacity of 110 kg of pounded fruit each. The sterilization drums are used for the first cooking, which takes at least 2 hours. They have a perforated false bottom to separate the cooking water from the fruit bunches and a funnel to control the water level (figure 27). The second cooking is done in the reheating vats where the pounded pulp is steamed for 1 hour. Since some oil will leak out of the pulp during steaming, these vats have an oil reservoir and barrier ring (figure 28).

A Manual Bunch Stripper

In Cameroon, the manufacturer of the Caltech presses is producing a simple, manual device for removing palm fruit from the bunches. It is a modification of a design reported by Hartley (1977). The bunch stripper is a hexagonally shaped drum composed of wooden slats (figure 29). After loading the drum with 3-4 cooked ffb (approximately 40-50 kg), the operator turns a crank lifting the drum horizontally on a steel shaft axle and forcing the bunches upward. To avoid damage, the drum must be carefully closed. Next, the operator turns the crank in the other direction. With this motion, the fruits shake loose from the bunches and drop through the slats at the bottom of the cage into a vat. In 3-4 minutes, 80% of the fruits have been stripped from the bunches. Any fruits left attached are then removed by hand as the bunch stalks are unloaded from the drum. This step takes another 2 minutes. The bunch stripper should be cleaned after each use and the crank bearings greased once a month. The vat should be cleaned with a brush and dried (OPC 1985).

The bunch stripper allows processing of fruits the day after they are harvested. By contrast, stripping of fruits by hand would be done over a 3-4 day period, which could result in deterioration of the quality of the fruits. The OPC bunch stripper and vat cost CFA 171,165, excluding sales tax (Toukam 1987). OPC has encouraged sale of the bunch stripper by itself and in a package with its presses, a set of cooking drums, and a clarifier. One bunch stripper would be adequate for a motorized Colin or horizontal Caltech although OPC (1987a) recommends purchasing two.

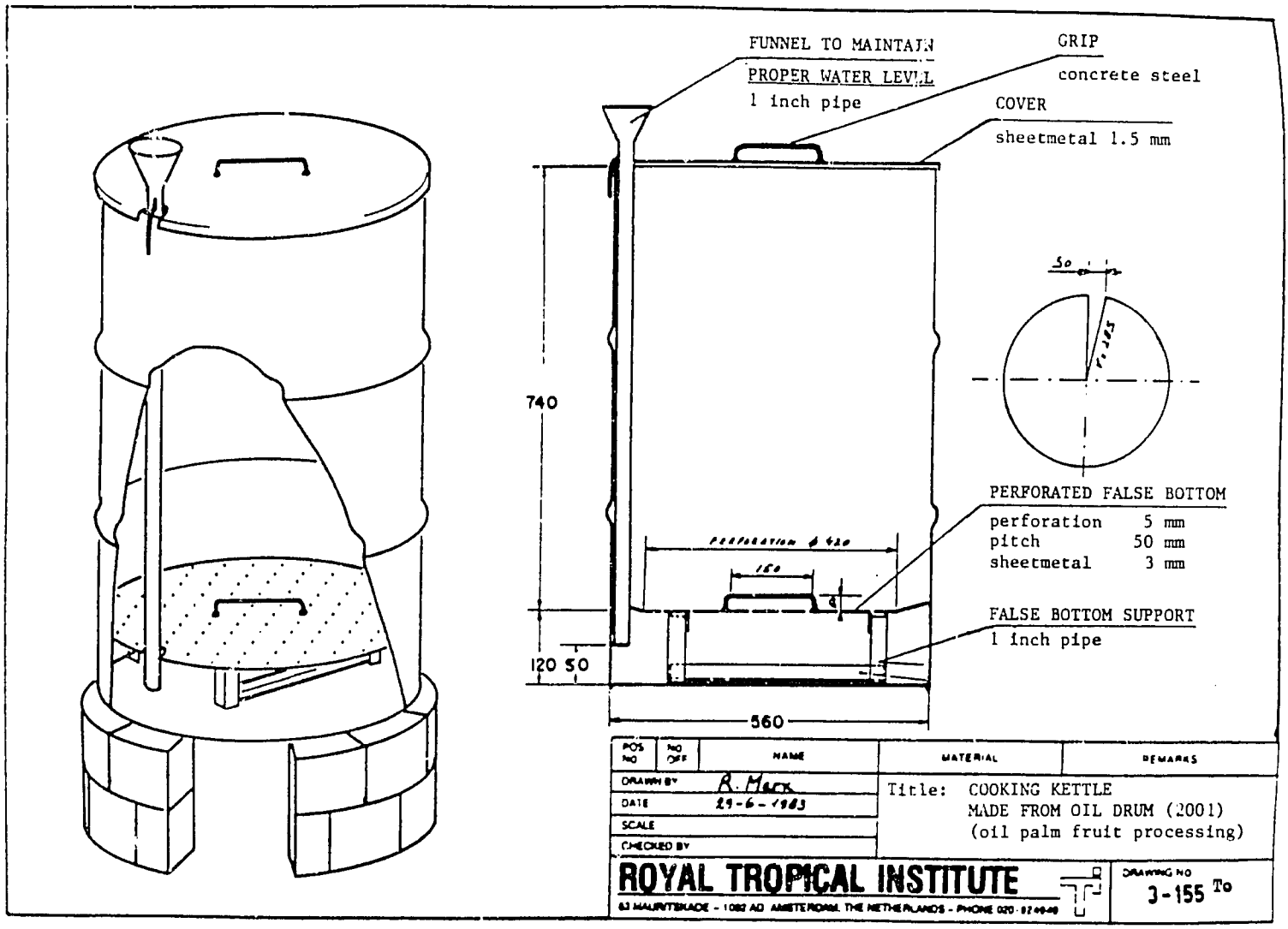

Figure 27. The KIT Sterilization Kettle

Source: Bulk 1986.

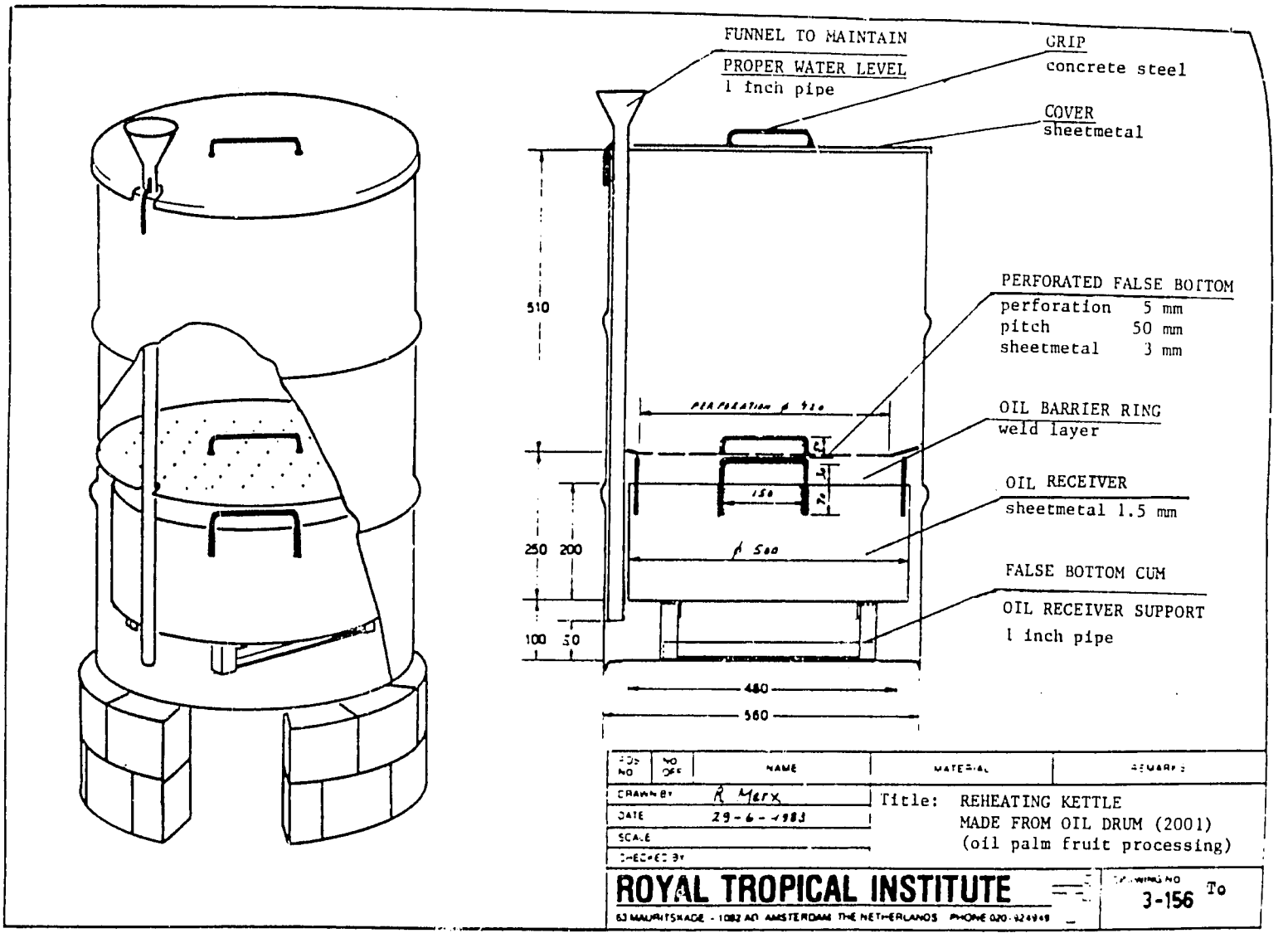

Figure 28. The KIT Reheating Kettle

Source: Altes, Heubers, and Merx n.d.

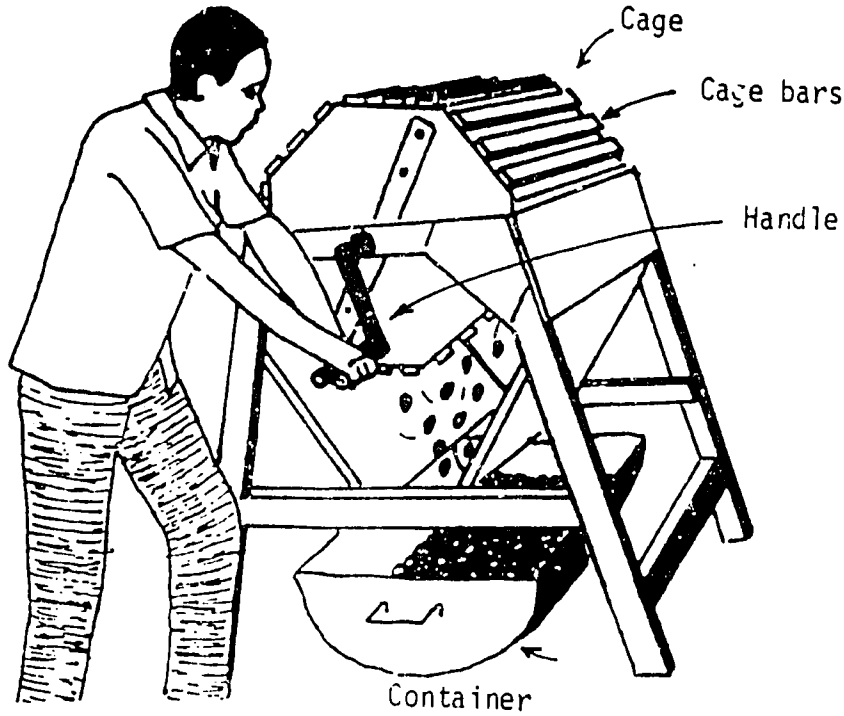

Figure 29. A Manual Bunch Stripper Manufactured in Cameroon

Source: OPC n.d.

The manufacturer recommends a bunch stripper for farmers with more than 3 ha of oil palm (OPC n.d.). The demand for the bunch stripper has been lower than expected. Although 540 kg of ffb can be stripped in an hour with this machine, compared to only 69 kg by hand, the price appears to be too high relative to the benefits. For 3 ha of oil palm, the time savings with the machine would be 114 person-hours of labor with Dura or 343 person-hours for Tenera. At the prevailing daily wage of CFA 800 for casual, agricultural labor, over 1 year this time has a value of CFA 11,400 for the Dura farmer or CFA 34,300 for the Tenera farmer. Just considering capital costs, the payback period for a manual bunch stripper would be 15 years for the Dura farmer and 5 years for the Tenera farmer. Accounting for operation and maintenance costs and the time value of money would make this more unfavorable, but a bunch stripper would be more beneficial for a larger farm or processing unit.

Thus, the bunch stripper does not appear to be a profitable investment for a small farmer. If it were used on a larger plantation or were shared by neighbors or used in service milling, the payback period would be shorter. It is also likely that the device could be produced at lower cost. However, farmers might place a lower value on the labor time of men in their household, which would make the perceived payback period longer. The Catholic mission at Otele processes enough oil palm from its 35-ha plantation to make a bunch stripper profitable, but chooses not to purchase one to avoid putting 5 people out of work (Egli 1987).

The bunch stripper may have another serious disadvantage if the palm stands are distant from the press location and the device is kept near the press for reasons of security. In that case, the whole bunches have to be transported rather than just the stripped fruits. The extra burden of carrying a heavier load may cancel out some of the labor time savings. Also, with the bunch stripper more cooking drums of hot water have to be used per unit of fruit pressed since the whole bunches are cooked.

Pounding of Palm Fruits

The UNATA 4201 and many other vertical screw presses and hydraulic presses require a separate step of pounding or maceration, unlike the Colin and horizontal or vertical Caltechs. With the UNATA system, pounding is done by hand with 3 women using pestles in a single, large mortar. The mortar, made of cement, bricks, or wood should have a capacity of 0.9 m^3 (figure 30). A 30 kg load of fruit can be pounded in 5 minutes (Bulk 1986). If Dura is used, half the kernels should be removed after pounding or, alternatively, all of the remaining fibers from the last pressing can be added. With Tenera, it is not necessary to remove the kernels, but recycling half the fibers from the last pressing is recommended.

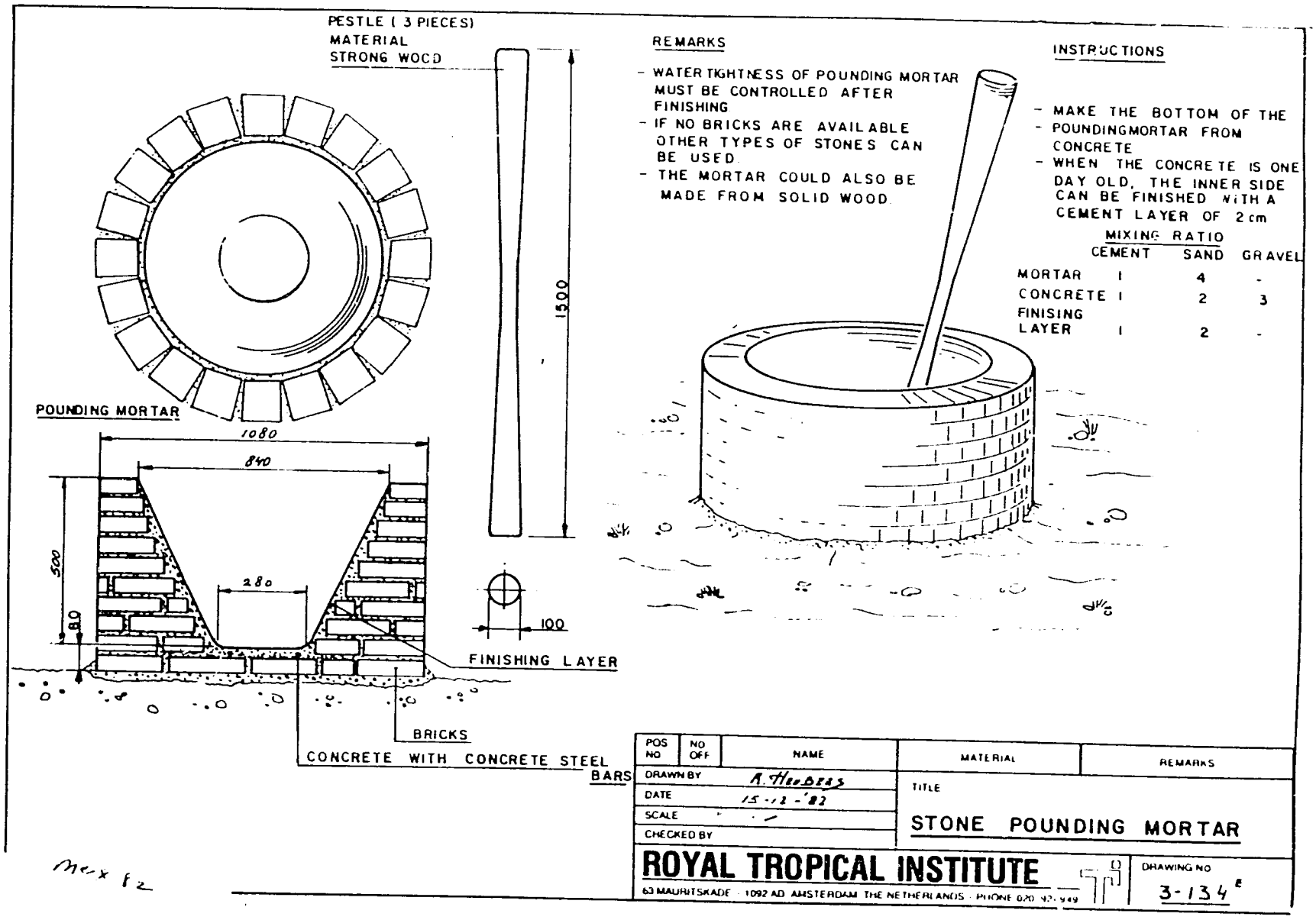

Figure 30. KIT Mortar for Pounding Palm Fruit

Source: Altex, Heubers, and Merx n.d.

Clarification of Raw Oil

After extraction via the traditional process or a press, raw palm oil contains a lot of water, fiber, and sediment. Consequently, it needs to be clarified for greater purity and stability. By the traditional process, clarification is done by boiling the oil in a recycled metal drum. As the water evaporates or sinks below the oil, which is lighter, the clarified oil is skimmed off and the sediment at the bottom of the drum removed. In Cameroon, the sediment is discarded, but it is used for animal feed or "black soap" in Sierra Leone (ECA 1983). Most artisanal-scale palm oil producers in Cameroon use the traditional method of clarification even if they are using improved presses.

Small improvements in clarification technology have been proposed. Spaenhoven (1986) recommends use of rectangular vats 2 m x 1 m x 0.5 m for easier filling and emptying and greater stability. A rectangular KIT design has a lower vessel filled with water to transfer heat from the fire below to the separate, upper part of the vat (figure 31). A tap in the upper vessel is used to remove the water separated from the raw oil. Then, the clarified oil is recovered from the upper vessel.

OPC is manufacturing an improved clarifier in Cameroon, an adaptation of a NIFOR design. The OPC clarifier is a modified metal drum fabricated from locally available parts. It has a metal funnel for pouring the raw oil into the boiling water in the lower half of the drum, an inner reservoir and tap for the clarified oil, an overflow tube, and an escape faucet for the sediment (figure 32). The OPC clarifier is filled with 80 l of water and the fire is lit 1 hour before the cooking of the bunches is done. As the raw oil is heated, it passes through a layer of warm water and floats up into the inner reservoir. It takes 15 minutes to clarify 50 l of oil. After each use, the clarifier should be cleaned with hot water and brushed, and protected from rain (OPC 1985).

Little demand has surfaced for the new clarifiers in Cameroon. The degree of improvement over readily available metal drums is small and potential users find the price difference too large. The OPC clarifier costs CFA 115,000, excluding sales tax. A smaller, simplified model costs CFA 54,045 (Toukam 1987). Even the Catholic mission at Otele, which owns a motorized Colin press and a motorized Caltech, uses ordinary drums for clarification.

APICA has not done any studies to determine whether the upgraded clarifier is financially viable as a separate investment. Evidence indicates that adoption of this clarifier does not have a large influence on the quality of the oil, but it does save some labor time for women, who are responsible for this task (Laffitte 1987). One owner of the new clarifier noted that it must be level to avoid a loss of oil (Goueth 1987).

One of the reasons why artisanal producers rarely bother with palm kernel oil production is the difficulty of cracking the

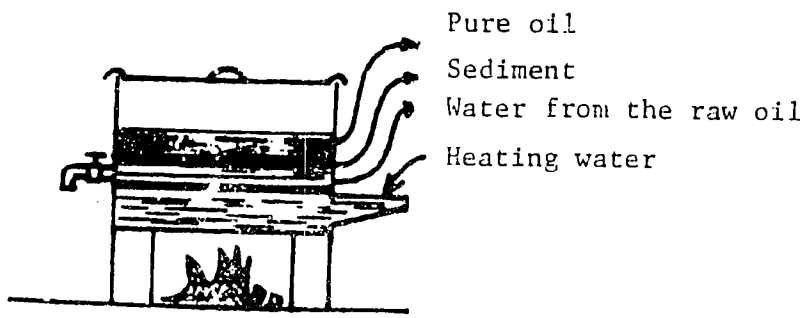

Figure 31. The KIT Clarifier

Source: Altex, Heubers, and Merx n.d.

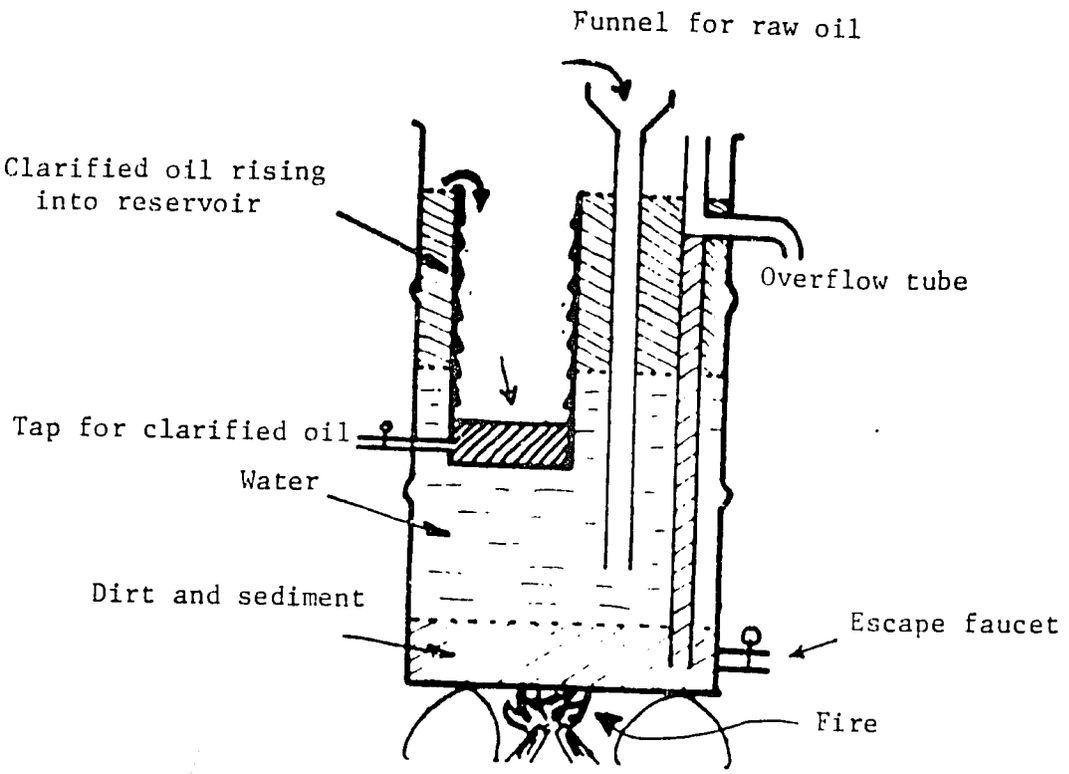

Figure 32. A Clarifier Manufactured in Cameroon

Source: OPC 1985.

kernels. Simple kernel cracker designs exist, both manual and motorized, but are not commercially available in Cameroon (figure 33).

Oil Palm Oil Processing in the Formal Sector

Medium- and Large-Scale Industry

Formal sector industry uses more sophisticated, capital-intensive equipment for preparation and pressing of palm fruits than the presses and auxiliary equipment described above. In addition, medium- and large-scale firms do more extensive refining of the crude palm oil and may also produce palm kernel oil (figure 34). A medium-scale mill has a capacity of 10-20 t of ffb per hour, compared to 20-60 t per hour or more in a large-scale mill. Both medium- and large-scale mills use similar technology and have a similar oil extraction rate (Wood and Beattie 1981).

The first step is ffb reception, transfer, and storage. Horizontal sterilizers are used to steam the bunches in steel tanks to (1) inactivate oil splitting enzymes that increase FFA, (2) loosen the fruit from the bunches, (3) soften the pulp for easier maceration, (4) shrink the kernels and loosen them from the shells, and (5) coagulate proteins and hydrolize gums to prevent formation of colloids or enzymes in the oil.

Step two is the stripping of the fruit from the ffb. Often, a rotary drum stripper is used to generate centrifugal force that lifts the bunches up and shakes the fruits off as gravity causes them to fall. A mechanical feeding device makes the process continuous.

Third, digestion follows to loosen the pulp from the nuts and break the oil-bearing cells in the pulp. The digestor has a vertical centrally rotating shaft with stirring arms; steam heating is applied through the jacketed cylinder.

Pressing is the fourth step and is done in a continuous, horizontal screw press or twin screw press. A twin screw press consists of a pair of main screws rotating in opposite directions in the perforated cage. Medium- and large-scale mills generally have several presses, each with a capacity ranging from 3 to 15 t of ffb per hour (Moll 1987). European firms such as Stork, de Wecker, Speichim, and Krupp manufacture presses of this scale. This equipment is complicated and requires skilled maintenance regularly; downtime for repairs is common (Bek-Nielsen 1971; Hadley and Hadley 1986).

The fifth step is clarification and purification to remove water and contaminants from the crude oil. With a screw press, a relatively large amount of non-oily solids from the palm fruits are present in the crude oil. Then, the finished oil is transferred to storage tanks. If desired, the kernels may undergo further processing for direct sale or oil extraction (Tjeng and Olie 1978).

In Cameroon, medium- and large-scale mills achieve an extraction rate of 19-22% from Tenera bunches, averaging 21%

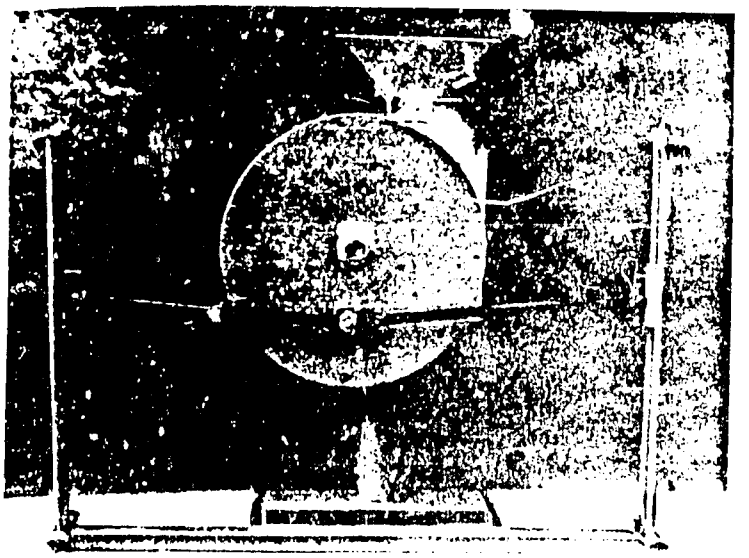

a. de Wecker Manual Model Adapted by KIT

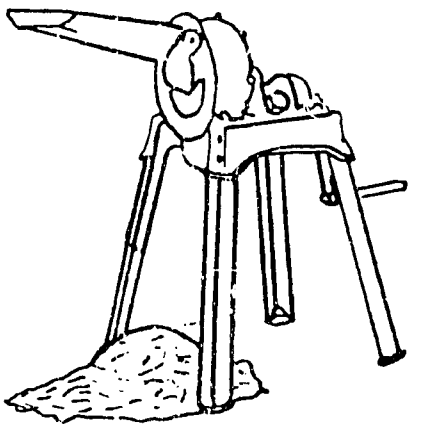

b. A Hand-Operated Model

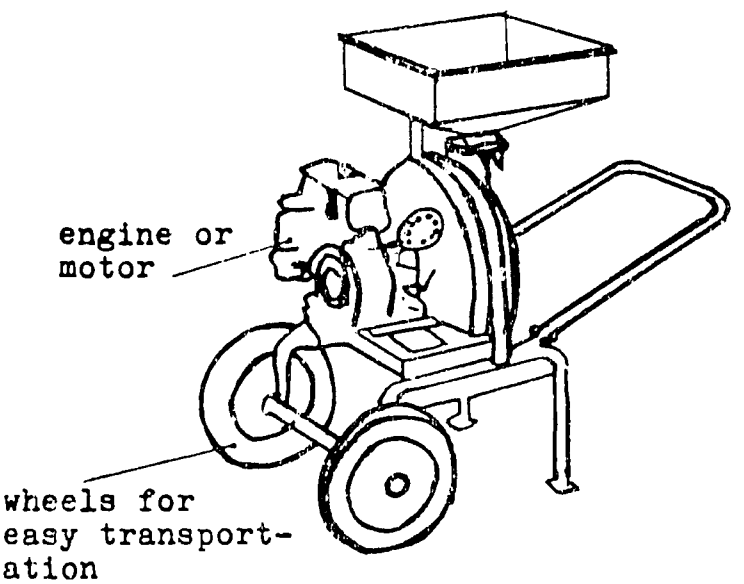

c. SISCOMA Power-Operated Model

Figure 33. Examples of Palm Kernel Crackers

Source: a -- KIT 1982; b and c -- Stevens 1984

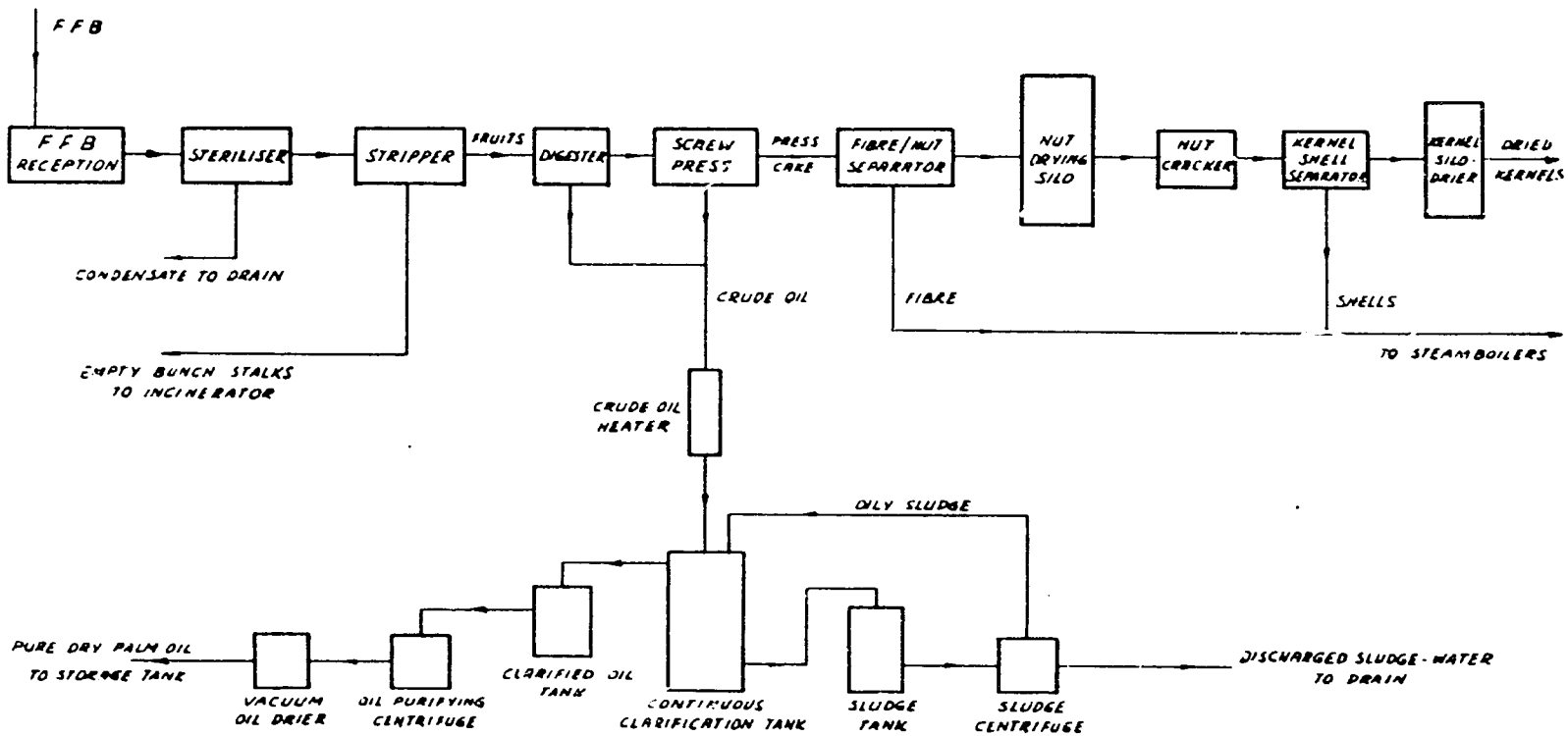

Figure 34. The Medium- and Large-Scale Process for Palm Oil Production

Source: Tjeng and Olie 1978.

(Younoussi 1985). Given an assumed oil content of 22.5% in Tenera, the average extraction rate represents an efficiency of 93%. Figure 35 shows sources of the losses.

Raw palm oil from medium- and large-scale firms has to be clarified and dried before being sold as crude palm oil because it contains water, cell debris, fibers, and dissolved sugars and salts. A motorized, horizontal screw press expels a relatively large amount of non-oily solids. Typically, clarification and purification consists of the use of (1) hot dilution water during pressing to decrease viscosity of the oil, (2) a vibrating screen to separate oily fibers for return to the digester, (3) live steam injection to heat the oil to 95°C, (4) a continuous clarification tank heated to 85°C through steam coils so that the oil floats to the surface and impurities settle out, (5) a centrifuge to reduce dirt to less than 0.01%, and (6) a vacuum oil dryer to decrease the moisture content 0.1% or below (Tjeng and Olie 1978). Clarification should not be confused with the optional, subsequent step of refining.

In addition to palm oil, medium- and large-firms may extract palm kernels from the nuts for direct export or further processing into kernel oil. Mechanized equipment is available for (1) depericarping (separation of fiber from the nuts), (2) drying and cracking the nuts, (3) separation of shells from kernels, (4) kernel drying, and (5) oil extraction.

Depericarping is usually done pneumatically. Since the fibers are lighter than the nuts, air currents blow out the fibers while gravity causes the nuts to fall through ducts. The nuts are then dried for 12-16 hours in a silo dryer to loosen the kernels. Most commonly, roller or centrifugal crackers are used and some models have slots to grade the kernels by size. A hydrocyclone separator uses centrifugal force to push out the heavier shells as the kernels gather in a vortex and leave through an opening at the top with a larger quantity of water. The kernels are then dried again. A small, motorized expeller may be used to extract oil from the kernels (Tjeng and Olie 1978; MacFarlane et al. 1982; Asiedu 1986).

A loss rate below 10% is expected in kernel production, yielding 3.55 kg of kernels per 100 kg of ffb (Wood and Beattie 1981). If processed further, 2.0 kg of kernel oil can be extracted from this quantity of palm fruit (French Ministry of External Relations 1984).

Minimills

Minimills generally have a capacity of 1.0-5.0 t of ffb per hour, using scaled-down versions of the technology used by large industry. A 5 t/hour minimill could process the harvest of 1,670 ha of cultivated Tenera or 3,340 ha of Dura (Blaak 1984a). Typically, minimills have an extraction rate of 9.5% with Dura and 19% with Tenera. They produce crude oil of good quality intended for the local market. However, this oil is unsuitable for export without additional refining in a larger-scale facility (Moll 1987).

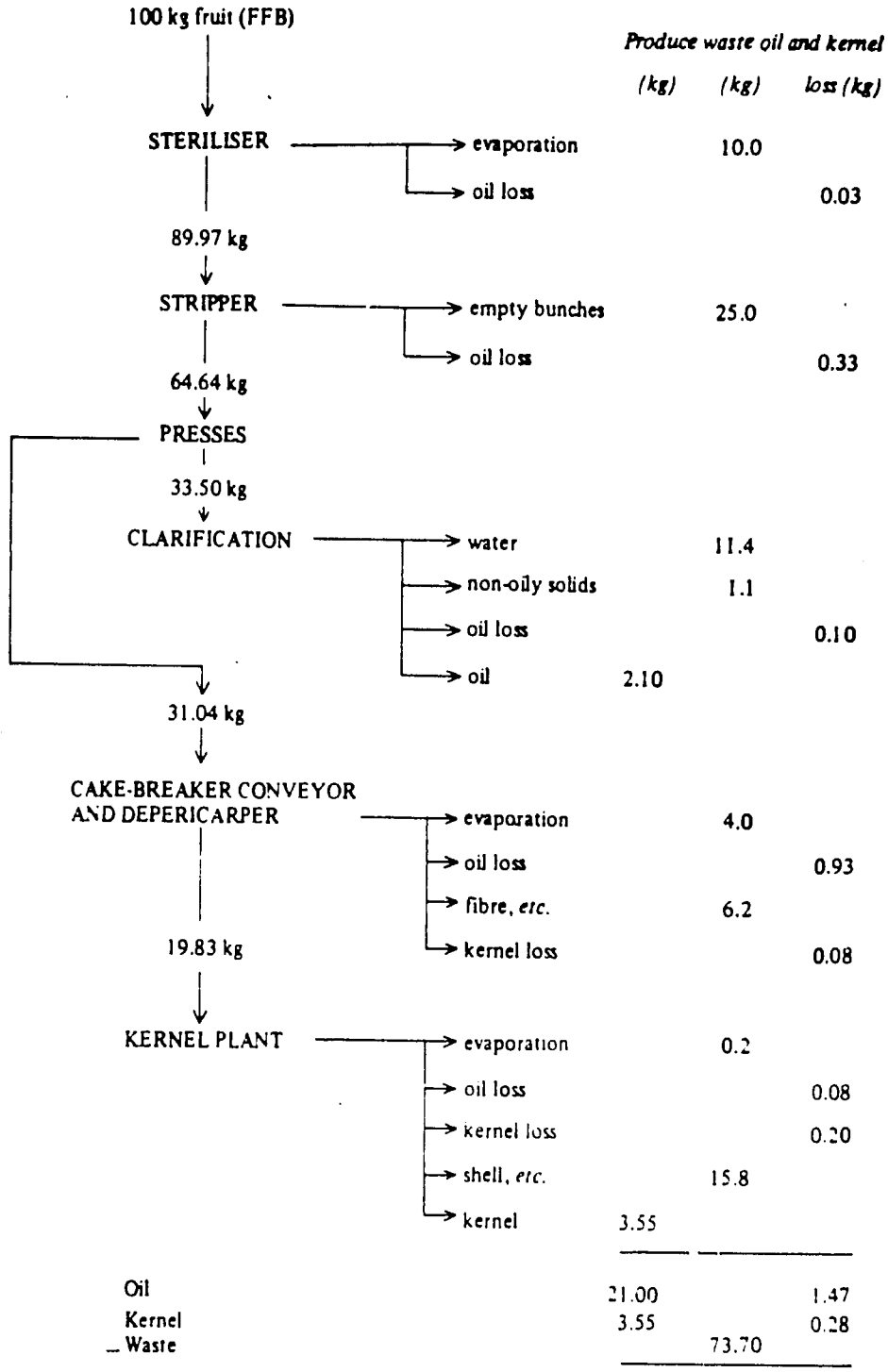

Figure 35. Oil and Kernel Losses in Large-Scale Processing of Oil Palm

Source: Wood and Beattie 1981.

The Pioneer minimill was adopted by Unilever simultaneously with a trend toward larger mills, primarily to defer the high capital costs of a large-scale mill until new plantations reached a steady level of production. During its first 4 years, a plantation is unproductive and for the next 4-5 years after that, a large mill is likely to be unprofitable due to insufficient raw material (Van Looy 1981). Over 100 Pioneer minimills were established in West Africa, mainly in Nigeria and Zaire after World War II (MacFarlane, Swetman, and Coursey 1984).

Pioneer minimills did not require electricity. They relied on hydraulic presses, low pressure boilers, and simple steam machines. Bunches were decorticated manually rather than being treated directly. The centrifugal drying machines were adapted for Dura and are unsuitable for Tenera due to its larger pulp. Around the 1960s, political factors promoted larger scale mills and economic factors shifted technology choice toward screw presses, turbines, and high pressure boilers. By the 1970s, many of the old Pioneer mills were shut down (Van Looy 1981).

Nevertheless, small-scale mills may still be economically desirable in Africa for small plantations or in the early years for large plantations of 5,000-10,000 hectares. A more modern minimill might have the following features:

1. Vertical sterilizers filled by elevator,
2. A bunch stripper with arms rather than a drum,
3. A continuous double screw press,
4. Continuous clarifiers,
5. Centrifugal oil recovery from sludge,
6. A pneumatic system for removal of large fibers,
7. A combined dryer for the nuts and kernels,
8. An elevator or pneumatic feeding system for the dryer,
9. Continuous maceration,
10. A small vertical boiler at low pressure, which does not require water treatment, and
11. A diesel generator if electricity is not available at low cost (Van Looy 1981).

This type of minimill needs diesel fuel or electricity because it would not generate enough waste materials from palm fruit to meet its energy requirements, unlike most large-scale mills. Also, it would consume more steam than a Pioneer mill because it processes the fruit bunches rather than just the fruits. In any case, there is no package plant with the above characteristics currently on the market.

A Dutch firm, International Technological Assistance (ITA) started producing equipment for minimills in 1975. The ITA plant is not a miniature large-scale mill, but an intermediate technology including a manual bunch stripper, continuous digester, electric press, and clarifier. No expensive elevators, pressurized sterilizers, or oil dryer are used. The equipment was designed to have a relatively low capital cost and use local materials and labor as much as possible. The required skills for maintenance are similar to those of an automobile mechanic.

Diesel fuel consumption is low, 2.7 l per t of ffb since presscake waste is used as fuel in the low pressure boiler. One analysis concluded that a 2 t/hour ITA minimill would be most profitable for Dura or Tenera, but it would be uneconomic to process 1 t of Dura per hour. The capital cost of a turnkey 2 t/hour plant was estimated at $240,000 in 1984 (Blaak 1984a).

ITA minimills have been established at Teze in the Northwest Province in Cameroon and also in Sri Lanka and Colombia with donor finance (Blaak 1984b). The objectives of the Teze mill are to (1) increase incomes and employment through local processing of palm oil and encouraging the harvest of fruits that would otherwise rot and the establishment of new plantations, (2) free women's time from the laborious traditional process of palm oil extraction to allow more agricultural production, and (3) increase women's employment in kernel and soap production at the mill. This mill has a capacity of 0.5 t of ffb per hour to serve a plantation area of 100-150 ha, mostly of Tenera. Expected employment at this mill was 1 supervisor, 14 men as laborers including a driver and night guard, 4 women in nut/fiber separation, and 1 woman in soap making. In addition, there would be 5 nursery workers, a task shared by both sexes (Van Beuningen, Thijsen, and Rijnsburger 1984).

The Teze plant began operation in early 1984. It has been managed by an expatriate and a volunteer, but control will eventually be turned over to a cooperative. Palm fruit collection was dependent on a four-wheel drive vehicle belonging to the expatriate and three-quarters of the farmers were unwilling to transport fruit from steep sites more than 2 km to the collection points. Transport costs were high because of the scattered oil palm stands. The rest of the farmers delivered fruit to the mill in return for a higher price (Van Beuningen, Thijsen, and Rijnsburger 1984).

The capacity use rate was supposed to average 55%, with 70% from March to July and less than 30% between November and February. Operation for a full second shift was limited by the capacity of the steaming kettles. The expected extraction rate of 12% for a mixture of Dura and Tenera was not being achieved, but it was not known whether this was due to the low oil content of the fruit or problems with the process. Although the equipment designs were simple, local fabrication standards were low. Other problems encountered include the unreliable electricity supply and a drought that affected purchases of palm fruit (Van Beuningen, Thijsen, and Rijnsburger 1984).

A completely different technology for large-scale extraction of oils is solvent extraction. This process can have an extraction rate of 11% with Dura and 22% with Tenera. Solvent extraction is in commercial use for coconut oil and corn oil among others. However, it is not suitable for small- and medium-scale production because of its high capital costs and the cost of purchasing the solvent.

Solvent extraction has not yet been used for palm oil production, except on a laboratory scale (Moll 1987). For palm oil, the process has technical problems due to the composition of

oil, water, and solids in palm fruit (Asiedu 1986). Palm fruit would have to be stripped from the bunches, sterilized, and digested before applying the solvent. The kinds of digesters currently used in palm oil mills do not shred the fruit enough for effective solvent extraction. The fines would have to be removed through polishing filters, resulting in some oil loss. A technical problem is also posed by the high water/solids ratio in the pulp of palm fruit, 2.0-2.3 compared to 0.13-0.18 for other oilseeds. Because of the high oil content of palm fruit, pressing before solvent extraction would be needed; yet, this would require buying most of the equipment for a conventional large-scale mill. In addition, the solvent evaporator and hexane stripper would have to be made of expensive stainless steel. A steady supply of fresh palm fruit would be necessary because of the time-consuming start-up and shut-down procedures. Other disadvantages of solvent extraction include the explosion potential and the need for sophisticated instrumentation (Tjeng and Olie 1975).

Palm Oil Refining

Crude palm oil may be refined in an integrated mill/refinery or separate facility. In West and Central Africa, most consumers prefer to use crude palm oil in cooking, and the demand for margarine and refined/bleached/deodorized (RBD) oil is small although growing (Moll 1987). By contrast, world trade is increasingly dominated by refined oil from Southeast Asia while crude palm oil from Africa is losing market share.

Refining of palm oil has multiple purposes: (1) degumming to remove phosphatides, resins, and protein fragments; (2) neutralization to reduce FFA; (3) bleaching with Fuller's earth under vacuum to remove color; (4) filtration for removal of bleaching compounds, soaps, and nickel from treatment; and (5) deodorization and polishing. The endproducts of RBD oil may be olein (a liquid at room temperature) or stearin (a solid at room temperature), as well as soapstock (Moll 1987).

Through the mid-1970s, alkali refining was standard for refining. Equipment for alkali refining could be obtained easily and was designed to allow substantial economies of scale (Rowan and Ruths 1975). Typically, a continuous centrifuge process was used and phosphoric acid, caustic soda, and bleaching earth added. Other steps involved washing, filtering, and high temperature steaming of the oil (Wood and Beattie 1981).

More recently, there has been a trend toward physical refining. This process consists of the (1) addition of a small amount of phosphoric acid, (2) bleaching of acid oil via activated earth, (3) deacidification and deodorization at 250°C, and (4) distillation of volatiles (Wood and Beattie 1981). Physical refining offers the advantages of lower cost, higher yield of RBD oil, and reduced emissions of pollutants (MacFarlane, Swetman, and Coursey 1984). It also produces distilled fatty acids of commercial quality. Alkali refining

consumes 1.7-1.8 l of crude oil for every 1.0 l of refined oil produced. With physical refining, the yield ratio is more favorable at 1.1/1.0 (Athanassiadis 1977).

Poor quality crude oil is characterized by high FFA, a high concentration of water and impurities (especially iron which acts as a catalyst for oxidation of fatty acids), and low bleachability. Poor quality oil is difficult and sometimes uneconomical to refine (Hartley and Nwanze 1965) because bleaching earth requirements may increase 400%, color may remain unacceptable after refining, reversion of color and FFA in storage is likely, and increased downtime is caused by fines clogging the filters (Soon and Lan 1985).

The Quality of Palm Oil Produced

Quality requirements differ for crude palm oil on the domestic and export markets. Domestic consumers in West and Central Africa prefer an FFA content of 5-7% and find lower levels result in too bland a flavor. They do not mind levels as high as 35% because they are used to the sharp flavor of palm oil produced by the traditional process (Hadley and Hadley 1986). A moderate degree of oxidation is also preferred for taste reasons. Carotene content is not critical, but concentrations above 1,000 ppm are more nutritious. Bleachability and minerals content are irrelevant to domestic consumers. By contrast, crude palm oil for export should have high bleachability while FFA, carotene, oxidation, and minerals content (especially iron and copper) should all be as low as possible. One oxidation product of carotene, beta ionone, has an odor that is undesirable in food products for developed countries although it is favored in domestic oil in Africa (MacFarlane, Swetman, and Coursey 1984).

Table 14 compares the chemical characteristics of African palm oil produced at the village scale to the current and expected future quality of crude palm oil produced by medium- and large-scale industry and to refined, industrial-scale oil. Oxidation products can result in off-flavors and odors as well as poor bleachability. Tocopherols are a class of beneficial antioxidants that include vitamin E; they are destroyed by heat in processing. Total oxidation (totox) is a better measure than peroxide value, which can be converted into p-anisidine value through heat (MacFarlane, Swetman, and Coursey 1984).

Low concentrations of some contaminants, especially copper, iron, and other metals from equipment wear can catalyze oxidation reactions in palm oil. High FFA content in the oil increases the leaching of iron from equipment and storage tanks (Wood and Beattie 1981). Artisanal-scale oil often has high levels of iron due to the use of worn and poorly cleaned metal drums for cooking and storage. Iron can also be a problem for the large-scale industry, but it can be solved through filtration and use of stainless steel for parts in contact with the oil (MacFarlane, Swetman, and Coursey 1984).

FFA is the most difficult aspect of quality to control in palm oil because it depends on the quality of the fruit selected,

TABLE 14
A Comparison of the Chemical Characteristics of African Palm Oil

	Village- or Small-Scale Production	Medium- and Large-Scale Production		
		Crude Now	Crude In Future	Refined
Free fatty acid (%)	3-50	2-5	2.5 max	0.05
Iron (ppm)	6-50	3-10	3.5 max	1.5
Copper (ppm)	ND	0.05-0.4	0.05 max	0.02
Carotene (ppm)	850-1,400	500-1,600	500-1,600	0
Tocopherols (ppm)	30-560	700-1,100	800	NS
Moisture/dirt (%)	0.3-15	0.2-0.5	0.2-0.5	0.02
Peroxide meq/kg (PV)		0-10	0-4	0.4
Anisidine (AV)	ND	0-6	0-4	NS
Totox (2PV-AV)	ND	0-26	0-12	NS

ND - No data
NS - Not significant

Source: MacFarlane, Swetman, and Coursey 1984, from data of Cornelius 1977.

harvesting techniques, and conditions and duration of transport and storage. Overripe fruit has a higher FFA concentration (Van Beuningen, Thijsen, and Rijnsburger 1984). With bruising or other physical damage, lipase enzyme is released. Lipase results in high FFA, but since it is inactivated at temperatures above 55°C, further deterioration can be prevented after cooking (Asiedu 1986). Palm fruits should be processed within 24 hours of harvesting to avoid deterioration (Moll 1987).

Processing techniques also affect FFA. High moisture content in the oil will lead to increased FFA. Raw oil extracted by foot stomping is unsanitary. The dirt and moisture content remaining in oil from the traditional process depends on the thoroughness of clarification and the cleanliness and dryness of storage conditions. The solubility of water in palm oil increases with temperature and acidity (MacFarlane, Swetman, and Coursey 1984). If presses and storage drums are in disrepair or are not cleaned after each use, the quality of the oil will be lower. Oil boiled in clarification will also be of poorer quality and oil clarified without water can burn (Egli 1987). Pesticide residues are not a problem because they are rarely used in oil palm production. Nor is aflatoxin observed in palm oil (Willems 1985). One owner of the manual Caltech press and an OPC clarifier won first prize for palm oil quality in a national agricultural fair in 1986 (Goueth 1987).

Economic Analysis of Selected Pressing Technologies

Artisanal- and Small-Scale Industry

Table 15 lists the assumptions behind the economic analysis of selected artisanal- and small-scale technologies for palm oil pressing. The numerical results are shown in Table 16, and the profitability displayed in figure 36. A relatively large capital investment is needed for the motorized Colin; manual Colin; motorized, horizontal Caltech presses; and to a lesser extent, the manual, horizontal Caltech. The SODIZI and UNATA presses and the vertical Caltech are the least expensive, and the traditional process requires almost no capital investment.

The traditional process is the most labor-intensive alternative, but it is also the least productive and least profitable. The motorized presses provide about one-third as much employment as the manual ones. Differences in labor intensity among the manual presses are less dramatic, but those presses that require a separate pounding step (UNATA and SODIZI) use 18-27% more labor than the cheapest alternative that accomplishes both steps (vertical Caltech).

At the current price of artisanal palm oil in Cameroon, the traditional process has a negative net present value for processing less than 10 ha of Tenera. Although households carrying out the traditional process are not losing money, they are earning less than the imputed wage of CFA 800 per day for their work. That explains why the traditional process is used

TABLE 15
Assumptions For the Economic Analysis of Artisanal- and Small-Scale Presses

- All prices are mid-1987 values.

- Period of analysis = 10 years. Real discount rate = 15%. Wage for unskilled workers = CFA 800/8-hour day.

- Acquisition costs for fruit (imputed):

  -- Dura -- collected from semi-wild stands requiring little care and where land availability is not a constraint. Harvest and transport labor = 126 person-hours/ha and the value of this time is equivalent to CFA 4.20/kg of fresh fruit bunches (ffb).

  -- Tenera -- market value around large industrial mills = CFA 23/kg of ffb at farmgate. Value at more distant locations where farmers are likely to process their own = CFA 20/kg. Analysis of palm oil processing does not include profits from raising oil palm.

- Yields:

  -- Dura -- 3,000 kg of ffb/ha
  -- Tenera -- 9,000 kg of ffb/ha

- Bunch stripping:

  -- Manual -- 69 kg of ffb/hr, requires 43.5 person-hours/ha of Dura and 130.5 person-hours/ha of Tenera.
  -- Mechanical -- 540 kg of ffb/hour, requires 5.6 person-hours/ha of Dura and 16.7 person-hours/ha of Tenera.

- **Cases Analyzed**

  I. 3 ha Dura processed by farmer or group
  II. 3 ha Tenera processed by farmer or group
  III. 10 ha Dura processed by farmer or group
  IV. 10 ha Tenera processed by farmer or group
  V. 20 ha Dura, half processed by farmer or group and half as service milling
  VI. 20 ha Tenera, half processed by farmer or group and half as service milling.

- Full capacity based on operation of press 4 hours/day, 260 days/year. Capacity is variable for traditional process.

TABLE 15 (cont'd)

- Land requirements minimal and it is assumed that the property is already owned by households.

- Cost of buildings and storage -- CFA 200,000. None for traditional process.

- No licenses or permits required and income taxes are not assessed on artisanal-scale palm oil producers in Cameroon.

- Price scenarios for crude palm oil at press site
  A. CFA 300/l = CFA 334/kg
  B. CFA 200/l - CFA 222/kg
  C. CFA 400/l = CFA 445/kg

  Note: 1 liter = 0.898 kg of palm oil.

- Service milling fee -- 20% of oil pressed, plus gasoline cost if motorized press. Fruits and labor for service milling provided by client.

- Kernels used as fuel rather than being sold or processed by artisanal producers.

- Management costs imputed at CFA 150,000/yr. (including labor supervision and marketing), reflecting part-time nature of production.

- Fuelwood gathered for free. Collection time included in labor cost.

- Gasoline consumption 2.7 l/hour for motorized Colin and 1.8 l/hour for motorized Caltech at CFA 250/liter.

- Water assumed to be free. Hauling time included in labor cost.

- Lubricating oil: 3 l/mo. for motorized Colin and 2 l/mo. for motorized Caltech at CFA 800/liter.

- Transport of product refers to own product plus share of service milling product.

TABLE 15 (cont'd)

Press Operations	Traditional	Manual Colin	Motorized Colin	Manual, Horizontal Caltech	Motorized Horizontal Caltech	Vertical Caltech	UNATA	SODIZI
Capacity use rate (%) based on press operation 4 hours/d, 260 d/y = 1040 h/y)								
Case I	-	5	2	5	3	7	6	11
II	-	14	6	16	8	20	17	32
III	-	16	6	18	9	23	19	35
IV	-	48	19	53	28	68	58	-
V	-	32	13	35	19	45	38	70
VI	-	95	38	-	56	-	-	-
Extraction rate from ffb (%)[a]								
Dura	6.0	10.0	10.0	9.0	9.0	9.0	8.5	7.5
Tenera	11.5	17.0	18.0	16.0	17.0	16.0	15.5[b]	14.0[b]
Unskilled Labor Time Required in Processing 3,000 kg of Palm Fruit[c] (person-hours)								
Bunch stripping	44	44	5.5	44	5.5	44	44	44
Fuelwood collection	15	15	15	15	15	15	20	20
Preparation, cooking, pounding, reheating of fruit, and pressing	226	66	20	73	29	94	120	136
Clarification	45[d]	15	15	15	15	15	15	15
Packaging	10	10	10	10	10	10	10	10
Total person-hours	340	150	65.5	170	74.5	178	209	225
person-days	42.5	19.0	8.5	21.5	9.5	22.5	26.5	28.5

[a] Assuming 550 kg of stripped fruit per tonne of the ffb, and an oil content of 11% of the ffb weight.
[b] With reheating of pressed material and repressing of fibers for recovery of additional oil.
[c] 1.0 ha of Dura or 0.33 ha of Tenera.
[d] Longer time due to greater presence of contaminants.

TABLE 15 (cont'd)

Machinery and Equipment Costs in CFA (delivered)

Traditional:	
Hollowed-out tree trunk	10,000
Manual Colin:	
Expeller	2,968,735
5 used drums for cooking	20,000
1 new drum for clarifier	8,000
Motorized Colin:	
Gasoline-powered expeller	4,107,580
5 used drums for cooking	20,000
1 bunch stripper	171,165
1 new drum for clarifier	8,000
Manual, Horizontal Caltech:	
Expeller	988,711[a]
5 used drums for cooking	20,000
1 new drum for clarifier	8,000
Motorized, Horizontal Caltech:	
Gasoline-powered expeller	1,753,422[b]
5 used drums for cooking	20,000
1 new drum for clarifier	8,000
1 bunch stripper	171,165
Vertical Caltech:	
Expeller	386,545[b]
5 used drums for cooking	20,000
1 new drum for clarifier	8,000
UNATA:	
Press, cement mortar and 3 wooden pestles, and cooking kettles	370,000
SODIZI:	
Press	55,000
5 used drums for cooking	20,000
1 new drum for clarifier	8,000
2 mortars and pestles	10,000

[a] Includes 10% cash discount, excludes tax.
[b] Includes 5% cash discount, excludes tax.

TABLE 15 (cont'd)

- Repair costs
  Motor -- CFA 200,000 for the motorized Colin in yrs. 3 and 8, and CFA 115,000 for the motorized Caltech in yrs. 2, 6, and 9

- Miscellaneous -- CFA 80,000 for the manual and motorized version of the Colin and Caltech expellers, zero for the traditional process, and CFA 40,000 for the others.

- Expected lifetime for all presses = 10 yrs., except for manual and motorized Colin expellers (20 yrs.) and SODIZI press (3 yrs.).

- Replacement of auxiliary equipment:

Cooking drums and clarifier -- yrs. 3, 5, 7, 9	8,000
Bunch stripper (motorized Caltech and Colin) -- yr. 6	171,165
UNATA cement mortar (labor and materials) -- yr. 6	20,000
UNATA: 3 wooden pestles -- yrs. 4, 7	5,000
SODIZI: 2 wooden mortars and pestles -- yrs. 4, 7	10,000

- Replacement of motor:

Colin -- yr. 6	400,000
Caltech -- yrs. 4, 8	230,000

- Replacement of screw in yrs. 3, 5, 7, 9 -- CFA 122,000 for Colin presses, CFA 61,000 for horizontal Caltech presses, and CFA 65,000 for vertical Caltech.

- Replacement of nut and spindle for UNATA in yr. 6 -- CFA 65,000. Replacement of other parts for UNATA in yr. 6 -- CFA 98,500.

- Annual refitting costs for SODIZI press CFA 23,000.

- Replacement of wooden thrust bearings for vertical Caltech each year -- CFA 3,000.

- Salvage value at beginning of year 11.
  Manual Colin -- CFA 984,400 (50% of capital cost less CFA 500,000 for overhaul)
  Motorized Colin -- CFA 1,553,800 (50% of capital cost less CFA 500,000 for overhaul)
  SODIZI -- CFA 13,700 (67% of capital cost less CFA 23,000 for repairs).

Sources: APICA 1982; ECA 1983; OPC various; Hadley and Hadley 1986; Dichter 1987; ENDA 1987; Wiemer and Altes 1987; Altes 1988; Spaenhoven 1988.

TABLE 16

Summary of the Economic Analysis of Artisanal- and Small-Scale Presses (1,000 CFA)

	Traditional	Manual Colin	Motorized Colin	Manual Caltech	Motorized Caltech	Vertical Caltech	UNATA	SODIZI
Capital Costs	10	3,197	4,507	1,217	2,153	614	[illegible]	293
Annual Wages Paid to Unskilled Labor								
I	102	46	20	52	23	54	62	68
II	306	137	61	155	68	162	187	205
III	340	152	68	172	76	180	208	228
IV	1,020	456	204	516	228	540	624	-
V	-	152	68	172	76	180	208	228
VI	-	456	204	-	228	-	-	-
Net Present Value								
I-A	(2,448)	(4,360)	(4,369)	(1,510)	(2,653)	(829)	(928)	(784)
I-B	(3,605)	(4,809)	(4,809)	(1,906)	(3,049)	(1,224)	(1,302)	(1,114)
I-C	(1,301)	(3,933)	(3,933)	(1,118)	(2,261)	(436)	(558)	(457)
II-A	(934)	(14,023)	(15,759)	1,126	(107)	5,051	3,718	2,440
II-B	(7,586)	(3,943)	(4,172)	(1,574)	(2,351)	(913)	(1,140)	(1,271)
II-C	5,659	786	295	2,631	2,116	3,291	2,933	2,408
III-A	(1,308)	(2,300)	(1,325)	98	(878)	749	423	226
III-B	(5,164)	(3,766)	(2,791)	(1,222)	(2,198)	(571)	(824)	(8,741)
III-C	2,514	(846)	129	1,406	430	2,057	1,658	1,316
IV-A	3,738	7,043	5,840	6,932	7,609	7,519	6.548	-
IV-B	(18,436)	(876)	(1,638)	(107)	131	480	(270)	-
IV-C	25,71[illegible]	14,890	13,252	13,907	15,021	14,494	13,305	-
V-A	-	(1,498)	(1,498)	820	(156)	1,471	1,104	827
V-B	-	(3,257)	(3,257)	(764)	(1,740)	(113)	(391)	(493)
V-C	-	256	246	2,389	1,413	3,040	2,587	2,135
VI-A	-	21,591	20,017	-	21,883	-	-	-
VI-B	-	12,089	11,043	-	12,909	-	-	-
VI-C	-	31,008	28,911	-	30,777	-	-	-

Scenario	Traditional	Manual Colin	Motorized Colin	Manual Horizontal Caltech	Motorized Horizontal Caltech	Vertical Caltech*	UNATA	SODIZI
I - A								
I - B								
I - C								
II - A				X		X	X	X
II - B								
II - C	X	X	X	X	X	X	X	X
III - A				X		X	X	X
III - B								
III - C	X		X	X	X	X	X	X
IV - A	X	X	X	X	X	X	X	N/A
IV - B					X	X		N/A
IV - C	X	X	X	X	X	X	X	N/A
V - A	N/A			X		X	X	X
V - B	N/A							
V - C	N/A	X	X	X	X	X	X	X
VI - A	N/A	X	X	N/A	X	N/A	N/A	N/A
VI - B	N/A	X	X	N/A	X	N/A	N/A	N/A
VI - C	N/A	X	X	N/A	X	N/A	N/A	N/A

Assumptions:

A - Current price in Cameroon
B - 33% decrease in price
C - 33% increase in price
I - 3 ha Dura
II - 3 ha Tenera
III - 10 ha Dura
IV - 10 ha Tenera
V - 10 ha Dura + 10 ha service pressing
VI - 10 ha Tenera + 10 ha service pressing

"X" = profitable economically beyond paying wages + manager's salary
N/A = not applicable due to insufficient capacity to process this much fruit at the assumed maximum feasible hours of operation per year

* Manual only

Figure 36. Profitability of Selected Palm Oil Extraction Technologies

so little in a high-wage area like Otele while it persists in areas where little wage employment is available.

At current prices, 10 ha or more of Tenera are required for profitable use of the manual and motorized Colin expellers; they are not profitable for Dura, even to process 10 ha of owner production and 10 ha of service milling. The manual, horizontal Caltech, and vertical Caltech, and UNATA require a minimum of 10 ha of Dura or 3 ha of Tenera for profitability. A motorized, horizontal Caltech can only be justified with at least 10 ha of Tenera. The SODIZI is best used with 3 ha of Tenera and is unprofitable with Dura unless at least 10 ha worth of fruit are processed.

The relative profitability of the presses varies with the scale of operation. At present, none of these presses is worth buying if the owner only has access to 3 ha of Dura. With either 3 ha of Tenera or 10 ha of Dura, the vertical Caltech is most profitable, followed closely by the UNATA press. The best choice given 10 ha of Tenera is the motorized, horizontal Caltech, and then the vertical Caltech. With 20 ha of Dura (half as service milling), the vertical Caltech is best and the UNATA is next best. The motorized, horizontal Caltech is the best choice for 20 ha of Tenera (half as service milling), although the manual or motorized Colin expellers would be almost as profitable.

These findings are quite sensitive to the price of palm oil. If the price falls by one-third, an investment in any of these presses is unwarranted with Dura, and 10 ha of Tenera becomes unprofitable for all but the vertical Caltech and the motorized, horizontal Caltech. Conversely, if the price increased by one-third, there is a turnaround in profitability in many of scenarios. For example, all of the upgraded presses except the manual Colin become economically profitable with 10 ha of Dura. With 3 ha of Tenera, the traditional process; manual and motorized Colin; and mororized, horizontal Caltech turn profitable.

Medium- and Large-Scale Industry

Because of differences in accounting, data supplied by medium- and large-scale firms is generally not directly comparable to figures in an economic analysis of small-scale firms. Nevertheless, some general conclusions can be reached about capital and labor intensities and profitability. Table 17 lists the capital costs of the newest large-scale mill in Cameroon at Idenau. This mill owned by CDC was built in 1984. At an exchange rate of CFA 300 per U.S. dollar, the capital costs amount to approximately $9 million, excluding land and subsequent inflation. Operating costs for this mill are shown in Table 18. In the year ending June 30, 1987, total operating costs were CFA 199,091,000 for production of 9,398 t of palm oil and 2,111 t of kernels. At CFA 328,335/t, gross revenues from oil alone were approximately CFA 3,085,692,330. CDC did not provide an

TABLE 17
Capital Costs of the Large-Scale Idenau Mill

Item	Cost (1000 CFA)
Bunch reception	28,923
Sterilizer station	164,861
Mono rail hoist	6,747
Threshing station	57,516
Press station w/ 2 de Wecker twin-screw presses	112,562
Incinerator	66,156
Cake breaker conveyor	11,435
Depericarper	23,292
Nut drying	44,308
Nut crackers	15,925
Separation of cracked mixture	99,482
Drying of kernels	33,623
Crude oil treatment	17,764
Clarification station	61,770
Clarification sludge treatment	98,757
Effluent recovery	7,787
Palm oil storage	61,636
Steam generation	423,848
Power station	165,634
Water supply and steam mains	74,167
Miscellaneous	145,325
Foundations and building	973,760
TOTAL	2,695,278

Source: Mimba 1987.

TABLE 18
Operating Costs at the Idenau Mill (1,000 CFA)[a]

General Expenses	
Management salaries and expenses	16,614
Supervisory salaries and expenses	7,671
Other supervision - overseas	1,398
Office expenses and clerical staff	10,896
Light, fuel, and water	7,462
Yard maintenance	233
Sanitation	682
Watchmen	2,448
Store keeping expenses	1,783
Indirect cost of labor	16,928
Maintenance and repairs	673
Motor vehicle operation and repairs	8,953
Medical expenses	1,676
Welfare expenses	6,100
Basket allowance	2,030
Attendance bonus	1,827
Subtotal	87,374
Oil Manufacture	
Transport of residues	7,693
Labor in oil manufacturing	13,293
Lab expenses	4,875
Fuel and lubricants	6,401
Oil machinery maintenance	30,412
Mill building maintenance	372
Mill building cleaning	1,412
Mill building water	1,894
Mill building electricity	6,093
Mill yard maintenance	539
Subtotal	
Despatch of oil	14,456
Total revenue expenditure--oil	173,277
Kernel Manufacture	
Labor	3,931
Lab expenses	1,347
Fuel and lubricants	3,155
Kernel machinery maintenance	4,642
Subtotal	13,075
Packing labor	2,523
Packing materials	5,417
Transport to wharf	4,799
Direct cost of packing and despatch	12,739
Total revenue expenditures - kernels	25,814
Total expenditure	199,091

[a]For the year ending June 30, 1987

Source: Mimba 1987

amortization schedule for the capital costs of their plantations and the mill (Mimba 1987).

Total full-time equivalent employment at Idenau is 92 workers: 8 -- management and supervision; 6 -- hourly labor; 8 -- miscellaneous; 6 -- transportation; 7 -- maintenance and repairs; 29 -- manufacturing; 18 -- packing, despatch, and kernel picking; 3 -- lab technicians, 14 -- part-time, unspecified. Employment at a large-scale mill is small relative to the labor required for plantation maintenance and harvesting (Moll 1987).

In the 1986 season, SOCAPALM produced a total of 48,784.5 t of palm oil at 5 mills. Their total costs amounted to CFA 10,039,781,799 (including CFA 1,067,682,115 for plantation maintenance, CFA 1,069,577,454 for harvesting, CFA 235,268,938 for purchase of fruits, CFA 987,120,716 for milling and despatch, CFA 1,374,103,524 for general expenses, CFA 2,976,628,493 for fixed costs, and CFA 2,329,400,559 in depreciation). Since production and inventories were valued at CFA 10,153,061, 891, the company made a profit of CFA 139,592,371 from these operations.

Conclusions

Palm oil processing is an important economic activity in West and Central Africa, generating income and employment for rural producers, and providing a product that matches the tastes of domestic, urban and rural consumers. Palm oil is the principal cooking oil in Cameroon. The domestic industry cannot compete with the production costs of Southeast Asian firms. Consequently, the domestic market is being protected by import restrictions and a price floor above the world market price.

Over the next 10 years, artisanal-scale production of palm oil in Cameroon will have to increase substantially to meet increased domestic demand, unless imports are allowed. Although the large-scale industry is operating at a low capacity use rate, its expansion during this period will be limited by stagnating production of palm fruits on industrial estates.

The traditional process cannot compete economically with simple, improved pressing equipment that can be domestically produced. Small-scale processing of oil palm adds value locally to an agricultural product with a lower capital investment per unit of output than is possible on a large-scale. Where the traditional process is still prevalent, an upgraded technology could significantly increase productivity and incomes in artisanal palm oil production. In many areas, however, the likely buyers would already have had access to a mechanical press prior to their purchase, so it would not result in a large increase in palm oil production.

If a sufficient quantity of palm fruit is processed, the Caltech presses produced in Cameroon are more profitable to use than the expensive, imported Colin-type presses. A manual, horizontal Caltech is warranted for 10 ha of Dura, while the motorized version requires 10 ha of the more productive Tenera variety. With just 3 ha of Tenera, the cheaper, vertical Caltech

is preferable. Because the vertical Caltech is still in the field testing stage, further design adaptations might be needed before commercialization. Equipment that requires a separate, laborious pounding stage such as the UNATA, SODIZI, and TCC presses do not appear to have a sizable market in Cameroon. However, they may have some potential in other countries for very small installations even though they may not be the most profitable alternatives. None of the analyzed presses are warranted economically if the owner has 3 ha or less of Dura. The recommended throughput can be obtained from the owner's palm plantations and/or service milling.

However, certain buyers of improved presses seem to have noneconomic reasons for their purchase. A significant proportion have bought motorized presses even though they were advised that a manual press would be more profitable, given their scale of oil palm production. Since there is a long tradition of using improved, manual presses instead of the traditional process in the Otele-Makak area, a manual press is perceived there as requiring old-fashioned drudgery. By contrast, a motorized press confers social status because it is perceived as a convenient device for a modern farmer. One buyer of a motorized press said he "does not want to suffer again like his father".

Often, the people willing and able to take the risks of adopting an innovation are relatively well-off within their class. In many cases, the buyers have off-farm jobs locally or in Yaounde so that palm oil production is either a sideline or a means of ensuring some income after retirement or upon returning to the village. A gift of a productive asset like an oil press can provide income and an occupation for relatives remaining in the village, without the stigma or dependency creation of cash handouts. It also is tangible evidence of the donor's generosity that can be noticed by neighbors, friends, and other relatives. For these reasons, some manual and motorized Caltechs are now owned by people who only have 2 or 3 ha of bearing Tenera.

Although the profitability of press ownership could be substantially increased by offering service pressing to neighbors, most of the recent buyers want to avoid the extra bother of supervising users or having parts repaired more frequently. Since customers might not use someone else's press with care or might try to avoid full payment for the amount pressed. Some owners report that pressing services are currently in sufficient supply within their vicinity from old, but still functioning Colin presses. In the future, many of these Colin presses eventually will no longer be workable. In fact, several mentioned the ability to avoid depending on their neighbors for service pressing as one of their reasons for buying a press. Palm oil producers could purchase fruits from others, but there is no market at all for Dura and most Tenera farmers prefer to obtain the value added from processing themselves. Another possible explanation for buying a press despite a low expected capacity use rate is the availability of subsidies that reduce the purchase price or provide below-market financing. Also, if inflationary expectations are high, it can be economically

rational to buy any durable goods for future use or resale instead of holding cash.

In two cases so far, buyers have broken parts of the press through misuse. Although OPC does demonstrate use of the press at the time of installation and leaves a manual for future reference, there may be a need for more extensive training. It is also important to ensure that the people who will actually be using the press, rather than just the buyer, participate in the training. Fortunately, the proximity of the Plan Palmeraies Villageoises program headquarters has facilitated good communications between press owners and OPC at Otele when repairs are needed. One lesson learned from this project is the importance of a local institutional connection in ensuring acceptance of an innovation by rural producers and maintaining effective use of the equipment. To reduce downtime, common spare parts should be left with the buyer at the time of purchase, especially where purchasers are scattered or in relatively inaccessible areas.

The demand for the horizontal Caltechs is limited in the Otele area and is less than the original projections for the project. Younoussi (1985) estimates that the demand for horizontal Caltechs is about 24 per year in Cameroon. In fact, this is well above the dissemination rate of 11-12 per year for the original Colin presses when they were being sold at a time when real prices of palm oil were higher than now. The ratio of the cost of the presses to the price of palm oil has deteriorated since then (GRET 1986). The initial cost of a horizontal Caltech is still relatively high for most artisanal-scale producers of palm oil and only a limited amount of financing is now available. Because of its much lower capital costs, the market for the vertical Caltech may be larger.

Places such as Bafang and Bamenda that have a large area of Dura and few existing Colin presses are potential markets; but most palm oil producers there might have difficulty affording a mechanical press. In the areas around the industrial estates, there are reports that the large companies might not renew contracts with smallholders who are relatively far from a mill because of high transport costs. This shift could stimulate the demand for small-scale presses.

The number of presses sold per year could increase if the capital costs could be reduced. One of the reasons for the high production costs is the overhead associated with manufacturing in a recently established, workshop tied to a development assistance agency. One alternative would be to turn over operations to a purely for-profit workshop with a diversified product line. Another possibility would be to maintain the existing workshop, but increase reliance on subcontracting. APICA states that machinery workshops in Cameroon are only interested in activities with a small number of different operations per month and a large gross margin, and that subcontracting is already being done as much as possible. OPC is trying to reduce its overhead by moving to a location with cheaper rent and considering sale of a vehicle. In one respect, OPC's costs are low because management

is provided free by APICA (Laffitte 1987). Another approach would be further design simplification to reduce the capital costs of the Caltech by 30-50% (Spaenhoven 1986).

An increase in artisanal palm oil production from existing stands or new plantations is feasible. Also, some Dura stands need rehabilitation to improve their yields. Sizable quantities of Dura remain unharvested in Cameroon because of the cost of labor for harvesting and processing. It is becoming more difficult to recruit workers for the dangerous task of climbing tall Dura trees to harvest the bunches. Tenera trees are short enough that they can be harvested using hooks on poles. To date, the total area of Tenera grown by artisanal palm oil producers is small, but growing. About 59,000 ha of Tenera have been planted in Cameroon and an additional 30,000-40,000 ha will be required to meet the expected growth in demand (Hornus, Kamga, and Chaillard 1987). Due to the time lag between plantation establishment and peak production, yields will only increase gradually. As a result, the gap between domestic supply and demand is expected to widen. Thus, greater exploitation of Dura or new plantings of Tenera domestically will probably not depress the domestic price of palm oil over the next 15 years. Although palm oil consumers in Cameroon bear the costs of the protectionist policy toward the industry, it is unlikely that the government would end the ban on importing palm oil.

Increasing the price received by artisanal producers for palm oil could boost the demand for improved presses. The government price controls have a negative effect in this regard. Unless they are removed or adjusted sufficiently in the future, production will be dampened in the face of a shortfall. Although artisanal producers could take advantage of seasonal price variations by storing palm oil for 6-12 months, few do so because of immediate needs for cash. Another way to increase the rural producer's share is to reduce inefficiencies in the distribution chain by organizing marketing and transport and improving market access in poorly served areas.

Press sales in Cameroon could be accelerated if a linkage could be made with a government agency or regional development authority. A drawback of working with governments is that the slowness of payments obliges firms to finance the government program. By expanding to serve neighboring countries, OPC could sell as many as 50-60 palm oil presses per year (Laffitte 1987). OPC has received an order for 5 Caltech presses from the World Bank-financed ITURI project in Zaire. The Altech Co. fabricated one motorized Caltech press in France for an organization in Guinea. In 1988, APICA will be completing a market study for the Caltech in Benin, Togo, Ivory Coast, and Guinea-Conakry. This study will identify organizations that might be interested in disseminating these presses and the needs of village groups involved in palm oil production (including credit, installation and repair services, and training). OPC will then consider alternatives for producing and distributing the presses. Due to trade restrictions and tariffs, potential press buyers in other countries might be better off if the equipment could be

manufactured domestically. In that case, OPC could license use of the design and provide technical assistance to other manufacturers.

REFERENCES

African Regional Centre for Technology. 1986. "Improvement of Traditional Food Processing, the Example of Palm Fruit." African Technodevelopment 5, No. 1: 4-6.

Altes, Frans Korthals; R. Heubers; and Richard Merx. 1986. "La Production de Huile de Palme." UNATA-Presse No. 4 (February): 2-9.

Altes, Frans Korthals; R. Heubers; and Richard Merx. 1986. Unata Presse No. 1 (May): 1-10.

Altes, Frans Korthals; R. Heubers; and Richard Merx. n.d. Systeme KIT de Fabrication de l'Huile de Palme Ou Village. Amsterdam: Royal Tropical Institute (KIT).

Altes, Frans Korthals. 1986. Mission Sur la Transformation des Produits Agricoles au Togo: Introduction de Systemes Manuelles Ameliorees de Transformation d'Oleagineux. Amsterdam: Royal Tropical Institute of the Netherlands (KIT).

Altes, Frans Korthals (Royal Tropical Institute). 1988. Personal communication.

Anonymous. 1982. "Les Huileries en Afrique Noire Francophone." Europe Outremer. No. 629-630: 41-53.

APICA. 1982. Etude Compare des Couts et Revenues de Deux Processus d'Extraction d'Huile de Palme: le Processus Traditionnel et le Processus Ameliore Avec Unite Villageoise d'Extraction d'Huile de Palme. Douala, Cameroon: Association Pour la Promotion des Initiatives Communautaires Africaines.

APICA. 1986. Rapport d'Etude du Pressoir Caltech. Douala, Cameroon: Association Pour la Promotion des Initiatives Communautaires Africaines.

APICA/GATE. 1983. Etude de Factibilite d'un Programme de Reparation des Pressoirs a Huile de Palme de Type Colin au Sud-Cameroon. Douala, Cameroon: Association Pour la Promotion des Initiatives Communautaires Africaines.

APICA/PPV. n.d. Vivre du Palmier a Huile. Douala, Cameroon: Association Pour la Promotion des Initiatives Communautaires Africaines/Plan Palmeraies Villageoises.

Asiedu, J. 1986. Processing and Physical Chemical Properties of Tropical Products. Pfaffenweiler: Centaurus-Verlagsgesellschaft.

Ateliers Julien Heine. 1985. Tropic 10 Extracteur d'Huile de Palme, Liege, Belgium, unpublished.

Athanassiadis, A. 1977. "Refining and Segregation of Palm Oil." Oleagineux 32: 173-178.

ATI. 1984. "Project Plan: Palm Oil Extraction Units/Tools Enterprise." (Grant No. 84-01). Washington, D.C.: Appropriate Technology International.

Bek-Nielsen, B. 1971. "Installations Pour l'Obtention de l'Huile de Palme et des Palmistes et Leur Influence Sur la Qualite." Oleagineux 26: 635-643.

Bek-Nielsen, B. 1980. "Aspects Techniques de l'Huile de Palme en Vue de Sa Commercialization." Oleagineux 35: 155-159.

Bek-Nielsen, B. 1983. "Previsions Pour la Consommation et le Prix de Revient a Long Terme de l'Huile de Palme." Oleagineux 38: 161-174.

Berger, K. 1980."Qualite de l'Huile de Palme et Utilisation des Produits Finis." Oleagineux 35: 213-216.

Bielenberg, Carl. 1985. "Project Visit Report: Cameroon Palm Oil Extraction Units." Washington, D.C.: Appropriate Technology International.

Bielenberg, Carl. 1986a. Report on the Vertical Caltech Press. Washington, D.C.: Appropriate Technology International.

Bielenberg, Carl. 1986b. Trip Report: Cameroon Palm Oil Production Units. Washington, D.C.: Appropriate Technology International.

Blaak, G. 1984a. "The Economic Aspects of Operating the ITA Village Palm Oil Mill in West Africa." In FAO 1984.

Blaak, G. 1984b. "Processing Oil Palm in a One Ton FFB ITA Oil Mill." In FAO 1984.

Bradley, Floudia (U.S. Department of Agriculture, Agricultural Research Service). 1987. Personal communication.

Bureau d'Etudes Codescam. 1975. Projet de Creation des Palmeraies Villageoises Dans le Department du Nyong-et-Kelle. Yaounde, Cameroon: Ministre de l'Economie et du Plan.

Cameroon Ministry of Agriculture. 1980. "Cameroon: Current Situation et Potentialites de l'Agriculture." Europe Outremer No. 605: 12-15.

CDC. 1984. Etude du Marche des Huiles Vegetales au Cameroon ROC-Inter-SCET-Cameroon Pour le Compte de la CDC. CAMDEV. Prepared for Cameroon Ministry of Planning.

Cheshire, P. 1965. "The Market for Oil Palm Products With Particular Reference to the United Kingdom Market." In TPI 1965.

Commodities and Trade Division, FAO. 1984. "Palm Oil and Palm Kernel Oil in the Context of the World's Fats and Oil Economy." In FAO 1984.

Cornelius, J. 1977. "Progress Towards International Standards for Crude Palm Oil." In International Developments in Palm Oil. London: Tropical Products Institute.

Country Report: Cameroon. 1984. In FAO 1984.

Donkar, P. 1979. "A Hand-Operated Screw Press for Extracting Palm Oil." Appropriate Technology 5, No. 4: 18-20.

ECA. 1983. Traditional Palm Oil Processing: Women's Role and the Application of Appropriate Technology. Addis Ababa: United Nations Economic Commission for Africa.

Egli, Pere Urs (Plan Palmeraies Villageoises). 1987. Personal communication.

ENDA. 1985a. "Accas Action Casamance." Technologies et Participation. 1 (August) 4-5.

ENDA. 1985b. "Presse Artisanale a Huile de Palme." Environnement Africaine No. 85 (December): 1-9.

ENDA. 1987. Personal communication.

Ender, Gary. 1985. Malaysia's Production of Palm Oil With Projections to Year 2000. Washington, D.C.: Economic Research Service, U.S. Department of Agriculture.

Fairbarn, E. 1965. "Practical Problems of Selling Palm Oil and Palm Kernels." In TPI 1965.

Fanguin, J. 1984. "Considerations Particulieres Dans la Conception des Huileries de Palme." In FAO 1984.

FAO. 1982. Report of the First African Small-Scale Palm Oil Processing Workshop at NIFOR Benin City, Nigeria. Rome: Food and Agriculture Organization of the United Nations.

FAO. 1984. "Proceedings of the Second African Palm Oil Processing Workshop and the Consultation on the Constitution of the African Oil Palm Development Association." Rome: Food and Agriculture Organization of the United Nations.

FAO Investment Centre/IBRD. 1986. Cameroon: Planteurs Villageoise Dans le Sous-Secteur Palmier a Huile et Hevea: Revue Sous-Sectorielle. Rome: Food and Agriculture Organization of the United Nations/World Bank.

Foreign Agricultural Service, U.S. Department of Agriculture. 1987. "World Oilseed Situation and Market Highlights." Circular Series FOP 8-87 (August).

French Ministry of External Relations, Cooperation, and Development. 1984. Memento d'Agronome. Paris: Government of France.

Geddis, A. 1976. "The Low-Cost Oil Palm Mill Project in Sierra Leone." Appropriate Technology 3, No. 2: 6-7.

Glover, David. 1987. "Increasing the Benefits to Smallholders from Contract Farming: Problems for Farmers, Organizations and Policy Makers." World Development. 15: 441-448.

GRET. 1984a. Development Rural Du Sud Cameroon: Diffusion d'Unites Villageoises d'Extraction de l'Huile de Palme. Paris: Groupe de Recherche et d'Echanges Technologiques.

GRET. 1984b. Le Point Sur l'Extraction des Huiles Vegetales: Les Presses a Huile. Paris: Groupe de Recherche et d'Echanges Technologiques.

GRET. 1986. Projet de Fabrication du Professoir Caltech a Huile de Palme au Cameroon. Paris: Group de Recherche et d'Echanges Technologiques.

Hadcock, Michael. 1982. "Optimizing the Extraction and Recovery of Palm Oil Using Small-Scale Processing Equipment." In FAO 1982.

Hadcock, Michael. 1984. "Small-Scale Processing Equipment -- Its Need, Opportunity and Economic Viability." In FAO 1984.

Hartley, C. 1977. The Oil Palm. London: Longman.

Hadley, Charles and Barbara Hadley. 1986. Palm Oil Sector Review. Accra, Ghana: Technoserve.

Hartley, C. and S. Nwanze. 1965. "Factors Responsible for the Production of Poor Quality Oils." In TPI 1965.

Hazlewood, Peter and Douglas Stotz. 1981. Draft Environmental Profile on United Republic of Cameroon. Tucson: Arid Lands Information Center, University of Arizona. Prepared for the U.S. Man and the Biosphere Program.

Hornus, P.; F. Kamga; and C. Chaillard. 1987. "La Recherche Agronomique et le Development de la Culture du Palmier a Huile au Cameroun." Oleagineux 42: 307-315

Hyman, Eric. 1987. Choice of Technology and Scale in Coconut Processing in the Philippines. Washington, D.C.: Appropriate Technology International.

IBRD. 1986 Price Prospects for Major Primary Commodities. Washington, D.C.: World Bank.

IBRD. 1987. World Development Report, 1987. Washington, D.C.: World Bank.

International Monetary Fund. 1987. International Monetary Statistics. Washington, D.C.: IMF.

Jasperson, H. and J. Pritchard. 1965. "Factors Affecting the Refining and Bleaching of Palm Oil." In TPI 1965.

King-Akerele. 1982. "Traditional Palm Oil Processing -- Women's Role and the Application of Approved Technology." In FAO 1982.

KIT. 1983. Review of Agricultural Programs and Advisory Activities, 1982. Amsterdam: Royal Tropical Institute of the Netherlands.

Laffitte, Alain (APICA). 1987. Personal communication.

Langley, Phillip. 1982. Technologie Appropriee Pour Ameliorer la Situation de la Femme au Cameroon. vols. 1 and 2, Douala, Cameroon: Pan African Institute for Development.

LeMerre, J. 1971. "La Recolte du Palmier a Huile: Formation des Coupeurs a la Faucille." Oleagineux 26: 607-608.

MacFarlane, N. et al. 1982. "Extraction of Oil From Palm Kernels Using a Small-Scale Expeller." In FAO 1982.

MacFarlane, N; A. Swetman; and D. Coursey. 1984. "Comparison of Traditional and Industrial Palm Oil." In FAO 1984.

"Malaysia Sees Palm-Oil Sector Threatened by U.S., EC Moves." 1987. International Herald Tribune (September 28).

Merx, Richard. 1982. Oil Palm Processing Trials in the Gambia in October and November 1982. Amsterdam: Royal Tropical Institute of the Netherlands.

Merx, Richard. (KIT). 1987. Personal communication.

Mfoula, Lucien Elang (SOCAPALM). 1987. Personal communication.

Mimba, Mr. (Cameroon Development Corporation). 1987. Personal communication.

Moll, H. 1987. The Economics of Oil Palm. Wageningen, Netherlands: Centre for Agricultural Publishing and Documentation (PUDOC).

Moutsi, Joseph. 1986. Rapport d'Essai des Presses UNATA/CALTECH. Douala, Cameroon: Outils Pour les Communautes.

Moutsi, Joseph (APICA). 1987. Personal communication.

Nwanze, S. 1965. "Semi-Commercial Scale Palm Oil Processing." In TPI 1965.

Odumosu, O. 1984. "Industrial Applications of Palm and Palm Kernel Oils in Lever Brothers Nigeria." In FAO 1984.

Ollagnier, M. and J. Gascon. 1965. "La Selection du Palmier a Huile a l'IRHO," In TPI 1965.

Onochie, B. 1982. "A Welcome Address By the Director of NIFOR." In FAO 1982.

OPC. 1985. Guide d'Utilisation de l'Unite d'Extraction d'Huile de Palme. Douala, Cameroon: Outils Pour les Communautes.

OPC. 1986. Le Pressoir Caltech Vertical. Douala, Cameroon: Outils Pour les Communautes.

OPC. 1987a. "Pressoir Caltech." Douala, Cameroon: Outils Pour les Communautes.

OPC. 1987b. La Rentabilite Economique de l'Unite Villageoise d'Extraction d'Huile de Palme. Douala, Cameroon: Outils Pour les Communautes. (mimeograph)

OPC. n.d.(a) How to Use Your Palm Oil Extraction Unit. Douala, Cameroon: Outils Pour les Communautes.

OPC. n.d.(b) Palm Oil Extraction Unit: Fast and Simple for Greater Productivity From Our Plantation." Douala, Cameroon: Outils Pour les Communautes.

Otto, Jonathon. 1987. "Processing Food Oils in Africa: A Question of Scale." VITA News (January): 12-14, 21.

Perry, Edward (ATI). 1987. Personal communication.

Petitpierre, G. 1984. "Valorisation des Dechets d'Huilerie de Palme." In FAO 1984.

Poujade, R. 1974. "Les Huileries de Palme en Afrique. Oleagineux 29: 521-524.

Princen, Yvon and Bob Spaenhoven (UNATA). 1987. Personal communication.

Puga, Emmanuel and David Ngankam. 1983. Etude Sur les Causes de Chutes Dans le Grimpage Au Palmier et les Moyens de les Prevenir. Douala, Cameroon: Association Pour la Promotion des Initiatives Communautaires Africaines.

Richards, Z. 1984. "Economic Effectivity of Agro-based Industries with Particular Reference to Palm Oil Processing." Proceedings of the Second African Palm Oil Processing Workshop and the Consultation on the Constitution of the African Oil Palm Development Association (AFOPDA). Rome: Food and Agriculture Organization of the United Nations.

Rowan, C. and D. Ruths. 1975. Palm Oil Steam Refining Techniques, Operating Responses, and Economics." Oleagineux 30: 423-428.

Schwitzer, M. 1980. "Utilisations Non-Alimentaires de l'Huile de Palme." Oleagineux 35: 261-267.

Singh, Balwinder and O. Okereke. 1984. "Economics of Processing Palm Oil and Palm Kernels in Anambra State of Nigeria." Journal of Research, Punjab Agricultural University. 21:590-596.

SOCAPALM. 1986. Tableau d'Exploitation. Cameroon: SOCAPALM.

Sodeci-Terres Rouges. 1985. Bilan et Perspectives des Sous-Secteurs Heveas et Palmiers a Huile ---.

Soon, Wong and Lee Sook Lan. 1985. "Some Preliminary Quality Aspects of Crude Palm Oil with Reference to Refined Palm Oil During the High and Low Crop Season." Bangi, Malaysia: Proceedings of Workshop on Quality in the Palm Oil Industry.

Spaenhoven, Robert. 1986. Rapport de la Recherche Comparee Sur Les Pressoirs a Huile Pour la Production Artisanale d'Huile. Ramsel, Belgium: Union for Appropriate Technology Assistance (UNATA).

Spaenhoven, Robert. 1988 (UNATA). Personal communication.

Stevens, Yvette. 1984 Improved Village Technology for Women's Activities: A Manual for West Africa. Geneva: International Labour Office.

Strauss, Robert. 1985. Project Visit Report: APICA/OPC Oil Press Project. Washington, D.C. Appropriate Technology International.

Tjeng, T. and J. Olie. 1975. "Why Solvent Extraction of Palm Oil is Not Recommended." Oleagineux 30: 523-528.

Tjeng, T. and J. Olie. 1978. "Palm Oil Mill Process Description." Planter 54: 527-556.

Toukam, Jean-Bosco (APICA). 1987. Personal communication.

TPI. 1965. The Oil Palm: Papers Presented at the Tropical Products Institute Conference. London: Tropical Products Institute.

Traut, G. 1982. "Use of Colin Press for Traditional Palm Oil Processing." In FAO 1982.

Ugoh, Sylvester. 1982. "Opening Address...." In FAO 1982.

United Nations. 1986. World Population Prospects: Estimates and Projections as Assessed in 1984. New York: United Nations, Population Studies Report 98.

U.S. Department of State. 1985. Background Notes: Cameroon. Washington, D.C.: Government Printing Office.

Van Beuningen, Coen; Theo Thijsen; and Jaap Rijnsburger. 1984. Village Palm Oil Mill, Teze, Cameroon: Report of the Evaluation Mission, June 1984. The Hague: HIVOS/WASTE. (Humanistisch Institut Voor Alternatieven in Samenleving en Techniek).

Van Looy, R. 1981. "Les Mini-Huileries de Palme." Oleagineux 36: 147-151.

Wadhwa, Ravi and Pushp Minotra. 1984. "Comparing the Efficiency and Economics of Wadhwa Palm Oil Plant vs. Manual Method of Processing Palm Oil." In FAO 1984.

Wiemer K. and Frans Korthals Altes (KIT). Personal communication.

Willems, M. 1985. "Palm Oil: Quality Requirements from a Customer's Points of View." Journal of the American Oil Chemists' Association 62: 454-459.

Wohlfahrt, N. 1969. "Clarification de l'Huile de Palme Brute." Oleagineux 24: 699-701.

Wood, B. and T. Beattie. 1981. "Processing and Marketing of Palm Oil." Planter 5:379-400.

Yebga, Norton. 1987. (OPC). Personal communication.

Younoussi, Boukary. 1985. Rapport d'Etude de Marche Pour les Unites Villageoise d'Extraction d'Huile de Palme. Douala, Cameroon: Association Pour la Promotion des Initiatives Communautaires Africaines.