PN-ABA-943

POSTHARVEST INSTITUTE FOR PERISHABLES

ADAPTIVE DESIGN OF A

ZEOLITE-WATER SOLAR REFRIGERATOR

by

Douglas A. Asbe

Cooperative Agreement AID/DAN-1323-A-00-5093-00
USAID Bureau for Science & Technology
Office of Agriculture

GTS Report.

Research Report No. 8

September 1986

University of Idaho
College of Agriculture
in cooperation with
United States Agency for
International Development

PK-ABA-943
58162

Adaptive Design of a Zeolite-Water Solar Refrigerator

A Thesis
Presented in Partial Fulfillment of the Requirement for the

Degree of Master Of Science
Major in Chemical Engineering

in the
University of Idaho Graduate School
by

Douglas Alan Asbe
September, 1986

Authorization to Submit

Thesis

This thesis of Douglas Alan Asbe for the Master of Science degree with major in Chemical Engineering and titled "Adaptive Design of a Zeolite-Water Solar Refrigerator," has been reviewed in final form and approved, as indicated by the signatures and dates given below. Permission is now granted to submit final copies to the Graduate School for approval.

Major Professor David C. Drown Date 9-29-86

Committee Members _____ Date _____

Robert L. Ackley Date 5/11/87

Department Administrator Roger A. Korn Date 6/5/87

Walter R. Tinney Date 6/23/87

GRADUATE SCHOOL FINAL APPROVAL AND ACCEPTANCE:

Graduate School Dean Arthur A. Fletcher Date June 24, 1987

Abstract

A need for a crop refrigeration system exists in some developing countries. A successful refrigeration system would need to be inexpensive enough for small scale farmers to afford, and of simple construction. It should be dependable, require little maintenance, and should use an energy source which is readily available. An absorption system powered by the sun was developed and fills this need.

Several prototypes for a solar powered refrigerator were built, utilizing natural occuring zeolites and water. Zeolite properties pertaining to the refrigeration process were also studied.

Aluminum irrigation pipe was used to make an absorption refrigeration system based on the ability of zeolites to absorb large amounts of water. A design was developed which minimizes construction difficulties and costs. The final design combines the three functions of an absorption refrigerator: generator (collector), condenser and evaporator into one length of straight or bent pipe. Up to 760 BTU's of cooling were supplied by each 20-foot length of pipe per day with a daily insolation of 2300 BTU. Temperatures were maintained between 63° and 45° F in the refrigerated box when ambient temperatures reached over 100° F.

TABLE OF CONTENTS

Section	Page
Signature page	ii
Abstract	iii
Table of Contents	iv
List of Tables	vi
List of Figures	vii
INTRODUCTION	1
BACKGROUND	2
THEORY	3
ZEOLITES	6
LAB EXPERIMENTATION	8
Materials: lab experimentation	8
Methods: lab experimentation	11
Results: lab experimentation	12
Discussion: lab experimentation	20
PROTOTYPE TESTING	24
Materials: prototype testing	24
Manifold System	24
Single tube design	31
Methods: prototype testing	38
Leak Testing Methods	38
Cooling Measurement	40
Results: prototype testing	41
Discussion: prototype testing	43

CONCLUSIONS 55

RECOMMENDATIONS FOR FUTURE WORK 57

Future Lab Experimentation 57

Future Work on Existing Prototypes 58

BIBLIOGRAPHY 62

LIST OF TABLES

Table 1 Third Prototype Data for August 43

LIST OF FIGURES

FIGURE		PAGE
1	Zeolite Solar Refrigerator	4
2	Lab Collector	9
3	Lab Apparatus	10
4	Temperature -vs- Time (saturated zeolite) .	13
5	Temperature -vs- Time (dehydrated zeolite)	14
6	Vapor Pressure -vs- Temperature (Heating and Cooling Cycle) . . .	15
7	Vapor Pressure -vs- Temperature (1/4 " Saturated Zeolite)	17
8	Water Adsorbed (25 Degrees C)	18
9	Water Desorbed (83 Degrees C)	19
10	Water Adsorbed -vs- Temperature (18-Hour Cycle)	21
11	Water Desorbed -vs- Temperature (6-Hour Cycle)	22
12	Manifold System Lab Scale Single Tube Prototype	25
13	Collector (Manifold System)	26
14	Aluminum Manifold	28
15	Aluminum Joints	29
16	Single Tube Design	32
17	Third Prototype	35
18	Refrigerator Tubes (Third Prototype) . . .	36

19 Pressure -vs- Temperature (Collector Temperature Aug. 26) . 39

20 Cooling Accomplished (per aluminum tube) . 45

21 Cooling -vs- Collector day temp. (per Al tube) 46

22 Cooling -vs- Collector day temp. (per Fe & Cu tube) 47

23 Percent Improvement (Actual cooling to predicted) 49

24 Cooling -vs- Collector night temp. (per Al tube) 51

25 Cooling -vs- Collector temp. drop (per Al tube) 52

26 Cool Box Temperatures (Beginning midnight Aug. 26) 53

INTRODUCTION

In May, 1985 the Postharvest Institute for Perishables (PIP) initiated a project to develop an inexpensive method of refrigeration for use in developing nations. The adsorption refrigeration system utilizing naturally occurring zeolite and water has been shown by D.I. Tchernev (1) and F. Meunier(2) to be useable and successful, but the costs for the systems currently on the market are high. Tchernev's Zeopower Company sells a zeolite solar refrigerator with a capacity to cool two cubic feet for $500.00 with an estimated 2000 BTU/day cooling load. The project funded by PIP is oriented toward the production of a cooler with a much larger cold volume (100 cubic feet with a loading capacity of 6000 BTU or more) which the people in developing countries could construct themselves. The refrigerator would provide short term crop storage thus retarding food spoilage.

The zeolite solar powered refrigerator shows potential for use in areas where sunshine is consistent, humidity is high, and dependable sources of electricity or fossil fuel may be rare. In these regions a farmer or group of farmers would build a zeolite solar powered refrigerator to remove field heat from crops prior to transportation to market. Such a refrigerator would need to be large enough to hold several days' harvest and cool the perishables from ambient temperatures in the 90s to 40° Fahrenheit. It should also be dependable, economical, of simple construction and operation

and not prohibitively expensive.

Several zeolite water adsorption refrigeration systems utilizing three-inch diameter pipe were devised. Prototypes were built to study the problems of construction, economy, and overall performance of a system constructed entirely from pipe. Experiments on the zeolite itself to determine water adsorption characteristics were also performed to aid in design sizing and to evaluate potential performance in various climates.

Experiments on the zeolite show good potential for performance in tropical areas, and technical feasibility of the pipe design concept. The zeolite experimentation showed the potential for cooling capacity of up to 300 BTU's per square foot of solar collector for each day cycle if temperatures in the solar collector over 190° F. are reached. Only 160° F. was attained in the collector during testing in Moscow Idaho, and cooling rates of up to 250 BTU's per square foot were measured.

During the course of designing the prototypes, a unique design was conceptualized, and tested. The new design combines the three components of the refrigerator collector, condenser and evaporator into one straight pipe.

BACKGROUND

The idea of a solar powered zeolite adsorption refrigerator is not new. D. I. Tchernev published a paper in

1979 describing a zeolite solar refrigerator(1). His first model had been in operation since 1977 with no upkeep, and produced two pounds of ice each day for each square foot of solar panel, for a cooling rate of 286 BTU's per square foot. A Frenchman, F. Meunier(2), also has done research on solar refrigeration using a zeolite solar panel and water. His tests, one including a cooling volume of 7' x 8' x 8' with 290 square feet of collectors, maintained ice production of 1.85 pounds of ice (265 BTU's) per square foot of solar collector surface. These systems both used a flat plate metal collector to hold and heat the zeolite; the solar collector was then attached to a metal condenser and evaporator. The model by Meunier utilized valves to control water vapor flow and shutters to help regulate solar collector temperature. Both models by Tchernev and Meunier produced freezing temperatures; to achieve this they had to use large solar panels holding a large amount of zeolite and relatively small evaporator sections.

THEORY

The zeolite solar refrigerator exploits the ability of zeolite to adsorb different amounts of water at different temperatures. A schematic diagram of this type of solar refrigerator is illustrated in Figure 1. The system consists of the zeolite filled solar collector (A), an exterior air cooled condenser (B), and a cold storage evaporator chamber

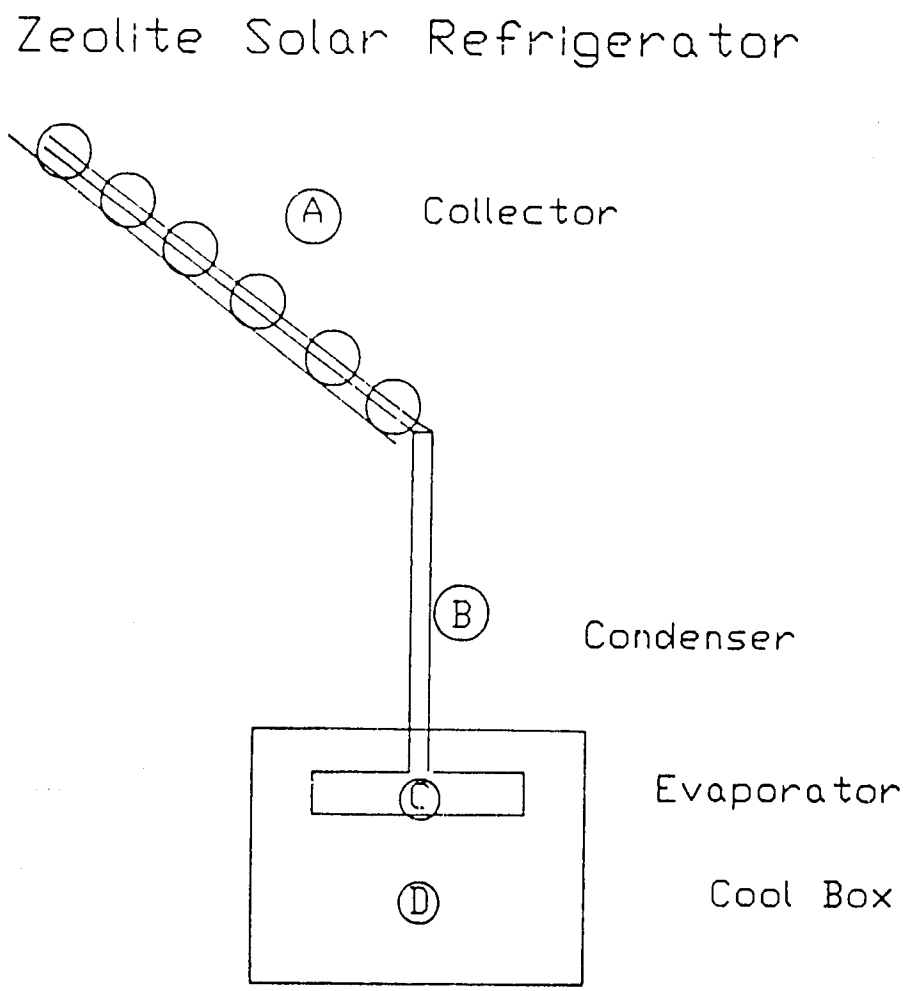

Figure 1

Zeolite contained in the collector (A) is heated by the sun driving off adsorbed water which condenses in condenser (B), and collects in evaporator (C). At night the zeolite cools and begins adsorbing water from the evaporator. The energy needed to evaporate the water comes from the heat contained in the insulated cool box (D).

(C) which is located inside the cool room (D). During the day the sun warms the solar collector and zeolite, driving the adsorbed water from the zeolite. This water vapor is then condensed in an air cooled condenser (a piece of copper pipe in previous designs) and drips into a storage box or evaporator section. At night the zeolite cools and begins adsorbing water vapor from the system. The water vapor is replaced by the evaporation of water in the storage box, now an evaporator. When the water evaporates it obtains its latent heat of evaporation from the sensible heat of the main bulk of the water. In this way one pound of evaporated water can cool 20 pounds of water from 100 to 50° F. Like all refrigeration systems, the working fluid (water in this design) must be completely sealed from the atmosphere, and only water vapor and liquid water can be in the system for efficient operation.

ZEOLITES

All the zeolite used was donated to the project by Teague Mineral Products of Adrian, Oregon. It is of the Clinoptilolite variety and is mined in the Homedale, Idaho area. The size classification of the particles was 4 X 8, which means that all the particles are smaller than 1/4 and larger than 1/8 inch in diameter. The zeolite was analyzed to have the following weight percents of these compounds:

SiO_2	67.40%
Al_2O_3	13.20
Fe_2O_3	2.54
CaO	1.88
MgO	0.24
SO_3	0.04
K_2O	5.59
Na_2O	0.80

Zeolites are a family of minerals with many varied uses. The term "zeolite" is Latin for "boiling stones", and was given to the mineral by Fredrick Cronstedt in 1756 to describe their ability to give up water when heated(4). The unique property of zeolite not only to absorb water but other gases, liquids, and heavy metals has led to the use of natural zeolites for in waste water treatment, radionuclide removal, landfill stabilization, ion-exchange resins, molecular sieves, and solar heating and cooling(5).

Volcanic ash deposits falling into saline alkaline lakes formed what are now the largest deposits of zeolites. They are among the most abundant silicates found in sedimentary deposits, and occur in more than 40 countries (4). The

zeolite itself is an infinite three-dimensional crystal of aluminosilicate with alkali and alkaline earth cations present. They have this basic formula:

$$M_{2/n}O*Al_2O_3*XSiO_2*YH_2O$$

M - alkali or alkaline earth cation
n - valence of M
X - number from 2 to 10 (depending on zeolite type)
Y - number from 2 to 7

The first group of ions ($M_{2/n}O$) are regarded as the exchangeable cations, the second group $Al_2O_3XSiO_2$ are the structural cations and provide the support for the crystal. The waters of hydration (Y) are those measured after the zeolite has been dehydrated of all loosely bound water. This loosely bound water usually accounts for 10 to 20 percent by weight of the dehydrated zeolite and is the water which makes this refrigeration system work. Clinoptilolite, the zeolite used in this study, has M cations of potassium and sodium, a value of 10 for X and 6 waters of hydration. Teague Mineral Products sell its zeolite for $100 per ton or $0.05 per pound.

The project was divided into two phases. The first phase was to evaluate the zeolite for the properties needed for solar refrigeration. The second phase was the design, construction, and testing of several prototye models.

LAB EXPERIMENTATION

Materials: lab experimentation

Bench scale tests to evaluate zeolite adsorption characteristics were conducted with a lab apparatus as shown in Figures 2 and 3. A hot water bath heated by two 1000 watt heating elements was used to heat a tube filled with zeolite. The temperature of the agitated water bath was kept at 180 ^{o} F. The zeolite heating tube was similar to those used in the solar collector -- a 9-inch length of 3-inch aluminum irrigation tubing, sealed at both ends with aluminum plugs. The plug on the top of the tube had several ports for thermocouples and the connection to the condenser. Two thermocouples, one at the center of the zeolite bed and the other halfway between the center and the outer edge were used. A glass tube served as the condenser, and a graduated cylinder was used for the evaporator. The water vapor pressure was measured with an electronic pressure transducer.

Lab Collector

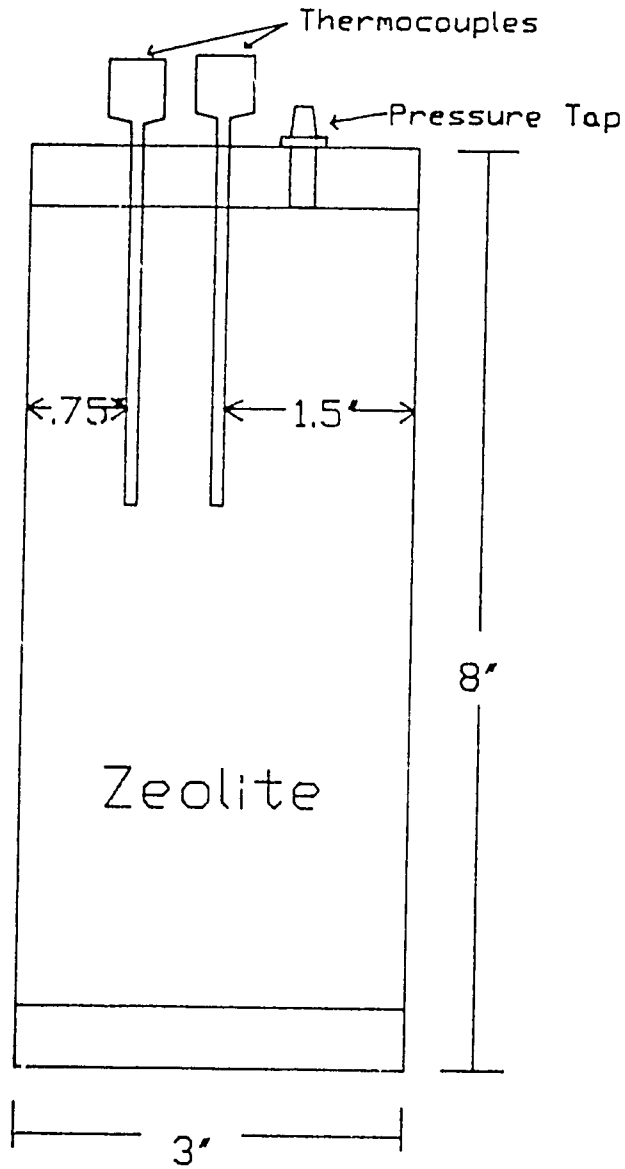

Figure 2

Zeolite contained in the test flask pictured above was heated and cooled by a water bath to study the water adsorption properties of the zeolite.

Lab Apparatus

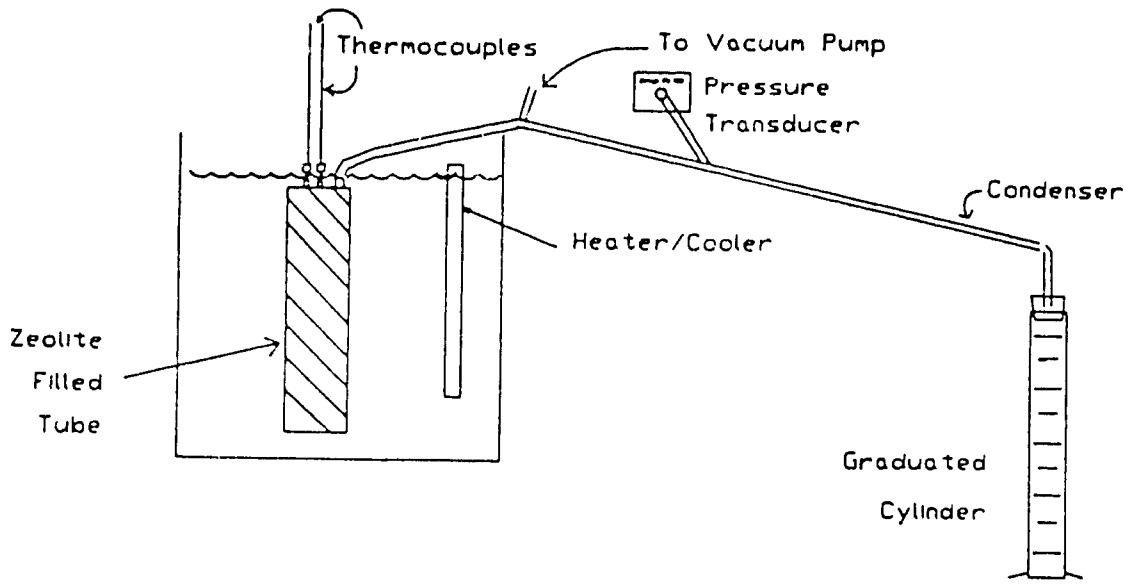

Figure 3

Water desorbed from the zeolite condensed in the condenser (a piece of glass tubing) and collected in the graduated cylinder. The amount of water desorbed could then be easily measured. When the zeolite was cooled the amount of water to adsorb on the zeolite could also be measured.

Methods: lab experimentation

The laboratory apparatus was used to determine relative heat transfer through zeolite, and to predict the adsorption/desorption characteristics as a function of temperature.

To determine the heat transfer and vapor pressure data the following procedure was used.

-- The hot water bath was heated to 180 ^{o} F.
-- The temperature recording equipment was activated.
-- The zeolite heating tube was placed in the hot water bath
-- Water volume desorbed was recorded in the graduated cylinder every 1/2 hour.
-- When the temperature of the zeolite had stabilized (usually around 175° F), the heating flask was removed and allowed to cool at room temperature (75 ^{o} F.).
-- The amount of water resorbed from the graduated cylnder was recorded every hour until equilibrium was reached.

Only the temperature of the zeolite was strictly controlled during the tests. The condenser and evaporator sections were left at approximately room temperatures near 75° F. During the initial stages of the zeolite heating cycles the condenser temperature rose to nearly 110° F at times and the evaporator section fell to the upper 40s during the adsorption cycle.

When the water adsorption/desorption data was collected for typical day/night cycles, the zeolite flask was constantly in the water bath and the temperature of the bath was adjusted to desired levels. All hot cycles were six hours long and all cold cycles were 18 hours long.

Results: lab experimentation

Heat transfer through zeolite was studied with the bench scale apparatus. Figure 4 shows the temperatures of zeolite saturated with water as a function of time after immersion in the hot water bath. The temperature throughout the zeolite rose evenly and rapidly until it reached 130° F. after 1/2 hour. At this point the zeolite began heating more slowly due to energy used to desorb the hydrated water, and the temperature of the center began to lag behind the temperatures closer to the edge.

Figure 5 shows the heating profile of bone dry zeolite which had been baked at 650° F for three days. This removed most of the adsorbed water. An even temperature rise to 178° F was seen, with no unusual plateaus. No water was observed desorbing from the dehydrated zeolite. The rate of temperature rise was lower for the dehydrated zeolite compared with the saturated zeolite and there was a temperature lag between the center temperature and that closer to the edge. The temperature lag indicates a lowered heat transfer rate for the dry zeolite and a relationship between the thermal conductivity and the water content.

The pressure inside the test flask was monitored throughout the heating cycles to obtain data on the vapor pressure of water as a function of zeolite temperature and roughly as a function of zeolite water content. Figure 6 shows two cases where the zeolite was heated with the condenser and

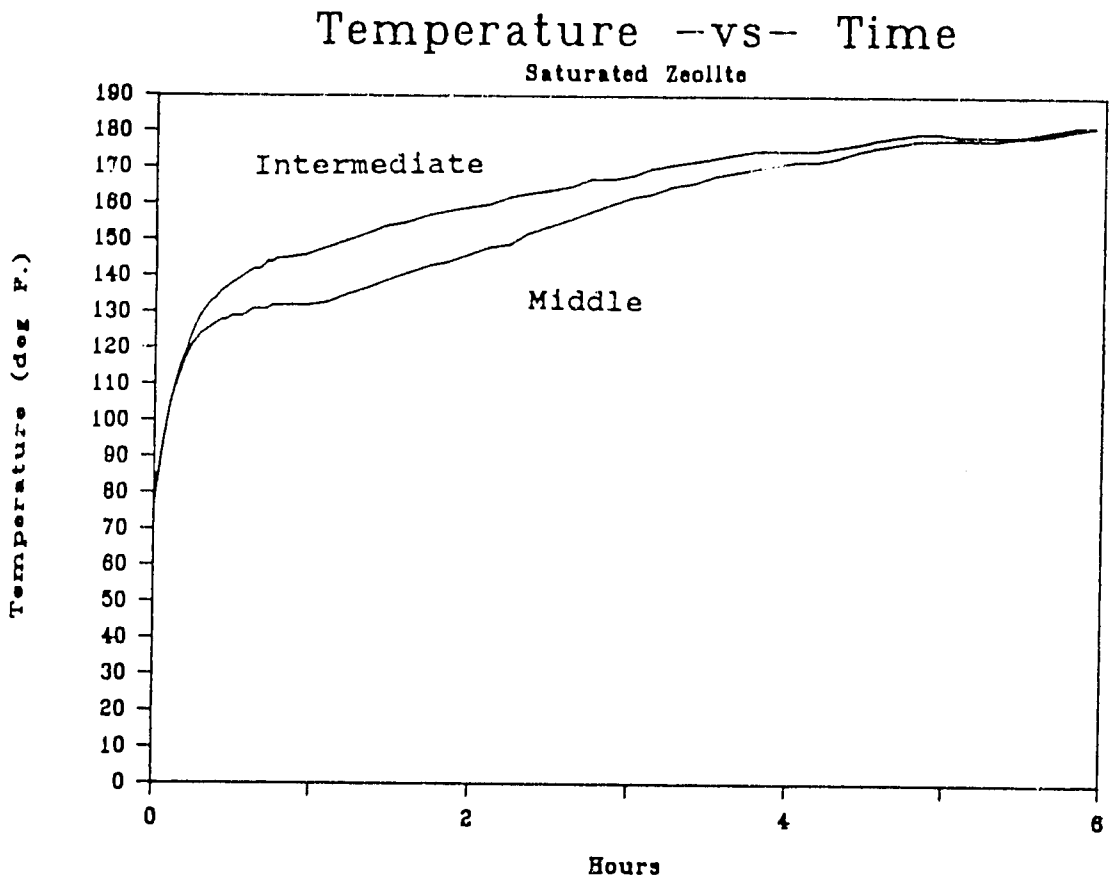

Figure 4

The above graph shows the temperature in the zeolite flask as a function of time, after the flask was immersed in a 180° F water bath. The zeolite used in this trial was saturated with water. The plateau reached after 1/2 hour indicates energy being used for water desorption rather than temperature increase. The intermediate line is the temperature halfway between the center and the edge of the tube. The middle line is the temperature at the center of the heating flask.

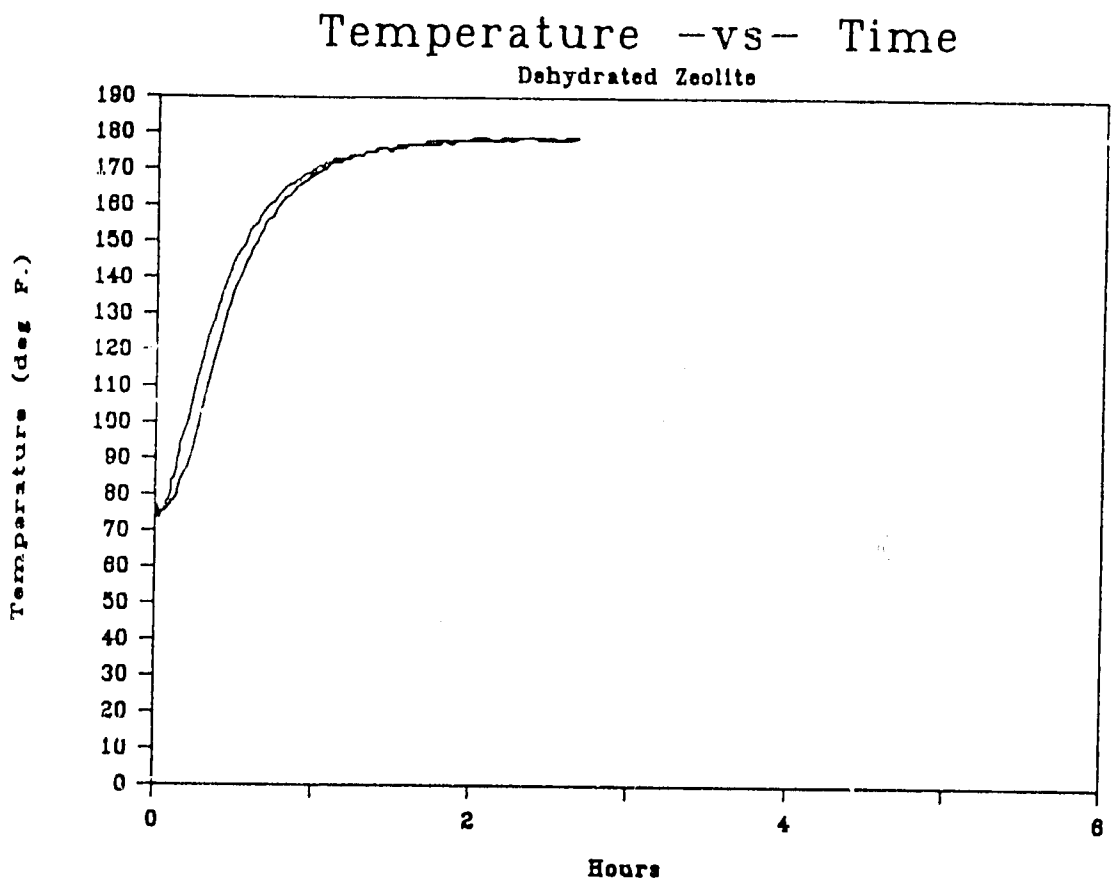

Figure 5

The above graph shows the temperature in the zeolite flask as a function of time after the flask was immersed in a 180° F water bath. The zeolite used in this trial was dehydrated by baking in an oven at 660° F for three days. The steady increase in temperature up to 180° F indicates no energy used for water desorption.

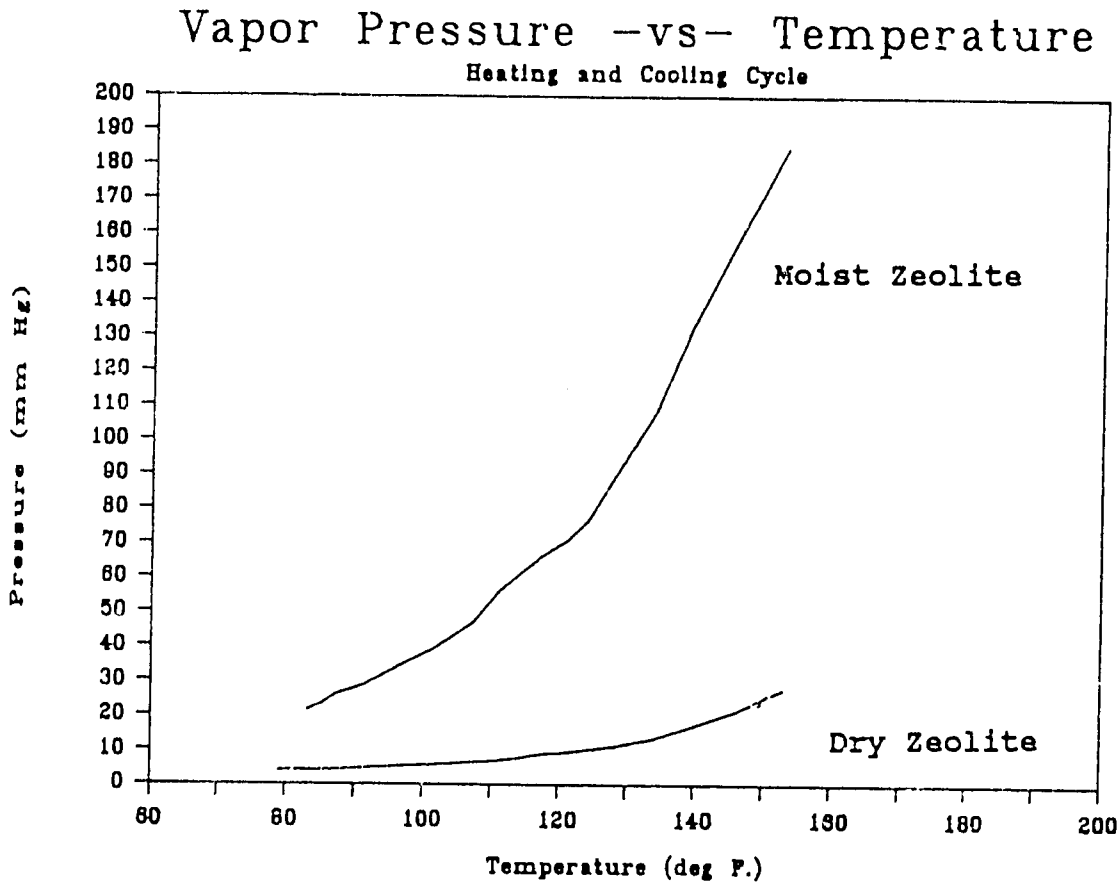

Figure 6

The line labeled "Moist Zeolite" is a plot of the water vapor pressure over zeolite saturated with water as a function of the zeolite temperature. The line labeled "Dry Zeolite" is a similar plot using dehydrated zeolite.

evaporator disconnected, not allowing the water vapor in or out of the heating tube. This allowed accurate measurement of the pressures within the heating tube rather than inside the condenser. The upper plot is for the heating of cool zeolite (desorption cycle) saturated with water, and the lower curve for the cooling of hot zeolite (adsorption cycle) with its water already driven off. The graphs are distinctly different in that the saturated zeolite has a much higher vapor pressure than the dehydrated zeolite. For the upper graph, when the pressure gets high enough, condensation will occur in the condenser; Figure 7 illustrates this. The pressure rises until 130° is reached corresponding to a pressure of 50 mm Hg. At this point rapid desorption begins and as fast as water is desorbed from the zeolite it is condensed.

The rate of water desorption from different sized particles was evaluated. Figures 8 and 9 show the amount of water desorbed over time for two sizes of zeolite, 1/4 and 1/16 inch particles, for both the heating and cooling cycles. The heating phase was much faster requiring six hours to reach equilibrium while the cooling cycle needs 40 hours to reach equilibrium. The heating phase desorbed 3% water by weight of zeolite in the six-hour heating period, but only 1.7% is resorbed in the remaining 18 hours of a day when the zeolite temperature was 75° F. The temperature of the evaporator and condenser was kept at 75° F.

The quantity of water adsorbed and desorbed over a typical day / night cycle as a function of temperature was

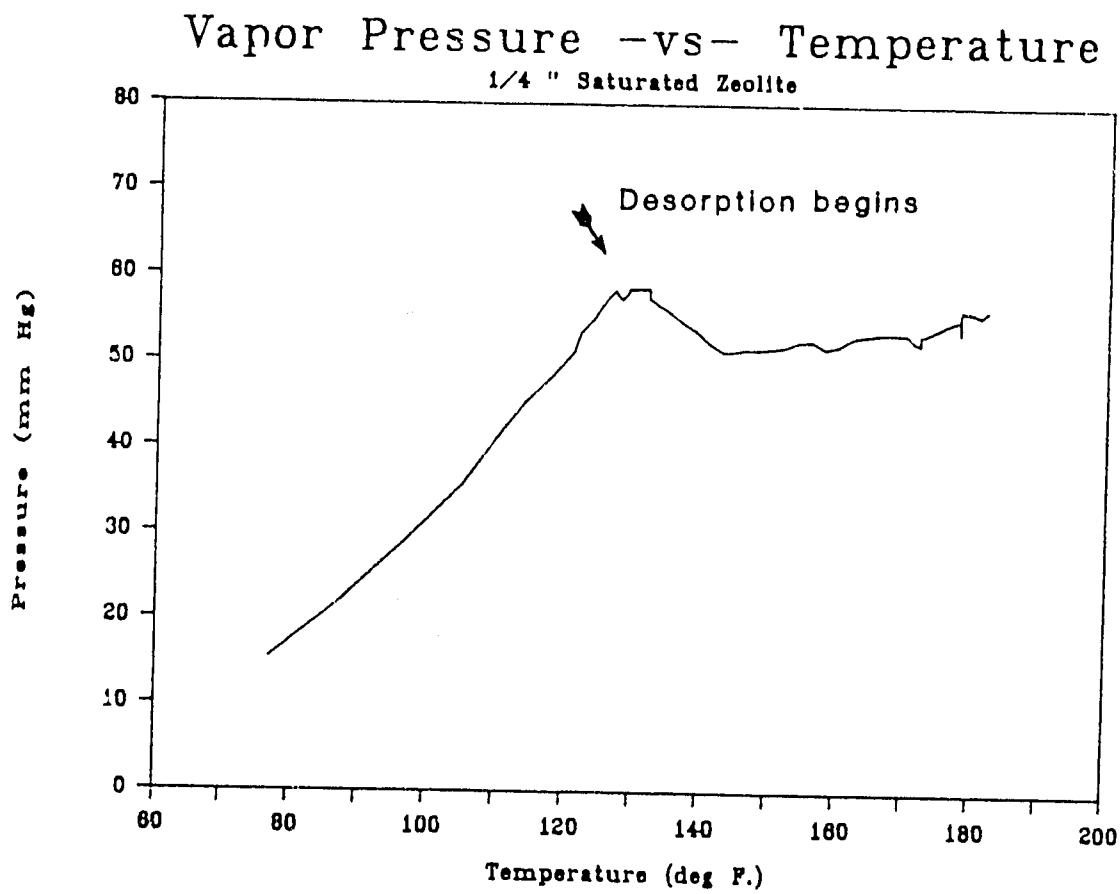

Figure 7

The figure shows the water vapor pressure in the condenser section of the lab apparatus as a function of zeolite temperature. Water begins condensing rapidly when the zeolite temperature reaches 130° F corresponding to a vapor pressure of 55 mmHg and a condenser temperature of 104° F.

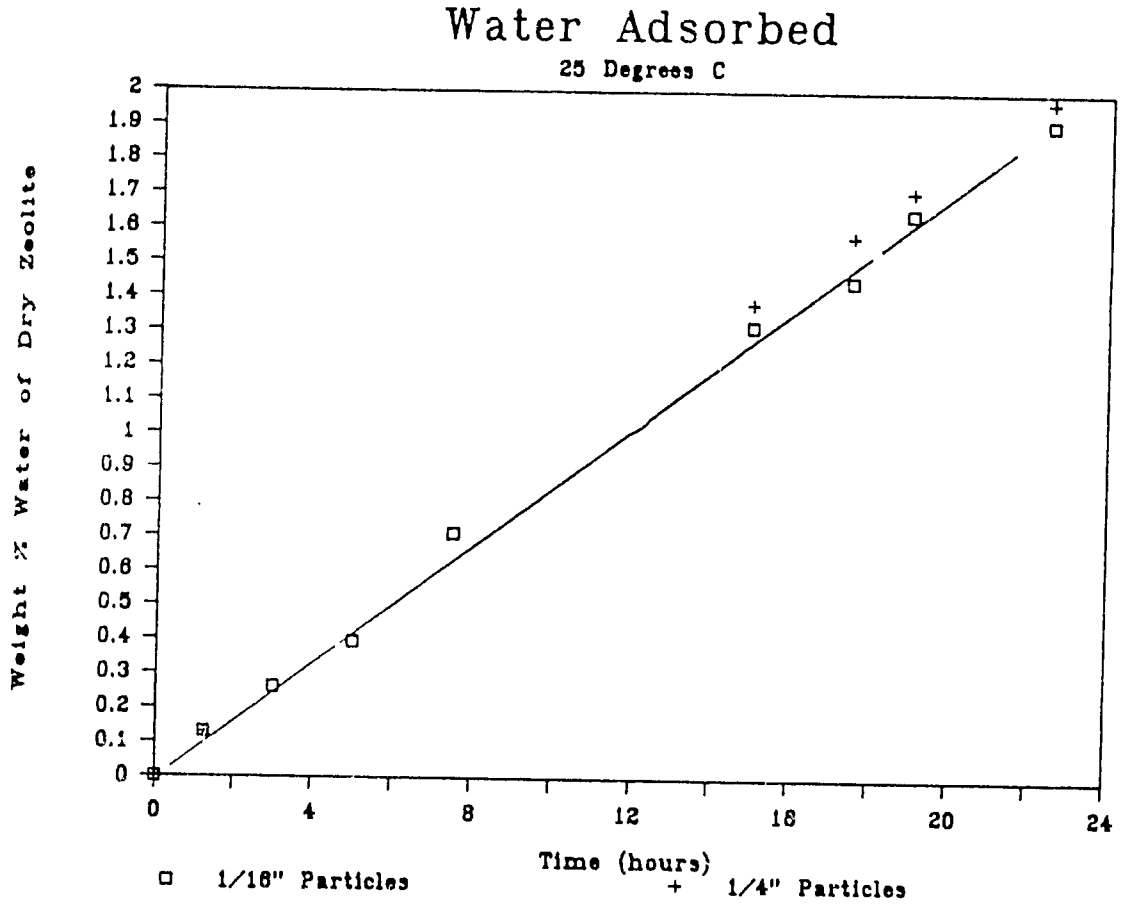

Figure 8

The amount of water adsorbed by zeolite over time after a heating cycle is shown in the above figure. This was measured for both 1/16 and 1/4 inch diameter zeolite particles. Notice that equilibrium is not reached after 24 hours.

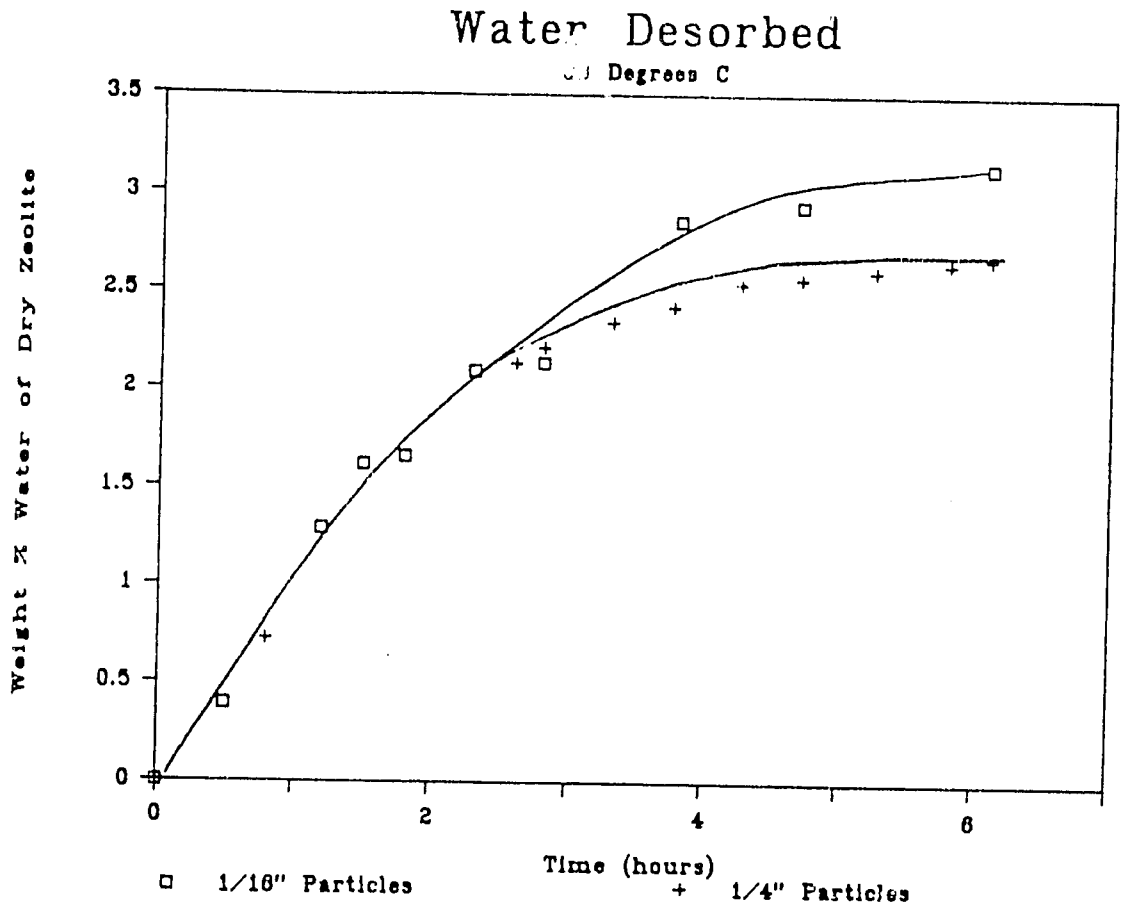

Figure 9

The amount of water desorbed by zeolite during a heating cycle is graphed in the above plot. Equilibrium is nearly reached after 6 hours of heating for both the 1/16 and 1/4 inch diameter particles.

measured. The results are shown in Figures 10 and 11. No water was adsorbed by the zeolite when the nighttime temperature was kept at 100° F or higher and 3.3 percent by weight of dry zeolite was adsorbed when the temperature was kept at 60°F. Desorbed water was measured at 1.4% for a daytime temperature of 150° F and 3.3% at 190° F.

Discussion: lab experimentation

The rate of heat transfer through the moist zeolite is high enough not to pose any collector design problems with three-inch deep zeolite beds. The zeolite was heated thoroughly and evenly by the hot water bath throughout the tube. The difference in heating rates between saturated and dehydrated zeolite is due to the rapid desorption of water at the edge of the tube and subsequent rehydration almost immediately in the cooler center of the tube. The water carries the latent heat of adsorption with it from the edge to the center of the tube. When the temperature profiles through the dehydrated zeolite were measured the lag between edge and center temperature was greater since there was not enough water adsorbed on the zeolite to transfer the heat.

The temperatures required for the collector to operate efficiently were found by lab experimentation to be at least 150° F for the daytime cycle and 90° F or less for the night cycle. Daytime temperatures of 150° F can be easily reached for short periods in the collector on a sunny day in nearly

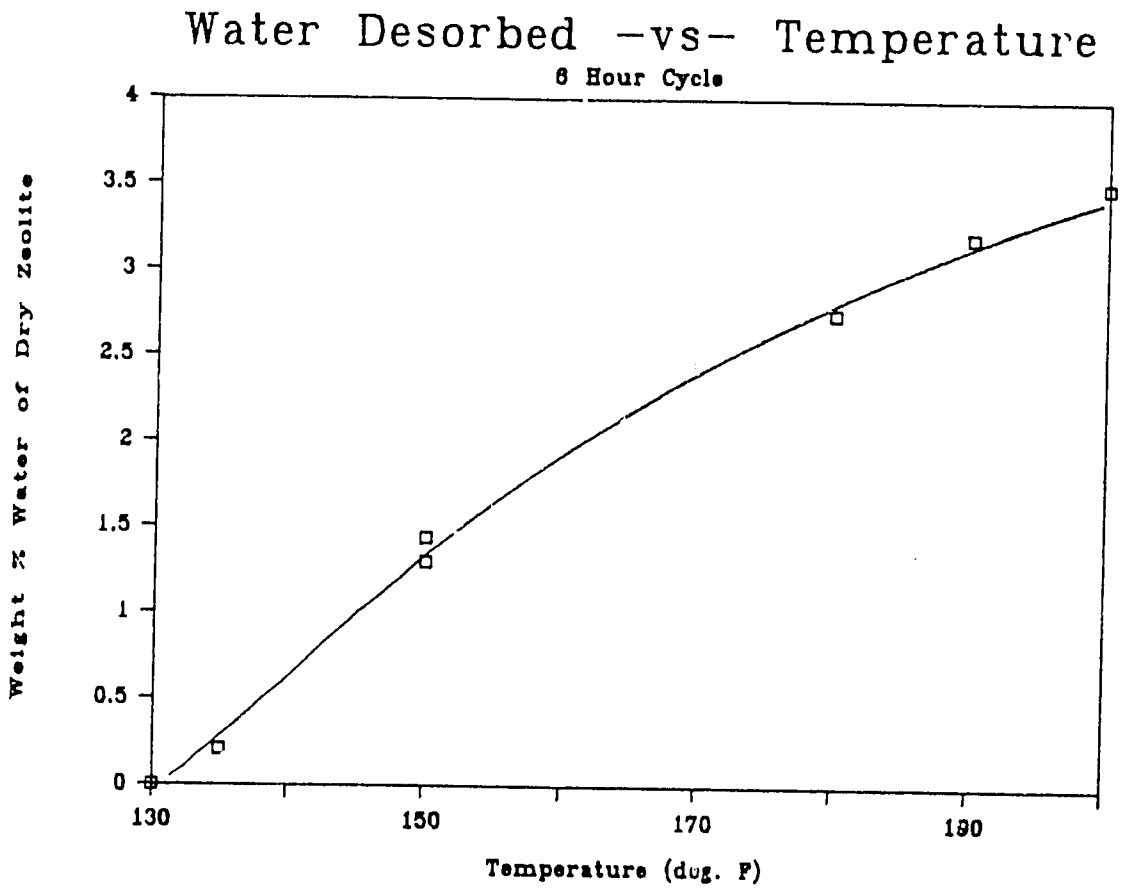

Figure 10

The amount of water desorbed by zeolite over a set 6-hour heating cycle is shown as a function of water bath temperature in the above graph. No water was desorbed when the water bath was at 130° F and 3.5 weight percent was desorbed when the water bath temperature was increased to 200° F.

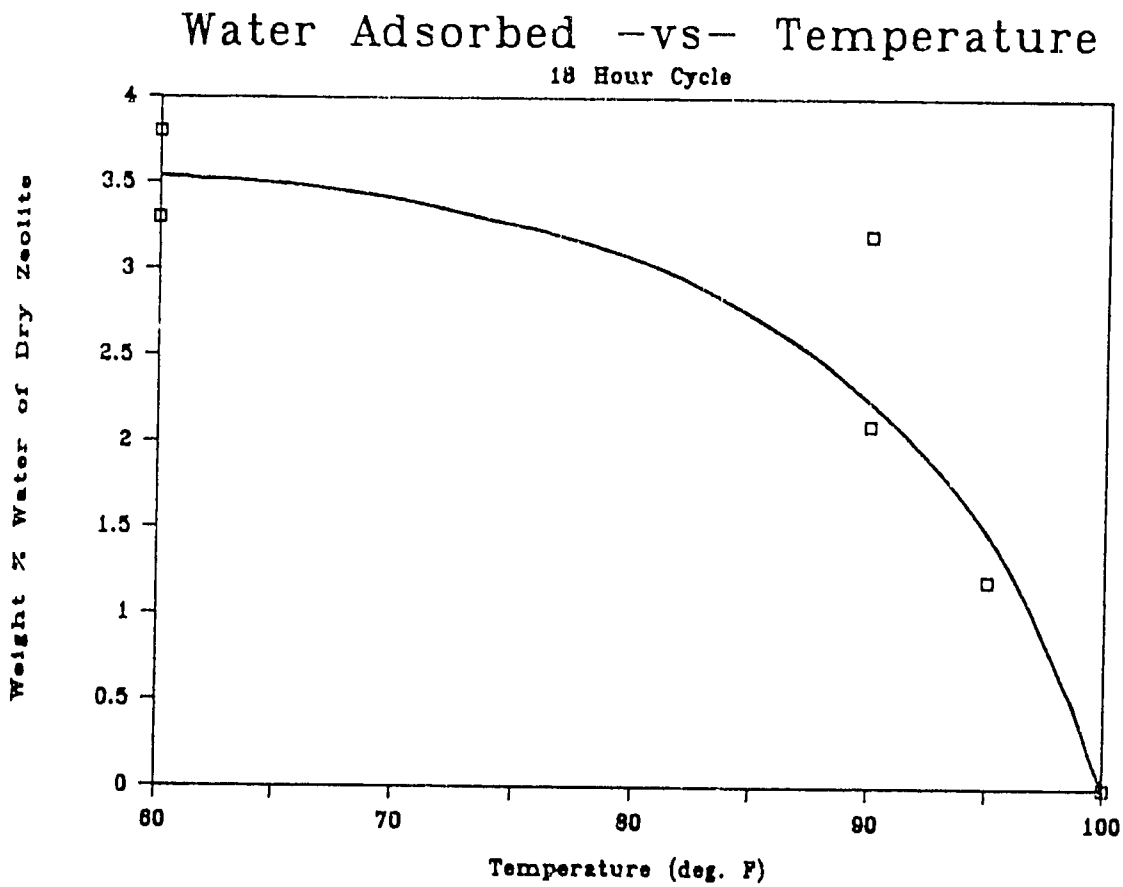

Figure 11

The amount of water to be adsorbed by zeolite over an 18-hour cooling cycle is shown as a function of water bath temperature in the above graph. The greatest amount of water adsorbed occured at the coolest temperatures.

any climate. It is preferable to reach higher temperatures-over 190° F if possible. By cooling the zeolite to 60° F there is an increased efficency of 29%.

The heating cycle requires less time than the cooling night cycle. Equilibrium was reached in the six-hour test heating cycle, but water was still being adsorbed by the zeolite after 48 hours at a constant temperature. This can be partially attributed to the difference the driving forces between the two cycles. The driving force during the heating cycle is the difference between the vapor pressure over the zeolite and the vapor pressure of the water in the condenser. At a zeolite temperature of 170° F and a condenser temperature of 110° F this difference is 148 - 67 = 81 mm Hg (from Figure 6 and Antoine's equation). For the cooling cycle this driving force is the difference between the water vapor pressure over the zeolite and the vapor pressure of the water in the evaporator or for a zeolite temperature of 80° F and an evaporator temperature of 50° F would be 4 - 9 = -5 mm Hg. Both the adsorption and desorption rates are functions of the condenser and evaporator temperatures, but the rate of desorption is greater under normal operating conditions. By increasing the temperature of the evaporator, the rate of water adsorption can be enhanced, thus making the heat transfer between the material to be cooled and the evaporator water crucial.

PROTOTYPE TESTING

Materials: prototype testing

Manifold System

The three protypes built consist of two separate designs. The manifold design comprised the first and second prototypes, with the single tube design the third. The manifold design is characterized by the collector tubes being connected to each other and the condenser by means of a manifold, and the single tube design by being an entire refrigerator in one pipe. Both systems are illustrated in Figure 12.

The manifold system initially was constructed entirely from three inch black ABS sewer pipe which failed structurally when heated above 170° F, and then partially reconstructed with aluminum irrigation tubing. The aluminum had a wall thickness of 0.050 inches with an outer diameter of three inches, and the three inch black ABS pipe had a wall thickness of 0.25 inches and outer diameter of 3.5 inches. The collector consisted of eight, 15-foot long tubes laid horizontally in a collector box 4' X 16' X 8" as illustrated in Figures 12 and 13. Each tube was filled to two thirds capacity with 30 pounds of zeolite. The zeolite was then spread evenly throughout the tube leaving a gap between the top of the zeolite and the upper portion of the tube. This gap was necessary to transport the desorbing and adsorbing water

Figure 12

The upper picture shows the collector portion of the manifold system and its supporting structure. The lower photograph shows the condenser and collector sections of the single tube design. Both collectors were painted black and filled with zeolite.

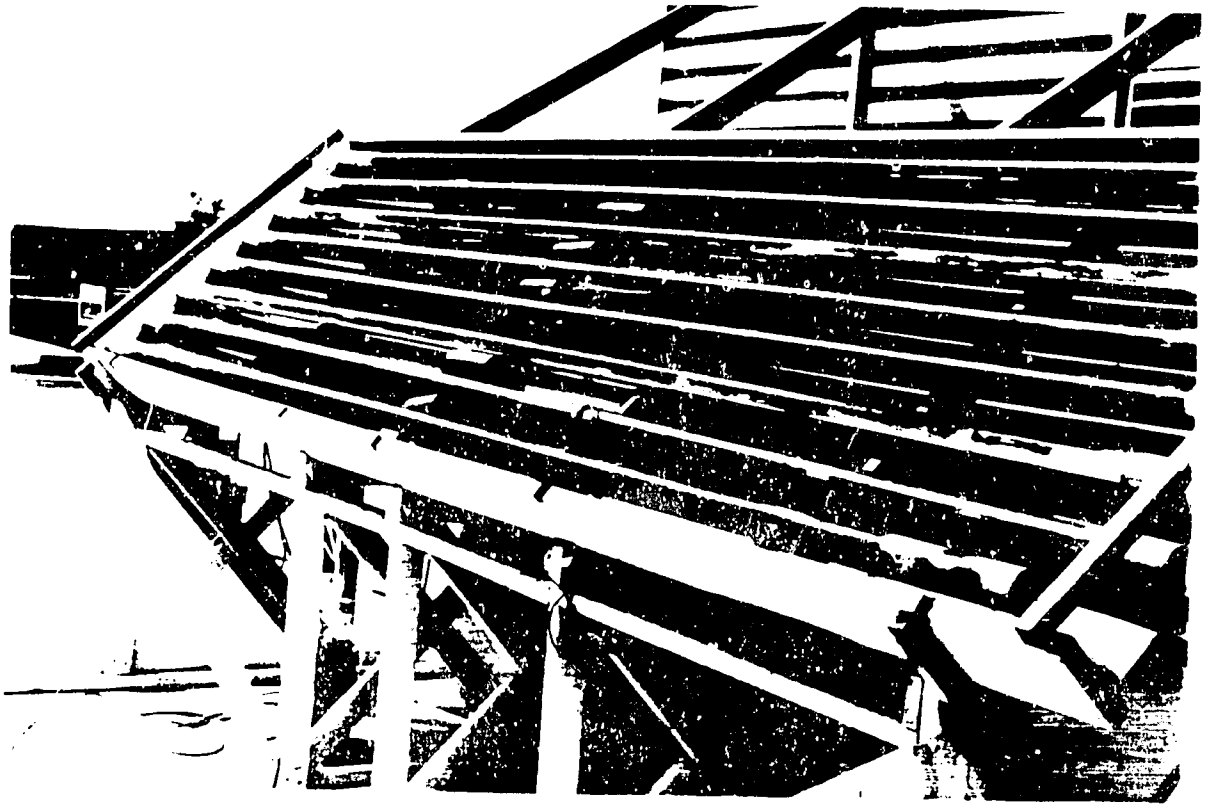

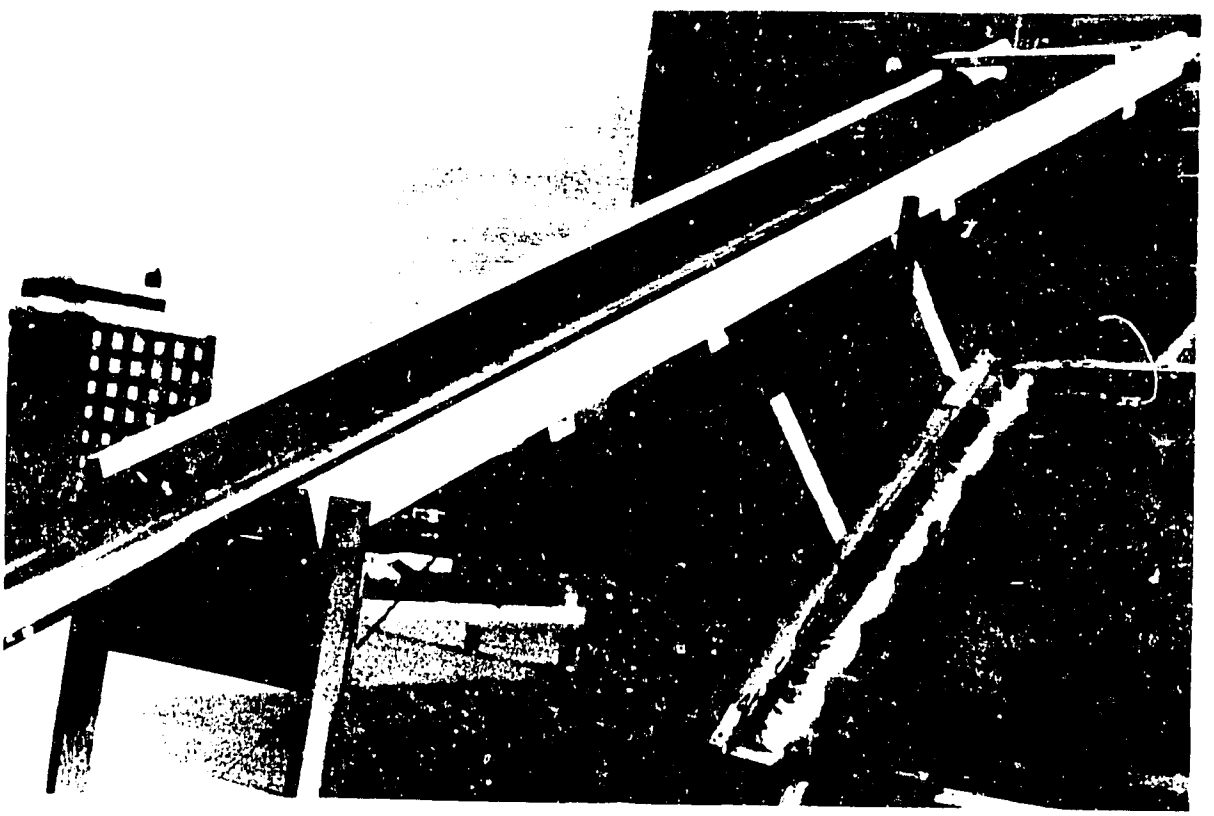

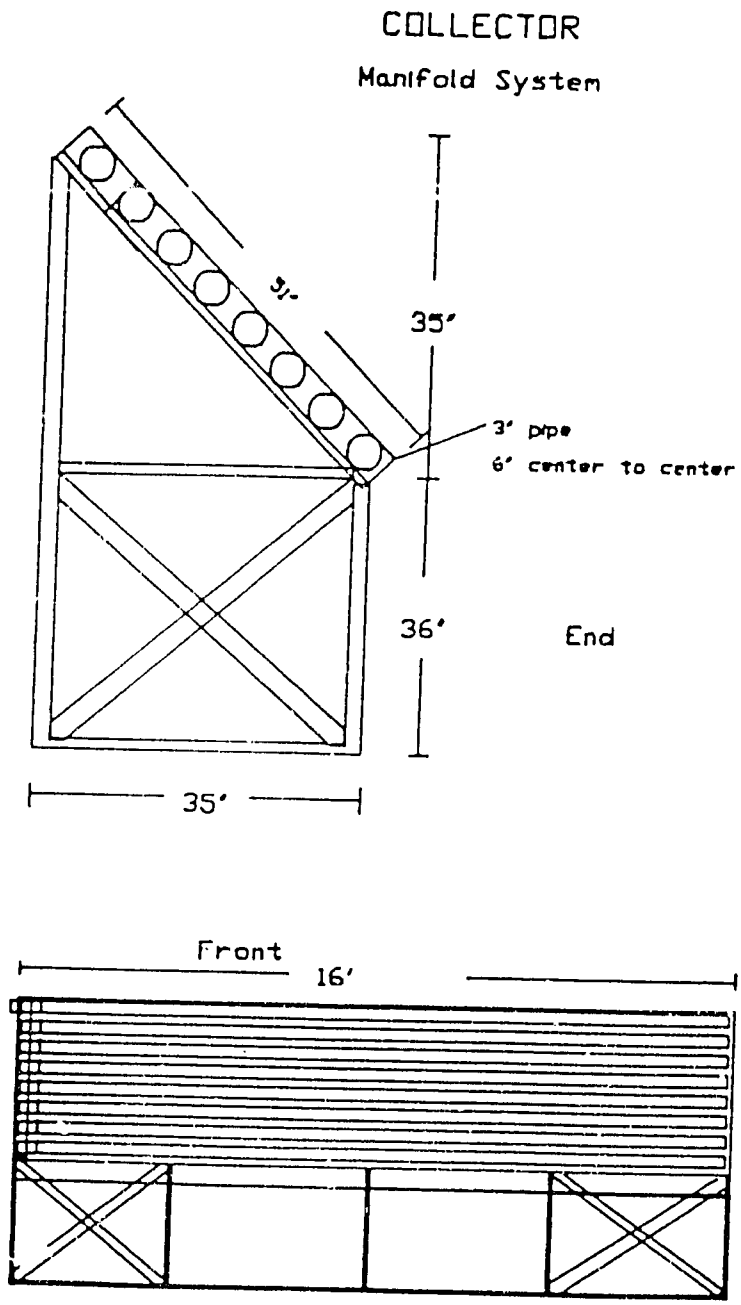

Figure 13

A schematic of the manifold collector is shown above. The collector consisted of eight alumininum tubes with a diameter of 3-inches connected together and to the condenser by the manifold as shown in Figure 14.

vapor to and from the zeolite bed. Black paint was applied to the collector tubes to increase the effective absorptance. The aluminum tubes were connected together by a welded aluminum manifold constructed by Artcraft of Campbell, California per Figure 14. Great care was taken by Artcraft to insure there were no leaks in the welds of the manifold.

The aluminum tubes were sealed at the ends with plugs made from aluminum bar stock machined per Figure 15. The small ends of the plugs were evenly coated with silicone glue and then placed into the ends of the tubing. An approximately 1/8 inch gap was left between the lip of the plug and tube; this gap was carefully inspected for uniform and adequate glue content. When cured the glue in the gap became a sort of O-ring seal, insuring an airtight fit. The connection between the manifold and the tubing was similarly constructed. Hollow aluminum stock was cut and formed as in Figure 15 and glued to the manifold and collector tubing using the same technique as the end plugs.

The condenser was made from a 17-foot length of aluminum tubing connected to the collector by the manifold via a 180 degree bend of ABS pipe. The condenser sloped downward from the manifold and behind the collector at an angle of 10 degrees from the horizontal, towards the evaporator section, allowing condensed water to flow freely towards the evaporator.

The evaporator was made from ABS pipe and made a 180 degree bend from the condenser before entering an insulated

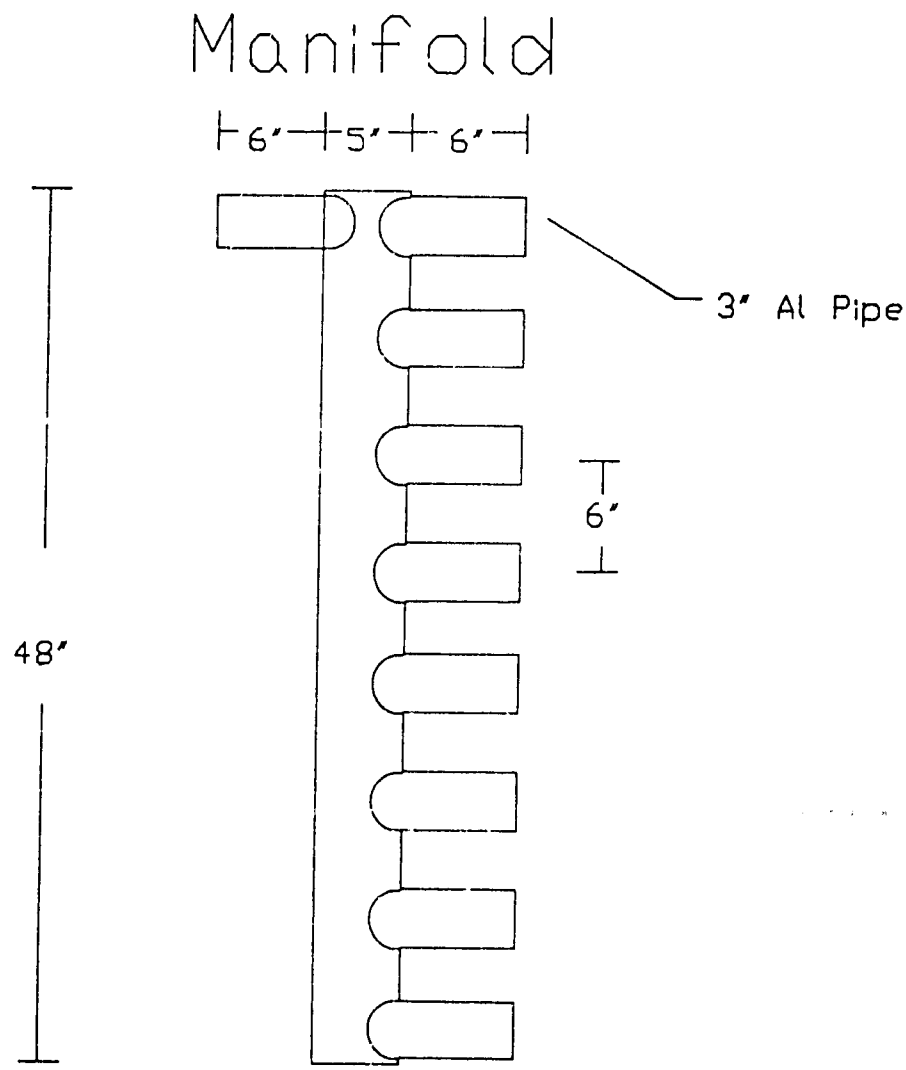

Figure 14

Shown above is a schematic of the manifold used to join the eight aluminum pipes of the manifold system collector The wall thickness of the manifold is 0.060 inches.

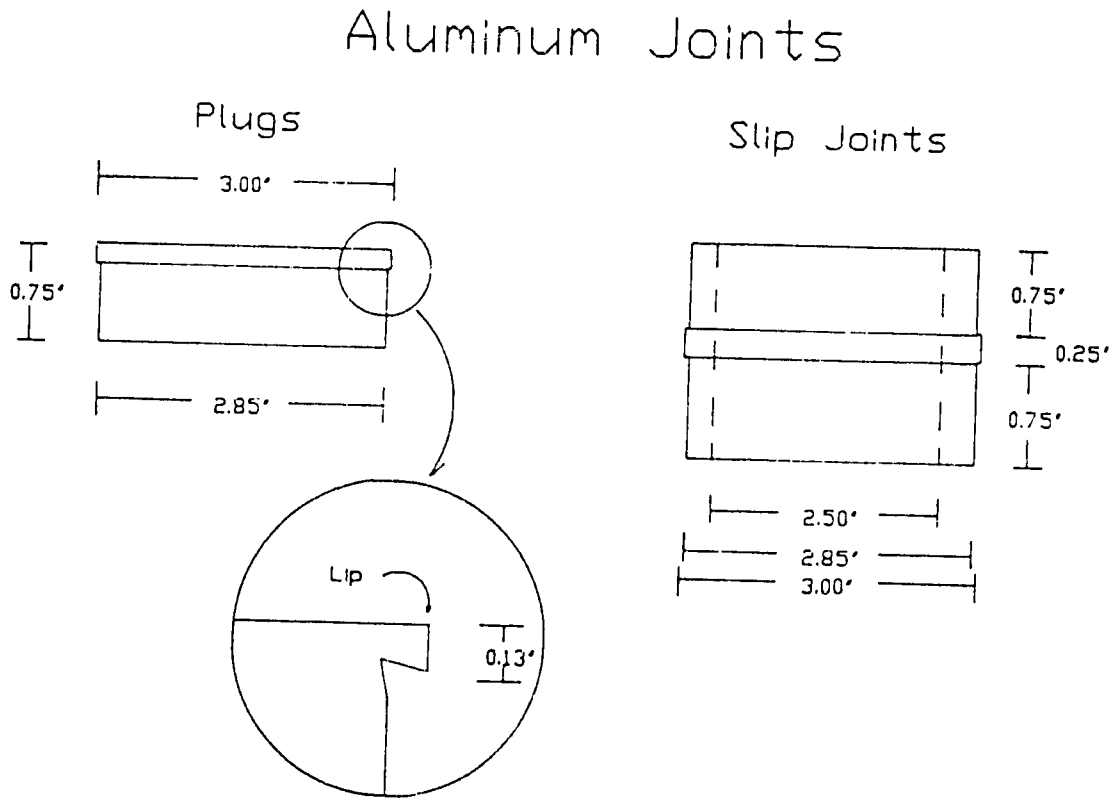

Figure 15

The end plugs used to seal the aluminum tubes are shown above. They were constructed from solid aluminum stock and were glued to the aluminum pipe using silicone glue. The slip joints to connect the aluminum pipe to the manifold are also shown and also are glued to the aluminum pipe with silicone glue.

box located behind the collector. Inside the insulated box were four lengths of ABS pipe each five feet long and connected together with a manifold of ABS elbows and T's. The evaporator section was the lowest section of the system.

The support structure for the refrigeration system was made from plywood and wooden 2 X 4's. The collector box consisted of two sheets of 1/2 inch plywood layed end to end and ringed with a frame of 2 X 8's. This made a shallow box four feet wide and 16 feet long with a depth of 7 1/2 inches. A layer of 1 inch styrofoam insulation was placed on the bottom of the box, the collector tubes installed over that, and a film of clear plastic 6 thousandths of an inch (mils) thick was placed over the top. The whole box was angled at 45 degrees to the horizontal and aligned to face straight south for maximum solar insolation. The support frame holding the collector box was made entirely from 2 X 4's and held the collector box 3 1/2 feet off the ground.

The insulated box was also made from plywood and 2 X 4s. The outer dimensions of the insulated box were 4' X 4' X 8'. Five sheets of 1/2" plywood forming the outer siding were nailed to a frame of staggered 2 X 4's making the walls six inches thick. Quarter inch plywood was used for the inner flooring of the insulated box and was nailed to the frame. The insulation consisted of two inches of styrofoam board next to the inner walls and four inches of fiberglass over that, making an insulating barrier making a calculated R value of 23. Additionally a plastic film (6 mils) was wrapped around

the frame prior to attaching the outer siding, eliminating any air flow through the siding and insulation, into the interior. The interior dimensions of the box were 3' X 3' X 7' for an volume of 63 cubic feet. The evaporator tubes were supported by stringers placed across the cool box.

Temperatures throughout the system were measured using thermocouples and a computer data gathering system. Chromel alumel (type K) thermocouples were either made from thermocouple wire or purchased. Thermocouples were placed on the surface of the collector tubes in the direct sunlight, in the air in the collector box and in the zeolite bed itself. More were placed on the condenser surface and throughout the walls and interior of the insulated box. Pressure inside the system was measured using absolute pressure transducers. An IBM-Personal computer and MetraByte data acquisition board were used to monitor the pressures and temperatures throughout the prototype.

Single tube design

The single tube design combined all three parts of the refrigeration system, collector condenser, and evaporator into one straight or bent tube as shown in Figure 16. One end of the pipe served as the collector and was filled with zeolite, the other end served as an evaporator and the length in between the condenser. The whole tube was tilted with the evaporator section at the lower end.

SINGLE TUBE DESIGN

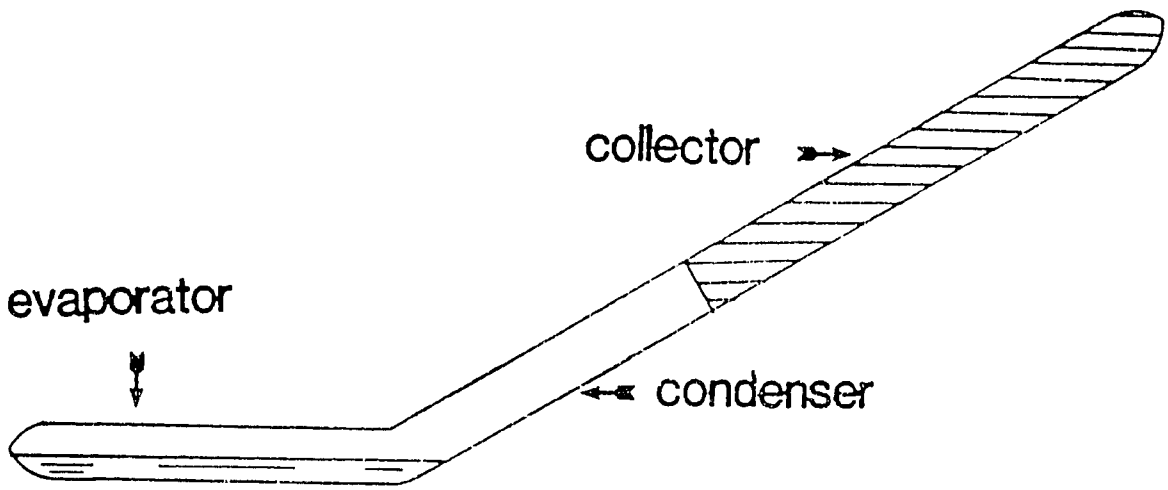

Figure 16

The single tube design is diagramed above. Zeolite contained in the upper portion of the tube is warmed by the sun, the subsequent desorbed water condenses in the middle section of the tube and is collected in the lower end of the tube. At night the zeolite cools and adsorbes water from the lower end of the tube.

Four different types of tubing were used in the construction of the single tube prototype. A three-inch (nominal) schedule 40 black steel pipe 3.5" outer diameter and 3.0" inside diameter with threaded fittings was used for the first pipe. The length used was 21 feet, the standard length for schedule 40 pipe. A twenty-foot length of refrigeration grade copper pipe with soldered end caps was also used. The outer diameter of this pipe was 3.125 inches with an inner diameter of 2.875 inches. The third pipe was 2 1/2 inch muffler tubing 19 1/2 feet long. The ends were pounded flat and soldered to an airtight seal. Three more tubes were made from the same irrigation tubing as in the manifold system. Each tube being twenty feet long. Again as in the manifold system the ends were sealed with the aluminum plug seals.

The collector section of each tube was 12 feet long, the condenser consisted of the next three feet, and the remaining 4 1/2 to 6 feet was the evaporator. The collector portion of each tube was housed in a collector box with dimensions 12' X 8" X 27". The box was constructed similar to the manifold system collector box, and had one inch of styrofoam insulation on the bottom, the refrigerator tubes layed on top of the insulation, and a thin 3 mil sheet of clear plastic film over the top. The evaporator section was housed in an insulated box 32.5 inches wide, 87 inches long, and 13.5 inches deep. The top, ends, and sides of the box had styrofoam insulation four inches thick and the bottom two inches. This left an inner volume of 24" X 78" X 5.5" or 6.0 cubic feet. The inner

volume was lined with a plastic film and divided into two sections. These sections were filled with water to provide a known thermal mass for use in cooling measurement. The west side bladder contained the schedule 40 steel and copper pipes, and the east side contained the three aluminum pipes. The siding for the box was made from 1/2 inch plywood. The condenser section was between the collector and evaporator and was shaded by a piece of plywood. The entire system was attached to the side of a building at an angle of 25 degrees to the horizontal and placed facing due south for maximum solar insolation as shown in Figure 17.

The inner portion of each tube contained several components to increase the refrigeration efficiency. A fifteen foot length of 5/8-inch copper pipe was perforated with two 3/16-inch holes every 4 to 5 inches. This pipe was then placed down the center of the refrigerator tube as diagramed in Figure 18. The smaller pipe was suspended from the top of the refrigerator tube. This pipe also served to support the zeolite bed. A heavy screen was cut to the diameter of the collector tube and attached to the smaller inner pipe 12 feet down its length. This screen held the zeolite in place in the collector portion of the tube. Two more screens were placed in the condenser portion to act as inner fins and areas for water condensation. The lower end of the inner pipe was sealed to prevent water vapor from passing through the condenser without coming in contact with the condenser walls.

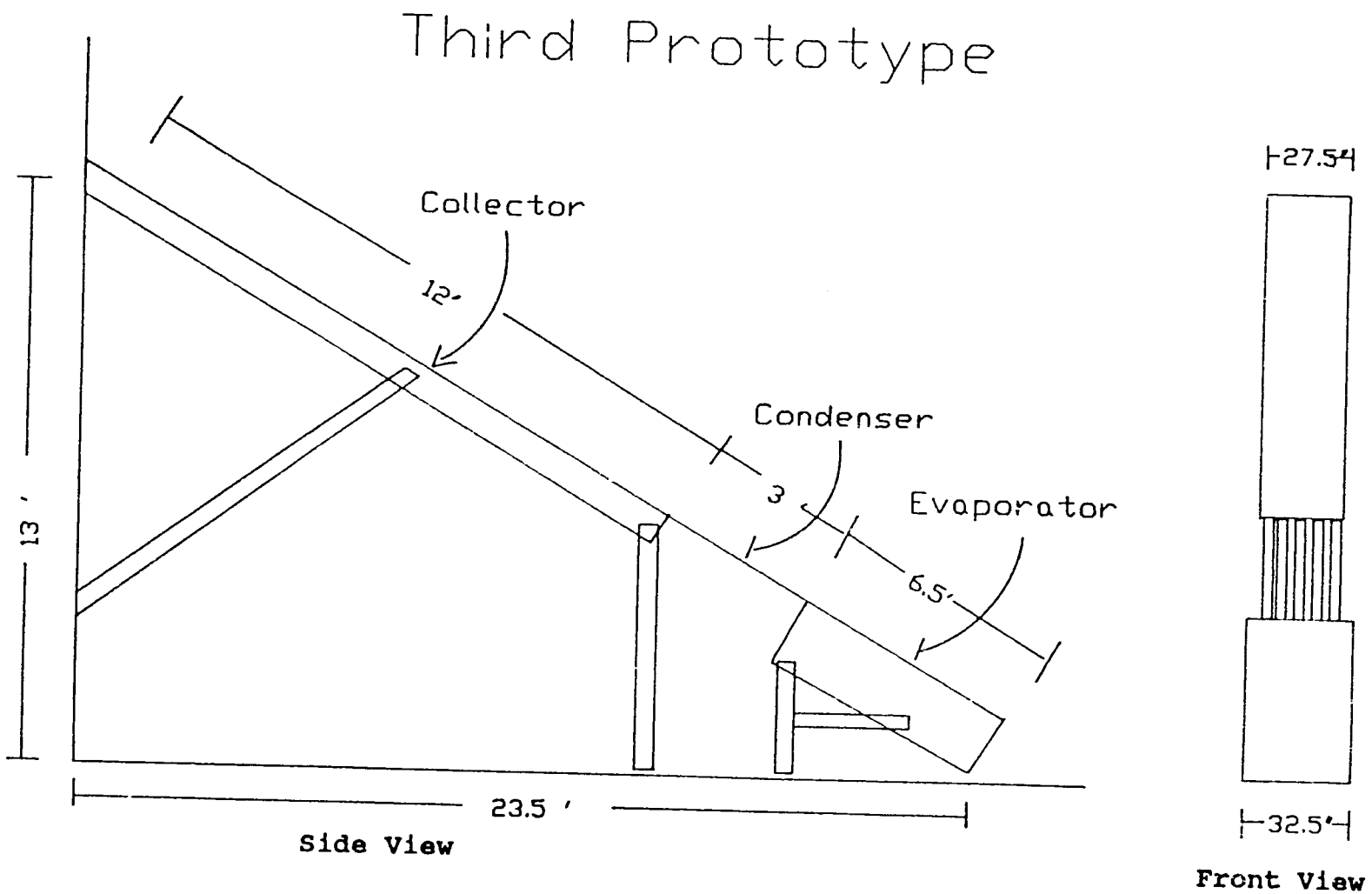

Figure 17

This figure is a diagram of the third prototype which is of the single tube design.

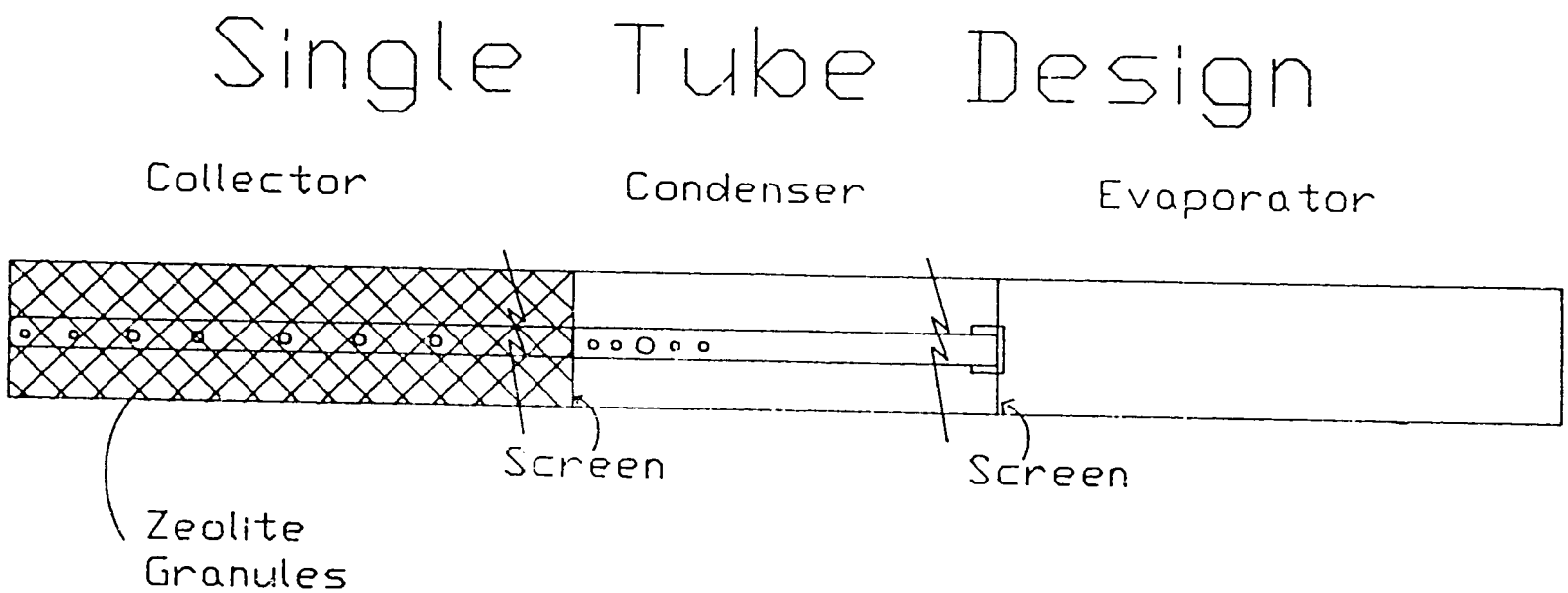

Figure 18

This cross'section view of the refrigerator tubes in the third prototype shows the internal components. A 5/8-inch copper pipe perforated with holes every 4 to 5 inches, runs the length of the tube. A screen attached to the pipe divides the collector section from the condenser and also supports the zeolite.

Access to evacuate the tubes and monitor their pressure was through push-on hose fittings, for 1/8 inch hose and 1/4 inch pipe thread. The brass fittings were soldered to the copper and muffler pipe. Teflon tape was used to seal the threads on the aluminum and steel pipe. Heavy walled 1/8" diameter tygon tubing was pushed onto the fittings and then sealed with an ordinary hose clamp. This provided an easy and effective way to make an airtight valve. The tygon tubing was attached to the upper end of the aluminum and steel tubes in their collector sections, and to the condenser section of the copper pipe. The same type of zeolite was used to fill the straight tubes as was used in the manifold system. Each tube could be filled to capacity since the inner pipe was providing space for water vapor flow. The schedule 40 pipe was filled with 30 pounds of zeolite, the aluminum and copper tubes with 28 1/4 pounds and the muffler tubing with 18 1/2 pounds.

Two classifications of testing were done on the prototypes of the refrigeration system. Initial testing of the prototypes was primarily for air leaks and performance of the solar collector. Later testing was done to determine the operational performance and efficiency of the solar refrigeration systems.

Methods: prototype testing

Leak Testing Methods

The best time to evacuate the collector tubes was when they were below 100 ^{o} F. This was because at higher temperatures the zeolite can desorb large amounts of water at the pressures the pump is able to attain. Consequently the desorbed water goes into solution with the agitated vacuum pump oil. The clear golden color of the pump oil turns milky white when excessive amounts of water are present. When this occurred the oil was drained and replaced with new or recycled oil. A water trap was used for a time, but was suspected of contributing to an inadequate vacuum and its use was discontinued.

The refrigeration system was evacuated until a steady pressure less than 25 mm Hg was reached. This usually occurred over a period of 3-5 hours for the manifold system with a volume of 8.4 cubic feet and 1/2 hour for each tube of the single tube design with an internal volume of one cubic foot.

The evacuated tubes were then allowed to rest for a period of time (usually one day was needed), graphs were made of the pressure as a function of zeolite temperature and these compared with the temperature and pressure of the refrigeration system being tested over a period of time. If the pressure remained in the graphed range as shown in Figure 19 over the testing period the seals were determined good.

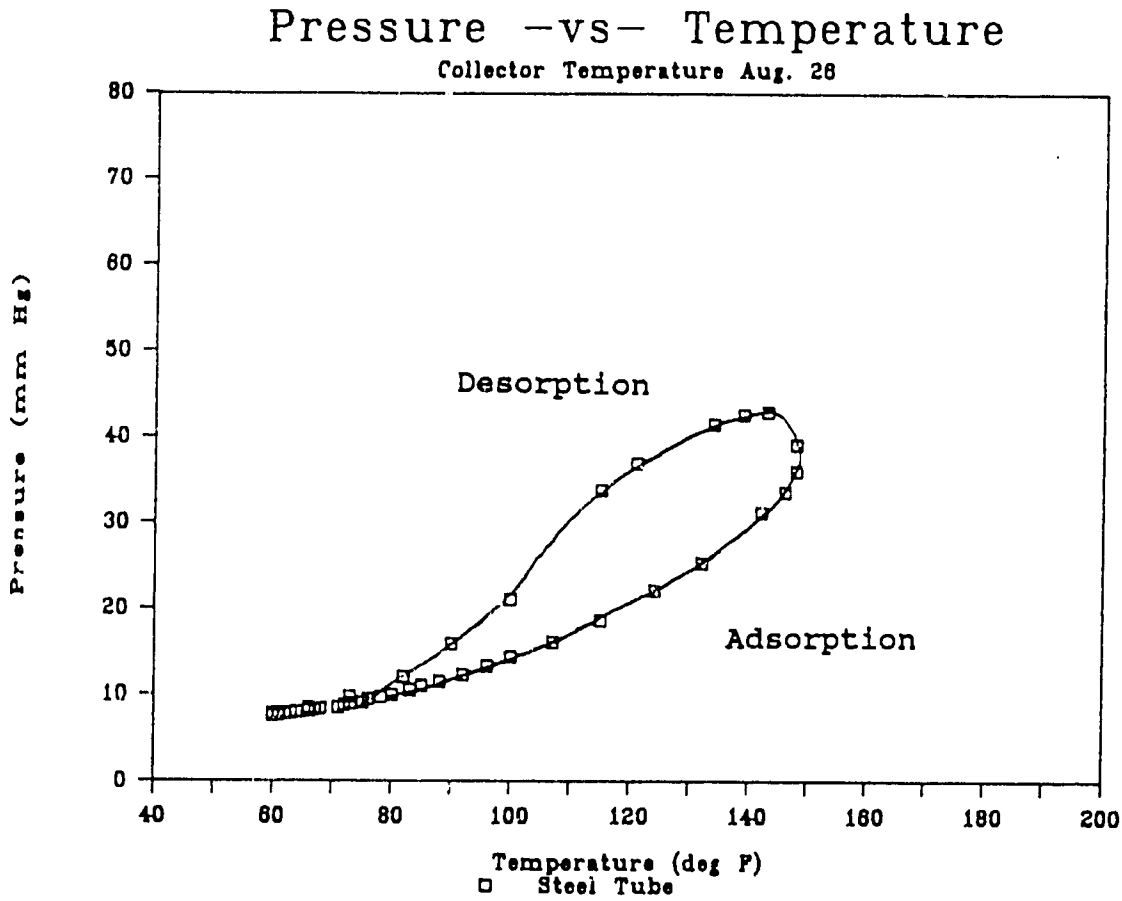

Figure 19

The water vapor pressure in the collector on August 26 was plotted as a function of zeolite temperature. This plot is typical of all the pressure-temperature plots made and used for leak detection. If the pressure was above the ringed area a leak was suspected.

Cooling Measurement

To measure the cooling of the second prototype a short temporary condenser was attached to the manifold. This condenser led directly to a clear glass flask with a capacity of 1.2 gallons. The volume of water was recorded in the flask in the early evening when desorption had stopped, and in the morning before desorption began again. During the day the flask was kept in an ice water bath to insure total condensation of all the water which would desorb. This volume of adsorbed/desorbed water gave an indirect reading of the total cooling capacity of the system, and was combined with simultaneous measurements of temperature in the collector and zeolite bed.

The results of this testing was that only 200 out of a predicted 3200 grams of water were observed to change phase. This could have been caused by three different problems. One would be the saturation and plugging of the zeolite pores by hydrocarbons in the system. The hydrocarbons came from the plastic pipe orginally used for the collector. This was tested by removing a portion of the zeolite from the tubes and analyzing it in the lab apparatus. It was found to behave just as the fresh zeolite behaves. Another possibility was the nonuniform distribution of zeolite in the collector tubes, plugging the vapor passage. The vapor passage was modified in two of the tubes by inserting and then removing a 3/4 inch tube down the length of the collector tube. The amount of

water vapor desorbed was then measured and found to be the same 200 instead of 3200 mililiters. The last and probable cause is a lingering air leak which is, because of the size of the system, hard to detect and harder still to find. Over a period of two weeks the pressure was monitored and increased by 22 mm Hg, indicating a small leak.

Prior to August 10 all the tubes in the single tube design had a ratio of zeolite to water of 9.13:1 . This is to say that for every 9.13 pounds of zeolite in the tube, 1 pound of water was added. After August 10 this ratio was changed to 4.6:1 by the addition of water to each tube. This was done by sucking the required amount of water into the tube through the pressure measurement port. The vacuum in the tube was sufficient to do this.

Results: prototype testing

After the collapse of the ABS prototype, due to weakness at high temperature, the aluminum system was built. Difficulties with sealing the entire system delayed operation of the prototype until summer was over and the sun was no longer bright enough to obtain the 150° F temperature needed. A single tube was attached to a miniature evaporator and condenser. This single tube did operate and produced small amounts of ice in the fall. The temperature in the zeolite during this time reached 150° F in the daytime and 50° F at night.

The second prototype, consisting of the aluminum tubing for the collector and condenser, with plastic pipe remaining for the evaporator section had at least two problems. The pressures necessary for significant cooling were never reached. There seemed to be no problems with sealing the joints against leaking, but the pressure could not be brought below 9 mm mercury. This may have been caused by the continual off gassing of the unreacted hydrocarbons in the ABS piping. NIBCO Chemtrol states that PVC piping will off gas until reaching equilibrium at about 10 mm of mercury(Catalog 5-170-A pp53) when kept at 73° F. This agrees with the minimum pressures attained by the prototype of 9mm mercury.

The amount of cooling was measured for the daily operation of the third prototype. The amount of cooling accomplished was calculated for both the east and west bladders in the cool box. These calculated figures are shown with the temperatures measured in the collector and the temperature in the evaporator section or cool box. The results are shown on Table 1.

Table 1

Date	Cooling Accomplished per section BTU's East	West	Temperatures °F Evaporator East	West	Collector Day	Night	Heat Load
Aug. 7	1397	566	66	64	147	80	
Aug. 8	1398	957	65	63	140	83	
Aug. 9	1453	744	64	64	148	87	
Aug. 10	1172	1056	66	65	145	85	
Aug. 11#	66	-266	67	66	128	79	
Aug. 12#	-212	-117	67	67	109	75	
Aug. 13#	97	129	70	70	139	73	
Aug. 14	1673	954	70	70	130	76	
Aug. 15	1542	1025	60	63	125	76	
Aug. 16	1621	904	57	57	125	78	
Aug. 17	1544	887	58	57	136	78	
Aug. 18	1961	473	57	57	132	78	
Aug. 19	2242	1215	68	62	120	75	3056*
Aug. 20	2173	1094	75	63	130	70	3056*
Aug. 21#	1779	-233	85	73	121	70	3056*
Aug. 22	919	112[illegible]	75	72	122	81	
Aug. 23	-733	1046	70	65	124	75	
Aug. 24	1049	1010	71	62	119	69	
Aug. 25	1613	843	67	61	128	69	1528*
Aug. 26	1117	817	61	60	131	74	
Aug. 27	1498	349	67	61	140	83	
Aug. 28	703	567	68	65	113	78	433*
Aug. 29	482	874	65	66	100	67	504+
Aug. 30	292	120	59	59	79	63	
Sept. 1	252	518	59	58	89	65	
Sept. 2	618	618	59	58	115	69	
Sept. 3	562	694	58	56	124	71	
Sept. 4	950	743	55	54	129	69	
Sept. 5	591	1113	55	53	120	64	460+

Blank days (the tubes were filled with air)
* Heat load on the east side BTU's
+ Heat load on the west side BTU's

Discussion: prototype testing

ABS plastic piping was easy to construct with no leaks but the material was not able to withstand the temperatures which are reached in the collector. Temperatures in the

collector reaching 190° F softened the plastic tubes until they were no longer able to support a vacuum. Aluminum is an inexpensive substitute for the ABS piping, capable of withstanding the collector operating temperatures, but the required manifolds to connect the pipes in the original collector and evaporator design are costly to buy and difficult to build properly. The third prototype did not use manifolds and was not as susceptible to leaks as the first two prototypes, since there were half the joints, and a leak in one joint disrupts only one tube and not the whole refrigeration system

The straight tube solar refrigerator tested gave a cooling rate of up to 760 BTU's of cooling per 20-foot tube, or 253 BTU's per square foot of pipe exposed to sunlight. Figure 20 shows the amount of cooling accomplished in BTU's per each aluminum tube for the month of August 1986. Also shown is the average temperature ° F reached by the collector during the day, the scale is the same. The amount of cooling accomplished by the tubes was related most strongly with the average daily collector temperature. This relationship is graphed in Figures 21 and 22. The higher collector temperatures clearly gave the highest cooling levels. The cooling was approximately equal to:

$Q = 0.0412*(\text{collector temperature } ^\circ F)^2 - 246$

as found from Figure 21. Average temperatures less than 120° F gave little if any measurable cooling. This agrees with the lab expermentation showing that temperatures of 130° F are

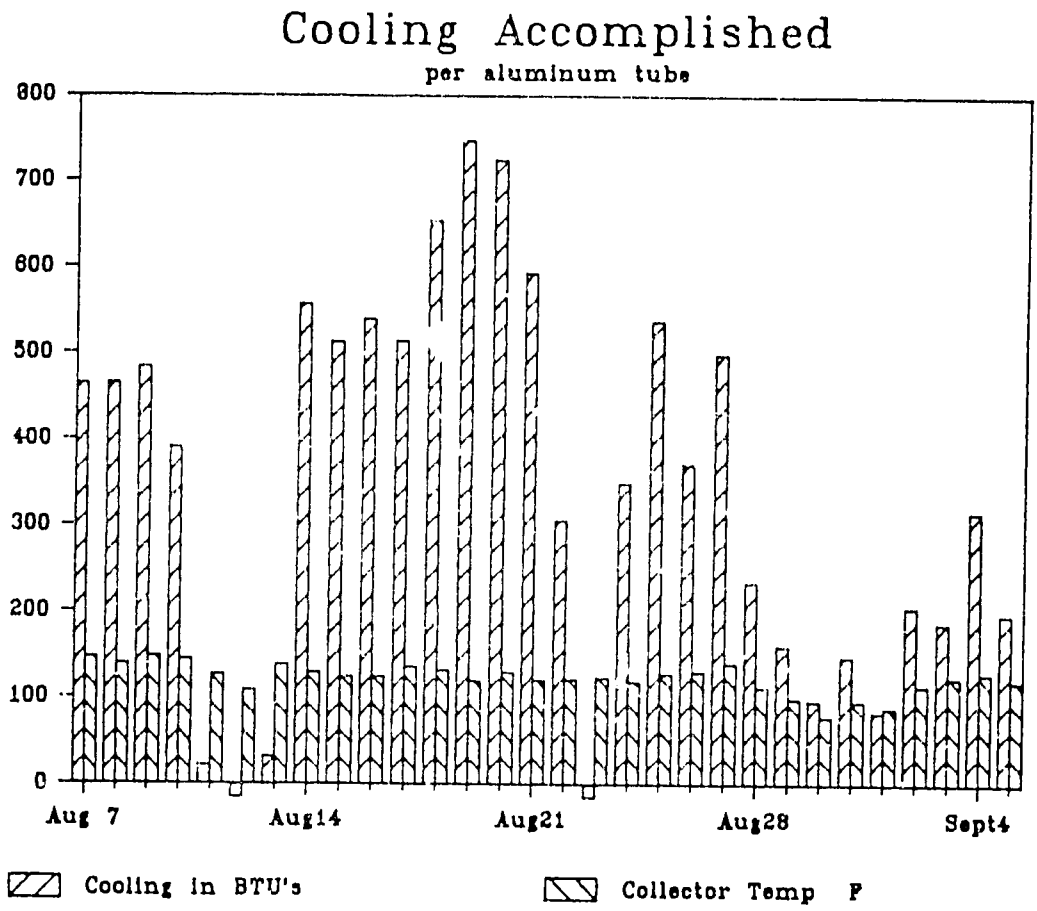

Figure 20

The amount of cooling accomplished in BTU's per each aluminum tube is shown in the bar graph above. Also shown is the temperature of the collector tubes for the same days. The days showing relatively high cooling August 19,20,21,25, and 27 are when heat was added to the cool box bladder.

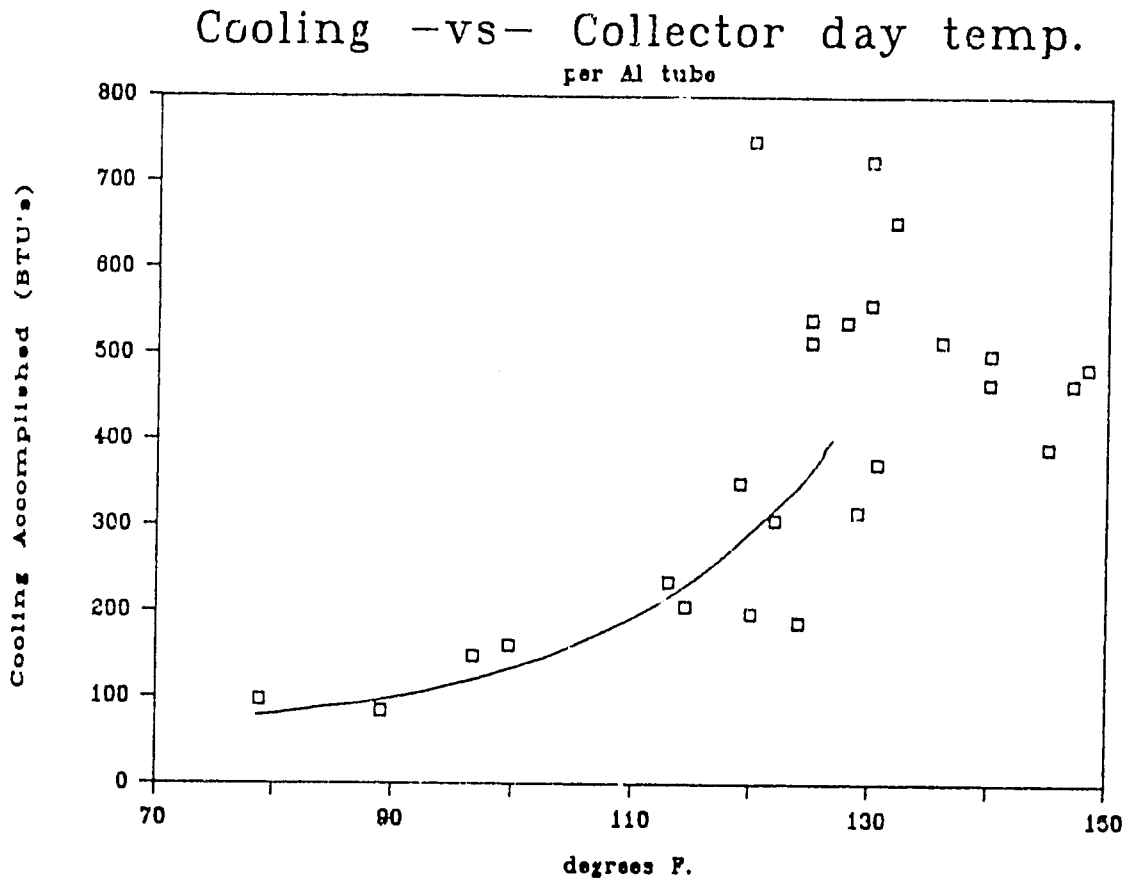

Figure 21

This graph shows the relationship between the cooling per aluminum tube and the average daytime temperature of the collector. Each point is for a different day in August.

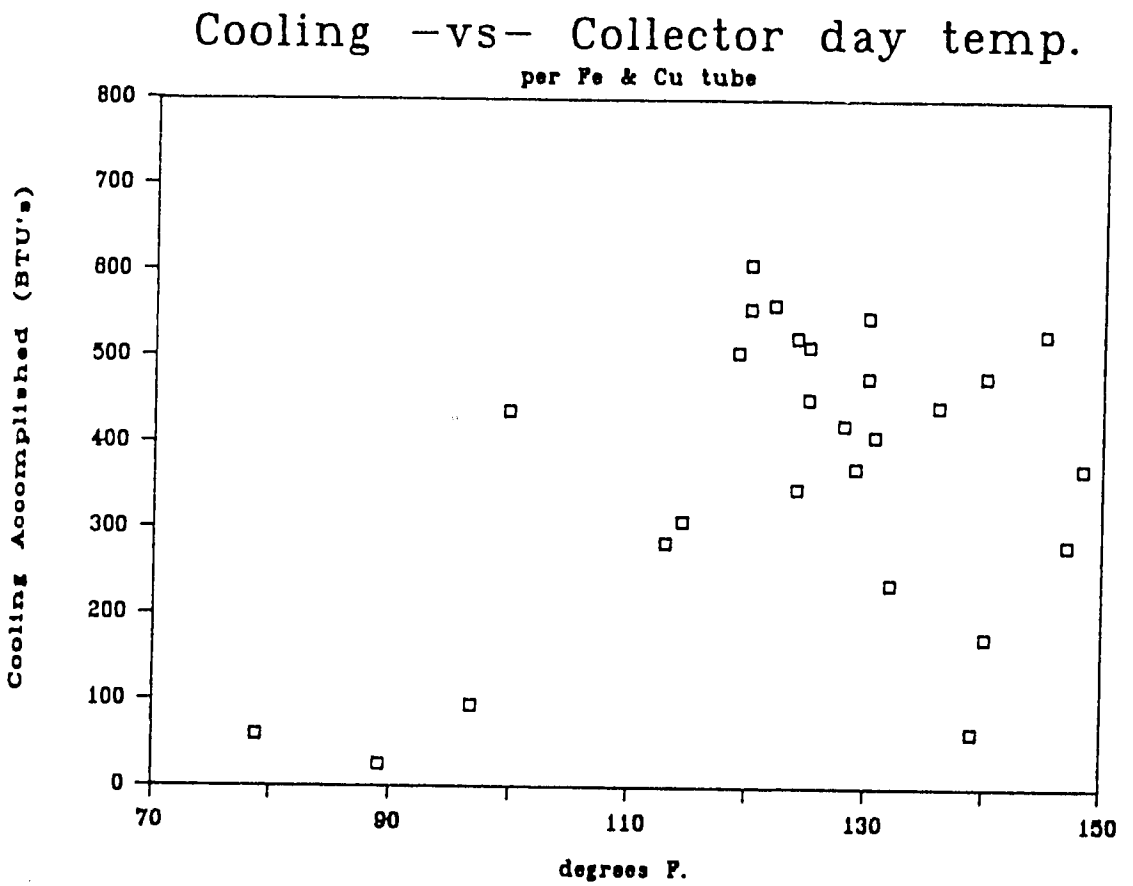

Figure 22

This graph shows the relationship between the cooling per steel and copper tubes and the average daytime temperature of the collector. Each point is for a different day in August.

needed before significant desorption and zeolite regeneration will begin.

Chang and Roux (3) showed in their mathematical thermodynamic analysis of a zeolite water solar refrigeration system that the major factor in performance is the collector type and efficiency, which has a direct relationship with the collector temperatures reached. This is a logical correlation since the greater the energy input and temperature swing in the collector, the greater the the amount of water desorbed/ adsorbed.

Another important factor affecting cooling capacity is the heat load placed upon the cool box. The two days which show the greatest cooling (August 19 & 20) are also when the greatest heat load was placed on the system (Table A). The cooling accomplished was increased by 31 percent of the heat load applied to the system. This is shown again on August 25 & 27 when the cooling accomplished was increased by 28 percent of the heat load of 1528 BTU's.

The zeolite to water ratio does have an effect on the cooling accomplished by the refrigerator. Figure 23 shows the percent improvement of the actual cooling to the cooling predicted from the laboratory experimentation and the temperatures reached in the collector. The high ratio of 9.13 prior to August 10 shows no improvement, whereas the days after August 10 show up to 95 percent improvement with a ratio of 4.6:1.

The night temperature of the solar collector appears to

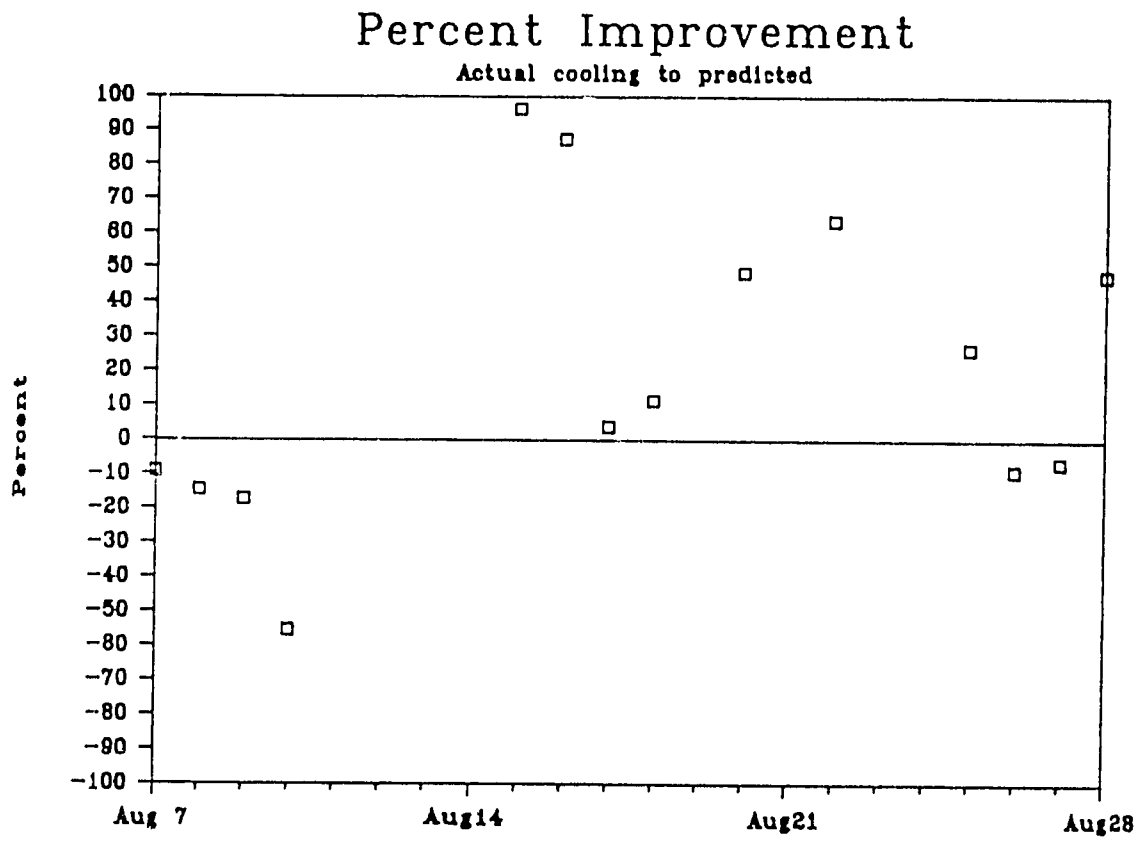

Figure 23

Using the high and low temperatures reached by the collector and the data found in the laboratory a predicted amount of cooling was found. This graph shows the amount of improvement the actual cooling was, when compared with the predicted cooling. The amount of water loaded in the collector tubes was doubled on August 10 and the result is an increase in the percent improvement.

have a smaller correlation to cooling capacity than the lab data indicated. Figure 24 is a plot of cooling as a function of the night time collector temperature. The amount of cooling remains fairly constant at 500 BTU/tube when the average nighttime temperatures remained in the 80's. The cooling is more a function of the difference between day and night temperatures in the collector than of the night temperature alone. Cooling as a function of the difference between daily average and nightly average collector temperatures is plotted in Figure 25. As the temperature difference becomes greater so does the cooling accomplished. Day night differences of 45° F and greater showed the best cooling.

Figure 26 shows the temperature profiles for the ambient, the east bladder and the west bladder temperatures for a 60-hour period beginning at midnight August 26. The time period up to hour 40 is typical for normal operation. Temperatures are maintained between 55 and 65 ° F inside the cool box. At hour 40 corresponding to 4:00 p.m. August 27 the electric heater inside the east bladder in the cool box was activated, and 1521 BTU's of heat were added to the thermal mass inside the bladder. The temperature rose to 82° F as a consequence of the added heat, but was cooled by the action of the refrigerator to 63° F by hour 55 at 7:00 a.m. August 27. Forty-seven percent of the added heat was removed by the refrigeration system.

Of the three materials used, aluminum, copper and steel

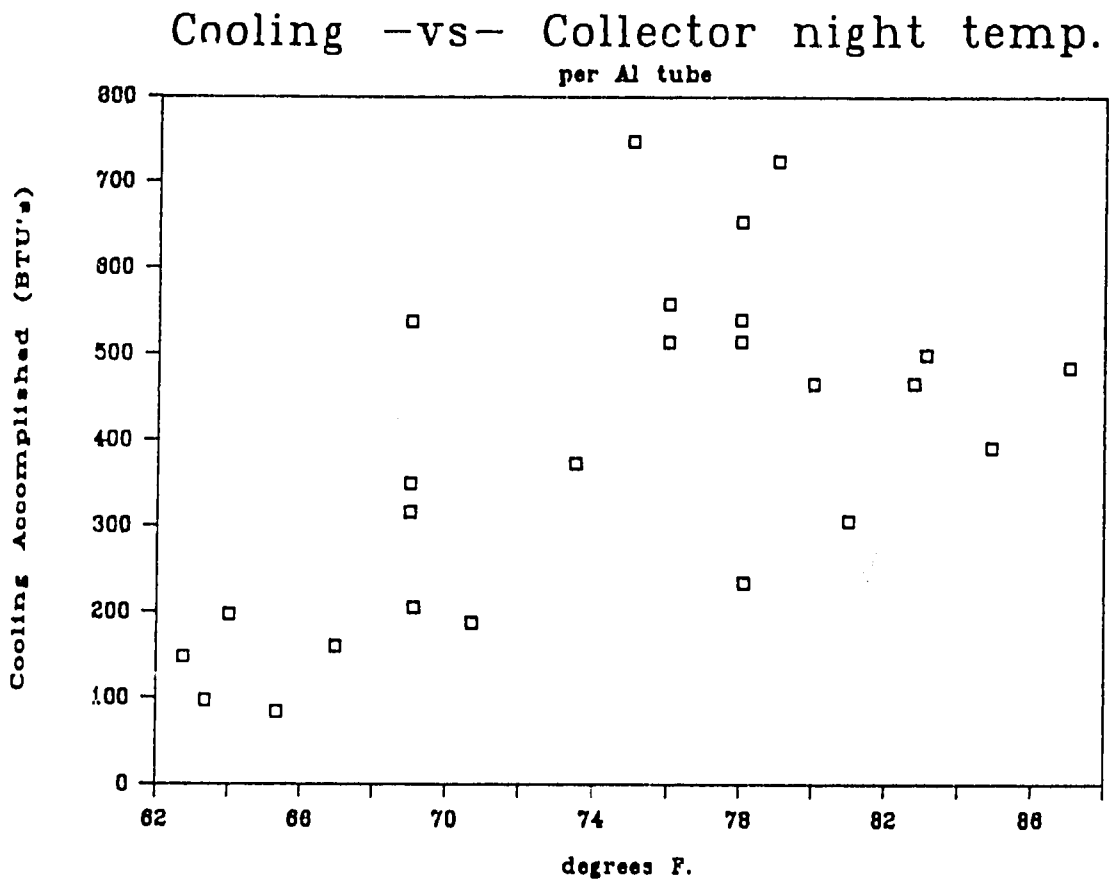

Figure 24

The amount of cooling was graphed against the average nighttime temperature of the collector tubes for the month of August. Little correlation was seen between the points. The lower temperatures experienced by the collector should dramatically increase the cooling. But the cooler nights also mean cooler days and days of less solar insolation.

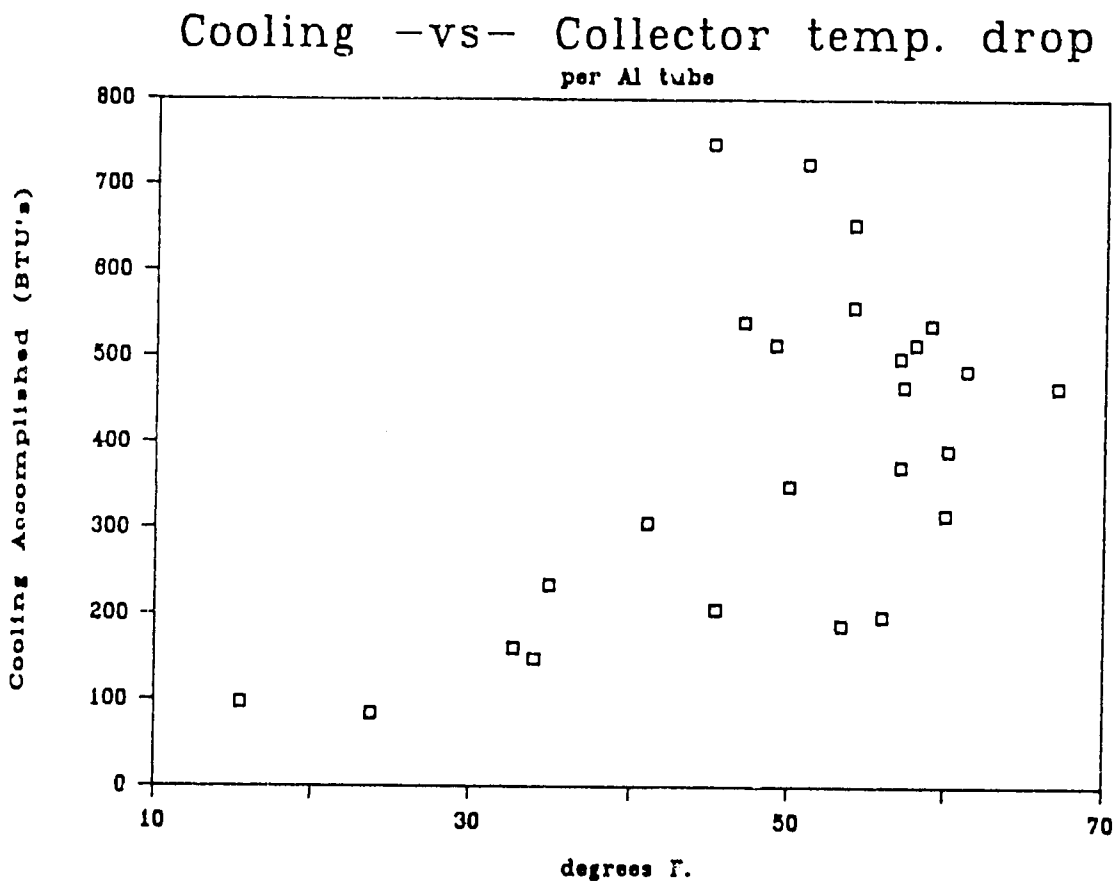

Figure 25

This graph shows the cooling as a function of the difference between the day and night temperatures attained by the collector during the month of August.

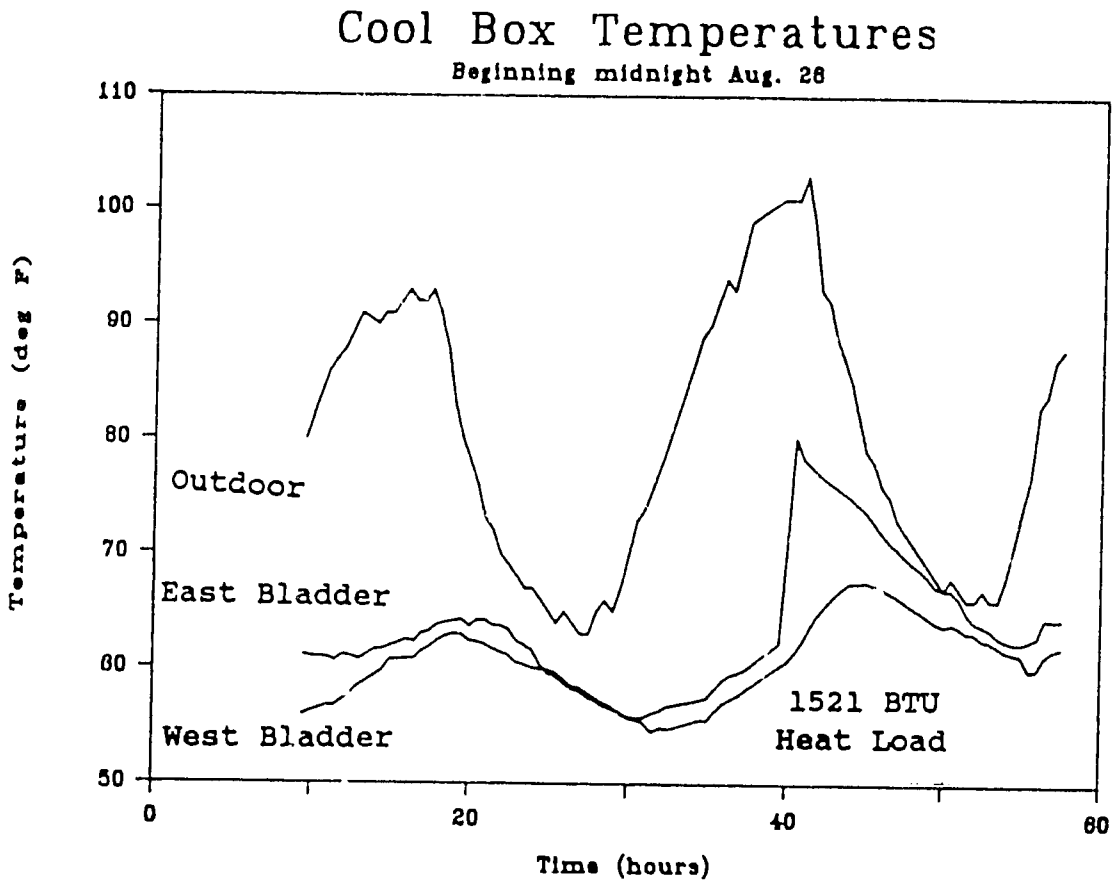

Figure 26

The temperatures for the outdoor air, east bladder and the west bladder are shown above for the 60-hour period following midnight August 26. At hour 40 a heat load of 1521 BTU's was added to the east bladder.

pipe, there were no significant differences in performance. The materials were evaluated in two groups, the three aluminum tubes in one and the copper and steel pipes in the other. Both showed the same trend with collector temperature and had similar values for cooling accomplished (Figures 21 & 22). The average cooling for the aluminum tubes was 410 BTU/tube and 400 for the copper and steel pipes.

The materials used did show great differences in ease of construction. The steel pipe was by far the simplest to construct. The threaded fittings and seamless walls made good air seals the first time. The aluminum pipes, possibly because of the amount of practice in constructing the second prototype, were also easy to build with good seals. The most time consuming joints were the soldered joints of the copper pipe. The large 3-inch copper pipe required over an hour of heating with a acetylene torch to perform the soldering on each end. This compares with 10 minutes per end for the steel pipe and 30 minutes for the aluminum plugs including the manufacture of the plug joints. A third pipe, muffler tubing, was also tested and found to have considerable leaks along the factory welded seam, and was unacceptable for use.

Although the manufacture was relatively easy for the steel pipe, it posed some difficult transportation problems. The pipe itself weighed 160 pounds and with the zeolite and internal piping was over 200 pounds. Two people were required to move it. The aluminum pipe was the easiest to transport, and when filled with zeolite and evacuated, each tube weighed

50 pounds and was easily moved by one person. The plug seals at the ends of the aluminum pipe were more fragile than either the threaded or soldered fittings. Damage to the ends was avoided but could easily lead to a leak in the joint if the tubes were handled carelessly.

CONCLUSIONS

From the labroratory experimentation and the temperature data collected in August, the amount of water to desorb from the zeolite during the day cycle in the third prototype was predicted and ranged from 0 to 2.1 percent of the dry zeolite. The predicted adsorbed water during the night cycle ranges from 2 to 3.5 percent. Because the amount of desorbed water is less than the adsorbed water the limiting factor in the third prototype design is the water desorption cycle or collector temperature. If higher temperatures would have been reached, more water would have been desorbed, matching the amount of water adsorbed.

Collector temperatures in the first prototype reached 200° F. The collector of the third prototype reached only 160° F. There are several differences between the two collectors. The angle in relation to the horizontal was 45° for the manifold system and 25° for the single tube system. The incident sunlight on the angled collectors averaged 2061 and 2171 BTU/day for the manifold and single tube prototype, respectively, slightly higher for the single tube design. The

styrofoam insulation used in each collector was treated differently. The insulation was painted black in the third prototype and left white in the manifold system. The amount of sunlight reflecting from the white insulation to the back sides of the collector tubes may have substantially increased the amount of solar radiation reaching the zeolite. Also the density of tubes in the collector is greater in the third prototype where the tubes occupy 63 percent of the area exposed to sunlight. In the manifold system the tubes occupy only 50 percent.

Future designs should include greater spacing between collector tubes, with the space between tubes equal to the tube diameter as in the manifold system. They should also maximize the amount of solar energy reflected from the insulation to the back sides of the collector tubes, by leaving the surface of the insulation white, or painting it white. Another option is the use of smaller diameter pipe, giving a greater surface area per internal volume. But diameters less than 2.5 inches would require more tubes and thus greatly increase the costs for both materials and construction.

The materials cost of a system capable of keeping a 100 cubic foot volume at 65° when outside temperatures are 85°, and also cooling 100 pounds of produce from 95 to 65° is $1103 including the costs for cool box construction materials and support framing for the aluminum system and $2593 for a system made from schedule 40 steel pipe. A comparable electric vapor

hour would be $230 for a compression system and $300 for cool box construction, and use $41 of electricity per year ($0.08/KW). An absorption system utilizing propane would be $1500. If the aluminum system can withstand the rigors of continual operation its construction can by justified economically, since there are no energy costs. Also if the collector portion of the system can be made more efficient and warm the zeolite to more than 160° F, the amount of refrigerator tubes can be decreased or the loading increased.

RECOMMENDATIONS FOR FUTURE WORK

Future work for this project can spread in several different areas. Properties of the zeolite need to be evaluated further; the existing lab apparatus can perform this function. Both existing prototypes should be modified to repair their problems and improve their cooling efficiency. Field tested prototypes can also be built to test the operation and construction of refrigerators on location.

Future Lab Experimentation

Two water adsorption properties of the zeolite should be evaluated, the heat of adsorption of water on the zeolite, and the precise correlation between zeolite temperature and water content on water vapor pressure. Supply a known and constant supply of heat to the zeolite while measuring the rate of

water desorption. Neglecting the sensible heat changes of the zeolite, the heat of adsorption will be the rate of heat addition divided by the rate of water desorption.

To measure the correlation between temperature, pressure and water content, first dehydrate the zeolite in an oven at 650° F for several days. Measure accurately the weight of zeolite both before and after heating. Place the zeolite in the dried heating flask before significant amounts of water will readsorb. A different heating flask may be constructed which would allow easier addition and removal of zeolite. Place a known amount of water into the evaporator which will not replace all the desorbed water. Evacuate the system and measure the pressure as a function of zeolite temperature. Add more water to the evaporator in several more increments until water is observed desorbing from the zeolite throughout the heating cycle, taking note to measure the amount of desorbing water over time. Use the data collected to generate plots of water vapor pressure as a function of water content in zeolite and zeolite temperature. The temperatures investigated should range from 50 to 180° F.

Future Work on Existing Prototypes

The manifold system has had continued sealing problems. Finding the leaks and sealing them would help that system's performance. In addition, all the remaining plastic parts should be removed and replaced with metal. The evaporator

could be replaced with a five gallon propane tank, and the joints between the collector and condenser should be made wit welded aluminum. Alternatively, the condenser can be replace entirely with 1 1/2 inch copper tubing, and standard copper elbows to make the required turns.

Because the third prototype has more defined weak points the suggestions for future work are more extensive. They consist of improving the operating collector temperatures, anc enhancing the heat transfer characteristics in the condenser and evaporator. Also the long term durability of the end caps for the aluminum tubes should be tested. The pressure in the tubes needs to be measured periodically to do this.

Improving collector operating temperatures will increase the amount of cooling the refrigerator can provide. There are three ways to increase the amount of solar radiation reaching the zeolite in the collector tubes. Increase the sunshine reaching the surface of the tubes, increase the amount of sunshine to be absorbed by the tube surface, and decrease the heat loss to ambient air.

Replace the existing black insulation in the collector box with white insulation, this will reflect sunlight to the back portions of the collector tubes and increase the amount of solar irradiation reaching the tube. Also raise the tubes an inch above the insulation. A different cover with a higher transmissivity would also increase the amount of sunlight reaching the tubes. Glass would be the best but may be impractical. A thin fiber glass sheet with a transmissivity

greater than 0.85 is suggested. Lastly, a reflector directing additional sunlight towards the collector may be constructed. Aluminum foil over a plywood backing would perform well.

A good flat black surface is needed to absorb as much of the incoming radiation as possible. All the collector tubes need to be repainted with flat black paint.

The collector needs to be well insulated and sealed from air drafts to obtain higher temperatures. The joint between the cover surface and the collector should be sealed, not allowing air to flow under the cover and into the collector box. The ends should be sealed to keep air drafts from reaching the collector tubes. Natural convection from the tubes can be lessened with the addition of horizontal baffles inside the collector box. These measures can be taken to improve the efficiency of the collector.

In addition to high daytime temperatures the collector should be cooled at night. Louvers or vents can be placed on the collector to allow air to circulate through the collector box and cool the collector tubes. These vents should be opened at night and closed during the day. To subcool the tubes spray the collector cover with water, or the collector tubes themselves.

The maximum difference between night and day collector temperatures will provide maximum cooling. Not all the previous suggestions need be carried out to attain the maximum temperature difference.

Better heat transfer in the condenser and evaporator may

be needed when the collector operating temperatures are optimized. The condenser was successfully cooled to 10° F below ambient temperatures by wrapping wet burlap around the condenser and keeping a stream of water dripping on it. Increasing the effective heat transfer area by the addition of fins, to either the condenser or evaporator sections, would benefit the heat transfer from those components. Natural convection is the only means of heat transfer in the cool box. The natural convection can be enhanced by placing warm produce at the bottom of the box and moving the cool material to the top.

The construction of a new cool box with a design more compatible for produce storage is another important project to be completed. The new box should be 5' X 4' X 2.5' and have six inches of insulation. The new box could then be used for actual crop storage, and internal heat transfer studies.

BIBLIOGRAPHY

1 Tchernev, D.I., "Solar Refrigeration Utilizing Zeolites" Proc Intersoc Energy Convers Eng Conf, 14th, volume 2, Boston, Mass, Aug 5-10, 1979, IEEE (Cat n 79CH1477-9 ENERGY), Piscatawav, NJ, p2070-2073.

2 Munier F.; Mischler, B.; Guilleminot, J.J.; Simonot, M.H. "On the Use of a Zeolithe 13X-H//20 Intermittent Cycle for the Application to Solar Climatization of Buildings", Sun 2, Proc Int Sol Energy Soc Silver Jubilee Congr, Atlanta, Georgia, May 1979, Volume 1, Pergamon Press, Elmsford, NY 1979, p739-743.

3 Chang S.C.; Roux J.A., "Thermodynamic Analysis of a Solar Zeolite Water Refrigeration System", Journal of Solar Energy Engineering, Volume 107, p189-195.

4 Mumpton, F. A., Minerology and Geology of Natural Zeolites ed., Mineralogical Soc. Am. Washington D.C., 1977, p177-204.

5 Leppart, D. "The Uses of Natural Zeolites", Proceedings of the 22nd Symposium on Engineering Geology & Soil Engineering, 1986, p502-509.

Appendix A

Construction of a Zeolite-Water Solar Refrigerator Utilizing the Single Tube Design

Introduction

The Zeolite-Water Solar Refrigerator is an adsorption refrigerator which uses water as a working fluid, naturally occurring zeolite as an adsorbant, and sunlight as a heat source. It operates in two cycles: the day or desorption cycle and the night or adsorption cycle. This manual describes how to construct a zeolite-water solar refrigerator using locally available materials and skills.

During the day sunlight warms the zeolite held in the collector portion of a refrigerator tube shown in Figure 1. This drives off some of the water held in the zeolite. The desorbed water is condensed in an air cooled condenser which is merely an extension of the collector portion of the refrigerator tube. If the refrigerator tube is tilted slightly the water will drain into the evaporator end of the tube.

All the cooling takes place during the night or adsorption cycle. When the sun sets, the collector and the zeolite within cools off. At the cooler temperatures, the zeolite begins adsorbing the water vapor which was desorbed during the previous day. Water evaporates from the evaporator section to replace the water adsorbed by the zeolite. This is where the actual refrigeration is accomplished.

For greatest cooling by the zeolite-water solar refrigerator, the daytime collector temperatures must be maximized while keeping the condenser as cool as possible. Collector temperatures must reach 170 degrees Fahrenheit during the day for the refrigerator to operate. The collector also must cool to 80 degrees or lower at night.

As with all refrigeration systems, only the working fluid can be present in the system with the adsorbant. Therefore the refrigeration tubes must be evacuated of all air. The presence of even small

ZEOLITE WATER SOLAR REFRIGERATOR

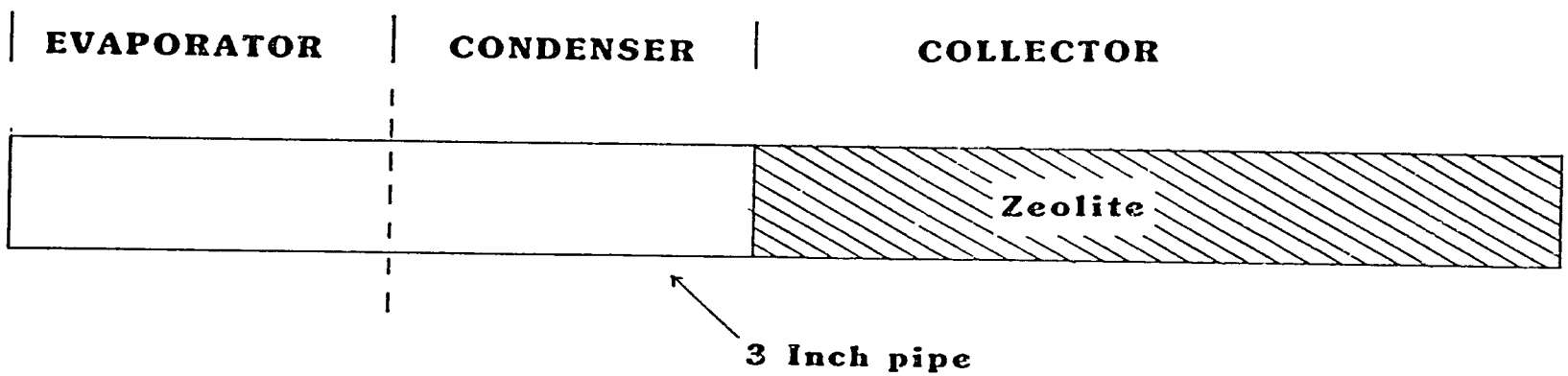

figure 1

Not drawn to scale

quantities of air in the system will render it inoperable.

A general layout for the construction is shown in Figure 2. The dimensions labeled are for the interior of the cool box and the collector system. The refrigerator tubes are supported by a collector frame and inserted into an insulated cool box. The whole unit is pointed so that the cool box faces the equator, and is placed in a location where the collector will not be shaded by trees or tall buildings. This manual will describe how to determine the sizes of these components and how to make the refrigerator tubes.

The cool box holds the produce to be stored. It needs to be large enough to contain the refrigerated crop, and well insulated to keep it cool. The cool box also holds the evaporator ends of the refrigerator tubes, which are constructed of three inch diameter pipe sealed at both ends and partially filled with zeolite. Any seamless metal pipe of about 3 inches in diameter will work for this purpose. Many tubes are used in the construction of a zeolite-water solar refrigerator. They are laid side by side, supported by a collector frame with one end inside the previously described cool box.

Naturally occurring zeolite is found in many volcanic deposits. It is a porous material similar to some clays. It is currently used industrially as a chemical adsorbant, and domestically as cat litter. The zeolite used for refrigeration should be in the form of coarse granules of about 1/4 inch diameter. No organic material such as wood or grass should be present.

SOLAR REFRIGERATOR

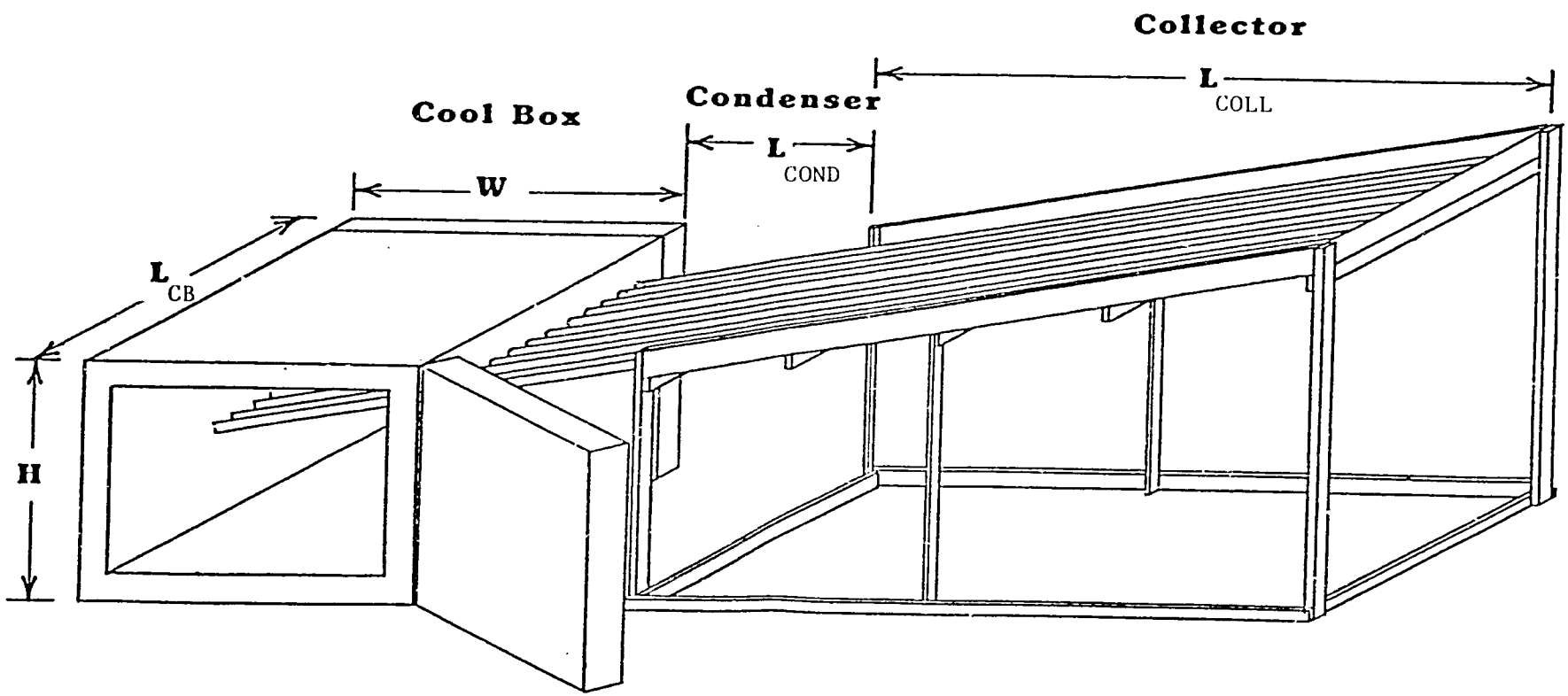

figure 2

Section 1 - Cool Box

Section 1.1 - Cool Box Sizing

The first step in building a Zeolite-Water Solar Refrigerator is determining the volume required for the cool box. This can be estimated from the amount of material to be loaded in it each day, and the number of days the material will need to be stored. The following equation will give the volume required for the cool box in cubic feet.

$$V = 0.038XY \qquad (1)$$

where V = Required volume of the cool box in cubic feet.

X = Pounds of material to be cooled each day.

Y = Time in days the material needs to be stored.

This assumes a specific gravity of 0.6 for the material to be cooled and a void space of 30%. The inner dimensions of the cool box should measure about 3 feet high and 4 feet wide. Therefore, the interior length in feet of the box can be found using the following equation.

$$L_{CB} = V/12 \qquad (2)$$

where L_{CB} = Interior length of the cool box in feet.

12 = The product of 3 feet times 4 feet.

The surface area of each side of the cool box can be calculated using the following equation.

$$A = W\ L \qquad (3)$$

where A = Area of one side of the cool box in feet squared.

W = Width of side in feet.

L = Length of side in feet.

Example 1.1

400 pounds of produce is harvested each day, 6 days per week. On the seventh day the week's harvested crop is taken to the local market. How large does a cool box for a Zeolite-Water Solar Refrigerator need to be to hold this produce?

Solution:

Using equation (1) the cool box volume V needs to be,

$$V = 0.038XY$$

where X = 400 pounds per day

Y = 6 days

$$V = 0.038(400)(6)$$

$$V = 91.2 \text{ cubic feet}$$

Using equation (2) the interior cool box length needs to be.

$$L_{CB} = V/12$$

where V = 91.2 cubic feet

$$L_{CB} = 91.2/12$$

$$L_{CB} = 7.6 \text{ feet}$$

The size of the cool box interior therefore needs to be 4 feet by 3 feet by 7.6 feet with an interior volume of 91.2 cubic feet.

Section 1.2 - Cool Box Construction

The cool box can be constructed from local materials. It should have walls at least 6 inches thick filled with a good insulating material.

Materials for the construction of the cool box can include plywood,

wooden boards, cinder blocks, cement blocks, aluminum siding, stainless steel or whatever material is available which will make a sturdy, well insulated box with at least 6 inch thick walls. The insulation in the walls can include cotton, sawdust, styrofoam, or nearly any dry fluffy material which will not pack down.

The box should have at least one door to provide access to the material within.

It must be emphasized that cool box construction is not instrumental to the success or failure of the refrigerator. Any combination of construction materials which will make a box to hold and insulate the material to be cooled will work.

Section 2 - Cooling Requirements

The cooling load placed on the refrigeration system comes from two different areas. The first is the initial cooling demand needed to cool the harvested produce to the desired temperature, and the second is from the heat being transferred through the cool box walls from the atmosphere to the cool produce within.

Section 2.1 - Initial Cooling Demand

Initial cooling demand is the cooling required to cool the harvested crop from warm ambient temperatures to the desired cool box temperatures. The magnitude of this cooling depends on the weight of material to be cooled, and the difference between the ambient and the cool box temperatures. If the specific heat value for the produce is assumed to be the same as water (1 Btu per pound degree Fahrenheit) then the initial cooling demand can be found using this equation,

$$Q_L = X(T_{AMB} - T_{CB}) \qquad (4)$$

where Q_L = Initial cooling demand in Btu per day.

X = Pounds of produce to be cooled each day.

T_{AMB} = Ambient temperature in degrees Fahrenheit.

T_{CB} = Temperature desired in the cool box in degrees Fahrenheit.

Example 2.1

400 pounds of produce are to be cooled from ambient temperatures of 95 degrees Fahrenheit to 60 degrees Fahrenheit each day. What is the initial cooling demand?

Solution:

Using equation (4)

$$Q_L = X(T_{AMB} - T_{CB})$$

$$Q_L = 400(95-60)$$

$$Q_L = 14{,}000 \text{ Btu per day}$$

Fourteen thousand Btu's of cooling is therefore required each day to cool the harvested crop from 95 to 60 degrees Fahrenheit.

Section 2.2 - Cooling Demand from Atmosphere

The amount of heat which will leak through the walls of the cool box also places a cooling load on the refrigerator. The amount of this load depends on the total surface area of the cool box, the difference between the outside temperature and the temperature inside the cool box, and the insulating material used. The following equation used in conjunction with Table 1 can be used to find the daily cooling demand from the

atmosphere.

$$Q_A = \frac{A(T_{AMB} - T_{CB})}{Rt + 0.11} \qquad (5)$$

where Q_A = Daily cooling demand from the atmosphere.

T_{AMB} = Ambient temperature in degrees Fahrenheit.

T_{CB} = Temperature inside the cool box.

R = Insulating rating (from Table 1)

t = Insulation thickness in inches.

A = Total outside surface area of the cool box in square feet (using Equation 2 for each side and summing the four sides plus two ends)

Table 1

Material	R-value
cotton	0.17
wood fiber	0.17
sawdust	0.092
corkboard	0.15
fiberglass	0.16
polyurethane	0.23
styrofoam	0.16

Example 2.2

The inner dimensions of the cool box sized in Example 1.1 measures 4 feet by 3 feet by 7.6 feet. With a wall thickness of 6 inches, the outer dimensions will measure 5 feet by 4 feet by 8.6 feet. What is the cooling demand from the atmosphere if the ambient temperatures are 95 degrees Fahrenheit, the cool box temperature is 60 degrees, and sawdust is used as insulation?

Solution:

The surface area of the box is the sum of the surface areas of the sides. Top and bottom measure 5 feet by 8.6 feet for an area of 86 square feet, the sides are 4 feet by 8.6 feet for an area of 68.8 square feet, and the ends measure 4 feet by 5 feet for an area of 40 square feet. The total surface area is 194.8 square feet. The cooling load using equation (5) from the atmosphere becomes:

$$Q_A = \frac{A(T_{AMB} - T_{CB})}{Rt + 0.11}$$

$$Q_A = \frac{194.8(95-60)}{(0.092)(6)+0.11}$$

$$Q_A = 10{,}300 \text{ Btu per day}$$

The cooling demand from the losses to the atmosphere is therefore ten thousand three hundred Btu's per day.

Section 2.3 - Total Cooling Demand

The total cooling demand for the refrigerator is the sum of the initial cooling demand and the cooling demand from the atmosphere.

$$Q_T = Q_A + Q_L \qquad (6)$$

where Q_T = Total cooling demand.

Example 2.3

What is the total cooling demand for the cool box described in Examples 2.1, 2.2, and 2.3?

Solution:

Using equation (6)

$$Q_T = Q_A + Q_L$$

$$Q_T = 10,300 + 14,000$$

$$Q_T = 24,300 \text{ Btu's per day}$$

Section 3 - Refrigeration System

The refrigeration system consists of the refrigerator tubes which contain the zeolite and collect the solar energy. This section describes the sizing of the refrigerator tubes.

Section 3.1 - Collector Sizing

When the cooling demands are found then the actual refrigeration system can be sized. The surface area of the collector depends on three things: the cooling load found in Section 2, the rate of daily insolation, and the efficiency of the collector. This is shown in the following equation.

$$A_C = \frac{Q_T}{eI} \qquad (7)$$

where A_C = Total surface area of the collector in square feet.

Q_T = Total cooling demand in Btu's per day.

e = Collector efficiency.

I = Daily rate of solar insolation in Btu's per square foot day.

The daily insolation is the heat provided by the sun to the earth. It varies with location on earth, time of the year, and climatic conditions. Hilo, Hawaii, USA averages about 1440 Btu's per square foot

per day. Of course on cloudy days this number will be smaller. The collector efficiency was found experimentally to be about 0.052, using a collector system located in Moscow, Idaho USA. It is the ratio of cooling output by the refrigeration system to the total daily insolation.

The collector will have one side the same length as the inside of the cool box. The other dimension can be found by dividing the collector area found in equation (7) by the inner length of the cool box.

$$L_{COLL} = \frac{A_C}{L_{CB}} \qquad (8)$$

L_{COLL} = length of collector section in feet.

Example 3.1

Using the cooling demand from Example 2.3 and the average daily insolation rate in Hilo, Hawaii of 1440 Btu per square foot day, find the surface area and dimensions of the solar collector.

Solution:

Using equation (7)

$$A_C = \frac{Q_T}{eI}$$

$$A_C = \frac{24300}{(0.052)(1440)}$$

$$A_C = 325 \text{ square feet}$$

Using equation (8)

$$L_{COLL} = \frac{325}{7.6}$$

$$L_{COLL} = 43 \text{ feet}$$

The solar collector therefore will be 7.6 feet by 43 feet and have an area of 325 square feet.

Section 3.2 - Condenser Sizing

Water vapor which is being desorbed by the zeolite during the day cycle releases a great deal of heat when it condenses. The condenser needs to dissipate this heat to the air. The size required for adequate heat dissipation is a function of many factors including ambient temperatures, wind velocity and direction, absolute humidity and rate of water desorption by the zeolite. Under most conditions a condenser length equal to one third of the collector length is adequate. The following equation can be used to find condenser length.

$$L_{COND} = \frac{L_{COND}}{3} \qquad (9)$$

Example 3.2

What is the condenser length for the refrigeration system described in Example 3.1?

Solution:

Using equation (9)

$$L_{COND} = \frac{43}{3}$$

$$L_{COND} = 14$$

The condenser length is 14 feet long.

Section 3.3 - Evaporator Sizing

The evaporator section of each refrigerator tube is wholly contained in the cool box. It should be as large as possible, therefore it is as long as the cool box is wide. In the case of the examples in this text this is 4 feet thus L_{EVAP} = 4 feet.

The total length of the refrigerator tubes will be the sum of the lengths of the collector, condenser, and evaporator.

$$L_T = L_{EVAP} + L_{COND} + L_{COLL} \qquad (10)$$

Example 3.3

What is the total length of a refrigerator tube in Examples 3.1 and 3.2?

Solution:

Using equation (10)

$$L_T = 43 + 14 + 4$$

$$L_T = 61$$

The total length of the refrigerator tubes is 61 feet.

Section 3.4 - Refrigerator Tube Construction

Now that the length of the refrigerator tube is known, the actual construction can begin. The construction of a refrigerator tube using aluminum irrigation pipe with an outer diameter of 3 inches and an inner diameter of 2.9 inches with aluminum plug seals is outlined here, but any other seamless metal pipe which can be sealed at the ends is acceptable. Construction techniques will vary with different types of pipe. Steel pipe may use threaded fittings or be welded, and copper pipe can be

soldered. The important factor during manufacture and pipe selection is the integrity of the end seals to obtain an absolutely air tight fit. An expanded view of a typical refrigerator tube is illustrated in Figure 3. All the components are shown, including two plug seals, a heavy sheetmetal disk, a 1/2 inch diameter inner pipe and a 3 inch diameter outer aluminum tube. Note that the drawing is not drawn to scale and appears much shorter than the actual tube.

The aluminum plugs to seal the ends of the pipe should be constructed first. They are shown in Figure 4. Solid aluminum stock with the same outer diameter as the refrigerator should be used. A metal lathe can be used to form the plugs. Two plugs are needed for each refrigerator tube.

One of the plugs for each tube needs to have several holes drilled into it. An OMEGA self sealing tap part #OPNE-14 or equivalent is used to evacuate the tube. Drill a hole completely through the plug and tap threads into it to fit the 1/4 inch pipe fittings on the self sealing tap, which will be screwed into the outer surface of the plug. Two smaller holes to fit 3/16 inch metal screws should be bored on the inner surface of the plug. Before inserting the self sealing tap, clean the threads of all cutting oil. Put a thin layer of silicone glue in the threads of the self sealing tap and screw it into the plug. Then turn the plug over and screw the 3/16 inch metal screws into the appropriate holes.

Take a piece of 1/2 inch pipe as long as the collector, and drill a 1/8 inch hole in it every 4 to 5 inches. Over one end of this pipe, slide a disk cut from 1/8 inch sheet metal. This disk should have a diameter of 2.85 inches and a 1/2 inch hole in the center. Flare the end of the inner pipe so that the metal disk cannot slide off the pipe. The

REFRIGERATOR TUBE ASSEMBLY

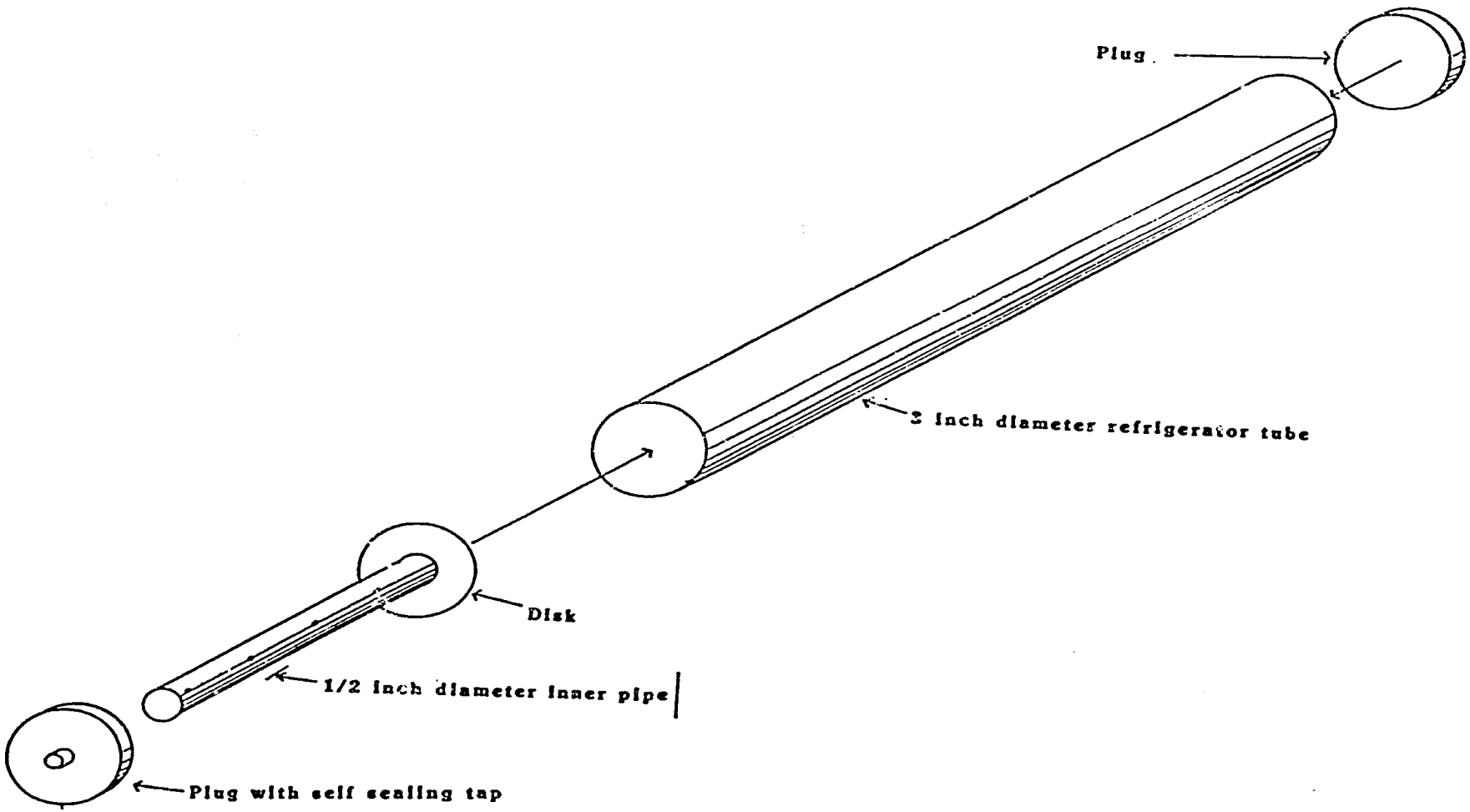

figure 3

Not drawn to scale

Plug Seals for 3 Inch Aluminum Pipe

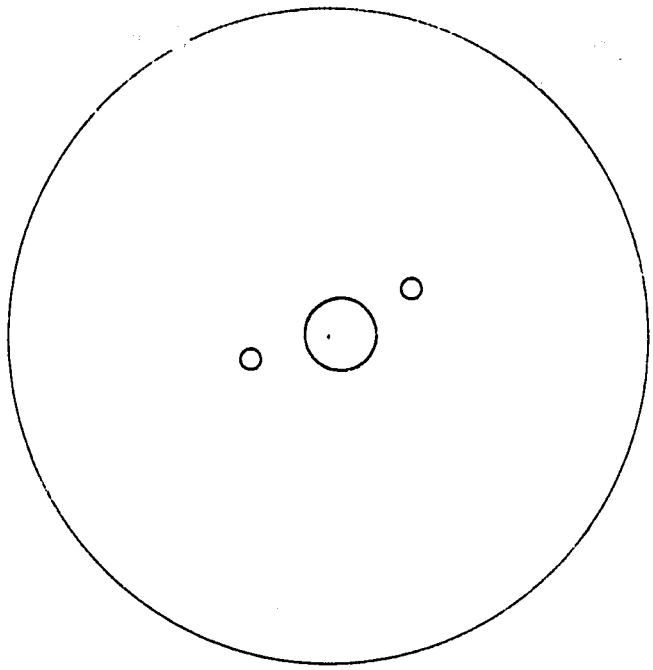

Top view

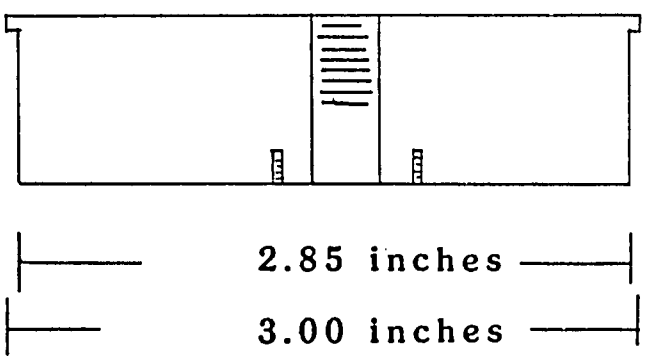

Side view

figure 4

function of the disk is to support and contain the zeolite in the collector section of the refrigerator tube: it must fit securely and snugly inside the aluminum tubing. Insert the inner pipe, disk end first, into the refrigerator tube, leaving several inches of the inner pipe protruding from the end of the refrigerator tube. Run an 18 inch piece of wire through the last two holes in the copper pipe. This wire will help support the inner pipe during zeolite loading, and afterwards.

At this point the zeolite can be loaded into the aluminum tube. The inner pipe with the sheet metal circle should be in place. To fill the tube with zeolite, place it nearly vertical against the side of a building or other high structure, with the end containing the copper pipe on top. Standing on the roof of the building, pour the zeolite down the tube, keeping the inner pipe from sliding down the aluminum tubing by support from the wire. About 2.5 pounds of zeolite per foot of collector length will fill the tube up. Keep in mind that the zeolite needs to be contained in the collector section of the aluminum tube. If zeolite pours from the lower end of the aluminum tube, the metal circle is not properly in place, and must be resituated.

Once the zeolite is in the aluminum refrigerator tube about three inches of the inner pipe should protrude from the aluminum tube. At this point lower the pipe to the ground. Wrap both ends of the wire to a 3/16 inch screw placed in an aluminum plug with threaded fittings described earlier. The inner pipe will hang from this wire and support the zeolite once the refrigerator tube is completed. Clean the plug and the interior of the aluminum tube in preparation for glueing. Push the inner pipe further down the aluminum tube until enough room is left for the plug. The wire should allow a space of no more than three inches between the

end of the inner pipe and the plug. Spread a uniform layer of silicone glue around the plug, and insert into the aluminum tube, leaving a gap of 1/8 inch between the end of the aluminum tube and the lip of the plug. Figure 5 shows how the plug should appear after it is glued in place. Inspect the gap to be sure it is full of glue with no pockets or air bubbles. This step is crucial. The seal between the plug and the tube must be perfect in order for the refrigerator to work! Allow the glue to cure 24 hours before disturbing the pipe again. Then glue a plug with no holes or threaded fittings to the other end of the aluminum tube, again allow 24 hours for the glue to cure.

When in place the distance between each tube should equal the diameter of the tube for adequate solar input. Therefore with 3 inch diameter tubes, 2 tubes are required per foot of collector width.

When the glue has cured the leak testing process can begin. Evacuate the tubes using the self sealing taps and the Gage Adaptor OMEGA part #GASS-18. Use a vacuum pump which can reach absolute pressures of 1 or 2 mm Hg. It should take at least 30 minutes to evacuate each tube properly. The absolute pressure attained should fall below 20 mm Hg. Measure and record the vacuum in each tube over a period of several days. If it has increased over this time then the plugs at the ends of the refrigerator tube are not sealing properly. If this is the case, allow air to enter the tube through the tap and apply a thin layer of glue around the plug joints. Let the glue cure and retest for seal. For accurate pressure measurement, the tubes should be placed in a shady area or in a building during the pressure testing period. If seal problems persist, remove the plugs, strip them of the glue, and glue them again. Once the tubes have been tested free of leaks, siphon 1 quart of water

Upper End of Refrigerator Tube

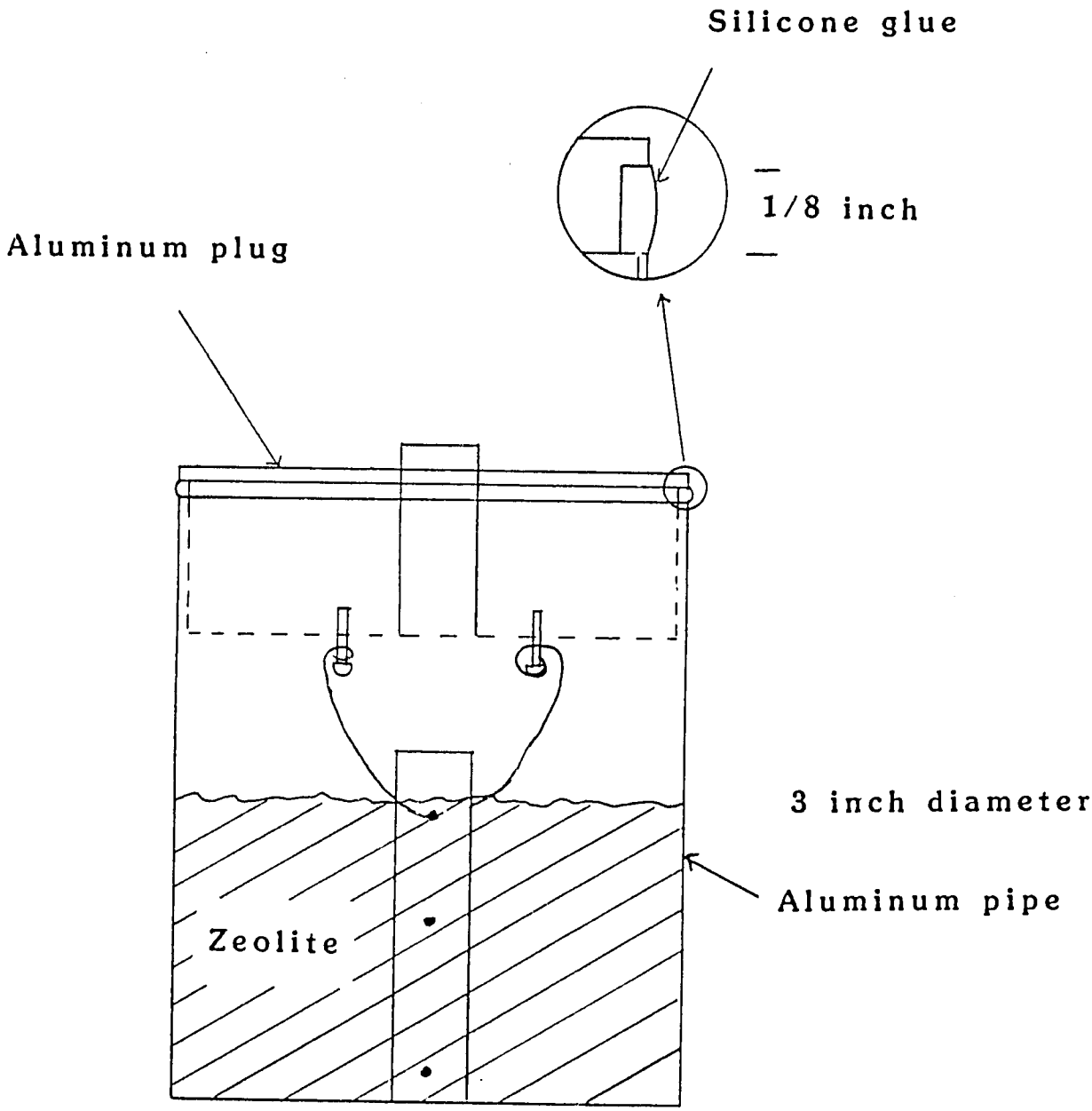

figure 5

for each foot of evaporator length into the refrigerator tube through the self sealing tap, and re-evacuate.

The refrigerator tubes can now be painted. Flat black paint should be painted on the collector end of each tube, to help absorb the sunlight. The remaining portion of the pipe does not need to be painted.

Section 4 - Collector Tube Support

The collector frame is used to support the refrigerator tubes and collect the solar energy needed to drive the refrigeration system. It is constructed similar to the roof of a building, with a slope of about 10 degrees. A typical wood frame construction is illustrated in Figure 2.

Lay a properly evacuated and leak tested refrigerator tube on the collector, and slide it through a hole cut into the side of the cool box. The end of the refrigerator tube containing the zeolite and painted black, with the self sealing plug attached should be on the collector frame, and the evaporator end placed in the cool box. Secure the tube with a U-bolt, bolted to the collector box frame. Repeat for the remaining tubes. Cover the whole collector with a thin layer of clear plastic, being careful to secure all edges of the plastic to the edge. Finally cover the condenser section area of the tubes between the cool box and the collector with some scrap plywood to shade the tubes from the sun.

Section 5 - Troubleshooting

When in operation the refrigerator tubes should be cool or cold at night inside the cool box. They will most likely have water condensing on them. Also the evaporator section between the collector and cool box

will feel warm to the touch after the collector has seen the sun for several hours. If these things do not happen when the collector has been exposed to the sun for several days then the refrigerator is not operating properly.

Most of the problems will be with the airtight seal at the ends of each refrigerator tube. Check the pressure of each tube, if it has increased since the initial evacuation then the seal is bad. Re-evacuate the tube, record the pressure and measure the pressure several days later during the same hour of the day. If it increases over this period reseal the end plugs.

If the airtight seal is good, the next place to look for problems is the collector. Temperatures inside the collector should reach 170 degrees Fahrenheit for the refrigerator to operate efficiently. Check the collector to make sure air cannot flow through and under the plastic film. Are all the refrigerator tubes painted black? Air flowing across the tubes and a poorly painted surface can decrease temperatures reached in the collector.

The third area to check is the condenser. If it is too hot to touch during the day it may need some cooling. Spray water on it during the day to help cool it off. If this helps then wrap the condenser sections of the refrigerator tube with cloth and drip water on it.

Terms

L_{CB} - Interior length of the cool box in feet.

L_{COLL} - Length of the collector in feet.

L_{COND} - Length of the condenser in feet.

W - Interior width of the cool box in feet.

H - Interior height of the cool box in feet.

Cool Box - The insulated box which holds the material to be kept cool.

Zeolite - A crystalline aluminosilicate which adsorbs water.

V - Interior volume of the cool box in cubic feet.

X - Pounds of material to be cooled each day.

Y - Days the cooled material needs to be stored.

Q_L - Initial cooling demand in Btu's per day.

Q_A - Cooling demand from the atmosphere in Btu's per day.

Q_T - Total cooling demand in Btu's per day.

T_{AMB} - Ambient temperature in degrees Farenheit.

T_{CB} - Cool box temperature in degrees Farenheit.

R - Insulation factor from Table 1.

t - Thickness of cool box insulation in inches.

A - Outer area of the cool box in square feet.

e - Efficiency of the refrigeration tubes = 0.052

I - Daily solar insolation in Btu's per square foot per day.