PN-ABA-873

STUDY OF THE OIL SEED SECTOR IN ZAMBIA FOR THE UNITED STATES AGENCY FOR INTERNATIONAL DEVELOPMENT

MAIN REPORT

APRIL 1987

TABLE OF CONTENTS

			Page
SECTION I	-	INTRODUCTION	1
		Terms of Reference Work Undertaken Structure of the Report	
SECTION II	-	SUMMARY OF FINDINGS	3
		Review of the Oil Seeds Sector Review of the Oil Seeds Processing Industry - Oil Production System Review of the Oil Seed Processing Industry - The Small Scale Oil Expellers Review of the Oil Seed Processing Industry Forecast Evaluation of Development Potential	
SECTION III	-	REVIEW OF THE OIL SEED SECTOR	7
		Introduction Production of Oil Seed Crops Supply of Inputs for Oil Seed Crops Marketing of Oil Seed Crops	
SECTION IV	-	REVIEW OF THE OIL SEED PROCESSING INDUSTRY - OIL PRODUCTION SYSTEM	15
		Introduction Lusaka Plant Ndola Plant Processing Capacity and Actual Utilisation Constraints to Full Utilisation of Processing Capacity Eastern Co-operative Union, Katete BRR Industries - Kabwe Zambia Agricultural Trading Company - Choma Southern African Oil Mills - Lusaka ZAMOIL - Luanshya Robinhood Products - Lusaka Sameer Oil Products - Lusaka	
SECTION V	-	REVIEW OF THE OIL SEEDS SECTOR IMPACT AND CONSTRAINTS	26
		Introduction Oil Seed Producers Refined Oil Consumers Importers and Exporters GRZ Policies to Overcome Constraints ROP Plans to Improve Performance Reconciliation of Data	

SECTION VI - REVIEW OF THE OIL SEEDS PROCESSING INDUSTRY - THE SMALL SCALE PROCESSORS 36

Introduction
Inventory of Small Scale Expellers
Marketing Channels
Current and Proposed Support for the Oil Sector
Government Policy

SECTION VII - THE OIL SEED PROCESSING INDUSTRY - FORECAST 43

Introduction
Projected Processing Capacity
Potential Domestic Oil Seed Production
Domestic Crushing and Refining Capacity
Projected Oil and Seed Cake Production
Demand for Edible Oil and By-Products
Impact of Imports

SECTION VIII - EVALUATION OF DEVELOPMENT POTENTIAL 54

Introduction
Major Constraints
Financial Supprt to the Small Scale Sub Sector

APPENDIX I - ROP Budgeted Costs and Activity Bar Chart for Lusaka

APPENDIX II - National Oil Seed Processing Capacity 1983 - 1990

APPENDIX III - Inventory of Small Scale Expellers Operational in Zambia

APPENDIX IV - Financial Analysis of Small Scale Expellers

APPENDIX V - Selected Bibliography

APPENDIX VI - List of People Interviewed

LIST OF ABBREVIATIONS

ADB	African Development Bank
AFE	Agricultural Farm Equipment Limited
CFB	Commercial Farmers Bureau
Co-ops	Primary Co-operative Societies
CSO	Central Statistical Office
ECU	Eastern Province Co-operative Union
DBZ	Development Bank of Zambia
ECA	Economic Commission for Africa
FAO	Food and Agricultural Organisation of the United Nations
GTZ	German Technical Assistance to Zambia
GRZ	Government of the Republic of Zambia
IRDP	Integrated Rural Development Programme
KIT	Royal Institute of Technology
LINTCO	Lint Company of Zambia
LSC	Large Scale Commercial Farmers
MAWD	Ministry of Agriculture and Water Development
MPCS	Multi-Purpose Co-operative Society
mt	Metric tonnes
NAMBCARD	National Agricultural Marketing Board
NCDP	National Commission for Development and Planning
ODA	Overseas Development Authority
PCU	Provincial Co-operative Marketing Union
ROP	Refined Oil Products (1975) Limited
SIDA	Swedish International Development Agency
SIDO	Small Industries Development Organisation
SPCMU	Southern Province Co-operative Marketing Union
SSEP	Small Scale Enterprise Promotions

SSPD	Statistics Section, Planning Division of the Ministry of Agriculture and Water Development,
UNDP	United Nations Development Programme
USAID	United States Agency for Internatioinal Development
ZATCO	Zambia Agricultural Trading Company Limited
ZAMSEED	Zambia Seed Company
ZCF	Zambia Co-operative Federatiion
ZCFFC	Zambia Co-operative Federation Finance Services

SECTION 1 - INTRODUCTION

OIL SEED SECTOR STUDY

SECTION I

INTRODUCTION

1.0 TERMS OF REFERENCE

This study was commissioned by the United States Agency for International Development. The terms of reference of the study are as follows:

(a) To establish a comprehensive data base on the production, marketing and processing of oil seeds, and the marketing and pricing of and demand for refined oil and by-products.

(b) To identify:

(i) constraints to full utilisation of locally produced oil seeds.

(ii) problems faced by producers of oil seeds and consumers of refined oil and by-products.

(c) To inventory and assess the small scale and artisanal oil seeds processing and expelling sub-sector in Zambia.

(d) To evaluate the possibility of expanding the small scale sub-sector and recommend methods of providing support to develop the sub-sector.

1.1 WORK UNDERTAKEN

The work we have undertaken can be summarised as follows:

(i) reviewed all available information and drew up a comprehensive data base;

(ii) reviewed and analysed all the secondary data available on the oil seed sector;

(iii) prepared a comprehensive interviews and visit schedule for collection of the required information on the oil seed sector;

(iv) carried out intensive field investigations and interviews to identify the various constraints encountered by the oil seed sector;

(v) analysed GRZ policy with regards to production, marketing, processing, imports and exports;

(vi) examined a limited number of local manufacturers with potential to meet the increased demand for the small-scale processors sub-sector;

(vii) prepared a report detailing our findings and recommendations.

In order to reduce the amount of detail in the main body of the report, we have made extensive use of appendices. The data base for the study is presented separately.

1.3 STRUCTURE OF THE REPORT

The report is structured as follows:

Section 2 - Summary of Findings.

Section 3 - A review of the oil seed sector, including farming categories.

Section 4 - A detailed review of the oil seed processing industry, including the production process, processing equipment capacity and utilisation rate and constraints to full utilisation.

Section 5 - Evaluation of the impact of and constraints on the existing production environment with emphasis on the marketing and processing system of oil seed producers, consumers, refined oil consumers and by-product consumers.

Section 6 - An indepth review of the small-scale and artisanal oil seed processors and expellers.

Section 7 - Assessment of the future potential development of the oil seed processing industry through projections of domestic processing capacity, potential oil seed production, crushing and refining capacity, edible oil and seed cake production and demand for oil and by-products.

Section 8 - Evaluation of the future development potential of the small-scale and artisanal oil seed expellers with recommendations to improve the sub-sector by using local and foreign monetary resources.

SECTION 2 - SUMMARY OF FINDINGS

SECTION 2

SUMMARY OF FINDINGS

2.0 INTRODUCTION

This section briefly outlines our major findings. For ease of reference, we list our findings separately for each section covered in the report.

2.1 REVIEW OF THE OIL SEED SECTOR

(a) There are five major sources of domestic edible oil in Zambia: Sunflower, soyabeans, cotton seed, groundnuts and maize. Maize germ requires a very complex extraction process and high capital investment and is thus not considered viable. All oil seeds with the exception of soyabeans are generally cultivated by small-scale traditional farmers. Sunflower is the most popular oil seed followed by cotton seed and soyabeans, which is a relatively new crop and is being taken up enthusiastically. Groundnuts are grown in small quantities in relation to demand for direct consumption and food processors as they are mostly used for confectionary purposes.

(b) The supply channels for inputs of oil seeds depend on the type of input and category of user. The Provincial Co-opperative Unions, (PCU), NAMBOARD, Zamseed and LINTCO and a few private traders are the main organisations responsible for distribuiton of improved seed, fertiliser, agricultural chemicals and machinery.

2.2 REVIEW OF THE OIL SEED PROCESSING INDUSTRY - OIL PRODUCTION SYSTEM

(a) The oil seed processing industry in Zambia is dominated by Refined Oil Products Zambia Limited (ROP). Recently, several medium-scale (50 mt/day) processing plants have been established by private traders. There are also about 40 small scale expellers located throughout Zambia.

(b) ROP Lusaka and Ndola account for almost 70% of Zambia's total installed crushing capacity, but on average utilise only 30% of this capacity.

(c) The major constraints to full utilisation of capacity are lack of skilled management, lack of readily available foreign exchange, lack of skilled personnel, irregular availability of spare parts and a poor working environment.

(d) The private medium scale processors operate at 60%, of their planned capacity with the exception of ZAMOIL and Robinhood which operate at 50% of their planned capacity. Their main

10

constraints are poor management, insufficient infrastructure for seed storage and lack of funds for future expansion especially auxillary equipment.

(e) ROP's total crude oil output has risen from 2,159 mt in 1980 to 10,630 in 1985.

(f) The total refined oil sold by ROP rose from 9,764 mt in 1980 to 15,390 in 1984.

(g) The medium and small-scale expellers which were not even in operation in 1980, are expected to produce and market over 6,500 litres of crude filtered oil in 1986.

2.3 REVIEW OF THE OIL SEED SECTOR - IMPACT AND CONSTRAINTS

(a) Oil seed producers operate within a framework of limited capital input, an inadequate extension network and inefficient marketing channels. In addition to this the low producer prices have been a disincentive to increased output.

(b) The oil seed processors suffer from ungraded, poor quality seed which causes excessive wear on the machines. The present combination of machines at ROP are not in line with the marketed output of oilseeds. For example, the sunflower processing capacity is far in excess of production and cotton seed too low in relation to its availability for crushing.

(c) The Government and indeed ROP are aware of these bottlenecks in the oil seed sector. They have taken several policy decisions to overcome these problems.

(d) Zambia appears to have sufficient processing capacity in view of the total oil seed production. An improvement in the operations of the existing plants to 60% utilisation of planned capacity will absorb all the increased oil seed production over the period 1986 to 1990.

2.4 REVIEW OF THE OIL SEED PROCESSING INDUSTRY

THE SMALL SCALE PROCESSORS

(a) During the survey 40 small-scale oil seed expellers were identified with capacities ranging from 20 kg to 180 kg per hour.

(b) The small-scale oil extraction industry does not have a formalised marketing system. In most cases processor owners either grow their own sunflower or buy directly from farmers in the region.

(c) There is no problem with the disposal of oil or seed cake in the rural areas and consumers do not have a preference for refined oil as against the crude filtered oil produced by the small-scale presses. The emphasis is on availability of oil.

(d) SIDO, DBZ, ODA and ZCF are some of the organisations involved in the promotion of the small scale expeller industry. These organisations provide advisory services to the small scale entrepreneurs.

2.5 REVIEW OF THE OIL SEED PROCESSING INDUSTRY - FORECAST

(a) On the basis of current production trends, oil seeds output is projected to increase from 85,100 mt in 1986 to 115,950 mt in 1990. Of this total, sunflower is projected to increase from 36,500 mt to 48,500 mt, soyabeans from 12,300 mt to 18,100 mt, fuzzy cotton seed from 22,350 mt to 30,250 mt and groundnuts from 14,000 mt to 19,100 mt.

(b) The available crushing capacity for sunflower is in excess of projected domestic production, 112,648 mt for an estimated output of 36,500 mt in 1986. Soyabean crushing capacity is 20,700 mt for an estimated output of 12,300 mt and cotton seed crushing capacity is 24,000 mt for an estimated output 22,300 mt. Thus although the total crushing capacity exists, it is not in balance with the quantity of oil seeds available for crushing. The sunflower output could be increased by almost 100% to utilise all the existing planned capacity.

(c) At present Zambia produces enough oil seeds to extract 14,555 mt of edible oil and this is projected to increase to 18,213 mt in 1990, based on the current oil seed production trend and available crushing capacity.

(d) We project the demand for edible oil will increase from around 28,127 mt in 1986 to 33,428 mt in 1990.

(e) We project that by-products production will increase from 43,727 mt in 1986 to 55,663 mt in 1990.

(f) The shortfall between domestic production and National demand for edible oil increases from 13,500 mt in 1986 to 15,000 mt in 1990. According to the CFB and Mount Makulu a large portion of this could be met locally in the next few years if the oil seed sector was organised effectively at the commercial level and sunflower production was promoted by the Government and donor agencies in the rural areas.

(g) The impact of crude oil imports on domestic production and marketing of oil seeds are:-

(i) the loss of by-products;

-12-

(h) Given the projected level of edible oil production in Zambia, the deficit in edible oils will have to be met utilising imported crude oil.

2.6 EVALUATION OF DEVELOPMENT POTENTIAL

(a) Currently there are no specific and clear policies for the promotion of small scale processing ventures. Apart from a few advisory organisations, there is no special institutional support to this sub-sector.

(b) The current high interest charges make the profitability of both the imported and local machines marginal. The attractiveness of the imported machine is very sensitive to the exchange rate. The locally manufactured machine is financially preferable, but again profitability is very sensitive to price and cost increases.

(c) There are many areas in Zambia which can produce sufficient oil seeds to justify the operations of small scale expellers.

(d) The major constraints to the development of this sub-sector include:-

(i) lack of organisational and institutional support;

(ii) lack of research and co-ordination of sectoral development;

(iii) limited access to credit;

(iv) insufficient oilseeds for processing;

(v) poor back-up services for provision of spare parts and maintenance.

(e) Local and foreign funds could be used for research into suitable makes of small-scale expellers and co-ordination of the development of this sub-sector. A revolving fund could be established to overcome the credit constraint and promotional campaigns could be mounted to encourage production of oilseeds in the rural areas.

SECTION 3 - REVIEW OF THE OIL SEED SECTOR

SECTION 3

REVIEW OF THE OIL SEED SECTOR

3.0 INTRODUCTION

There are five major sources of domestic edible oils in Zambia. These are sunflowers, soyabeans, cotton seeds, groundnuts and maize. Maize germ, although being used by a private firm in Kitwe, is not considered commercially viable because of the high capital investment required and the complex extraction process involved. It has therefore been excluded from further study in this report.

Before dealing with the four remaining oil seed crops in detail, definitions of farming categories and farming methods are discussed briefly.

3.0.1 Categories of farmers

For planning purposes, the Ministry of Agriculture and Water Development has identified four main categories of farmers, based on farm size and commercial orientation. These are:

(a) Traditional Subsistence Farmers: These farmers are only involved minimally in marketing and the only produce sold is to meet basic cash needs. The area cropped per farm is less than 3ha. Cultivation is done by hoe and no modern farm inputs are used.

(b) Emergent Farmers: These are more involved in marketing. A small area is devoted to cash crops (mainly hybrid maize, sunflower and cotton). The area cropped ranges between 3-10 ha. Cultivation is done by family labour with additional hired labour at peak periods. Oxen (hired or owned) are used for land preparation. Some modern farm inputs such as fertiliser and purchased seed are used.

(c) Small Scale Commercial Farmers: The cropped area ranges between 10-40 ha (average 25 ha). Hired labour is used and land preparation is mainly carried out by hired tractor and complemented by ox-drawn implements. Farmers use some modern farm inputs such as improved seed, fertilisers and insecticides. Additional casual labour may have to be hired for weeding and harvesting.

(d) Large Scale Commercial Farmers: The cropped area is over 40 ha. Cropping is highly mechanised with significant levels of farm inputs and a relatively large labour force. Some irrigation is used.

This set of categories is used widely for collection of statistical data by the Ministry of Agriculture and Water Development.

The distribution of the four farm categories in Central, Eastern, and Southern Provinces, which are the main oilseed growing areas, is shown in table 3.1.

These four farm categories can be further defined if the technological and agronomic development of farms is taken into consideration. There is a degree of correpondence between the two sets of definitions since farming technique is a reflection of commercial orientation.

These defined categories, which we use in this report, combine Ministry of Agriculture definitions with the technological agronomic development levels of farms. These definitions are:

(a) Small-Scale Traditional: These are farmers using unimproved production methods, not necessarily subsistence farmers, as a subsistence farmer has no reason to produce an oil seed crop, except possibly confectionary groundnuts.

(b) Small-Scale Emergent: These are characterised by a low quality of inputs in terms of fertiliser and management skills. They use hand cultivation. They have the skills but lack access to inputs.

(c) Small-Scale Commercial: They utilise hand and ox cultivation. They use improved techniques and inputs and have free access to draught animal power and they occasionally utilise tractor power.

(d) Large Scale Commercial: These are highly mechanised and use modern farming techniques and inputs.

3.0.2 Farming methods

All oil seed crops are grown during the rainy season which begins in late October and ends in early April. Most farmers in the small scale sector plant, weed and harvest manually. The majority of emergent farmers do not have equipment to use with draught power. Large scale commercial farmers often use combine harvesters and some hire them to other farmers. Oil seed crops are seldom stored or retained at the farm level unless the farmer wants to utilise them for his cattle at a later date. Moisture content in sunflower and soyabeans is a limiting factor to the keeping quality of oil seed as it should not exceed 6 and 8 per cent respectively in long term storage. Higher moisture content affects the oil content and quality.

16

3.1 PRODUCTION OF OIL SEED CROPS

3.1.1 Sunflower

Sunflower is grown principally by traditional smallholders and, to a small extent, by emergent and commercial farmers. Smallholders in the Southern Province produce 32% of the total national crop and Eastern Province small holders contribute 24%, while Central and Lusaka Provinces grow a further 27%. The area of sunflower planted in 1985 is estimated by MAWD to be 64,000 hectares. However, the average national yield is generally low in comparison to outputs achieved by experimental plots in Zambia.

According to Val Eylands, Zamore Sunflower Agronomist, sunflower is currently the most popular oil seed crop in Zambia and appears to be the best suited for cultivation in the country. The reasons for this are:

(a) it is suitable for late planting and thus avoids labour constraints during maize planting;

(b) it is a low input crop with relatively good yields in comparison to other crops, even with very little management;

(c) it has a higher oil content than other oil crops;

(d) the extraction process is easier than for other oil seed crops, especially for village scale oil extraction plants.

Sunflower production in Zambia increased rapidly from 1980 to 1985, and declined sharply in 1986. This is thought to be due to good rainfalls during this season when farmers went back to growing maize. From 1982 to 1985 Zambia experienced low rainfall all over the country and farmers planted sunflower in preference to maize as it is less suseptible to drought.

As most sunflower is marketed through official channels, total production figures for the country are fairly accurate. However, average yields and hectarage figures do not appear to correlate with other information. In this report the Ministry of Agriculture crop intake returns are used, because these are considered most appropriate for this particular exercise and also because this data is used for all planning purposes by the Government of Zambia.

3.1.2 Soyabeans

Soyabean production was mostly confined to large scale commercial farmers until 1980 when an extension programme was designed to assist the small-scale farmers. Soyabean production in the country increased from 1,295 mt in 1979 to 14,700 mt in 1985 (GRZ statistics). According to an FAO expert this is only officially

Table 3.1

Distribution of Farms by type in Eastern, Southern and Central Province

Farm Type	Central	Eastern	Southern	Total
Traditional	18,900	84,500	7,750	111,150
Emergent	22,000	28,200	57,500	101,700
Commercial Small Scale	7,800	3,280	8,220	19,300
Large Scale	300	20	330	650
Total	49,000	116,000	67,800	232,800

Source: Agriculture Data for Planning, NCDP and the University of Zambia, (July 1983).

recorded production and the actual production is considered to be much higher, at somewhere in the region of 27,000 metric tonnes in 1985.

Soyabean has been introduced to small scale farmers through the development of varieties which do not require seed inoculation. The number of small scale farmers growing soyabean increased from almost nil in 1980 to over 5,000 in 1985 (LINTCO Reports). In 1983, LINTCO was given the responsibility for soyabean expansion amongst small scale farmers and it has achieved a significant increase in production by the small scale sector. Central, Eastern and Southern Provinces grow about 50 per cent of the National output. Lusaka and Copperbelt Provinces contribute the other 50 per cent.

Although the overall production of soyabeans increased there appears to be a sharp decrease in the large scale commercial farmers' production in 1986 according to FAO estimates. Neither the Commercial Farmers Bureau nor FAO could indicate any reasons for this decline.

3.1.3 Cotton

Cotton growing is effectively confined to the Southern, Central and Eastern Provinces, where it grows well on the plateau areas and in the Gwembe and Luangwa valleys. Seed cotton is primarily produced as a fibre for the textile industry and cotton seed is a by-product.

In 1980, the annual production of cotton was 24,000 mt., which declined to 17,000 mt in 1981 and further to 13,000 mt in 1982. From this low point it has increased to 52,000 mt by 1985 (LINTCO Annual Report 1984/85). Approximately 60% (by weight) of the seed cotton is fuzzy cotton seed, 35% lint, and 5% trash.

The crop is produced mainly by small scale farmers and by a few commercial farmers. According to LINTCO, smallholders produced 98 per cent of the National production in 1982. In 1985, LINTCO bought seed cotton from 38,500 growers, mostly smallholders. The reason for the dominance of the small scale farmer in cotton production is that it requires high labour input which makes the crop unattractive to commercial farmers. The size of the farms varies greatly from 0.25 ha to 150 ha, for the largest commercial growers. Cotton growers in Southern, Eastern and Central Provinces typically grow 1 ha, emergent farmers in Kabwe plant up to 2.5 ha, emergent farmers in Mazabuka and Gwembe plant 10 ha and a few commercial growers plant over 50 ha.

LINTCO's annual reports, and FAO/GRZ data do not correlate as seen in table 3.2 below. FAO could not give any reasons for this big drop in production.

19

Table 3.2

Fuzzy Cotton Production Data From LINTCO and FAO/GRZ

	1980	1981	1982	1983	1984	1985	1986
LINTCO	14,583	10,296	8,425	19,668	26,989	31,731	48,040
FAO/GRZ	13,745	10,306	7,685	18,567	26,344	18,152	19,407

Source : LINTCO Annual Reports 1980 - 1986
Agricultural Statistics Bulletin, MAWD, 1980 - 1983
FAO/GRZ Final Crop Forecasts 1984 - 1986

3.1.4 Groundnuts

Two main varieties of groundnuts are grown in Zambia, these are:

(a) Chalimbana (confectionary type), and

(b) Makulu Red (oil seed type).

Production of the Chalimbana variety is concentrated in the Eastern Province, which produces over 90 per cent of the national output. Production outside Eastern Province is on very small plots cultivated by women for subsistence purposes. Makulu Red is preferred for oil extraction because of its shape and size, but it does not grow well in high rain areas. Imported seeds or fertiliser are seldom used due to lack of financial resources. Availability of family and hired labour, especially for shelling, is a major constraint to increased production because groundnuts are always grown as a garden crop with less priority than other crops. Traditionally, only women grow groundnuts to supplement their kitchen requirements and sell any surplus for cash.

Although groundnuts have a high oil content, they are produced in small quantities in relation to their demand for confectionary purposes. They are seldom available for oil extraction and the high demand makes their price uneconomical for oil processing.

Production of officially marketed groundnuts has declined from over 14,500 mt in 1966 to 1,041mt in 1983 and 2,419 mt in 1985. Some of this shortfall is due to diversion of produce by farmers to unofficial marketing channels where the price is 30 to 40 per cent higher than the Government price. One estimate puts the size of the unofficial market at 8,000 to 10,000 mt in 1985.

3.2 SUPPLY OF INPUTS FOR OIL SEED CROPS

The main inputs for oil seeds are:

(a) improved seed;

(b) fertiliser;

(c) agricultural chemicals and;

(d) machinery.

Supply channels for these inputs depend on the type of inputs and occassionally on the category of the user.

3.2.1 Improved Seed

Improved seed is produced on a contract basis by members of the Zambia Seed Growers Association (ZSGA), under the supervision of the Zambia Seed Company. The only exception is cotton seed which is controlled by LINTCO. Zambia Seed Company (Zamseed) is responsible for all other seed procurement and sale to Provincial

Co-operative Unions (PCU).

3.2.2. Fertiliser

Nitrogen Chemicals of Zambia (NCZ) in Kafue produces and supplies about 60 per cent of the total National requirement, with the remainder met by imports. The National Agricultural Marketing Board (NAMBOARD) had the statutory monopoly on the import of fertiliser until April 1986. Now PCU's and the private sector are free to participate in fertiliser importation and distribution. In practice, however, NAMBOARD is still primarily responsible for procurement and distribution. NAMBOARD procures fertiliser by international tender through the National Supply and Tender Board.

According to NAMBOARD, the PCU's have no funds this year to buy the fertiliser from NAMBOARD and are therefore not involved in its distribution. In the past PCU's bought the fertiliser from NAMBOARD for distribution to the various production centres through their rural depots.

3.2.3 Agricultural Chemicals

Pesticides, herbicides, fungicides and disinfectants are all imported and sold by private enterprises, usually branches or agents of larger multi-national companies. NAMBOARD also imports some agro-chemicals for general use, while LINTCO imports chemicals only for application by small scale cotton and soyabean farmers.

3.2.4 Agricultural Machinery and Equipment

Both private sector and parastatal firms import and sell agro equipment to the commercial farming sector. In the recent past, there has been a general shortage of farm equipment, in particular spare parts, because of the difficulty in obtaining foreign exchange.

The foreign exchange auctioning system introduced in Zambia in 1985 has somewhat eased these problems, but the high cost of equipment in local currency caused by the auctioning system aggravates the supply situation. Ox drawn equipment, spares and hand tools are imported by NAMBOARD and distributed by the PCU's. There is currently one local manufacturing firm producing ox-drawn ploughs with support from the World Bank.

3.2.5 Distribution of Inputs

The Provincial Co-operative Unions (PCU) are responsible for the distribution and sale of all agro-inputs to farmers. The PCU's are expected to reach the rural farming community through primary co-operative societies. However, these are not well organised and managed and do not operate efficiently. Distribution is consequently achieved through a network of rural depots, run directly by the PCU's. Inputs for cotton and small scale

22

soyabean production are supplied by LINTCO.

3.2.6 Extension Services

For sunflower and groundnuts, extension advice is provided by staff from the Department of Agriculture. For cotton and small scale soyabeans, a similar service is provided by LINTCO, which has 229 staff on secondment from the Department of Agriculture. There is one extension agronomist to help both staff and farmers.

3.3 MARKETING OF OIL SEED CROPS

Marketing of agricultural produce in Zambia is dominated by parastatals and Provincial Co-operative Marketing Unions (PCMU's). The National Agricultutral Marketing Board (NAMBOARD), the Zambia Seed Company (ZAMSEED), the Lint Company of Zambia (LINTCO) and the PCMU's share responsibility for agricultural produce marketing for all categories of farmers.

3.3.1 Sunflowers

In theory, all purchases of sunflower at farm level should be carried out by primary co-operative societies. In practice, with the exception of Eastern Province Co-operative Union, primary societies lack the organisation and equipment to carry out this function. Therefore, all sunflower purchases are made by PCMU's directly. There are a large number of buying depots at provincial, district and village level in addition to mobile depots for the remote areas.

Sunflower bought from farmers by PCMU's is sold directly to NAMBOARD for ultimate delivery to processors. NAMBOARD is used more as a residual buyer. Processors buy directly from farmers and PCMU's as well as from Namboard.

3.3.2. Soyabeans

The marketing channels used in soyabeans are similar to those of sunflower. The Co-operative Unions are the main buyers at provincial level and NAMBOARD is, responsible for inter provincial marketing and act as buyers of the last resort.

The Provincial Co-operative Unions either sell the soyabeans directly to processors or to NAMBOARD for resale to processors. Occasionally farmers sell their soyabeans directly.

In addition to the above organisations, in 1983, LINTCO was given the responsibility of marketing soyabeans for small - scale farmers. LINTCO supplies inputs and extension facilities to small - scale farmers on a seasonal credit basis. The loan is then recovered from sales of the soyabeans which is handled by LINTCO depots.

3.3.3 Cotton Seed

LINTCO provides packing material for seed cotton through their input depots and farmers are responsible for transporting the seed cotton to the nearest LINTCO depot. LINTCO gins the seed cotton and sells the cotton seed, which is a by-product, to oil seed processors or to farmers for stockfeed.

3.3.4 Groundnuts

Marketing of groundnuts is largely free from control. This means that farmers can sell their produce to the highest bidder and the PCU's are buyers of the last resort. The only exception is Eastern Province where ECU has the monopoly for buying groundnuts. Eastern Province produces 90% of the total marketed output. The Eastern Co-operative Union estimate that they handle less than 20% of the total marketed output and 80% is sold through unofficial marketing channels. Farmers receive higher prices and quick cash at their "door steps" from private traders. They have to pack the groundnuts in sacks to market through Eastern Co-operative Union, but private traders buy from buckets or drums packed by farmers.

SECTION 4 - REVIEW OF THE OIL SEED PROCESSING INDUSTRY - OIL PRODUCTION SYSTEM

SECTION 4

REVIEW OF THE OIL SEED PROCESSING INDUSTRY - OIL PRODUCTION SYSTEM

4.0 INTRODUCTION

The oil seed processing industry in Zambia, which is dominated by the parastatal company Refined Oil Products (1975) Limited (ROP), can be divided into three categories,

Large Scale: - ROP Lusaka and Ndola Plants.

Medium Scale
- Eastern Co-operative Union, Katete;
- BRR Industries Limited, Kabwe;
- Zambia Agricultural Trading Corporation (ZATCO), Choma;
- Southern African Oil Mills, Lusaka.
- Zamoil Limited, Luanshya;
- Robinhood Products, Lusaka;
- Sameer Industries, Lusaka;

Small Scale Processors.

ROP has processing facilities in Lusaka and Ndola. The two plants account for almost 70% of Zambia's rated crushing capacity for seed (107,760 out of 161,548 mt). Until recently ROP was the sole domestic producer of vegetable oils.

ROP can crush cotton seed and soyabeans in Ndola and sunflower and soyabeans in Lusaka. Lusaka has also facilities for solvent extraction of oil from soyabeans and oil seed cake. Much of the processing machinery is old and, with spares difficult to obtain or unavailable, operational capacity is considerably less than the rated capacity.

We now detail oil processing operations for each processing plant in two of the three categorires listed above, separating ROP Lusaka and Ndola plants. The small scale oil seed processors will be discussed in a separate section later. For each of these oil extraction plants, we review:

(a) the production process, equipment and capacity;

(b) processing capacity and actual utilisation;

(c) constraints to full utilisation of existing capacity.

26

Before reviewing the processing operations of the oil industry some common definitions of capacities are outlined below:

(a) Installed Capacity

This refers to a maximum output obtainable if a plant operates at maximum speed on a 24 hour/52 week basis and suffers no breakdowns. For example, Lusaka plant has an installed capacity of 4 x 80 = 320 mt per day x 365 days = 116,800 mt per year

(b) Rated or Planned Capacity

This is defined as a percentage of installed capacity for a certain number of days a year, taking breakdowns and scheduled maintenance into consideration. At ROP Lusaka, for instance, rated capacity is 85% of installed capacity based on 280 days per year.

$$\frac{85 \times (320 \text{ mt} \times 280 \text{ days})}{100} = 76{,}160 \text{ mt}$$

(c) Operational Capacity

This is the actual capacity utilised by the processor. The rated capacity and actual utilised capacities are different for each processor depending upon their work schedules and number of operating days per year. ROP Ndola has a rated capacity of 240 days x 40 mt per day of soyabeans i.e. 9,600 mt per year, but their actual operational capacity is about 3,000 mt per year. BRR on the other hand have a planned or rated capacity of 300 x 40 mt per year but have achieved higher utilisation levels due to efficient maintenance schedules.

4.1 LUSAKA PLANT

4.1.1 Production Process

The seed arrives in bags on lorries from the marketing depot and is dumped manually into a hopper and conveyed pneumatically to storage silos.

The seed is conveyed from the silos to day-bins and from there through cleaning, dehulling, flaking, cooking and conditioning to the expellers.

The expeller yields crude oil and a cake high in oil content. This cake is taken to the solvent extractor for further processing and the crude oil is sent to the filter press.

27

The cake from the solvent extractor is bagged for sale.

The oil from the expeller/filter press is mixed with the solvent extracted oil and stored in crude oil tanks for subsequent refining.
Finally, the crude oil is alkali-refined, bleached, deodorised and packed for sale.

Soyabeans can also be processed instead of sunflower seeds. They are cleaned, cracked, cooked, conditioned and flaked prior to entering the solvent extraction plant. Some of the hulls may be removed at the cracking stage, depending on the protein level of the meal.

4.1.2 Processing Equipment and Capacity

The processing equipment consists of four KRUPP's - 2 barrel expellers. Each is rated at 30 mt per day of sunflower seed when used for "pre-pressing" to 15% oil in the cake, or 40 mt per day when "full pressing" to 7% oil in the cake. The planned operation is to use 3 expellers simultaneously and keep the fourth as standby, to be operated during breakdowns and overhauls. There are 12 seed storage silos. Equipment for cleaning, dehulling, flaking, cooking and conditioning of sunflower seed is from BUHLER of Switzerland.

The BERNARDINI solvent extraction plant has a rated capacity of 200 mt per day of pre-pressed sunflower cake or soyabeans for direct extraction.

There is also a CARVER expeller with an installed capacity of 100 mt per day. This machine has not been operational for the past few years due to lack of parts.

The oil refining plant consists of a 120 mt per day WESTFALIA continuous alkali refining system and a KRUPP continuous bleacher deodoriser. In addition there is a 40 mt per day batch refinery which is used for refining hardened fish oil, and for formulating margarine base oil. When fish oil is not available locally, hardened sunflower seed oil imported from South Africa is used, whenever foreign exchange is available.

There is also an old refinery which consists of a SHARPLES continuous refining plant with an installed capacity of 30 mt per day. Currently, this refinery is not being used. The old SHARPLES batch bleacher and deodoriser are in good working condition and are being used for margarine production.

The packaging plant consists of a RONCHI bottling line which has an installed capacity of 82 mt per day. It has adequate facilities for packing small and large plastic bottles as well as the 210 litre drums.

TABLE 4.1

ROP Processing Capacity and Utilisation Rate

		1980/81 mt	1981/82 mt	1982/83 mt	1983/84 mt	1984/85 mt	1985/86 mt
LUSAKA							
Planned (5) Crushing Capacity	Sunflower (1/2)	28,000	28,000	76,160	76,160	76,160	76,160
	Soyabeans (3)	nil	nil	9,600	9,600	9,600	9,600
Actual Oil Seed Crushed	Sunflower	7,044	8,672	25,870	23,410	21,707	30,817
	Soyabeans	-	-	2,639	3,035	2,010	3,924
Percentage Capacity Utilised	Sunflower	25	31	34	31	28	40
	Soyabeans	-	-	28	32	21	41
Actual Crude Oil Output	Sunflower	1,761	2,168	7,761	6,555	6,295	9,245
	Soyabeans	-	-	554	607	402	748
NDOLA							
Planned (4) Crushing Capacity	Cotton seed	6,000	6,000	6,000	6,000	12,000	12,000
	Soyabeans	4,800	4,800	4,800	4,800	9,600	9,600
Actual Oil seed Crushed	Cotton seed	1,510	761	nil	376	7,524	6,801
	Soyabeans	1,580	2,680	2,137	2,132	167	1,063
Percentage Capacity Utilised	Cotton seed	25	13	nil	7	63	57
	Soyabeans	33	56	45	44	02	11
Actual Crude Oil Output	Cotton seed	252	135	nil	27	745	764
	Soyabeans	192	346	248	240	16	90

General source: ROP Lusaka and Ndola Plant

1. 100 mt per day for 280 days, ROP Lusaka.

2. 4 x 80 mt per day for 280 days x 86% = 76,160, ROP Lusaka.

3. 40 mt per day for 240 days, 100% utilisation, ROP Lusaka and Ndola.

4. Although installed capacity is 80mt/day the maximum workable capacity is 20mt/day for 240 days - source IBRD STUDY 1985.

5. The Carver plant is not included as ROP do not think it can be recommissioned in the near future.

4.2 NDOLA PLANT

4.2.1 Prodution Process

The production process at the ROP Ndola plant is basically the same as the Lusaka plant, except that Ndola does not have a solvent extractor.

4.2.2 Processing Equipment and Capacity

The original plant consists of a HERCULES expeller installed in 1964 and 4 MAXOILS moved from Lusaka and installed in 1978. The combined rated capacity of the machines is 48 mt per day, but the maximum throughput is less than 12 mt per day due to the age of the machines. In 1983 new, non-interchangeable machines were installed to press cotton seed and soyabeans with daily rated capacities of 50mt and 16mt respectively. The plant was purchased from UMAS of India at the request of GRZ, to utilise a loan facility.

Although the principal equipment for delinting, dehulling, cooking, conditioning and expelling were delivered by UMAS, some ancillary equipment such as catwalks and aspirators were not supplied. This equipment has been requested and in the meantime the old catwalk and aspirators are being used, although these are not considered safe.

Only 2 of the 3 expellers have been installed. The third is still not functional because UMAS plant engineers could not install it effectively due to technical problems. Engineers from UMAS may come early next year to install the plant and make it operational, but it is still not certain if the expellers will work because ROP think there are design flaws in the parts.

The oil refinery is a batch refinery, which was installed by Lever Brothers more than 20 years ago, and is still functional. The refinery consists of 2 x 6 mt batch alkali refiners/bleachers and 2 x 7 mt deodorisers. The capacity is 56mt per day of which 8mt per day is used for cotton seed oil from the expellers. The remaining capacity is used with imported oil, when available.

4.3 PROCESSING CAPACITY AND ACTUAL UTILISATION

Table 4.1 shows ROP Lusaka and Ndola's planned processing capacity and actual operating performance as a percentage of installed capacity.

The utilisation level for both ROP Lusaka and ROP Ndola are very low, 30% on average. It must be noted at this stage that, although ROP Lusaka have the given annual crushing capacities for soyabeans and sunflower, the processing cannot be carried out concurrently as the table given assumes. The actual crushing programme for ROP is to crush sunflower for 6 - 7 months, stop,

Table 4.2

Total Oil Sold by ROP Ndola and Lusaka

	1980/81	1981/82	1982/83	1983/84	1984/85	1985/86 (3)
Refined Oil Sold (mt) (1)	9,764	11,883	16,663	19,504	15,390	n/a
Refined Oil (2) Produced Locally	2,159	2,596	8,392	7,280	7,308	10,630
Total Crude Oil Imported and Refined Locally	11,000	11,300	14,500	10,549	10,500	12,563

The figures do not balance due to carry over stocks which are not shown.

Source: 1. ROP Sales figures/USAID, Zambia, Report by V. Chella.

2. Refinery losses of up to 2%-2.5% occur on both local and imported crude oil. Losses also occur due to degumming and the poor state of the refinery at ROP.

3. Imports from January to September.

According to the World Bank Report of June 1984, "ROP presently supply on average about 18,000 mt of refined oil to the domestic market of which an estimated 12,000 mt is imported as crude".

service and convert the machines and then crush soyabean for the next 2 - 3 months. ROP Lusaka have ordered and partially paid for a separate desolventiser plant for soyabeans from Simon Rosedown (UK). It is planned that this machine will be in operation by 1988. This should change the situation dramatically as separate plants will then be available for each crop.

The Ndola plant has the same facility problem because soyabeans and cotton seed cannot be crushed simultaneously and the cotton seed crushing capacity is very low in comparison to the availability of seeds. They have plans to increase their cotton crushing capacity in the next few years but no definite plans are available to indicate when this would be completed.

Table 4.2 shows the refined oil produced and sold by ROP nationally and the total crude oil imported and refined by the company.

The locally refined oil represents less than half of the total sales. Presumably imported crude oil makes up the rest of the deficit.

4.4 CONSTRAINTS ON FULL UTILISATION OF PROCESSING CAPACITY

4.4.1 Operational Constraints

The major problem faced by ROP is to keep the plant operational on a continuous basis, due to the non-availability of spare parts for regular maintenance and emergency breakdowns. This is caused by a foreign exchange constraint on the purchase of spare parts and the lack of timely management decisions on maintenance and repairs. Many examples were cited by the plant engineers to illustrate this point. The Chief Engineer, for instance, has a planned maintenance programme and submits spares requirements needed to maintain the plant. The necessary spare parts are seldom forthcoming. Therefore the expeller worms, which should be replaced periodically, are usually rebuilt several times before new replacements are actually ordered. This results in lower oil yields and frequent breakages, which directly affects the productivity of the firm.

Similarly, the site engineers both in Lusaka and Ndola are aware of the poor condition of seed cleaners, but they have neither the authority nor the resources to rectify the situation. All such decisions are made by top management who, in the engineers' opinion, do not know enough about the machinery.

Lack of spare parts thus appears to be a major constraint for the sunflower processing plant. The sunflower seed is very abrasive and spares are critical for its crushing equipment.

Further, the Purchasing Department is based in Ndola and the Lusaka plant personnel considers that their requirements are often not attended to expeditiously. They consider that all orders are approved in Ndola and Lusaka does not get priority.

Although independent of the crushing facilities, the refinery is also unable to work at full capacity. The availability of locally crushed crude oil is not sufficient to keep it fully operational and the high cost of imported crude oil and the erratic availability of foreign exchange make it difficult to import all the crude oil requirements. Zambia receives some crude oil from the United States of America under the PL 480 programme. The imports are barely sufficient to keep the Ndola refinery operational and Lusaka usually receives very little of this crude oil.

4.4.2 Management Constraints

ROP have had to operate in a difficult environment and it is not an easy task to differentiate between the deficiencies caused by internal mismanagement or external factors.

Management has to wait for instructions from INDECO directors concerning policy decisions. For instance, the cotton seed press in Ndola was ordered without a feasibility evaluation by INDECO and ROP's involvement in the decision-making process was minimal as this project was funded through a bilateral loan agreeement. This has resulted in the procurement of a poorly designed machine with low crushing capacity, which is generally unsuitable for ROP cotton seed crushing requirements.

4.4.3 Organisational Constraints

The conditions of employment offered by ZIMCO to ROP personnel are not sufficiently lucrative to recruit high calibre Zambian engineers, many of whom seem to prefer "clean desk" jobs as opposed to factory work. Expatriate engineers on short-term contracts have to be relied upon and this causes discontinuity in operations and results in short term planning. The present engineers and works managers at Lusaka and Ndola have fully developed planned maintenance programs, but their implementation is hindered by the lack of forward planning in the ordering of spare parts. Apparently, spares are generally ordered only after serious breakdowns have occurred. This crisis management system is a considerable bottleneck to the processing of oil seeds.

4.4.4. Infrastructural Constraints

The Ndola factory's cotton seed plant suffers from a number of defects in design, layout, installation and location. This is mainly due to the use of an existing but unsuitable building at the time of installation in order to save costs. Design faults on the cotton seed plant include the absence of automatic feed control to the delinter and decorticator, which results in frequent blockages and machinery stoppages. Commissioning by suppliers' engineers was difficult and protracted and the highest daily throughput achieved to date is less than 70% of rated capacity.

34

Uncertain availability and the high cost of foreign exchange cause production stoppages through lack of processing chemicals, such as hexane for the solvent extraction plant in Lusaka, packaging materials and crude oil for refining in both Lusaka and Ndola. It is estimated that ROP needs at least US $150,000 foreign exchange per quarter to maintain operations.

4.4.5 Availability of Oil Seeds

Both ROP Lusaka and Ndola cite low supplies of oil seeds, especially sunflower, as a major constraint to the full utilisation of their crushing capacity. Table 4.3 illustrates the total oil seed marketed production (MAWD) and utilisation by ROP.

As can be seen from table 4.3, except for 1982 and 1985, ROP's sunflower utilisation was below marketed production. The situation may of course change if the 1985 utilisation pattern continues. It must also be noted that other plants such as Katete, Sameer, Robinhood and Southern African Oilmills, also use sunflower and the production constraints may become serious in the near future if output of sunflower does not increase significantly. However, it seems that availability of oil seed has not been a constraint to ROP's capacity utilisation in the past.

Soyabean utilisation is between 23% and 156%. The officially marketed output of soyabeans is considered to be far below the actual production (Javahri FAO). This is possibly due to large commercial farmers retaining considerable quantities of their production for their own livestock consumption and farmers selling privately to the manufacturing sector,for example meat processors, large poultry keepers and bakeries.

Marketed cotton seed production has been increasing steadily since LINTCO's involvement in 1979/80. There has been a lot of focus on this crop recently and some multinationals are investing in Mumbwa and Gwembe. Availability of cotton seed therefore may not be a major problem in the near future as ROP Ndola on average uses just over 25% of the total production.

4.5 EASTERN CO-OPERATIVE UNION-KATETE

4.5.1 Production Process

The ECU plant was commissioned in 1984 and began operations in 1985. They use sunflower seed for their extraction process. ECU's production process consists of seed cleaning and dehulling, air separation of hulls and meat flaking, cooking and conditioning and then expelling. ECU filter their crude oil twice and sell it without refining. The cake is bagged and sold to their stockfeed manufacturing division in Chipata.

Table 4.3

National Marketed Production and ROP's Utilisation of Oil Seeds

		1980	1981	1982	1983	1984	1985	1986
National (1) Marketed Output	SF	10,662	18,637	20,246	30,464	40,425	25,496	23,750
	SB	1,012	3,673	3,914	6,898	9,556	10,601	11,700
	CS	13,[illegible]45	10,005	7,666	18,737	26,345	18,152	19,407
Planned (2) Processing Capacity	SF	28,000	28,000	76,160	76,160	76,160	76,160	76,160
	SB	4,800	4,800	14,400	14,400	14,400	14,400	14,400
	CS	6,000	6,000	6,000	6,000	12,000	12,000	12,000
Actual Oil Seed (3) Utilised	SF	7,044	8,672	25,870	23,410	21,707	30,817	-
	SB	1,580	2,680	4,776	5,167	2,177	4,987	-
	CS	1,510	761	NIL	376	7,524	6,801	-
Percentage of Oil Seed utilised	SF	66	46	127	77	54	121	-
	SB	156	73	122	75	23	47	-
	CS	11	8	-	2	29	37	-

Source 1. MAWD, Agricultural Statistics Bulletin and FAO/GRZ Crop Forecast.

2. ROP Questionnaires

3. Actual utilisation is higher than the Natioinal marketed output due to carry over of stock by ROP from past seasons.

Key:

SF - Sunflower
SB - Soyabeans
CS - Cotton seed

4.5.2 Processing Equipment and Capacity

The plant has been purchased from KUMAR of Bombay, and consists of seed cleaner, dehuller, air seperator, cookers/conditioner and expeller and a filter press. There are four cooker/conditioner units and four single barrel expellers with an installed capacity of 50 mt per day. There are no refining facilities and oil is sold unrefined under ECU's brand name. Packaging is carried out manually in 210 litre drums and 5 litre and 2.5 litre plastic bottles.

4.5.3 Processing Capacity and Utilisation

ECU Katete have an installed capacity of (50 x 365) 18,250 mt per year, and a rated capacity of (40 x 140) 9,600 mt per year. Due to various constraints their actual crushing capacity has been less than 60% of rated or planned capacity.

4.5.4 Constraints on Full Utilisation of Capacity

ECU's present seed cleaning equipment is not adequate to remove the grit from the sunflower seed. This causes excessive wear to the expeller parts and results in frequent breakdowns.

Very few spare parts were bought with the machinery and, due to this, the plant is already facing critical operational problems. The factory manager admitted that the plant is only operating at a maximum of 50% capacity (25 mt/day). Breakdowns are frequent and local production of spares has not yet been explored.

The General Manager of ECU, based in Chipata, is responsible for major production decisions and this appears to cause delays in managerial reactions and affects productivity.

4.6 BRR INDUSTRIES LIMITED-KABWE

4.6.1 Production Process

BRR is a privately-owned company based in Kabwe, which started operations in 1985 and crushes cotton seed. A two phase delinting process is used to remove the fuzzy cotton from the seed. The seeds are then dehulled, flaked and cooked and conditioned prior to expelling. The oil from the expellers is filtered and then refined and bleached prior to being packed in plastic containers. The seed cake is sold in bags to stockfeed manufacturers and private farmers. The fuzzy cover of the cotton seed, called the linters, is sold to furniture manufacturers.

4.6.2 Processing Equipment and Capacity

The processing equipment consists of a 2-stage delinter and 3 dehullers from MURRAY-CARVER in the USA. The flaker, cooker and 3 stage conditioners are from ANDERSON of USA as is the two barrel expeller with installed capacity of 50 mt per day. The batch refinery is from BERNADINI of Italy and has a maximum installed capacity of 15 mt per day on a 24 hour shift.

BRR have a bottling plant which can pack up to 15 mt per day. The BRR equipment can be adjusted for sunflower and soyabeans. Early this year BRR was unable to obtain fuzzy cotton seed and used 1,500 mt of sunflower. This was, however, found to be uneconomical as the crude oil yield was low and the cake had a high oil content.

4.6.3 Processing Capacity and Utilisation

The planned production capacity is 40 mt per day of fuzzy cotton seed for 300 days per year. Fuzzy cotton seed contains about 25% oil, out of which about 15% is extracted as crude oil. The cake contains the remaining 10% of oil and 40% protein. There is thus an average yield of 6 mt of crude oil per 40 mt of seed.

BRR's actual utilisation has been equal to its rated capacity and in 1986 the management hopes to exceed their 300 day target and crush more than 12,000 mt. In 1987, they hope to achieve 14,000 mt. Oil is sold directly to consumers in 210 litre drums. If packing materials are available then it is also packed in 5 litre and 2.5 litre cans.

4.6.4 Constraints on Full Utilisation of Capacity

BRR have a new processing plant and thus have not encountered any problems with their machines. Their constraints are lack of infrastructure and managerial skills.

BRR have storage sheds which can hold up to 40 days' supply of bagged cotton seed. This is not sufficient to hold the buffer stocks required because of the unreliability of LINTCO's supplies. In January 1986, BRR could not obtain cotton seed for 3 months and had to use sunflower. They would like to have more storage sheds so as to prevent a repetition of the January 1986 situation.

BRR also expressed concern about the non-availability of Zambian engineers to run the factory. They have to rely on expatriate staff.

BRR commenced production in July 1985 and have bought two years' supply of spare parts. They have also contacted local manufacturers about the local production of expeller worms and shafts. They do not anticipate any major constraints on their processing capacity.

4.7 ZAMBIA AGRICULTURAL TRADING COMPANY (ZATCO)-CHOMA

ZATCO use sunflower and soyabeans for making stockfeed and the crude oil is just a by-product. ZATCO utilise the same processing system as ECU Katete. ZATCO established the stockfeed plant in 1982 with a KUMAR Plant from India. The installed capacity of this plant is 25 mt/day. There is no refining capacity and oil is sold in 210 litre drums to wholesalers in Choma and Zamoil in Luanshya.

The actual crushing capacity is between 25-30% of installed capacity, which is 2.5 mt of soyabeans and 5 mt of sunflower per day. The factory is only operational for a maximum of 240 days a year, due to frequent breakdowns and lack of appropriate spare parts. Most of the spare parts are manufactured locally. The machines were installed in 1982 and many parts have been improvised using locally available raw materials.

According to ZATCO management the machinery is badly installed and of a very poor design. The spare parts can be made locally but are of very poor quality and wear out quickly.

4.8 SOUTHERN AFRICAN OIL MILLS-LUSAKA

Southern African Oil Mills (SAOM) is based in Lusaka and crush sunflower seed. The production process involves cleaning, decorticating, cooking/conditioning, expelling, refining and packing.

The plant consists of a SUPER DUO ANDERSON expeller from the USA, with an installed capacity of 30 mt per day. The refininery is from BERNADINI of Italy and has an installed capacity of 5 mt per day.

SAOM have been in operation since October 1986 and are operating at 15% of installed capacity as the machines are not fully installed.

SAOM management feel that, given their short period of operation, it is too early to define any major constraints.

4.9 ZAMOIL-LUANSHYA

The ZAMOIL production process is very simple and consists of cleaning, decorticating and expelling. There is no cooking or conditioning. The crude oil is filtered and packed in drums and plastic containers for sale to consumers.

The Zamoil pressing plant has an installed capacity of 25 mt/day. The plant consists of a dehuller, 3 expellers and an oil press. The actual working capacity is about 5 mt of groundnuts per day and 4mt of sunflower, all yielding about 1,000 litres of crude oil. The oil is filtered and sold from the factory in 210 litre, 5 litre and 2.5 litre containers. The expeller is of an Indian make bought second hand 30 years ago. The plant was not in

operation until 10 years ago. The owners have modified most parts in order to utilise local raw materials.

Although old, the machines appear to be functioning well at 40% daily capacity. There appear to be few operational constraints as the plant is a family concern. The management would however like to replace the old plant with a more modern one but the current economic situation does not permit such a large investment unless soft-term loans were to be made available.

4.10 ROBINHOOD PRODUCTS-LUSAKA

Robinhood products is also a private company which processes sunflower seed. Robinhood's production process is exactly the same as ZAMOIL's. They have four expellers with a total installed capacity of 12 mt per day. The equipment was purchased from United Engineering of Calcutta.

The machines were operating well until 1984 when a fire destroyed a lot of equipment. Since 1984 the machines have been rehabilitated but are presently only operating at 3 mt per day on a very irregular basis, due to frequent breakdowns. Robinhood buy almost all of their oil seed requirements directly from farmers and only any shortfall from PCU's. They sell their oil and cake directly to consumers.

4.11 SAMEER OIL PRODUCTS

SAMEER have just commissioned their oil plant in April this year and they are processing sunflower seed. They clean, decorticate and cook/condition the seed before expelling. The crude oil is filtered and sold to retail outlets and the cake is sold to farmers.

The SAMEER plant was bought from Aulia Engineering of Pakistan and has an installed capacity of 15 mt per day or 3,600 mt per year on a 240 day basis. So far they have encountered no problems with their machines and have maintained production at rated capacities.

40

SECTION 5 - REVIEW OF THE OIL SEED SECTOR - IMPACT AND CONSTRAINTS

SECTION 5

REVIEW OF THE OIL SEED SECTOR - IMPACT AND CONSTRAINTS

5.0 INTRODUCTION

Having reviewed the general constraints to full utilisation of existing crushing capacity this section evaluates the impact of and constraints of the other parts of the oil seed sector. The following are considered:

(a) oil seed producers;

(b) refined oil consumers;

(c) by-product consumers;

(d) import and export organisations.

We then discuss the reformatory policies being formulated and implemented by the Government of Zambia, aid agencies and the processors to overcome major constraints.

Finally, the total national oil seed production, marketed output and actual utilisation is reconciled to assess areas of imbalance.

5.1 OIL SEED PRODUCERS

There are a number of constraints on oil seed producers which include:

(a) limited access to credit for small scale farmers;

(b) insufficient extension facilities;

(c) low producer prices

(d) poor marketing systems.

Credit

The existing marketing organisations, with the exception of ZCFFS and LINTCO who provide seasonal loans, do not provide any credit facilities to the small scale farmers. Credit is provided by the Development Bank of Zambia, Lima Bank and the commercial banks to a few emergent and commercial farmers who have adequate collateral. The lack of credit to small scale farmers prevents them from investing in improved inputs and expanding production.

Extension Services

For producers in the oil seed sub-sector the major problem is the need to improve yields and quality. The present production techniques are very poor with resultant losses in yield and quality. The GRZ extension network is very inefficient and the marketing organisations do not have an advisory unit to provide up to date information on new varieties and production methods. In addition to this the limited availability and poor quality of inputs and their unreliable delivery discourage producers from using the existing marketing system.

Price

Price structures and marketing problems have a direct effect on oilseed production. According to the Commercial Farmers Bureau, the 1986/87 producer prices announced by MAWD are insufficient to cover the costs of inputs. In their 1986 journal "Farming in Zambia", costings show that their breakeven prices are K179 for soyabeans and K130 for sunflower as compared to the GRZ producer prices of K148 and K70 respectively. The CFB breakeven prices for groundnuts and cotton seed are not available. The CFB, therefore, has to negotiate crop prices with ROP on behalf of their members.

Marketing

There are four important problem areas in marketing which are common to all oil seeds and which affect producers and processors of oil seeds. These are:

(a) Organisation of Marketing: The organisation of the marketing system is different for each oil seed crop. We discuss each one separately below:

(i) Sunflower: Almost all purchases are made directly by the PCU's or their commissioned agents. For this purpose, several hundred buying depots have been created. The problem lies with the staffing of these depots, where the operating times depend on the attendants. The farmers sometimes have to wait for days to get their produce accepted. Payment for their goods is often made months later.

The marketing of sunflower is characterised by the absence of quality differentiation as all sunflower seeds are bought at the same grade A price. This has led to farmers not cleaning their seed and selling it with large amounts of dust, grit and pebbles. Processors complain about this poor quality seed. The problem with dirty sunflower is so severe that within one week of installation, holes have occurred, by abrasion, in pipes carrying the seed into the storage bins at ROP Lusaka. The problem is compounded at ROP because the seed cleaning apparatus is in such a poor

state of repair that seed can no longer be cleaned prior to expelling. This results in excessive wear on the expellers.

(ii) Soyabeans: Since 1983, LINTCO has been involved in marketing of soyabeans from small-scale farmers. PCU's continue to deal with the marketing of soyabeans from large and medium-scale farmers. PCU's then sell the soyabeans either to ROP or to NAMBOARD, who in turn sells to ROP or other processors. The Lusaka Co-operative Union co-ordinates with LINTCO on matters like storage, pricing and transportation to processors.

The main problem faced by large scale soyabean farmers in marketing is that of product disposal. For instance, in 1984 over 10,000 mt out of the 13,000 mt produced was not utilised because ROP was having operational problems with their soyabean processing. Apart from ROP, no processors utilise soyabeans. Also if ROP cannot utilise the soyabean, the PCU's (Lusaka) bear the cost of storage and interest on their overdraft. During major breakdowns ROP are unwilling to buy the crop due to lack of storage space. Large scale farmers sometimes export their soyabeans to Zaire unofficially because of this constraint (Javahri FAO). PCU's are not allowed to do this and have occasionally discouraged farmers from selling their produce to them. All the produce from the small scale farmers is bought by LINTCO.

ROP's processing facilities for soyabeans are limited. In Lusaka it has a rated capacity of only 40mt/day and the plant is supposed to operate for 240 days. But this is seldom the case (Table 4.1). The Ndola plant is very old and although it has an installed capacity of 80 mt/day it can barely operate beyond 20mt/day when serviceable. This limitation in processing capacity makes soyabean a risky crop for farmers who do not have their own crushing facilities.

The soyabean marketing system for small scale farmers involving both the PCU's and LINTCO, appears to be working well. Farmers are satisfied with LINTCO's facilities and their small-scale soya production division is geared for a large expansion in the near future.

(iii) Cotton Seed LINTCO has since 1979 been the sole organisation responsible for processing seed cotton and marketing lint and cotton seed in Zambia. Recently, however, this monopoly has been liberalised and Hoechst and Lonrho have also gone into seed cotton processing. They buy seed cotton from LINTCO and sell all their cotton seed to it for further distribution to processing plants. LINTCO has about 80 permanent

44

depots and 200 mobile collecting points. The EEC has also assisted with the construction of 18 more rural depots through which they sell inputs on a simple credit scheme and recover costs through the sales of seed cotton. In April each year LINTCO supply packing materials through the input channels prior to harvesting in June/July. Farmers are responsible for transportation of their seed cotton to one of LINTCO's depots. Grading is visual and based on foreign matter content. Payment is made within a month of delivery.

LINTCO appears to have no major problems with the supply of inputs and the marketing of seed cotton. The problems that LINTCO encounter are usually the general supply of inputs and packaging material and the availability of transport.

Despite LINTCO's relative success in increasing seed cotton output, there is one major problem as far as its oil seed is concerned. This is the disposal of fuzzy cotton seed. ROP utilises very little of the total production as can be seen on Table 4.1. BRR has only just started production and their utilisation capacity, though currently good, remains unproven in the long run. However, LINTCO does sell cotton seed directly to farmers for stockfeed. In 1984 they sold over 2,000 mt, but the oil content of the seed goes to waste and the price received is only two thirds of the price paid by processors.

ROP's utilisation has also been unreliable to date. In 1985, they projected 14,400 mt but utilised only 6,800 mt of cotton seed.

LINTCO is expanding its seed cotton production in association with some private organisations. The ginning capabilities have also increased by 32,000 mt per year from the 1986/87 season.

The consumption situation has improved marginally since BRR came into operation (Table 4.1). They will utilise between 12,000 mt to 14,500 mt annually. However, despite this it looks likely that the disposal of fuzzy cotton seed will remain a problem for LINTCO unless more crushing plants are established.

In 1982 ROP bought 10,000 mt of cotton seed from LINTCO and exported it to Zimbabwe for processing. Only crude oil was brought back. The seed cake was therefore not available for use by the Zambian farmers.

LINTCO incurs losses on storage of fuzzy seed and suffers the consequences of deterioration in oil extracting capacity.

45

LINTCO is constrained by INDECO from exporting the surplus fuzzy seed.

(iv) Groundnuts

Outside the Eastern Province, the marketing of groundnuts is largely free from control, except that the PCU's are the buyer of last resort. In the Eastern Province, which produces over 90% of Zambia's production, the marketing of groundnuts is ECU's responsibility. ECU estimates that they only market 15 - 20% of the groundnut crop and over 80% is sold through the unofficial market. This is mainly due to the higher prices offered by private traders who also buy at the farmers' terms and conditions, buying unshelled groundnuts without weighing. Most private traders bring their own bags for packaging groundnuts. In Eastern Province there are now established middlemen who buy from the farmers and sell to urban consumption centres.

The scope for using groundnuts for oil processing is limited even in the long run. The demand from and price offered by confectionary operations is very high. It would be uneconomical to crush them at that price.

(b) Storage capacity: PCU's and NAMBOARD storage capacity in the main production provinces is 251,400 mt (MAWD, Planning Division, Statistics Section) including existing capacity and planned storage under aid construction programmes. Only about 20% of this capacity is in covered sheds. According to a recent survey, this is all utilised for maize storage. Maize, being the staple food, is given priority and other crops including oil seeds are invariably stored in temporary facilities. This affects the quality of the oil and cake.

The oil processors have very limited storage facilities, up to a maximum of 3 months' capacity. Low crushing capacity utilisation imposes lengthy oil seed storage periods and affects the quality of oil seeds.

(c) Availability of bags for packing and storing seeds: This appears to have been a perennial problem since 1980 but the 1985/86 season was particularly bad. Farmers did not have the cost to buy sacks (K4 per sack). A small scale farmer producing 100 bags needed K400 just to pack his produce. According to ECU, this was a major constraint on the small scale rural farmers who did not plan ahead and expected free bags. The ECU felt that some oil seeds may have gone to waste due to non-availability of sacks.

46

Figure 5.1

Geographic Distribution of Refined Oil as a Percentage of Total ROP Output

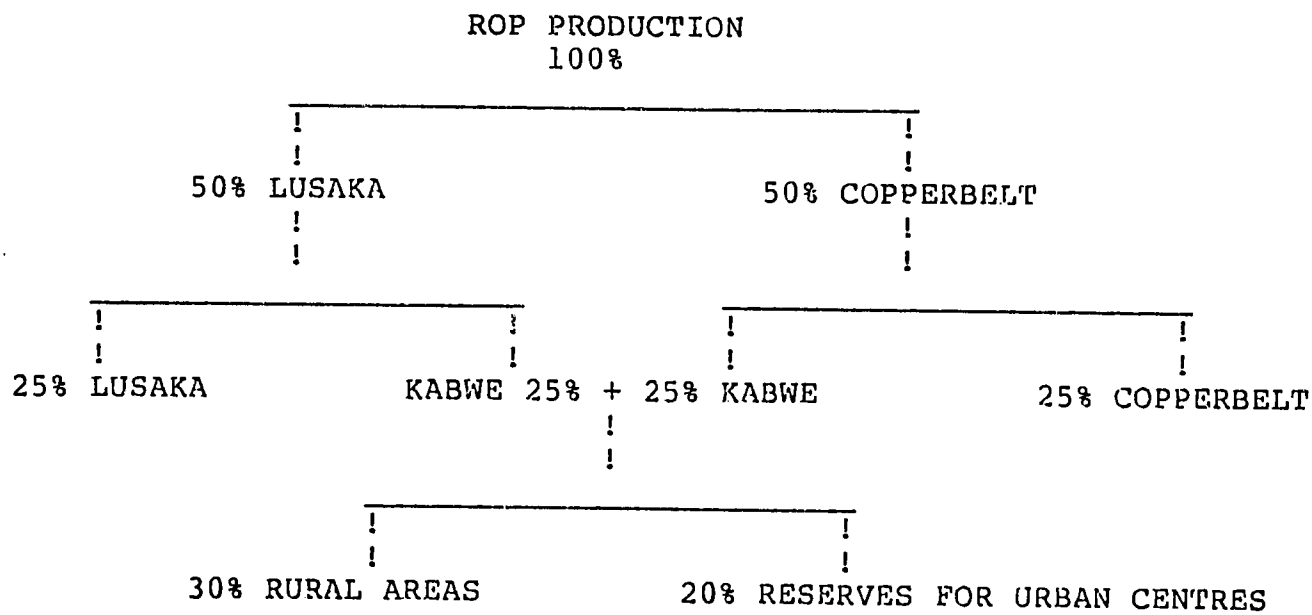

(d) Transportation: The unions and NAMBOARD rely on private truckers. Since sunflower, seed cotton and now soyabeans are grown by small scale farmers scattered in remote parts of Zambia, without a good road network, some truckers are reluctant to go into these areas to collect the produce. Again maize is given priority for both collection and safe storage. This, compounded with the shortage of spare parts for the transport fleets, results in substantial quantities of crops being transported late or being destroyed in the rain. The impact of this factor on each oilseed crop varies depending on the organisation dealing with it.

5.2 REFINED OIL CONSUMERS

Prior to 1983, ROP was responsible for the physical distribution of refined oil in Zambia through rented depots in urban areas. In 1983, due to shortages of refined oil in outlying districts, GRZ appointed the Zambia National Wholesale and Marketing Corporation Limited (ZNWMC) to undertake the distribution function and ROP was to concentrate solely on oil seed processing.

ZNWMC collects oil from ROP depots in Lusaka and Ndola. About 50% of Lusaka ROP refined oil is distributed in Lusaka and the other 50% is sent to ZNWMC depot in Kabwe. Similarly 50% of the Ndola refined oil is distributed on the Copperbelt and the other 50% is brought to their Kabwe depot. The Kabwe depot reserves are then used to supply the out-lying districts and any shortage on the line-of-rail. ZNWMC estimates that on average less than 30% of the total ROP production is distributed in outlying rural areas. Figure 4.1 shows the geographic distribution of refined oil as a percentage of total ROP production.

In addition to the above, the current marketing system imposes package size problems for consumers, i.e. small packages are not available and consumers are obliged to buy 2.5 litre or 5 litre containers. The smallest breakdowns at ROP causes panic-buying by consumers in anticipation of a shortage. For instance, the breakdown at the Ndola ROP plant in October this year caused an acute shortage of refined oil on the Copperbelt.

5.3 BY-PRODUCT CONSUMERS

The current processing system has a higher refining capacity in relation to the crushing capacity. This means that more crude oil can be refined than domestically crushed. To utilise its surplus refining capacity ROP, therefore need large quantities of crude oil from overseas. The problem with refining imported crude oil is that the by-product is not available. The farmers and stock feed manufacturing companies therefore lose this very valuable import substitute for feeding the livestock.

Farmers in Mazabuka sometimes travel all the way to Ndola to collect soya cake from ROP. Soya cake is preferred to sunflower cake because of its higher nutrientional value for stockfeed, especially dairy and poultry. ROP Lusaka produces only about 30 mt of double toasted soya cake per day. Most of this is used by the National Milling Company and very little is sold to the farmers directly.

5.4 IMPORTERS - EXPORTERS

Currently there is a ban on all exports of oil seed and products. ROP is occassionally given concessions to export when their processing capacity is low, due to production problems and there is a danger that the oil seed may go to waste unless it is exported or processed in another country.

To date we are aware of two such transactions in which sunflower and cotton seed were exported to Zimbabwe and South Africa in return for crude oil from the seed. The foreign processors retained the cake for their own use. ROP have not advised us of any other exports.

Imports of oil seeds, refined oil products and by-products are not organised by any one organisation. Private traders, farmers and milling companies import their requirements directly whenever there is a shortfall locally.

5.5 GRZ POLICIES TO OVERCOME CONSTRAINTS

The Government policy is:

(a) to encourage increased production of oil seed crops of higher quality to meet the national requirements for edible oils and stock feeds;

(b) to ensure the continuous supply of raw materials to various existing oil seed processing plants.

The Fourth National Development Plan, being prepared this year, outlines the following policies to overcome constraints in the oil seed sector:

(a) provide improved extension services to promote oil seed production;

(b) ensure adequate and timely availability of inputs;

(c) liberalise marketing channels;

(d) introduce grading procedures for oil crops to minimise foreign matter:

(e) introduce an oil seed pricing scheme based on grades;

49

(f) encourage the use of small scale expellers in rural areas;

(g) expand cotton storage and processing facilities.

The Government estimates an investment of K440 million in the next 5 years. They recognise that pricing is a major factor in determining the success or failure of the oil seed sub-sector in Zambia and are trying to provide the right incentives.

Some of the above policies have already been implemented. As a result of the liberalisation of marketing channels, the farmers are free to sell their produce to the highest bidder and the official marketing organisations are only buyers of the last resort. The only exception to this is seed cotton and small scale soyabeans, for which LINTCO still holds the monopoly groundnuts for which ECU holds a monopoly.

To ease the constraint of poor quality seed on processors, GRZ is introducing grading procedures. Already ROP has offered higher prices for hybrid sunflower seed to encourage farmers to grow a better crop. MAWD has also formed a National Oil Seed Grading Committee to prepare guidelines for separating high quality seed from poor quality dirty seed. This will give farmers an incentive to grow and harvest their seed more carefully to get higher prices for higher grades.

The Government is also providing numerous incentives to private organisations and individuals to encourage development of small scale processing plants. For instance, BRR in Kabwe have been classified as a priority industry and have received 5 years tax-free incentives and favourable considerations on excise duty for machinery, because they were going into an essential commodity production. GRZ have also encouraged donor agencies to review the oil seed processing sub-sector.

5.6 ROP PLANS TO IMPROVE PERFORMANCE

The oil processing sub-sector is undergoing managerial and operational restructuring. For instance, in 1985, INDECO requested Zambia Engineering Services (ZES) Limited of the United Kingdom for assistance to improve ROP's performance. To this effect, ZES seconded four expatriates at senior management levels for an initial duration of two years. The ZES team carried out an indepth evaluation of the current operations and identified thirty major activities which needed attention to increase the operational capacity of the plant. They budgeted about K10m (at US $1 = K5.00) for the overhaul and modification of plant (excluding ZES Engineering manpower and procurement costs).

Appendix I gives a breakdown of their preliminary budget and work schedule. To date the ZES team has altered the work schedule to increase output and have taken the following steps to improve productivity:

60

(a) They have installed safety gears in the crushing and refining plant.

(b) They have commissioned ZECCO to construct an effective drainage system to prevent the silos from flooding during the rainy season.

(c) They have bought new silo conveyer chains from South Africa to increase input into the processing plant.

(d) The current BUHLER system is thought to be unsuitable for soyabeans. ZES have ordered a new meal desolventiser plant from Simon-Rosedown Limited of UK at the cost of £250,000. The unit is expected to be installed by 1988. This desolventiser/toaster will have an installed capacity of 250 mt/day of soya cake or 200 mt per day of sunflower cake.

(e) They have contacted Portals Water Treatment of South Africa to provide a water softening plant. This is considered an essential requirement as the water in Lusaka is very hard and cloggs up the boiler/cooker plant pipes, which in turn cause operational problems.

We are informed that Lever Brothers may take over the management of the soap division of ROP and that Heinz may to provide management expertise to the refined oil division. This will hopefully improve ROP's overall productive and economic efficiency. This segmentation of ROP's activities should also lead to a greater control of activities within each plant and facilitate effective decision making because of the reduction in the size of operations. The new management partnership will bring increased investment and improved management techniques to the refined oil division.

ROP Ndola intend to invest in a cotton seed expeller and the current machines are being rehabilitated. Apart from this action, ROP Ndola has not indicated any major improvement strategy or investment plans for the future.

ZES hope that, with their implementation plan, ROP Lusaka, will reach its rated capacity and operate more efficiently. They are concerned, however, that should the Heinz deal go through, all their plans may be altered at short notice. Heinz have indicated to ROP management that, should they accept ROP's management, they will carry out a job evaluation study and may have to dismiss up to 50% of the existing workforce.

5.7 RECONCILIATION OF DATA

In table 5.1 we present the total national oil seed production, marketing and utilisation levels. In total there appears to be a surplus of all oil seeds over and above what the country can use.

ROP carry all left over stock from one year into the next. They did not advise us of any major exports in the past, however, other information sources indicate that these have occurred on an ad hoc bases.

Cotton seed and soyabeans appear to be worst affected and this was confirmed by the Commercial Farmers Bureau and LINTCO who find crop disposal a serious problem due to ROP's limited crushing operations.

This problem would not exist if ROP could improve their crushing capacity utilisatioin to about 60% of planned capacity, as will be seen in section 7.0.

The uncrushed cotton seed is currently sold directly to farmers for stockfeed. This wastes the oil content of the seed as the livestock does not benefit from the oil content in any way.

We do not have data on sunflower crushed in 1986 from ROP, therefore, in table 5.1 we estimated about 15,000 mt crushed.

62

Table 5.1

Reconciliation of Data

National Oil Seed Production Marketing and Utilisation Levels (mt)
1980 - 1986

	1980	1981	1982	1983	1984	1985	1986
SUNFLOWER							
Production	13,000	18,965	20,835	32,400	42,967	42,424	25,000
Marketed	10,662	18,637	20,246	30,464	40,425	25,496	23,750
Total Crushed	7,044	8,672	27,310	26,302	24,018	39,591	35,950
Surplus/(deficit)	3,618	9,965	(7,064)	4,162	16,407	(14,095)	(12,200)
SOYABEANS							
Production	1,840	4,074	5,805	7,950	13,153	14,737	12,600
Marketed	1,012	3,673	3,914	6,898	9,556	10,601	11,700
Total Crushed	1,580	2,680	5,001	5,436	3,057	5,687	5,000
Surplus/(deficit)	(568)	993	(1,087)	1,462	6,499	4,914	6,700
COTTON SEED							
Production	13,745	10,306	7,685	18,567	26,344	18,152	19,407
Marketed	13,745	10,005	7,666	18,737	26,345	18,152	19,407
Total Crushed	1,510	761	Nil	376	7,524	13,801	8,060
Surplus/(deficit)	12,235	9,244	7,666	18,361	18,821	4,351	11,347
GROUNDNUTS							
Production	2,054	1,427	9,372	10,980	13,273	14,519	18,184
Marketed	2,055	1,327	764	1,041	1,157	2,419	4,001
Total Crushed	244	288	344	400	520	80	1,500
Surplus/(deficit)	1,811	1,039	420	641	637	1,619	2,501

Source : FAO/GRZ Final Crop Forecast May 1986.

Total crushed data - Inventory of Processors, Database.

SECTION 6 - REVIEW OF THE OIL SEED PROCESSING INDUSTRY - THE SMALL SCALE PROCESSORS

SECTION 6

REVIEW OF THE OIL SEEDS PROCESSING INDUSTRY - THE SMALL SCALE PROCESSORS

6.0 INTRODUCTION

We have undertaken an indepth survey of the small scale oil expellers and 40 expellers with capacities ranging from 20 kg bags per hour to 180 kg bags per hour have been identified.

The survey involved identification and location of all existing small scale expellers to determine their oil crushing capacity and examine their development. This was done mostly by personal interviews with owners as very little data is available elsewhere. Questionnaires were not considered suitable as most of these processors are located in rural areas and most operators found it difficult to answer fixed questions on paper.

N. McFarlane's study of the Oil Seed Sector, 1983, examined the possibility of introducing small-scale expellers to produce oil. He found that the small-scale expellers can effectively utilise local raw materials and alleviate the serious shortage of edible oil in the rural areas. The GRZ Task Force Report also recommends small scale expellers as the only economic way of making edible oil available in the rural areas.

Consequently donor agencies became interested in the promotion of small scale expellers. In 1984, the British Overseas Development Administration funded a Small-Scale Oil Seed Processing Advisor to be based in Kabwe.

In this section we discuss the current situation in the small scale processing sector under the following headings:

(a) inventory of small scale processors;

(b) marketing channels;

(c) current and proposed support for the oil sector;

(d) Government policy and plans.

In the next section we go on to discuss the potential for further development.

6.1 INVENTORY OF SMALL SCALE OIL PROCESSORS

During the survey a total of 40 small scale expellers were identified and of these 24 were visited. A complete inventory of these expellers is presented in Appendix III.

Until 1982 there were few small scale oil expellers Zambia, although some individuals and donor agencies funded a limited number of small scale expellers on an experimental basis. Since 1982 the number of small expellers has increased dramatically. In 1985 especially a number of religious groups in rural areas funded small-scale expellers as a means of alleviating oil shortages in their regions.

Almost all the expellers visited use sunflower. The Canisius Mission in Southern Province use toasted soya and decorticated sunflower. None of the expellers reviewed use cotton seed or groundnuts.

6.2 MARKETING CHANNELS

We did not identify any formal marketing system for the small-scale expellers. In most cases processor operators either grow their own sunflower or buy directly from the farmers in the region. In some cases, as in Mazabuka, the owners encourage their workers to grow sunflower and bring it to the expeller. They then crush the oil seed, retain the cake and give the crude oil to the grower. This has encouraged the women in the area to plant small plots of sunflower as they see immediate tangible benefits.

At the beginning of the marketing season farmers either go out and buy their requirements from growers in the area or encourage growers to bring it to the farmers' gate. If the farmer sends his own transportation then the price paid is K2.00 less per bag. However, if the grower brings the produce to the processor's site he receives K2.00 more than the official price. These small scale expellers use about 100 mt of oil seed per year and most farmers/users have old barns or thatched huts for storage. They can therefore buy all their requirements at one time. Those who cannot store oil seed at the beginning of the season have to buy from the PCU's at a higher price. Whereas they have to pay the producer about K41.95, they have to pay PCU's K51.95 per bag with a K5 deposit for each sack. In addition, they have to provide their own transport. On the other hand, they do not have the costs of holding their stock of seed.

Some of the small-scale processors in urban areas have storage problems due to lack of covered space. These operators buy from farmers at the beginning of the marketing season and supplement this by buying from the Provincial Co-operative Unions at other times of the year.

There is no formal marketing system for the crude oil and seedcake output. All the small-scale expellers in the rural areas, without exception, use 210 litre drums for storing clean, cloth-filtered oil and simply siphon oil into containers brought by the consumers. The price charged is usually the same as the prevailing ROP price. The small operators produce about 32

litres of oil per day. None of them have any problems in disposing of this output. In fact, all indicate that they cannot meet the demand from their surrounding villages.

The small-scale expeller operators in urban areas on the other hand, have to compete with the large-scale processors. They have to pack their oil in 2.5 litre or 5 litre plastic bottles and send them to retail outlets for sale. There are no on-the-gate sales as they feel this encourages pilfering and private selling by their workers. Occassionally, they have problems in disposing of their stock, especially when ROP is operating well. In one particular instance, a small manufacturer could not find a market in Lusaka and had to transport his oil to Chisamba, about 60km from Lusaka, for sale. Sale of seed cake does not present a problem in either the rural or urban areas.

6.3 CURRENT AND PROPOSED SUPPORT FOR THE OIL SECTOR

There are numerous organisations such as SIDO, ODA and ZCF involved in supporting, assisting and promoting small scale expellers in Zambia. These organisations provide services ranging from technical advice on the suitability of expellers to the preparation of feasibility studies for bank funding and provision of credit for the machines. Some aid agencies are also funding small scale expellers. We discuss below the following services:

(a) technical advisory services;

(b) engineering support;

(c) project identifiation and provision of credit;

(d) donor agencies.

6.3.1 Technical Advisory Services

The only institution providing this service effectively is ODA through their Small Scale Oil Seed Processing Project in Zambia. Through this project, they have provided a Technical Co-operation Officer (T.C.O.) who has been seconded to MAWD and is based in Kabwe. The current T.C.O., Tony Swetman, has been assigned to MAWD for two years to undertake research on and commission small-scale expellers in Zambia.

Mr. Swetman initially started the programme with the idea of promoting the Simon Rosedowns mini 40 expeller. His plan was being supported by the Tropical Development and Research Institute (TDRI) of UK. Although the Rosedown mini 40 was found to be suitable, its cost is high at £5,000 FOB London and there is the problem of the uncertain availability of foreign exchange. Also it was found that the shaft used was not readily available locally. Mr. Swetman then contacted local manufacturers with a view to producing a small expeller, with locally designed parts, based on the Rosedowns model. This

venture proved successful and a manufacturer in Mufulira, Panicco Engineering successfully designed and produced a local model priced initially at K35,000, now K50,000. Wear parts for this machine have been tested for one year, during 1985/86, and their performance is found to be satisfactory. The whole machine has not been tested, and the Kabwe Regional Research Office feels that at least one to two years of field testing is needed before any firm conclusion can be drawn on the machine's suitability.

Panicco have started commercial production of their model and are marketing them successfully directly to farmers and through ZCF. Mr. Swetman monitors some of the small-scale expellers in operation and advises any potential buyers on the suitability of various makes to the Zambian market.

6.3.2 Engineering Support

As well as the ability to manufacture expellers, Zambia also has the capability to maintain these machines and to produce the spare parts. Almost all the expeller operators visited indicated that they had found local engineering firms to make their shafts and cage components. A few local firms were named as being excellent for certain machine makes. Even machines which had been in operation for over a decade are still functional, utilising local spare parts.

The cost of the parts made locally is about one third of the equivalent imported part. Although the locally manufactured shafts wear out faster, after about 4 months instead of 6 months, the manufacturers consider that it is still economical to buy locally as the 3 shafts needed for one year will cost less than importing 2 from overseas.

The main constraint on spare parts is finding firms willing to make individual parts to order. Operators often have to wait for 2 - 3 weeks after a local firm has agreed to manufacture the part before it is actually produced. The problem is that these wear parts are not part of any engineering firm's production line and have to be made on a one off basis.

Manufacturing firms indicated that they would provide better services if they had a market for a large number of similar parts as their production would get incorporated into their production/fabrication schedules. If there were a few types of spare parts required regularly then they could be manufactured in advance and sold off the shelf.

Pannico Engineering in Mufulira has the capacity to produce 10 machines per month, and can meet the required demand. Mr. Swetman however feels that this sector should not develop too fast and about 6 machines per year is about the right rate. This slow growth will give the back-up services a chance to develop. Pannico already has a good spare parts set up at their workshop in Mufulira.

58

6.3.3 Project Identification and Provision of Credit

SIDO was established in 1984 to assist the small scale entrepreneurs with the identification and evaluation of projects. When a project has been identified SIDO economists prepare a report on the feasibility of the project. If the project is found to be viable the report is submitted to the Development Bank of Zambia (DBZ) for funding.

Although SIDO have no specific policy for oil seed expellers they have received over 42 applications for project appraisals. After reviewing each case, 15 of these were considered viable. They sent their recommendations on these projects to DBZ. To date, none of the SIDO evaluated projects have been funded. In fact, SIDO complains that, out of a total of 63 projects submitted to DBZ in the past 3 years, only 5 have been funded. None of these were for oil expellers.

DBZ consider that SIDO reports lack quality and they are not considered to be authentic. Before DBZ agree to fund a project they send their own staff to carry out an indepth appraisal.

DBZ have funded two small expellers in Lusaka through the Small Scale Enterprises Promotion Limited , SSEP, which is funded by DBZ and the Frederick Ebert Foundation of West Germany.

None of the commercial banks in Zambia have any special funds backed by Government or donor agencies for disbursement as soft term loans to the small-scale sector.

SIDO consider that DBZ have a very "conservative" attitude towards small scale industry and thus give them a very low funding priority.

In our opinion both SIDO and DBZ have a case. The SIDO reports are not comprehensive and well researched. DBZ considers the small scale sector risky and do, by their own admission, back the larger industries. They do not have any special funds for the small scale sector. The small scale sector therefore competes for funds with other sectors.

6.3.4 Local and Donor Agencies

The European Economic Commission (EEC) in Zambia has indicated their intention to import five small scale presses, probably the Simon Rosedowns mini-40. They have not yet decided on where they should be used, but feel that the IRDP's will privide effective operating facilities as they already have the basic infrastructure and organisation at district level.

SIDA has taken a keen interest in the locally produced machines and have given funds for the purchase of nine machines by ZCF. ZCF has bought these, one for each provincial headquarters. The machines will be operated by co-operatives. ZCF (with SIDA assistance) is buying another 40 machines.

ZCF intends to use SIDA funds to buy these machines and to loan them out to co-operatives at low interest rates. Mr. Gunner Netz, the Technical Adviser to ZCF from SIDA is very impressed with the Pannico machine and feels that this locally manufactured product should be encouraged.

The FAO Oil Seed Production Project is providing institutional support in Central, Eastern and Southern provinces. They are providing seasonal credit to small scale producers for sunflower and soyabean production. This credit is channelled through ZCF Financial Services Limited and disbursement of funds is through PCU's. There is no provision for small scale expellers and the FAO have only budgeted $150,000 for ROP Lusaka to improve their productivity.

OXFAM has funded the Canisius Mission press. They are interested in funding other small presses in the near future but have not yet formulated a definite policy.

The German Techncial Assistance Programme (GTZ) has shown a keen interest in the small scale expellers. To date they have funded three expellers, based in Solwezi in North Western Province, Kawambwa in Luapula Province and Kabompo in Western Province.

The Dutch Government has also funded two small scale expellers: One in Kaoma, Western Province and another in the Gwembe Valley.

AFE Limited imported two Chinese presses on an experimental basis and wanted to import eight more but have decided not to because of the current financial situation. They feel that costs are too high.

6.4 GOVERNMENT POLICY

Although there is a general policy of encouragement for the small scale processing sub-sector, the Government has not been able to draw up clear policy objectives to promote this sub-sector. The Fourth National Development Plan, for instance, does not elaborate on how it will "generalise the usage of small scale expellers in rural areas".

In 1985, the Government held a workshop at Mount Makulu, to find ways to promote and monitor the development of the small scale oil expellers. The Farm Engineering Section of MAWD was given the responsibility to inventory all the small scale expellers and recommend the most suitable machines for the Zambian environment. We contacted the Farm Engineering Department but they have not yet started on the oil expellers research, because of lack of transport. Tony Swetman of ODA is perhaps the only individual supporting this sub-sector with research on wear parts, etc.

There are no specific incentives for small scale expeller operators and, apart from ZCF, no investment policy. ZCF has not actually started a credit scheme for small scale expellers but is working on a programme with SIDA to assist their member societies

in rural areas. None of the commercial banks have any special schemes for funding small-scale expellers. The small scale operators are not in a position to invest in new ventures at the current high interest rates and would benefit from a credit scheme.

In the Fourth National Development Plan (Draft), the strategy for the oil seeds sector is aimed at achieving self sufficiency in edible oils by 1990, primarily through increased productivity. The Government's processing strategy involves the establishment of small scale expellers which will be operated by co-operatives, commercial farmers and private companies.

The Task Force report forecasts the need for one medium size (50 mt/day) processing plant and 250 small scale expellers by the year 1990. On the other hand there is a report from the Honourable Minister of Agriculture and Water Development to the Prime Minister, (June 1986) which considers small scale expellers inefficient because they extract only 15% of the oil from the seed, in comparison to 20% by large and medium scale expellers. They have apparently put forward a proposal to study the viability of collecting the residue from small scale expellers and passing it on to ROP for further extraction.

ROP have already indicated the unacceptability of this scheme as they consider that the system is not only complicated logistically but the processing cost for extracting the remaining 15% from the residue uneconomical.

SECTION 7 - REVIEW OF THE OIL SEED PROCESSING INDUSTRY - FORECAST

SECTION 7

THE OIL SEED PROCESSING INDUSTRY - FORECAST

7.0 INTRODUCTION

Historic information on the production of edible oil from domestically produced oil seeds and imported crude oil has been reviewed in the last two sections. In this section we assess the potential for development of the oil seed processing industry. To this effect we consider:

(a) processing capacity;

(b) domestic oil seed production;

(c) domestic crushing and refining capacity;

(d) edible oil seed by-products;

(e) demand for oil and by-products;

(f) oil seed expansion requirements, and

(g) impact of imports.

7.1 PROJECTED PROCESSING CAPACITY

7.1.1 Current Situation

Sunflower: There are seven major sunflower processing plants in addition to about 40 small-scale artesanal processors. The ROP Lusaka plant is by far the largest with a planned crushing capacity of 76,160 mt per year. The existing oil seed processors could between them crush a total of 112,648 mt of sunflower, which would yield 29,383 mt of crude oil as shown in table 7.1.

Soyabeans: There are two commercial soyabeans processors and one stockfeed manufacturer. ROP Ndola, ROP Lusaka and ZATCO in Choma could crush 20,700 mt of soyabeans which can yield a maximum of 3,519 mt of edible oil, at a 17% oil extraction level (with simple extraction) and 13,869 mt of seed cake at a 67% cake extraction level.

Cotton seed: At present there are two cotton seed processing plants in Ndola and Kabwe. The two plants have a planned crushing capacity of 24,000 mt which will yield 3,840 mt of crude oil, at a 16% oil extraction level, and 12,000 mt of cake at a 50% cake extraction level.

Groundnuts: Groundnuts are processed only by Zamoil of Luanshya which can crush 4,200 mt annually to yield 1,596 mt of crude oil, at 38% oil content, and 2,436 mt cake, at 58% cake output.

Table 7.1

Sunflower Seed Processing Capacity

	Capacity to Process Seed (mt)	Oil Content (%)	Cake Content (%)	Oil Output (mt)	Cake Output (mt)
ROP Lusaka (Solvent Extraction)	76,160	29	45	22,086	34,272
Other plants (Simple Extraction)	36,488	20	60	7,297	21,893
Total	112,648	-	-	29,383	56,165

7.1.2 Estimated Processing Capacity

Table 7.2 shows the total oil seeds planned capacity in Zambia. Planned operating capacity as discussed earlier is less than installed capacity. The capacity in table 7.2 is based on the inventory of processors in appendix II.

To compile this table we assumed that ROP's processing plants will operate in 1986/87 at their planned capacity as given earlier in table 4.1. For the other processors we assume that they operate at installed capacity for 240 days per annum. ROP Lusaka have ordered a Simon Rose-Down Desolventiser with rated capacity of 50,000 mt/year (240 days, 85% utilisation), to become operational in 1988. This capacity is also included in the estimates.

On the basis of installed and planned capacity, Zambia appears to have sufficient processing capacity to utilise the total projected oil seed crop as shown in table 7.2.

7.2 POTENTIAL DOMESTIC OIL SEED PRODUCTION

In view of planned renovations and new installations the processing capacity has been estimated for the next five years. From table 4.3 it can be seen that ROP's capacity is grossly underutilised. The demand for sunflower seed has increased tremendously after the medium scale processing plants were established in 1984 and 1985. The demand for sunflower is expected to increase further at the end of 1987, when ROP completes its rehabilitation programme and the new medium scale processors become fully operational.

The situation for soyabeans is different as the demand to date has been lower than the national output. ROP Lusaka, ROP Ndola and ZATCO are the major users of soyabeans. E.C. Milling and other stockfeed manufacturers import soyabeans for their requirements. The demand for soyabean will increase sharply in 1988 after the new 250 mt/day Simon - Ross Down Desolventiser is commissioned by ROP Lusaka.

Cotton seed is perhaps the most underutilised oil seed in relation to production. ROP uses very little of the national output from 1980 to 1986. BRR will require a maximum of 12,000 mt of cotton seed. Unless both ROP and BRR operate at the maximum planned capacity there will be surplus cotton seed in the market.

There are several organisations involved in the promotion of the oil seed sector and some of them are reviewed here. The Task Force Investment Plan has identified sunflower as the oil seed with the highest potential in Zambia because of its low input costs and management requirements. They estimate a required investment of K500 million over the next 5 years. The FAO/ADB Oil Seeds Development Project Proposal calls for an increase in oil seeds production with emphasis on soyabeans and sunflower.

Table 7.2

Planned Oil Seed Processing Capacity (mt)
(1986 - 1990)

OIL SEED	1986*	1987	1988	1989	1990
Sunflower	112,648	113,750	115,012	116,196	117,274
Soyabeans	20,700	20,700	70,700	70,700	70,700
Cotton Seed	24,000	24,000	24,000	24,000	24,000
Groundnuts	4,200	4,200	4,200	4,200	4,200
Total	161,548	162,650	213,912	215,096	216,174

* Estimated existing processing capacity Annex II.

The cost of the FAO/ADB project is estimated at K40.7 million. This project is based on a very wide range of activities which attack the current constraints on the production and marketing of oil seeds.

LINTCO is also embarking on a big expansion programme to develop seed cotton production in association with two large multi-nationals in Gwembe and Mumbwa Districts. As described in section 5.1.1 these large projects should make a significant contribution to the increasing cotton seed production. For soyabeans INDECO, a Government parastatal has promised to invest K1.0 million to assist LINTCO to boost the small scale soyabean production.

MAWD's Task Force prepared comprehensive oil seed crop estimates for the Fourth National Development Plan. They project that oil seed production will continue to expand though not enough to meet the national demand. Table 7.3 shows the Task Force projection and LINTCO's fuzzy seed expansion estimates, which were prepared in July 1985.

According to Mount Makulu and the MAWD Task Force, LINTCO's fuzzy cotton seed projections are too optimistic. They consider that, although LINTCO will replicate some of their past successes certain factors, outlined below, may result in the actual output being less:

(a) LINTCO may achieve their targeted hecterage but as their operations expand their extension and input supply resources will become increasingly stretched and this could affect adversely their production targets;

(b) new farmers entering LINTCO schemes will increasingly be less innovative and productive and some may even switch to LINTCO's soya scheme as that appears to be more profitable;

(c) the quality of the seed and yields are not being improved to achieve higher productivity.

The MAWD Task Force estimates in table 7.3 take these constraints into consideration.

The FAO-GRZ Project on Crop Forecasting and Early Warning System, May 1986 Report, in collaboration with the Central Statistical Office, Provincial Crop Forecasting Committees and the Department of Meterology, finalised a crop forecast up to the 1986 season. Their outlook for the 1986 season production of sunflower is only 25,000 mt as opposed to the Task Force forecast of 40,609 mt. Val Eylands, Zamare Sunflower Agronomist, also estimates a lower output than the Task Force at 29,000 mt in 1986. He forecasts a continuous downward trend unless producer prices are increased and marketing of inputs made more efficient.

Similarly, with soyabeans, FAO-GRZ estimate an output of 12,600 mt in 1986 season as compared to the 18,444 mt estimated by MAWD/Task Force.

67

Table 7.3

Crop Production Projections for Oil Seeds (mt)
1986 - 1990 (Task Force Report)

Oil seeds	1986	1987	1988	1989	1990
Sunflower	40,609	44,736	48,840	52,956	57,072
Soyabeans	18,444	20,748	21,900	24,204	24,204
Cotton Seed	31,303	33,094	34,885	36,677	38,468
Groundnuts	1,042	1,042	1,042	1,042	1,042
Total	91,398	99,620	106,667	114,879	120,786
Note: Cotton Seed (LINTCO)	48,040	56,920	68,825	78,707	N/A

Source: Investment Plan by the Taskforce, Oil Seeds Sub-sector Annex, MAWD, July 1985.

FAO/GRZ estimate a cotton seed output of 19,407 mt in 1986 while the Task Force estimate 31,303 mt and LINTCO estimate 48,040 mt.

The above discrepancies arise from differences in assumptions and in some cases, probably, for political reasons. FAO-GRZ forecasts are, in our opinion, the most reliable and up-to-date, because, according to the Planning Division of MAWD and Regional Planning Office, NCDP, their data collection network and procedures are efficient and the data collection was carried out by trained personnel.

The GRZ Task Force Report was published in 1985 and the sources of data were many, including CSO, and the criteria for selection of each source of data is unknown to us. In some instances the source of data is not quoted and often we were unable to correlate different sets of data such as oil seed production and edible demand. We, therefore, considered it better to use a consistent source of data which can be easily up-dated in future by USAID. Therefore we based our projections on the FAO/GRZ data. It must, however, be pointed out that MAWD and NCDP are using the Task Force estimates for the Fourth National Development Plan and thus it was considered important to present both in this report.

Table 7.4 give our production estimates based on a linear extrapolation of past trends of data prepared by FAO/GRZ Early Warning Systems Committee.

Linear extrapolation was considered relevant for these projections because a consistant set of oil seed production data was available for the past 10 years. Although production fluctuated from one year to the next, the graphic presentation of the data showed a general linear function. Also the basic conditions affecting production of oil seeds such as GRZ policy, oil seed producer prices in relation to input cost have remained almost unchanged upto 1986.

The projections in our table above are conservative, based on past trends. These projections do not take into consideration the new free market and price policies and the GRZ emphasis on oil seed crop production. Similarly, it must be noted that although there appears to be a direct relationship between sunflower production and rainfall and fertiliser availability, this correlation has not been considered. For instance, if rains are good and fertiliser is available, most farmers grow maize in preference to oil seeds, especially sunflower. This was the case in the 1985/86 season. This year Mount Makulu predict a high sunflower production due to the current fertiliser shortages. The low rainfall relationship accounts for the high oil seeds production in 1982, 1983 and 1984. The rainfall during these years was low and uncertain and farmers planted oil seeds to minimise risks.

Table 7.4

Crop Production Projection for Oil Seeds (mt) (1986 - 1990)

CROP	1986	1987	1988	1989	1990
Sunflower	36,500	38,500	42,500	46,000	48,500
Soyabeans	12,300	14,000	15,200	16,400	18,100
Cotton Seed	22,300	25,000	26,800	28,100	30,250
Groundnuts	14,000	15,200	16,250	17,750	19,100
Total	85,100	92,700	100,750	108,250	115,950

Source: Estimates based on linear extrapolation of FAO/GRZ production trends from 1976 to 1986.

Also the impact of LINTCO's new expansion programmes are not taken into consideration.

It is very difficult to assess the exact implications of all the above factors but it can be reasonably assumed that the current overall market situation should have a positive impact on oil seed production and the actual outputs could be somewhat higher than our estimates in table 7.4.

The expansion projected in table 7.4 is not sufficient to meet Zambia's demand for edible oil during that period. MAWD prepared a report on the Oil Seed Development Programme for the Prime Minister's Office in June 1986, which was based on the Task Force projections given in table 7.3. They projected production levels given in table 7.5 as necessary to reach self-sufficiency in edible oil. Their emphasis is on sunflower production. They consider that the current sunflower production techniques are extremely poor and improved production should be obtainable with availability of the new hybrid seeds from Mount Makulu and better price incentives.

To achieve self-sufficiency, MAWD, Planning Division estimate that production will have to increase to 70,000 mt of sunflower, (assuming sunflower will meet 60% of oil seed demand) 24,000 mt of soyabeans, 38,000 mt of cotton seed and 1,000 mt of groundnuts. The Planning Division of MAWD is confident that these increases can be achieved over the 5 year plan period by the year 1990.

The estimated crop production levels given by the Task Force in table 7.5 are, in our opinion, under estimates of actual oil seed production required to reach self sufficiency in edible oil demand. This table does not correlate with their estimated demand for edible oil given later. So we estimated our own self sufficiency levels for each crop.

Based on our calculations of demand for edible oil given in table 7.10 we estimate the oil seed production targets given in table 7.6. Our estimates for each oil seed crop are based on the assumption that each crop will contribute a certain percentage to the total edible oil demand. The oil content of each crop is based on our extractable oil calculations as shown earlier in section 7.1.

According to our estimates of oil seed production requirements given in table 7.6, there is a significant shortfall in the expected growth potential in production and required growth rates to meet demand for the next 5 years (table 7.4). The production performance given in our oil seed projections (table 7.4) would have to increase on average by over 100% for sunflower to keep up with the required edible oil production and available crushing capacity.

71

Table 7.5

Required Oil Seed Production Targets (MAWD Estimates) (mt) (1986 - 1990)

OIL SEED	1986	1987	1988	1989	1990
Sunflower	40,609	47,939	55,247	62,566	69,885
Soyabeans	18,444	20,748	21,900	24,204	24,204
Cotton Seed	31,303	33,094	34,885	36,677	38,468
Groundnuts	1,042	1,042	1,042	1,042	1,042
Total	91,398	102,823	113,074	124,489	133,599

Source: MAWD Planning Division Oilseed Development Report to the Rt. Hon. Prime Minister. (Based on the Investment Plan by the Task Force).

Table 7.6

Required Oil Seed Production Targets (DH+S Estimates) (mt) 1986 - 1990

OIL SEED	1986	1987	1988	1989	1990
Sunflower	98,440	103,180	105,345	109,045	116,995
Soyabeans	20,670	21,388	22,129	22,905	24,576
Cotton Seed	21,969	22,725	23,512	24,337	26,112
Groundnuts	3,700	3,826	3,856	4,100	4,397
Total	144,779	151,119	154,842	160,387	172,080

1. Based on our estimates of demand for edible oil given in table 7.10 later.

2. Assumption: sunflower seed will contribute 70% of the total edible oil, soyabeans and cotton seed will contribute 12.5% each and groundnuts will contribute about 5%.

7.3 DOMESTIC CRUSHING AND REFINING CAPACITY

During our survey of the processing industry, processors, planners and donor agencies were asked to indicate plans for future expansion in this sector. Apart from ROP Lusaka and the small scale processors no other large scale or medium scale operations are comtemplated. Appendix II shows a breakdown of existing and planned crushing capacity. All expansion programmes were taken into account for the given projections. Oil extraction from maize germ is being planned by Jama Milling of Kitwe but the current economic situation may render their project unviable. This extraction capacity is, therefore, not included in our projections.

Given the expansion of the oil processing industry, the amount of oil seeds that can be crushed at different utilisation levels is given in table 7.7. The projected crushing capacity for each oil seed is based on the figures given in table 7.2.

A comparison of the available crushing capacity with the projected oil seed production (given in table 7.4), is given in table 7.8. From table 7.8 it can be seen that the projected sunflower and soyabeans production can be processed with the existing crushing capacity by increasing the actual utilisation levels to 50% and 70% of planned capacity respectively. This can be done by improving the productivity of the existing crushing plants through better maintenance schedules and a good supply of spare parts. After the new ROP desolventiser is installed, the soyabeans will only utilise 25% of planned capacity.

The existing crushing capacity for cotton seed and groundnuts is insufficient to crush the projected output. If the production trend continues as projected, additional crushing capacity would be needed.

The processors would have to operate at almost full capacity, (over 90%), of planned capacity to process enough edible oil to meet National demand except for soyabeans which could operate at 40% of planned capacity after 1988. This is not considered possible. If the oil seed production was to increase according to table 7.6, to the levels needed to meet national demand, additional processing capacity would be required for all the oil seed crops except soyabeans.

From table 7.9, it can be seen that the total projected oil seed production can be processed with the existing crushing capacity by increasing the actual utilisation rates to around 60% of planned capacity. This can be done by improving the productivity of the existing crushing plants through better maintenance schedules and a good supply of spare parts. The present utilisation rates for ROP plants are on average about 40% of planned capacity. ROP management consider that the 60% utilisation rates are achievable if the constraints discussed in section 4 can be overcome.

Table 7.7

Available Planned Crushing Capacity by Type of Oil Seed (mt), (1985 - 1990)

OIL SEED	UTILISATION %	1986	1987	1988	1989	1990
Sunflower	100	112,648	113,750	115,012	116,196	117,274
	90	101,383	102,375	103,511	104,576	105,547
	80	90,118	91,000	92,010	92,957	93,819
	70	78,854	79,625	80,508	81,337	82,092
	60	67,589	68,250	69,007	69,718	70,364
	50	56,324	56,875	57,506	58,098	58,637
Soyabeans	100	20,700	20,700	70,700	70,700	70,700
	90	18,630	18,630	63,630	63,630	63,630
	80	16,560	16,560	56,560	56,560	56,560
	70	14,490	14,490	49,490	49,490	49,490
	60	12,420	12,420	42,420	42,420	42,420
	50	10,350	10,350	35,350	35,350	35,350
Cotton seed	100	24,000	24,000	24,000	24,000	24,000
	90	21,600	21,600	21,600	21,600	21,600
	80	19,200	19,200	19,200	19,200	19,200
	70	16,800	16,800	16,800	16,800	16,800
	60	14,400	14,400	14,400	14,400	14,400
	50	12,000	12,000	12,000	12,000	12,000
Groundnuts	100	4,200	4,200	4,200	4,200	4,200
	90	3,780	3,780	3,780	3,780	3,780
	80	3,360	3,360	3,360	3,360	3,360
	70	2,940	2,940	2,940	2,940	2,940
	60	2,520	2,520	2,520	2,520	2,520
	50	2,100	2,100	2,100	2,100	2,100

Table 7.8

Comparison of Oil Seed Production and Crushing Capacity (mt) (1986 - 1990)

OIL SEED	1986	1987	1988	1989	1990
SUNFLOWER					
Production	36,500	38,500	42,500	46,000	48,500
Utilisation of crushing capacity (50%)	56,324	56,875	57,506	58,098	58,637
Surplus capacity	19,824	18,375	15,006	12,098	10,137
SOYABEANS					
Production	12,300	14,000	15,200	16,400	18,100
Utilisation of crushing capacity 70%	14,490	14,490	49,490	49,490	49,490
Surplus capacity	2,190	490	34,290	33,090	31,390
COTTON SEED					
Production	22,300	25,000	26,800	28,100	30,250
Utilisation of crushing capacity 100%	24,000	24,000	24,000	24,000	24,000
Surplus capacity (Deficit)	1,700	(1,000)	(2,800)	(4,100)	(6,250)
GROUNDNUTS					
Production	14,000	15,200	16,250	17,750	19,100
Utilisation of crushing capacity 100%	4,200	4,200	4,200	4,200	4,200
Surplus capacity (Deficit)	(9,800)	(11,000)	(12,050)	(13,530)	(14,900)

Production figures from Table 7.4

Figures in brackets show shortfall in available Crushing Capacity.

Table 7.9

Projected Crushing and Refining Capacity

YEAR	Oil Seed Production (mt) (1)	Planned Crushing Capacity (mt/year)	Utilisation of Crushing Capacity 50%	60%	80%	90%	Planned Refining Capacity (mt/) (2)
1986	85,100	161,548	80,774	96,928	129,238	145,393	51,000
1987	92,700	162,650	81,325	97,590	130,120	146,385	51,000
1988	100,750	213,912	106,956	128,347	171,129	192,521	51,000
1989	108,250	215,094	107,547	128,056	172,075	193,584	51,000
1990	115,950	216,175	108,087	129,705	172,940	194,557	51,000

(1) Projected production based on our linear extrapolation of past production trends in Table 7.4.

(2) Only ROP, BRR and Southern African Oil Mills have refining capacity.

The current planned refining capacity (table 7.9) is far in excess of the domestically produced crude oil, which is projected to increase from 14,555 mt in 1986 to 18,213 mt in 1990 (table 7.10). The excess refining capacity could thus be used to refine imported crude oil. In the past the refining capacity has been grossly underutilised due to the lack of availability of local and imported crude oil and chemicals. ROP's refineries are in fairly good condition, if wear parts and correct maintenance skills are made available.

7.4 PROJECTED OIL AND SEED CAKE PRODUCTION

7.4.1 Projection for edible oil production

We have used our oil seed production projections to estimate the edible oil production given in table 7.10. Projected edible oil output was calculated for each type of oil seed as the extractable oil content varies from 20% for sunflower, 17% for soyabeans, 16% for cotton seed and 38% for groundnuts. This is unrefined edible oil, but as has already been shown, the refining capacity exists for all this oil to be refined locally if needed. At present there appears to be little preference for refined oil against simply filtered oil, especially in the rural areas.

In table 7.10 it is assumed that all the domestic oil seed production is crushed for oil extraction. According to our estimates in table 7.4 sunflower will continue to be a major oil seed crop contributing around 40% of the total edible oil even without solvent extraction facilities. If solvent extraction is available the percentage of extractable oil from sunflower will increase to 29% and the contribution to total output will increase to over 45%. Soyabeans and cotton seed would contribute around 30%. These percentages could reduce if more groundnuts were crushed for oil and not used for confectionary.

7.4.2 Projections for Seed Cake Production

The seed cake is an important by-product of the oil extraction industry. Table 7.11 shows our production projections of seed cake output from the domestic oil seed production. The cake yield is based on cake content rates shown in section 7.1 These cake contents were given to us by the oil seed processors during our survey. Solvent extraction is not taken into consideration because only ROP Lusaka has this facility, which is often not used due to lack of chemicals, especially hexsane. Solvent extraction is not absolutely essential for oil seed processing, but it allows a higher oil output from pressed cakes and this reduces the oil content in the cake.

The oil content in cake does not affect the quality of the cake or its nutritional value for stockfeed. It does, however, affect its keeping quality, cake with high oil content becomes rancid after 2 - 3 weeks and this may affect its nutritional value in the long run.

Table 7.10

Projected Edible Oil Output Based on Available Crushing Capacity (mt) (1986 - 1990)

OIL SEED	1986	1987	1988	1989	1990
Sunflower (mt) 20% oil	7,300	7,700	8,500	9,200	9,700
Soyabeans (mt) 17% oil	2,091	2,380	2,584	2,788	3,077
Cotton Seed (mt) 16% oil	3,568	3,840	3,840	3,840	3,840
Groundnuts (mt) 38% oil	1,596	1,596	1,596	1,596	1,596
Total Oil Output	14,555	15,516	16,520	17,424	18,213

Source: Derived from our projected oil seed production in table 7.4, at the given oil contents for each oil seed crop and is based on available crushing capacity for each oil seed crop, (given in table 7.7).

In table 7.11 we again assume that all the domestically produced oil seed is crushed for oil and seed cake extraction. Sunflower cake currently constitutes over 40% of the total production. This cake is used for supplement feeding of ranching cattle during winter and the dry season. The soyabean cake when crushed properly and double toasted is used for poultry and dairy feed. Soya bean is probably the most valuable seed cake as it substitutes well for fishmeal and blood meal which have to be imported from South Africa. Cotton seed contains over 40% protein and is used by ranch and poultry farmers. At presnet there is no preference for a particular type of seed cake due to an acute shortage and farmers just buy whatever is available.

7.5 DEMAND FOR EDIBLE OIL AND BY-PRODUCTS

7.5.1 Demand for Edible Oil

The available information on the demand for edible oil and oil seed by-products is ambiguous and scant. The data used is the best estimate derived from existing publications, records from import-export division, Ministry of Marketing and Co-operatives, N. McFarlene's Report on the National Oilseeds Development Programme Study, MAWD Task Force Report, the Hickling, Oilseed Sector Study, the FAO/ADB Report and ROP's information.

These estimates are shown in the table 7.12.

The amount of oil seed required to meet the projected demand for edible oil in table 7.12 MAWD Task Force estimates does not appear to tie in with their oil seed requirement projections given in table 7.5. We are unable to check how they arrived at the oil seed outputs required to become self sufficient in edible oils. These figures have been used in the Fourth National Development Plan but no one at MAWD, Planning Division or NCDP, has been able to assist us with an explanation of how these oil seed requirements were calculated. We have quoted the figures as they appear in the various MAWD published papers and Task Force Report. These figures are given in this report as they are the basis for all the future planning of the oil seed sector in the Fourth National Development Plan. The figures may be correct but we have not been able to reconcile the two estimates.

On the basis of our seed production projections and demand projections there will be a shortfall in local edible oil production of approximately 14,000 mt in the next 5 years. This shortfall could be reduced by increasing the production of oil seeds and crushing capacity in the rural areas.

The future demand for edible oils in Zambia depends on future population growth and per capita consumption. The latter depends on prices and incomes.

Table 7.11

Projected Seed Cake Production 1986 - 1990

OIL SEED	1986	1987	1988	1989	1990
Sunflower (mt) (60% cake)	21,900	23,100	25,500	27,600	29,100
Soyabeans (mt) (67% cake)	8,241	9,380	10,184	10,988	12,127
Cotton Seed (mt) (50% cake)	11,150	12,000	12,000	12,000	12,000
Groundnuts (mt) (58% cake)	2,436	2,436	2,436	2,436	2,436
Total Oil Output	43,727	46,916	50,120	53,024	55,663

Source: Derived from our oil seed production projections in table 7.4, at the given cake content rates and based on the available crushing capacity for each oil seed. (given in table 7.7)..

Table 7.12

Estimates of Demand for Edible Oil (mt) 1986 - 1990

Agency	Estimate of Demand				
	1986	1987	1988	1989	1990
Task Force	26,914	27,846	28,810	29,807	30,859
FAO/ADB	30,300	31,900	33,500	35,600	37,300
ROP	41,600	44,500	47,600	50,900	52,300
World Bank	30,709	32,859	35,159	37,620	39,850
J. Hickling	27,715	29,100	30,555	32,083	-
DH+S, Zambia	28,127	29,091	30,099	31,157	33,428

Source: Task Force Investment Plan, 1985.

FAO/ADB, Oil Seed Development Project, Main Report, 1984.

ROP, Corporate Plan, 1985.

World Bank Policy Options and Strategies for Agricultural Development, 1985.

J. Hickling Management Consultants, November 1984.

As mentioned above a number of organisations have estimated the future demand for edible oils in Zambia. The assumptions used by each of the organisations in table 7.12 are:

(a) MAWD Task Force - the MAWD Planning Division developed population projections for the "Dutch Food Strategy Study". These population statistics (given in Table 7.13) were used by the Task Force. The Task Force assumes a per capita consumption of 3.8 kg per annum and assumes that per capita consumption will not increase during the next five years.

(b) FAO assumptions - The FAO assumes that population will grow at 3.1 per cent per annum, based on the 1969/1980 population census, and that per capita demand will be 4.25 kg in 1984 and will grow by 0.1 kg per annum. (FAO/ADB Oilseeds Development Project).

(c) ROP assumptions - ROP assumes that current demand is 100 metric tonnes per day and will grow at the rate of 7% per annum (Corporate Plan 1985/86 to 1989/1990).

(d) World Bank Assumptions - The World Bank assumes that demand will grow at 7% per annum from the 1978/79 ROP production levels. (Zambia, Policy Options and Strategies for Agricultural Growth).

(e) J. Hickling - J.F. Hickling Management Consultants use the same population figures as the Task Force but assume that the per capita demand will increase at the rate of 1.5 % per annum.

(f) DH+S - Demand projections are based on the total population projections given in table 7.13 and assumes that Zambia's per capita edible oil consumption is the same as the FAO/ADB 4.2 kg (we have no way of estimating our own per capita consumption) and due to the high price increases and low pay increments consumption per capita will remain static.

The population projections are presented in table 7.13. These are based on the 1969 and 1980 censuses and have been made with the following assumptions:

(a) district population growth rates will not decline between 1980 - 2000;

(b) the rate of rural urban migration will not decline;

(c) rural living conditions will not improve significantly.

7.5.2 Demand for By-Products

There appears to be a complete lack of data on the by-products of the oil seed industry. C.S.O. does not have any production or consumption data.
The National cake demand is estimated by FAO to be about 40,000

Table 7.13

Population Projections 1985 - 1990

Year	1985	1986	1987	1988	1989	1990
Urban	3,251,389	3,434,436	4,627,788	3,832,025	4,047,760	4,275,641
Rural	3,445,623	3,491,922	3,538,943	3,586,394	3,634,585	3,683,423
Total	6,697,012	6,926,358	7,166,630	7,418,419	7,682,345	7,959,063

Source: MAWD Taskforce Projections Investment Plan, Oilseeds.

Taken from the Dutch Food Strategy Study.

mt in 1986. The MAWD Task Force Report estimate 1986 demand to be around 65,000 mt. Both sources consider that locally produced cake covers only 30%-35% of the total requirements.

A further indication that cake is in high demand in Zambia is given by the National Milling Company Limited intake of 25,000 mt in 1985, of which 15,000 mt was imported.

7.5.3 Reconciliation of Oil and Seed Cake Data

In table 7.14 we use our expected oil seed production projections to derive total edible oil potential, projected demand, shortfall and seed cake production potential and projected demand. We have used the Task Foce seed cake estimates because we were unable to assess the demand for seed cake ourselves due to a complete lack of data on its utilisation as indicated in the past paragraph. There would also be a shortfall in domestic oil production of about 14,000 mt. All our oil and by-product projections are based on the assumption that all the oil seeds produced would be crushed for oil and seed cake. The actual outputs, therefore, may be much lower than our projections for these products.

7.7 IMPACT OF IMPORTS

The World Bank and the FAO/ADB report estimate that Zambia imports about 18,000 mt of crude oil from the USA and Europe. According to data available the total demand for edible oil is estimated to be around 28,000 mt per annum for 1985. According to our survey Zambia crushed 57,879 mt of oil seeds and produced about 11,500 mt of edible oil in 1985. There was therefore a deficit of 16,500 mt.

In 1985, a total of 89,832 mt of oil seed was produced and only about 65% (57,879 mt) was crushed. If all the production was crushed it would have produced about 14,000 mt. This would have met half the national demand.

The current difference between production and demand is therefore still significant and cannot realistically be met by domestic efforts. There will have to be imports of crude oil to make up some of the shortfall.

The Commercial Farmers Bureau agrees with the above situation but feel that perhaps it is better to "tighten belts" in the short run and encourage local production rather than depend on imports.

CFB further points out that imports of crude oil deprive the local farmers of the seedcake used for stockfeed. The present output of seedcake only meets about one third of the farmers needs. If the production of oil seeds was encouraged this constraint on the livestock sector would be overcome.

CFB and other farmers interviewed consider that one serious impact of crude oil imports on production and marketing of oil

Table 7.14:

Production and Demand for Edible Oil and By-Products 1986 - 1990

Year	Estimated Domestic Production of Oil seeds (mt) (1)	Projected Production of Oil (mt)	Projected National Demand for Vegetable Oil (mt) (3)	Shortfall in local oil Production (mt)	Projected Production of by-product (cake) (mt)	Projected Demand (2)	Difference
1986	85,100	14,555	28,127	13,572	43,727	65,000	21,273
1987	92,700	15,516	29,091	13,575	46,916		
1988	100,750	16,520	30,099	13,579	50,120		
1989	108,250	17,424	32,266	14,842	53,024		
1990	115,950	18,213	33,428	15,215	55,663	66,114	10,451

1. Our production projections for oil seeds produced domestically. The projected production of oil assumes that all the oil seed production will be crushed for oil extraction.

2. MAWD Taskforce estimates.

3. From table 7.12.

seeds is that it reduces the farmers bargaining power with the processor. ROP can rely on imported crude oil and does not have to buy the local produce. As monopoly final buyer they are not obliged to take the farmers costs into consideration.

Also because ROP can rely on imports they do not treat the local producers well. Farmers complain that ROP has occassionally turned down their produce (especially soyabeans) due to lack of crushing capacity. Yet, they argue, ROP continues to refine imported crude at the expense of local produce. This disposal of produce creates uncertainly and discourages large commercial farmers from increasing production.

The other point of contention is that even though ROP does not buy their produce they are not allowed to export the crop.

The over supply situation may change quite drastically with ROP acquiring the new Ross Down desolventiser for soyabeans, which has an installed capacity of 250 mt/day.

CFB is confident that the Export Board will allow their members to export soyabeans directly to neighbouring countries. Zimbabwe has made numerous enquiries about the possibility of importing Zambian soyabeans and are prepared to pay upto K200 per bag.

CFB and Mount Makulu consider that commercial imports of crude oil should be restricted to allow the local farmers to increase production. They consider that the new price incentives announced in 1986 will most certainly encourage more farmers to grow oil seeds. Also the current fertiliser shortage in rural areas will force some farmers to grow sunflower instead of maize. ROP's new high oil price incentives make sunflower a more viable venture for commercial farmers than it used to be in the past. CFB has negotiated a price of K130 per bag with ROP for the 1986/87 output. Although this price is still slightly lower than the CFB's estimated production cost of K137.00 per bag. CFB is optimistic that more farmers will take up sunflower production as the new price is almost twice as much as the GRZ producer price of K70.00 per bag. Also ROP is prepared to pay higher prices for the high oil containing hybrids being developed at Mount Makulu.

Apart from the direct impact on the seed cake, we consider the impact of crude oil imports has on local production to be small in the short run, especially in view of the deficit in local supplies.

SECTION 8 - EVALUATION OF DEVELOPMENT POTENTIAL

SECTION 8

EVALUATION OF DEVELOPMENT POTENTIAL

8.0 INTRODUCTION

Currently there is no clear strategy for the implementation of small scale processing ventures. Donor supported schemes are operating independently without any overall co-ordination of promotional activities.

This section examines the potential for increased development of small-scale and artesanal oil processing in Zambia. We review the following issues:

(a) constraints to expansion of the small-scale sector;

(b) potential for increasing the numbers of small-scale expellers; and

(c) recommendations for utilisation of funds for the development of the small-scale expeller sector.

8.1 MAJOR CONSTRAINTS

8.1.1 Production of Oil Seeds

The national output of oil seeds, including cotton seed, is not sufficient to support an increase in the current processing capacity. Sunflower, which is perhaps the most suited crop for small-scale extraction, is not grown in sufficient quantities to meet current crushing capacity. ROP can crush at least 38,000 mt at 50% utilisation. The new medium scale plants have crushing capacity of 50 mt per day. If this processing capacity were met from current oil seed productions, there would be little if any sunflower surplus for crushing by small scale expellers unless special provision were made. The availability of oil seed, therefore, could be a major constraint to the expansion of the small scale sector. This could be made worse by new price incentives being offered by processors. ROP is offering K130.00 per bag of sunflower plus K2.50 for each oil content percent higher than 35%. This means that those farmers who adopt good management practices and grow the new hybrid sunflower seeds will get a higher income incentive from ROP. The medium scale processors are planning to do the same. Farmers may thus find it more lucrative to sell to the large and medium scale processors as opposed to the small scale ones who may not be able to afford the higher prices. According to our calculations in Appendix IV, the locally manufactured small scale processors are only marginally profitable at K70.00 per bag of sunflower seed. Both the imported and small scale expellers would not yield any profits if seed was purchased at K130 per bag with no increase in the price of the output.

If located in the rural areas the small scale processors hav advantage over the large and medium scale plants and this is tha they are located nearer the seed production centres than th large scale operators and therefore transportation costs ar lower Also it may be advantageous for small scale farmers t crush their own oil seed production for subsistance and sell cak to the livestock farmers in the area. Finally, as mentione before, the presence of a local small scale processor can be a incentive to "garden" production of oil seed where an immediat tangible benefit accrues in the local provision of the oi required by the oil seed grower.

8.1.2 Institutional Support

The lack of a central technical advisory unit to carry ou research and collect information on the suitability of equipmen and to provide training may inhibit potential entrepreneurs fro entering the sub-sector.

There is no information on the equipment suitable for Zambia Importers and sales outlets therefore bring in machines o differing makes, which are bought at the owners risk. Som imported machines are very good but others don't last an replacements of wear parts becomes a major problem and the owner have to modify them incurring large expenses.

The Kumar machine currently being used in Choma appears to b unsuitable for Zambian conditions. The plant has only been i operation for the past two years and already it has run int spare parts and maintenance problems. ECU do not have a local source for spare parts production. They claim that the machine is an old design and spares cannot be manufactured locally. Spare parts from India take a long time to arrive and this keeps the machine out of production for long periods. Some other imported expellers also give problems but it is not known whether this is due to poor maintenance as the local engineering firms cannot service the machines effectively or due to complex factory sealed units not being available locally.

Apart from Pannico in Mufulira there is no reliable source of local equipment and spare parts. Pannico is a new venture and its performance cannot be judged until machine tests have been carried out. Kabwe Regional Research Station has tested only the wear parts and cannot guarantee the machines long term performance.

In most cases the entrepreneur has to write to the manufacturers in various countries, study the brochures, order the equipment, obtain the foreign exchange and import what he considers to be the best machines without any technical assistance. This system often proves a disincentive for individuals who want to go into business but lack the of knowledge or ability to successfully complete this process.

90

Lack of credit facilities is another major constraint. SIDO has received almost 50 applications from organisations and private individuals who want to invest in a small oil seed press. These individuals have the know-how but lack the finance to buy small presses. The commercial banks and DBZ are not usually keen to finance these small scale ventures.

We interviewed some of these potential owners/operators who have approached SIDO. They had the collateral and had done all the research work on manufacturers, but it seems that the bank (DBZ) has not considered their applications for the past four years.

8.1.3 The Cost of Machinery

The decline of the Kwacha against the dollar results in excalating costs of imported machines and raw materials to manufacture machines locally. The Pannico machines for instance were being retailed at K35,000 in October 1986. Although the machine is manufactured locally, the steel is imported at $1,000 per tonne from the Republic of South Africa. The electrical motors, diesel engines and bearings etc. are also imported. In April this year the diesel engine was priced at K18,000 by K.B. Davies. In late October the price had increased to K28,000. This will increase the price of the Pannico machine by 50 - 60% and may cause it to become uneconomical in the long run.

Having reviewed the possible constraints which could hinder the effective development of this sub-sector, we now review the feasibility of expanding the small scale processing capacity.

8.2 EXPANSION OF THE SMALL-SCALE EXPELLER CAPACITY

8.2.1 Introduction

In spite of the constraints discussed earlier in the section. The general concensus of oil seed producers including the CFB and Mount Makulu Research Station and ZCF is that small scale expellers are excellent for the oil processing industry and should be encouraged. They feel that this is one way to overcome the edible oil shortages caused by ROP breakdowns and produce seed cake for the local stockfeed industry.

We carried out a financial analysis of the profitability of two oil seeds expellers, firstly an imported machine and secondly a locally manufactured expeller. Appendix IV shows the analysis for both machines.

Our analysis in Appendix IV shows that the high interest charges, using the current DBZ rate of 28%, make the profitability of both the machines marginal.

As could be expected, the attractiveness of the imported machine is very sensitive to the exchange rate and at a rate of K15 = US $1, the Hander M54 machine looks financially very unattractive.

The local PANNICO machine is more attractive, but it's financial viability is very sensitive to both the price gained for the product and the variable costs of production.

Our calculation suggest that a locally produced machine will be financially preferable. However, the current interest rates applicable in Zambia could be a major disincentive to investment in small scale expellers.

A major point in favour of small-scale crushers is that they consume relatively small amounts of oil seed in comparison to medium and large scale crushers and the benefit accrues to the local community in terms of the provision of essential commodities, increased employment and incomes in the rural areas.

8.2.3 Areas with Oil Seed Processing Potential

As a result of our field investigations and with the help of SIDO we have identified areas with oil seed production and processing potential.

SIDO has received over 50 applications for assistance with small scale expellers from all over Zambia. Of these applications SIDO has actually carried out 40 feasibility studies and found at least 50% of the projects to be viable. SIDO would not release their studies due to their confidentiality. They did, however, release their list of Oil Extraction Projects as of 4 September 1986. All the 40 promoters on this list were contacted for information on their projects in their respective areas. The response was good and 25 replies were received. The areas with the highest potential were visited and promotors interviewed. Table 8.1 shows the list of applicants who responded to our enquiries and their location in Zambia.

Sunflower is considered to be the best crop for small scale oil expellers because it is very easy to process in comparison with soyabeans, which needs toasting and has low oil content, and cotton seed, which requires delinting and chemical processing.

All the promoters who responded to our request for information intend to use sunflower grown in their areas.

Due to their high sunflower seed output Kafue and Mumbwa are two centres which have the potential to support a small oil expeller on the basis of the level of oil seed production and the availability of a ready market for edible oils.

We look at the potential for small scale production in these particular areas before looking at the potential in each of the provinces in Zambia.

92

Kafue

Oil seed production	=	2,800 mt sunflower, (source: PCU)
Estimated population	=	200,000, (source: CSO)
Estimated demand for edible oil per capita consumption of 3.5 kg per annum	=	700 mt

The locally produced oil seed would be able to meet at least 80% of the Kafue demand (at 20% extraction).

The promotor does not know what machines to import and SIDO based their study on a small Indian machine.

Mumbwa

Oil seed production	=	4,000 mt, (source: PCU depot)
Estimated population	=	188,000, (source CSO)
Estimated total demand	=	658 mt
Estimated output from locally grown oil seed (at 20% extraction)	=	800 mt

There would be surplus for sale in Western Province which is an oil seed and edible oil deficit area.

The promoter wants to buy a machine from Hander Oil Machinery Corporation, Osaka, Japan. The promoters are all established businessmen and have raised the collateral for financing the project. They are waiting for DBZ approval of their loan.

Eastern Province

Eastern Province produced about 8,000 mt of sunflower in the 1985/86 harvest season. All of this was used by the ECU plant in Katete. There is thus very little surplus oilseed for small-scale expellers. ECU appears to be meeting adequately the Eastern Province oil demand of about 2,000 mt quite. Perhaps if the oil seed output increases, especially in rural areas like Lundazi and Chadiza, it would be beneficial to install new processors as the ECU Katete Plant does not intend to increase its processing capacity. Also the current Katete edible oil production is dropping due to management and spare part problems.

Southern Province

The Southern Province will produce about 7,000 mt of sunflower in 1986. 3,000 of this is used by ZATCO, the rest is sold to ROP Lusaka. There is obviously a possibility of using this production for small-scale expellers at the expense of a reduced supply to ROP. Mazabuka small-scale expellers use about 1,000 mt and this would leave about 4,000 mt for small scale expellers such as a Hander CeCoCo in Monze or Kalomo. The market for the oil is already there along the line of rail and surrounding rural areas. The cake would be used for cattle as Southern Province has one of the highest cattle populations in Zambia.

Central Province

Central Province is the largest sunflower producer with an output of over 8,000 mt. Most of Central Province production is currently sold to ROP Lusaka and about 1,500 mt to Zamoil in Luanshya. Some of the production from Mkushi and Serenje is used by the small-scale expellers in that area. Some sunflower could be utilised by small scale expellers but this would be at the expense of supplies to ROP. ROP Lusaka needs about 40,000 mt of sunflower, to operate at 50% of rated capacity, and this can only be supplied by the surplus producing provinces such as Central, Lusaka and Southern. The sunflower seed processors in Lusaka alone, including ROP, will need at least 50,000 mt of sunflower seed to stay operational.

The availability of sunflowers, which is the best crop for small scale expellers, is therefore a major constraint to the expansion of the industry in Central Province. The market for the refined oil and seed cake exists but the oilseed would not be available. The only option would be to divert some of ROP's requirements and for ROP to concentrate on other oil seeds, like soyabeans and cotton.

Luapula Province

Luapula Province on the whole produces an average 50 mt of sunflower per annum. They already have two small scale expellers which are operating at 40% capacity due to lack of oilseeds and, therefore, there is no need for further processing capacity in the near future.

Northern Province

Northern Province too has very little oilseed production, 125 mt of sunflower. They already have small scale expellers in Mpika and Chinsali and do not have sufficient sunflower or other oilseeds to justify another one.

North Western Province

North Western Province has a total output of 75 mt of sunflower and 157 mt of soyabeans. The North Western Co-operative Union already has two Komet double spindle expellers. The current oilseed production, therefore, does not justify more expellers in this area. Kabompo have a small hand operated Komet and the IRDP Co-ordinator said they do not have enough seed to operate more than 15 days per month. Unless the production improves drastically another expeller cannot not be justified.

Western Province

Western Province marketed 25 mt of sunflower in 1985. This was used for the small Dutch expeller (name not known), which requires 50 mt per year to operate at full capacity. Therefore, another expeller would not be viable with the current oil seed output.

Supply of oil seeds is a major constraint to the expansion of this sub-sector. If this was overcome the demand for edible oil in these areas would justify the existance of small scale expellers provided the maintenance backup facilities are there to service the machines regularly.

8.3 FINANCIAL SUPPORT TO THE SMALL SCALE SUB SECTOR

After reviewing the constraints and possible potential of this sub-sector, we now examine ways and means of strengthening this sector using local and foreign funds.

As seen earlier in the section the major constraints to the development of small scale and artesanal oil expellers are:

(a) organisational and institutional support, which includes lack of research and co-ordination of the sectors development and non availability of small scale expellers;

(b) limited access to credit facilities;

(c) unavailability of oilseed for processing;

(d) lack of financial resources to provide back-up services for the small scale processing sector.

All the above areas have weak structures and could be given support through the provision of adequate funds.

8.3.1 Organisational and Institutional Support

The Government, through the Ministry of Agriculture and Water Development, needs to develop specific policies for the development of this subsector. An in-depth economic appraisal of all small scale and artesanal oil expellers is the first step needed to determine which type/make of expeller is most appropriate for the various types of oilseeds and regions of Zambia. Mr. Swetman has already done some research in this area but a lot more is needed before definite conclusions can be drawn on regional and oilseed suitability.

Also GRZ needs, in conjunction with aid agencies, to develop a strategy for long term insitutional support to the sector which should include extension and training in the operation and maintenance of small scale expellers.

8.3.2 Research and Co-ordination

A planned strategy for development of various small scale processing schemes should be monitored by a central Zambian organisation which can guide and monitor the local development of this sub sector. Among other things, this organisation would be responsible for initiating support to local manufacturing industry to promote the manufacture of spare parts and, as in the case of Pannico, whole machines.

The above organisation would also be responsible for research to ascertain the optimum pre-processing procedures such as decortication and/or heating of oilseeds, type of treatment before and after crushing for higher oil yields and good cake quality. The results of these experiments should be made available to the small scale processors and manufacturers on a regular basis to improve the efficiency of the sub-sector.

This may already have been done in other countries, in which case this information should be brought into Zambia and modified to take into consideration local conditions. For instance, the composite sunflower seed currently grown in Zambia, is thought to be more abrasive than those used in Zimbabwe and South Africa. The new hybrid varieties are thought to be less abrassive, and would affect the wear of machine parts differently. This would therefore affect the rate of wear on the machine parts. The machine fabrication materials (steel) available and used in Zambia is also different from the materials used in such as Zimbabwe. The locally available steel is not "hardened" and apparently wears faster. There is therefore the requirement to tailor the results of similar research and other countries to the needs of Zambia.

Research of this nature is essential to optimise utilisation of available resources. For example, the small-scale oil seed processors crush sunflower directly from the bags packed by farmers. This causes excessive wear on the machines because there is a lot of grit and sand in the bags. Tony Swetman tried

96

to reduce the wear on the machines by removing the grit from the seeds. He sieved the sunflower to remove large stones and then washed the sunflower in shallow water prior to crushing. This simple operation has reduced the wear on the machine by over 50%. Although this has been done very few processors are using this technique because they had not heard of it, as there is no channel for information dissemination.

Research should also be carried out into ways of utilisation of seed debris for household fuel. ROP have over 90 tonnes per day of "foots" which are dumped in the outlying areas of Lusaka. They have a pelletising machine but do not know the acceptability of using these husk pallets for household fuel. It could prove to be a cheap charcoal substitute.

GRZ/aid agencies should also encourage further research into the new high oil hybrids. There should be some work to determine what percentage of husk/fibre needs to be present for optimum yield of oil in terms of expeller work and what processing procedure is best for each oilseed crop. This could lead to suitable designs of low cost equipment which could be manufactured locally.

8.3.3 Limited Access to Credit

As mentioned earlier, most of the current oil seeds projects, such as those of the FAO/ADB, are providing assistance to ROP to improve their productivity. ROP bids for its own expansion programme funds through the auctioning system and also receives technical and financial assistance through bilateral aid. The African Development Bank is also considering further financial assistance to ROP to increase their crushing capacity.

The medium scale processing capacity has financial backing from the commercial banking system as they have adequate security. The small scale entrepreneur does not often have the collateral and, as SIDO pointed out, DBZ and other banks consider them a high risk investment. The bank loans officers usually give investigation priority to large projects at the cost of these small ones. Also a lot of these projects are based in remote areas and bank personnel are reluctant to go into these areas for evaluation.

This would be another area where USAID/other donors could invest in a revolving fund to assist the small entrepreneur. SIDO has the know-how to evaluate projects but their promotional effort is defeated by lack of funds. AID funds could be used to finance small scale expellers at low interest rates. Individual processor ventures could then be profitable and the funds will therefore be available for the repayment of loans. If the entrepreneurs default, the expeller itself can be repossessed and sold or given on loan to someone else.

Further work would be needed to set up an effective funding system through one of the financial institutions.

[illegible] Increased Oil Seed Production

There is an obvious advantage to oil seeds being processed and consumed within the areas of production. This saves on marketing costs and provides higher income and employment for the rural population. The increased employment in rural areas can also contribute towards the halt in rural - urban migration.

There is therefore an advantage in promoting essential small scale industries in the rural areas. Local monies could be used for promotional campaigns in rural areas to promote the production of oilseeds for local expellers. In this situation the farmer has a visual understanding of what happens to his crop. The oil seed may become like maize, grown for the market and home consumption. This was pointed out by the General Manager of LINTCO, Mr. Mantanyani. He gave the Lonrho ginnery in Mumbwa as a good example of such a situation. Farmers grew cotton seed but did not know what it was used for. With the ginnery, they can see their cotton seed being processed within their area. Mr. Mantanyani considers this factor alone will contribute a great deal to increased cotton seed production in the Mumbwa area.

8.3.5 Lack of Maintenance Back-Up

The effectiveness of existing supply and support agencies, especially with regards to their methods of equipment selection, ordering and importation needs to be consolidated. Machinery is being imported but the spare parts back-up is lacking. In our survey we found that the spare parts are not available on a regular off-the-shelf basis or the imported small scale expellers. Most operators, therefore, resort to using modified locally manufactured parts. During our site visits, we found a number of machines to be unoperational due to lack of readily available spare parts in the market. For instance, the owners of the machines at Nakambala Sugar Estates do not have the time to come to Lusaka and go from "door to door" to check if the worm shaft can be made locally. However, other similar machines in Zambia do not have the same problem because they have identified a reliable manufacturer for their spare parts. There is a general problem in that spare parts have to be saught out and this can take up to one week to locate a firm which will agree to making a worm shaft out of their production line. It can further take up to 3-4 weeks to have the parts made, as each part has to be fabricated individually.

If the machines in the country could be standardised, their spare parts could be made regularly as the demand would justify regular production.

Again, aid agencies can help to establish which are the the most suitable makes of machines for Zambia. The local industry could be encouraged to design and manufacture small presses, as Pannico has done in Mufulira. A limited number of local manufacturers with the potential to meet the increased demand were assessed. It was found that the local engineering industry is indeed very

innovative and has the ability to deal with the expansion of this sub sector. They are more than willing to take up the challenge if the raw material constraint can be overcome, but the limited resources available would be best concentrated on limited makes of machines best suited to the country.

In the past many well intentioned projects failed due to lack of back-up facilities. To avoid this, simple machines with locally available spare parts should be encouraged. A small training centre could be set up to educate operators and machine and spare parts manufacturers in the proper use of the machines.

Although we have identified as part of this exercise the general areas where funds could be used to support this sector, further in-depth reviews of each possibility are necessary to establish a self sustaining and successful operation.

Table 8.1

List of Applicants for Oil Extraction Projects

Project Name	Location	Installed Capacity of intended expeller mt/day	Status of Project with DBZ
Mfula Oil Mills	Lusaka	1.5	Approved through DBZ Small Scale Enterprises Promotion Limited Division
Kasweka Seedoil	"	3.5	Status not available
Mafuta Industries	"	2.5	Not Available
Oil Extractors Limited	Kafue	3.5	Under consideration
Chongwe Agric.	Chongwe	3.5	File Closed
Intwilo Oil Products	Mumbwa	1	Under Consideration
Oil Extraction Co.	ZAF Mumbwa	N/A	Not Available
Shalubwa Oil Mill	Mumbwa	0.3	Rejected
Cooking Oil Crusher	Kabwe	15	"
Lubinda Oil Mills	Kapiri Mposhi	1.5	"
Cooking Oil Manufacturers	Kapiri Mposhi	1.5	Under Consideration
Lake Oil Industries	Mufulira	0.3	" "
Malama Chinema Co.	Chipata	N/A	Rejected
Katuta Oil Plant	Petauke	1.5	Under Consideration
Kalensha Chimputa	Kasama	14	Rejected
Oil Extraction	Mansa	N/A	N/A
Lungu Oil Mill	Mbala	0.5	File Closed
Oil Extraction	Mpulungu	N/A	" "
Oil Extraction	Chinsali	N/A	" "
Chisakula Industries	Nchelenge	1.4	Under Consideration
KLB & Company	Mazabuka	1.5	File Closed
Nunu Enterprises	Monze	0.5	Under Consideration
Siavonga Oils	Siavonga	27	" "
Munkuye Enterprises	Kaoma	N/A	File Closed
Nchele Co-operative Society ,M M,	Monze	0.5	Rejected

APPENDICES

APPENDIX I

APPENDIX I

PRELIMINARY BUDGET COSTS

REPORT PARA REF.	DESCRIPTION	ROP OPERATING BUDGET	CAPITAL COSTS LOCAL (K)	FOREX	EQUIVALENT (K)
4.0	Safety and clean-up	✓	NIL	R 1 000	3 000
5.2	Water treatment plants	✓	K 10 000	R 48 000	154 000
5.3	Cooling water pumps	✓	K 1 000	EXPENDED	1 000
5.4	Cooling towers	✓	K 43 000	R 74 000	265 000
6.2	Boiler plant roof	✓	NIL	NIL	NIL
6.3	Standby coal feeder conveyor	✓	K 10 000	£ 1 500 R 1 000	19 750
6.4	Afripak Boilers			R 44 000	142 000
7.2	New ZESCO feeder		K 20 000	NIL	20 000
7.3	Electrical Distribution		K160 000	£ 94 000	1 147 000
7.4	Replacement 11kV feeder		K 20 000	£ 2 000	41 000
7.5	Re-routing power supply to boilers		K 80 000	£ 35 000	447 500
8.3	Hulls disposal system		K 43 000	SF220 000 £ 5 000 R 3 000	874 500
8.4	Expeller modifications	✓	NIL	£ 30 000	315 000
8.5	Additional destoner	✓	K 3 000	EXPENDED	3 000
8.6) 8.7)	Additional drag link conveyors	✓	K 56 500	SF 70 000	301 500
8.8	Flooding of conveyor pits		K 3 500	£ 3 000	35 000
9.2	Vent recovery system	✓	K 4 500	£ 15 000	162 000
9.4	Revoilex baskets	✓	NIL	£ 2 500	26 250
9.5	Relocation of SX LCR	✓	K 5 000	£ 8 000	89 000
10.2) 11.4)	Krupp heat exchangers	✓	NIL	DM 20 600	61 800
10.3	Westfalia pumps	✓	K 15 000	£ 10 500	125 250
11.2	Refinery vacuum pumps	✓	K 35 000	£ 12 000	161 000
11.3	Deodoriser Aftercooler	✓	NIL	DM 35 000	105 000
11.5	Steam raising plant	✓	NIL	£ 10 000	105 000
12.2	Refrigeration compressors	✓	K 8 000	£ 15 000	165 500
12.3	Chiller unit pump	✓	NIL	£ 3 000	31 500
12.4	Standby generator	✓	K 30 000	£ 20 000	240 000
13.2/3/4	Instrumentation	✓	K 4 500	£ 81 000	855 000
14.2	Packaging storage		K108 000	R 11 500	142 500
14.3	Cake storage building		K130 000	R 20 000	190 000
14.4	Saladi bottling storage		K160 000	R 7 000 £ 7 500	259 750
	TOTAL				6 488 800
	Packing, Freight, Insurance and IDST				3 400 000
	GRAND TOTAL				9 888 800

Source: ROP, Lusaka

ROP (1975) LIMITED
LUSAKA WORKS
SUMMARY BAR CHART

▼ FOREX
I INSTRUMENT CONTRACTS
C CIVIL CONTRACTS
M MECHANICAL CONTRACTS
E ELECTRICAL CONTRACTS

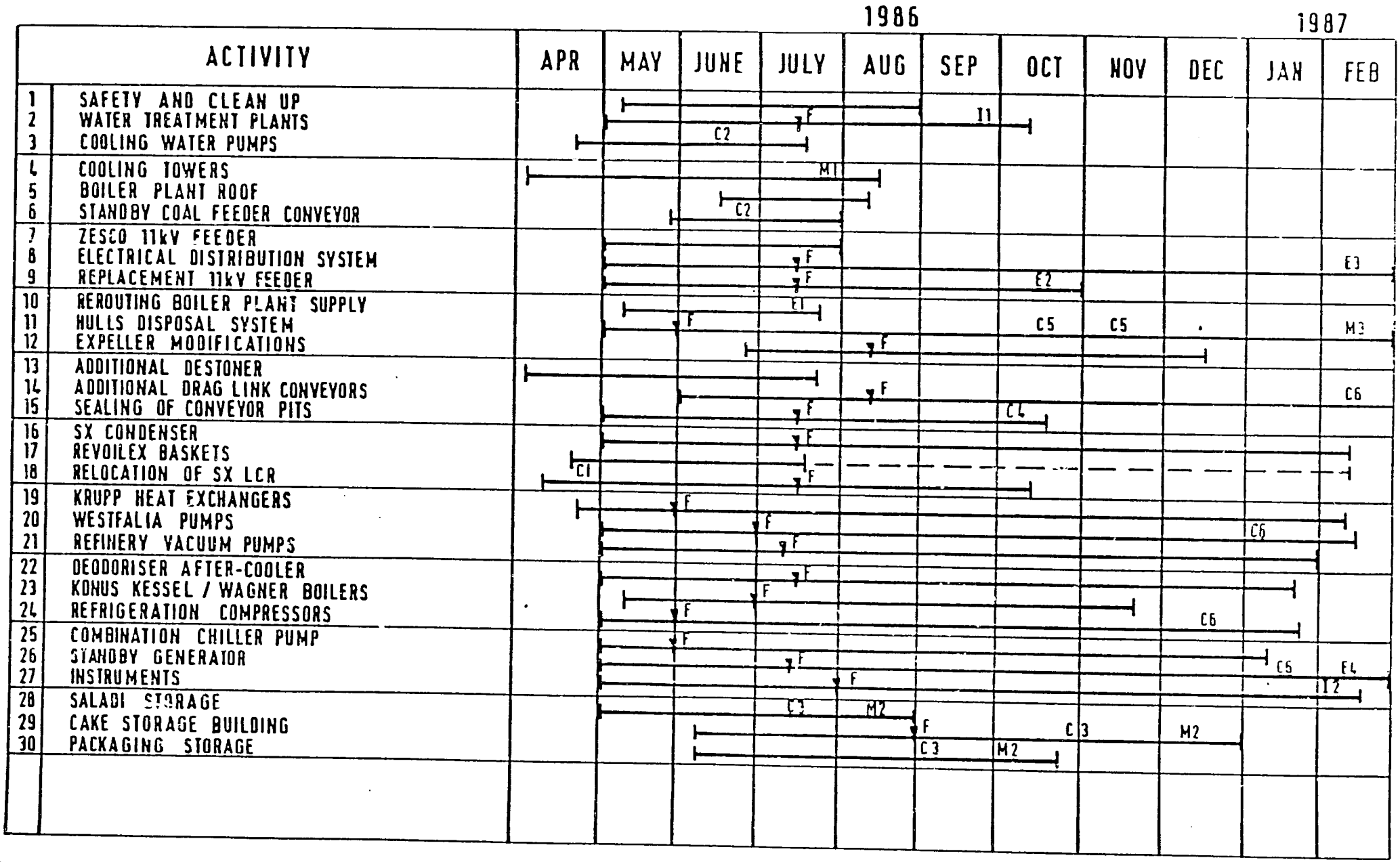

Source: ROP, Lusaka

104

APPENDIX II

APPENDIX II

NATIONAL OIL SEED PROCESSING CAPACITY FROM 1983 1987 - 1990 ARE PROJECTIONS

ACTUAL AND PROJECTED CRUSHING CAPACITY OF DOMESTIC PROCESSORS BY OIL SEED TYPE FROM 1983-1990 (IN METRIC TONNES PER ANNUM)

Oil seed	ROP	BRR	ECU	Southern African Oil mills	ZATCO Stockfeeds	SAMEER	ROBINHOOD	ZAMOIL	SMALL SCALE 280 day/yr and 8hrs/day 180kg/hr	60kg	50kg	30kg	12.5kg	Actual or planned Total or Rated Crushing Capacity (mt)
1983														
Sunflower	76,160	-	-	-	3,000	-	3,000	2,800	432	288	240	216	90	86,226
Soyabeans	14,400	-	-	-	1,500	-	-	-	-	-	-	-	-	15,900
Cotton Seed	6,000	-	-	-	-	-	-	-	-	-	-	-	-	6,000
G/nuts	-	-	-	-	-	-	-	4,200	-	-	-	-	-	4,200
	96,560				4,500		3,000	7,000	432	288	240	216	90	112,326
1984														
Sunflower	76,160	-	-	-	3,000	-	3,000	2,800	432	288	480	360	90	86,226
Soyabeans	14,400	-	-	-	1,500	-	-	-	-	-	-	-	-	15,900
Cotton Seed	6,000	-	-	-	-	-	-	-	-	-	-	-	-	6,000
G/nuts	-	-	-	-	-	-	-	4,200	-	-	-	-	-	4,200
	96,560				4,500		3,000	7,000	432	288	480	360	90	112,710
1985														
Sunflower	76,160	-	12,000	-	3,000	-	3,000	2,800	432	288	600	648	90	99,018
Soyabeans	19,200	-	-	-	1,500	-	-	-	-	-	-	-	-	20,700
Cotton Seed	12,000	12,000	-	-	-	-	-	-	-	-	-	-	-	24,000
G/nuts	-	-	-	-	-	-	-	4,200	-	-	-	-	-	4,200
	107,360	12,000	12,000		4,500		3,000	7,000	432	288	600	648	90	147,918
1986														
Sunflower	76,160	-	12,000	8,400	3,000	4,000	3,000	2,800	432	288	1,800	648	120	112,648
Soyabeans	19,200	-	-	-	1,500	-	-	-	-	-	-	-	-	20,700
Cotton Seed	12,000	12,000	-	-	-	-	-	-	-	-	-	-	-	24,000
G/nuts	-	-	-	-	-	-	-	4,200	-	-	-	-	-	4,200
	107,360	12,000	12,000	8,400	4,500	4,000	3,000	7,000	432	288	1,800	648	120	161,548
1987														
Sunflower	76,160	-	12,000	8,400	3,000	4,000	3,000	2,800	432	288	2,800	720	150	113,750
Soyabeans	19,200	-	-	-	1,500	-	-	-	-	-	-	-	-	20,700
Cotton Seed	12,000	12,000	-	-	-	-	-	-	-	-	-	-	-	24,000
G/nuts	-	-	-	-	-	-	-	4,200	-	-	-	-	-	4,200
	107,360	12,000	12,000	8,400	4,500	4,000	3,000	7,000	432	288	2,800	720	150	162,650

Oil seed	ROP	BRR	ECU	Southern African Oil mills	ZATCO Stockfeeds	SAMEAR	ROBINHOOD	ZAMOIL	SMALL SCALE 280 day/yr and 8hrs/day 180kg/hr	60kg	50kg	30kg	12.5kg	Actual or planned Total or Rated Crushing Capacity (mt)
1988														
Sunflower	76,160	-	12,000	8,400	3,000	4,000	3,000	2,800	432	288	3,960	792	180	115,012
Soyabeans	69,200	-	-	-	1,500	-	-	-	-	-	-	-	-	70,700
Cotton Seed	12,000	12,000	-	-	-	-	-	-	-	-	-	-	-	24,000
G/nuts	-	-	-	-	-	-	-	4,200	-	-	-	-	-	4,200
	157,360	12,000	12,000	8,400	4,500	4,000	3,000	7,000	432	288	3,960	792	180	213,912
1989														
Sunflower	76,160	-	12,000	8,400	3,000	4,000	3,000	2,800	432	288	5,040	864	210	116,194
Soyabeans	69,200	-	-	-	1,500	-	-	-	-	-	-	-	-	70,700
Cotton Seed	12,000	12,000	-	-	-	-	-	-	-	-	-	-	-	24,000
G/nuts	-	-	-	-	-	-	-	4,200	-	-	-	-	-	4,200
	167,360	12,000	12,000	8,400	4,500	4,000	3,000	7,000	432	288	5,040	864	210	215,094
1990														
Sunflower	76,160	-	12,000	8,400	3,000	4,000	3,000	2,800	432	288	6,120	864	210	117,274
Soyabeans	69,200	-	-	-	1,500	-	-	-	-	-	-	-	-	70,700
Cotton Seed	12,000	12,000	-	-	-	-	-	-	-	-	-	-	-	24,000
G/nuts	-	-	-	-	-	-	-	4,200	-	-	-	-	-	4,200
	167,360	12,000	12,000	8,400	4,500	4,000	3,000	7,000	432	288	6,120	864	210	216,174

APPENDIX III

APPENDIX III

INVENTORY OF THE EXISTING SMALL SCALE OIL PROCESSORS IN OPERATION IN ZAMBIA

Province	District/Town	Make of Expeller	Motive Power	Extraction Rates Installed Kg/hr	Extraction Rates Utilised Kg/hr	Type of Inputs Used	Type of Inputs Alternative	Organisation
CENTRAL	Serenje	Simon-Rosedown Mini-40	Diesel engine driven	50	40	Sunflower	Soyabeans	Mulilima MPCS
	Kabwe	" " "	Electric motor driven	50	40	"	"	Kabwe Regional Research Station
	Mkushi	Pannico		50	40	"	"	Farmer
	Serenje	Montford-Reiners "Komet" BD85		50	40	"	"	District Council
	Kapiri Mposhi	Montford-Reiners "Komet"BD85		50	40	"	"	Cooperative Union
COPPERBELT	Mufulira	Pannico		50	40	"	"	Farmer
	Kitwe	Maxoil Scooples (KRUPPS)		50	40	"	"	CPC
	Kalulushi	Pannico		50	40	"	"	Farmer
LUSAKA	Chilanga	CeCoCo Hander Type 54	Electric motor driven	180	120	"	"	Business
	Chilanga	CeCoCo Hander Type M	" " "	60	48	"	"	Business
	Lusaka	Simon-Rosedown Mini-40	" " "	50	40	"	"	"
	Lusaka	China Import-Export Corporation	" " "	50	40	"	"	"
	Lusaka	Montford-Reiners "Komet" BD85	" " "	30	22	"	"	"
	Lusaka	Montford-Reiners "Komet" BD85	Diesel engine driven	30	22	"	"	"
	Lusaka - west	Montford-Reiners "Komet" BD85	Electric motor driven	30	22	"	"	"
	Lusaka - east	KIT Hydraulic Pres	Manual operatior	12.5	11	"	"	Christian mission
NORTHERN	Chinsali	Simon-Rosedown Mini-40	Diesel engine driven	50	40	"	"	Lombe MPCS Co-operative Society at Kaso
	Mpika	Simon-Rosedown Mini-40	Electric motor driven	50	40	"	"	Lwitikila MPCS Co-operative Society
	Mpika	Montford-Reiners "Komet"BD85	" " "	30	20	"	"	Mission
	Mpika	Montford-Reiners "Komet" BD85	" " "	30	20	"	"	IRDP
	Mbala	Montford-Reiners "Komet" BD85	" " "	30	20	"	"	Mission
SOUTHERN	Chisekesi	CeCoCo Hander	Electric motor driven	60	48	"	"	Mission
	Chikankata	Simon-Rosedown Mini-40	" " "	50	40	"	"	School
	Mazabuka	Simon-Rosedown Mini-40	" " "	50	40	"	"	Estates
	Mazabuka	Simon-Rosedown Mini-40	" " "	50	40	"	"	Farmer
	Mazabuka	Pannico		50	40	"	"	Estate
	Kaleya	Penchi Works Model ZYB78		40	30	"	"	Business
	Sinajola	KIT Hand-operated	Manual operation	12.5	11	"	"	IRDP
	Siabaswe	KIT Hand-operated	" "	12.5	11	"	"	GTZ
	Kalomo	HANDER TYPE 54	Electric operated	180	120	"	"	Business

Province	District/Town	Make of Expeller	Motive Power	Extraction Rates Installed Kg/hr	Utilised Kg/hr	Type of Inputs Used	Alternative	Organisation
WESTERN	Kaoma	KIT Hydraulic Press	Manual hydraulic Press	12.5	11	"	"	Dutch
NORTH WESTERN	Solwezi	Pannico		50	40	"	"	Farmer
	Kabompo	Montford-Keiner "Komet" BD85	Double-Spindle Press	30	22	"	"	PCU

APPENDIX IV

APPENDIX IV

FINANCIAL ANALYSIS OF SMALL SCALE EXPELLERS

In this appendix we evaluate the financial viability of an imported expeller and a locally constructed expeller.

Imported Expeller Hander M54

Table 4.1 shows the cost of plant and machinery, including premises and storage facilities. The costs have been calculated using rates of exchange of K10 = US $1 and K15 = US $1.

Table 4.2 sets out the assumptions regarding expected production, sale revenues and costs. All costs are our best estimates based on the experience gained in our field trips.

Table 4.3 shows the projected profits from the small scale expeller from 1986 to 1995. NB taxation has been ignored.

Locally Constructed Expeller - Pannico

Table 4.4 shows the cost of plant and machinery including premises and storage facilities. It should be noted that the locally constructed expeller is not as sophisticated as the imported one.

Table 4.5 sets out the assumptions regarding expected production, sales revenues and costs. All costs are again our best estimates based on the experiences gained in field trips.

Table 4.6 shows the projected profits from the small scale expeller 1986. Again taxation has been ignored.

Table 4.7 shows the various breakeven points for the economic viability of the project.

Table IV.I

Plant and Machinery Costs

Hander M54

	October 1986	
	Local Currency (Kwacha)	Foreign Exchange (US $)
Decorticator		5,530
Seed Scorcher		5,450
Seed Crusher		4,360
Oil Expeller		7,360
Filter Press		3,730
Premises and storage facilities	25,000	
	25,000	26,430
Freight costs	3,450	
Duty at 15%		3,965
	28,450	30,395
Installation costs	23,100	-
	K51,550	$30,395

Total Kwacha Cost assuming exchange rates of:

(a) K10 = US $1 is K355,500

(b) K15 = US $1 is K507,475

Source : SIDO; Hander Oil Machinery Corporation of Japan and Pasi Construction Limited.

Table IV.II

Assumptions

1. Operating Capacity

The initial operating capacity of the machinery is:

(a) 810 kg of oilseed per day (planned capacity) 226,800 kg in first operating year.

(b) 280 days per annum (planned year), and

We also assume that production will reduce gradually in the first five years of production to 75% of the initial operating capacity. This is due to the general wear and tear and deterioration of the machinery that will take place. We also assume that the life of the machinery is 10 years.

2. Sales Revenue:

The annual mix of production output for sunflower is:

20% oil
20% hulls
60% cake

Source: ROP 1975 Limited

Sales prices of those outputs are:

Oil : K7.50 per litre (9.37 per kg)
Hulls : no value
Cake : K700 per tonne (K0.70 per kg)

Source: Ministry of Agriculture and Water Development, Planning Division.

Therefore, for a standard 1kg input, the production and sales proceeds are as follows:

Production	Sales Proceeds
0.2 kg oil	K1.87
0.2 kg hulls	-
0.6 kg cake	K0.42
1.0 kg	K2.29

Sales prices are expected to rise annually by 10%.

114

3. Variable Costs

(a) Inputs: Oilseeds K70 per 50 kg bag;

(b) Transport Costs of Inputs at K 2 per 50 kg bag

Variable cost per kg are therefore K1.44.

4. Annual Fixed Costs

(a) Labour:

	K
Depot Manager	6,000
Machine Operator	4,000
Semi skilled workers	5,000
	15,000

(b) Utilities, repairs and administration. 18,000

(c) Depreciation of machinery (10% of total machinery cost).

(d) Interest, 28%, current DBZ rate.

(e) Kwacha denominated loan for capital equipment repaid over 10 years.

(f) Initial bank overdraft of K50,000, at 28% interest, taken to cover working capital requirements.

(g) Taxation not allowed for.

(h) No drawing from profits by owner allowed for.

N.B. All costs have been estimated and are based on our experience in the oil seed sector. We assume that these costs will rise at 10% per annum with the exception of depreciation and interest.

Table IV.III

Projected Profits from Small Scale Expeller 1986 - 1995

	1986	1987	1988	1989	1990	1991	1992	1993	1994	1995
Inputs (kg)	226,800	212,625	198,450	184,275	170,100	170,100	170,100	170,100	170,100	170,100
Sales Revenue per kg of input	K2.29	K2.52	K2.77	K3.05	K3.35	K3.68	K4.06	K4.46	K4.91	K5.40
Total Sales Revenue	519,372	535,815	549,706	562,039	569,835	625,968	690,606	758,646	835,191	918,540
Variable cost per kg of input	K1.44	K1.58	K1.74	K1.92	K2.11	K2.32	K2.55	K2.81	K3.09	K3.40
Total variable costs	326,592	335,948	345,303	353,808	358,911	394,632	433,755	477,981	525,609	578,340
Contribution	192,780	199,867	204,403	208,231	210,924	231,336	256,851	280,665	309,582	340,200
Fixed Costs										
Labour, utilities, repairs and administration	33,000	36,300	39,930	43,923	48,315	53,147	58,462	64,308	70,738	77,812
Depreciation										
Kwacha denominated assets	5,155	5,155	5,155	5,155	5,155	5,155	5,155	5,155	5,155	5,155
Forex denominated assets:										
at K10 = US $1	30,395	30,395	30,395	30,395	30,395	30,395	30,395	30,395	30,395	30,395
at K15 = US $1	45,592	45,592	45,592	45,592	45,592	45,592	45,592	45,592	45,592	45,592
Interest on loan for purchase of fixed assets										
at K10 = US $1	99,540	89,586	79,632	69,678	59,724	49,770	39,816	29,862	19,908	9,954
at K15 = US $1	142,093	127,884	113,674	99,465	85,255	71,046	56,836	42,627	28,417	14,208
on working capital of K50,000 at 28% per annum	14,000	12,968	20,817	26,631	30,141	31,131	24,057	5,368	-	-
Total Fixed Costs										
at K10 = US $1	182,090	161,436	155,112	149,151	143,589	138,467	133,828	129,720	126,196	123,316
at K15 = US $1	239,840	227,899	225,168	220,766	214,458	206,071	190,102	163,050	149,902	142,767
Net Profit/(loss) Before Tax										
@ K10 = US $1	10,690	38,431	49,291	59,080	67,335	92,869	123,023	150,945	183,386	216,884
@ K15 = US $1	(47,060)	(28,032)	(20,765)	(12,535)	(3,534)	25,265	66,749	117,615	159,680	197,433

	1986	1987	1988	1989	1990	1991	1992	1993	1994	1995
Cash Flow Forecast (K10 = $1)										
Opening Bank Balance	(50,000)	3,760	42,191	91,482	150,056	217,897	310,766	433,789	584,734	768,120
Cash generated from Operations	159,780	163,567	164,473	164,308	162,609	178,189	198,389	216,357	238,844	262,388
Less: Interest on loan	(99,540)	(89,586)	(79,632)	(69,678)	(59,724)	(49,770)	(39,816)	(29,862)	(19,908)	(9,914)
Overdraft interest	(14,000)	-	-	-	-	-	-	-	-	-
Loan Repayment	-	(35,550)	(35,550)	(35,550)	(35,550)	(35,550)	(35,550)	(35,550)	(35,550)	(35,550)
Closing Bank Balance	3,760	42,191	91,482	150,562	217,897	310,766	433,789	584,734	768,120	985,044
Cash Flow Forecast (K15 = $1)										
Opening Bank Balance	(50,000)	(46,313)	(74,346)	(95,112)	(107,648)	(111,183)	(85,919)	(19,171)	98,443	258,122
Cash Generated from Operations	159,780	163,567	164,473	164,308	162,609	178,189	198,389	216,357	238,844	262,388
Less: Interest on loan	(142,093)	(127,884)	(113,674)	(99,465)	(85,255)	(71,046)	(56,836)	(42,627)	(28,417)	(14,208)
Overdraft Interest	(14,000)	(12,968)	(20,817)	(26,631)	(30,141)	(31,131)	(24,057)	(5,368)	-	-
Loan Repayment	-	(50,748)	(50,748)	(50,748)	(50,748)	(50,748)	(50,748)	(50,748)	(50,748)	(50,748)
Closing Bank Balance	(46,313)	(74,346)	(95,112)	(107,648)	(111,183)	(85,919)	(19,171)	98,443	258,122	455,554

Table IV.IV

Plant and Machinery Costs

Local Expeller

	Local Currency (Kwacha)
Oil Expeller	50,000
Premises and storage facilities	25,000
	K75,000

Source: Pannico Engineering, Mufulira.

Table IV.V
ASSUMPTIONS

1. Operating Capacity

The initial operating capacity of the machinery is:

(a) 350 kg of oilseed per day (installed capacity) 98,000 kg in first operating year.

(b) 280 days per annum (plant capacity), and

We also assume that production will remain constant due to the constant availability of locally made spares.

2. Sales Revenue:

The annual mix of production output for sunflower is:

18% oil

20% hulls

62% cake

(Source: ROP 1975 Limited)

Sales prices of those outputs are:

Oil : K7.50 per litre (K9.37 per kg)

Hulls: No value

Cake : K700 per tonne (K0.70 per kg)

(Source: Ministry of Agriculture and Water Development, Planning Division).

Therefore, for a standard 1 kg input, the production and sales proceeds are as follows:

Production	Sales Proceeds
0.18 kg oil	1.69
0.20 kg hulls	-
0.62 cake	0.43
1.00 kg	2.12

Sales prices are expected to rise annually by 10%

3. Variable Costs

(a) Inputs: Oilseeds K70 per bag

(b) Transport Costs of Inputs at K2 per bag

Variable costs per kg are therefore K1.44

(Source: Ministry of Agriculture and Water Development).

4. Annual Fixed Costs

(a) Labour:

	K
Depot Manager	6,000
Machine Operator	4,000
	10,000

(b) Utilities, repairs and administration 18,000

(c) Depreciation of machinery (10% of total machinery cost)

(d) Interest : 28%. Current DBZ rate.

(e) Loan of K75,000 repaid in equal instalments over 10 years.

(f) Initial bank overdraft of K25,000, at 28% interest, taken to cover working capital requirements.

(g) Taxation not allowed for.

(h) No drawing from profits by owner allowed for.

N.B. All costs have been estimated and are based upon our experience in the oil seed sector. We assume that these costs will rise at 10% per annum with the exception of depreciation and interest.

Table IV.VII

Break Even Points

	1986	1987	1988	1989	1990	1991	1992	1993	1994	1995
Inputs										
Inputs (kg)	98,000	98,000	98,000	98,000	98,000	98,000	98,000	98,000	98,000	98,000
Standard Contribution per kg input	0.68	0.75	0.83	0.90	0.99	1.09	1.21	1.32	1.45	1.59
Total Fixed Costs	63,500	61,220	58,680	59,468	61,095	63,094	65,504	68,364	71,720	75,623
Break even input (kg)	93,382	81,627	70,699	66,076	61,712	57,884	54,135	51,791	49,462	47,562
As % of original estimate	95%	83%	72%	67%	63%	59%	55%	53%	50%	49%
Sales Price										
Sales Proceeds	207,760	228,340	251,860	276,360	303,800	334,180	368,480	404,740	444,920	489,020
Net Profit	3,140	12,280	22,660	28,732	35,925	43,726	53,076	60,996	70,380	80,197
[Sales - Net Profit] divided by sales revenue = % of sales revenue required, hence sales price if volume remains stable, to achieve break even.	98%	95%	91%	90%	88%	87%	86%	85%	84%	84%
Variable Costs										
Inputs (kg)	98,000	98,000	98,000	98,000	98,000	98,000	98,000	98,000	98,000	98,000
Sales Price per kg	2.12	2.33	2.57	2.82	3.10	3.41	3.76	4.13	4.54	4.99
Variable costs per kg	1.44	1.58	1.74	1.92	2.11	2.32	2.55	2.81	3.09	3.40
Total Fixed Costs	63,500	61,220	58,680	59,468	61,095	63,094	65,504	68,364	71,720	75,623
Breakeven achieved when contribution per kg is as follows:	0.65	0.62	0.60	0.61	0.62	0.64	0.67	0.70	0.73	0.77
Assuming sales price stays as estimated, the variable costs would have to increase by the following amounts to result in the above contributions per kg.	1.47	1.71	1.97	2.21	2.48	2.77	3.09	3.43	3.81	4.22
As % increase over original variable cost estimate.	2%	8%	13%	15%	18%	19%	21%	22%	23%	24%

Table IV.VI

Projected Profits from Small Scale Expeller 1986 - 1995

	1986	1987	1988	1989	1990	1991	1992	1993	1994	1995
Inputs	98,000	98,000	98,000	98,000	98,000	98,000	98,000	98,000	98,000	98,000
Sales Revenue per kg of input	2.12	2.33	2.57	2.82	3.10	3.41	3.76	4.13	4.54	4.99
Total Sales Revenue	207,760	228,340	251,860	276,360	303,800	334,180	368,480	404,740	444,920	489,020
Variable Cost per kg of input	1.44	1.58	1.74	1.92	2.11	2.32	2.55	2.81	3.09	3.40
Total Variable Costs	141,120	154,840	170,520	188,160	206,780	227,360	249,900	275,380	302,820	333,200
CONTRIBUTION	66,640	73,500	81,340	88,200	97,020	106,820	118,580	129,360	142,100	155,820
Fixed Costs										
Labour, utilities, repairs and administration	28,000	30,800	33,800	37,268	40,995	45,094	49,604	54,564	60,020	66,023
Depreciation of fixed assets	7,500	7,500	7,500	7,500	7,500	7,500	7,500	7,500	7,500	7,500
Interest										
• on loan for purchase of fixed assets	21,000	16,900	16,800	14,700	12,600	10,500	8,400	6,300	4,200	2,100
• on working capital of K25,000 at 28% per annum	7,000	4,020	580	-	-	-	-	-	-	-
Total Fixed Costs	63,500	61,220	58,680	59,468	61,095	63,094	65,504	68,364	71,720	75,623
Net Profit Before Tax	3,140	12,280	22,660	28,732	35,925	43,726	53,076	60,996	70,380	80,197
Cash Flow Forecast										
Bank Balance	(25,000)	(14,360)	(2,080)	20,580	49,312	85,237	128,963	182,039	243,035	313,415
Cash Generated from Operations	38,640	42,700	47,540	50,932	56,025	61,726	68,976	74,796	82,080	89,797
Less Interest on loan	(21,000)	(18,900)	(16,800)	(14,700)	(12,600)	(10,500)	(8,400)	(6,300)	(4,200)	(2,100)
Overdraft Interest	(7,000)	(4,020)	(580)	-	-	-	-	-	-	-
Loan Repayment	-	(7,500)	(7,500)	(7,500)	(7,500)	(7,500)	(7,500)	(7,500)	(7,500)	(7,500)
Bank Balance	(14,360)	(2,080)	20,580	49,312	85,237	128,963	182,039	243,035	313,415	393,612

APPENDIX V

APPENDIX V

SELECTED BIBLIOGRAPHY

Central Statistical Office, 1985, Monthly Digest of Statistics, Vol. 21, No. 10 to 12, Lusaka.

Commercial Farmers Bureau (CFB),

October 1986, Productive Farming No. 155, Lusaka
November 1986, Productive Farming No. 156, Lusaka.

Food and Agricultural Organisation of the United Nations (FAO), African Development Bank, (FAO/ADB) July 1984. Report of the FAO/ADB Investment Centre, Government of the Republic of Zambia Oilseeds Development Project Preparation Report Main Report and Annexes 1-6, Rome.

FAO, UNDP, 1984. National Oilseed Development Programme in Zambia - Interim Report.

FAO, 1983. National Oilseed Development Programme - Study of the Oilseed Industry in Zambia, by N. McFarlane.

FAO, UNDP, GRZ, March 1985. Natiional Oilseed Development Programme Zambia - Soyabean by J. Javaheri and S. Nkumbula, Lusaka.

GRZ/ODA, 1986. Recommended Developments for Small Scale Oilseed Processors, by T. Swetman, Kabwe.

Hickling, J.F. Management Consultants Limited, November 1984. An Analysis of the Oil Seeds Sector in Zambia, Lusaka.

LINTCO

1982 Annual Report 1981/82, Lusaka.
1983 Annual Report 1982/83, Lusaka
1984 Annual Report 1983/84, Lusaka
1985 Annual Report 1984/85, Lusaka

Ministry of Agriculture and Water Development (MAWD).

1983, Annual Agricultural Statistics Bulletin, 1983, Planning Division, Lusaka

1986, Annual Report of Extension Branch, October 1982 - September 1983, Department of Agriculture, The Government Printer, Lusaka.

1983, Department of Marketing and Co-operatives Annual Report for year ended 31st December 1980, The Government Printer, Lusaka.

1984, Department of Marketing and Co-operatives Annual Report for Year Ended 31st December 1981, the Government Printer, Lusaka.

1985, Department of Marketing and Co-operatives Annual Report for Year Ended 31st December 1983, the Government Printer, Lusaka.

1986, Final Crop Forecasts 1985-86. Planning Division, Unpublished, Lusaka.

1983, Groundnut Production and Marketing in Eastern Province - "A marketing Analysis", Planning Division Special Study No. 1, December 1983, Lusaka.

June 1985, MAWD Investment Plan 1986-1990 Main Report (First Draft) Planning division, June 1985, Lusaka.

July 1985, MAWD Investment Plan Task Force - Oil Seeds Sub-Sector Annex (First Draft), Planning Division, July, 1985. Lusaka

1986, Pre-planting Producer Price 1986/87 Season, Unpublished Planning Division, Lusaka.

1985, Quarterly Agricultural Statistics Bulletin July - September 1985, Statistics Section, Planning Division, Lusaka.

1985, Quarterly Agricultural Statistics Bulletin, Oct-Dec. 1985, Statistics Section, Planning Divisiion, Lusaka.

Ministry of Agriculture and Wacer Development

June 1986, Report on the Oilseed Development Programme by the Minister of Agriculture and Water Development, June, 1986. Unpublished Lusaka.

October, 1985, Soyabean - Report of Seven Months Consultancy Work by F. Javaheri in Zambia. Department of Agriculture, Zambia Agricultural Research Extension Project.

Summary of Final Crop Intake by Various Marketing Organisations in Zambia, 1980, 1981, 1982, 1983, 1984 and 1985, Unpublished records from the Statistics Section, Planning Division, Lusaka.

July, 1986, Summary Report Prepared for Fourth National Development Plan 1987-91, MAWD Planning Divison, Lusaka.

The Oil Seed Industry in Zambia with Particular Emphasis on Sunflower, Unpublished, Planning Division, Lusaka.

June 1986, The Oil Seed Development Programme Report.

The Oil Seed Industry in Zambia - A Discussion Document.

MMB Rural Development Corporation, October 1985. Grading and Pricing of Oilseeds in Zambia, Prepared for Canada Department of Agriculture, Ottawa, Ontario.

National Agricultural Marketing Board, (NAMBOARD)

1978 Annual Report and Accounts, Lusaka.
1981 Annual Report and Accounts, Lusaka.
1984 Annual Report and Accounts, Lusaka.
1986 Marketed Crop Production with Corresponding Producer and Selling Prices, Unpublished from the Grains Marketing Divison, Lusaka. NAMB/GMB/46/86.

National Commission for Development Planning, (NCDP)

Jan. 1981 Economic Report 1980. The Government Printer, Lusaka
Jan. 1983, Economic Report, 1982, The Government Printer, Lusaka.
Jan. 1984 Economic Report, 1983, The Government Printer, Lusaka.

World Bank, June 1984. Policy Options and Strategies for Agricultural Growth Report No. 4764-ZA

World Bank, 1985, Zambia Agricultural Pricing and Parastatal Performance Study Report No. 5556-ZA.

APPENDIX VI

APPENDIX VI

LIST OF PEOPLE INTERVIEWED

Name	Organisation	Title/Position
Mr. D. Mwale	Agricultural Farm Equipment, Lusaka	Equipment Supervisor
Mr. Rajan	BRR, Kabwe	General Manager
Mr. Seth	INDECO	Mechanical Engineer
Mr. Hagalaki	Canissius Mission (Chisekesi)	Head, Production Unit
Mr. J. Hudson	Commercial Farmers Bureau	Executive Officer
Mr. Nangambe	Commercial Farmers Bureau	Agricultural Economist
Mr. Sankhulani	ECU Chipata	General Manager
Mr. Kamanga	ECU Katete	District Factory Manager
Mr. G. Sichali	NAMBOARD Lusaka	Marketing Manager
Mr. Psafos	Jama Milling	Managing Director
Mr. Mulela	LINTCO Lusaka	Manager, Seed Cotton Dept.
Mr. Hanyama	" "	Soyabean Department
Mr. Aboo-Zed	" "	Acting Marketing Manager
Mr. J. Banda	MAWD Lusaka	Economist
Mr. Phiri	" "	Statistician Planning Division
Mr. Rahim	" "	Dept of Marketing and Co-ops Res
J. Nanyangwe	" "	Economist, Planning
Mr. Mwala	Mt. Makulu/MAWD, Lusaka	Head Oil Seed Research Division
Mr. Eylands	Mt. Makulu/USAID-ZAMARE, Lusaka	Sunflower Expert
Mr. Javahari	Mt. Makulu/FAO, Lusaka	Soyabean Expert
Mr. T. Swetman	ODA, Kabwe	Technical Co-operation Officer
Mr. Pannicco	Pannico Engineering, Mufulira	Engineer/Director
Mr. Pierce	Refined Oil Products, Lusaka	Production Manager
Mr. Sameti	Refined Oil Products, Ndola	Works Manager,
Mr. Elliot	Refined Oil Products, Lusaka	Works Manager

Mr. I. Jamma	Robinhood, Lusaka	Managing Director
Mr. E. Haji	Sameer, Lusaka	Managing Director
Mr. S. Mutale	SIDO, Lusaka	Projects Officer
Mr. Mwanakatwe	SSEP, Lusaka	Projects Officer
Mr. Aiyanger	GTZ, Lusaka	Administrator
Mr. R. Kressirer	GTZ, Kabompo	Administrator
Mr. M. Kasaro	ZATCO	Factory Supervisor
S. Kondolo	ZATCO	General Manager
Mr. V. Chella	USAID	Economist
Mr. Tembo	UNZA/TDAU	Engineer
S.L. Muyakwa	Lusaka Co-op Union	General Manager
G. Schmidt	North Western Co-op. Union	Acting General Manager
Mr. Chilimo	ZCF	Projects and Research Manager
Mr. Imwikc	Western Co-op Union	General Manager
Mr. J. Pariatus	ZAMOIL	Managing Director
Mr. Matonga	Zamseed	Marketing Manager
Mr. Munkombwe	CFB	Chairman, Oil Seeds Sub Committe.

STUDY OF THE OIL SEED SECTOR IN ZAMBIA

FOR

THE UNITED STATES AGENCY FOR INTERNATIONAL DEVELOPMENT DATABASE

MARCH 1987

130

C O N T E N T S

SECTION I - Production of Oilseeds

SECTION II - Marketing of Oilseeds

SECTION III - Marketing Channels of Oilseeds

SECTION IV - Producer Prices of Oilseeds

SECTION V - Inventory of Oilseed Processors

SECTION VI - Imports and Exports of Oilseeds and By-products

SECTION I - PRODUCTION

USAID OILSEED STUDY DATA BASE

SECTION 1

PRODUCTION

The production data were obtained from three main sources, the National Commission for Development Planning (NCDP), the Ministry of Agriculture and Water Development (MAWD) Agricultural Statistical Bulletins, and the United Nations Food and Agricultural Organisation/Government of Zambia (FAO/GRZ) Crop Forecasting Committee. These three sources were chosen because they give the most consistent set of data for production and marketing at national and provincial levels. When a set of data was not available from these sources, other secondary material such as the Annual Reports of marketing bodies and co-operatives and unpublished data from the MAWD Planning Division was used.

The production break down estimates by category of producer for each province are derived from the proportion of farmers registered with the Commercial Farmers Bureau who grow the oilseed. The percentages used were also discussed and agreed with Mr. Munakombwe, Chairman of CFB, Oilseed Sub-Committee.

Dr. Val Eyland, Dr. Mwala and Dr. Javahari of Mount Makulu Research Station also provided information on the contribution by various producers.

The above information was confirmed by the National Agricultural Marketing Board (NAMBOARD) Marketing Division, the Zambia Cooperative Federation (ZCF) and the various Provincial Co-operative Union depots visited in Kabwe, Choma, Mumbwa and Mkushi.

LINTCO Soyabean and Seed Cotton Divisions gave the information on small scale soyabean producers since 1983 and the seed cotton producers registered with LINTCO. Mr. Mulela and Mr. Hanyama, the managers for the cottonseed and soyabean sections respectively, made their records available for categorisation of production according to area planted, output per hectare and marketed output.

Also the past production patterns for each province and the distribution of farming households were considered by proportion of producers for each year from the National Commission for Development and Planning Baseline Data Report.

It must be emphasised that there is a lack of data on the breakdown of production by category. The estimates used in the data base are our best estimates, based on the research outlined above.

The following percentages are used for each given crop.

Sunflower:	Large Scale Commercial (LSC)	= 1%
	Small Scale Commercial (SSC)	= 3%
	Small Scale Emergent (SSE)	= 6%
	Small Scale Traditional (SST)	= 90%
Soyabeans:	Large Scale Commercial (LSC)	= 80%
	Small Scale Commercial (SSC)	= 10%
	Small Scale Emergent (SSE)	= 5%
	Small Scale Traditional (SST)	= 5%
Cotton Seed:	Large Scale Commercial (LSC)	= 1%
	Small Scale Commercial (SSC)	= 2%
	Small Scale Emergent (SSE)	= 10%
	Small Scale Traditional (SST)	= 87%
Groundnuts:	Large Scale Commercial (LSC)	= 0.5%
	Small Scale Commercial (SSC)	= 0.5%
	Small Scale Emergent (SSE)	= 10%
	Small Scale Traditional (SST)	= 89%

The percentages used are not exact as past production developments within each category and province cause a fluctuation in the mix of pruduction over time. For instance, if the large scale commercial farmer contribution is approximately 3%, fluctuations over time range from 1% to 5% depending on the historic development of that category of production within that province, i.e. the number of farmers in that category may have increased or decreased.

DATA BASE

CROP : SUNFLOWER
DATA : PRODUCTION
UNITS : METRIC TONNES

PROVINCE	1980	1981	1982	1983	1984	1985	1986
EASTERN							
LSC	2	13	11	16	57	49	37
SSC	141	16	19	351	577	494	140
SSE	539	543	907	1,254	1,299	1,482	590
SST	4,818	5,778	9,813	12,809	12,497	10,329	6,608
TOTAL	5,500	6,350	10,750	14,430	14,430	12,354	7,375
SOUTHERN							
LSC	4	14	7	11	43	69	15
SSC	4	135	101	105	292	461	152
SSE	180	561	219	510	1,169	1,313	530
SST	1,912	5,740	3,423	5,394	13,113	13,832	6,878
TOTAL	2,100	6,450	3,750	6,020	14,617	15,675	7,575
CENTRAL							
LSC	10	11	4	21	17	49	162
SSC	92	269	83	440	100	351	235
SSE	382	411	332	716	719	752	486
SST	3,916	4,159	3,731	8,123	8,764	8,868	7,217
TOTAL	4,400	4,850	4,150	9,300	9,600	10,020	8,100
LUSAKA							
LSC	1	2	3	2	-	14	7
SSC	5	19	2	2	171	102	41
SSE	73	78	107	155	342	407	122
SST	671	801	1,138	1,661	2,907	2,868	1,455
TOTAL	750	900	1,250	1,820	3,420	3,391	1,625
OTHER PROVINCES							
LSC	-	1	1	2	9	3	2
SSC	1	11	2	12	10	5	6
SSE	21	30	80	76	89	24	29
SST	228	373	852	740	792	951	288
TOTAL	250	415	935	830	900	983	325
NATIONAL TOTAL	13,000	18,965	20,835	32,400	42,967	42,424	25,000

Source: 1980 Total National and Provincial production data from Economic Report, 1981, NCDP, 1982 Publication.

1981, 1982, 1983 Total National and Provincial Production data from Economic Report, NCDP, 1984 Publication.

1984, 1985, 1986 Total National and Provincial Production data from FAO/GRZ Final Crop Forecasts, by the Early Warning Committee, May 1986, (MAWD).

DATA BASE

CROP : SOYABEANS
DATA : PRODUCTION
UNITS : METRIC TONNES

PROVINCE	1980	1981	1982	1983	1984	1985	1986
EASTERN							
LSC	72	346	302	342	206	61	268
SSC	14	63	16	67	28	17	72
SSE	10	23	16	49	3	6	18
SST	4	18	62	19	150	311	83
TOTAL	100	450	396	477	387	395	441
SOUTHERN							
LSC	274	440	1,194	1,128	1,249	3,246	2,598
SSC	19	93	102	149	67	250	200
SSE	14	91	65	131	27	71	57
SST	53	26	259	59	367	94	837
TOTAL	360	650	1,620	1,467	1,710	3,663	3,692
CENTRAL							
LSC	221	903	903	1,101	1,357	1,818	1,772
SSC	34	204	235	533	154	184	227
SSE	26	113	49	167	31	41	62
SST	9	40	28	60	132	301	308
TOTAL	290	1,260	1,215	1,861	1,674	2,344	2,369
LUSAKA							
LSC	178	774	786	2,072	6770	3,794	4,378
SSC	20	154	79	453	214	160	137
SSE	34	130	37	108	142	40	46
SST	8	22	18	81	2	56	252
TOTAL	240	1,080	920	2,714	7,128	4,050	4,813
OTHER PROVINCES							
LSC	644	454	1,186	1,095	1,880	3,126	165
SSC	87	104	270	50	218	405	19
SSE	84	63	165	57	87	147	10
SST	35	13	33	229	69	607	1,091
TOTAL	850	634	1,654	1,431	2,254	4,285	1,285
NATIONAL TOTAL	1,840	4,074	5,805	7,950	13,153	14,737	12,600

Source: 1980 Total National and Provincial Production, Economic Report, 1981, NCDP 1982 Publication

1981, 1982, 1983 Total National and Provincial Production, Economic Report, 1983, NCDP 1984 Publication

1984, 1985, 1986 Total National and Provincial Production, FAO/GRZ, Final Crop Forecast by the Early Warning Systems Committee, May 1986, (MAWD)

DATA BASE

CROP : COTTON SEED
DATA : PRODUCTION
UNITS : METRIC TONNES

PROVINCE	1980	1981	1982	1983	1984	1985	1986
EASTERN							
LSC	6	4	1	7	11	13	10
SSC	35	22	14	34	72	59	40
SSE	132	77	163	241	364	200	281
SST	2,076	1,010	712	1,438	2,313	1,953	1,678
TOTAL	2,249	1,113	890	1,720	2,760	2,225	2,009
SOUTHERN							
LSC	11	16	12	6	17	17	19
SSC	60	120	90	361	169	1,519	185
SSE	411	407	305	298	1,180	1,389	1,451
SST	3,775	4,083	3,057	4,221	7,066	6,001	7,585
TOTAL	4,257	4,626	3,464	4,886	8,432	8,926	9,240
CENTRAL							
LSC	21	7	14	28	69	25	35
SSC	111	79	104	1,000	606	125	211
SSE	726	518	355	835	1,516	677	984
SST	5,372	3,391	1,793	9,000	11,589	5,435	5,796
TOTAL	6,230	3,995	2,266	10,863	13,780	6,262	7,026
LUSAKA							
LSC	2	8	3	1	5	2	2
SSC	18	10	20	43	14	11	26
SSE	118	36	75	134	157	98	121
SST	770	423	892	800	1,016	532	845
TOTAL	908	477	990	978	1,192	643	994
OTHER PROVINCES							
LSC	-	-	-	-	-	-	-
SSC	14	2	3	2	31	12	8
SSE	30	12	4	18	43	23	23
SST	57	81	68	100	106	61	107
TOTAL	101	95	75	120	180	96	138
NATIONAL TOTAL	13,745	10,306	7,685	18,567	26,344	18,152	19,407

Source: 1980, 1981, 1982, 1983 Total National and Provincial production data from the Agricultural Statistics Bulletin, MAWD, 1983 Publication.

1984, 1985, 1986 Total National and Provincial production data from FAO/GRZ Final Crop Forecasts by the Early Warning Systems Committee, May 1986, MAWD.

DATA BASE

CROP : GROUND NUTS
DATA : PRODUCTION
UNITS : METRIC TONNES

PROVINCE	1980	1981	1982	1983	1984	1985	1986
EASTERN							
LSC	-	-	-	-	-	-	-
SSC	-	-	-	-	-	-	-
SSE	51	42	126	165	189	369	181
SST	1,431	878	3,498	4,635	6,851	6,308	8,885
TOTAL	1,482	920	3,624	4,800	7,040	6,677	9,066
SOUTHERN							
LSC	-	-	-	-	-	-	-
SSC	-	-	-	-	-	-	-
SSE	23	15	24	26	32	74	76
SST	294	251	2,744	1,230	1,536	3,682	3,685
TOTAL	317	266	2,768	1,256	1,568	3,756	3,761
CENTRAL							
LSC	-	-	-	-	-	-	-
SSC	-	-	-	-	-	-	-
SSE	7	7	90	58	56	72	80
SST	183	98	1,398	2,910	1,448	964	1,369
TOTAL	190	105	1,488	2,968	1,504	1,036	1,449
LUSAKA							
LSC	-	-	-	-	-	-	-
SSC	-	-	-	-	-	-	-
SSE	1	-	4	10	8	8	12
SST	3	2	124	366	112	197	418
TOTAL	4	2	128	376	120	205	430
OTHER PROVINCES							
LSC	-	-	-	-	-	-	-
SSC	-	-	-	-	-	-	-
SSE	-	1	96	32	78	56	210
SST	61	132	1,268	1,548	2,963	2,789	3,268
TOTAL	61	133	1,364	1,580	3,041	2,845	3,478
NATIONAL TOTAL	2,054	1,427	9,372	10,980	13,273	14,519	18,184

Source: 1980 - Total National and Provincial production data from Economic Report, 1981, NCDP 1982 publication

1981, 1982, 1983 - Total National and Provincial production data from Economic Report, 1983, NCDP 1984 publication

1984, 1985, 1986 - Total National and Provincial production data from FAO/GRZ Final Crop Forecast by the Early Warning Systems Committee, May 1986, (MAWD)

SECTION II - MARKETING OF OILSEEDS

SECTION II

MARKETING OF OILSEEDS

To ensure consistency of information we have used the same sources for marketing data as for production data. In some cases the marketed output was higher than the total production. In this case, the marketed production was assumed to be equal to the total production.

The percentage of production marketed for each province in each year since 1980 was used to determine the marketed output by category of farmers. In the absence of any reliable data, hypothetical assumptions were formulated for marketing patterns. It was assumed that the marketing pattern for each year is constant within the province and all categories of farmers marketed the same percentage of their production.

According to the available FAO/GRZ information, 42,400 mt of sunflower was produced in 1985 and of this only 25,500 mt was marketed. The statistics sections, of Planning Division consider that the balance, (17,000 mt) was either marketed directly to processors or it could have been exported to neighbouring countries by individual farmers. The other explanation could be that it was marketed through the PCU's but records were not maintained for these transactions.

DATA BASE
CROP: SUNFLOWER
DATA ON: MARKETING
UNIT: METRIC TONNES

PROVINCE	1980	1981	1982	1983	1984	1985	1986
EASTERN							
LSC	2	12	11	13	11	21	32
SSC	23	15	15	420	379	224	280
SSE	439	540	1,144	353	1,038	927	560
SST	2,529	5,751	9,462	13,207	11,549	6,359	6,134
TOTAL	3,093	6,318	10,632	13,993	12,977	7,531	7,006
SOUTHERN							
SSC	4	11	5	11	13	30	12
SSC	4	187	101	105	43	18	293
SSE	180	493	273	510	1,119	1,735	1,370
SST	1,912	5,556	3,275	5,394	13,442	5,934	5,521
TOTAL	2,100	6,247	3,654	6,020	14,617	7,717	7,196
CENTRAL							
LSC	10	11	4	19	17	45	160
SSC	92	269	83	430	257	332	217
SSE	382	411	332	605	730	661	612
SST	3,916	4,159	3,731	7,289	8,122	7,225	6,706
TOTAL	4,400	4,850	4,150	8,343	9,126	8,263	7,695
LUSAKA							
LSC	1	-	3	2	7	7	6
SSC	5	17	2	1	180	99	39
SSE	73	41	105	117	340	238	79
SST	671	801	1,140	1,382	2,550	1,301	1,420
TOTAL	750	859	1,250	1,502	3,077	1,645	1,544
OTHER PROVINCES							
LSC	-	-	-	1	1	3	2
SSC	20	11	2	11	10	4	2
SSE	26	29	73	58	76	73	23
SST	273	323	485	536	541	260	282
TOTAL	319	363	560	606	628	340	309
NATIONAL TOTAL	10,662	18,637	20,246	30,464	40,425	25,496	23,750

Source: 1980, 1982, 1983 - Total National and Provincial marketed produce data from Agricultural Statistical Bulletin, MAWD, 1983 Publication.

1981 - Total National and Provincial marketed data from Annual Report 1981, Department of Marketing and Co-operatives, 1983 publication.

1984, 1985, 1986 - Total National and Provincial Marketing data, from FAO/GRZ Final Crop Forecast by the Early Warning Systems Committee, May 1986, MAWD.

141

DATA BASE.

CROP: SOYA BEANS
DATA ON: MARKETING
UNIT: METRIC TONNES

PROVINCE	1980	1981	1982	1983	1984	1985	1986
EASTERN							
LSC	72	322	202	187	-	46	245
SSC	14	53	45	30	2	12	69
SSE	10	43	4	21	-	5	17
SST	4	14	3	6	55	314	79
TOTAL	100	432	254	244	57	367	410
SOUTHERN							
LSC	274	462	1,174	1,125	749	2,719	2,351
SSC	19	89	102	129	57	237	198
SSE	14	55	12	25	23	65	43
SST	53	24	157	53	366	93	836
TOTAL	360	630	1,445	1,332	1,195	3,114	3,428
CENTRAL							
LSC	221	778	402	1,100	605	1,514	1,624
SSC	34	179	94	485	145	179	211
SSE	26	111	9	142	31	41	60
SST	9	39	12	53	132	259	305
TOTAL	290	1,107	517	1,780	913	1,993	2,200
LUSAKA							
LSC	178	762	659	2,031	6,701	3,799	4,044
SSC	20	432	79	425	211	154	132
SSE	34	262	37	137	139	37	45
SST	8	21	45	79	2	56	248
TOTAL	240	1,477	820	2,672	7,053	4,046	4,469
OTHER PROVINCES							
LSC	16	22	569	700	64	336	82
SSC	4	4	53	115	118	398	19
SSE	2	1	135	35	87	142	9
SST	-	-	121	20	69	205	1,083
TOTAL	22	27	878	870	338	1,081	1,193
NATIONAL TOTAL	1,012	3,673	3,914	6,898	9,556	10,601	11,700

Source: 1980, 1981, 1982, 1983 Total National and Provincial marketed data from Agricultural Statistics Bulletin, MAWD, 1983 publication.

1984, 1985, 1986 Total National and Provincial marketed data from FAO/GRZ Final Crop Forecasts by the Early Warning Systems Committee, May 1986, MAWD.

DATA BASE

CROP: COTTON SEED
DATA ON: MARKETING
UNIT: METRIC TONNES

PROVINCE	1980	1981	1982	1983	1984	1985	1986
EASTERN							
LSC	5	4	3	7	11	13	10
SSC	35	10	26	34	72	59	40
SSE	202	77	51	132	259	173	271
SST	2,007	1,022	811	1,422	2,418	1,980	1,688
TOTAL	2,249	1,113	891	1,595	2,760	2,225	2,009
SOUTHERN							
LSC	11	15	12	6	17	17	19
SSC	60	110	90	361	152	1,519	185
SSE	411	332	279	607	1,180	1,389	1,459
SST	3,775	4,115	3,083	4,221	7,083	6,001	7,577
TOTAL	4,257	4,572	3,464	5,195	8,432	8,926	9,240
CENTRAL							
LSC	0	7	14	25	69	25	70
SSC	130	74	77	209	606	125	211
SSE	920	235	51	1,650	1,516	852	984
SST	5,180	3,324	2,241	8,978	11,589	5,260	5,761
TOTAL	6,230	3,640	2,383	10,862	13,780	6,262	7,026
LUSAKA							
LSC	2	8	2	1	5	1	2
SSC	16	10	10	43	14	11	26
SSE	118	36	20	170	157	98	121
SST	772	423	843	764	1,016	532	845
TOTAL	908	477	875	978	1,192	642	994
OTHER PROVINCES							
LSC	-	-	-	-	-	-	-
SSC	3	2	2	2	31	12	8
SSE	12	28	4	17	43	23	23
SST	86	173	47	88	107	62	107
TOTAL	101	203	53	107	181	97	138
NATIONAL TOTAL	13,745	10,005	7,666	18,737	26,345	18,152	19,407

Source: 1980, 1981, 1982, 1983 - Total National and Provincial marketed data from the Agricultural Statistics Bulletin, MAWD, 1983, publication.

1984, 1985, 1986 - Total National and Provincial marketed data from FAO/GRZ Final Crop Forecasts by the Early Warning Systems Committee, May 1986, MAWD.

DATA BASE

CROP: GROUNDNUTS
DATA ON: MARKETING
UNITS: METRIC TONNES

PROVINCE	1980	1981	1982	1983	1984	1985	1986
EASTERN							
LSC	-	-	-	-	-	-	-
SSC	-	-	-	-	-	-	-
SSE	51	42	32	47	113	96	224
SST	1,431	878	680	959	1,014	2,298	3,500
TOTAL	1,482	920	712	1,006	1,127	2,394	3,724
SOUTHERN							
LSC	-	-	-	-	-	-	-
SSC	-	-	-	-	-	-	-
SSE	12	27	2	-	1	1	3
SST	305	239	18	2	3	7	21
TOTAL	317	266	20	2	4	8	24
CENTRAL							
LSC	-	-	-	-	-	-	-
SSC	-	-	-	-	-	-	-
SSE	12	5	2	-	-	-	16
SST	177	100	12	11	4	2	42
TOTAL	189	105	14	11	4	2	58
LUSAKA							
LSC	-	-	-	-	-	-	-
SSC	-	-	-	-	-	-	-
SSE	1	-	-	-	-	-	2
SST	3	2	-	-	-	-	16
TOTAL	4	2	-	-	-	-	18
OTHER PROVINCES							
LSC	-	-	-	-	-	-	-
SSC	-	-	-	-	-	-	-
SSE	10	5	1	3	1	3	11
SST	53	29	17	19	21	12	166
TOTAL	63	34	18	22	22	15	177
NATIONAL TOTAL	2,055	1,327	764	1,041	1,157	2,419	4,001

Source: 1980, 1981, 1982, 1983 - Total National and Provincial marketed data from agricultural Statistics Bulletin, MAWD 1983 publication

1984, 1985, 1986 - Total National and Provincial marketed data from FAO/GRZ Final Crop Forecasts by the Early Warning Systems Committee, May 1986, MAWD.

SECTION III - MARKETING CHANNELS

DATA BASE

SECTION III

MARKETING CHANNELS

Data on initial buyers were obtained from NAMBOARD and PCU's.

Data on final buyers were made available by the oil processors and stockfeed manufacturers.

There is a complete lack of data, by source and quantity, at processor level. Processors buy from numerous sources at random and records of purchases were not available for our review. In the circumstances, only data given by oilseed buyers/processors are used, and no attempt is made to break down these data by final buyers. Oil seed bought directly by the processors does not enter the official marketing system and thus the amount bought by processors is often higher than the amounts marketed in an area.

The following points must be noted.

1. In 1980, 1981, 1982, ECU retained all their sunflower due to lack of buyers. In 1983, ECU signed an agreement with ROP to sell all their sunflower. According to ZCF in Lusaka, in 1983, ECU lost about 20,000 mt due to a fire and substantial amounts were wasted due to poor storage. ECU have confirmed that they lost a lot of sunflower in 1983 due to fire and poor storage but could not quantify the amounts.

2. In the absence of data on source of oil seed for each oil seed processor, a general source has been indicated.

DATA BASE

CROP: SUNFLOWER

DATA ON: MARKETING CHANNELS (INITIAL BUYERS)

UNIT: METRIC TONNES

PROVINCE	TOTAL PRODUCTION	TOTAL MARKETED	NAMBOARD	PCU	PRIVATE TRADER	OIL PROCESSOR	TOTAL	UNACCOUNTED EXCESS/NOT BOUGHT
EASTERN								
1980	5,500	3,093	1,742	3,093			4,835	1,742
1981	6,350	6,318	3,407	6,295			9,702	3,384
1982	10,750	10,632	4,082	10,636			14,718	4,086
1983	14,430	13,993	3,364	13,976			17,340	3,347
1984	14,430	12,997	23	12,977			13,000	23
1985	12,354	7,531	-	-			-	-
1986	7,375	7,006	-	-			-	-
SOUTHERN								
1980	2,100	2,100	3,094	5,481			8,575	6,475
1981	6,450	6,247	1,327	6,369			7,696	1,449
1982	3,750	3,654	777	3,654			4,431	777
1983	6,020	6,020	2,346	5,814			8,160	2,140
1984	14,617	14,617	-	14,617			14,617	-
1985	15,675	7,717	-	-			-	-
1986	7,575	7,196	-	-			-	-
CENTRAL								
1980	4,400	4,400	6,900	6,721			13,621	9,221
1981	4,850	4,850	5,200	4,840			10,040	5,190
1982	4,150	4,150	5,000	4,154			10,609	6,459
1983	9,300	8,343	4,183	7,739			13,382	5,039
1984	9,600	9,126	-	9,126			9,846	-
1985	10,020	8,263	-	-			-	-
1986	8,100	7,695	-	-			-	-

PROVINCE	TOTAL PRODUCTION	TOTAL MARKETED	NAMBOARD	PCU	PRIVATE TRADER	OIL PROCESSOR	TOTAL	UNACCOUNTED EXCESS/NOT BOUGHT
LUSAKA								
1980	750	750	1,392	-		-	1,392	642
1981	900	851	817	-		-	817	(34)
1982	1,250	1,250	1,323	1,050		1,455	2,505	1,255
1983	1,820	1,502	342	1,387		1,460	3,189	1,687
1984	3,420	3,077	740	2,295		720	3,755	678
1985	3,391	1,645	-	1,450		780	2,230	585
1986	1,625	1,544	-	1,600		720	2,320	776
OTHER PROVINCES								
1980	250	319	128	98	-		226	(93)
1981	415	363	202	233	171		435	72
1982	935	560	2	648	234		650	90
1983	830	606	237	566	151		803	197
1984	900	628	213	626	87		839	211
1985	983	340	-	-	-		-	-
1986	325	309	-	-	-		-	-

Source:

Initial Buyers: Unpublished records from the Department of Marketing and Co-operatives, Mulungushi House.

NAMBOARD Marketed Production Bought by NAMBOARD from Farmers from 1980 to 1986, Grain Marketing Division, NAMBOARD, unpublished memo, Septemebr 1986.

Provincial Co-operative Unions, Marketed Produce Through the Provincial Co-operative Unions, Annual Report 1980, Department of Marketing and Co-operatives, MAWD.

Provincial Co-operative Unions, Marketed Produce Through the Provincial Co-operative Marketing Unions (1981), Annual Report 1981, Department of Marketing and Co-operatives (MAWD).

Final Buyers: Provincial Co-operative Unions, Marketed Produce Through the Provincial Co-operative Buyers: Unions in 1982, 1983, 1984, 1985 and 1986. Unpublished Data Sheets from Department of Marketing and Co-operatives. (1986 data based on MAWD estimates).

All data given were obtained from individual processors through questionnaires and interviews.

N.B. Figures in brackets show sunflower not bought by an offical marketing organisation during that year.

DATA BASE

CROP: SUNFLOWER

DATA ON: MARKETING CHANNELS (FINAL USERS)

UNIT: METRIC TONNES

USER	1980	1981	1982	1983	1984	1985	1986	GENERAL SOURCE
ROP LUSAKA	-	7,444	11,476	26,152	26,988	15,018	24,540	Breakdown of sunflower seed bought by source was not available from ROP except for April 1984 to February 1985. This was as follows: Eastern Province Cooperative Union - 11,361 Southern Province Co-operative Union - 1,680 Central Province Co-operative Union - 8,495 Lusaka Province Co-operative Union - 2,035 Other Provinces (PCU's) - 229 Private commercial farmers 2 Zamseed 551 It can be assumed that the above figures would be proportionally representative of other years as well.
BRR Kabwe						1,500		BRR bought from Southern Province Co-operative Union.
ZATCO				1,500	2,000	3,000	3,000	ZATCO bought all their sunflower from Southern Province Co-operative Union.
Southern African Oil Mills and SAMER							15,000	SAMEER and SAOM bought sunflower from Central Province Co-operative Union.
ZAMOIL						250	1,500	ZAMOIL buy from Central Province Co-operative Union in Kabwe.
ECU Katete						8,000	7,500	ECU Katete buy direct from ECU depot in Chipata.

USER	1980	1981	1982	1983	1984	1985	1986	GENERAL SOURCE
TOTAL BOUGHT BY FINAL USERS	-	7,444	11,476	27,652	28,998	27,768	51,540	

DATA BASE

CROP: SOYABEANS

DATA ON: MARKETING CHANNELS (INITIAL BUYERS)

UNIT: METRIC TONNES

PROVINCE	TOTAL PRODUCTION	TOTAL MARKETED	NAMBOARD & LINTCO	PCU	PRIVATE TRADER	OIL PROCESSOR	TOTAL BOUGHT	UNACCOUNTED EXCESS/NOT BOUGHT
EASTERN								
1980	100	100	60	141	-	-	210	101
1981	450	432	230	202	-	-	432	-
1982	396	254	-	254	-	-	254	-
1983	477	244	-	243	-	-	243	1
1984	387	57	4	244	-	-	248	(191)
1985	395	367	-	57	-	-	57	(310)
1986	441	410	-	-	-	-	-	-
SOUTHERN								
1980	360	360	1,299	1	-	-	1,300	940
1981	650	630	160	56	-	-	216	(414)
1982	1,620	1,445	22	1,423	-	-	1,445	-
1983	1,467	1,332	723	609	145	-	1,477	145
1984	1,710	1,195	5	569	-	-	574	(621)
1985	3,663	3,114	-	1,195	-	-	1,195	(1,919)
1986	3,592	3,428	-	-	-	-	-	-
CENTRAL								
1980	290	290	1,000	-	-	-	1,000	710
1981	1,260	1,107	1,100	-	-	-	1,100	(7)
1982	1,215	517	102	517	-	-	619	102
1983	1,861	1,780	1,398	382	-	-	1,780	-
1984	1,674	913	-	416	-	-	-	-
1985	2,344	1,993	-	913	-	-	-	-
1986	2,369	2,200	-	-	-	-	-	-

PROVINCE	TOTAL PRODUCTION	TOTAL MARKETED	NAMBOARD & LINTCO	PCU	PRIVATE TRADER	OIL PROCESSOR	TOTAL BOUGHT	UNACCOUNTED EXCESS/NOT BOUGHT
LUSAKA								
1980	240	240	1,001	-			1,001	761
1981	1,080	1,477	1,477	-			1,477	-
1982	920	820	282	450			732	(88)
1983	2,714	2,672	-	245			245	(2,427)
1984	7,128	7,053	130	4,140			4,270	(2,783)
1985	4,050	4,046	-	3,960			3,960	(86)
1986	4,813	4,469	-	3,960				
OTHER PROVINCES								
1980	850	22	-	2	20		22	-
1981	634	27	-	4	40		44	17
1982	1,654	878	4	776			780	(112)
1983	1,431	870	624	1,443	-		2,067	1,197
1984	2,254	338	103	235	-		338	-
1985	4,285	1,081	-	321	-		321	(760)
1986	1,285	1.193						

Figures in brackets show soyabeans not bought by an offical marketing channel.

Source:

Initial Buyers: Recorded Summary of Final Crop Intake, 1980 to 1986 Inclusive, by Type of Marketing Organisation, compiled by the Statistics Section, Planning Division (SSPD), MAWD, June 1986.

NAMBOARD Marketed Production Bought by NAMBOARD from Farmers, Grain Marketing Division, NAMBOARD, unpublished memo dated September 1986.

Provincial Co-operative Union - Produce Marketed Through Co-operative Unions, Annual Report 1980 and 1981, Department of Marketing and Co-operatives (MAWD) 1983 publication.

Produce Marketed by Various Marketing Channels in 1980; Economic Report 1981, NCDP 1982 publication.

Produce Marketed through PCU's in Rural Areas from unpublished data from the Department of Marketing and Co-operatives.

Final Buyers: Data from oilseed processors through DH&SMC questionnaires.

DATA BASE

CROP: SOYABEANS

DATA ON: MARKETING CHANNELS (FINAL USERS)

UNITS: METRIC TONNES

USER	1980	1981	1982	1983	1984	1985	1986	GENERAL SOURCE
ROP LUSAKA	-	765	1,943	6,523	2,829	6,084	8,109	Exact source of soyabeans is not known but Lusaka and Central Province is thought to be the major supplier of soya beans to the ROP Lusaka plant.
ROP NDOLA	-	2,680	3,066	2,335	200	1,374	11	Eastern Province Co-operative Union is the major supplier of soya bean to Ndola ROP.
ZATCO	-	-	-	500	200	800	500	ZATCO buy all their soyabeans from Southern Province.

DATA BASE

CROP: COTTON SEED

DATA ON: MARKETING CHANNELS

UNIT: METRIC TONNES

PROVINCE	TOTAL PRODUCTION	TOTAL MARKETED	LINTCO	PCU	PRIVATE TRADER	OIL PROCESSOR	TOTAL BOUGHT	UNACCOUNTED EXCESS/NOT BOUGHT
EASTERN								
1980	2,249	2,249	1,113	-		-	1,113	(1,136)
1981	1,113	1,113	890	-	-	-	890	(223)
1982	890	891	891	-	-	-	891	0
1983	1,720	1,595	1,595	-	-	-	1,595	0
1984	2,760	2,760	2,760	-	-	-	2,760	0
1985	2,225	2,225	2,225	-	-	-	2,225	0
1986	2,009	2,009	2,009		-	-	2,009	0
SOUTHERN								
1980	4,257	4,257	1,999	-	-	-	1,999	(2,258)
1981	4,626	4,572	4,279	-	-	-	4,279	(293)
1982	3,464	3,464	3,464	-	-	-	3,464	0
1983	4,886	5,195	3,886	-	-	-	3,886	(1,309)
1984	8,432	8,432	8,432	-	-	-	8,432	0
1985	8,926	8,926	8,926	-	-	-	8,926	0
1986	9,240	9,240	-	-	-	-	-	-
CENTRAL								
1980	6,230	6,230	4,536	-	-	-	4,536	(1,694)
1981	3,995	3,640	6,973	-	-	-	6,973	3,333
1982	2,266	2,383	2,383	-	-	-	2,383	-
1983	10,863	10,862	6,244	-	-	-	6,244	(4,618)
1984	13,780	13,780	13,780	-	-	-	13,780	0
1985	6,262	6,262	6,262	-	-	-	6,262	0
1986	7,026	7,026	-	-	-	-	-	-

PROVINCE	TOTAL PRODUCTION	TOTAL MARKETED	LINTCO	PCU	PRIVATE TRADER	OIL PROCESSOR	TOTAL BOUGHT	UNACCOUNTED EXCESS/NOT BOUGHT
LUSAKA								
1980	908	908	275	-	-	-	275	(633)
1981	477	477	738	-	-	-	738	261
1982	990	875	875	-	-	-	875	0
1983	978	978	442	-	-	-	442	(536)
1984	1,192	1,192	1,192	-	-	-	1,192	0
1985	643	642	642	-	-	-	642	0
1986	994	994	-	-	-	-	-	-
OTHER PROVINCES								
1980	101	101	59	-	-	-	59	(42)
1981	95	203	110	-	-	-	110	(93)
1982	75	53	86	-	-	-	86	33
1983	120	107	47	-	-	-	47	60
1984	180	181	100	-	-	-	100	81
1985	96	97	142	-	-	-	142	(45)
1986	138	138	-	-	-	-	-	-

N.B. Figures in brackets show cotton seed not bought by an offical marketing organisations in that year.

Source:

Initial Buyers: Lintco - Cotton Seed Marketed Through Lintco from Lintco Annual Reports 1980/81. 1981/82, 1982/83 and 1984/85. 1985/86 data based on Lintco estimates.

Final Buyers: Final buyers from oilseed processors through DH&SMC questionnaires.

DATA BASE

CROP: COTTON SEED

DATA ON: MARKETING CHANNELS (FINAL USERS)

UNITS: METRIC TONNES

USER	1980	1981	1982	1983	1984	1985	1986	GENERAL SOURCE
ROP Ndola	-	761	-	985	8,366	4,867	1,060	LINTCO supplies cotton seed to ROP Ndola and BRR from Lusaka, and Eastern Province.
BRR						7,000	6,500	
Export			2,050	-	10,000	-	2,050	ROP exported the cotton seed to the Republic of South Africa and Zimbabwe.

DATA BASE

CROP: GROUNDNUTS

DATA ON: MARKETING CHANNELS (INITIAL BUYERS)

UNIT: METRIC TONNES

PROVINCE	TOTAL PRODUCTION	TOTAL MARKETED	NAMBOARD	PCU	PRIVATE TRADER	OIL PROCESSOR	TOTAL BOUGHT	UNACCOUNTED EXCESS OVER MARKETED/ NOT BOUGHT
EASTERN								
1980	1,482	1,482	45	2,241	-	-	2,286	804
1981	920	920	7	1,455	-	-	1,462	549
1982	3,624	712	124	913	-	-	1,037	325
1983	4,800	1,006	-	576	-	-	576	(430)
1984	7,040	1,127	-	769	-	-	769	(358)
1985	6,677	2,394	-	463	-	-	463	(1,931)
1986	9,066	3,724	-	-	-	-	-	-
SOUTHERN								
1980	317	317	4	2,628	-	-	2,632	2,315
1981	266	266	4	316	-	-	320	54
1982	2,768	20	-	266	-	-	266	246
1983	1,256	2	-	20	-	-	20	18
1984	1,568	4	-	2	-	-	2	2
1985	3,756	8	-	4	-	-	4	(4)
1986	3,761	24	-	-	-	-	-	-
CENTRAL								
1980	190	189	190	-	-	-	190	1
1981	105	105	105	-	-	-	105	0
1982	1,488	14	-	-	-	-	-	-
1983	2,968	11	-	14	-	-	14	3
1984	1,504	4	-	11	-	-	11	7
1985	1,036	2	-	4	-	-	4	2
1986	1,449	58	-	-	-	-	-	-

PROVINCE	TOTAL PRODUCTION	TOTAL MARKETED	NAMBOARD	PCU	PRIVATE TRADER	OIL PROCESSOR	TOTAL BOUGHT	UNACCOUNTED EXCESS OVER MARKET NOT BOUGHT
LUSAKA								
1980	4	4	4	-	-	-	4	0
1981	2	2	3	-	-	-	3	1
1982	128	-	1	-	-	-	1	1
1983	376	-	-	-	-	-	-	-
1984	120	-	-	-	-	-	-	-
1985	205	-	-	-	-	-	-	-
1986	430	18	-	-	-	-	-	-
OTHER PROVINCES								
1980	61	63	26	1	-	-	27	(37)
1981	133	34	30	10	-	-	40	14
1982	1,364	18	-	1	35	-	36	18
1983	1,580	22	-	18	-	-	18	(4)
1984	3,041	22	-	21	-	-	21	(1)
1985	2,845	15	-	-	-	-	-	-
1986	3,478	177	-	-	-	-	-	-

N.B. Figures in brackets show groundnuts not bought by official marketing organisations in that year.

Source:

Initial Buyers: Produce Marketed through Provincial Co-operative Unions from unpublished data by Department of Marketing and Co-operatives.

Final Buyers: From users of groundnuts such as Zamseed and confectionery firms, Speciality Foods and Lyons Brooke Bond.

CROP: GROUNDNUTS

DATA ON: MARKETING CHANNELS (FINAL USERS)

UNITS: METRIC TONNES

USER	1980	1981	1982	1983	1984	1985	1986	GENERAL SOURCE
ZAMOIL	300	300	300	400	400	1,000	1,500	ZAMOIL bought groundnuts from ECU and also directly from farmers in the Copperbelt and Eastern Province.

SECTION IV - PRODUCER PRICES FOR OILSEEDS

SECTION IV

PRODUCER PRICES FOR OILSEEDS

The producer prices for each crop are announced by the Ministry of Agriculture and Water Development at the beginning of each planting season. This enables farmers to plan their production for the coming season. The GRZ announces the prices by bag. To maintain consistency we have converted these to metric tonnes.

DATA BASE

CROP: SUNFLOWER, SOYABEANS, GROUNDNUTS AND SEED COTTON

DATA ON: PRODUCER PRICES 1980 - 1986

	Sunflower (K/mt)	Soyabeans (K/mt)	Cotton Seed (K/mt)	Groundnuts (K/mt)
1980	328.00	355.56	460.00	437.60
1981	352.00	403.33	460.00	533.75
1982	415.00	470.11	470.00	600.00
1983	430.00	503.33	520.00	687.50
1984	430.00	583.33	580.00	893.75
1985	557.60	676.67	670.00	1,145.88
1986	839.00	1,250.00	990.00	1,637.50
1987	1,400.00	1,644.44	1,600.00	2,025.00

Source: 1980, 1981, 1982, 1983: Annual Agricultural Statistics Bulletin MAWD 1983, Lusaka.

1984, 1985, 1986: Quarterly Agricultural Statistics Bulletin, October-December 1985, MAWD (1985), Lusaka.

1986/87: New Pre-planting Producer Prices 1986/87 Season, MAWD, unpublished memo of October 1986.

USAID OILSEED STUDY DATABASE

SECTION V

INVENTORY OF OILSEED PROCESSORS

All the information on the oilseed processors was collected from oil processing enterprises individually. Comprehensive questionnaires were designed and sent to each one. Both ROP Lusaka and ROP Ndola were visited on numerous occasions and data was compiled from their production records.

Each medium scale oilseed processor was also interviewed individually. Some of them were extremely helpful and gave all the necessary data readily, others were suspicious of the purpose of the exercise and the information received was limited. The data provided by the organisation were accepted at face value as there was no way of cross-checking this information.

There are different types of capacities used in the data base, the following definitions were used to differenciate them:

(a) Installed Capacity - this refers to a maximum output obtainable if plant was to operate on a 24 hour/52 weeks basis and suffered no breakdowns. It is realistically not possible for a machine to operate at maximum throughput for 365 days without stoppage for breakdowns and maintenance. Under the circumstances manufacturers consider it more appropriate to use a daily maximum throughput for installed capacity of industrial machines.

(b) Rated or Planned Capacity - this is defined as a percentage of installed capacity which is thought realistically possible without causing undue damage to the machines. It takes regular maintenance schedules and possible breakdowns into consideration. Each plant's management, therefore, decide their own possible throughput.

(c) Actual or Operational Capacity - this is the actual capacity utilised by the processor. The actual capacity can be higher than the rated capacity if machines are run efficiently and maintenance is carried out in less time than was planned. BRR have a rated capacity of 280 days but an actual capacity of over 300 days. The rated capacity of ROP is 85% installed capacity on 280 day basis, their actual is only about 30% of installed capacity.

DATA BASE

INVENTORY OF LARGE SCALE PROCESSORS 1980 - 1986

ROP LUSAKA

OIL PROCESSOR	OILSEEDS BOUGHT mt		OILSEEDS UTILISED mt		CRUSHING CAPACITY INSTALLED mt/day		CRUSHING CAPACITY PLANNED mt/yr (280 days = 1yr)		ACTUAL WORKING %		REFINING CAPACITY INSTALLED mt/day	REFINING CAPACITY ACTUAL WORKING	PACKAGING CAPACITY mt/day	OIL OUTPUT (crude or Refined) mt		OILSEEDS EXPORTS	
	SF	SB	SF	SB	SF	SB	SF	SB	SF	SB				SF	SB	SF	SB
1980	-	-	-	-	100	N.A	28,000	-	-	-	120	80	20				
1981	7,444	756	7,044	-	100	N.A	28,000	-	25	-	120	80	20	1,761			
1982	11,476	1,943	8,678	-	100	N.A	28,000	-	31	-	120	80	20	2,168	-		
1983	26,152	6,523	25,870	2,639	100	40	28,000	-	34	28	120	80	20	7,761	554		
1984	26,988	2,829	23,410	3,035	320	40	76,160*	9,600	31	32	120	80	20	6,555	607		
1985	15,018	6,084	21,707	2,010	320	40	76,160	9,600	28	21	120	80	20	6,295	602		
1986	24,542	8,109	30,817	3,924	320	40	76,160	9,600	40	41	120	80	82	9,245	748	5000	6000

*Planned Capacity for ROP Lusaka from 1983 is based on 85% of installed capacity for 280 days. $\left(\frac{85 \times 320}{100} \times 280 = 76{,}160\right)$

List of Machinery:

4xKRUPP Continuous Expellers, Germany;

BUHLER Cleaner, Switzerland;

BERNARDINI Solvent, Extracter, Italy;

WESTFALIA Refinery, 120mt/day and 40mt Batch Refiner;

KRUPP Continuous Bleacher.

N.B. ROP bought 26,244 mt of soyabeans from 1980 to 1986, but utilised only 11,608 mt and exported 6,000 mt to Zimbabwe. There are no records to show what happened to the balance 10,000 mt. Similarly ROP Lusaka records show that ROP used 117,000 mt of sunflower, from 1980-1986 although they only bought 113,000mt during this period. This could be due to poor records keeping.

DATA BASE

INVENTORY OF LARGE SCALE PROCESSORS 1980-86

ROP NDOLA

OIL PROCESSOR	OILSEEDS BOUGHT mt		OILSEEDS UTILISED mt		CRUSHING CAPACITY INSTALLED mt/day		CRUSHING CAPACITY PLANNED mt/yr (240day=1yr)		ACTUAL WORKING %		REFINING CAPACITY INSTALLED mt/day	REFINING CAPACITY ACTUAL WORKING	PACKAGING CAPACITY mt/day	OIL OUTPUT (crude or refined) mt		OILSEEDS IMPORTS & EXPORTS
	SB	CS	SB	CS	SB	CS	SB	CS	SB	CS				SB	CS	
1980	-	-	1,580	1,510	80*	25	4,800	6,000	33	25	48	20	70			
1981	2,680	761	2,680	761	80*	25	4,800	6,000	56	13	48	20	70	192	252	NOT
1982	3,066	Nil	2,137	Nil	80*	25	4,800	6,000	45	nil	48	20	70	346	135	AVAILABLE
1983	2,335	985	2,132	376	80*	25	4,800	6,000	44	7	48	20	70	248	Nil	
1984	200	8,366	167	7,524	80*	25	4,800	6,000	2	63	48	20	70	240	27	
1985	1,374	4,867	1,063	6,801	40	50	9,600	12,000	11	57	48	20	70	16	745	
1986	11	1,060	-	1,560	40	50	9,600	12,000	-	13	48	20	70	90	764	

*Although ROP Ndola had a soya crushing plant with an installed capacity of 80 mt/day, it was in very poor state and could only operate at a maximum throughput of 20 mt/day. (20mt x 240 days = 4,800). In 1985, a new plant was commissioned which had a crushing capacity of 40 mt/day. The old plant is currently not in use.

List of Machinery:

HERCULES Expeller, British;

KRUPPS MAXOILS Expeller, Germany;

UMAS Expeller, India;

UMAS delinters, India;

BATCH Refinery (Make unknown);

KRUPP Continuous Bleacher, Germany;

FORGROVE Packing Machine, British.

N.B. ROP Ndola records show that 15,600 mt of cotton seed was bought from 1980 to 1986 and 18,400 mt was actually crushed. This could be due to errors in the recorded data.

DATA BASE

INVENTORY OF MEDIUM SCALE EXPELLERS 1980-86

EASTERN PROVINCE CO-OPERATIVE UNION, KATETE PLANT

OIL PROCESSOR	OILSEEDS BOUGHT mt	OILSEEDS UTILISED mt	CRUSHING CAPACITY INSTALLED mt/day	CRUSHING CAPACITY PLANNED mt/yr	ACTUAL WORKING	REFINING CAPACITY INSTALLED mt/day	REFINING CAPACITY ACTUAL WORKING	PACKAGING CAPACITY mt/day	OIL OUTPUT (crude or refined) mt	OILSEEDS IMPORTS & EXPORTS mt
	SF	SF	SF	SF	SF %					
1985	8,000	5,000	50	9,600	52	None		None	Data not Available	None
1986	7,500	7,000	50	9,600	72					
1987	-	-	50	9,600	-					

List of Machinery:

KUMAR Continuous Expeller, (India)

N.B. The Planned capacity is 80% of installed capacity x 240 days (40 x 240 days).

DATA BASE

INVENTORY OF MEDIUM SCALE PROCESSORS 1980-86

BRR-KABWE

OIL PROCESSOR	OILSEEDS BOUGHT mt		OILSEEDS UTILISED mt		CRUSHING CAPACITY INSTALLED mt/day	CRUSHING CAPACITY PLANNED mt/yr	ACTUAL WORKING CS+SF %	REFINING CAPACITY INSTALLED mt/day	REFINING CAPACITY ACTUAL WORKING 300 days	PACKAGING CAPACITY mt/day	OIL OUTPUT (crude or refined) mt/yr	OILSEEDS IMPORTS EXPORTS mt
	SF	CS	SF	CS	CS	CS						
1985	-	7,000		7,000	50	12,000	58	15	1,800	16	1,800	None
1986	1,500	7,500	1,500	6,500	50	12,000	67	15	1,800	16	1,800	-
1987			-	-	50	12,000	-	15	1,800	16	1,800	-

List of Machinery:

MURRAY CARVER Delinter USA;

ANDERSON INTERNATIONAL Continuous Expeller, USA;

BERNADINI Refinery, Italy.

N.B. Planned Capacity for BRR is based on 80% of installed capacity for 300 days per annum.

DATA BASE

INVENTORY OF MEDIUM SCALE EXPELLERS 1980-86

ZATCO - Stockfeeds - Choma

OIL PROCESSOR	OILSEEDS BOUGHT mt		OILSEEDS UTILISED mt		CRUSHING CAPACITY INSTALLED mt/day		CRUSHING CAPACITY PLANNED mt/yr (240day=1yr)		ACTUAL WORKING %		REFINING CAPACITY INSTALLED mt/day	REFINING CAPACITY ACTUAL WORKING	PACKAGING CAPACITY mt/day	OIL OUTPUT (crude or refined) mt	OILSEEDS IMPORTS & EXPORTS
	SF	SB	SF	SB	SB	SF	SB	SF	SB	SF	SB	SF			
1982			-	-	8.5	16.5	1,500	3,000	-	-			None	Not Available	None
1983	1,500	500	1,452	225	8.5	16.5	1,500	3,000	-	-	15	48			
1984	2,000	200	1,591	269	8.5	16.5	1,500	3,000	-	-	18	53			
1985	3,000	800	2,804	880	8.5	16.5	1,500	3,000	-	-	58	93			
1986	3,000	500	2,950	700	8.5	16.5	1,500	3,000	-	-	47	98			
1987					8.5	16.5	1,500	3,000	-	-	-	-			

List of Machinery:

KUMAR Continous Expeller, (India).

Planned Capacity is about 75% of installed capacity for 240 days. Oil output is a by-product for ZATCO as all oil seeds are crushed for manufacturing stock-feed. The oil extraction rates are very low around 11% for sunflower and 5% for soyabeans.

DATA BASE

INVENTORY OF MEDIUM SCALE EXPELLERS 1980-86

SOUTHERN AFRICAN OIL MILLS

OIL PROCESSOR	OILSEEDS BOUGHT mt SF	OILSEEDS UTILISED mt SF	CRUSHING CAPACITY INSTALLED mt/day SF	CRUSHING CAPACITY PLANNED mt/yr (280day=1yr) SF	ACTUAL WORKING SF %	REFINING CAPACITY INSTALLED mt/day	REFINING CAPACITY ACTUAL WORKING	PACKAGING CAPACITY mt/day	OIL OUTPUT (crude or refined) mt	OILSEEDS IMPORTS & EXPORTS
1986	2,200	270	30	8,400	3	5	1	None	Not Available	None

Machinery:

SUPER DUO ANDERSON Expeller, U.S.A.;

BERNADINI Refinery.

Planned Capacity is 30 mt x 280 days = 8,400 per year.

DATA BASE

INVENTORY OF MEDIUM SCALE EXPELLERS 1980-86

ZAMOIL - Luanshya

OIL PROCESSOR	OILSEEDS BOUGHT mt		OILSEEDS UTILISED mt		CRUSHING CAPACITY INSTALLED mt/day		CRUSHING CAPACITY PLANNED mt/yr (210day=1yr)		ACTUAL WORKING %		REFINING CAPACITY INSTALLED mt/day	REFINING CAPACITY ACTUAL WORKING	PACKAGING CAPACITY mt/day	OIL OUTPUT (crude or refined) mt	OILSEEDS IMPORTS & EXPORTS
	SF	G/nuts	SF	G/nuts			G/nuts	SF	G/nuts	SF					
1980	-	300	-	224	15	10	2,500	1,700	9	-	None		None	Not Available	None
1981	-	300	-	288	15	10	-	-	11	-					
1982	-	300	-	344	15	10	-	-	14	-					
1983	-	400	-	400	15	10	-	-	16	-					
1984	-	400	-	520	15	10	-	-	21	-					
1985	250	1,000	250	800	15	10	-	-	32	15					
1986	1,500	1,500	1,500	1,500	15	10	-	-	60	88					

Machinery:

Indian, (Make unknown as it was bought 30 years ago and all name plates are worn out).

Planned capacity is about 80% of installed capacity on a 210 day basis.

170

DATA BASE

INVENTORY OF MEDIUM SCALE EXPELLERS 1980-86

Robinhood - Lusaka

OIL PROCESSOR	OILSEEDS BOUGHT mt SF	OILSEEDS UTILISED mt SF	CRUSHING CAPACITY INSTALLED mt/day SF	CRUSHING CAPACITY PLANNED mt/day	ACTUAL WORKING SF %	REFINING CAPACITY INSTALLED mt/day	REFINING CAPACITY ACTUAL WORKING mt/day	PACKAGING CAPACITY mt/day	OIL OUTPUT mt (crude or refined	OILSEEDS IMPORTS & EXPORTS
1982	1,500	1,440	12	2,600	55	None		None	Not Available	None
1983	1,500	1,440	12	2,600	55					
1984	1,500	720	12	2,600	28					
1985	1,500	720	12	2,600	28					
1986	1,500	720	12	2,600	28					
1987	1,500	720	12	2,600	28					

Machinery:

UNITED ENGINEERING, Calcutta Continuous Expeller, India.

The Planned Capacity was based on 90% of installed capacity for 240 days in 1982 and 1983. The machienry was burnt down in 1984 and since then they have been operating on a very irregular basis.

DATA BASE

INVENTORY OF MEDIUM SCALE EXPELLERS 1980-86

Sameer Oil Products - Lusaka

OIL PROCESSOR	OILSEEDS BOUGHT mt SF	OILSEEDS UTILISED mt SF	CRUSHING CAPACITY INSTALLED mt/day SF	CRUSHING CAPACITY PLANNED mt/yr (280day=1yr) SF	CRUSHING CAPACITY ACTUAL WORKING SF %	REFINING CAPACITY INSTALLED mt/day	REFINING CAPACITY ACTUAL WORKING	PACKAGING CAPACITY mt/day	OIL OUTPUT (crude or refined mt	OILSEEDS IMPORTS & EXPORTS
1986	10,000	7,000	15	4,200	-	None		None	Not Available	None
1987			15	4,200	-					

Machinery:

AULIA, by Aulia Engineering - Continuous Expeller, Pakistan.

Planned capacity will be 100 per cent of installed capacity based on a 280 day year. 15 x 280 = 4,200 mt/year. Sameer started operations in July this year and are still operating on an experimental basis to familiarise themselves. The actual working capacity is therefore not known.

DATA BASE

INVENTORY OF OILSEED PROCESSORS - SMALL SCALE

	ORIGIN	YEAR OF INSTALLATION	RATED CAPACITY per hour	PERCENT UTILISATION	LOCATION IN ZAMBIA	
SIMON ROSEDOWN MINI-40 Continuous expeller	United Kingdom	1984	50kg			
(a) Mulilima Multipurpose Co-operative society		1985	"		Serenje	Central
(b) Kabwe Regional Research Station		1985	"		Kabwe	Central
(c) Nomadelphia Community		1982	"		L/West	Lusaka
(d) Nakambala Sugar Estate		1982	"		Mazabuka	Southern
(e) Chikankata Secondary School		1983	"		Chikankata	Southern
(f) Mr. J. Stubbs Commercial Farmer		1984	"		Mazabuka	Southern
(g) Lumbe MPCS, Kaso		1984	"		Chinsali	Northern
(h) Lwitikila MPCS			"		Mpika	Northern
(i) Kabwe Regional Research Station		1985	"		Kabwe	Central
PANNICO's - By PANNICO Engineering of Mufulira (after the Simon Rosedown Mini-40)	Zambia		50kg			
(a) Mr. Pannico		1986	"		Mufulira	Copperbelt
(b) Ms. Linda Pereze (GTZ IRDP Co-ordinator)		1986	"		Solwezi	N/Western
(c) Zambia Co-operative Federation						
(i) Province Co-operative Union		1986	"		Not yet Installed	Southern
(ii) " " "		1986	"			Lusaka
(iii) " " "		1986	"			Central
(iv) " " "		1986	"			Northern
(v) " " "		1986	"		Kawambwa	Luapula
(vi) " " "		1986	"			Western
(vii) " " "		1986	"			N/Western
(viii) " " "		1986	"			Eastern

	ORIGIN	YEAR OF INSTALLATION	RATED CAPACITY per hour	PERCENT UTILISATION	LOCATION IN ZAMBIA	
MONTFORD - REINERS "KOMET" BD 85 DOUBLE SPINDLE PRESS continuous expeller	Germany	1985	25-30kg			
(a) Mbala Catholic Mission (St. Francis Catholic Church)		1982	"		Mbala	Northern
(b) St. Andrews Parish Church Mpika		1985	"		Mpika	"
(c) Mpika District		"	"		Mpika	"
(d) Serenje District		"	"		Serenje	Central
(e) Small-scale Enterprises Promotion Limited		"				
(i) Libwe Milling		"	"		K/Mposhi	Central
(ii) PCU		"	"		Lusaka	Lusaka
(iii) Mafula Oil Limited		"	"		Lusaka	Lusaka
(f) Mwembeshi Settlement Village		"	"		Lu/West	Lusaka
(g) Kabompo, IRDP		"	"		Kabompo	N/Western
(h) PCU (North Western)		1984	"		Solwezi	"
(i) Lusaka Province		1985				

	ORIGIN	YEAR OF INSTALLATION	RATED CAPACITY Kg/hr	PERCENT UTILISATION	LOCATION IN ZAMBIA	
CeCoCo HANDER Continuous expeller	Japan	1971	SF			
(a) Chilanga Bakery (i) Type M			50-60	70%	Chilanga	Lusaka
(ii) Type 54			170-190	60%	Chilanga	Lusaka
(b) Canisius Mission (i) Type M		1982	50-60	80%	Chisekesi	Southern
PENCH AGRICULTURAL TOOL AND MACHINERY WORKS						
MODEL ZYB78 Screw Type continuous expeller	China	1985	40-50 30-35			
(a) Kaleya Small Holdings					Lusaka Kaleya	Lusaka Southern
POWER GHANI	India	-	(Not operational)			
HYDRAULIC PRESS (manual batch process)	Netherlands (KIT)		12.5	60%		
(a) Kasisi (Catholic Mission)		1980	12.5	80%		
(b) Kaoma		1985	12.5			
HAND OPERATED SCREW TYPE PRESS	Netherlands (KIT)	1984	12.5	80%		
(a) Dutch assisted womens extension group			12.5	80%	Sinajola Gwembe	Southern
(b) " " " " "			12.5	80%	Siabaswe "	Southern
CHINA IMPORT EXPORT CO-ORPORATION	China	1985	SF			
(a) Central African Chemical Industries (works on 24 hour basis 300 days/yr)						
Use about 360 mt/yr sunflower, of which 270 mt is bought direct from farmers.						
(i) Use about 360 mt/yr sunflower		1986	50	90%	Industrial Area	Lusaka
(ii) A second machine with twice the capacity has been imported; not installed yet			100			

SECTION VI - IMPORTS AND EXPORTS OF OILSEEDS AND BY-PRODUCTS

USAID OILSEED STUDY DATABASE

SECTION VI

IMPORTS AND EXPORTS OF OILSEED AND BY-PRODUCTS

Oilseeds are imported by stockfeed manufacturers. National Milling Company imports soyabeans from India and other sources. The actual quantities imported annually are not available as National Milling Company Management, through Indeco, consider this information confidential. There is no organised dealing with oilseed imports and individuals import directly whenever the need arises. This makes it extremely difficult to obtain reliable data. In the circumstances, we went to MAWD and scrutinised successful imports and exports for oilseeds for the past five years. These have been used for the data base. The only other reliable source is MAWD Statistics Bulletin but this has very little data. The McFarlene Oilseed study is also used together with some World Bank data.

DATA BASE

DATA ON: IMPORTS AND EXPORTS

UNIT: METRIC TONNES

	1980	1981	1982	1983	1984	1985	1986
CRUDE OIL (1)							
Imports:	-	11,000	11,300	14,500	10,549	10,500	12,863
Exports:	Nil	Nil	Nil	Nil	Nil	Nil	Nil
OIL SEEDS (2)							
Imports:							
Sunflower	-	-	30	374	-	374	5
Soya Beans		2	9				
Cotton Seed							
Groundnuts				(4,000)			
Other Oil Seeds							
Exports:							
Sunflower					-	(2,000)	-
Soyabeans					(4,500)	(24,000)	-
Cotton Seed					-	(6,000)	-
Groundnuts		(2,000)					
OIL SEED BY-PRODUCTS							
Imports: (3)							
Sunflower			993	-	-	-	
Soya Beans			437	(3,000)	-	192	
Cotton Seed			971	(16,476)	-	336	
Groundnuts			-	5,500	-	-	
Other			40	369	-	10	

Exports: Data not available

Source: Figures in brackets were obtained from the Department of Co-operatives, in the Ministry of Agriculture and Water Development and Co-operative records.

1. Crude Oil Imports from USAID Data Files.

2. Annual Agricultural Statistical Bulletin, 1985.

3. N. McFarlane, National Oilseed Development Programme, Study of the Oilseed Industry in Zambia, FAO, 1984.

ARIES

Assistance to
Resource Institutions
for Enterprise Support

SUPPLEMENTARY ANNEX 2

Zambia Agricultural Marketing Support Project
Market Potential for Fruits, Vegetables, and Minor Field Crops

June 1988

Submitted to
USAID/Zambia

Submitted by
Edgar Ariza-Nino, Team Leader
Philippe Dardel, and
Agmmark Limited

The views and interpretations in this publication are those of the authors and should not be attributed to the U.S. Agency for International Development.

PROJECT OFFICE: Robert R. Nathan Associates, Inc., 1301 Pennsylvania Avenue, N.W., Washington, D.C. 20004 (202) 393-2700 Telex: 248482 NATSCON
In Collaboration With • Appropriate Technology International • Control Data Corporation • Harvard Institute for International Development
AGENCY FOR INTERNATIONAL DEVELOPMENT CONTRACT DAN-1090-C-00-5124-00

171

ARIES

Assistance to
Resource Institutions
for Enterprise Support

The ARIES project is designed to strengthen the capabilities of support organizations in developing countries to implement small-scale and micro-enterprise development programs. ARIES builds on the work of the Agency for International Development's former Program for Investment in the Small Capital Enterprise Sector (PISCES) and Small Business Capacity Development projects. It works with intermediary support organizations that provide services to small and micro-businesses and industries, such as private voluntary organizations (PVOs), banks, chambers of commerce, management training centers, business people's organizations, and other developing country government and non-governmental organizations (NGOs).

The contract for this five-year project has been awarded to Robert R. Nathan Associates, Inc. (RRNA) with subcontractors Harvard Institute for International Development (HIID), Control Data Corporation (CDC) and Appropriate Technology International (ATI).

ARIES is core funded by the Bureau for Science and Technology's Office of Rural and Institutional Development (S&T/RD) and the Bureau for Food for Peace and Voluntary Assistance's Office of Private and Voluntary Cooperation (FVA/PVC). Mission funded technical assistance represents $3.8 million, or almost three-fifths of the five-year budget of $6.8 million.

The ARIES project has three major components -- research, training, and technical assistance -- designed to cross-fertilize each other. The applied research component focuses on economic, social, and organizational issues surrounding intermediary support organizations to inform AID missions and host country actions in this subsector. The training component includes design, testing, conduct and follow-up of training programs in such areas as finance, management and evaluation for PVO and NGO personnel. The technical assistance component provides short-term technical assistance to AID missions and intermediary organizations to assist small and micro-enterprise development.

PROJECT OFFICE: Robert R. Nathan Associates, Inc., 1301 Pennsylvania Avenue, N.W., Washington, D.C. 20004 (202) 393-2700 Telex: 248482 NATECON

In Collaboration With • Appropriate Technology International • Control Data Corporation • Harvard Institute for International Development

AGENCY FOR INTERNATIONAL DEVELOPMENT CONTRACT DAN-1090-C-00-5124-00

140

PREFACE

This study of the marketing system for fruits, vegetables, and minor field crops was entrusted by USAID/Lusaka to Robert R. Nathan Associates of Washington D.C. In addition, USAID engaged Agmmark Limited of Lusaka to support RRNA in the collection of basic field information on marketing of the selected commodity groups. Two RRNA consultants were primarily responsible for the study, Edgar J. Ariza-Nino and Philippe Dardel. Each component report reflects the joint work of several persons, but final responsibility rests with the individuals named as principal authors.

We both express our appreciation and gratitude for the support of our colleagues at USAID and Agmmark in the course of this assignment (April-May 1988). Dr. J. Snell of USAID was especially helpful in orienting the course of the studies. P. Flemming and S. Haley of Agmmark shared with us their knowledge of Zambia's agricultural sector and its problems. Finally, we are especially indebted to the numerous farmers, traders, and other marketing participants who were so willing to be inconvenienced by our questions.

TABLE OF CONTENTS

Executive Summary

Vol. I : Fruit and Vegetable Marketing in Zambia
Philippe Dardel

Vol. II : Market Prospects for Cassava, Millet, and Sorghum
Edgar J. Ariza-Nino

Vol. III: Other Minor Crop Studies
Agmmark Limited

Annexes

1. Cooperatives and Agricultural Marketing in Zambia
2. Agricultural Marketing Policy in Zambia
3. Rural Transport and Oxcarts
4. ZAMS Dollars and Zambia's Debts
5. Scope of Work

EXECUTIVE SUMMARY

Introduction

USAID/Lusaka commissioned this study to gather essential background information on the marketing system for selected farm products in order to enable a subsequent team to design the Zambia Agricultural Marketing Support project (ZAMS). Two groups of commodities were originally identified: fresh fruits and vegetables for the domestic market, and three traditional staple crops -- cassava, millet, and sorghum.

Part of the rationale for selecting these crop categories was that government programs have not affected these products directly. The assumption was that private trade in these commodities could be encouraged by ZAMS. For the CMS crops (cassava, millet, and sorghum) it was quickly concluded that current pricing and subsidies policies towards maize have completely displaced these staples from urban diets, and from part of rural diets as well. Fruits and vegetables, being less subject to substitution by maize, offer a more fertile environment for private initiatives in marketing.

The report consists of three separate volumes concerning fruits and vegetables (Volume I), cassava, millet and sorghum (Volume II), and other minor crops and initiatives (Volume III). Several appendices are also included (Volume IV) concerning specific issues and agricultural marketing constraints in Zambia. Summaries from each volume of the principal findings and implications for possible ZAMS initiatives are given below.

Fruits and Vegetable Marketing

Three components of the Zambian fruit and vegetable market are analyzed separately: the domestic market for fresh produce, exports of high-value products to Europe, and the domestic processing industry.

Fresh vegetables and fruits are consumed throughout the country all through the year. There are no specialized producers of fruits and vegetables for the domestic market, not even near large cities. Farmers all over the country produce small quantities of vegetables for their own consumption, but only among a few does this production constitute the major commercial farm activity. More often, vegetable production is a sideline to other farm or economic enterprises.

Production areas are not well defined. Good climate and favorable soils and water conditions for vegetable production are present through the country. Each major consumption center is supplied from area farms along the main paved roads. Vegetable farming and marketing for the domestic market is mostly in the hands of indigenous Zambian farmers and traders.

Most local producers are small, with half a hectare of vegetables, at most. Large-scale and advanced "commercial" farmers are conspicuously absent in the production of produce for the Zambian population. The expatriate and elite community consuming European-type vegetables and fruits constitutes a small market, involving some special producers and marketing channels. Most of the following observations concern the popular Zambian market.

The absence of a greenbelt around Lusaka and other major towns is surprising and puzzling to marketing professionals from other countries. Vegetables to feed large cities in developing countries often come from intensively cultivated garden plots around those cities, to minimize transport costs, which are by far the major marketing cost component. The empty spaces surrounding Lusaka and other Zambian cities are economic anomalies perhaps better explained by historical reasons.

Lands around Lusaka are owned by the District Councils, and their use and allocation are strictly controlled. Housing construction is allowed only according to well planned development schemes, normally drawn up by the state-owned housing authorities; therefore, land cannot be easily bought and used.

Farm land all along the major rail line and paved road was allocated in colonial times to expatriate commercial farmers, and no major land reform has been made since independence. Today, large-scale commercial farmers along the main transport arteries show little interest in vegetable production for local consumption. Vegetables for local consumption are produced almost entirely by small African farmers in areas removed from the big cities and the better highways.

Every day it is estimated that 50 to 70 tons of produce arrive in Lusaka, mainly through the Soweto wholesale market. This time of year (April-May), roughly half of the volume is tomatoes, and rape leaves (similar to collard leaves) are the second most common item. Other vegetables are also present but in relatively small amounts compared with tomatoes and rape.

The main difficulty encountered by farmers in marketing tomatoes and other vegetables is transport. It is especially difficult to get produce from the farms to the nearest town or roadside collection point. Feeder roads are rapidly deteriorating, and motorized transport becomes impossible during the rainy season. Once on the paved road, truck transport to market is scarce but eventually available.

Farmers ordinarily accompany their produce to the city until it is sold in the market. There are few standing arrangements between farmers and wholesale traders in the cities for regular vegetable deliveries. A few traders

do travel to production areas to bring produce to the city; this occurs especially in times of scarcity.

Except for some village markets in the Copperbelt area, there are no organized assembly markets in the main producing areas, not even in Mumbwa, which was providing the bulk of the produce for Lusaka this time of the year (May).

Wholesale markets in Lusaka and Ndola are utterly inadequate for their functions. They consist of nothing more than an empty space at the entrance of the city where incoming trucks from producing areas are unloaded, and trading takes place by the road side. In the rainy season, mud and stagnant waters pose a public health menace, as well as an economic cost.

Marketing of fresh fruits and vegetables is relatively free from government interference. Prices vary often and fluctuate quickly in response to market conditions. There are large numbers of producers, traders, and retailers, and no evidence of market concentration. Entry and exit are relatively easy. In Lusaka and Ndola large numbers of small-scale retailers (marketeers) take care of distributing daily supplies of vegetables and fruits among the popular compounds through a network of neighborhood markets.

The government poses a problem mainly in two areas. First, occasional harassment of vendors by police and United National Independence Party (UNIP) vigilantes in vain attempts to dictate prices of rape, tomatoes, and other vegetables. Itinerant vendors are illegal. Women street vendors of fruits and vegetables are periodically rounded up by police and party militants. Second, the municipalities' inability to build and maintain retail markets for the rapidly growing urban population has led to the proliferation of spontaneous markets, which the authorities are constantly threatening to bulldoze. The legalization and improvement of these spontaneous markets should be sought.

Consumer prices are high relative to income levels. Price fluctuations are also large through the year because of irregular supplies, rigidity in demand, and seasonal effects.

There is a small fruits and vegetables processing industry consisting of a handful of firms that produce canned products, preserves, juices, and jellies. The demand for these products is small relative to the fresh market, and concentrated among the high-income and expatriate community. These processors are supplied mainly by a few commercial farmers producing almost exclusively for that purpose.

Fresh fruits and vegetables are exported by air to Europe, and also to neighboring countries. The volume is small, reaching up to 700 tons a year, supplied mainly by a handful of large expatriate farmers with advanced production and packaging technology and good marketing connections in Europe. Their production is aimed at the export market in terms of product selection and high quality. There is no domestic market for left-over production below export-grade quality.

185

Reduction of price fluctuations from seasonal changes in production could be accomplished in several ways:

- Increasing the diversity of vegetables in the domestic market and of varieties of each type of vegetable to provide a smoother production through the year
- Improving the availability and use of fungicides and pesticides during the rainy season
- Increasing the availability of water pumps and spare parts for irrigation during the dry season

Improvement in marketing infrastructure could greatly facilitate transactions and price determination, and reduce product losses from excessive and rough handling of produce. The need for a wholesale market in Lusaka is a priority. Ndola and other cities should also be considered. Organization of rural assembly marketing in the main vegetable production areas also needs close and further consideration.

Lack of coordination among producers, wholesalers, and retailers is a major constraint on the smooth marketing of fruits and vegetables. Access by market participants to the rather well-functioning telephone system in Lusaka could enhance greatly the flow of information and market coordination. ZAMS should explore what improvements in information flow can be made.

ZAMS could also promote the emergence of commercial entrepreneurs out of the mass of unskilled participants in the market. To raise the efficiency of their operations, promising individual traders could be supported in making marketing-related investments. Existing market associations of traders and retailers could be supported in self-help undertakings to improve their current facilities by providing shelter, water, sewage, electricity, and telephones to their markets.

Training programs are recommended for farmers as well as for traders and marketeers to improve the quality, packaging, and handling of produce. The network of existing self-help professional organizations could be used as vehicles for training programs. Simple accounting, stock management, and business procedures have proved popular among small traders in other parts of the world.

It is recommended that a coordinating and marketing advisory unit similar to the one contemplated under ZAMS's project identification paper be charged with carrying out the necessary work to follow up on some of the initiatives suggested above. The unit could also support the several services and institutions involved in the marketing of fruits and vegetables.

Cassava, Millet, and Sorghum

The Zambia Agricultural Marketing Support (ZAMS) project identification paper selects cassava, millet, and sorghum (henceforth referred to as CMS) as three minor field crops with favorable prospects in the Zambian agricultural sector that ZAMS could help promote. One of the principal reasons why these crops were selected was that, so far, the state marketing agencies that pervade the rest of the agricultural sector have shied away from these crops.

The study team concludes that the prospects for promoting cassava, millet, and sorghum consumption and production through improvements in their marketing system are rather discouraging at present. Although these crops have been spared direct government intervention, they suffer the indirect consequences of official encouragement of maize production, marketing, and consumption. Some of the reasons why it does not seem advisable for AID to concentrate much effort on promoting the marketing of the CMS crops are detailed below.

Cassava, millet, and sorghum are truly minor field crops from the perspective of the national agricultural economy. Although in some regions each of these crops can be of some importance in production and in the diet, their overall value is dwarfed by maize. The three CMS crops together only add up to 133,000 hectares, or barely one-sixth of the 780,000 hectares planted in maize.

It is no surprise that these crops are basically subsistence crops that are consumed mainly within the producing household, and when sold, are traded mainly within the village or zone of production. Very little is traded outside the immediate region of production. Sales of sorghum in the 1988 harvest are expected to be 24,000 bags, or 9 percent of total sorghum production. For maize the marketed output is forecast at 11,200,000 bags, or 73 percent of overall production. In other words, for every kilogram of maize in the market there are 2 grams of sorghum. Sales of millet and cassava are even weaker than sorghum.

Maize is the crop that generates the most cash income, even among traditional farmers. Maize represents 60 percent of the total value of traditional agricultural production, followed by cassava at 11 percent. Millet contributes 7 percent and sorghum less than 3 percent. These figures are for the traditional sector; in the commercial sector, the importance of cassava, millet, and sorghum is even lower. Among traditional farmers, 55 percent of the maize is sold out, compared with only 9 percent of cassava, 8 percent of millet, and 4 percent of sorghum.

Official statistics on cassava, millet, and sorghum are too imprecise to make definite evaluations of past trends in area, production, and sales. It is even riskier to predict how these variables will evolve in the future, but the evidence indicates that production of these three crops has suffered a persistent decline in the past decade. Drought in the 1986-87 crop year might have shocked the authorities and traditional farmers into increasing plantings of sorghum and millet instead of maize in drier areas, but empirical evidence remains to be seen.

The relatively low importance of cassava, millet, and sorghum in farm production reflects a corresponding decline of these products in the regional diets. There is no empirical data on this, since the last detailed food consumption survey was done in 1969; however, there is ample anecdotal evidence that food consumption patterns have changed drastically over the last decade or two. The dominance of maize is a relatively recent phenomenon, slowly but steadily displacing other foods. Now, the substitution is nearly complete. Maize is the main ingredient in diets even in the Northern and Southern provinces, which formerly were accustomed to cassava and sorghum, respectively. Perhaps most poignant is the complete substitution of maize for sorghum in the manufacture of the traditional opaque beer, Chibuku, in urban areas. A similar substitution is in progress in rural areas.

Consumption of cassava is equally rare, even in the Copperbelt area, which used to produce and consume large quantities in the past. Now, the most common form of consumption are the cassava leaves, used in preparing relish for the nshima, that is, as a green vegetable. Only in Luapula and the Northwest provinces does cassava retain a major share of consumption. In rural areas in the Southern province, sorghum is still the preferred staple grain.

The usual explanation for the decline in consumption of cassava, millet, and sorghum is that these staples are inferior foods. Nutritionally these staples are roughly equivalent to maize in calories, but less rich in other nutrients, and taste preferences generally favor maize. Nevertheless, the high prices of these three products in urban markets, together with the decline in urban income levels in the past decade, contradict the view of CMS as inferior foods. More likely, their reduced consumption is the result of the lower prices for maize. Their drop in consumption is fully consistent with consumer behavior towards normal foods.

In contrast to the rather depressing performance of the CMS crops, maize production has made great and steady inroads in the past few years, mainly as a result of generous government subsidies. The competitiveness of cassava, millet, and sorghum with maize, their main substitute, has been affected by the many government policies and actions to achieve self-sufficiency in maize.

Maize producers benefit from incentives not offered to producers of cassava, millet, and sorghum. Credit, for example, is generously provided at negative rates of interest to maize producers. This is facilitated by the Cooperative Unions, which, as the sole purchasers of maize, can guarantee payment on loans. With the provision of credit also comes access to purchased inputs like fertilizers and farm equipment. Fertilizers are also highly subsidized by the Zambian government; the bulk of fertilizer goes to maize, and none to any of the CMS crops.

Large-scale modern maize farmers estimate that 70 percent of their costs are imported inputs. The Kwacha is overvalued by about 300 percent, which means they are paying only one-third of the real cost of those imported inputs. Their costs would jump by 133 percent if the Kwacha were valued

more realistically. By contrast, CMS producers hardly use any imported inputs.

Provincial Cooperative Unions store and transport the maize crop from collection points to central depots. Their costs are reimbursed by the central government. Farmers get 80 Kwacha per 90-kg bag without any discount for transport. NAMBoard takes the maize from the Cooperatives, stores it and transports it across the country to consumption centers. All expenses incurred by NAMBoard are absorbed by the national government. NAMBoard can then sell to millers at the same price paid to farmers.

All mills are nationalized. The government pays millers substantial subsidies for every bag of maize processed, so that they can sell to distributors at subsidized prices. The distributors themselves are mostly state-owned supermarket and shops, whose losses are also financed by the government. In the end, consumers can buy mealie meal in downtown Lusaka for less than the farmer was paid for the grain.

Neither storage nor transport of cassava, millet, and sorghum receive any help from the government. Traders interested in dealing in sorghum would have to pay for these services, which would redound in higher prices for consumers and lower prices for producers.

The obvious conclusion is that maize production, marketing, and consumption are so favored by government pricing and subsidies, that any crop that can be substituted by maize cannot remain competitive. The disappearance of cassava, millet, and sorghum consumption in urban areas, and to a lesser extent in rural areas, is directly attributable to these policies. As long as these pricing and subsidy policies persist, the outlook for cassava, millet, and sorghum will remain bleak.

Consumption of CMS crops has remained an important part of the local diet only in those areas of Zambia so remote as to be relatively unaffected by the maize policies of the central government. Whenever a farmer is able to acquire subsidized mealie meal on a regular basis, he will find it advantageous to sell maize to the government and then buy back his own family's needs at subsidized prices.

In areas with climate unfavorable for maize, such as the low-rainfall areas of the Southern, Western, and North-West provinces, sorghum and millet become viable competitors for maize because of their high drought resistance. But only the Southern province is expected to market a substantial amount of sorghum outside the province.

One of the principal uses of sorghum is the manufacture of the local beer, Chibuku. Beer brewing is only permitted in rural areas. In urban concentrations, the government has a state monopoly on the manufacture of beer, both the bottled kind and Chibuku. At the moment, the most likely potential market for sorghum is in the manufacture of Chibuku by National Breweries. The government is pressing the brewery to switch to sorghum as a potential way of saving on the subsidies on maize. The brewery prefers maize because of its cheaper price.

Use of sorghum in animal feeds is also a possible market in the future, but maize subsidies would need to be reduced considerably before it becomes possible. Right now, the animal feed industry is using corn bran by-products from the milling process as the principal ingredient in feed. Human consumption of sorghum and millet in urban areas is not likely to develop in the near future. The higher cost and consumer resistance make their reintroduction in the diet very unlikely.

Cassava production is concentrated in Luapula, perhaps the most remote province from the urban markets of Lusaka and the Copperbelt. The small amounts of cassava in Lusaka originate in the Western province. One existing market for cassava from Luapula and Northwest provinces is the export of dry chips to Zaire's southern Shaba area. This trade could possibly be expanded in the future given the high demand and prices for cassava in Lubumbashi. A quick study of this market potential should be worthwhile as part of ZAMS. Right now the main constraints seem to be the possible illegality of the trade on the Zambian side, lack of sufficient production from the mealy bug infestation, difficulties in transport between Luapula and Lubumbashi, and inadequate rural processing facilities for making cassava chips.

Other Crops and Initiatives

Sorghum for Chibuku Beer

A potential market for substantial quantities of sorghum exists in brewing Chibuku beer. National Breweries considers sorghum a preferable raw material to maize grain and would switch to 100 percent sorghum if they could obtain sufficient amounts of the requisite varieties at a price comparable to maize. A sorghum-based brew is preferred by the consuming public and would have a significant impact on consumption. The potential requirement for sorghum is about 27,000 tons per year. Given the low yields and small farm size of typical sorghum producers, this volume could affect a large number of small holders.

The present price of Chibuku beer is controlled at K 0.45 per liter, calculated to cover costs but no profit. This price does not allow the brewery to offer a premium to farmers for sorghum grain. ZAMS could explore possible financing support to National Breweries to upgrade their facilities to encourage use of sorghum and to induce the GRZ to deregulate the controls on a sorghum-based premium beer.

Preserved Fruits and Vegetables

A young private company, Rivonia, is the main producer of fruit and vegetable preserves and juices in Zambia. In six years of operation, it has grown to employ 60 semi-skilled workers. Its production is marketed directly to Lusaka supermarkets and food stores on a contract basis and through NIEC, a holding company of state enterprises, and Mwaiseni to other urban centers. Rivonia reports a good growth potential, but it is constrained at the moment by the inability to obtain foreign exchange to import essential processing

equipment, such as a sealing machine for canning. ZAMS could facilitate the foreign exchange necessary for importing the equipment, at an exchange rate compatible with that paid on dollars under the 50 percent retention for exporters.

Soft Drinks Industry

As a result of the dire scarcity of foreign exchange, Zambia has stopped the importation of syrups and concentrates for soft drinks; therefore, there is a potential demand for soft drinks using locally produced fruit juices and concentrates. The present availability of fruit for crushing -- oranges, grapefruit, and pineapples -- is extremely limited, and the location of production is far from consumption centers. At present, the demand for citrus in the smallholder sector far exceeds the seedlings available from provincial Ministry of Agriculture and Water Development (MAWD) nurseries. ZAMS intervention could help coordinate joint development of the industrial capacity along with smallholder production of fruit trees in strategic locations.

Groundnuts

Zambia used to be a major producer and exporter of groundnuts, and the Eastern Province contributed the bulk of it. Production and marketing of groundnuts have declined to a fraction of their levels of a decade ago. Exports declined from 4,000 tons in the early 1970s to zero in the 1980s. The main reason for the decline is the increasing imbalance between the price of maize and groundnuts. A minimum ratio of 3:1 in price with regard to maize is deemed necessary by producers to justify groundnut production. A small but encouraging recovery has been detected since 1985, when the marketing and export of groundnuts were freed. Until then, prices were controlled, and exports were the sole responsibility of the Eastern Province Cooperative Union.

ZAMS could help to re-establish the production and export of confectionery groundnuts by encouraging the traditional growers to produce the well-known Chalimbana or other varieties acceptable to the confectionery trade. Unfortunately, Chalimbana nuts no longer command their old premium in the international market. In fact, they are now discounted by as much as US $100 a ton, so that a switch in varieties should be explored.

ZAMS could also help in financing and establishing a privately run company to coordinate the production and export of groundnuts, including subcontracting of production, buying, and processing, while disposing of those which do not make export grade on the local market.

Fruit and Vegetables for the Export Market

This is a rapidly growing sector in Zambia. It takes advantage of the favorable climate in Zambia for the production of fruits, vegetables, and flowers during the off-season in Europe. Items include strawberries, green beans, okra, ginger, sweet corn, chilies, aubergines (eggplant), courgettes (zucchini), and gladioli. Exports are entirely in the hands of private concerns, after a disastrous attempt to establish a parastatal company, ZAMHORT, to do

the same. Constraints relate mainly to ready access to technical information and appropriate quality standards for producers. Regarding price competition. Zambia has lower labor costs than other regional producers and, at present, a discounted rate for air freight to Europe.

An export diversification project had already been identified last year by the World Bank, before Zambia's break with the IMF economic recovery program. The project included tobacco, groundnuts, cotton, beef, and fruit and vegetables. The concept of the project was to provide foreign exchange through commercial banks for short- and medium-term loans for the importation of equipment and inputs. These loans would be recovered from the export retentions. The project was put on hold when Zambia abandoned the IMF economic program. ZAMS could look into using its resources in a similar manner as outlined above.

Recently, the Bank of Zambia has approved up to US $12 million in pipeline debt to be dismantled in order to provide kwacha support for a horticultural export project. Under this scheme, local currency costs such as land clearing and on-farm buildings could be financed by producers wishing to enter the export market. Of course, if the foreign exchange is used for buying up debt, it cannot be used for importing equipment also.

Airport facilities for preshipment storage and handling are presently inadequate. Credit could be provided under the ZAMS project to an association wishing to invest in appropriate handling and cold storage facilities at the airport. These facilities are badly needed; exporters are not getting top prices, partly because of the decline in quality at the airport when the cool chain is broken.

Barley

Zambia Breweries is currently producing significantly below demand, and shortages are frequent. Lack of foreign exchange to import the malted barley is currently the greatest constraint to meeting demand. INDECO, a government parastatal and owner of Zambia Breweries, is anxious to substitute locally produced malt for imported malt.

Some large tracts of land in areas agro-ecologically suited to barley production have been set aside by government for large-scale commercial development. One of the main areas of priority for this type of development is in the Mpongwe valley where there are already a number of similar development projects, and where soils and irrigation potential are suited for barley production. Irrigated barley could initially be sent to Zimbabwe for malting, although provisions would be made to establish a malting capability once production warrants it.

Rice and Beans

Beans form a small part of the diet of most Zambians but are not traded in any substantial quantity through the formal market. High production in the Northern province probably reflects the lack of animal proteins in that region, but it is unlikely that the province is suited for cash production. More likely, the Eastern province would be more responsive to incentive pricing.

The main production area for rice is also the Northern Province, and to a lesser extent the Eastern and Western provinces. High prices of rice would indicate a good potential demand, but poor quality makes Zambian rice less appealing than the imported rice from Malawi. The problem is simply one of mixed varieties in the planting material, resulting in excessive breakage at milling.

Possible interventions by USAID to explore the market potential for rice and beans are warranted, because of their appeal and nutritional value. Specific interventions to promote growing rice and beans need to be identified.

VOLUME I. FRUIT AND VEGETABLE MARKETING IN ZAMBIA

194

TABLE OF CONTENTS

Chapter		Page
I.	INTRODUCTION	1
	Summary and Main Recommendations	1
	The ZAMS Project	2
	The Guidelines of the Report and Some Definitions	2
II.	THE PRESENT STATE OF FRUIT AND VEGETABLE MARKETING	4
	Domestic Fresh Fruit and Vegetable Marketing	4
	Fruit and Vegetable Processing	16
	Exports of Fruits and Vegetables	18
	The Fruit and Vegetable Marketing Channels	19
	Summary of the Main Problems in Marketing	19
III.	THE RECOMMENDATIONS	21
	The False Solutions	21
	The Recommendations in Consumption	22
	The Recommendations for Production	23
	The Recommendations for Marketing	25
	The Recommendations for Prices	28
IV.	CONCLUSIONS AND SUMMARY OF RECOMMENDATIONS	30
	Consumption	30
	Production	30
	Marketing	31

196

I. INTRODUCTION

Summary and Main Recommendations

Fresh vegetables are consumed everywhere in the country, with seasonal variations in supply and price. Fruit consumption is very low, subject to seasonal production. Nearly all farmers grow vegetables: there is no specialized market-gardening near the main towns. The production areas are in and near the consumption zones. Although the distance to markets is short, farmers have difficulties because of the poor maintenance of the rural roads.

Some rural assembly markets exist in the Copperbelt. In the larger towns, an empty lot is used as a wholesale market by farmers and by traders. Fruit and vegetable marketing is a free business; each marketeer has his work well delimited. Marketing concerns mainly the urban populations along the rail line and in the Copperbelt. Consumer prices have high fluctuations, because of irregular supply (depending on the seasons) and high demand rigidity.

Fruit and vegetables are exported to European and neighboring countries by a few farmers; this export trade concerns produce of high quality, in very small quantities. Zambia also has a small fruit and vegetable processing industry, with a few firms producing canned fruit and vegetables, preserves, and juices. The demand is low in the domestic market, and the processors are easily supplied with raw material by specialized farmers.

A study of the fruit and vegetable industry needs to be done in three parts, one for the fresh domestic market, one for the export trade, and one for the processing industry. Some of the actions recommended aim to reduce seasonability and other irregularities of production in quantity and quality, and to regularize consumption. Improvements of the market facilities are recommended, mainly for the rural assembly markets and wholesale markets. Different technical training is recommended for farmers and traders, individually and within their existing or new professional associations. A Coordination Bureau should be set up, charged with continuation of the studies, and organization and follow-up of the actions to be taken by existing services and organizations.

196

The ZAMS Project

USAID in Zambia requested this study in order to obtain the complete information needed for the Zambian Agricultural Marketing Support Project (ZAMS). The purpose of the ZAMS project is

> to improve the operational efficiency of the agricultural marketing system in Zambia for selected agricultural commodities, and promote market development as necessary.[1]

The selected commodities include fruit and vegetables.

The project goal is to increase agricultural production and rural incomes through improvements in the marketing system for agricultural outputs and inputs, mainly by supporting and strengthening the activities of private entrepreneurs in marketing.

The Guidelines of the Report and Some Definitions

The Different Marketing Processes

Fruit and vegetable marketing in Zambia needs three different studies, according to the types of production and producers, the marketeers and their marketing roles, and the demands of the different consumers:

1. Domestic marketing of fresh fruit and vegetables, which concerns many different producers and the entire population as consumers
2. Fruit and vegetable processing and the marketing of the processed foods, which are new products with high value added requiring special marketing processes
3. Export marketing of fresh fruit and vegetables (and flowers), requiring special quality products and well-organized farmers and exporters

The Marketing Functions and Operations

Marketing is an aggregate of three inseparable processes:

- The transfer of goods like fruits and vegetables from producer to consumer

---

1. Zambia Agricultural Marketing Support Project (ZAMS: 611-0214), Project Identification Document, March 1988.

- The transfer of the value of these goods from consumer to producer and others participating in the marketing process

- The permanent transfer of information from consumer to producer, and producer to consumer

These operations require certain kinds of infrastructure and capabilities. The main kinds of infrastructure are roads, markets, and storage facilities; some capabilities necessary are communications and transport with packaging material.

The marketing operators are

- Producers, whose first task is to produce according to the demand and to put the produce on the market

- Traders and other economic agents, who perform the services of transferring the goods and participate in the distribution of the value and the wealth

- Consumers, whose needs are tempered by their purchasing power, determining the level of demand

The Commodities

This study includes all fruit and vegetables as well as other basic components of the diet that are marketed with fresh vegetables by the same marketing agents in the retail market, like dry beans, fresh groundnuts, and mushrooms. Most of these commodities are perishable items, and this perishability influences the lines of the marketing processes.

Perishability and Post-Harvest Losses

All the fruit and vegetables included in this study are fragile and highly perishable. They are susceptible to many external factors. Their shelf life is a few days to several months. Losses usually are caused by rotting (bacteria, fungi), senescence, sprouting, withering, and bruising.

In less developed countries, losses in horticulture crops are usually estimated to range from 15 to 50 percent. These losses are always lost for everybody in the marketing process: for the producer who receives a price taking into consideration the foreseeable losses, the trader who may lose his profit margin, and the consumer whose buying price includes all losses in the marketing process.

Any element in production, harvest, packaging, transport, and trade organization that may minimize the losses has to be considered.

II. THE PRESENT STATE OF FRUIT AND VEGETABLE MARKETING

Domestic Fresh Fruit and Vegetable Marketing

Consumption

Quantities

The quantities of fruit and vegetables consumed are very difficult to assess because there is no record of production and consumption. The last study that gives some information on the consumption is the Household Budget Survey carried out in 1985. The figures are difficult to interpret for fruit and vegetables. The survey gives the expenditures in cash for households with different incomes and from different sites in towns and in rural areas.

The expenditures for fruit and vegetables vary from one household to another. The high inflation rates from 1985 make it difficult to obtain precise data; a rough calculation shows that the amount expended for fruit and vegetables is about 10 percent of the expenses for grains, including bread and mealie meal. Using an annual consumption of 800,000 tons of maize at 80 ngwee/kg, we obtain a consumption of about 125,000 tons of vegetable at an average price of K4/kg, or 17 kg per capita per year.

In the study of vegetable production and marketing on the Central Plateau in Northern Province, consumption is estimated at 23 to 32 kg per capita per year. It is reasonable to keep the mean of 20 kg, and a global consumption of 140,000 tons per year.

The consumption of fruit is much lower, and given, in the same study, as 1 percent of vegetable consumption -- 1,400 tons a year, or, with a higher consumption in the urban areas, about 2,000 tons a year.

The point of these rough figures is to give the average amount of fruit and vegetables produced and marketed by the numerous farmers and marketeer involved in this business. It is difficult, however, to differentiate the consumption in urban and in rural areas.

Uses of Vegetables

Zambian food consists mainly of two items, nshima and relish, a cooked sauce made out of vegetables and meat or fish or beans. Nshima is always eaten with a relish. Some vegetables are always necessary for relish — mainly leaves (rape, pumpkin, cassava), tomatoes, onions, okra, and potatoes. That explains the very high price of vegetables when there is a shortage: the housewife will buy at any price. (That in turn explains the sale by unit or small heap.) Other vegetables, like sweet potatoes, and fruits are used as snacks beside nshima and relish.

Supply

All fruit and vegetables consumed in Zambia are produced domestically; the climate, the soil, and other agricultural conditions are favorable almost everywhere. There is no importation.

Quantities

No figures are available on the area devoted to vegetable production, and the agricultural statistics do not give the quantities harvested. There is no record of the acreage of orchards, or the number of scattered fruit trees around farmers' houses.

Production Areas

Except for dry beans and groundnuts, no specific area is devoted to special production of fruits or vegetables. Climate, soil, and other agricultural conditions are quite similar nearly everywhere in the country and adequate for growing vegetables. The lack of a greenbelt and specialized market gardening in the suburbs of the towns, however, is surprising.

Dry beans are produced mainly in the Northern Province. Other fruits and vegetables for marketing are produced in and close to the consumption areas. Transport of produce from one production-consumption area to another is not frequent. Some production areas far from consumption zones are devoted to a special consumption zone; for example, the Mumbwa-Chikanda production area, more than 100 kilometers from Lusaka, is one of the major supply areas for Lusaka. It is supplying only this town; there is no technical reason for this situation.

Seasonability of Production

Although the climate is favorable for year-round production of vegetables, irrigation needs in the dry season and the easy development of diseases in the hot rainy season make production much more difficult. The farmers producing vegetables also grow maize and other cash crops and breed cattle. Even if they can make a good profit on the vegetable crop, they do not have the equipment and technical ability necessary for all-weather production.

100

The seasonality of vegetable production and consumption is high. In the towns, it is less seasonal because of the diversity and the great number of suppliers, but it exists.

Quality of the Produce

Some commercial farmers produce good quality fruit and vegetables for export, for processing, and also for the domestic market. The quality of production overall, however, is much less even, with irregular sizes and shapes, and inefficient techniques of disease prevention. The marketing techniques of scattered small and middle-sized farmers do not improve or minimize this irregular quality. Farmers harvest at different stages of maturity, produce is not always sorted before packing, and packages and the way they are used do not help maintain quality.

Production Costs

Reasons for and Problems with the Study

A good knowledge of production costs helps the farmers in their decisions for production. The public authorities need also to be acquainted with the economic interest of production, in order to take, if necessary, some political steps to rationalize production in the entire agricultural economy.

The costs of vegetable production in Zambia are very difficult to establish for several reasons:

- The different farming systems, commercial farmers and small and middle-sized farmers, have different costs of production for the same commodity.
- Depending on the size of the farms and the vegetable fields, the shares of household women and external labor in vegetable production are different and difficult to estimate.
- Some vegetable are grown as intercrops, like pumpkins and beans in maize fields.
- The value of leafy vegetables is difficult to establish; cassava, beans, and pumpkins are picked according to the market demand.

Estimates

Theoretical calculations of the costs of production of some fruits and vegetables are possible, based on simplified assumptions about the costs of the different agricultural tasks, and average yields in different regions of the country. These figures might be sufficient.

It might also be useful to know the farmers' estimates of their costs of production and what they consider a reasonable minimum selling price. The

figures vary greatly from one farmer to another (10 to 30 kwachas for a tomato crate in April 1988), but even in these conditions, this information might be useful.

Marketing Operations

Infrastructure and the Means

Infrastructure is the facilities that the marketing operators use to organize the processes. Infrastructure can be provided by state and public institutions, like roads, or by private individuals or associations, like stalls and stores.

Roads. In Zambia, the tar roads linking the regions and the main towns are in good condition; so are the main roads in consumption-production areas and the roads from special production centers to the towns. From the main roads to the vegetable farms, however, most of the rural roads are in very poor condition, often unusable in the rainy season. Truckers refuse to drive on some of them for fear of damaging the trucks. In other areas, with primarily small farmers, the roads cannot be used by trucks and pick-ups. Farmers have to convey their produce to the nearest main road using head haulage or oxcarts. All these rural roads are very important for vegetable production, because they are very numerous, and they are short. As soon as produce is brought out of a rural road it has nearly arrived in the consumption market.

Trucks and Other Transport Means. It seems that there is no shortage of trucks on the good roads, and even on the rural roads, but truckers refuse to go to the farms, even at high prices, when road conditions are too bad. So there is a shortage of transport means in the rural areas, depending mainly on the quality of the roads. Small farmers, however, have no means of conveying their production to an assembly point, or to the nearest village or town.

Packages. For transport and sale, fruit and vegetables are packed in wooden crates and in bags. Wooden crates are used mostly for tomatoes, one of the most fragile items. The crates are manufactured by individual carpenters, from boards of varying thicknesses; their sizes vary slightly from one to another, creating some difficulties in packing the crates correctly in trucks. These crates hold 15 to 18 kg of tomatoes. Usually the crates belong to the farmers. After sale in the wholesale market, the retailers pour the tomatoes into other packages like baskets or metal tins, with not much care, and give the crates back to the farmers.

Bags of different qualities and sizes are used for most other fruits and vegetables. They are of different origins: fertilizer bags for leafy vegetables (rape, pumpkin leaves); jute bags for heavy vegetables; plastic net bags for smaller quantities of the same vegetables and for fruit, citrus, and avocado pears.

Physical Markets

As a general rule, market facilities are built by public institutions, and township councils. Sometimes they are built and organized by traders associations. They are not always officially authorized to operate.

Village Markets. Some village markets exist in Copperbelt villages with sufficient vegetable production. The farmers bring their production to be sold to traders who come from the towns. These village markets operate once or twice a week; the days that they operate are distributed throughout the week.

There is no such market in the production area, even in the relatively far away Mumbwa area, which is one of the most important for Lusaka. As explained in Chapter III, this lack of markets could be the result of ZAMHORT's attempt, in 1978-80, to establish rural assembly markets as a means to collect small farmers' production.

Wholesale Markets. Places where the fruit and vegetables are sold wholesale exist in some big towns, in Lusaka, and in the Copperbelt region. The facilities of these so-called wholesale markets are nonexistent; the markets are simply cleared land where some wholesaler has set up shop.

The Soweto Wholesale Market in Lusaka. The Soweto market in Lusaka is a combination of different markets, including two wholesale markets — one legal, the other unrecognized -- a consumers market, selling food and all other commodities, and an area with a gathering of illegal street vendors.

The first wholesale market was designed and built beside the retail market. Shelters and stalls are used by wholesalers and petty wholesalers to store bags of heavy vegetables, potatoes, sweet potatoes, onions, and groundnuts, and some daily crates and bags of the most perishable items like tomatoes, cabbages, and oranges. They sell vegetables to retailers, street vendors, and consumers.

The expansion of the town, along with an increase in the number of traders crowded the first wholesale market. Some wholesalers shifted their operations to another location nearby. At this site, the vegetables are unloaded from the trucks and marketed without further handling. The farmers usually sell in bulk to a wholesaler who later sells to retailers, or the farmers may sell to commission agents. Petty wholesalers sell fruit and vegetables bought from farms or other traders at this site.

The site is relatively large and has assigned locations for the main commodities. But the location for this wholesale market is not authorized; no committee or institution supervises it. The cleared, uneven land has no facilities and it is never, or very rarely, cleaned. Discards and spoiled vegetables rot on the soil, and the site is dirty and unsanitary; there is no shelter to protect vegetables, fruit, and people against sun and rains; in rainy seasons the soil is muddy and several hollows are full of stagnant water. Nevertheless, dealings are very active the year round, and any simple improvement will be very useful.

Fruit and Vegetable Retail Markets. Specialized markets for fruit and vegetables exist, often beside markets for other perishable foods like fish and meat. Such markets have been set up in areas of very high population, or near large compounds; because of the scattering of houses or compounds in the towns, each town has numerous markets. A report entitled *Marketing of Vegetables in Lusaka* in 1987 indicated 69 markets in the town. Out of the 69, only 21 have been designed and recognized by the Lusaka Town Council. The others have been set up or built by traders individually or in associations.

Under these conditions, the markets have different designs and management, adapted to the compound or the ward, the size of the population around, and the average income. Many markets are built of concrete and have stalls and tables, and are well maintained, while others are simple rows of corrugated iron shelters. Some are run by Town Council Market Committees, others by traders cooperatives or unions. They are cleaned regularly, even where the proper facilities (water taps, sewerage) do not exist.

Other Marketing Tools

The telephone is not used by the marketeers. The farmers, more often than not, come to the wholesale market in the towns. Also, the quality of the produce obliges the retailers to look carefully before purchasing any.

Scales are not used in the wholesale markets, even in Lusaka in the Kamwala market, which is the wholesale market for dry beans, groundnuts, and dried fish. In a few retail markets, scales are used either for direct sales or for preparing preweighed packets.

In the marketing process, storage is an indispensable tool for regulating the supply and adapting it to the demand. In Zambia, the storage of fruit and vegetables is not efficiently utilized to take advantage of the possible year-round production of most of the vegetables. Nevertheless storage is used for a few vegetables that can be stored cheaply and relatively easily, like onions and potatoes.

Refrigeration is the best means of storage for perishable fruit and vegetables. It is not used for domestic marketing mainly because of its high costs for investment and for use in the retail markets (since many traders deal with only small quantities of produce).

The farmers who export some fruit and vegetables to European countries are equipped with their own cold stores, as a part of the complete cold chain necessary from the farmers to the consumers, with, at present, a gap created by the lack of cold storage facilities at the Lusaka Airport.

Marketing Agents

Marketing agents are

- The producers whose way of bringing their produce to the market initially may influence the whole of the marketing process

- The traders in each step of the transfer of the produce from producers to consumers
- The consumers whose special habits and purchasing power create the demand and influence the shape and the main lines of the marketing process

In Zambia, it seems that all farmers produce some vegetables, either for the market or for their own consumption. Even in the vicinities of the main towns, there is no market-gardener, no farmer specializing in vegetable production, or producing only vegetables.

For fruit and vegetable production and marketing, farmers may be distributed roughly within four main categories, without precise limits between them: commercial farmers, middle-sized producers, small-scale producers, and no-vegetable producers. The farmers of the first three classes produce vegetables for the market; farmers of the last class sell, in rural areas, some vegetable surplus of their production for domestic consumption.

The Commercial Farmers. Commercial farmers run large farms, of a few hundred to few thousand hectares of land, mostly along the Line of Rail, and in some other designated areas (Mkushi). Most of these farmers are foreigners, settled for some length of time. They farm mostly maize and cattle, applying modern techniques of intensive agriculture.

Besides maize and cattle, some commercial farmers produce vegetables and fruit, under varying conditions. Some farmers supply fruit and vegetables to processing plants in urban and industrial areas (see Chapter II). Close to the towns, some farmers produce fruit and vegetables for exporting to developed countries (see Chapter II). Farmers producing for export trade and for processing bring vegetables, discards or surplus from their normal outputs to the nearest markets in the towns, where the quality corresponds to the normal demand.

Other commercial farmers close to the main towns, especially Lusaka, produce fruit and vegetables for the domestic market for fresh produce. They are able to produce high quality vegetables and limit the varieties to those vegetables for which consumers have a high demand, like tomatoes, cabbages, potatoes, and onions. Most of them sell their produce at their farms or in shops in town, to numerous traders, often supplying them with the necessary transport to the main market (Soweto market in Lusaka).

The commercial farmers producing fruit and vegetables for the domestic market are very well organized. Their fruit and vegetable production and sales represent a small part of their agriculture business, but the quantities of some commodities they bring to the market (potatoes, onions, oranges) might have a high impact on the market during certain periods.

The Middle-Sized Vegetable Producers. Middle-sized farmers and small-scale farmers produce vegetables and fruit for the domestic market in about the same technical conditions. Their farms are scattered in production areas

in or close to the consumption areas where they market their produce; in rural areas, more distant from a town, their produce is usually assigned to the market of the town.

Middle-sized and small-scale farmers producing vegetables differ mainly in the areas they plant to vegetable production and in their ways of marketing. They usually have more land than they are able to cultivate: they grow maize as a cash crop and staple food. and other cash crops -- mainly cotton and sunflower, and in smaller quantities, sorghum, groundnuts, and soyabeans. Most of them breed cattle. They produce the best-selling vegetables, tomato, rape, cabbage, onion, sweet potato, chili, and as intercrops in the maize and sorghum or cassava fields, other vegetables like pumpkins (for fruit and leaves), beans, cucumber, and other squash.

Middle-sized vegetable producers may be defined as those farming more than half a hectare of vegetables, employing family members and outside labor. They have little equipment -- ox-drawn farm equipment, some irrigation pumps and devices -- often in bad condition or out of order because of the unreasonably high prices and scarcity of spare parts.

At harvest time, because of the size of their production, they are often in a position to hire a truck or a pick-up to bring their production to the market. Some traders-wholesalers from the town can come to the farms to buy the harvested produce. Some farmers have their own vehicles to transport their produce to market and also can buy the produce of their neighboring small farmers at "market price"; in this way, they are also traders.

The Small-scale Vegetable Producers. Small-scale vegetable producers grow vegetables in fields of less than half a hectare, farming with family labor. They may have irrigation devices (all those we saw were out of order), but most grow vegetables in the dry season only near boreholes, and avoid production during the hot rainy season because of their lack of technical knowledge regarding diseases and pest control, and their lack of equipment and necessary inputs.

They sell their vegetables to small traders coming from the town, or use any device for bringing the vegetables out of the fields -- head haulage, oxcarts -- to the town market or the nearest point in the next good road. Usually the next good road is the main tar road, because of the poor maintenance of the rural roads. Once the farmers arrive at the main road they expect to hire passing trucks to transport the produce to the town market. Some truckers specialize in this type of transport along the main roads in the vegetable production areas, and they collect produce and producers in different spots.

But this transport is not regular, and producers may wait for the trucks a few hours, or the complete day, with the vegetables lying in the sun. Then they go the market, wait until the early hours of the day, and sell their produce to wholesalers or retailers, sometimes through commission agents, and go back to their farm with empty boxes or bags. Sometimes traders from the town market go to the production areas and buy the produce from the farmers at the farm or the small assembly points along the tar roads.

It seems that there is no organization of the farmers and the traders which might decide whether the farmer is going to the town or the trader to the production area. The traders would mostly go to the farm when there is a vegetable shortage, but even in these circumstances, the farmer might also decide to go to the town; in some areas, there is a complete lack of agreement between traders and farmers on this first step of marketing.

The farmers think that they obtain a better price from the traders in the town, because of competition between the traders, but mainly because the traders have to pay for the transport. But the farmers do not take into consideration the time spent on the road awaiting the truck, or in the market awaiting the trader, time that could be very much better used on the farm. They also do not consider the deterioration of the produce after a few hours in the sun or the rains.

The Non-vegetable Producer. The fourth class of fruit and vegetable producer is the farmer who does not specialize in vegetable production but grows vegetables for family consumption. This production is most often undertaken by family women, on a small scale; in full production season, the surplus vegetables are sold at a low price in the nearest market, in the village or the town to traders, or directly to consumers.

This situation exists mainly in rural areas, near the villages. The quantity of vegetables sold in these conditions is not known, but could have a certain impact on the supply of the markets in villages, and even in towns, during the full production season. This situation could increase the surplus over the demand, with the attendant consequences on the price paid to all the farmers, including specialized vegetable producers.

The Farmers Cooperatives and Associations. Except for export, with ZEGA (Zambian Export Growers Association), there is no coordination of farmers with resources to help them market their fruit and vegetable production.

The Traders. In any marketing process, the traders perform or participate in three main operations:

1. The physical transfer of goods from producer to consumer in a way to keep the produce in the best condition. That is very important for perishable items like fruit and vegetables, and means traders must avoid touching the produce; they have only to transport the packages with the produce as quickly as possible from the producers to the consumers.

2. The transfer of the value of the good from the consumer to the producer and, on the way, the distribution of part of the value to the marketing agents -- retailers, wholesalers, and truckers. The shape of the marketing process and the participation of more or fewer traders leads to different distributions of the value, and may

206

transform the social position of the participants. For example, more traders in the production areas, which is not the case in Zambia, help maintain more wealth in the rural areas than if all the traders are urban, even if they go to the farm to purchase the produce.

3. The permanent transfer of information from producer to consumer and vice-versa, on general supply and demand, and more practically, instant or quick information to the farmers on the supply in the market and fluctuations in prices, or even the availability of trucks, or vegetable supply from other areas.

The Traders in Rural Areas. Very few traders live in rural areas, even if a village market exists. Most of them are also farmers, and while marketing their own produce, they buy the produce of their neighbors either in their farms, or in the market, or along the roads.

The Wholesalers. Wholesalers are installed in the existing wholesale markets in the town. They are middlemen between farmers and retailers, and sometimes petty wholesalers. The facilities are bad or nonexistent in the so-called wholesale markets; the wholesalers would pay higher fees for better organizations.

The wholesalers purchase the produce from the farmers, and a few village traders, either going to the village market or to the farms, or along the roads, or in the wholesale market itself. Some wholesalers have been dealing with this business for many years; they specialize in seasonal produce, changing with the season, and often have long-standing arrangements with certain suppliers (farmers) and buyers (retailers).

The Commission Agents. In some markets, such as the Soweto wholesale market, farmers may sell their produce to retailers with the help of commission agents. The commission rate is 7.5 percent, or sometimes a fixed amount per unit.

The Petty Wholesalers. Petty wholesalers operate in the Soweto market in the area previously allotted to the wholesalers. They purchase fruit and vegetables from the farmers, in the farms or in the market, or from the wholesalers, and sell to retailers, street vendors, and consumers, at varying prices.

The Retailers. Retailers are the last traders in the marketing process in contact with the consumers. They are installed in fresh fruit and vegetable retail markets, legal or unauthorized, with stalls for which they have to pay daily or monthly fees. They are mostly women; some men are also regular retailers, and some are only in the business temporarily. The retailers are very numerous, dealing most often with small volumes. Some are very well organized, have been established for a few years, and handle quite large quantities of various fruits and vegetables.

The retailers purchase the produce either from the wholesale market or from the farms, where there is no wholesale market or where they are nearer to the farm. They organize and pay for the transport to and from their market; this sometimes represents, like in Lusaka, long distances and high costs.

The retailers usually organize the supply daily, because of the perishability of the produce, the lack of storage facilities, and a frequent shortage of funds. They usually go very early in the morning to the wholesale market, or to the farms or other far supply points; sometimes they go in the evening. They prepare the produce for sale to the consumers, washing or wiping if necessary, binding bunches of leaves, weighing some units in small bags, or building small heaps on the tables.

The supermarkets that sell some fruit and vegetables are a type of inefficient vegetable retailer; the produce in the state store is the least appealing seen in the market.

The Street Vendors. Street vendors exist in all the towns, more or less numerous according to the efficiency of the police, who try, from time to time, to stop their unauthorized activities. These women or children sell fruit and vegetables of inferior or poor quality in the most crowded streets and near bus stops. They sell the produce in small heaps or units, which are convenient for low income people. Their business is small, and their margins doubtful; if they make any profit it is usually small, but they earn some ngwee or kwachas from time to time. Street vendors represent more a social fact than a participation in the fruit and vegetables marketing processes.

The Traders Associations. In several markets, traders, mainly retailers, have formed groups, associations, and cooperatives for different targets, mostly for setting, organizing, and running the markets. These associations look active.

The Consumers. In the rural areas and most probably in most of the towns and villages away from the Line of Rail, the people eat vegetables according to the season, with less production and consumption in the dry season and the rainy season. During these periods, more stored and dried vegetables might be consumed. In urban areas, in the large towns, the consumption of vegetables is more regular year-round, but there are always variations in supply from the producers, and consequently, fluctuations in prices.

Consumers purchase perishable fruits and vegetables daily, because they do not have home storage equipment (refrigerators). During the period of full production, with very low prices in the market, they cannot buy additional quantities and avoid losses. The traders know that there is a limit to the practical purchase, and they know that lowering the price will not increase consumption. This situation brings back to the farmers any losses because of production in excess of demand.

Consumers need mostly certain types of vegetables for the relish (nshima) that is necessary with the main dish. Even when the prices of these

vegetables increase, they purchase them, although sometimes in smaller quantities. There is never a shift in demand from a very expensive vegetable to one that is cheaper, but less adapted to the dishes. That explains seasonal high prices for some vegetables, and the sale of any quality of vegetable, as well as the street vendors selling units or very small heaps of low quality vegetables at relatively low prices.

Others Intervening in the Marketing Process

Public Authorities. There are no special commerce regulations and laws applicable to fruit and vegetable marketing. This business is free and there is no special institution looking after it: not the Department of Internal Commerce in the Ministry of Commerce, or in the Ministry of Marketing and Co-operatives. The only supervision comes from the UNIP responsible and the Town Council Market Committee, and that takes place in the markets, not in the marketing processes.

External Aid. There is no project providing direct assistance to fruit and vegetable marketing, to the private marketers individually or in association; but the numerous projects for agricultural development and increase in production must take into consideration the demand of the new or increased production and the marketing organizations necessary.

Prices

Within the general agricultural produce price policy, the main staple crop, maize, has fixed prices and a special marketing organization. The other minor crops have fixed floor prices. The prices of fruit and vegetables are free, fluctuating according to the general law of supply and demand, altered by the quality of the produce and the way of life of the people.

Price Fluctuations

A few information and price statements show that vegetable prices have wide fluctuations from season to season, or month to month or even from day to day. In the frame of the law of supply and demand, these large fluctuations can be attributed to three main factors:

1. Irregular variabilities in the quantity and the quality of the production of the main produce demanded.

2. Frequent misunderstandings between farmers and traders with consequences on the marketing costs and the quality of the produce.

3. High rigidity of demand: consumers need some special vegetables for relish, and buy these vegetables at any price; there is no shift to a cheaper commodity. When the vegetables needed are in abundance in the market, the demand remains at the same level, because of the lack of home storage facilities, and the shortage of daily purchasing power.

Prices are often different from one market to another, and from one season to another, according to the wholesale prices, the quality of the produce, and the quantity and quality of consumer demand, which differs in different urban areas according to the consumers' purchasing power. The gross margin of the retailers also fluctuates because of the same factors, and seems usually very high. This situation is due partly to the perishability of the produce and the lack of adapted storage facilities.

Prices are fixed freely by the retailers, according to the quality of the produce and the competition; but in some markets, vigilantes or someone in authority tries to impose a fixed price, creating a mess and discouraging the traders. A fixed price may not have any effect. because the price is fixed for a unit (bunches, heaps), but the unit fluctuates according to the quality and the retailer purchasing price.

Fruit and Vegetable Price Records

Price statements and records of prices at the farm-gate level and in the retail market are usually of interest for the public authorities, and the farmers, for organizing production. They do not exist in Zambia Some partial elements that do exist are difficult or even impossible to use because of the permanent high inflation for the last few years.

Breakdown of the Prices

Any study of the components of retail prices to estimate at least the traders' gross margins, their benefit, the other marketing costs, and the producer farm-gate prices is worthwhile for a good knowledge of the quality of the marketing processes. But proper calculations require a complete and detailed knowledge of these marketing processes and the quality of the produce concerned. At present, the marketing processes of fruit and vegetables are not well enough known to allow a comprehensive study of fruit and vegetable prices, and of the share of each participant in the final price for the consumer.

Fruit and Vegetable Processing

A special study is needed for fruit and vegetable processing, separate from the one for fresh fruit and vegetable marketing, because of special production and different marketing processes. Investments for processing plants need economic studies estimating production based on a regular supply of raw material. This regular supply is assured only by contracts with farmers, with a strict schedule for fixed quantities, at fixed periods.

The contracts between farmers and processing plants fix a price which is rarely bound by the prices of the same commodities in the fresh market. The processing of fruit and vegetables usually adds a high value to the produce (ingredients, labor, containers). The price of canned vegetables in Lusaka is three to five times the price of fresh produce; only the high

income population can afford processed fruit and vegetables, and that is only a very small part of the population, even in urban areas.

The quality demanded for processing is frequently different from the quality accepted for the fresh market (different sugar or acid or dry matter content). Processed foods do not use the same marketing processes as fresh fruit and vegetables; they are storable products, with long shelf lives (a few years), and are sold with the dry groceries.

Fruit and Vegetable Processing Business in Zambia

Several small processing plants exist in Lusaka and the Copperbelt. Two of these are described in Volume III of this report.

Demand

Figures do not exist for the demand for or the actual purchase of manufactured products. These products are very diversified: fruit, vegetables (pure or mixed with other food such as meat or fish), preserves, concentrates, juices, and jams. Consumption in the domestic market is limited by the availability of the fresh produce, and the high price of processed fruit and vegetables limits their consumption to the high income population.

Supply of Fresh Produce to the Processing Plants

Processors usually sign contracts with producers for a regular supply of the necessary special produce. Small quantities of fruit and vegetables are purchased in the fresh produce market, without impact in that market. The total processed raw fruit and vegetables could range from 2,000 to 3,000 tons a year.

The Surplus of the Fresh Market

The surplus of fruit or vegetables in the fresh market is always seasonal and difficult or impossible to anticipate. A processing plant cannot be built to use an unforeseen production. Processing is never, or only exceptionally, a means to absorb seasonal gluts of fresh fruit and vegetable production.

Sun Drying

Sun drying and other local or familial processing of fruit and vegetables for domestic consumption is used for okra, mushrooms, vegetable leaves, tomatoes, and chilies. Sun drying is one of the simplest ways to store vegetables and extend the period of consumption, especially in rural areas, where production is seasonal. This technique needs to be applied carefully in order to retain most of the nutrients.

Exports of Fruits and Vegetables

The export of fruit and vegetables needs a special study, separate from the fresh fruit and vegetable domestic market, because the export trade requires special production, special produce, and special marketing organizations. This is also true for export to the neighboring countries.

Export to Developed Countries

The export of fruit and vegetables to developed countries is limited to a few items of very high value, because of the need for air transport at very high costs, and for special packaging. Exotic fruits are exported, but most exports are fruit and vegetables that are off-season in Europe and other developed countries. They must be of high quality to compete in those markets with produce from the rest of the world.

Most of the demand concerns special produce, like green beans, sweet corn, aubergines, and courgette, for which there is little demand and consumption in the domestic market, even for the discards of the necessarily severe sorting. Production of this produce requires high technical ability.

The export of fruits and vegetables from Zambia to European countries amounts to 600 to 700 tons a year; most of it is produced by a few well-organized farmers. In the last 10 years, several studies have been carried out on this subject.

Export to Neighboring Countries

An export market exists with neighboring countries for some fruits and vegetables normally produced and consumed in Zambia, like potatoes. Good quality production and the export trade have to be carefully organized.

A successful export trade needs organized marketing channels and permanent contacts between producers and regular traders, their customers and consumers in the importing countries. For example, a trader or a group of farmers from Zambia who would like to export potatoes to Angola must keep contacts with traders in Angola and obtain information on the demand in quantity and quality, and must be sure, by contracts, that the quantity and quality demanded would be available from the Zambian farmers, at the right time, even accepting price fluctuations. Then, a special production must be assigned to this export trade, whatever the level of price in the domestic market and in the foreign country.

As a deduction from the previous paragraph it is assumed that the export trade is not a solution for seasonal surpluses in production, even if occasionally part of the domestic production is used to increase the exported quantities, in an export market that is already organized.

The export trade of fruit and vegetables with the neighboring countries is

not very important and depends very much on the fluctuating economic situations of the countries concerned. Only a few farmers-traders are involved in this business. Volume III contains complementary information.

The Fruit and Vegetable Marketing Channels

Figure 1 shows the main marketing channels for fruit and vegetables in Zambia for the domestic fresh produce market, for processing, and for export trade. The diagram of the process is unusual, compared with those of other countries where the marketing operators are more numerous, and the products grown in specific areas are needed in urban consumption areas that are closer or farther away from the production areas.

In Zambia, each zone with a concentrated urban population has its own fruit and vegetable production area and the transfer from one "region" to another is not very frequent.

Summary of the Main Problems in Marketing

Half of the Zambian population lives in urban and industrial areas, in the Copperbelt and along the Line of Rail. Fruit and vegetable marketing concerns mainly this urban population; in rural areas, the population is more self-sufficient.

For the urban market, the vegetable producers are in or near the towns and they bring their production to the town wholesale markets. They have transport problems because of the poor conditions of the rural roads near their farms. In the bigger towns, wholesalers operate on sites called "wholesale markets" but not at all equipped for that. In the retail markets, many traders have formed associations that could be useful for implementing improvements in the marketing processes.

The consumers in towns have vegetables, with variations, all year around, but the prices fluctuate frequently and widely. The fluctuations could be reduced by providing the farmers with technical training and the necessary equipment and inputs at the right time. In rural areas, consequences of the seasonality of the vegetable production could be reduced by storage or sun drying of some produce.

Many characteristics of marketing are difficult to determine, because of the population is scattered in vegetable production areas or in towns; several studies have to be completed.

Figure 2

FRUITS AND VEGETABLE MARKETING CHANNELS IN ZAMBIA

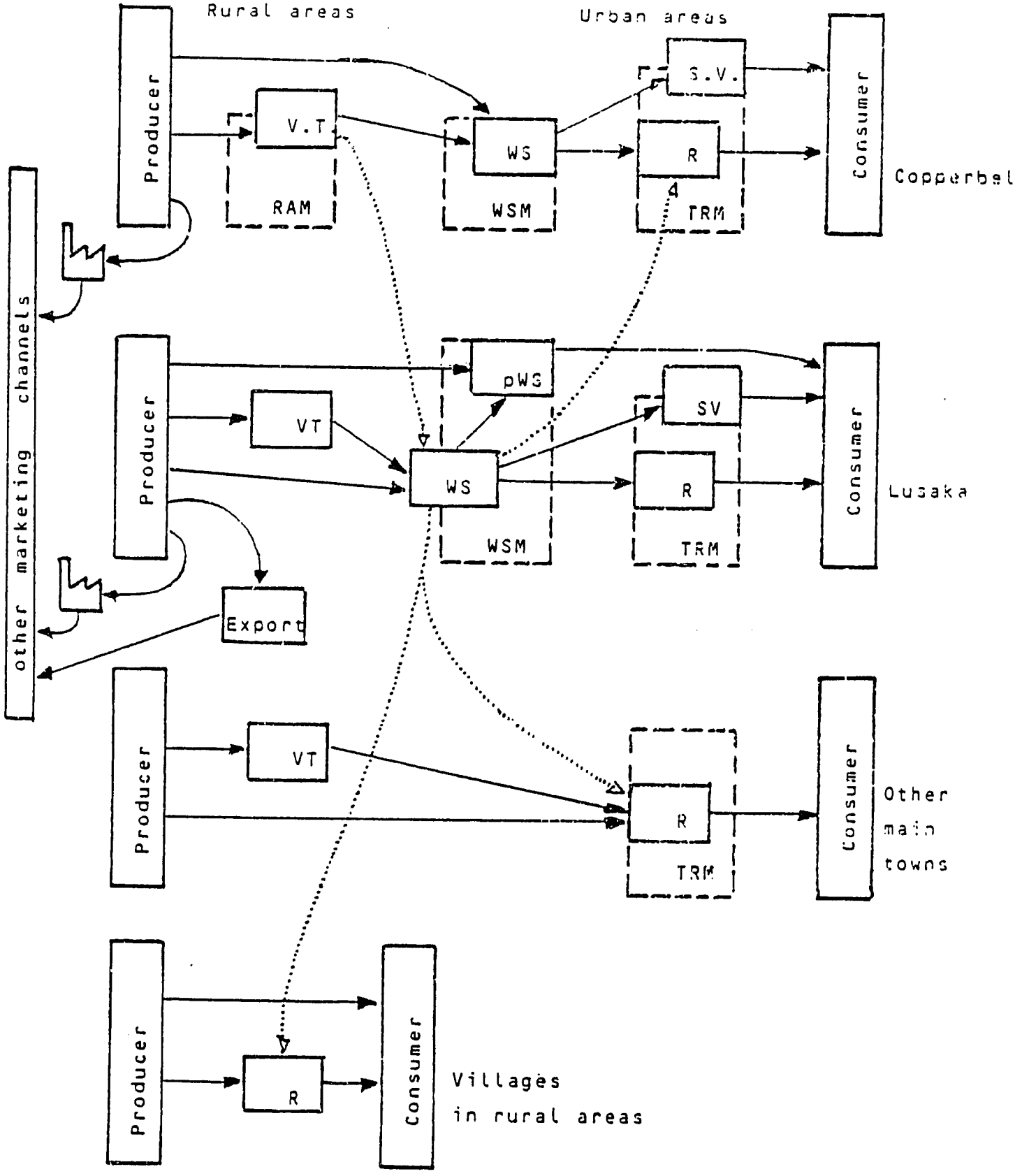

Legend : VT ; Village trader; WS ; Wholeseller and commission agent;
pWS : Petty wholesaler; R : Retailer; SV : street vendor;
RAM : rural assembly market; WSM : Wholesale market;
TRM : township retail market. ....→ Less frequent roads

214

III. THE RECOMMENDATIONS

In this chapter, the recommendations concern the whole of the fruit and vegetable industry, each section considering the three "businesses" together: domestic marketing of fresh fruit and vegetables, the export trade, and fruit and vegetable processing.

The False Solutions

In many studies and debates on fresh fruit and vegetable marketing, solutions that appear simple are often proposed but never implemented, because they are not practically realizable.

A Marketing Organization

The solution is to create an organization, statal or parastatal, in charge of buying the surplus or the whole of fruit and vegetable production, of storing it partly, and selling it in wholesale or retail markets to traders or directly to the consumers. Any detailed study will show that such an organization cannot work for highly perishable produce, in a country where vegetable and fruit production and marketing are free businesses.

A trial has already been made with the establishment of Zambian Horticultural Products Limited (ZAMHORT), in 1978. ZAMHORT was responsible for rationalizing the marketing of fruit and vegetables and for establishing facilities for transport, storage, and processing. ZAMHORT set up some rural assembly markets to make it easy to gather farmers' production, and tried to buy produce and bring it to the markets and its stores in town.

The scheme failed for many reasons, including difficult internal organizational problems. The main reasons are bound to the characteristics of vegetable production, which is irregular in quantity and quality, seasonal, and highly perishable. ZAMHORT was never in a position to buy all the production, nor to pay the prices expected by the farmers; this resulted in a lot of waste on the part of the farmers. The farmers marketed with traders in competition with ZAMHORT. In 1981, the responsibility of vegetable marketing for smallholders in rural areas was withdrawn, and ZAMHORT now deals with fruit and vegetables only for export trade, and for running a small processing line.

It is quite likely that the experiments and failure of ZAMHORT, in particular with the unsuccessful rural assembly markets, might have pushed the

farmers of the vegetable production areas for Lusaka, Mumbwa, and Chikanda to market their production in Lusaka. ZAMHORT's failure may also be the reason farmers are reluctant to use rural assembly markets or to sell to traders in their production areas. However, some assembly markets, called village markets, are working efficiently in the Copperbelt.

Price Fixation

Chapter II explained the reasons for the impossibility, in a free market, of fixing prices for highly perishable produce. The only condition under which application of fixed prices for vegetables works is when the marketing is conducted entirely by a special organization, and that is not workable.

Use of Surplus for Processing

As explained in Chapter II, there is no economic justification in the investments for processing facilities provided for using the surplus vegetable or fruit production, surpluses which are irregular and unforeseeable.

The Recommendations in Consumption

Increased consumption of fresh and dried vegetables and fruits should be promoted. Increased consumption of vegetables and fruit will improve the population's health through better nutrition. These actions have to be organized by and with the Ministry of Health and Social Affairs, the National Food and Nutrition Commission, UNICEF, and other such organizations. An improvement of the fruit and vegetable marketing process may facilitate these actions, by providing produce more regularly and possibly cheaper.

Higher consumption of dried vegetables would help. Fruit and vegetable production is seasonal. Even though some vegetables are available year round, some are missing or in short quantity in the dry and rainy seasons, mostly in rural areas. During full production periods, surpluses of vegetables are frequently lost, not being absorbed by the market.

Rural families already dry some vegetables for their own consumption: okra, various leaves, tomatoes. Some dried vegetables are also available in the fresh vegetable market: okra (dried by the traders in the market), leaves, and mushrooms. Encouraging the preparation of dried vegetables will

- Increase the consumption of vegetables out of the production periods
- Decrease the quantity of vegetables in the market in the full production periods, the surplus going directly to sun drying

This operation demands supports for training rural housewives in the best and simplest techniques of vegetable and fruit sun drying and the preparation of dried products before consumption.

The Recommendations for Production

Any variation in vegetable production, in quantity and in quality, creates fluctuations in prices for the producers and for the consumers, and makes a smooth marketing process difficult. Any action aiming to regularize the production in quantity and quality, and to adapt it to the demand, which is stable and constant year round, contributes to an improvement of the marketing process.

Supply of Inputs

In many vegetable production areas, the farmers are not regularly supplied with the necessary inputs, vegetable seeds, fertilizers, and pesticides. These inputs are often packed in inconvenient amounts; too large units, for example. This situation affects mostly the small farmers, who cannot afford the price of big packages of products, seed or pesticides when they need only a small quantity. Sometimes, in some production areas, these inputs are not available at the right time.

A regular and constant supply of the necessary inputs to the vegetable farmers in the production areas should be organized with private traders and cooperative societies. Imports of vegetable seeds should be organized as a complement of local production.

Decentralized workshops for the manufacturing of packets of the necessary inputs, adapted to the needs and the demand of the vegetable producers, should be studied and organized with private firms, cooperative societies, and state organizations like ZAMSEED.

Extension of the Production Periods

Fruit and vegetables abound in certain periods, with even surpluses over the consumer demand, and there are shortages in other times, mainly in the dry season and in the hot and rainy season. That frequently leads to unbalanced supply to the consumer demand and big price fluctuations. Many different actions are necessary to help the small and middle-sized farmers regulate their production and market this production during longer periods of time.

Adapted Varieties

Vegetable varieties well adapted to the climate should be experimented with and put at farmers' disposal for better production during the dry season and the rainy season.

African Vegetables

Most African vegetables -- okra, amaranthus, sweet potato -- stand the climate during certain periods of the year more easily than European types, and produce during a much longer period. Experiments should be conducted to improve the varieties of the African vegetables.

The production and consumption of African vegetables should be encouraged. This recommendation might be more easily implemented in rural areas, but has to be applied also for urban population consumption.

Equipment

Most of the small vegetable producers and some middle-sized farmers are not equipped with irrigation devices that would allow them to produce vegetables for a longer time during the dry season. During the hot and rainy season, the weather is very favorable for various pests. Many farmers do not know the right techniques of disease control, and are not equipped with the necessary sprayers; in these conditions, they prefer not to grow vegetables during this season.

The ZAMS project should support the farmers' supply of the necessary equipment for irrigation and for spraying, linked with technical training.

The Quality of Production

The vegetables and fruit marketed by the producer are not always of a high enough quality at the beginning of the marketing process to stand up to the marketing channels and arrive in good condition to the consumer. The damages might happen because of farmers' inadequate knowledge of the right cultural techniques, bad harvesting conditions, and poor packing.

Technical training on the following topics for the farmers should be organized:

- Horticultural techniques
- Harvesting operations
- Packaging
- Marketing

Production Costs

Studies should be carried out on the production costs of the main fruit and vegetables.

Fruit Tree Plantations

The planting of fruit trees in orchards and around the farmers' houses should be encouraged. Citrus (mostly oranges), avocado pears, and grafted mangoes, which have extended harvest periods, are recommended.

The Recommendations for Marketing

Infrastructure and the Means

Roads

Any improvement in the roads brings improvements in the marketing processes. Improvements in the rural roads have to be linked with a new organization of the physical markets in the villages (rural assembly markets) and the larger towns (production and wholesale urban markets).

Repair and maintenance of the rural roads should be studied, with precise evaluations of the physical markets, and possibly a new marketing organization of farmers and traders.

Transport Means

Studies should be completed on the use of trucks and pick-ups for the transport of fruit and vegetables from the farms to the nearest markets. The findings are to be linked with the study of repairing and maintaining rural roads.

Packaging

Packages are necessary to transport fruit and vegetables from the farms to the consumers. They are also an important means of maintaining the quality of the produce.

Physical Markets

Several markets need improvements; in some production areas and in some townships or urban compounds, new markets should be legalized or created. Each case requires a particular study of the market itself, its environment, and the possible consequences on the marketing processes. In the following paragraphs, the proposed situations are given as examples.

Rural Assembly Market. Some rural assembly markets exist in the Copperbelt as village markets. For the Lusaka area, rural assembly markets might be worthwhile in the Mumbwa-Chikanda production area. A detailed study should be carried out of the existing village markets in the Copperbelt Region, and the possibility of similar markets in other production areas, relatively distant from the consumption zones.

Wholesale Markets. In all the large towns with several fruit and vegetable retail markets, a wholesale market is necessary; some wholesale

markets are already operating in Lusaka and some other towns, but on sites without facilities. When the producers are located near the consumers, the wholesale markets where traders sell to the retailers are also markets for producers. The design and the management of such markets must be well reasoned for them to be flexible and efficient. A study should be carried out of the adapted wholesale market, for the special Zambian fruit and vegetable marketing processes, and to design the wholesale market for Lusaka.

Retail Markets. It is recommended to standardize the situation of the fruit and vegetable retail markets, and to simplify the design, building, and running of new markets everywhere it is necessary.

Storage for Domestic Marketing

The marketing processes and the permanent vegetable production, in spite of the seasonality of some produce, make the use of cold storage questionable, except for some heavy vegetables (potato, onion), that may have cheaper long-term storage. For these commodities, even though new cultural techniques would provide longer production periods, it is necessary to develop storage possibilities for a smooth supply to the market. Studies should be carried out on rural methods of potato and onion storage and how to apply these methods.

Fruit and Vegetable Storage for Export

The export of high quality fruit and vegetables by air to developed countries needs a continuous cold chain. Facilities for cold storage are lacking in Lusaka Airport. The necessary cold storage facilities should be designed and built at Lusaka Airport, to facilitate development of fruit and vegetable exports.

Marketing Agents

Producers

Vegetable producers are scattered in the rural zones and even partly in the urban areas, making the actions of the Extension Services difficult and inefficient. A voluntary grouping of the farmers might facilitate the contact with extension workers, and a more rapid spreading of improved horticultural techniques and marketing methods.

The organization of the vegetable and fruit producers in Farmers Technical Associations, at the small area and village level, should be encouraged. These self-formed FTA are only for technical studies and debates; they do not involve farmers' funds, inputs, and outputs. From their FTA, farmers will receive marketing information and training on the following:

- Horticultural production techniques
- Harvesting
- Packaging

- Marketing, and organization of small groups of farmers with the goal of consolidating their production for common marketing

Traders

Farmers and Wholesalers. Vegetable farmers are not far from the town markets, but they spend much time transporting and marketing their produce. A new organization with rural assembly markets, where necessary, and a different type of wholesale market could change the work of farmers and of traders. The place and the duties to be performed by the farmers and by the traders in a new organization should be studied as the first step in the fruit and vegetable marketing process.

Retailers and Their Associations. Retailers, in the frame of their associations, should be helped to organize their purchases from the wholesalers better. They should also receive technical training on various items, for example

- Fruit and vegetable handling and preparation for sale
- Simple methods for reducing losses
- Small business and association management
- Accounting

Produce

Quality

Good produce for the consumer depends on good agricultural techniques, and then, in the marketing process, on methods of harvesting and packing by the farmers, with correct packages, transport, and transfer through traders to the consumers. Training in harvesting and packing should be provided for the farmers, and marketing techniques for traders.

High Quality

In the present state of fruit and vegetable marketing, it is not reasonable to implement produce standardization, which implies at least

- Sorting according to strict regulations and standards, increasing the costs
- A quality control brigade for checking any application of regulations

That is not feasible. But several farmers bring into the market produce of better than average quality, and this produce obtains a higher price. That has to be encouraged, as a first real step to improving quality. Working with

farmers and traders associations, a method should be sought to encourage production and marketing of produce of higher quality.

Packages and Packing

An improvement of the packages and their use contributes to the general improvement of the fruit and vegetable marketing process, and to the reduction of losses. The two packages most used are wooden crates for tomatoes, and bags for other crops.

The bags are of different sizes and qualities, because they are old bags for fertilizer, mealie meal, and grains. They are very cheap and it is not reasonable to try to change them; but with the Farmers and Traders Associations, it could be possible to fix rules for their use, such as a fixed quantity in a bag for a certain vegetable or a maximum weight of 25 kg for heavy vegetables or fruits.

A new type of wooden crate for fragile fruit and vegetables should be developed, and funds and the necessary equipment should be provided for small workshops. Tomatoes are packed in wooden crates by farmers. The sizes of the crates are fine, but the shape and the manufacturing must be changed. The vertical pieces must remain strong enough, but all other boards must be thinner and wider with very small space between them, to avoid injuring the tomatoes. The external dimensions have to be standardized to make it easier to pile them during the marketing process. The average size of the present crates may be maintained, or it might be better to decide on a new size, which could be one of the OECD (6) standardized packages. The best size is the box with basic dimensions of 50 x 30 x 26 centimeters high. This box may be easily manufactured by carpenters supplied with adequate boards by small saw mills (using bush trees).

The quantity of the crates seems insufficient. Retailers have to change the packing in the wholesale market, before going back to their markets. It could be useful to have more boxes, owned by farmers and traders. Some way to provide funds to farmers and traders should be found, in order to increase the number of the wooden crates utilized in the market.

The Recommendations for Prices

The levels of comparative prices and traders' gross margins indicate the quality of the marketing processes. Any information and record on the prices is very useful.

The collection of fruit and vegetable prices should be organized at two levels, the farm-gate prices or the first sale by farmers to any trader (mostly wholesalers), and the retailer-consumer prices. Any information on the traders' costs, charges, and margins should be recorded to be used with other figures to measure improvements in the marketing processes.

External Interventions

It is recommended to study, with the Town Councils and other ruling authorities, how to standardize the situation of all the markets in the towns and to facilitate the settlement of new markets adapted to the traders and to the consumers.

A Coordination Bureau for Fruit and Vegetable Marketing

An improvement in the fruit and vegetable marketing process requires many different actions which may be realized by several existing services and institutions. Coordination of these actions is necessary to improve participants' efficiency.

A Fruit and Vegetable Marketing Coordination Bureau (FVMCB) should be created, with the following main tasks:

- To collect and utilize information about fruit and vegetable consumption, production, and marketing
- To coordinate any action in these fields with interested services and organizations
- To orient Agriculture Extension Services and other training institutions for farmers and traders

The responsibilities of the FVMCB will include at least the following:

- Consumption and nutrition: orient campaigns according to production and marketing seasonal availabilities.
- Production: organize with the services concerned and with public and private dealers, a regular supply of agricultural equipment and inputs and technical training; encourage farmers' actions in their Technical Associations; assess the responses to training.
- Marketing: organize training of concerned farmers and traders for harvesting and packing the produce; conduct studies on storage, packages, and market organizations; check and collect prices; and carry out any other studies and assess results of the fruit and vegetable marketing process as a whole.

IV. CONCLUSIONS AND SUMMARY OF RECOMMENDATIONS

Fruit and vegetable marketing is difficult to investigate and to understand. Improvements and changes are necessary, but must be implemented carefully, to avoid disturbing the marketing process more than necessary. The marketing process in use may not work correctly, but at least it works.

The last recommended action for the ZAMS Project is to implement a Coordination Bureau. Its main task is to coordinate studies and actions by several services or organizations within the same project for a smooth improvement of fruit and vegetable marketing in Zambia as a whole.

Consumption

1. Increased consumption of fruit and vegetables, fresh and dried, should be encouraged.

Production

2. A regular and constant supply of the necessary inputs to vegetable farmers in the production areas should be organized, in cooperation with private traders and cooperative societies.

3. Decentralized workshops should be evaluated and organized with private firms and cooperative societies and state organizations like ZAMSEED, to make packets of the necessary inputs, adapted to the needs and the demand of the vegetable producers.

4. Varieties of vegetables that are well adapted to the climate should be experimented with and put at farmers' disposal, for better production during the dry season and the rainy season.

5. The production and the consumption of African vegetables should be encouraged. Experiments should be made to improve the varieties of the African vegetables.

6. Farmers should be supported with supplies of the equipment necessary for irrigation and for spraying, linked with technical training.

7. Technical training for the farmers should be organized, in the following techniques: horticulture, harvesting, packaging, and marketing.

8. Studies should be carried out of the production costs of the main fruits and vegetables.

9. The planting of fruit trees should be encouraged.

Marketing

10. Repair and maintenance of the rural roads should be studied, with precise studies of the physical markets, possible new organizations, and the marketing processes, with farmers and traders.

11. The studies on the use of trucks, pick-ups, and oxcarts for the transport of fruit and vegetables from the farm to the nearest market should be completed.

12. A detailed study should be carried out on the existing village markets in the Copperbelt region, and the possibility of similar markets in other production areas, relatively distant from the consumption zones.

13. A study should be carried out for an appropriate wholesale market, for the special Zambian fruit and vegetable marketing processes, and to design the wholesale market for Lusaka.

14. The situation of the fruit and vegetable retail markets should be standardized, and the design, building, and running of new markets made simpler everywhere it is necessary.

15. A study should be carried out of the rural methods of potato and onion storage, and of how, eventually, to spread these methods out.

16. The necessary cold storage facilities at the Lusaka Airport should be designed and built, in order to facilitate development of fruit and vegetable exports.

17. The organization of vegetable and fruit producers in Farmers Technical Associations, at the small area and village level, should be encouraged.

18. The duties to be performed by the farmers and by the traders in a new organization as the first step in the fruit and vegetable marketing process should be determined.

19. A method to encourage production and marketing of produce of higher quality should be researched with farmers and traders associations.

20. A new type of wooden crate for fragile fruit and vegetables should be developed, and funds and necessary equipment provided for small workshops. A way should be found to provide funds to farmers and traders, in order to increase the number of wooden crates used in the market.

21. The collection of fruit and vegetable prices should be organized at two levels, the first sale by the farmer and the retailer-consumer price. Information on traders' gross margins should be recorded, to be used with other figures to measure improvements in the marketing processes.

22. Working with the town councils and other ruling authorities, a way should be found to regularize the situation of all the markets in the towns and to facilitate the development of new markets adapted to the traders and to the consumers.

23. The Fruit and Vegetable Marketing Coordination Bureau should be created.

VOLUME II. MARKET PROSPECTS FOR CASSAVA, MILLET, AND SORGHUM IN ZAMBIA

227

TABLE OF CONTENTS

Section	Page
Introduction	1
Minor Field Crops	1
Subsistence Crops	2
Traditional Sector Crops	2
Declining Trend in Production	3
Diminishing Consumption	4
Expensive "Inferior Goods"	5
Success in Maize and CMS	5
Subsidies on Maize Production	6
Subsidies on Maize Marketing	6
Subsidies on Maize Consumption	7
Remote Region Refuges	8
Summary	9

Introduction

ZAMS, the Zambia Agricultural Marketing Support project, identifies cassava, millet, and sorghum (referred to as CMS) as three minor field crops with favorable prospects in the Zambian agricultural sector, which the project could help in promoting. One of the principal reasons for having selected these crops for special consideration was that, so far, the state marketing agencies that pervade the rest of the agricultural sector have shied away from these crops. Thus, it was thought that the lack of government involvement in these crops could open favorable prospects for ZAMS to encourage their production and consumption.

Minor Field Crops

CMS are truly minor field crops from the perspective of the national agricultural economy. Although in some regions each of these crops can be of some importance in both production and the diet, their overall value is dwarfed by maize.

Preliminary crop forecast figures for the 1987/88 season anticipate a total area planted in maize of 780,000 hectares in the whole of Zambia. In contrast, the anticipated area for sorghum is only 42,000 hectares. For millet the area is even smaller, 36,000 hectares; and for cassava a bit larger, 56,000 hectares. The three CMS crops together only add up to 133,000 hectares, or barely one-sixth of the area planted in maize.

In terms of production, the relation between CMS crops and maize is even more striking. Total national production for maize for the 1987/88 crop is anticipated at 15.5 million bags of 90 kg each. The corresponding production estimates for cassava, sorghum, and millet are, respectively, 0.62, 0.26, and 0.29 million bags. Measured in bags, the combined output of the three CMS crops reaches only 3 percent of the maize output.

The reason for the reduced relative importance in terms of production is that maize has on average much higher yields per hectare than sorghum and millet, and even cassava. The national average yield for maize, according to the Ministry of Agriculture's forecasts, is close to 20 bags per hectare. Forecasts for sorghum average 6 bags; for millet, 8 bags; and for cassava, 11.3 bags per hectare.

229

Subsistence Crops

For the purposes of the ZAMS project, it is interesting to ask how important cassava, sorghum, and millet are in the rest of the economy (i.e., what proportion of output is sold by producers for use either in consumption, processing, or exports).

It comes as no surprise that these crops are basically subsistence crops that are consumed mainly within the producing household, and when sold, are traded mainly within the village or zone of production. Very little is traded outside the immediate region of production. By contrast, maize has become the cash crop for both the commercial and the traditional sectors.

The Ministry of Agriculture expects the sales of maize for 1987/88 to reach 11,200,000 bags, or 73 percent of the overall production. The weather has been fairly favorable for this crop year, and farmers are expected to sell a higher proportion of their output than last year, when yields were low because of severely low rainfall. Sales of sorghum are also anticipated to increase substantially to 24,000 bags, representing 9 percent of total sorghum production, but only about one-fifth of one percent of maize sales in the market. For every kilogram of maize in the market there are 2 grams of sorghum.

The relative marketing of millet and cassava is even weaker than that for sorghum. Only 5,140 bags are expected to be sold by millet producers in the 1987/88 crop year, or one-fifth of one percent of the total production (18 grams of every kilogram produced). For cassava, 11,678 bags are expected to be sold out of the 626,000 produced (about 19 grams sold per kilogram produced).

Traditional Sector Crops

The high level of household retention of the output of the CMS crops for internal consumption indicates that these crops are mainly grown by traditional farmers, those who are less incorporated into the market economy and use low-input production technology. But even traditional farmers have a need to generate money income to purchase many other necessities from outside the village, such as sugar, matches, candles, and tea. Therefore, one must wonder to what extent cassava, sorghum, and millet are sold by traditional farmers to generate such cash income.

Unpublished data from another agency of the Zambian government throws some light on this question. The value of farm products in the traditional sector was averaged for the period 1982-85 (three crop years), and disaggregated by crop. The government found that maize generates the most cash income even for traditional farmers. Maize represents 60 percent of the total value of traditional agricultural production, valued at the average prices farmers received in the market. The second most valuable crop, in terms of production, was cassava, which generated 11 percent of the total value. Millet and groundnuts contributed 7 percent each. Sorghum only contributed 2.6

percent of total value, slightly less than beans (3 percent), and cotton (4 percent).

These figures refer only to the traditional sector: they exclude the commercial sector, where the importance of cassava, sorghum, and millet is even less. Even in the traditional sector, maize is the most marketable crop: 55 percent of maize was sold, compared with only 9 percent of cassava, 8 percent of millet, and 4 percent of sorghum (96 percent of sorghum is retained on the farm).

Maize constitutes the principal cash crop, even among the so-called traditional farmers. Cassava and millet also make significant, though minor contributions. Sorghum, however, even among traditional farmers, is practically all consumed internally; only a minuscule portion is sold.

Declining Trend in Production

The current forecast for sorghum area planted and production is substantially lower than last year's. Last year's was also lower than the previous year. In the 1985-86 season, the Ministry of Agriculture estimated that 56,000 hectares were planted in sorghum, followed by 47,000 hectares in the 1986-87 crop year; and forecasted 42,000 hectares for the 1987-88 season. In terms of production, the coming harvest is estimated at 255,000 bags, compared with 291,000 the previous harvest, and 500,000 in the 1985-86 crop year. The 1985-86 year had the highest area planted in sorghum in several years, but it is still far lower than the 89,000 hectares planted in 1979/80. The definite trend in the last few years has been one of fewer hectares planted to sorghum and lower yields per hectare.

Data on millet and cassava are less reliable and less available than that for sorghum. This year is the first one for which there is an estimate of area, production, and sales for cassava, so little can be said about possible trends. We surmise however, that a downward trend has persisted for several years, based partly on evidence of reduced consumption, but also on the decimation of cassava production from the spread of the mealy bug. It is not known whether efforts at biological control of the mealy bug have been sufficiently successful to anticipate a renewed growth in cassava production. At any rate, the recovery will probably be slow, since cassava is reproduced vegetatively.

Trends in millet production are rather difficult to detect on the basis of recent figures from the Ministry of Agriculture. Area planted in 1986-87 seems to have more than doubled to 44,000 hectares from about 20,000 on average for the previous three years. Production also increased almost three-fold according to the same figures, but sales in fact declined by 50 percent in 1986-87 with respect to 1985-86. The forecast for 1987-88 is equally perplexing; although area planted is lower by 18 percent than in 1986-87, and while production is expected to drop by 14 percent, total sales are expected to increase by 135 percent to 5,000 bags.

It is risky, on the basis of official figures available, to make pronouncements about possible past trends in area, production, and sales of cassava, millet, and sorghum. It is even riskier to predict how these variables are likely to evolve in the future; however, we are left with the definite impression that production of these three crops has suffered a persistent decline in the past decade. Drought in the 1986-87 crop year might have shocked the authorities and traditional farmers into increasing plantings of sorghum and millet instead of maize, but empirical evidence of this effect remains to be seen.

Diminishing Consumption

The relatively low importance of cassava, millet, and sorghum in farm production reflects a corresponding decline of these products in the regional diets of the population.

It is not possible to provide empirical evidence of the changing pattern of consumption in Zambia during the last few years. The last National Food Consumption Survey was carried out in 1969-72 with the participation of the Food and Agricultural Organization. The rural household survey conducted by the Ministry of Agriculture in the early 1980s has not yet been processed, but some results are expected in the coming years.

However, there is ample anecdotal evidence that food consumption patterns have changed drastically over the last decade or two. Older adults can recall that their diets when growing up were far more dependent on traditional staples like cassava, sorghum, and millet, depending on their region of origin. The dominance of maize is a relatively recent phenomenon of the last two decades. Maize substitution has now become almost complete, pervading diets even in the Northern and Southern provinces, which were formerly accustomed solely to cassava or sorghum. Perhaps most poignant is the complete substitution of maize for sorghum in the manufacture of the traditional and popular opaque beer, Chibuku, in urban areas. Until recently, only red sorghum was, and still is in many rural areas, considered suitable to make Chibuku beer.

In urban areas, the disappearance of cassava and sorghum from the diet is a reality. Despite numerous inquiries, the authors were not able to obtain cassava flour or sorghum, or any information on where to find them, in the central Lusaka area. Other colleagues report having found it in the supermarket or the public market sometime in the recent past. Those who report finding cassava flour remember paying extraordinarily high prices, about 10 Kwacha per kilo.

There seems to be some unanimity about the merits of blending a small portion of cassava flour with the maize meal to make nshima. The cassava flour reportedly improves both the flavor and the consistency of the traditional dish. The main reasons for not using cassava flour more often are the lack of availability and its high price compared with mealie meal.

Consumption of cassava in the Copperbelt area is equally rare, even though that area used to produce cassava in large quantities. Now, the most common form of cassava consumption is as a green vegetable; the leaves are used in preparing relish for the nshima. Cassava consumption still represents a major share of the regional diets only Luapula and the Northwest provinces. In rural areas of the Southern Province, sorghum is still the preferred staple grain.

Expensive "Inferior Goods"

The usual explanation given for the decline in consumption of cassava, millet, and sorghum in the urban Zambian diet is that these staples are inferior foods; therefore, their consumption diminishes as consumer income rises. European and American tastebuds undoubtedly have a low preference for cassava and coarser grains, but they don't eat maize either. It is likely that as their incomes increase, the food preferences of Zambians might follow a similar ranking.

However, the mere preference of maize over sorghum or cassava is not sufficient to assume the latter are inferior foods. Nutritionally, they are roughly equivalent in terms of caloric content. More paradoxically, income per capita in Zambia cannot be said to have increased much in the past two decades, while the shift to maize has been taking place.

Finally, consumption per capita of an inferior food declines even though the cost of the food is low relative to the alternative substitutes. The situation in Zambia is the reverse. The costs to consumers reported for sorghum, cassava, and millet are far higher than for maize. Finger millet, for example, can be purchased at ZCBC in Lusaka at 6 K per kilo, while the cost of mealie meal is only 80 Ngwe, that is, finger millet costs seven times as much as corn already ground. Similarly, cassava is reportedly available at more than 10 K per kilo, or 12 times the cost of mealie meal.

The high prices of cassava, sorghum, and millet in the urban markets, together with the decline in urban per capita income levels in the last decade, cast doubts on the validity of labeling them as inferior foods. More likely, their reduced consumption in favor of maize can be explained better as the logical result of the lower prices for maize during the period. In this case, their drop in consumption is consistent with the behavior of consumers toward any normal food.

Success in Maize and CMS

In contrast to the rather depressing performance observed in the CMS crops, maize production has made steady inroads in the past few years. In the five years from 1982/83 to 1987/88, area planted in maize has increased by 56 percent, production has grown proportionately, and market sales have nearly doubled from 6.3 million to 11.2 million bags. Such spectacular gains in maize production are well known and have been analyzed. The Government of Zambia, and the Ministry of Agriculture and Water Development in particular,

can claim much credit for a successful campaign to increase maize production to become self-sufficient in that cereal.

The question that arises is to what extent has the increase in maize production caused a concurrent decline in other crops.

The competitiveness of cassava, millet, and sorghum relative to maize has been affected by many government policies and actions to achieve maize self-sufficiency. These policies have affected the relative position of CMS crops at the producer, consumer, and trader levels.

Subsidies on Maize Production

Producers of maize benefit from several incentives that are not offered to producers of cassava, sorghum, and millet. Credit, for example, is generously provided to maize producers, with the harvest accepted as collateral. This is facilitated by the Cooperative Union, which, as the sole purchaser of maize, can guarantee the repayment of the loan. Moreover, farmers' credit is highly subsidized, since the rate charged is only 18 percent, while the inflation rate is nearly three times as much. This generosity is not available to producers of any of the CMS crops.

The provision of credit is accompanied by access to many purchased farm inputs, from fertilizers to ox-drawn equipment. Fertilizer is also highly subsidized by the Zambian government, which means that farmers producing maize benefit from the subsidy, while those producing cassava, sorghum, or millet do not, since none of these crops receive any inorganic fertilizer.

Furthermore, fuel and machinery are also available at prices well below real cost, because they are priced at the official exchange rate of the Kwacha. This rate is overvalued by a factor or 200 to 300 percent. Hence, maize producers using machinery and fuel are actually paying one-half or one-third of their real costs. In contrast, sorghum, cassava, and millet producers are not able to take advantage of these hidden subsidies, because they do not use any of this mechanized equipment.

Crop budgets for large-scale maize farmers estimate that up to 70 percent of their costs are imported inputs. This means that for two-thirds of their inputs they are paying one-third of the real costs. If the Kwacha were not overvalued, production costs for these farmers would jump by 133 percent over the current levels, not including the actual subsidies on fertilizer, seeds, credit, and so forth. Producers of cassava, sorghum, and millet who use imported inputs will also see their costs increase, but since their use of these inputs is minimal, the impact will be much less than for maize producers.

Subsidies on Maize Marketing

Another major advantage that maize producers have over producers of CMS crops is a guaranteed market at a guaranteed price, right next to their farms. Farmers harvesting maize are provided grain sacks by the cooperatives, and all they have to do is deliver the full sacks of shelled grain to the nearest collection depot, normally a short distance from the farm. The

provincial Cooperative Union takes care of storing and transporting the maize from these collection points to the central provincial depots. The farmer receives 80 Kwacha per bag of 90 kilos, with no discount for the subsequent transport. In the Eastern Province, the Cooperative Union estimates that it spends 35 Kwacha per bag to get it from the farmer to the central depots. This cost is reimbursed by the central Zambian government. Farmers producing sorghum, cassava, and millet are not offered these facilities, and until now, the cooperatives have not handled these commodities.

Until a few weeks ago, NAMBoard received the maize bags from the Cooperative Unions and in turn delivered them to millers, brewers, and other processors of maize. In the process, NAMBoard took care of transporting the maize bags all over the country, from surplus areas to deficit areas. NAMBoard also paid for the storage costs, losses, and financial costs of maintaining the entire national maize stock. All expenses incurred by NAMBoard are absorbed by the national government, allowing it to sell a bag of maize to millers at the same price that the farmer received for the grain, namely 80 Kwacha per 90 kilos.

Needless to say, neither the transport nor the storage of cassava, sorghum, or millet receives similar treatment from government agencies. Traders interested in buying and selling sorghum, for example, would have to go to rural areas to procure it themselves, and pay for all the transport and storage involved. As a result, producers would necessarily receive a lower price, and users would receive a higher price. In maize, the government takes care of all that at no charge.

Subsidies on Maize Consumption

Government generosity towards maize does not stop at the miller's door. All mills are now nationalized, but even when they were privately operated, the government paid millers a substantial subsidy for every bag of maize processed, depending on whether they produced roller meal or breakfast meal. This is still the case.

Much of the distribution of maize to urban consumers is done through the network of state-run supermarkets and shops, at prices fixed by the state. Since it is likely that these state shops operate at a loss, the government contributes a hidden subsidy to the consumption of maize.

Neither millers nor the state-run stores distribute any cassava or sorghum to consumers; therefore, consumers of these commodities do not benefit from the generosity that the government proffers to maize consumers. Some small amounts of finger millet have been sold at ZCBC and other state shops; however, most of the millet reportedly will be used for home beer making, or to blend with mealie meal to improve its flavor.

The conclusion is that maize production, trade, and consumption have been so favored by government pricing and subsidy policies that any crop that can be substituted for by maize cannot remain competitive for long. The observed disappearance of cassava, sorghum, and millet consumption in urban areas, and to a lesser extent in rural areas, could be directly attributed to

these policies. As long as these pricing and subsidy policies persist, the outlook for cassava, millet, and sorghum will remain bleak.

Remote Region Refuges

Consumption of CMS crops has remained an important part of the local diet only in those areas of Zambia so remote that they are relatively unaffected by the maize policies of the central government. More precisely, the government takes primary responsibility for providing cheap mealie meal to urban consumers, but not to rural dwellers. Zambians who reside far from major cities or towns do not have access to the cheap maize available to their urban cousins; therefore, they are forced to provide their own staples.

Whenever a farmer is able to acquire subsidized mealie meal on a regular basis, it will quickly become the basic staple for the family diet; therefore, it is not surprising that farmers along the main tarmac roads have adopted maize as the basic staple. These farmers find it advantageous to sell their maize production to the government and then buy back their own family needs at subsidized prices.

Even farmers in faraway areas without access to subsidized mealie meal might find it advantageous to switch their production to maize, and to take advantage of the production and marketing subsidies available to maize producers. The higher yields obtained for maize under normal rainfall conditions will induce these families to switch to maize consumption. In those cases, they find it necessary to mill the maize themselves or in hammermills owned by someone else in their communities. These families often produce and sell hybrid maize to the cooperative, but use local varieties for themselves, because they prefer its taste, and it is easier to process at home.

In areas with climate unfavorable for maize, such as the low-rainfall areas of the Southern, Western, and North-Western Provinces, sorghum and millet become viable competitors to maize because of their high drought resistance. Most of the sorghum acreage is concentrated in those provinces. Of the 42,000 hectares of sorghum in the 1987-88 season, 11,000 are in the Southern province, 7,000 in the Western province, and 6,000 in Northwest. The Central province has an appreciable production of sorghum, almost 8,000 hectares.

Only the Southern Province is expected to market a substantial amount of sorghum to the outside. The entire marketed output expected for 1987/88 only reaches 24,000 bags of 90 kg each, of which 19,000 are expected to originate in the Southern Province. In the other regions, sorghum production will remain mainly within the producing household, or be traded within the immediate community.

One of the principal uses of sorghum in the production areas is the manufacture of local beer. Sorghum is also used in nshima, either by itself or mixed with mealie meal, but for making local beer, red sorghum is the preferred grain, because it tastes better than maize beer. Finger millet is also a substitute for beer brewing. Beer brewing is permitted only in rural areas

by the authorities. In any urban concentration, the government has a state monopoly on the manufacture of beer, either the bottled kind, or more commonly, the opaque beer known as Chibuku beer.

Millet is used in a manner similiar to that of sorghum: white bulrush millet is used mainly for nshima, while the reddish finger millet is used mainly for beer brewing, but the two uses are common for both types of millet. Distribution of millet production overlaps with sorghum to some extent, but the largest acreage of millet is found in the Northern Province with 10,000 hectares, followed by Luapula and Western Provinces with 8,000 hectares each. The Southern and Eastern Provinces are also important millet producers with 5,000 and 4,000 hectares. Eighty percent of all market sales of millet are contributed by Luapula and Western Provinces (4,000 out of a total market of 5,000 bags), a truly small amount equivalent to nearly 500 tons. As in the case of sorghum, most millet produced remains within the household, or is traded within the immediate vicinity.

Cassava production and trade are even more concentrated regionally than sorghum and millet. Production is concentrated in Luapula, perhaps the most remote of all provinces with regard to the urban markets of Lusaka and the Copperbelt. Of the national area planted in cassava (56,000 hectares), Luapula contains 19,000. Following in importance of area are the Northwestern Province (15,000 hectares), the Western Province (13,000 hectares), and the Northern Province (9,000 hectares). Nevertheless, cassava sales originate almost exclusively from the Western Province. Production in other regions is mainly for home or local consumption. Luapula does provide a small significant volume of cassava chip exports to Zaire. This trade is probably illegal, however, so there are no official data to assess its importance.

In conclusion, production of cassava, sorghum, and millet is heavily concentrated in the provinces most distant from the centers of commercial activity along the line of rail between Lusaka and the Copperbelt. These provinces are Luapula, Northern, Northwestern, Western, and Southern. High transport costs, as well as climate unfavorable for maize production, have helped these crops survive the competition with maize. Nevertheless, maize constitutes the principal cash crop even in those provinces where CMS are important. With the exception of cassava in Luapula, the area planted in any of these CMS crops is overshadowed by the area planted in maize.

Summary

The prospects for promoting cassava, millet, and sorghum consumption and production through improvements in the marketing system are discouraging at present. Although these crops have been spared direct government intervention, they suffer the indirect consequences of official aide to maize production, marketing, and consumption. There are several reasons why it does not seem advisable for A.I.D. to concentrate much effort on promoting the marketing of these three field crops identified in the project identification paper. Some of these reasons are

- These are minor crops within the context of the national economy.
- These are minor crops within the economy of traditional rural households.
- These are minor crops within the market economy.
- These crops are declining in importance in production as well as consumption in both urban and rural areas.
- CMS crops are declining over time in production and marketing.
- Given the current price structure, these crops do not seem competitive with the other crops. In particular, CMS crops seem to be fighting a losing battle against the onslaught of maize.
- Other crops seem more promising than these three in terms of potential markets, both domestically and for export to other countries.
- Production of CMS crops is limited to remote areas, far from the urban centers that constitute the principal prospective markets, and with high transport costs from other markets.
- These are crops grown by traditional farmers; they have been shunned by commercial farmers for both cultural and economic reasons.
- There is very little that A.I.D., or for that matter the government, can do to affect the profitability of these crops significantly, since production is so dispersed in remote areas.
- There is a limited repertoire of intervention that can be used to promote these crops; varieties are limited, uses are limited, and each has a particular set of inconveniences that must be addressed before it can become a common product.
- These are crops that the Cooperative Unions do not want; however, the Cooperative Unions handle the bulk of the marketing of farm products, removing the incentive for potential traders to become involved in the three CMS crops.

238

		MAIZE						SUNFLOWER					
		Area (ha)	% change	Prod. (bags)	% change	Sales (bags)	% change	Area (ha)	% change	Prod. (bags)	% change	Sales (bags)	% change
ZAMBIA	83-84	506500	n.a.	9686200	n.a.	6267637	n.a.	57700	n.a.	868167	n.a.	808535	n.a.
	84-85	581846	14.88	12470570	28.75	7069637	12.80	62728	8.83	948474	[illegible].36	599910	-36.93
	85-86	588490	1.14	13673265	9.64	10607414	50.04	57200	-9.74	687523	-27.93	537199	5.35
	86-87	609529	3.58	11816096	-13.58	7296244	-31.22	31523	-44.76	340015	-44.40	139762	-74.06
	87-88	779619	27.91	15383978	30.20	11187301	53.33	37853	26.12	245871	-27.69	245356	76.86
CENTRAL	83-84	101000	n.a.	2759000	n.a.	2117778	n.a.	12000	n.a.	192000	n.a.	192516	n.a.
	84-85	118675	17.50	3171952	14.97	2232632	5.42	12340	2.83	200400	4.38	165267	-9.45
	85-86	114900	-3.11	3259540	2.76	3254540	45.77	18530	50.16	179807	-10.26	179807	8.80
	86-87	106000	-7.81	3131360	-3.93	2114445	-35.03	14641	-20.99	130428	-27.46	41029	-77.13
	87-88	115422	8.89	3287368	4.98	2595550	22.73	14947	2.09	50638	-61.18	46185	12.57
COPPERBELT	83-84	10400	n.a.	193000	n.a.	133424	n.a.	690	n.a.	6200	n.a.	3378	n.a.
	84-85	15475	48.99	321493	75.67	241721	81.17	555	-19.57	7898	27.26	1813	-46.33
	85-86	16618	7.20	403848	25.62	739829	31.27	722	-63.68	2000	-74.65	1769	-2.43
	86-87	19817	19.31	536145	32.76	517543	32.76	199	-18.26	1916	-4.20	776	-56.13
	87-88	20852	1.19	878094	63.78	753199	45.53	428	127.66	1539	-17.87	1589	104.77
EASTERN	83-84	214000	n.a.	3319000	n.a.	1849239	n.a.	22700	n.a.	288600	n.a.	259549	n.a.
	84-85	206000	-3.74	3666554	10.53	1760627	-3.71	17400	-15.94	247050	-14.39	150619	-41.97
	85-86	241430	17.20	3563910	-2.85	2372471	33.27	16980	-2.39	147500	-40.39	69913	-53.58
	86-87	192544	-20.25	3551498	-0.35	2010778	-15.26	2726	-90.41	39556	-73.18	49433	-29.29
	87-88	280826	45.85	3329769	-6.27	2264327	12.61	5847	76.86	46747	18.18	45346	-8.27
LUAPULA	83-84	4500	n.a.	95000	n.a.	71891	n.a.	270	n.a.	3300	n.a.	2439	n.a.
	84-85	5358	19.07	109266	15.02	58726	-17.40	190	-34.48	1500	-54.55	1110	-54.49
	85-86	5740	7.13	127020	16.26	103872	76.89	118	-42.11	1002	-33.33	500	-54.95
	86-87	10995	91.55	199025	56.68	151610	45.96	87	-20.91	1974	97.40	356	-29.80
	87-88	9054	-17.65	205839	3.42	158347	4.44	122	40.23	1692	-14.29	1665	367.70
LUSAKA	83-84	25000	n.a.	460000	n.a.	113155	n.a.	3800	n.a.	68400	n.a.	61537	n.a.
	84-85	32335	29.34	720036	56.53	267384	136.30	2750	-1.32	67230	-0.83	32899	-46.54
	85-86	34120	5.52	663990	-7.78	557329	108.44	3320	-0.80	39954	-41.11	39944	21.41
	86-87	44334	29.94	393750	-40.78	374061	-32.89	2252	-39.44	23814	-40.38	11236	-71.87
	87-88	42835	-3.38	903483	129.46	559780	49.63	337	-62.95	4556	-80.87	4556	-59.45
NORTHERN	83-84	42400	n.a.	1000000	n.a.	750552	n.a.	850	n.a.	5000	n.a.	2939	n.a.
	84-85	46757	10.28	1073771	7.39	739451	-1.61	477	-43.82	8150	63.00	1755	-40.29
	85-86	45820	-2.00	1013710	-5.59	673911	-8.74	170	-64.36	1520	-81.69	1433	-18.35
	86-87	50386	9.97	1126000	11.16	920719	37.81	160	-5.88	2532	66.80	337	-76.48
	87-88	50034	-0.70	1193927	5.96	1019532	9.78	58	-63.75	455	-82.03	350	3.86
N/WESTERN	83-84	4200	n.a.	93000	n.a.	67141	n.a.	220	n.a.	3500	n.a.	3169	n.a.
	84-85	5288	25.90	111094	20.32	74644	11.17	105	-53.27	1683	-51.91	1603	-46.89
	85-86	5590	5.71	113970	1.86	83287	11.58	170	61.90	1500	-10.87	1375	-10.30
	86-87	9442	68.91	168537	47.88	114602	37.60	42	-75.29	334	-77.73	821	-40.29
	87-88	14071	49.03	272356	61.60	209045	82.41	69	61.90	978	192.81	736	-10.35
SOUTHERN	83-84	92000	n.a.	1637000	n.a.	1075813	n.a.	13100	n.a.	292347	n.a.	292347	n.a.
	84-85	134043	48.94	3286235	92.05	1593980	47.23	27761	45.35	313518	7.24	154341	-47.21
	85-86	104100	-22.34	4308415	39.34	3203111	89.92	17320	-37.57	237752	-24.16	237752	54.04
	86-87	150357	44.44	2507749	-41.69	998781	-67.13	10906	-37.07	139320	-41.40	35225	-85.18
	87-88	221997	47.64	4997649	99.29	3495521	253.59	17525	60.69	139054	-0.19	138302	292.62
WESTERN	83-84	15000	n.a.	170000	n.a.	89444	n.a.	170	n.a.	820	n.a.	629	n.a.
	84-85	17895	19.30	207377	21.99	91579	2.39	100	-23.09	431	-47.44	431	-31.48
	85-86	20169	12.32	226948	9.39	163564	78.61	60	-40.00	530	22.97	529	22.74
	86-87	25654	27.63	201232	-11.38	95595	-41.56	17	-71.67	144	-72.83	149	-71.83
	87-88	25338	-1.23	316493	57.23	131799	37.88	21	23.53	162	12.50	128	-14.09

NOTE: In 1986/87 139,362x50kg bags of sunflower were purchased by official channels. RDP purchased an additional of 6509 bags for a total known purchases of 145,871x50kg bags

		SOYABEANS						GROUNDNUTS					
		Area (ha)	% change	Prod. (bags)	% change	Sales (bags)	% change	Area (ha)	% change	Prod. (bags)	% change	Sales (bags)	% change
ZAMBIA	83-84	9400	n.a.	146150	n.a.	106168	n.a.	25520	n.a	163710	n.a.	14477	n.a.
	84-85	9836	4.64	163754	12.05	117795	10.95	31711	8.10	181469	7.38	30243	108.90
	85-86	13854	40.85	176732	7.93	143917	22.18	34260	7.67	227300	25.26	78506	159.58
	86-87	16857	21.68	149583	-15.36	25580	-82.36	142016	333.69	572930	150.81	22148	-71.79
	87-88	19812	17.53	241391	61.38	229266	803.33	58302	-60.88	400510	-32.44	69752	214.94
CENTRAL	83-84	1410	n.a.	18600	n.a.	10144	n.a.	2500	n.a.	18800	n.a.	51	n.a.
	84-85	1982	40.57	26050	40.05	22145	118.31	6015	140.60	12932	-31.21	27	-47.06
	85-86	2269	14.48	29502	13.25	29502	33.22	4420	-26.52	18110	40.04	1278	4633.33
	86-87	5608	147.16	25893	-12.23	1251	-95.76	13428	203.80	40327	122.68	119	-90.69
	87-88	6026	7.45	67038	158.90	66343	5203.20	4962	-63.05	22816	-43.42	2050	1622.69
COPPERBELT	83-84	1450	n.a.	22500	n.a.	3088	n.a.	450	n.a.	3200	n.a.	15	n.a.
	84-85	2222	53.24	39821	76.98	5486	61.92	1047	132.67	6458	101.19	3	-80.00
	85-86	460	-79.30	7153	-82.04	7153	30.39	1280	22.25	8960	39.17	54	1700.00
	86-87	493	7.17	23092	222.83	20736	189.89	3945	208.20	17204	92.01	0	-100.00
	87-88	3902	691.48	70539	205.47	70531	240.14	1400	-64.51	9204	-46.50	204	100.00
EASTERN	83-84	440	n.a.	4300	n.a.	632	n.a.	14700	n.a.	88000	n.a.	14091	n.a.
	84-85	600	36.36	4389	2.07	4082	545.89	11608	-19.67	83468	-5.15	29929	112.40
	85-86	2025	237.50	20249	361.36	20249	396.06	14000	18.56	113330	35.78	72092	140.89
	86-87	3663	80.89	20271	0.11	361	-98.22	48328	245.20	176238	73.16	21945	-69.56
	87-88	2380	-35.03	17651	-12.92	16621	4504.16	23461	-41.11	221152	12.70	62024	182.62
LUAPULA	83-84	20	n.a.	220	n.a.	35	n.a.	500	n.a.	4500	n.a.	8	n.a.
	84-85	85	325.00	582	164.55	551	1474.29	542	-6.55	2935	-34.78	1	-87.50
	85-86	310	264.71	3704	536.43	3704	572.23	740	36.53	5500	87.39	5	400.00
	86-87	340	9.68	3272	-11.66	0	-100.00	12072	1531.35	70304	1178.25	0	-100.00
	87-88	488	43.53	3286	0.43	3212	100.00	3116	-74.19	16587	-76.41	292	100.00
LUSAKA	83-84	3600	n.a.	79200	n.a.	78363	n.a.	320	n.a.	1500	n.a.	10	n.a.
	84-85	2250	-37.50	45000	-43.18	44955	-42.63	338	5.63	2558	70.53	5	-50.00
	85-86	3820	69.78	53480	18.84	45125	0.38	460	36.09	5780	110.32	299	5880.00
	86-87	2187	-42.75	27113	-49.30	2821	-93.75	1944	322.61	2121	-60.58	0	-100.00
	87-88	607	-72.25	7022	-74.10	721	-74.44	620	-68.11	2190	3.25	15	100.00
NORTHERN	83-84	140	n.a.	1910	n.a.	37	n.a.	3900	n.a.	26800	n.a.	1	n.a.
	84-85	621	343.57	5137	168.95	4464	11964.86	2635	-32.66	21022	-21.56	0	-100.00
	85-86	1397	124.96	13973	172.01	13973	213.02	2900	6.26	20140	-4.20	0	n.a.
	86-87	1224	-12.38	12824	-8.22	0	-100.00	37645	1244.46	206887	927.24	5	n.a.
	87-88	2310	88.73	26666	107.94	25993	100.00	3588	-90.47	28713	-86.12	2432	49540.00
N/WESTERN	83-84	20	n.a.	230	n.a.	111	n.a.	340	n.a.	2800	n.a.	245	n.a.
	84-85	179	795.00	1597	594.35	1427	1185.59	312	-8.24	2104	-24.86	145	-40.82
	85-86	610	240.78	7318	358.23	7318	412.82	310	-0.64	3870	83.94	145	0.00
	86-87	486	-20.33	7201	-1.60	399	-94.55	1982	539.35	15162	291.78	43	-70.34
	87-88	1664	242.39	19551	171.50	16554	4048.87	305	-84.61	2080	-86.28	427	893.02
SOUTHERN	83-84	2300	n.a.	19000	n.a.	13273	n.a.	6500	n.a.	19600	n.a.	45	n.a.
	84-85	1850	-19.57	40700	114.21	34602	160.69	8085	24.35	46950	139.54	98	117.78
	85-86	2930	58.38	41020	0.79	16560	-52.14	7090	12.43	47010	0.13	4362	4351.02
	86-87	2776	-5.26	29357	-28.43	96	-99.48	25240	177.67	30811	-34.46	35	-99.20
	87-88	2305	-16.97	28379	-1.63	28532	33076.74	15175	-39.80	92915	201.56	2121	5960.00
WESTERN	83-84	20	n.a.	170	n.a.	185	n.a.	320	n.a.	710	n.a.	11	n.a.
	84-85	47	135.00	478	151.52	83	-55.14	1133	242.12	3061	331.13	35	218.18
	85-86	33	-29.79	333	-30.33	333	301.20	1260	11.60	5000	63.35	271	674.29
	86-87	80	142.42	560	68.17	345	3.60	4432	251.75	13776	175.52	0	-100.00
	87-88	130	62.50	759	35.54	759	120.00	655	-85.22	4853	-64.77	187	100.00

NOTE: In 106/87 25,390x50kg bags of soyabeans were purchased by official channels. ROP and LINTCO purchased an additional 119,294 bags for a total known purchases of 144,674x50kg bags.

240

Table C 1987-88 PRELIMINARY FSRP CROP FORECAST WITH % CHANGE FROM PREVIOUS 3 OF 4.

		PADDY RICE						M. BEANS					
		Area (ha)	% change	Prod. (bags)	% change	Sales (bags)	% change	Area (ha)	% change	Prod. (bags)	% change	Sales (bags)	% change
ZAMBIA	83-84	8748	n.a.	115578	n.a.	67797	n.a.	[illegible]	n.a.	59998	n.a.	1178	n.a.
	84-85	10701	22.44	140411	21.16	78541	15.59	[illegible]	10.54	61602	2.67	5263	349.83
	85-86	10404	-2.78	140098	-0.23	69576	-11.14	[illegible]	175.93	113298	83.91	10877	106.67
	86-87	8671	-16.66	103988	-26.43	45596	-34.32	[illegible]	20.39	171677	51.54	12072	10.99
	87-88	10717	23.60	125712	22.07	76893	68.25	[illegible]	-48.27	71778	-46.54	6955	-42.39
CENTRAL	83-84	30	n.a.	518	n.a.	180	n.a.	623	n.a.	8202	n.a.	3	n.a.
	84-85	18	-40.00	301	-40.98	29	-83.67	[illegible]	122.06	5938	-27.59	0	n.a.
	85-86	30	66.67	410	36.21	31	6.90	5553	336.21	44438	646.23	4443	n.a.
	86-87	91	203.33	545	32.93	42	35.49	6023	8.05	48309	9.04	9442	112.51
	87-88	26	-71.43	334	-38.72	274	552.79	604	-89.95	7316	-93.29	6	-99.94
COPPERBELT	83-84	70	n.a.	1150	n.a.	49	n.a.	50	n.a.	248	n.a.	164	n.a.
	84-85	47	-32.86	424	-64.07	75	53.06	143	178.00	896	176.67	1	-99.39
	85-86	102	112.77	722	70.17	78	-43.33	222	-9.47	1742	94.78	12	1100.00
	86-87	128	23.20	922	27.67	0	-100.00	279	26.36	1959	-4.18	0	-33.33
	87-88	159	24.22	987	5.90	0	n.a.	362	23.22	2163	13.13	566	6975.00
EASTERN	83-84	1538	n.a.	13702	n.a.	4413	n.a.	1572	n.a.	7700	n.a.	18	n.a.
	84-85	1519	-0.78	19699	43.73	5123	16.09	715	-48.96	3626	-52.91	395	2094.44
	85-86	1132	-26.22	17460	-11.36	6329	23.54	920	29.39	6248	72.09	611	54.68
	86-87	646	-42.32	12221	-34.28	2720	-57.02	1909	93.52	10692	71.19	37	-93.94
	87-88	867	34.21	17897	39.32	3402	25.07	1664	7.04	11501	7.67	262	608.11
LUAPULA	83-84	598	n.a.	7278	n.a.	4731	n.a.	242	n.a.	2728	n.a.	5	n.a.
	84-85	531	-9.45	8958	-3.44	4948	4.59	235	-1.47	1419	-47.44	91	1720.00
	85-86	450	-15.25	5209	-7.57	2978	-37.99	622	77.18	3508	146.65	1	-98.90
	86-87	234	-48.20	4122	-50.34	781	-73.78	4629	681.23	33366	853.31	0	-100.00
	87-88	197	-15.81	3297	-20.01	1872	139.69	791	-83.13	3694	-88.93	618	100.00
LUSAKA	83-84	30	n.a.	520	n.a.	9	n.a.	263	n.a.	2100	n.a.	0	n.a.
	84-85	2	-93.33	10	-98.08	5	-44.44	229	-5.33	2712	29.14	2271	n.a.
	85-86	n.a.	n.a.	n.a.	n.a.	252	n.a.	372	3.14	4780	76.25	0	n.a.
	86-87	18	n.a.	76	n.a.	0	n.a.	279	-9.65	776	-83.77	0	n.a.
	87-88	66	266.67	1756	4777.78	1740	100.00	111	-67.14	367	-52.13	0	n.a.
NORTHERN	83-84	7527	n.a.	69220	n.a.	41928	n.a.	3992	n.a.	32700	n.a.	977	n.a.
	84-85	4575	42.14	75020	17.19	41602	-0.52	4965	26.52	41397	26.13	2353	140.75
	85-86	3822	-23.62	65538	-12.56	28369	-31.85	10552	114.65	46008	9.99	2247	37.99
	86-87	3135	-17.50	41017	-37.45	20210	-28.51	8124	-23.02	35641	23.65	2192	-32.49
	87-88	3722	18.76	48548	17.27	32562	61.15	6721	-17.52	62271	4.41	4213	92.28
N/WESTERN	83-84	320	n.a.	4308	n.a.	2928	n.a.	552	n.a.	4608	n.a.	8	n.a.
	84-85	392	3.16	5747	33.38	4226	7.29	472	-12.99	4815	4.46	105	102.20
	85-86	912	126.63	10318	79.68	3732	-18.08	760	59.82	3502	-27.16	293	179.85
	86-87	329	-59.51	5877	-43.11	1726	-54.31	1531	97.50	13335	298.14	49	-83.62
	87-88	547	66.77	6397	15.86	5839	237.33	2746	82.94	3258	-76.55	1138	2270.83
SOUTHERN	83-84	28	n.a.	100	n.a.	18	n.a.	352	n.a.	1390	n.a.	1	n.a.
	84-85	n.a.	n.a.	n.a.	n.a.	65	35.42	24	-93.29	170	-87.77	47	4600.00
	85-86	4	n.a.	20	n.a.	15	-76.92	100	194.12	500	194.12	439	834.04
	86-87	0	-100.00	0	-100.00	0	-100.00	372	433.00	1978	295.60	0	n.a.
	87-88	0	n.a.	0	n.a.	0	n.a.	335	71.61	5143	160.01	152	100.00
WESTERN	83-84	2600	n.a.	22300	n.a.	12904	n.a.	122	n.a.	248	n.a.	0	n.a.
	84-85	3218	23.77	30249	35.65	22509	75.77	17	-94.35	39	-93.75	0	n.a.
	85-86	4020	27.10	37260	23.18	27991	23.72	603	4515.39	2400	5853.85	1831	n.a.
	86-87	4189	0.46	37274	0.04	22215	-27.52	362	-40.03	1440	-40.00	345	n.a.
	87-88	5132	24.98	46386	25.04	31198	54.33	15	-95.83	95	-93.40	2	-100.00

		Area (ha)	% change	Feed. (kgs)	% change	Sales (kgs)	% change	[illegible]	% change	Feed. (kgs)	% change	Sales (kgs)	% change
ZAMBIA	93-94	21790	n.a.	[illegible]	n.a.	[illegible]	n.a.	[illegible]	n.a.	[illegible]	n.a.	[illegible]	n.a.
	94-95	24911	[illegible]	[illegible]	[illegible]	[illegible]	[illegible]	[illegible]	[illegible]	[illegible]	[illegible]	[illegible]	[illegible]
	95-96	55550	[illegible]	[illegible]	[illegible]	[illegible]	[illegible]	[illegible]	[illegible]	[illegible]	[illegible]	[illegible]	[illegible]
	96-97	47484	[illegible]	[illegible]	[illegible]	[illegible]	[illegible]	[illegible]	[illegible]	[illegible]	[illegible]	[illegible]	[illegible]
	97-98	41951	[illegible]	[illegible]	[illegible]	[illegible]	[illegible]	[illegible]	[illegible]	[illegible]	[illegible]	[illegible]	[illegible]
CENTRAL	93-94	2700	n.a.	[illegible]	n.a.	[illegible]	n.a.	[illegible]	n.a.	[illegible]	n.a.	[illegible]	n.a.
	94-95	2941	[illegible]	[illegible]	[illegible]	[illegible]	[illegible]	[illegible]	[illegible]	[illegible]	[illegible]	[illegible]	[illegible]
	95-96	7200	[illegible]	[illegible]	[illegible]	[illegible]	[illegible]	[illegible]	[illegible]	[illegible]	[illegible]	[illegible]	[illegible]
	96-97	5611	[illegible]	[illegible]	[illegible]	[illegible]	[illegible]	[illegible]	[illegible]	[illegible]	[illegible]	[illegible]	[illegible]
	97-98	7458	[illegible]	[illegible]	[illegible]	[illegible]	[illegible]	[illegible]	[illegible]	[illegible]	[illegible]	[illegible]	[illegible]
COPPERBELT	93-94	4702	n.a.	[illegible]	n.a.	[illegible]	n.a.	[illegible]	n.a.	[illegible]	n.a.	[illegible]	n.a.
	94-95	4622	[illegible]	[illegible]	[illegible]	[illegible]	[illegible]	[illegible]	[illegible]	[illegible]	[illegible]	[illegible]	[illegible]
	95-96	11662	[illegible]	[illegible]	[illegible]	[illegible]	[illegible]	[illegible]	[illegible]	[illegible]	[illegible]	[illegible]	[illegible]
	96-97	4049	[illegible]	[illegible]	[illegible]	[illegible]	[illegible]	[illegible]	[illegible]	[illegible]	[illegible]	[illegible]	[illegible]
	97-98	4744	[illegible]	[illegible]	[illegible]	[illegible]	[illegible]	[illegible]	[illegible]	[illegible]	[illegible]	[illegible]	[illegible]
EASTERN	93-94	1922	n.a.	[illegible]	n.a.	[illegible]	n.a.	[illegible]	n.a.	[illegible]	n.a.	[illegible]	n.a.
	94-95	1209	[illegible]	[illegible]	[illegible]	[illegible]	[illegible]	[illegible]	[illegible]	[illegible]	[illegible]	[illegible]	[illegible]
	95-96	1112	[illegible]	[illegible]	[illegible]	[illegible]	[illegible]	[illegible]	[illegible]	[illegible]	[illegible]	[illegible]	[illegible]
	96-97	1157	[illegible]	[illegible]	[illegible]	[illegible]	[illegible]	[illegible]	[illegible]	[illegible]	[illegible]	[illegible]	[illegible]
	97-98	2726	[illegible]	[illegible]	[illegible]	[illegible]	[illegible]	[illegible]	[illegible]	[illegible]	[illegible]	[illegible]	[illegible]
LUAPULA	93-94	172	n.a.	[illegible]	n.a.	[illegible]	n.a.	[illegible]	n.a.	[illegible]	n.a.	[illegible]	n.a.
	94-95	73	[illegible]	[illegible]	[illegible]	[illegible]	n.a.	[illegible]	[illegible]	[illegible]	[illegible]	[illegible]	[illegible]
	95-96	568	[illegible]	[illegible]	[illegible]	[illegible]	[illegible]	[illegible]	[illegible]	[illegible]	[illegible]	[illegible]	[illegible]
	96-97	791	[illegible]	[illegible]	[illegible]	[illegible]	[illegible]	[illegible]	[illegible]	[illegible]	[illegible]	[illegible]	[illegible]
	97-98	187	[illegible]	[illegible]	[illegible]	[illegible]	[illegible]	[illegible]	[illegible]	[illegible]	[illegible]	[illegible]	[illegible]
LUSAKA	93-94	1217	n.a.	[illegible]	n.a.	[illegible]	n.a.	[illegible]	n.a.	[illegible]	n.a.	[illegible]	n.a.
	94-95	1192	[illegible]	[illegible]	[illegible]	[illegible]	[illegible]	[illegible]	[illegible]	[illegible]	[illegible]	[illegible]	[illegible]
	95-96	562	[illegible]	[illegible]	[illegible]	[illegible]	[illegible]	[illegible]	[illegible]	[illegible]	[illegible]	[illegible]	[illegible]
	96-97	1027	[illegible]	[illegible]	[illegible]	[illegible]	[illegible]	[illegible]	[illegible]	[illegible]	[illegible]	[illegible]	[illegible]
	97-98	2205	[illegible]	[illegible]	[illegible]	[illegible]	[illegible]	[illegible]	[illegible]	[illegible]	[illegible]	[illegible]	[illegible]
NORTHERN	93-94	220	n.a.	[illegible]	n.a.	[illegible]	n.a.	[illegible]	n.a.	[illegible]	n.a.	[illegible]	n.a.
	94-95	37	[illegible]	[illegible]	[illegible]	[illegible]	[illegible]	[illegible]	[illegible]	[illegible]	[illegible]	[illegible]	[illegible]
	95-96	510	[illegible]	[illegible]	[illegible]	[illegible]	[illegible]	[illegible]	[illegible]	[illegible]	[illegible]	[illegible]	[illegible]
	96-97	159	[illegible]	[illegible]	[illegible]	[illegible]	[illegible]	[illegible]	[illegible]	[illegible]	[illegible]	[illegible]	[illegible]
	97-98	196	[illegible]	[illegible]	[illegible]	[illegible]	[illegible]	[illegible]	[illegible]	[illegible]	[illegible]	[illegible]	[illegible]
NWESTERN	93-94	2038	n.a.	[illegible]	n.a.	[illegible]	n.a.	[illegible]	n.a.	[illegible]	n.a.	[illegible]	n.a.
	94-95	1215	[illegible]	[illegible]	[illegible]	[illegible]	[illegible]	[illegible]	[illegible]	[illegible]	[illegible]	[illegible]	[illegible]
	95-96	4512	[illegible]	[illegible]	[illegible]	[illegible]	[illegible]	[illegible]	[illegible]	[illegible]	[illegible]	[illegible]	[illegible]
	96-97	14373	[illegible]	[illegible]	[illegible]	[illegible]	[illegible]	[illegible]	[illegible]	[illegible]	[illegible]	[illegible]	[illegible]
	97-98	6112	[illegible]	[illegible]	[illegible]	[illegible]	[illegible]	[illegible]	[illegible]	[illegible]	[illegible]	[illegible]	[illegible]
SOUTHERN	93-94	5722	n.a.	[illegible]	n.a.	[illegible]	n.a.	[illegible]	n.a.	[illegible]	n.a.	[illegible]	n.a.
	94-95	7182	[illegible]	[illegible]	[illegible]	[illegible]	[illegible]	[illegible]	[illegible]	[illegible]	[illegible]	[illegible]	[illegible]
	95-96	17779	[illegible]	[illegible]	[illegible]	[illegible]	[illegible]	[illegible]	[illegible]	[illegible]	[illegible]	[illegible]	[illegible]
	96-97	6312	[illegible]	[illegible]	[illegible]	[illegible]	[illegible]	[illegible]	[illegible]	[illegible]	[illegible]	[illegible]	[illegible]
	97-98	11775	[illegible]	[illegible]	[illegible]	[illegible]	[illegible]	[illegible]	[illegible]	[illegible]	[illegible]	[illegible]	[illegible]
WESTERN	93-94	7700	n.a.	[illegible]	n.a.	[illegible]	n.a.	[illegible]	n.a.	[illegible]	n.a.	[illegible]	n.a.
	94-95	2195	[illegible]	[illegible]	[illegible]	[illegible]	[illegible]	[illegible]	[illegible]	[illegible]	[illegible]	[illegible]	[illegible]
	95-96	11112	[illegible]	[illegible]	[illegible]	[illegible]	[illegible]	[illegible]	[illegible]	[illegible]	[illegible]	[illegible]	[illegible]
	96-97	5179	[illegible]	[illegible]	[illegible]	[illegible]	[illegible]	[illegible]	[illegible]	[illegible]	[illegible]	[illegible]	[illegible]
	97-98	1964	[illegible]	[illegible]	[illegible]	[illegible]	[illegible]	[illegible]	[illegible]	[illegible]	[illegible]	[illegible]	[illegible]

NOTE: [illegible]

Best Available Document

242

Table e 1987-88 PRELIMINARY FCFC CROP FORECAST (PART 2 OF 2)

		V. TOBACCO						B. TOBACCO					
		Area (ha)	% change	Prod. (Kgs)	% change	Sales (Kgs)	% change	Area (ha)	% change	Prod. (Kgs)	% change	Sales (Kgs)	% change
ZAMBIA	83-84	2090	-4.15	2489933	9.19	2488612	9.16	744	100.00	500939	100.00	497000	100.00
	84-85	1459	-29.86	2137078	-14.17	2132366	-14.32	643	-13.50	533481	6.89	565830	13.85
	85-86	2840	94.65	4209460	96.97	3352100	57.20	640	-1.37	547140	2.18	544940	-3.67
	86-87	1254	-55.85	2900001	-31.11	2900001	-13.49	3557	455.78	651064	18.99	651064	19.47
	87-88	4295	242.50	3743100	29.07	3743100	29.07	1468	-58.73	644545	2.46	644545	-1.00
CENTRAL	83-84	710	-4.05	1109633	13.69	1109633	13.69	0	n.a.	n.a.	n.a.	n.a.	n.a.
	84-85	393	-44.65	806888	-27.28	806888	-27.28	0	n.a.	n.a.	n.a.	163	100.00
	85-86	1100	179.90	2217460	174.82	1360100	68.56	0	n.a.	n.a.	n.a.	n.a.	n.a.
	86-87	338	-69.27	1095036	-50.62	1095036	-19.49	1	n.a.	195	n.a.	195	n.a.
	87-88	1498	343.20	1298250	18.56	1298250	18.56	15	1400.00	7500	3746.15	7500	3746.15
COPPERBELT	83-84	10	100.00	4200	100.00	4090	100.00	0	n.a.	n.a.	n.a.	n.a.	n.a.
	84-85	18	80.00	3690	-12.14	137	-96.59	0	n.a.	n.a.	n.a.	14372	100.00
	85-86	45	150.00	47200	1233.33	47200	35912.41	0	n.a.	n.a.	n.a.	n.a.	n.a.
	86-87	15	-66.67	5007	-89.82	5007	-89.82	50	n.a.	16535	n.a.	16535	n.a.
	87-88	40	166.67	24000	379.33	24000	379.33	0	-100.00	0	-100.00	0	-100.00
EASTERN	83-84	780	-19.15	271800	-16.11	271717	-16.14	744	100.00	500939	100.00	497000	100.00
	84-85	240	-36.84	120000	-55.85	119551	-56.00	643	-13.50	533481	6.89	535481	7.74
	85-86	440	83.33	327420	172.85	327420	173.87	605	-6.78	519940	-2.70	517740	-3.31
	86-87	206	-53.18	162831	-50.27	162831	-50.27	3366	455.36	616106	18.50	616106	19.00
	87-88	368	78.64	241810	48.50	241810	48.50	977	-70.97	488700	-20.68	488700	-20.68
LUAPULA	83-84	n.a.		n.a.		n.a.		n.a.		n.a.		n.a.	n.a.
	84-85	n.a.		n.a.		n.a.		n.a.		n.a.		n.a.	n.a.
	85-86	n.a.		n.a.		n.a.		n.a.		n.a.		n.a.	n.a.
	86-87	n.a.		n.a.		n.a.		n.a.		n.a.		n.a.	n.a.
	87-88	10	100.00	6000	100.00	6000	100.00	247	100.00	43600	100.00	43600	100.00
LUSAKA	83-84	n.a.		n.a.		n.a.		n.a.	n.a.	0.00	n.a.	n.a.	n.a.
	84-85	n.a.		n.a.		62404		n.a.	n.a.	0.00	n.a.	4571	100.00
	85-86	n.a.		n.a.		n.a.		35	100.00	27200	n.a.	27200	495.06
	86-87	n.a.		n.a.		n.a.		27	-13.14	5273	-80.61	5273	-80.61
	87-88	450	n.a.	270000	n.a.	270000	n.a.	0	-100.00	0	-100.00	0	-100.00
NORTHERN	83-84	20	100.00	7700	-2.75	7262	1.30	0	n.a.		n.a. -		n.a.
	84-85	10	-50.00	4000	-45.21	3450	-52.49	0	n.a.		n.a. -		n.a.
	85-86	0	-100.00	n.a.	n.a.	n.a.	n.a.	0	n.a.		n.a. -		n.a.
	86-87	9	n.a.	5429	n.a.	5428	n.a.	0	n.a.		n.a.		n.a.
	87-88	39	333.33	27580	408.11	27580	408.11	39	100.00	18800	100.00	18800	100.00
N/WESTERN	83-84	n.a.		n.a.		n.a.		0	n.a.		n.a. -		n.a.
	84-85	n.a.		n.a.		n.a.		0	n.a.		n.a. -		n.a.
	85-86	n.a.		n.a.		n.a.		0	n.a.		n.a. -		n.a.
	86-87	n.a.		n.a.		n.a.		0	n.a.		n.a.		n.a.
	87-88	35	100.00	18220	100.00	18220	100.00	32	100	11400	100	11400	100
SOUTHERN	83-84	730	12.05	1075000	24.23	1075000	24.33	0	n.a.		n.a. -		n.a.
	84-85	730	-21.51	1162500	8.14	1162348	8.13		n.a.		n.a.	11243	100.00
	85-86	1140	56.16	1538600	32.35	1538600	32.37	0	n.a.		n.a.		-100.00
	86-87	628	-44.71	1577422	2.52	1577422	2.52	71	n.a.	12755	n.a.	12755	n.a.
	87-88	1694	169.75	1605590	1.79	1603590	1.79	145	104.23	60545	367.35	60545	367.35
WESTERN	83-84	30	-76.92	22000	-80.96	21000	-81.83		n.a.		n.a.		n.a.
	84-85	68	126.67	40000	81.82	39992	90.44	0	n.a.		n.a.		n.a.
	85-86	115	69.12	76780	91.95	76780	91.99	0	n.a.		n.a.		n.a.
	86-87	58	-49.57	54277	-29.31	54277	-29.31	0	n.a.		n.a.		n.a.
	87-88	161	177.59	251650	363.64	251650	363.64	14	100.00	14000	100.00	14000	100.00

NOTE: Estimates for tobacco submitted by the National Tobacco Company Limited Have been accepted as the official estimates.

243

Table 4 1987-89 PRELIMINARY FSRU CROP FORECAST WITH 5 YR PERFORMANCE (PART 1 OF 2)

		MILLET						CASSAVA					
		Area (ha)	% change	Prod. (bags)	% change	Sales (bags)	% change	Area (ha)	% change	Prod. (bags)	% change	Sales (bags)	% change
ZAMBIA	83-84	19838	n.a.	152240	n.a.	181	n.a.	n.a.		n.a.		181	n.a.
	84-85	22374	17.57	216017	42.97	600	231.49	n.a.		n.a.		600	231.49
	85-86	18528	-17.23	129573	-40.02	3196	431.00	n.a.		n.a.		3939	556.33
	86-87	43569	135.25	336248	159.51	2187	-31.36	n.a.		n.a.		1119	-71.58
	87-88	35589	-18.50	298782	-13.52	5148	135.83	55545	n.a.	526263	n.a.	11678	943.61
CENTRAL	83-84	378	n.a.	1590	n.a.	0	n.a.	-		-		0	n.a.
	84-85	965	160.81	7573	376.29	0	n.a.	-		-		0	n.a.
	85-86	1128	16.86	7820	3.26	0	n.a.	-		-		0	n.a.
	86-87	480	-57.14	1545	-80.24	0	n.a.	-		-		0	n.a.
	87-88	500	4.17	2500	61.81	0	n.a.	0		0		0	n.a.
COPPERBELT	83-84	28	n.a.	320	n.a.	0	n.a.	-		-		0	n.a.
	84-85	87	335.00	614	91.88	1	n.a.	-		-		1	n.a.
	85-86	18	-98.51	70	-88.60	4	n.a.	-		-		0	n.a.
	86-87	46	360.00	460	557.14	0	n.a.	-		-		0	n.a.
	87-88	142	208.78	1276	177.39	0	n.a.	363		7591		0	n.a.
EASTERN	83-84	1760	n.a.	7000	n.a.	0	n.a.	-		-		0	n.a.
	84-85	0	n.a.	n.a.	n.a.	6	n.a.	-		-		6	n.a.
	85-86	328	n.a.	2610	n.a.	0	-100.00	-		-		0	-100.00
	86-87	3339	778.68	26710	923.37	0	n.a.	-		-		0	n.a.
	87-88	4415	32.23	33554	25.62	0	n.a.	0		0		0	n.a.
LUAPULA	83-84	740	n.a.	5123	n.a.	9	n.a.	-		-		9	n.a.
	84-85	932	25.95	6122	-10.75	25	177.78	-		-		25	177.78
	85-86	70	-92.49	500	-93.68	10	-60.00	-		-		13	-48.00
	86-87	13932	19602.86	147863	20181.35	96	760.00	-		-		313	2307.69
	87-88	8095	-41.90	67494	-54.11	1664	1834.88	13671		338932		266	-15.02
LUSAKA	83-84	n.a.	n.a.	n.a.	n.a.	n.a.	n.a.	-		-		n.a.	n.a.
	84-85	n.a.	n.a.	n.a.	n.a.	119	n.a.	-		-		119	n.a.
	85-86	n.a.	n.a.	n.a.	n.a.	n.a.	n.a.	-		-		228	n.a.
	86-87	n.a.	n.a.	n.a.	n.a.	n.a.	n.a.	-		-		0	n.a.
	87-88	193	n.a.	371	n.a.	0	n.a.	0		0		0	n.a.
NORTHERN	83-84	6200	n.a.	73200	n.a.	109	n.a.	-		-		108	n.a.
	84-85	9012	45.35	91847	25.32	192	77.78	-		-		192	77.78
	85-86	6338	-29.76	44720	-51.77	46	-76.24	-		-		0	-100.00
	86-87	13324	109.91	120715	172.95	676	28647.83	-		-		0	n.a.
	87-88	9525	-27.97	94831	-21.57	994	47.04	8457		52576		0	n.a.
N/WESTERN	83-84	142	n.a.	1378	n.a.	2	n.a.	-		-		2	n.a.
	84-85	1022	652.14	10422	683.61	15	650.00	-		-		15	650.00
	85-86	938	-11.69	6500	-37.63	1096	7140.00	-		-		392	2513.33
	86-87	1040	11.03	4672	-28.12	409	-62.34	-		-		806	105.61
	87-88	189	-87.62	1091	-76.65	99	-75.79	12614		111889		99	-87.84
SOUTHERN	83-84	2228	n.a.	6720	n.a.	58	n.a.	-		-		58	n.a.
	84-85	3752	68.47	10852	58.23	96	65.52	-		-		96	65.52
	85-86	278	-92.16	2818	-74.04	208	117.71	-		-		724	654.17
	86-87	4104	1305.19	9571	265.17	19	-90.91	-		-		0	-100.00
	87-88	4808	17.15	52962	455.69	158	689.47	152		1920		0	n.a.
WESTERN	83-84	7500	n.a.	51938	n.a.	4	n.a.	-		-		4	n.a.
	84-85	6566	-12.45	87757	71.35	146	3550.00	-		-		146	3550.00
	85-86	9318	41.79	65143	-25.46	1671	1154.11	-		-		2907	1823.97
	86-87	7404	-20.47	25352	-61.08	997	-45.52	-		-		0	-100.00
	87-88	7723	4.31	36703	44.77	2223	123.07	12873		113376		11314	100.00

WHEAT

		Area (ha)	% change	Prod. (bags)	% change	Sales (bags)	% change
ZAMBIA	83-84	-		-		-	-
	84-85	-		-		-	-
	85-86	6831	n.a.	312910	n.a.	33833	n.a.
	86-87	6883	14.13	446818	42.79	42232	24.84
	87-88	1735	-74.79	77500	-82.65	68130	61.32
CENTRAL	83-84	-		-		-	-
	84-85	-		-		28300	n.a.
	85-86	1029	n.a.	56500	n.a.	2	-99.99
	86-87	747	-26.76	52867	-9.63	10022	501000.00
	87-88	3	-99.60	60	-99.89	68	-99.40
COPPERBELT	83-84	-		-		-	-
	84-85	-		-		-	-
	85-86	900	n.a.	56500	n.a.	-	-
	86-87	1642	82.44	124000	119.47	7244	n.a.
	87-88	800	-51.28	55106	-55.56	55106	660.71
EASTERN	83-84	-		-		-	
	84-85	-		-		-	
	85-86	-		-		-	
	86-87	-		-		-	
	87-88	-		-		-	
LUAPULA	83-84	-		-		-	
	84-85	-		-		-	
	85-86	-		-		-	
	86-87	-		-		-	
	87-88	2		21		14	
LUSAKA	83-84	-		-		-	-
	84-85	-		-		-	-
	85-86	2489	n.a.	133330	n.a.	460	n.a.
	86-87	2414	-3.01	149311	11.99	17811	3962.18
	87-88	-		-		-	
NORTHERN	83-84	-		-		-	-
	84-85	-		-		-	-
	85-86	10	n.a.	-		567	n.a.
	86-87	40	300.00	2110	n.a.	2233	293.83
	87-88	630	1475.00	9321	341.75	-	
N/WESTERN	83-84	-		-		-	
	84-85	-		-		-	
	85-86	-		-		-	
	86-87	-		-		-	
	87-88	-		-		-	
SOUTHERN	83-84	-		-		-	-
	84-85	-		-		-	-
	85-86	1612	n.a.	64590	n.a.	14250	n.a.
	86-87	2840	26.55	118530	83.54	3722	-73.88
	87-88	300	-85.29	13000	-89.03	12950	247.93
WESTERN	83-84	-		-		-	
	84-85	-		-		-	
	85-86	-		-		-	
	86-87	-		-		-	
	87-88	-		-		-	

Table 2. Marketed Output of Selected Agricultural Commodities

	Maize 90 kg	Sunflower 90 kg	Soybeans 90 kg	Rice 80 kg	Groundnuts 80 kg	Wheat 90 kg	Cotton	Sorghum 90 kg	Tobacco	Millet 90 kg
	Thousands						-Tons-	-Thousands-	-Tons-	-Thousands-
1978-79	5,192	238	14	23	34	73	1,490	1.7	4,600	0.0
1979-80	5,446	345	39	28	25	106	2,290	1.0	4,100	2.6
1980-81	7,734	385	41	33	16	128	1,680	1.4	2,400	2.4
1981-82	5,705	426	57	30	9	143	1,280	1.7	1,900	N.A.
1982-83	5,901	609	77	63	13	113	2,070	1.1	2,300	1.1
1983-84	6,347	808	106	58	14	49	4,390	3.2	2,500	0.2
1984-85	7,069	510	178	79	30	N.A.	3,030	12.4	2,200	0.5
1985-86	10,500	475	130	101	50	N.A.	3,230	20.0	3,400	1.0

N.A. = not available.

VOLUME III. ZAMS MINOR CROPS STUDY

247

TABLE OF CONTENTS

Chapter		Page
I.	INTRODUCTION AND SUMMARY	1
	Historic Overview of Agricultural Development and the Dominance of Maize	2
	Comments on the Project Identification Document	6
	Comments on the Work Plan	8
II.	REVIEW OF POSSIBLE INTERVENTIONS IN THE SPECIFIED MINOR CROPS	9
	Introduction	9
	Sorghum for the Chibuku Beer Industry	9
	Preserved Fruit and Vegetables	11
III.	OTHER PROPOSED INTERVENTIONS	13
	Crop-Related Interventions	13
	Fruits and Vegetables for the Export Market	17
	Agroclimatic Conditions	17
	Beans	33
	Rice	34
	Maize and Fertilizer	35
	Input Related	36
	Infrastructural Support	39
	Financing	39
APPENDIX 1.	STATEMENT OF WORK	41

I. INTRODUCTION AND SUMMARY

This report was written in response to a request by USAID/Zambia for a contractor to gather data on specific minor crops to assist consultants employed by USAID to assemble information relative to the ZAMS Project. The Terms of Reference for this study are given in Appendix I.

Two weeks of field work preceded a week of report writing by Agmmark. During this period, Agmmark maintained a constant liaison with USAID personnel and with the RRNA team. In particular, discussions centered on the predominance of maize in the agricultural economy and the degree to which this dominance affected the production and marketing of almost all other crops for the local market. As a result of these discussions, and from information gathered in the field, it was agreed that Agmmark would look at a wider spectrum of minor crops than those specifically mentioned in the Terms of Reference, although this divergence was implied by the Terms of Reference.

Chapter I of this volume attempts first to give a historical overview of how maize became so dominant. An understanding of this process is fundamental to an understanding of the current situation. This chapter examines the main features and assumptions set out in the Project Identification Document, which is the basis for this study, and draws attention to the fact that the effect of the dominance of maize was, to some extent, underestimated. Comments are made on the validity of some of the assumptions made in the PID in light of the experience of Agmmark in Zambia, and on the Terms of Reference.

Data on the production, marketing, and processing of the crops specified in the TOR -- sorghum, millet, cassava, and fruit and vegetables for the local market -- have been well documented in Volumes I and II and little can be added by Agmmark, which concurs with the general findings of the RRNA team. The most important aspect to emerge is the low volume of these crops that are marketed in any formal sense, and the relative lack of opportunities for intervention in the current economic environment. In addition, under the IFAD Smallholder Services Rehabilitation Project, which is about to be implemented and which addresses the same minor crops as this study, most of the possible interventions such as the provision of village level processing machinery, were included. However, additional opportunities would exist, if any changes were to be made in government subsidy policies on fertilizer and maize, leading to changes in production patterns within the country.

In Chapter III, attention is drawn to other interventions that fall within

the scope of the ZAMS Project but are not related to the specified minor crops. These interventions are sub-divided into four areas:

- Crop related
- Input related
- Infrastructural support
- Financing

In each area, specific project or sub-project possibilities have been outlined, including in some cases, broad cost estimates. While some are brief, reflecting lack of time to collect the required data, others, which Agmmark has previously examined, are given in more detail. In most cases, these projects include private enterprise components.

This report provides data for the compilation, by the RRNA team, of a final document for the ZAMS project. Many of the components in Chapter III form the basis of commercially viable projects, which are currently in very short supply in Zambia and which, in part, result from Agmmark's previous endeavors. Although Agmmark would welcome their inclusion in any USAID project, the information is 'intellectual property.' If they are not included in the ZAMS project, Agmmark would like the information to remain confidential.

Historic Overview of Agricultural Development and the Dominance of Maize

Agriculture in Zambia today is the direct result of commercial, and later governmental decisions, made over the past 80 years, and not a natural development. At the turn of the century, Zambia had a population of less than half a million in clearly defined tribal and ecological areas. The limited population was able to live in balance with nature, and had developed sustainable food producing systems. Each group lived on food and livestock suited to their needs for the year, whatever the rainfall. Disease was the limiting factor on population expansion, not food.

Main tribal areas and foods were

Northern Bemba	Fish, cassava, millet, beans
Luapula	Fish, cassava, millet, beans
Eastern Angoni	Beef, sorghum, millet, beans, groundnuts
Central Lenje	Chicken, sorghum, maize, beans
Southern Tonga	Beef, fish, maize, sorghum, beans
Western Lozi	Beef, fish, millet, sorghum
Northwestern Kaonde	Fish, cassava, millet, beans, sorghum

The predominate food crops were cassava, sorghum, millet, and beans.

250

The first two decades of the century saw the industrial development of minerals (copper and lead) in the central and northern areas of the Kafue River Basin. Laborers for the mines were predominantly inhabitants of Northern, Luapula, and North Western Provinces, along with Europeans coming initially from Britain and America, and a later influx from the mining areas of South Africa.

Contrary to expectations, food consumption by mine laborers did not follow traditional tribal patterns, mainly because there was no established production or food distribution system in the demand areas. In addition, the mining areas were not considered suitable for agriculture.

Although beef was available from traders who could walk their animals to market, a basic cereal had to be available in increasing quantities. When a rail line to the south was established for exports, attention turned to South Africa for a food source. The foods most readily available were maize and beans.

In 1924, the areas defined as North Eastern and North Western Rhodesia were consolidated for administrative purposes into Northern Rhodesia, destined to become Zambia in 1963. About this time, the Administration decided that commercial farms should be established on the line of rail to produce food for the copper mines and for the expatriate community of commercial and administrative personnel. Initially, British ex-servicemen settled here; they were encouraged to take up land for food production. As word of good soils and climate spread, the farming population increased and produced not only maize and other food crops for the mines but also tobacco and cotton as cash crops. Beef was an offshoot of the need for motive power, being first used as draft oxen before being slaughtered for the meat trade.

However, commercial farming areas were limited from the start to that which was believed sufficient to feed the urban and mining population, and no thought was given to export crops except for cotton and tobacco. The area allocated for commercial production was approximately 2.5 percent of the total land area. Production from village farmers was limited to the Central and Southern Province close to the line of rail.

Until the 1960s, mine employees received basic food rations, and it was easier to supply them with maize and beans grown predominantly by the commercial farmers than to arrange marketing systems to bring in their traditional foodstuffs, which were grown by smallholders in inaccessible areas. Over time, this situation established the attitude that maize was a superior food for those who had entered the cash economy. Milling plants were established on the Copperbelt and line of rail towns, while the rural people continued to consume their traditional foods and locally grown maize, which was usually ground by hand in the villages.

Until the 1950s, the only suitable transport system was the North-South railway; therefore, commercial food production was not encouraged away from the line of rail. Thus, events of the first 50 years of the century established maize as the urban dwellers' food; the traditional crops remained only for local village consumption as food and beer. Marketing became formalized in

251

1938, with the need to produce for the mines and to stop imports as the rail system was restricted by war usage, and South Africa moved into the world maize market. The initial marketing body was the Maize Control Board, which together with the Farmers' Co-Operative (Lusaka) was given monopoly rights on all commercial maize production, and later became buyers of village crops near the line of rail. Standard prices were fixed for deliveries to line of rail depots, and rural purchases reflected true collection costs. The Maize Control Board continued as a commercial operation until Independence, when it became the government's arm for spreading development into the rural areas. During the Federation (1956-63), trade restrictions between Northern and Southern Rhodesia were removed, and Southern Rhodesia was able to take advantage of the Copperbelt market with its advanced agricultural systems and efficient rail network. These maize movements were essentially backloads for copper exports and were charged at low rates.

During this period, commercial agriculture was a federal responsibility, while smallholder production remained a territorial responsibility. This led to a rapid improvement in commercial agriculture, as new methods and hybrid maize seed developed in Southern Rhodesia were adopted. Yields doubled on commercial farms, and by 1962, the country was self-sufficient in maize production. Tobacco was the major export crop, and cotton developed as a cash crop. Beef production was expanding, but 50 percent of requirements were still imported.

With independence, major improvements in the road networks allowed the official marketing system to be expanded into all areas of Zambia. The National Agricultural Marketing Board (NAMBoard) was established to absorb the Maize Control Board and to expand controlled marketing of most crops in all areas. Meanwhile, the Cold Storage Board was established as the official marketing system for beef, and the Dairy Produce Board was established as the controlling body for milk products.

The stage was now set for economic control of agriculture by the Ministry of Agriculture, without the safety valve of a free market. Fixed product prices for all agricultural production in the country became the official policy This was followed by fixed input prices for seed and fertilizer countrywide. These moves led to an initial improvement in rural incomes. The costs of these policies were covered partly by government subsidies, and partly by the commercial farming sector, which lost its geographical advantage while having to absorb increased input prices and new labor rates.

The initial benefits enjoyed by the rural community, both small-scale farmers and the workers on commercial farms, eroded with time as product price fixing followed the policy of 'cheap food for the urban dwellers.' As rural incomes dropped, the attraction of urban living increased. Government staffing increased rapidly and the construction industry absorbed large numbers of unskilled workers.

Once again, consumption patterns changed as cheap maize meal became the standard cereal, alongside an increasing demand for wheat products in the urban areas. Production of cassava, millet, and sorghum dropped as official pricing held prices low in relation to maize. Meanwhile, commercial producers

of all crops and livestock faced a financial crisis, and 60 percent of the units ceased production. For a number of years, these farms lay idle until State agricultural units were established and loans became available for Zambian farmer resettlement.

With increased urban demand and reduced local production, the country became a food importer, and it remains so today; however, there were some encouraging moves:

- Poultry production has never been officially controlled, and Zambia moved from almost 100 percent imports to self-sufficiency in 10 years. This was a success story that introduced a large number of Zambian producers to commercial agriculture.

- Vegetable production, except for a brief period, was unofficially marketed and priced. Growing from approximately 80 percent import dependency at independence, the industry now supplies a wide range of vegetables and fruit. An export market is being developed.

- Beef was 50 percent deficient in 1975, but then official marketing collapsed in favor of the free market, resulting in a rapid increase in production to the present position of self-sufficiency with some exports.

- Tobacco production fell from 15 million kg at independence to 1.5 million kg in 1983, but with the commercial fixed prices of recent years it is now expanding rapidly.

- Sunflower production expanded rapidly, although there has been a recent decline because of inadequate pricing. Cotton has followed the same trend.

- Soyabeans are becoming a success story with good producer pricing encouraging rapid expansion.

- Groundnuts, a major crop of the Eastern Province, were exported in large quantities until official pricing caused a major reduction in favor of maize, which has to be transported some 1,000 km to the consumption centers. Recent improved pricing is resulting in some expansion, but the ill effects of official policies will be felt for years to come.

With maize-meal and vegetable oils established as the major foods of the urban dweller, official control on standards and prices came into effect. It worked reasonably effectively while there was limited inflation, but it was not able to cope with rapid changes in production and transport costs. As commercial farmers moved away from maize, village production all over Zambia increased because of countrywide input and producer prices, thereby increasing the cost to government through subsidies. Production prices are fixed by the

Ministry of Agriculture without regard to the buying and transport charges faced by NAMBoard and the Co-ops.

With the oil crisis, transport costs increased at a higher rate than crop production costs. In 1988, the costs of collecting and transporting maize from many rural areas are up to 70 percent of the farmer producer price. These costs are covered by government subsidies, which are placing an increasing strain on the national budget. Thus, a removal of this collection subsidy, and the concomitant reduction in the price paid to farmers, would have a major effect on production in distant rural areas, which would then move away from maize to higher value crops such as beans, groundnuts, sunflower, tobacco, and possibly traditional food crops such as finger millet and sorghum. This move would be accelerated if the subsidies on fertilizer and its transport were removed, since little fertilizer is used on crops other than maize.

The current consumer subsidy on maize-meal has a major effect on demand as

- Rural families sell all their maize and buy back subsidized meal from towns. This increases both the transport and the consumer subsidy required from government.
- Urban dwellers in the smaller towns make no effort to produce their own requirements from land that is readily available.
- Smuggling becomes a very remunerative occupation. Zambia's subsidized meal is considerably cheaper than meal in Botswana, Namibia, Angola, Zaire, Tanzania, Malawi, and Mozambique, the majority of which border Zambia and have food deficits. It has been estimated that up to 20 percent of Zambia's subsidized maize-meal leaves the country unofficially.

Thus, future decisions on subsidies related to maize will have a major effect on the production of maize and all other crops. With the removal of all subsidies (fertilizer, transport, and milling), the maize requirement would probably fall to about 5 million bags allowing for official exports, encouraging other crops to be grown, and releasing some 1.5 billion kwacha per annum for development use.

Comments on the Project Identification Document

'Changes in the marketing system are required if the agricultural sector is to expand.' The implicit assumption in the Project Identification Document is that interventions in the marketing chain would lead to incremental production of minor crops, which are considered unaffected by current government interventions and control. During the field work for this study, the contractors were made very aware that this assumption is not correct. First, the subsidized price of processed maize has an overwhelming bearing on the production, consumption, and marketing of all other food crops, and to some extent industrial crops. Second, the Zambian economy is so run down that very little opportunity exists for expansion of demand in the local

market without an improvement in the general economy. However, this does not invalidate the requirement for improvements in operational efficiency of the private sector marketing system. These improvements would need to be geared to export promotion, where the only significant expansion can be made, and to those areas such as brewing for the internal market, where maize substitution could be achieved through a captured market. This, too, would require some government initiative, and would also lead to consumer price increases, although it would fulfill the aim of the ZAMS project to encourage the production and marketing of minor crops.

Within this context, the ZAMS project correctly assumes that there will be changes during its implementation period, which would lead to the reduction of subsidies in the agricultural sector, and thereby encourage the production of minor crops for the internal market. This process would be accelerated if Zambia became self-sufficient in maize. In areas of comparative geographic advantage, such self-sufficiency would probably result in a reduction of the fertilizer subsidy and a consequent swing to the production of traditional food crops that generally require less fertilizer. In addition, this swing would require a reduction in the consumer subsidy of maize products.

In addition, it must be assumed that the current value of the kwacha will be changed to bring it more into line with its real value. This would have a profound effect on the profitability of regional and international exports for agricultural production. Until such time, recourse will have to be made to facilities which effectively created a 'green kwacha.' These are outlined in Chapter III.

The target group specified in the PID is small-scale farmers and other rural inhabitants. Because that significant areas of expansion for agricultural production lie in exports and import substitution, it is likely that commercial farmers and large-scale enterprises may take the lead in this process. For example, in Kenya, the commercial farmers developed the export fruit and vegetable markets, but the smallholders now produce more than 70 percent of the exports. In addition, a number of alternative options for ZAMS outlined in Chapter III suggest ways in which both commercial and smallholder producers can work together to develop markets.

The PID recommends that handling and transport functions in the private marketing sector require improvement. Although there are constraints in these functions, any improvement would depend on increased throughput caused by increased demand; therefore, any intervention in these areas should be linked to a specific subproject rather than a national intervention.

Similarly, reducing marketing losses through improved storage and processing for the internal market would require an increase in demand for traditional food crops stimulated by an increase in the maize meal price and improvements in the purchasing power of the average Zambian. However, such interventions should be concentrated on a project-specific basis.

Grading and standardization of goods is a luxury that the Zambian public can not afford. Price alone dictates the quality of goods presented on markets, and any intervention that may increase prices would adversely affect

demand. However, in the export market, quality control is paramount, and there would be a natural spin-off in the local market for the quality-conscious expatriate community and a limited number of Zambians who are in a position to afford such luxuries.

Improvements in the skills required in the private marketing sector would be most in demand for promoting export and import substitution programmes. The traders and producers involved in marketing minor crops and fruit and vegetables for the internal market are relatively efficient within the overall constraints of the national economy and within the constraints of limited demand.

Comments on the Work Plan

In its proposal to carry out this assignment, Agmmark drew attention to a number of apparent omissions in the work plan. During the completion of the field work, and given the comments made above on the PID, additional areas were identified that were not specifically mentioned in the work plan, although they fall within the aims and objectives of the ZAMS project. These additional areas of interest to USAID are outlined in Chapter III.

II. REVIEW OF POSSIBLE INTERVENTIONS IN THE SPECIFIED MINOR CROPS

Introduction

The contractors have been unable to quantify any reasonable interventions in the production, marketing, and processing of millet or cassava. There is a small, unofficial, and probably illegal export trade of both these commodities along the long Zaire border, but little trade within Zambia itself. In addition, the IFAD Smallholder Services Rehabilitation Project has addressed the matter of cassava chipping machinery. Minor but important interventions have been identified for sorghum for the brewing of Chibuku beer, and the processing of fruit and vegetables for the local market.

Sorghum for the Chibuku Beer Industry

The formal marketing of sorghum grain is negligible and surplus production is almost exclusively marketed for consumption and brewing within the traditional areas of production; however, a potential market for a substantial quantity exists. National Breweries (Chibuku) prefers sorghum to maize grain as a raw material. They would switch to a 100 percent sorghum-based brew if they could obtain enough sorghum of the requisite varieties at a price comparable to maize.

Present Production Levels of Chibuku

National Breweries produces approximately 500,000 liters of Chibuku per day from 14 factories based in the main urban centers of the country: Lusaka, Kafue, Livingstone, Choma, Chipata, Kabwe, Ndola, Mufulira, Luanshya, Kitwe, Mansa, Chililabonbwe, Mongu, and Solwezi. Consumption patterns are seasonal depending on weather conditions, and between the hot and cold months, consumption fluctuates from 20 to 30 percent above or below the mean output shown above.

National Breweries believes that a sorghum-based brew, which is preferred by the public, would have a significant impact on the level of consumption. They anticipate a potential increase of between 15 to 25 percent, if a switch from maize to sorghum could be achieved.

Several factors contribute to the present levels of formally marketed sorghum:

- GRZ policy is to expand the production of maize into non-traditional areas by maintaining high fertilizer subsidy levels and introducing drought-tolerant, short duration maize varieties.

- The availability of subsidized maize meal, which requires less preparation than sorghum, has changed consumption patterns. The gazetted NAMBoard purchase price for sorghum of K 76 per bag does not compare favorably with the traditional market price for brewing, which ranges from K 120 to K 175 per 90-kg bag, depending upon availability.

- The present price of Chibuku is gazetted at K 0.45 per litre. This price is calculated to cover capital and recurrent costs of production with no margin for profit. Thus, the breweries are not in a position under the present price structure to offer a premium to farmers for sorghum grain.

Potential Demand for Sorghum as a Replacement for Maize

Brewing requirements are based on 210 90-kg bags per 120,000 liters of Chibuku at a consumption level of 500,000 liters per day and a brewing cycle of six days per week. The potential requirement for sorghum is 27,300 tons per annum. Present smallholder yields in traditional growing areas such as the Gwembe Valley range between 0.5 and 0.8 tons per hectare. With improved brewing varieties, such as Swazi Red, yields of 1.0 to 1.2 tons per hectare would be realistic. Average traditional farm sizes in these areas range from 1.0 to 1.5 hectares per family. On this basis, an incremental production to satisfy the breweries' requirements would involve the participation of approximately 60,000 to 80,000 farmers, assuming 25 percent of gross farm area was allocated to a cash sorghum crop.

Possible Intervention

With the objective of weaning the market off the maize brew, National Breweries should offer sorghum-based Chibuku at a premium price and market it alongside the existing maize-brewed product under a distinctive label, thereby offering the public a choice. Since sorghum is self-pollinating and since the distinctive red varieties are preferred by National Breweries to the traditionally grown white grain varieties, a price differential for the preferred types would be relatively easy to administer. USAID may wish to investigate the possibility of providing financing for National Breweries to upgrade their storage and brewing facilities and to encourage the GRZ to deregulate price controls on a sorghum-based premium brew.

258

Preserved Fruit and Vegetables

Rivonia Limited

Background

Rivonia has been in operation for six years. During that time, turnover has increased from K 5,000 per month to K 350,000 per month. It is a private company that presently employs 60 semi-skilled staff on 25 terminals. Products include tomato sauce, mango and tomato chutney, pickled onions, spiced chilies, spiced tomato sauce, and various preserves. Production is marketed directly to Lusaka supermarkets and food stores on a contract basis, and through NIEC and Mwaiseni to other urban centers.

Constraints

Processing is undertaken manually, and the company has been unable to obtain FEMAC approval to import equipment to semi-automate production and diversify into additional lines. Under the present system of manual pulping and bottling, hygiene is a problem and shelf life is considerably reduced.

Potential

Under the present production system, management cannot supply market demand. With the addition of automated pulpers/sievers, vegetable chopping equipment, bottle washers, vacuum cooking pots, and an automatic plastic bottle extrusion and filling machine, turnover would increase to approximately K 600,000 per month, and quality and hygiene would be assured. The total additional investment cost to streamline the plant is estimated at approximately US $35,000. In addition to rationalizing existing production technology to meet potential demand, management also wishes to establish a small canning plant to produce baked beans, spaghetti/beans, tomato puree, tomato soups, and grapefruit and orange segments. Since cans are produced in the Copperbelt the only requirement to diversify into canning would be a vacuum and sealing machine costing US $4-6,000. Anticipated gross turnover with this addition would increase to K 1 million per month.

It is understood that export potential also exists and enquiries have been received from Mozambique, Angola, Sweden, and Tanzania. Supplies of raw materials are not considered a problem, and deliveries are made by a few commercial farmers and marketeers on contract. Spices and preservatives, including sodium benzoate and sodium metabysulphate are imported in small quantities.

Soft Drink Industry

Background

The soft drink industry in Zambia is dominated by Zambia Bottlers, Copperbelt Bottling, Cadbury Schweppes, Sunquick, and Lyons Brook Bond. In an attempt to preserve foreign exchange and develop a locally based industry for the supply of raw materials, the government has recently banned imports

of concentrates. As an interim measure, the industry is being allowed to import artificial flavorings. Due to this constraint and the inability of the industry to import spares and equipment to maintain plants, the supply of soft drinks presently accounts for only 20 percent of the potential demand. Sunquick Lusaka is the only organization that has a suitable plant for crushing, extracting, and concentrating juice from raw materials. The present availability of raw materials to crush — oranges, grapefruits, and pineapples — is extremely limited and supplies less than 15 percent of the industry's capacity. For many fruits, the locations of the growing area and the crushing plant are inappropriate. For example, Copperbelt Bottling is presently processing grapefruits that are grown locally, transported to Lusaka for crushing and concentration by Sunquick, and then redirected to the Copperbelt for bottling.

Possible Intervention

Various alternatives are available depending on the expansion of crushing and concentration capabilities and the adequate supply of raw materials, particularly citrus (oranges, lemons, grapefruits, and tangerines). The industry is unlikely to invest in extraction plants and equipment, unless there is a parallel investment in the planting of fruit trees by both commercial operations and smallholders. At present, the demand for citrus in the smallholder sector exceeds the seedlings available from provincial MAWD nurseries. The economic viability of a joint private sector/institutional nucleus plantation based in a strategic locality and coupled to satellite smallholder production is well worth further investigation.

III. OTHER PROPOSED INTERVENTIONS

As mentioned in Chapters I and II, a number of additional interventions that warrant consideration within the ZAMS project were identified during the completion of the field work. For most of these options only a limited amount of information was gathered; however, for others such as groundnuts, a little more information is generally known because of the importance of the crop and previous field work carried out by Agmmark in identifying projects.

These interventions can be subdivided into the following categories:

- Crop related
- Input related
- Infrastructural support
- Financing

Crop-Related Interventions

The crops for which marketing interventions were identified are groundnuts, fruits and vegetables for the export market, barley for the clear beer industry, and beans, rice, and maize.

Groundnuts

Historical Overview

Zambia's officially marketed groundnut production peaked in 1967 at 14,800 tons. Total national production at this time was estimated to be about 24,000 tons. The Eastern Province's share of this market was approximately 75 percent.

By 1983, the officially marketed crop had declined to less than 1,000 tons with the Eastern Province continuing to produce more than 70 percent of the crop. Despite this decline in the officially marketed crop, it has been estimated that the total marketed crop remains around 9,000 [tons]; in other words, the vast majority passes through unofficial trading channels. A recent

report on the status of groundnuts in the Eastern Province[1] estimates that of a total 147,000 farming families, 73,500 grow groundnuts, producing a total of 20,000 tons of shelled nuts. Around half of this production is marketed, particularly to the Copperbelt through private traders, and the rest is consumed locally or retained for seed.

The main reason for the decline in the officially marketed crop has been the increasing imbalance between the price of maize and groundnuts. Farmers perceive that the labor requirement to produce one tonne of shelled groundnuts is three times that required to produce one tonne of maize. This 3:1 parity is borne out by an analysis of the historical price and market record. The highest years of groundnut production coincided with those in which the groundnut price was around three times that of maize and fell steadily from 1976 with an ever-increasing divergence from the perceived parity.

Until late 1985, when the price of groundnuts was decontrolled, the Eastern Province Co-operative Union was responsible for all official groundnut purchases and exports. Groundnut exports declined from a high of around 4,000 tons in the early 1970s to zero from 1981 onwards.

Varieties

The variety Chalimbana traditionally commanded high export prices; to protect this specialist market, the government for many years discouraged the introduction of other varieties in the Eastern Province. This policy was discontinued in 1975. However, despite the introduction of higher yielding varieties since 1975, including the locally developed Makulu Red which has twice the yield capability, the strong local taste preference for Chalimbana and the demise of the export trade has ensured the continuing dominance of Chalimbana in the Province.

As the Zambian and Malawian trade in Chalimbana nuts declined, European processors were forced to look elsewhere for suppliers. The United States filled the gap chiefly with its 'flo runner' type of nut, which has now become the confectionery industry's standard and for which processing plants have been re-equipped. Recently the industry has become nervous about its reliance on a single source of supply and has been investigating the possibility of re-establishing its old links with Central Africa. While Zimbabwean plant breeding has kept abreast of the changes in the requirements of the processing industry, Zambia and Malawi have continued to rely on the old Chalimbana type mainly to satisfy their domestic markets. Chalimbana nuts no longer command their old premium in the international market. In fact, they are discounted by some US $100 per ton against the market standard, making their export a far less profitable business, particularly where transport costs to the coast are high, as they are in Zambia.

---

1. *Groundnut Production and Marketing in Eastern Province: A Market Analysis.* Planning Division, Ministry of Agriculture and Water Development, Lusaka, Zambia, December 1983.

262

Possible Intervention

A project could aim to re-establish Zambia's role as an exporter of confectionery groundnuts by encouraging the traditional smallholder growers to produce a variety that is acceptable to the confectionery groundnut trade. The incentive for growers to switch varieties would be the premium farm-gate prices paid under the project. A company would be incorporated, which would own and operate handling and grading equipment capable of an annual throughput of 6,000 tons of shelled nuts. The company would sub-contract the buying process to an existing marketing institution or private traders, and would process nuts at its plant and export the higher quality nuts, while disposing of those that do not make export grade on the local market.

Project Objectives

The objectives of the company would be achieved by the implementation of six main components:

1. Incentive prices for smallholders
2. Improved seed supply
3. Input distribution
4. Buying service
5. Processing
6. Marketing (export and local)

Incentive Prices for Smallholders. The incentive for up to 8,000 smallholders to adopt a new variety will be the premium price paid under the project for groundnuts that are acceptable to the export confectionery market. In addition, under the proposed buying structure, payment would be made to the farmers for their crop within 14 days, thus avoiding the long delays currently experienced. These indicators are considered to be adequate incentives to achieve the conservative projections for the replacement of traditional varieties with the new variety as it becomes available.

Improved Seed Supply. The most important initial constraint on the project is the unavailability of commercial stocks of the right variety of seed. Although Argentina and the United States could be the source of new varieties to replace Chalimbana, the adaptation of those varieties to Zambian conditions is unknown and would take time to test. At least two recent Zimbabwean releases, which have a proven record in this region, and which are included in the current Zambian research program, are known to conform with the market requirements and, subject to the normal controls, could be bulked up immediately. These varieties are Flamingo and Swallow, with a strong preference for the former.

In order to bulk up the right variety for commercial production in Zambia, there are two options. The first is to establish a seed multiplication facility (possibly at Msekere in the Eastern Province, which is the current Zambian groundnut research station) with the assistance of Zamseed and in close collaboration with the intended market. The second option is to provide foundation seed and supervision and sub-contract the bulking process to

reputable and well-established commercial growers in the Eastern Province, again in close collaboration with the intended market.

Assuming the rate of build-up of a new variety passing from foundation seed through the bulking process to smallholder production commences with a 20-kilogram sample planted in the summer of Year 0 and again under irrigation in the winter of Year 0, a smallholder commercial production of around 2,000 tons would be achieved by Year 2, rising to 6,000 tons by Year 4. The number of hectares that must be committed to bulking in the first few years of the project are summarized below:

Required Hectares for Bulking

Year 1	Year 2	Year 3	Years 4-10
71	86	167	42

Input Distribution. In the early stages of the project the only input planned would be improved seed. There would be a 20 percent per annum replacement after the initial build-up. An exchange scheme, channeled through the buying agents (see below) would be contacted for this purpose. Additional inputs such as gypsum and spray chemicals, particularly synthetic pyrethroids, would gradually be introduced as seed uptake was established.

Buying Service. An established marketing agency such as LINTCO would be contracted by the company to act as buying agents, through which the cotton buyers already posted throughout the region could be utilized. LINTCO is obliged to post buyers wherever cotton is grown. In the plateau areas, where cotton is grown less than groundnuts, these buyers are often underutilized; therefore, a project of this nature would allow LINTCO to make better use of buyers and buying capacity. In the past, one of the main causes of the decline in officially purchased groundnuts has been a lack of cash at buying points. LINTCO has a high reputation among growers for rapid and assured payment (in the cotton markets), with delays seldom exceeding two weeks.

The current ECU pricing structure favors purchases of nuts in shell. This approach would be reversed by the project's pricing structure to favor shelled nuts. This process would have both benefits and costs.

Benefits include

- Reduced transport costs
- Reduced losses (or higher percentage for exports)
- Easier quality determination at purchase
- No shelling costs

Costs include

- Quality losses through breakage by handling before and after grading
- Poorer storage characteristics

There would be a two-grade price structure, which would have the effect of encouraging the sale of high grade nuts and keeping lower quality nuts for home consumption and the domestic market.

Processing. The ECU has shelling and grading equipment situated in Chipata, Petauke, and Sinda. The equipment in Petauke and Sinda is obsolete and has been cannibalized beyond recovery, and the equipment at Chipata is not available for hire; therefore, it will be necessary to purchase all equipment required for handling and grading 6,000 tons of shelled nuts during a five-month operating period. In addition, support equipment such as conveyors and bagging plant and vehicles will be required.

The exact location for the processing plant would be decided during a feasibility study. A site on the Chipata to Lusaka road (as far west as the requisite facilities and housing can be found and yet not so far as to be outside the 'center of gravity' of production) such as Petauke or Sinda, would be the most logical choice.

Marketing. It is assumed that export quality nuts would amount to 63 percent of throughput (after deducting losses) for the traditional Chalimbana nuts, rising to 67 percent for the improved variety. The remainder would be sold onto the local market. Export nuts would be consigned by container via Dar es Salaam to UK ports. In order to minimize interest charges resulting from delays in payment, an insurance scheme that guarantees payment once the crop is ready for dispatch could be negotiated.

Project Costs

It is anticipated that up to 8,000 smallholders would benefit from increased prices under the project. Total project costs have been estimated in the region of US $750,000. Total project benefits would be around US $4 million per annum at full development with foreign exchange earnings in excess of US $3 million.

Fruits and Vegetables for the Export Market

Agroclimatic Conditions

Agroclimatic conditions in Zambia are favorable for the production of fresh fruits, flowers, and vegetables for exports both regionally and to Europe during the high-price 'off season' period from October to May. Areas surrounding Lusaka are particularly advantageous, since they have abundant shallow groundwater reserves, good soils, and a suitable micro-relief for

265

surface and overhead irrigation. However, relatively high humidity and rainfall between December and February offset some of these advantages for specific crops that are susceptible to fungus and insect attack. Regular applications of systemic pesticides, and appropriate planting schedules and crop hygiene measures are essential for ensuring the production of high quality produce during these months.

Since the early 1970s, both private and public sector enterprises have exploited this potential and exported produce to Northern Europe and to adjacent regional markets including Botswana, Zaire, Gabon, The Congo, and Angola. Items exported to date include strawberries, bobby beans, fine beans, okra, ginger, melons, sweet corn, mange-toute, chilies, aubergines, courgettes, and gladioli to Europe; and citrus, onions. potatoes, cabbages, tomatoes, peppers, and bush beans to regional markets.

Past Experience

Private Sector Exports to Northern Europe

Within the private sector, exports to Northern Europe are dominated by about five well-established commercial farming enterprises, which have diversified into horticultural exports over the past few years as a means of securing the 50 percent foreign exchange retention incentive applicable to non-traditional export earnings. The retention, in turn, is used mainly to secure essential imports required to sustain traditional non-export farming activities. Despite this ulterior motive, producers are becoming increasingly aware that horticultural exports provide an attractive financial return in their own right. In the 1986/87 season, Walkover Estates, Galaunia Farms Ltd, Mpongwe Investments Ltd, Curray Farms Ltd, and York Farms accounted for more than 75 percent of total exports destined for Europe. Production, processing, and marketing activities in this subsector are characterized by individualistic efforts with negligible cooperation between the various producers. Exporters have operated to a large extent in isolation, having identified their own market contacts, developed their own production technology, and invested independently in processing and cold chain facilities. In the past they have also competed for subsidized air freight capacity offered on Zambian Airways scheduled flights. Marketing standards achieved have reached a relatively high level; however, the lack of cold storage facilities at Lusaka airport continues to have an adverse impact on the quality of produce. In summary, the subsector is narrowly based, and the withdrawal of one or two producers could reduce present export volumes by as much as 50 percent.

Private Sector Exports to the Region

Regional exports of fresh horticultural products within the private sector are dominated by a single trading company based in Lusaka. Whitby Enterprises Ltd combines exports with fruits and vegetables on regularly chartered air freighters to Congo Brazzaville, Gabon, and Angola. In contrast to the production-oriented subsector described above, Whitby operates as an intermediary, relying on small-scale outgrowers for supplies of produce. They have had considerable difficulty in achieving the quality and packaging

266

standards desired, despite the lower requirements prevailing in these markets. Attempts to draw up meaningful production contracts with suppliers have failed, primarily because of a lack of both reliability and understanding among smallholders of the importance of quality. The company therefore intends to concentrate on producing its own exports in the future, and has invested in land and irrigation equipment for this purpose. A number of large scale commercial farmers also export potatoes, onions, and citrus to Zaire on a sporadic basis, but these efforts are opportunistic and are pursued when local markets in Zambia are oversupplied.

Public Sector Exports

In 1974, NAMBoard and the National Import-Export Corporation Ltd exported a few consignments of mangoes, melons, and capsicums to the United Kingdom. In order to promote these efforts, the government initiated an export development program for fresh horticultural produce supported through a parastatal body, Zambia Horticultural Products Ltd (ZAMHORT), established in 1978 with a capital of K 1 million. Its objectives were to

- Establish depots in all provincial centers for purchasing and wholesaling fruits and vegetables throughout the country
- Stimulate and develop an efficient export trade
- Develop a commercial processing industry

ZAMHORT was equipped with a modern packing house and cold storage facility in Lusaka, and between 1978 and 1980, the company exported small quantities of items to Europe, including capsicums, french beans, chilies, melons, okra, and aubergines purchased from a number of smallholder producers and cooperative groups around Lusaka.

From its inception, ZAMHORT experienced considerable difficulties in attaining European quality standards and developed a poor reputation as a fresh produce exporter. This stigma resulted from the recruitment of inexperienced growers, inadequate on-farm supervision, irregular supplies of packaging materials, inappropriate grading and quality control measures, and inadequate management controls. By 1980, the Board of Directors, faced with accumulated losses of K 0.75 million, temporarily discontinued further exports, and ZAMHORT was transferred to the National Import-Export Corporation Ltd. Its regional marketing activities were stopped, and its operations continued processing horticultural produce and organizing export sales of small quantities of fruits, vegetables, and preserved products.

Export Volumes

Reliable statistical data on exports of horticultural produce and flowers are limited. During 1979/80, 1980/81, and 1981/82, ZAMHORT exported 63, 68, and 94 tons of vegetables, respectively. The major independent exporter during this period was Walkover Estates, which exported between 200 and 250 tons of produce each year. Data collated by the Central Statistics Office for 1984 indicate a gross export volume of 700 tons of produce valued at

approximately US $0.9 million (CIF). During the 1986/87 season, recorded export volumes up to April 30, 1987 increased to approximately 550 tons to Europe and 650 tons regionally, with a total CIF value of about US $1.5 million. Although the expansion of export production by individual producers since 1984 is significant, overall export volumes are modest compared with those of regional competitors, particularly Kenya, which exported more than 20,000 tons of horticultural produce during the 1985/86 season.

Government Policy

The government has actively encouraged the horticultural export industry since the mid-1970s, with the temporary participation of NAMBoard and the National Import-Export Corporation (NIEC) in export promotion and sales in 1974, the establishment of ZAMHORT in 1978, and the introduction of foreign exchange retention incentives in 1985.

The government's objective in directing ZAMHORT to act as a purchasing, processing, and export intermediary was to link smallholder producers to potentially lucrative European and regional marketing outlets. This initiative has largely been unsuccessful because of fundamental misconceptions of the capability of inexperienced smallholders to achieve adequate quality standards, the high quality requirements of the export market, and the ability of ZAMHORT to intervene effectively in purchasing, quality control, and marketing activities for highly perishable products. While ZAMHORT continues to operate residually as an exporter, there is a growing realization within government that a rapid expansion of horticultural exports will depend largely on private sector initiatives as undertaken in Kenya and Zimbabwe. The establishment of the Export Board of Zambia, a statutory body set up in 1986 with support from the I.T.C. and the Irish government to promote private sector agricultural and industrial exports, appears to be a move in this direction.

Existing Institutional Arrangements

Zambia Export Growers Association (ZEGA)

In 1984, a group of prominent commercial farmers established ZEGA to act as an agent on behalf of commercial and emergent growers interested in exporting traditional agricultural and exotic crops. It was proposed that the Association would identify potential markets, consolidate export orders, process documentation, exert quality control measures, rationalize input procurement, and negotiate with government and air freight authorities on behalf of its members. Since its inception, the Commercial Farmers Bureau has assisted ZEGA, from time to time, with short-term loans to finance office and other operating expenditures. A voluntary committee directs its activities. By 1987, ZEGA had 95 members, each contributing a nominal annual membership fee of K 100.

Since exports of dryland crops, particularly maize, soya, and wheat, are restricted by government regulations and the PL480 food aid agreement with USAID, early efforts by the Association were directed solely towards coordinating horticultural exports. Although the establishment of ZEGA has

been a move in the right direction, it has failed to live up to expectations because of a number of constraints. ZEGA has no permanent premises and no operating funds other than those generated by membership subscriptions and a nominal levy on the sale of seed and packing cartons. Day-to-day activities undertaken on its behalf by the Midland Farmers Co-operative Society are confined to input supply, secretarial and accounting services, and negotiations with Zambian Airways on general matters relating to air freight.

Initially, export consignments from a few members were dispatched under the ZEGA label; however, because of inadequate quality control by ZEGA, quality variations between exporters using the label were considerable. Therefore, members have tended to avoid this avenue, and it is significant that the most active members of the Association are established exporters who least require the services of ZEGA to develop their operations. The less experienced commercial and emergent producers, who represent the majority of members, have failed to play a significant role in the activities of the Association. In essence, ZEGA is presently a dormant organization without a clear definition of its proposed role and without adequate financial support and managerial depth to implement the services necessary to expand export production.

ZAMHORT

Despite a retrenchment in 1980 of its staff complement, from 250 to 50 employees, and a reduction of its activities as described above, ZAMHORT continues to operate on a subsidized basis. It reported an operating loss of K 21,500 on a turnover of K 2.5 million in 1985, and had accumulated losses of up to K 4.5 million by 1986. Recent financial problems and difficulties in exporting are the result of the absence of technical facilities for processing, including juice extraction, concentration, and freezing equipment. Clearly, in its present form as a subsidized, inefficient organization, ZAMHORT is an inappropriate vehicle for the expansion of horticultural exports.

Horticultural Research and Extension Services

Research. The National Irrigation Research Substation located in Southern Province is responsible for vegetable and pasture research. Since 1978, the substation has carried out screening trials on amaranthus, beans, cabbage, carrots, kale, rape, pumpkins, watermelons, musk melons, tomatoes, onions, okra, and chilies. It has also been involved in seed production of these items in addition to testing various herbicides, insecticides, and fungicides; however, there is no link between the horticultural export subsector and the substation, since its activities are directed towards technical support for producers selling to the local market.

Extension. Horticultural extension is provided to smallholder and emergent growers through Provincial Horticultural Officers and District Horticultural Assistants seconded to the Provincial Agricultural Office in each region. Technical direction emanates from the Horticultural Department of the Ministry of Agriculture and Water Development (MAWD) in Mulungushi House

in Lusaka. The Department is neither designed nor has the necessary expertise to provide meaningful assistance to the export sector.

Issues and Constraints

Production

A high level of technical expertise and knowledge is required in the production of export quality flowers, and fresh fruits and vegetables. A review of the present endeavors of the subsector indicates that a handful of commercial producers are approaching required quality standards and have developed a satisfactory reputation with importers. However, in the absence of technical support this has involved a considerable investment in market research and on-farm experimentation relating to appropriate cultural practices, varietal screening, pest control measures, and grading and packing techniques.

As a result, experience gained by these companies in terms of marketing and production technology remains a closely guarded secret, and there is little evidence that the sector as a whole is generating a knowledge base that could be tapped by companies or individuals wishing to enter the business at a later stage. Although this is understandable in the prevailing circumstances, the general lack of access to up-to-date technology by most potential producers remains a severe constraint on the expansion of the subsector. Many potential producers do not have the time or financial resources to undertake experiments and absorb the losses that the larger companies incurred in the learning process. In addition to technical constraints, producers require access to medium- and long-term credit to invest in the installation of boreholes and in the purchase of irrigation and other equipment.

Processing

Field heat extraction and cool chain facilities are an essential prerequisite to successful export marketing of fresh horticultural produce. No emergent export industry is likely to achieve sustained development without considerable investment in these facilities, and it is significant that those exporters who have successfully penetrated the export market without exception have invested in cool chain plant and equipment. Specific on-farm requirements will depend upon the range of commodities grown, but will include a packing and handling shed, a field heat extraction unit, a cold store, and an insulated truck for those growers living in areas distant from the airport. Commercial and emergent farmers wishing to participate in the export subsector will also require medium- and long-term credit facilities to invest in these facilities and equipment.

Marketing

Airport Facilities. The lack of airport handling and cold storage facilities poses a severe problem for the expansion of horticultural exports. Documentation procedures at Lusaka airport require that consignments be delivered and offloaded at least five hours before departure, during which time deterioration of produce invariably occurs.

210

Two clearing agents with warehouses at the airport have small cold stores: Manica Ltd, with a cold room of 5m x 5m; and AMI Ltd, with a 40-foot reefer container parked outside the company's warehouse. The former is unsuited to handling pallet loads, and the latter, by virtue of its shape, is inefficient in terms of net storage space. For practical purposes, the combined storage capacity of these facilities is no more than 15-16 tons, taking into account requirements for incoming perishables. Daily consignments during the peak export period already exceed this volume, and exporters complain about the deterioration of their product and the occasional need to return consignments to their farms when airline departures are delayed or cancelled.

Before the industry can expand significantly, adequate handling and cold storage facilities are essential. These facilities should include a handling bay, a forklift, palleting equipment, and a segregated cold store with a minimum of three cold rooms held at 2 degrees C, 5 degrees C, and 12 degrees C. Discussions with the Civil Aviation Authority indicate that although several companies inquired about leasing plots in the Phase II freight village area, no investments are foreseen in the near future. Leases issued by the Civil Aviation Authority are only valid for 14 years. This period of tenure is inadequate in relation to the level of investment necessary in the construction of cold storage facilities.

Air Freight Capacity and Costs. The availability of air freight space and its cost is one of the most crucial elements in assessing export potential for perishable crops. At present, all fresh fruits, flowers, and vegetables are exported on scheduled passenger aircraft. The existing situation is outlined in the table below:

Airfreight Capacity from Lusaka to Europe

Carrier	Aircraft	Weekly net capacity[a] tons	Net flights	Weekly capacity tons
Zambia Airways	DC-10	6-8	3	18-24
UTA	747COMBI	14-18	1	14-18
B/CAL	DC-10	5-6	2	10-12
Total weekly capacity				42-54

a. Net capacity allows for passenger baggage requirements and freight allocations for source and en-route destinations.

Assuming an 18-week delivery period, existing Europe-bound capacity exceeded export volumes in 1986/87 by about 400 tons or 60 percent.

However, because of a substantial differential between subsidized Zambian airfreight charges of US $1/kg and charges by foreign carriers of K 5.20/kg ($1 = ZK 8), producers competed exclusively for Zambian Airways capacity, only using alternative services when forced to do so. For the forthcoming season, Zambian Airways intends to charge competitive rates for air cargo and bring their prices into line with other carriers. The situation is likely to be as follows:

Airfreight Charges to Northern Europe

Carrier	Destination	Item	Charges per kilogram (U.S. dollars)
Zambia Airways	London	Vegetables/fruit	0.65
	London	Flowers	0.90
UTA	Paris	Vegetables/fruit	0.59
	Paris	Flowers	1.05
B/CAL	London	Vegetables/fruit	0.62
	London	Flowers	1.05

Producers have complained about the proposed removal of Zambian Airways subsidies; however, in the long run, this move is seen as a positive development, as it will discourage the production of lower value items that cannot absorb economic airfreight costs. It will also force the industry to become more quality conscious, and to look for 'value-added' options. In general, these costs are in line with those paid by Zimbabwe and Kenya, where rates per kg are US $0.57-0.68 for vegetables and US $0.85-0.91 for flowers. In addition to scheduled flights, Zambian Airways operates two Boeing 707 freighters through its subsidiary, National Air Charters. These aircraft haul dry cargo from Europe at a charge of about £1.30/kg. Northbound, the freighters are routed once a week via Luanda and Nairobi, and once a week via Brazzaville and Nairobi. During recent negotiations with ZEGA, Zambia Airways indicated its willingness to allocate one 707 freighter during the export season to carry horticultural produce on consignment to London at US $0.65/kg at a conversion of K 8 = $1.00. The existing dry cargo charter rate to London is US $45,000 for a maximum load of 39 tons; however, it is not yet clear how National Air Charters will allocate capacity to fruit and vegetable exports to Europe without affecting existing contracts to carry beef and vegetables to regional markets (Luanda and Brazzaville).

Thus, discounting unforeseen re-routing by existing carriers, available capacity will be 74-88 tons per week or approximately 1,300 tons for the 1987/88 season. Skepticism remains as to whether the industry will be sufficiently organized to utilize fully this capacity, considering the lack of a co-operative approach to marketing. Although adequate at present, capacity remains extremely modest compared with that available to competitors, and

272

future expansion will be inhibited unless Zambian Airways abolishes present licensing restrictions on competitive airfreight carriers.

Marketing Strategy

The individual approach to export production and marketing that presently characterizes the industry does not favor accelerated or sustained growth. The Kenyan experience clearly indicates that the active participation of emergent and small-scale producers in the production of exportable horticultural crops requires the development of a group approach to quality control and marketing. This could be accomplished either through a revitalized association of growers, or through entrepreneurial ventures that concentrate on processing and marketing rather than production. While any proposed intervention must support such initiatives, it is vital that the industry itself adopt a more positive attitude to this requirement.

Market Potential

Fresh Fruits and Vegetables

Various studies commissioned by the Zambian government, including the 1984 Hendrikson Associerte GmbH report financed by the EEC, and the 1986 Produce Studies report financed by the Commonwealth Fund for Technical Cooperation, conclude that a substantial market exists for selected high value fruits, vegetables, and flowers, assuming that the industry can achieve the quality standards required by the trade. Over the past decade, a significant change in fresh produce marketing has taken place in Northern Europe -- particularly in West Germany, the Netherlands, and the United Kingdom -- with the aggressive entry of supermarket chains into retailing. In the United Kingdom, supermarkets now control more than 60 percent of the retail business, and they demand from their suppliers (packing and distribution companies such as Geest, Macks', and Hunter Sapphire) exacting standards for quality, continuity of supply, and presentation. Since their entry into the market place, they have taken advantage of changing health attitudes, a more widely traveled public, and the presence of large ethnic minorities to both increase consumption and broaden the range of items on sale. The packing organizations, in turn, have invested heavily in cool chain storage and distribution facilities and are continually looking for alternative sources to rationalize year-round supply and maintain quality standards.

An examination of import volumes of exotic fruits and vegetables into Northern Europe is of limited value in determining market potential; however, as presented in the table below, they give an indication of the huge size of the market in relation to Zambia's present output.

273

Imports of Selected Fresh Fruit and Vegetables
(tons)

Commodity	United Kingdom 1984	United Kingdom 1985	Netherlands 1984	Netherlands 1985	W. Germany 1984	W. Germany 1985
Asparagus	865	897	134	283	18,758	20,619
Aubergines	814	6,629	2,924	3,121	11,302	12,053
French beans	3,442	4,570	13,072	15,006	7,945	10,009
Courgettes	8,668	11,645	900	1204	7,335	8,614
Mange-toute	1,500	1,800	304	N/A	N/A	N/A
Mangoes	5,178	6,468	2,033	2,515	1,511	1,746
Sweet melons	73,700	75,400	27,000	22,000	18,500	23,500

Marketing costs including airfreight, insurance, packaging, and offshore commissions account for more than 75 percent of total production, processing, and marketing costs, and for most fruits and vegetables amount to US $1.00-1.15/kg. It is realistic to assume that only products with a wholesale value of US $1.50/kg or more, during the off-season period between November and April, are likely to be attractive. The products with such price potential are identified as follows:

Market Opportunities
(1986/87 UK Wholesale Prices November/April)

Produce with good potential	Price/kg (Sterling)	Produce with moderate potential	Price/kg (Sterling)
Asparagus[a]	2.00-5.00	Aubergines	0.70-1.00
Fine beans	0.90-2.20	Courgettes	0.80-1.30
Mange-toute[b]	1.10-2.00	Okra[b]	0.90-1.50
Sweet corn	1.20-1.40	Avocados	0.80-1.10
Mangoes	1.20-3.30	Paw-paw[b]	1.00-1.75
Peaches/nectarines[c]	1.50-2.00	Passion fruit	1.40-1.70
Strawberries	2.50-4.50		
Cantaloupe	1.00-1.50		
Cayenne chilies	1.00-1.40		

a. EEC duty September-January, 9.6 percent; February-August, 16 percent.
b. Small markets.
c. EEC duty is 22 percent.

274

In addition to these items, many other tropical fruits are imported to Northern Europe. The wholesale prices of Cape gooseberries, guavas, lychees, persimmons, and tamarillos consistently exceed US $1.50/kg and often return prices in excess of US $2.00/kg.; however, these markets are small and are sensitive to oversupply and price collapse.

The potential of regional markets is more difficult to assess. Eighty percent of produce exported by Whitby Enterprises Ltd in 1986/87 went to Angola, where shortages relate to a large extent to the current political situation. Gabon, with a population of about 750,000, a well-developed mining, petro-chemical and timber industry, a high standard of living, and a large expatriate community is a natural target for Zambian exports. At present, fruits and vegetables are imported from France at high cost. Good market potential exists in Congo Brazzaville, although to a lesser extent than in Gabon. Both countries import consignments of beef from Zambia; thus, combined beef/fruits/vegetables exports would be possible. Improvements in the quality standards for fruits and vegetables would be necessary if Zambian producers wish to capture a significant share of these markets.

Flowers

The European market for flowers includes an enormous number of different varieties. Marketing procedures are highly sophisticated, particularly in the Netherlands, where the Dutch auction floors operate a redistribution network that covers most of Europe, and represents 83 percent of the European import market.

The immediate potential for Zambia appears to be for gladioli, roses, and carnations, since they are imported in large quantities in the European winter and offer prices high enough to be attractive. Mpongwe Investments Ltd successfully exported 7,900 boxes (250 stems each) of gladioli to the United Kingdom in 1986/87 at prices ranging between US $0.15 and US $0.39 per stem, from an area of 17 hectares. Summer annuals exported to the Netherlands in the winter season are also an attractive alternative, and an established commercial farmer in the Lusaka area is investing in a joint venture with an international organization to export 8 million stems annually, based on successful experience gained in Zimbabwe. In general, the world demand for cut flowers has been increasing steadily by 5-10 percent per year over the past decade, while demand for the summer flower varieties has increased faster than twice that rate.

Gladioli, rose, and carnation imports to the United Kingdom, West Germany, and the Netherlands amounted to 2,523 tons in 1984. Average prices for quality stems were as follows:

Item	US $/100 stems	Market
Gladioli (standard)	27.0	West Germany
Roses (large flowers)	31.0	Netherlands
Carnations (standard)	17.0	Netherlands

In summary, the market for high value fruits, vegetables, and flowers is attractive for Zambia. Constraints relate mainly to producers' access to relevant technical information and to their ability to attain appropriate quality standards, rather than to the market situati: . Regarding price competition, Zambia has lower labor costs than other regional competitors, an important advantage in view of the large labor requirement for horticulture.

Possible Project Interventions by USAID to Support the Expansion of the Horticultural Export Industry

In April 1987, a World Bank Mission completed a preparation report for an export diversification project for Zambia. Included in this study were tobacco, groundnuts, cotton, beef, and fruit and vegetables. The concept of the project was for the Bank to provide foreign exchange, through the commercial banks, for the provision of short- and medium-term loans that producers could use to procure equipment and inputs. These loans would be recovered, through the commercial banks, from the export retentions.

As a result of Zambia's break with the IMF and the introduction of the Interim Economic Development Plan, the World Bank will not be implementing this project in the time scale originally planned. However in April 1988, the Bank of Zambia gave approval for up to US $12 million worth of pipeline debt to be dismantled in order to provide kwacha support for a horticultural export project. Under this approval the funds can be used for development work such as land clearing, on-farm buildings, and working capital for farmers wishing to expand their current production or for incremental producers wishing to enter the export market. In addition, the funds could be used for the local portion of the construction of improved marketing facilities at Lusaka International Airport, such as cold storage facilities.

These funds will be administered through a commercial company, in conjunction with commercial banks. The company will provide technical and marketing information and supervision and will carry out feasibility studies on behalf of potential clients in order to assess the viability of their proposed production, while the commercial banks will administer the financial aspects as envisioned in the World Bank project.

In addition to local funds, medium- and short-term foreign exchange loans and equity will be required to implement the project. The medium-term loans would be used for the procurement of machinery and equipment, while the short-term loans would be 'pump-priming' foreign exchange, in the initial phase, for the importation of improved seeds, chemicals, and packaging materials. In addition, longer-term loans or equity would be required for the development of the cold storage facilities at the airport.

Airport Facilities

As detailed earlier, airport facilities for pre-shipment, storage, and handling are presently inadequate. Credit could be provided under the ZAMS project to an association, company, or individual wishing to invest in appropriate handling and cold storage facilities at the airport. Plots 65 and 66 in the Phase II freight village are available for this purpose, where Manica Ltd has already invested in some infrastructure including tarmac access roads, power facilities, and drainage. Under the project financing, up to 75 percent of the capital costs through medium- or long-term loans could be considered.

Applicants wishing to invest in the village would be required to submit proposals to the Civil Aviation Authority (CAA) together with architectural drawings, which thereafter would require approval by the CAA's Buildings Department. A 14-year renegotiable lease would cost a one-time fee of K 28,000 payable to the Commissioner of Lands, who would pass it on to Manica Ltd. To stimulate interest in establishing suitable airport facilities, the government must increase the initial lease period to at least 20 years.

The appropriate size of the cold storage facility at the airport would depend upon the rate at which export volumes are expected to increase; however, design provisions could easily be made for the expansion of capacity alongside increasing export volumes. Various systems are available including sophisticated Ice Bank and Humi cold stores. In view of the high maintenance requirements of these units, a conventional forced air system with or without humidity control would seem more appropriate. Peak daily export volumes are currently about 15 tons; therefore, a unit with a total initial storage capacity of 50 tons would be more than adequate to cover a threefold increase over the next two to three years. Specifications and typical costs of such a unit are detailed in the following table.

The justification for this facility is that exporters are not getting top prices for their produce, in part because of the decline in quality at the airport when the cool chain is broken. Increases in prices of at least 10-12 percent for produce passing through the facility would be realistic and would be worth an additional US $150,000 per annum to producers. Annual income to the investor assuming a charge of K 0.30/kg for each consignment would amount to about K 450,000.

Specifications for Cold Storage Facilities at Airport

4 coldrooms:	8m x 8m x 3m
Passage area:	16m x 4m x 3m
Loading bay:	20m x 4m

	Costs (kwacha)
Coldroom equipment and doors	480,000
Insulation of cold rooms	144,000
Electric panels for coldrooms, lighting, etc.	36,000
Building works (concrete block plinth, asbestos roof fixed on spider trusses) including contractor's margin	1,000,000
ZESCO supply and connection fees	40,000
Main electrical panel	12,000
Cold store specialists margin -- fees for installation	80,000
Forklift truck	160,000
Total	1,952,000

Barley Production for the Clear Beer Industry

Background

Zambia Breweries currently brews beer at two sites (Copperbelt and Lusaka) and a total of 800,000 HL is produced. This amount is significantly below demand and shortages are frequent. Lack of foreign exchange to import the malted barley is currently the greatest constraint to meeting demand.

To meet current production levels, some 7,500 to 10,000 tons of malted barley are imported annually at a cost of about US $3.8 million. INDECO, a government parastatal and owner of Zambia Breweries, is anxious to substitute locally produced malt for imported malt.

The basic ratio of raw materials by weight used in brewing clear beer are as follows:

Malted barley	50 percent (imported)	7,500-10,000[tons]pa
Maize grits	25 percent (local)	3,750- 4,250[tons]pa
Sugar	25 percent (imported)	3,500- 4,000[tons]pa

Although malted sorghum is successfully used as a basic ingredient for brewing in both South America and West Africa it is not favored by Zambia Breweries because the installation of special bulking facilities would be required. Zambia Breweries favors the total replacement of maize grits by rolled barley from a quality standpoint; however, this is unlikely to be economically viable unless the maize subsidy is removed or unless Zambia Breweries is forced to pay the full commercial price for maize.

Barley has been grown on a very small scale in Zambia since the early 1960s, mainly on irrigated commercial farms for feed purposes. Government-controlled prices and lack of a comprehensive policy towards import substitution have restricted, until now, production to minimal levels. Barley yields in Zambia have traditionally been rather low (2 to 3 tons/ha), because of the poor performance of unimproved varieties; however, in neighboring Zimbabwe, where a policy of import substitution has been in force for a considerable time, improved varieties and technology have raised yields to between 5 and 6 tons/ha, and where malting barley is grown alongside wheat, yields have been very similar. Improved varieties of wheat in Zambia are currently yielding around 6 tons/ha under irrigation.

Barley can easily be substituted for wheat in the well-proven wheat/soyabean rotation practiced for many years in Zambia and Zimbabwe. However, the government would be concerned if barley production replaced wheat production on any significant scale among traditional commercial farmers. A great effort has been made recently to meet the country's demand from local sources. Thus, any incremental barley production should come, ideally, from dedicated incremental irrigation projects. This condition can be met by restricting barley to areas with slightly lighter soils, in order to control nitrogen levels better, which is not possible on the rich, heavy red soils traditionally selected for wheat production.

Possible Intervention

Some large tracts of land in areas agro-ecologically suited to barley production have been set aside by the government for large-scale commercial development. One of the main areas of government priority for this type of development is in the Mpongwe block, where there are already a number of similar development projects, and where soils/irrigation potential is suited for barley production.

Any such project would rotate irrigated barley with rainfed soyabeans and would, initially, send the barley to Zimbabwe for malting, although a malting capability could be established once production warranted it.

Project Costs and Benefits

Development costs indicative for a 5,000-hectare project are given in the following table.

Component	Cost per hectare	Total cost
Land clearing	1,200	6,000,000
Agricultural machinery	200	1,000,000
Storage/housing/roads	250	1,250,000
Irrigation and pumping	750	3,750,000
Electrical reticulation	100	500,000
Working capital	200	1,000,000
Contingency	200	1,000,000
Sub total		14,500,000
Malting plant and installation		3,500,000
Total		18,000,000

At full production, such a project conservatively would produce 20,000 tons of barley per annum, of which approximately 15,000 tons would be used for local clear beer production; the balance would be exported regionally. The most likely markets would be Tanzania, Zaire, and Malawi. In addition, 50 percent of the soyabean production, totaling 7,500 tons, would be exported. The gross value of production would amount to approximately US $10.0 million per annum. The total value of the exported production would be approximately US $4.0 million annually.

Financing

In Zambia, this type of project would be eligible for debt/equity swapping or discounting using trade creditor debt held in the pipeline. Through this mechanism, the amount of incremental foreign exchange required is minimized, although any such investment is denominated as foreign and is eligible for externalization of dividends in foreign exchange payable from the retention granted by the government on the export earnings.

In addition, foreign exchange loans would be required for the purchase of machinery and equipment as well as for irrigation infrastructure. Any such loan could be serviced through the same retention.

Beans

Beans form a significant part of the diet of most Zambians, but they are not traded in any substantial quantity through the formal market. The follwing table gives an indication of the estimated area under production and tonnage produced, by province, for the period 1976 to 1986.

Mixed Beans
Area under Production and Tonnage Produced

	1981/82	1982/83	1983/84	1984/85	1985/86
Area (hectares)	14,350	17,650	7,550	8,346	13,665
Tons	4,209	6,025	5,405	5,550	6,024
Yield/hectare (kilograms)	293	341	716	665	441

The high production of the Northern Province probably reflects the lack of animal proteins in that region, and it is unlikely that the northern provinces would be suited to the cash crop production of beans. More likely, the Eastern Province would respond best to incentive pricing.

The beans grown in Zambia, known as 'sugar beans,' 'ration beans' or 'mixed beans' are imported into Swaziland, Botswana, and South Africa; much of the supply is currently grown in Zimbabwe. In Botswana and South Africa these beans are used in the mine rations. There appears to be a potential to export these beans in the regional market, using mechanisms similar to those described for the groundnut project — small-scale outgrowers selling through a commercial company that would export the produce to the market. The incentives to grow beans would be a better price and prompt payment to the producers.

As is the case for all export crops, the overvalued kwacha mitigates against this type of project when the project has no access to any financing scheme that would bring the value of the kwacha more in line with its real value.

Rice

The main production areas for rice are the Northern Province and, to a lesser extent, the Eastern and Western Provinces; however, on a per capita basis, Luapula Province also produces significant amounts. Production figures and the area under cultivation for the period 1982 to 1986 are summarized in the following table.

Rice: Area under Production and Tonnage Produced

	1981/82	1982/83	1983/84	1984/85	1985/86
Area (hectares)	5,920	7,014	8,740	10,863	10,410
Tons	5,272	9,631	9,271	11,233	11,206

During the completion of the field work, a number of agencies reported the poor quality of Zambian milled rice compared with that of Malawi. Zambia currently imports rice from Malawi. This problem is simply one of mixed varieties in the planting material; mill settings cannot cope with varying grain sizes. During the 1960s, Malawi suffered a similar problem and entered into a large-scale seed purification scheme that has now resulted in a more uniform seed quality. Since there have been two schemes to support rice production in Zambia, the EEC in Kasama and the Dutch government in the Western Province, it is surprising that this problem still exists.

A possible intervention by USAID would be to investigate the extent of this problem and, if warranted, to implement a project to coordinate research between Malawi and Zambia, and to produce and distribute quality seed. It should be noted that the preferred Zambian variety is the Malawian indigenous Faa.

Alternatively, the seed could be imported directly from Malawi for retail sale in Zambia. In recent discussions between the Seed Company of Malawi (which is responsible for maintaining Faa purity) and Agmmark, the management indicated a strong desire to market their products into Zambia but were constrained by Zambia's lack of foreign exchange. The provision of foreign exchange, specifically for the importation of improved rice seed, could also be an area of intervention for USAID in cooperation with Zamseed.

Maize and Fertilizer

Chapter I outlined the development of agriculture in Zambia from the turn of the century and demonstrated how maize gradually rose from being a relatively insignificant crop to one that dominates the entire agricultural economy. Any intervention that can increase the role of the private sector in maize marketing and reduce the cost of subsidies, without jeopardizing the government's pan-territorial producer and consumer pricing structure, would have significant economic advantages.

Currently, the cooperative societies at village level are the sole buyers of maize (and other crops). The fixed producer price for maize is currently K 80/bag. The controlling Cooperative Unions are responsible for arranging transport from the societies to the Unions' main depots. This transport can take many forms depending on the size and accessibility of the primary market, and ranges from scotch carts to 30-ton articulated trucks. The pan-territorial nature of the producer price means that the value of maize at the primary market is the same as at the Unions' main depot, the transport cost from the outlying market to Union depot being covered by a government subsidy. The Eastern Province Cooperative Union reported that this subsidy currently amounts to K 35 per bag of maize giving a true cost of maize delivered at the depot of K 115/bag. There are no incentives for Unions to minimize transport costs.

The introduction of a dual producer pricing system, where a higher price was paid for maize delivered to Union depots than that paid at primary societies, would have the following advantages, provided the incremental price was less than the transport subsidy:

- Reduce Union transport organizational problems
- Reduce subsidy payments by government
- Introduce private transporters
- Encourage primary societies to organize their own transport
- Benefit the producers in a position to take advantage of the higher prices

Disadvantages include first, the fact that those closest to the Union depots would benefit most; and second, that Union depots are probably not adequately geared to receiving the large numbers of small consignments that would result from such a policy. The first problem could be overcome by zoning price differentials, and the second problem could form the subject of an aid project aimed at encouraging privatization in the market sector linked to a reduction in government subsidies.

If the same argument was used in the case of fertilizer -- a lower price at the Union depot than the controlled price at the primary society outlets -- the benefits for private transportation would be further increased by encouraging the backloading of inputs.

Input Related

The following interventions were identified in this category:

- The supply of inputs through the Zambia Cooperative Federation Commercial Services Department
- The production and supply of lime

Input Supply through the Zambia Cooperative Federation Commercial Services Department

The Zambia Cooperative Federation Commercial Services (ZCF CS) Department is empowered to procure all inputs, apart from fertilizer and maize bags, for the Cooperative Unions. It was established in 1984 as a department of the Zambia Cooperative Federation to undertake import and export business for the Cooperative movement, and, generally, to carry out commercial services that otherwise could not be performed easily by the parent organization. Since its establishment, ZCF CS has been involved in the importation and supply of farm equipment and tools such as ploughs, ridgers, cultivators, hoes, wheelbarrows, and forks as well as tarpaulins, tires, and tools. It has also supplied essential consumer goods. In 1986, for instance, the company sold more than 14,000 ploughs in addition to other commodities to the Cooperatives. It had a turnover of K 14 million and realized a profit of K 3.6 million.

ZCF CS has to build up its capacity both financially and in terms of manpower resources, before it can assume greater responsibilities of handling import and export business for the Cooperative movement. Among other problems, ZCF CS has experienced, in the past, some difficulties in obtaining approval for foreign exchange at the right time for its purchases from overseas. This constraint was raised by the Commercial Manager of ZCF CS with the RRNA team and Agmmark during the completion of the field work (end April), at which time no funds had been allocated for the procurement of inputs either on the local market or through the Foreign Exchange Management Committee (FEMAC). It would be impossible now to have the requisite inputs available for the farmers for the upcoming growing/marketing season.

These constraints were recognized by IFAD in the preparation of the Smallholder Services Rehabilitation project (July 1987). Part of this project (which is about to be implemented) includes an Input Supply and Credit Services component that would involve improvement of the national level cooperative farm input supply and marketing operations by supplementing the procurement funds of ZCF CS and by helping it to develop into a viable and more efficient subsidiary company of ZCF.

Despite this IFAD intervention, it is possible that similar incremental funding could be made available through the ZAMS project, particularly related to marketing and transport. The main items identified in this category are

- Scotch carts
- Tarpaulins
- Tires
- Marketing equipment

Scotch Carts

Transport between place of production and the primary market point, and for the collection of inputs and delivery of outputs is a constraint identified in the rural areas. The demand for scotch carts is high, and those produced locally are insufficient to meet this demand. In addition, because of the current duty system in Zambia, raw materials such as steel required to produce the carts make local production more expensive than the importation of self-assemble kits, which are available in Zimbabwe and the United Kingdom. ZCF is, in turn, constrained by cash flow problems, which limit the number of imported carts. Medium-term credit is available for farmers, through the Zambia Cooperative Federation Financial Services Department, which usually involves a three-year repayment period. The Cooperative staff generally feels that the purchase of scotch carts under these terms is a very profitable investment, and repayments within 18 months are frequent.

Tarpaulins

A major impediment in the preservation of the quality of produce in the marketing chain is a lack of tarpaulins. Some types of tarpaulin are produced locally in limited quantities, and the rest of the country's requirements are imported. Timely intervention with foreign funding to obviate crop damage by rain would result in significant reductions in crop damage and losses.

Tires

There is an ongoing shortage of tires in Zambia. Some tires are produced locally, but production is sporadic because of to shortages of foreign exchange for the importation of raw materials. Tires and spare parts for vehicles are notoriously difficult to procure, reducing the effectiveness of the available transport fleet to almost 50 percent of capacity at times, and having an obvious spin-off effect in the agricultural sector, particularly in relation to perishable commodities. While it would be impossible for ZAMS to intervene in the spare parts procurement market, funds allocated for the procurement of tires or support to the tire industry in making raw materials more readily available would have a considerable impact in the agricultural marketing system. In 1988, ZCF CS imported 7,300 tires, all of which were pre-paid and sold in less than a month.

285

Marketing Equipment

This includes scales, trolleys, cash registers, safes and so forth. Although, in the course of field work this component was not raised frequently since there are many other more serious constraints, additional responsibilities for the Cooperative Unions could make the provision of marketing equipment an essential component of that sub-project.

Production and Supply of Lime for Agricultural Uses

Normally, in an agricultural economy, lime is a relatively inexpensive input compared with fertilizer. In addition, lime has a long-term effect, whereas the effect of fertilizer on the current crop is immediate. However, in the Zambian economy, because of the heavy subsidy on fertilizer, the cost of lime is relatively high. Because of the time lapse for the benefits to be realized, farmers tend to defer application of this important input in favor of quicker acting crop, rather than soil, nutrients.

Lime is required on almost all Zambian soils, but in the higher rainfall areas the requirement is greater. Currently, agricultural lime is only produced at three locations along the line of rail, Lusaka, Kabwe, and Ndola. The entire southern and northern regions of Zambia are unserviced unless farmers are prepared to pay high haulage costs. For example, lime purchased in Kabwe for a Mkushi farm doubles in price, because of these costs.

There are a number of reported dolomitic lime deposits in Zambia that are not being exploited, all of which would probably require further geo-chemical investigation before development. Agmmark believes that, as with so many other interventions, the most appropriate starting point would be to service the commercial farming sector through private enterprise exploitation of deposits at locations adjacent to the demand areas. Later, these commercial lime works, whose existence and profitability would be underwritten by the commercial farmer demand, would be able to expand production and distribution to small-scale producers in more remote areas.

Two locations have been identified that meet these requirements. They are Monze, serving the southern region commercial farmers; and Mkushi, serving the Mkushi commercial farmers and, to a lesser extent, the commercial farms extending up the Tazara railway.

The farmers whom we visited during the completion of the field work felt that the biggest constraint to the exploitation of existing deposits is managerial skills and not, as might be expected, the lack of foreign exchange for the procurement of equipment and services, although that undoubtedly would need to be addressed by any proposed project. This is possibly an area for USAID technical assistance with minimal capital investment. For such a technical assistance program to work effectively it would have to gain the support of local commercial farmers who would then be in a position to offer practical assistance and a committed market.

Infrastructural Support

During field work, interviewees were almost unanimous in regarding the poor state of the country's roads as the single most important constraint on orderly and timely marketing of all crops. The catalogue of disastrous examples to back up this claim was endless.

Attaching a road rehabilitation program to any market-oriented project would seem to be not only desirable but essential. For example, such a road sub-project could be attached to the suggested groundnut or bean project in the Eastern Province.

In addition, two locations have been identified in Zambia that warrant consideration for aid-assisted market infrastructure development. They are the Mpongwe area of the Copperbelt Province and the Zambezi Valley area of the Southern and Central Provinces. In both cases, the government is encouraging investment in large-scale agricultural ventures. In both cases, individual projects are designed with all their own internal requirements for processing, transport, roads, and electricity reticulation, but interlinking facilities between the projects and the markets are non-existent. In the Mpongwe area, there are currently four major projects (only one of which caters to smallholders) and at least three more on the drawing board. Although these projects are primarily export (or import substitution) oriented, their crop rotational requirements result in the production of large quantities of maize. The Cooperatives are obliged to purchase this maize and transport it to the Copperbelt, but their facilities for handling, storing, and transporting grain, and the standard of interlinking roads and communications remain equivalent to those that existed before the projects came on stream, when the area produced no more than a few tons of surplus annually. Similar circumstances are beginning to materialize in the Zambezi Valley.

From the point of view of USAID, the Zambezi Valley infrastructural and marketing requirements appear to warrant particular attention, since all the projects in that area have a degree of U.S. private or quasi-government participation, and any intervention would support these enterprises. In addition, USAID is currently supporting the rehabilitation of the Kafue to Chirundu Road, which is the main artery linking the Zambezi Valley to Lusaka, and extensions from this road would form part of a logical network.

Financing

Emphasis has been placed throughout this report on how important export-oriented agricultural production is in overcoming the burden of government intervention in the local markets and in overcoming the short- to medium-term lack of internal demand. Reference has also been made to the overvalued kwacha and the adverse effect that it has on Zambia's capability to export its commodities competitively.

In order to overcome these constraints, export producers require either 'cheap' investment funds/working capital or some form of price support in kwacha, or a combination of the two. Recognizing this problem, the

government has introduced a number of measures through the Bank of Zambia, through which these conditions can be met. In the sphere of providing 'cheap' investment funds, debt held in the trade creditor pipeline can be discounted or swapped for equity. In the case of debt for equity swapping, there is little leverage in increasing the real kwacha:dollar rate, but it is a mechanism through which substantial funds can be invested and where incremental foreign exchange for such investment is extremely hard to find. Kwacha funds released through either mechanism are recognized as foreign denominated, and as such, attract foreign exchange dividends. For export-oriented projects these dividends are payable through the retention.

For any dismantling of trade debt, the Bank of Zambia has an obligation to provide kwacha at the current rate of exchange for debt that entered the pipeline at a much lower rate of exchange. Debt holders are obliged to make up the difference between the rate at which they deposited kwacha against the debt and the Bank of Zambia's ruling terminal rate. The Bank's terminal rate for bills entering the pipeline prior to January 5, 1983 is K 0.96:US $1 and for bills entering the pipeline between January 1983 and October 1985 the rate is K 2.19:US $1. Thus, for bills whose terminal rate is K 0.96, the Bank has to find K 7:US $1 value; and for bills whose terminal rate is K 2.19, the Bank has to find K 5.79:US $1 value.

The funds generated for the 'top-up' by the Bank of Zambia represent new money in circulation, and since the GRZ already has a budget deficit, with no allocation to any expenditure category to cover this commitment, the only way to make up the difference is to print more money, with all the concomitant inflationary effects.

The Bank of Zambia is well aware of this problem, and is currently restricting the number of projects with approval to use pipeline debt as a step towards controlling inflation. This will have serious implications on the ability of a number of ongoing and planned commercial development projects to be implemented.

An imaginative intervention for the U.S. government would be to apply a portion of their counterpart funds as a grant to the Bank of Zambia to cover all or part of the bank's portion of the top-up for USAID/Bank-approved projects. For example, it is understood that USAID has an interest in the Chiawa cotton project, which will undoubtedly apply to the Bank for use of pipeline funds to finance the development work. Any apprehension on the part of the Bank to finance the top-up would be considerably alleviated if the GRZ were not liable for the entire amount. This concept could also be linked specifically to the dismantling of U.S. trade debt and to supply contracts for goods and services originating in the United States.

APPENDIX 1. STATEMENT OF WORK

A. INTRODUCTION

USAID Zambia is in the process of designing a project in Agricultural Marketing. The mission has narrowed the initial focus of the project to four marketing functions -- transportation, storage, processing, and grades and standards -- and to the three general commodity groups -- oilseeds (sunflowers, soyabeans, and cottonseed), minor field crops (millet, sorghum, and cassava), and fresh fruits and vegetables.

The Study - A study of the oil seed sector in Zambia has provided the mission with very good information and data on the oilseed sector; however, such information does not exist for the minor field crops, and the fruit and vegetables subsectors. This information/data gap must be filled before the Project Paper design team begins its task.

B. OBJECTIVE

The objective of the study will be to establish that data based on the production, marketing, and processing of fresh fruit and vegetables; and the production, marketing, and processing of millet, sorghum, and cassava all for the domestic market. This will include determining the following:

- Number, size, and location of fresh fruits and vegetable producers who supply the large population centers and processors
- Number, size, and location of firms or individuals engaged in the marketing of fresh fruits and vegetables to the large population centers or processors
- Number, size, and location of the major processors of fresh fruits and vegetables
- Type of processing presently available for fruits and vegetables
- Number, size, and location of significant production areas of millet, sorghum, and cassava
- Number, size, and location of firms or individuals engaged in the marketing of millet, sorghum, and cassava

- Number, size, and location of processors of millet, sorghum, and cassava

- Type of processing presently available for each of the commodities

The study will also identify the major constraints in transportation, storage, processing, and grades and standards faced by the marketing and processing firms in the fresh fruits and vegetables subsector, and in sorghum, millet, and cassava. Further, the study will identify the type and kind of assistance that USAID appears to be best qualified to supply to overcome these constraints, in the context of the proposed ZAMS project.

The three items above for each of the general commodity groups will be accomplished through reviewing secondary information and holding interviews with individuals involved in the fruit and vegetables and sorghum, millet, and cassava subsectors.

USAID/Zambia will utilize two consultants from Robert R. Nathan Associates, Inc. to manage, under the general guidance of the mission's agricultural economics officer, the activities to be conducted under this PIO/T. The consultants will not have a general knowledge of Zambia, and will need assistance in collecting the necessary data/information. The purpose of this PIO/T is to provide that assistance to the consultants.

C. SCOPE OF WORK

Under the guidance of the USAID/Zambia consultants, the contractor will:

- Review the secondary data that can provide information on the structure of the fresh fruits and vegetables and sorghum, millet, and cassava production and marketing

- Identify the major production areas for fresh fruits and vegetables and sorghum, millet, and cassava

- Conduct field surveys and investigations to determine the number, size, and location of firms involved in transportation of fresh fruits and vegetables and sorghum, millet, and cassava and the constraints faced by those firms

- Conduct field surveys and investigations to determine the number, size and location of firms involved in storage of fresh fruits and vegetables and sorghum, millet, and cassava subsectors and the constraints faced by those firms

- Conduct field surveys and investigations to determine the number, size, and location of firms involved in storage of fresh fruits and vegetables and sorghum, millet, and cassava subsectors and the constraints faced by those firms

Using the information gained from the above activities, the contractor will:

- Provide the USAID/Zambia consultants with draft reports on their findings and conclusions
- Discuss the draft reports with the consultants
- Assist the consultants in writing the draft final report to be submitted to USAID/Zambia

The studies will begin as soon as arrangements can be made; all field work must be completed by May 13, 1988.

D. REQUIRED REPORTS

The contractor will be required to furnish the USAID/Zambia consultants with draft reports of the field findings, including the constraints identified during the field investigations. The Contractor will also furnish the USAID/Zambia consultants with copies of any secondary data used in the investigations.

ANNEX 1. COOPERATIVES AND AGRICULTURAL MARKETING IN ZAMBIA

292

Introduction

It is the stated policy of the Government of Zambia to make the Cooperative Unions the main marketing agents for agricultural products. To a considerable extent, the Cooperatives have become just that.

The Ministry of Cooperatives has been renamed the Ministry of Marketing and Cooperatives in recognition of the fact that Cooperatives totally control the marketing of the principal crop, maize. Coops also enjoy a dominant position in the marketing of other commercial crops such as groundnuts, cotton, soyabeans, and sunflower.

The dominant position of the Cooperatives in agricultural marketing has been further strengthened recently by the disbanding of NAMBoard, the National Agricultural Marketing Board, which until recently had been charged with the distribution of maize to millers and the distribution of fertilizers to farmers. Most of the functions and responsibilities of NAMBoard have now passed to the Ministry of Cooperatives.

Government Support and Government Control

Government support of cooperative societies in the agricultural sector takes various forms, beginning with special legislation facilities for the formation and regulation of cooperatives. A whole Ministry has been set up to encourage the formation and improve the operation of cooperative societies. Government officials and the UNIP party are constantly extolling the merits of forming cooperative societies and the advantages that these societies have in accessing government services.

Government participation in the management of cooperatives goes beyond advisory and supervisory services. The principal officials of all major cooperatives are government appointees rather than officials elected from the cooperatives' members. Public financial assistance to cooperatives ranges from the provision of loans at negative real rates of interest to direct payment of subsidies to cover the losses of the cooperative societies. Cooperatives also receive preferential treatment in the allocation of scarce inputs such as fertilizers, grain bags, import licences for vehicles, equipment, spare parts, and raw materials. In some cases, the government specifically bans the activities of traders; for example, until very recently it was illegal for private individuals to engage in maize trading and movement.

Cooperative Principles

Membership in these agricultural cooperatives is rather diffuse, since all peasant farmers in a given district automatically belong to that District's cooperative. At the same time, these supposed members have little say in running the cooperative, in electing the leadership, or in supervising their operations, or in allocating the cooperative's funds. Financial results are presented to the government, but not to the membership.

Under these circumstances, the District and Provincial Cooperative Unions can be called cooperatives only in name, and for all practical purposes have become merely commercial agents of the government for the collection of rural produce and the distribution of farm inputs. Neither the democratic management principles nor the financial independence expected in the cooperative movement exists in these organizations.

Stifling of Private Trade

Given the advantages conferred by the government upon cooperatives it is not surprising that they have almost completely taken over the marketing of all commercial crops in the country. The adverse consequence has been that the development of private Zambian trading activities in the countryside, and even in urban areas, has been stifled. No private business can compete in trade against a cooperative whose total operational costs, including losses, are covered by the central government. In the Eastern Province, for example, the government subsidizes the Provincial Cooperative Union with 35 kwacha per bag of maize handled from villages to central depots. Private traders could surely do the job for less, but cannot since the cooperative gets reimbursed and they do not.

Confusing Rationale for Cooperative Trade

It is not clear why the government (and several donors, Scandinavia especially) place such stock in promoting the marketing of farm products through cooperatives. The principal reason seems to be ideological. Cooperative trading seems to agree with socialist and humanist principles. It bypasses the suspect private trader, who is in trade purely for personal gain. Private profit is viewed as slightly dishonorable, while profitless trading is acceptable, and money-losing trade is, to a certain extent, socially desirable.

There are valid economic reasons for farmers to organize themselves into cooperatives for selling their products, and purchasing inputs. But a cooperative is supposed to be a self-supporting business enterprise in which capital is provided and activities carried out by the cooperative's members. The society may benefit from economies of scale in product collection and distribution and greater bargaining power, or it may operate where there are no private traders or suppliers, or it may enhance the creditworthiness of its members. Cooperatives may also undertake certain activities such as price information dissemination that individual producers or traders will not undertake because the benefits cannot be captured.

All these advantages should permit cooperatives to compete with traders on a favorable footing without any special privileges and support from the government or foreign donors. In such cases, the cooperatives play an important complementary role to private efforts and are preferable to direct government participation.

No Need for Subsidies

However, if cooperatives are indeed well adapted for agricultural trade in Africa, they should not need to be subsidized. When the cooperative societies depend on permanent government and donor support, their economic justification is put in doubt. Their survival and progress no longer indicate higher commercial efficiency than private firms, but merely the result of the advantages and privileges created for them by the government. These are especially injurious when the support is in the form of general financial grants, as in Zambia, in addition to restrictions on the activities of private competitors, such as bans on trading in maize, and preferential treatment in the allocation of foreign exchange and import licences.

Serious and obvious inefficiencies can result from such restrictive practices. Many observers, for example, remark on the surprising absence of small trucks that would normally be used by traders to carry produce from farms to towns and markets. One apparent reason is that foreign exchange allocations at the official overvalued rate and import licences for vehicles are granted first to government agencies and agricultural cooperatives. Of course, these institutions prefer large 10-ton trucks for hauling products and vehicles for their managers, rather than the dual-purpose, small pick-ups that private traders would find most appropriate. Private traders also will find it enormously difficult, if not impossible, to overcome the foreign exchange and import license barriers.

Advisory Services and Technical Assistance

A case can be made for providing initial support for farmers cooperatives in the form of advisory services and technical assistance to help them get acquainted with problems of organization and marketing. But this should not be construed as rationale for permanent state support, which in Zambia has become government control. Such assistance undermines the very self-reliance that cooperatives are supposed to foster. It conveys the opposite message, that economic advancement can be gained only through special privileges granted by government, rather than effectiveness in satisfying the needs of members or customers.

Conclusion

The combination of subsidized government cooperatives in the marketing of maize and pan-territorial pricing for maize has effectively suffocated the development of an indigenous group of private traders, not just in maize, but in other commodities as well. Now that government subsidization has become institutionalized, it has become practically impossible for the government to

refuse or reduce their liability, especially since they have developed a constituency of members grown accustomed to the favors for the coops.

Policy Implications

A couple of implications for the ZAMS project derive from the preceding analysis. First, the present system of agricultural marketing dominated by subsidized cooperatives makes it extremely difficult to encourage the development of private sector trading activity in crops directly and indirectly affected. Second, efforts should be initiated to explore ways to make the cooperatives truly self-sustaining and reduce the magnitude of subsidies from the central government. Only then will private trade have an opportunity to emerge. Third, we need to identify specific areas and functions where the cooperatives could begin to withdraw, to allow gradual participation of private traders in carrying out marketing activities. Fourth, advisory services and technical assistance in agricultural marketing could be offered to both cooperatives and private concerns on a cost-sharing basis and for well-defined periods of time.

ANNEX 2. AGRICULTURAL MARKETING POLICY IN ZAMBIA

297

Introduction

In the domain of agricultural marketing policy, Zambia constitutes one of the extreme cases of state-managed marketing systems. Many years after other far less developed African countries have relaxed or abandoned direct government involvement in crop and livestock marketing as impractical and ruinous, Zambia is headed in the opposite direction. The state is taking over a larger and larger role in marketing farm products and is restricting private sector participation more and more. The outcome is the same whether it is by design or the unintended result of other policies.

The specific activities and orientation of the Zambia Agricultural Marketing Support project must take into account the rather disheartening climate for the promotion of private sector activities in trade and marketing, at the present time. Since the current sorry state of affairs is more the result of policies and government activities, *ad hoc* interventions to relieve this or that constraint will not address the fundamental causes of the problem. Rather, ZAMS should be designed, in partnership with the government, as a program of gradual development and promotion of private trading activities, especially in those areas the government finds most onerous.

From Field to Fire

The government's helping hand reaches across the entire marketing chain, from the moment farmers begin planning for the next planting season until the consumer prepares the meal in the kitchen. The government's role in agricultural production is fairly well known in the case of maize, the dominant crop in the farm sector. It ranges from setting producer prices for grain to subsidized prices for fertilizers and other inputs, credit for farmers, seed distribution and production, and extension services during the growing season.

State Monopoly in Maize Marketing

Less conspicuous is the government's complete control of the marketing of maize from the farm onwards. It begins with the importation of grain bags by a state monopoly, and their distribution at controlled prices to the district cooperatives for subsequent distribution to farmers. Primary societies collect the grain from farmers, store it, and forward it to regional collection depots run by so-called cooperatives which are run by the government. Another parastatal, NAMBoard, was responsible for taking the maize, storing it, transporting it, and distributing it to millers in the principal consumption centers.

The millers are also owned by the government, and their losses are covered by the State. Mealie meal is sold by millers to State-owned retailing chains like Niec and ZCBC. Consumers buy their grain from these stores at controlled and subsidized prices for less than farmers are paid for the grain. Even the matches used in the kitchen to light the fire to cook the meal are bought at a strictly controlled price.

Shrinking Private Sector

Two recent government actions have resulted in the near total elimination of the private sector in the marketing of maize, the basic staple of the Zambian diet. In May 1987, when Zambia abandoned the economic recovery programmed agreed upon with the IMF and the World Bank, the government also decided to nationalize all the maize milling companies in the country. Until then, many of those companies were privately owned and operated, although their prices and costs were closely controlled by the government.

Another blow to private marketing came in February 1988 when, under newly passed, extraordinary powers, the government made a major crackdown on private trade, closing many of the few remaining private shops (which were owned by expatriates to a large extent) on the suspicion that they were supplying the black market that has developed for basic commodities like maize, cooking oil, sugar, bread, soap, and cigarettes.

As part of the campaign against the black market in basic goods, the government arrested and jailed large numbers of unauthorized vendors, many of them engaged in petty trade in fruits, vegetables, chewing gum, and so forth. Their property is confiscated or destroyed, and often the vendors are physically abused and fined. Enforcement of the ban on street selling is effectively done by both police and UNIP party vigilantes. Despite the high unemployment reported across the nation, Lusaka is today conspicuosly devoid of street vendors of any kind.

Illegal Trade

The fight against the black market demands constant vigilance, and party and government officials are constantly being exhorted to bring to justice those engaged in it. Street vending is synonymous with black market, in Zambia's case, since even chewing gum, matches, and cigarettes have price controls. But even those vendors selling goods free from price controls run afoul of the law.

For example, 20 women street vendors from Lusaka's Garden Compound, reports the Daily Mail of February 8, 1988, were rounded up, beaten, taken by District Council police in trucks, and dumped 50 kilometers away from Lusaka, after having their goods confiscated. The women operated around a bus stop selling maize cobs and mushrooms. Similar treatment of street sellers is a common feature in the daily papers.

Another common sanction used against established traders is reported by the Daily Mail of February 24: "Government has started withdrawing

citizenship from naturalized Zambians whose licenses were revoked last weekend, and has offered rewards for information leading to businessmen abetting black marketeers and hoarding currency." Many of those shops were taken over on the suspicion that they sold to customers who later resold in the black market. Once these traders are stripped of their citizenship, they are deported. Few of these traders have been convicted or even brought to court, but their shops are now being opened under the management of one of the government-owned supermarket chains. The government "appealed to the public to be vigilant and expose traders who stock the black market and those hoarding goods and money."

Ideology

What these government activities suggest is a generally negative attitude towards traders or merchants, whose activities are viewed as akin to daylight robbery, and therefore state take-over of trading is a necessary and desirable economic policy. The view of merchants as the bad guys is not peculiar to Zambia, or for that matter to Africa. It is, in fact, shared by most farmers and people in Europe and the United States, but in the latter these attitudes have not become embodied in economic policy. In Africa, however, and in Zambia in particular, these negative images of trading as exploitative have resulted in the state takeover of the distribution sector. Moreover, the predominance of foreigners among the trading community has exacerbated the negative feelings against trade itself.

Inherent Inefficiencies

Unfortunately, the scarcity of trained managers and the very nature of agricultural commodities make it extremely difficult for the Zambian government to implement a centralized decision-making system for the sector.

State takeover is particularly unsuited to the marketing of food and perishable products. A state trading sector inevitably involves greater centralization of decision making, larger scale and more complex organization, and personnel with high technical and managerial skills. And the results are invariably less satisfactory than the private trade. The contrast is most clearly seen in the supply of fruits and vegetables in the state-run supermarkets in Lusaka compared with the variety, quantity, quality, and prices of that found in public markets. However, in the public market decisions and transactions are made by a large number of traders without any formal education whatsoever, while ZCBC and Mwaseni, with certified accountants and administrators, perform a deplorable service.

Waste of Talent

State trading therefore involves a serious waste of manpower resources. On the one hand, the skills, training, experience, and talent of the few educated managers are wasted selling cucumbers and tomatoes, while depriving the general government administration of their talents. On the other hand, the raw energy, hard work, and initiative of the community of private traders is stifled. It is a serious misallocation of human skills to have trained people running retail shops at government salaries while street vendors are

being put in jail. "Nothing in Marxism-Leninism says that the State should involve itself in selling tomatoes," President Nyerere has reportedly said. The principle is as applicable in Zambia as it is in Tanzania.

Enterprises in Zambia operate under extremely difficult conditions. Distances are great, the markets small, climate unpredictable, communications uncertain, managerial skills scarce, spare parts and raw materials hard to find, and foreign exchange hard to buy. Even the simplest company is a challenge to run, and those in the agricultural marketing sector have special problems besides. The timing of decisions is crucial, production is scattered, roads are nearly non-existent, prices are uncertain, credit needs granting, pilferage is rampant, rodents are everywhere, transport is difficult, there are no grades, no standards, no measures, and so on. In these conditions, centralized decision making and control are hopelessly impossible to put into effect. At best, state trading ventures become heavy burdens on the public treasury; at worst, they can wreck the whole agricultural marketing system. In Zambia, we are close to doing both.

Price Controls, Corruption, and Smuggling

Unable to cope with the constant need to make decisions about buying, selling, prices, storage, transport, and so on, the maize marketing parastatals in Zambia resort to the crudest possible solution: one single price for maize, for all seasons, for all places, for any quality, for both producers and consumers. The problems created by such a system of rigid prices, and the concomitant need to enforce price controls at all levels, are already well known and documented.

Not as well understood, however, is the deleterious effect that such price policies have on the breakdown of public abidance of the law. Both daily newspapers in Lusaka report, every day, rampant black marketeering on essential goods, corruption in state-run enterprises with access to those goods, smuggling of subsidized foods to neighboring countries. All of these are logical and obvious consequences of the system of fixed prices.

The cost to the public of these self-inflicted problems, and the profits to be generated by avoiding them, create the incentives for breaking the law. Bread right now is in short supply all through Zambia. People stand in line for hours before sunrise in front of the State-run bakeries. Some enterprising and unemployed youths are willing to stand in queues for hours to get two loaves of bread. They later offer to sell the same loaves to passing motorists on the way to work, at prices higher than officially mandated. Right away they become black marketeers. Police round them up but others take their place. Some of them are now being shipped to resettlement camps to relieve their idleness. Motorists now have to stand in line.

Smuggling is another scourge generated by the pricing policies of Zambia. When the price of mealie meal in the Copperbelt towns is one-tenth the price across the border in Zaire, the incentives for smuggling and corruption of customs officials and border police are unbearable. People are literally being shot to death trying to smuggle bags of maize across the border.

It is utopian to believe that political exhortation alone will reduce the incidence of this type of economic criminality. When self and public interest is so evidently at variance with official mandates, it is not long before people start losing faith in their leaders and respect for the laws.

What Is to Be Done?

The important question may not be whether state trading is doomed to failure or how much less efficient it is than private trading Rather, for the ZAMS project, we need to ask what alternatives can be suggested. To the extent that there are already a few African traders ready to perform marketing functions in the agricultural sector, the obvious goal should be the work toward a gradual transfer of these activities from the state to these individuals. The major impediment to this alternative is ideological, the fear that a rich and exploiting class of native traders would develop, with the potential for accumulating economic as well as political power.

For much of the agricultural product marketing however, there are practically no indigenous traders to speak of. This is perhaps the most severe indictment of the state trading system in Zambia, that it has prevented any private national group of traders to emerge for the most important crops. In such a case, the groups most likely to benefit from a withdrawal of the state from trade would be the better financed and established expatriate traders. Nationalist feelings are too strong to accept a racially different group of people gaining a predominant role in a visible and strategic sector of the economy. Economic rationale may be irrelevant in that case.

Perhaps the best to hope for is to use ZAMS as a way to develop and nurture Zambian trading professionals through well selected measures on credit for commercial uses and investments, advisory service and technical assistance, training programs, and mutually advantageous arrangements with the existing state trading agencies or cooperatives. This approach is not without its pitfalls, in that it becomes administratively difficult to select some individuals to receive special favors in the hope of encouraging those who have demonstrated ability in competing and surviving in the market place. Inevitably, such a selection will be affected by personalities and political and ethnic considerations. But these problems already exist within the current state-dominated trading system, without the restraints imposed by a more open and competitive market.

ANNEX 3. RURAL TRANSPORT AND OXCARTS

Rural Transport and Oxcarts

Rural Transport Bottleneck

In the course of several visits to the field and some provincial capitals, it has become more and more evident that one of the principal constraints in agricultural marketing for all commodities is the transport from the farm to town or from farm to nearest paved road.

As an example, the General Manager of the Eastern Province Cooperative Union reports that farmers deliver grain to the Primary Societies collection points in each village. The Union then arranges for the grain to be picked up at the villages and transported to the Union depot in one of the major towns or in Chipata itself. The average cost of transporting and handling to the Union was 35 kwacha per 90-kg bag. In contrast, the cost of hauling the same bag from Chipata to Lusaka, a distance of more than 600 kilometers, was 23 kwacha. It costs, therefore, more to move the bag from the farm to the Union depot, an average distance of say 15 kilometers, than to move it to Lusaka.

The Eastern Cooperative Union pays farmers 80 kwacha per sack, and sells to either NAMBoard or to millers at the same price. The costs of the Cooperative Union in transport and handling are covered by the central government. Periodically, the Union gets a subsidy of 35 kwacha per bag handled.

Under the current arrangement, there is no incentive to the Union to economize on transport costs since they get automatically compensated by the central government for whatever they spend. At the same time, the development of private transport services has been discouraged by the lack of any price incentive to farmers to arrange by themselves for the delivery of grain to the Union depot.

There is a potential therefore for private traders and transporters to emerge, which until now has been stifled by the lack of price differentials for grain. Since maize constitutes such a large proportion of marketable output, the lack of transport services has affected other crops as well.

Import and Distribution of Oxcarts

In order to alleviate the lack of rural transport, ZAMS will arrange for the import and distribution of alternative rural transport modes. The most obvious alternative is the provision of oxcarts, since many farmers already have the oxen that they use for farm traction. At the moment, there is ample demand for oxcarts, according to the Commercial Manager of the Zambia Cooperative Federation, demand that is unmet because of the absence of foreign exchange for importing them, and lack of capital to finance local production.

Other transport alternatives should also be considered, for example, human-powered vehicles such as bicycle rickshaws, bicycles, push-push carts (lots of them in and around Lubumbashi), donkey carts, and even donkeys. [One intriguing issue is why no donkeys are used for transport in Zambia, when they are so prevalent in the rest of Africa, even in Zimbabwe].

Of course, whenever there is local production of these items, the impact of imports on the local industry should be considered. However, if the cost of local production turns out to be excessively above the import cost, imports should be admissible. Local prices for the imported item, for example, could be set sufficiently high to avoid undercutting the local manufacturer unnecessarily.

Whenever technically possible and financially viable, imports of components for assembly in Zambia should be contemplated. Again, the cost of local assembly should be balanced against the imported cost.

Deteriorating Rural Roads

A serious concern in the Eastern Province, and possibly in other provinces as well, is the worsening state of the rural road infrastructure. The Eastern Cooperative Union last year was having difficulties getting trucks to go into some districts with poor road maintenance and, in some cases, had to subcontract farmers with oxcarts to get the grain out to more accessible pick-up points.

Responsibility for maintaining rural roads has now been transferred from the Ministry of Agriculture to the District Councils, but they have not been given the necessary budget for doing the job. Slowly but surely, the roads will become less and less passable for motorized vehicles.

ZAMS can help. Local currency proceeds from the sale of the marketing implements imported could be allocated for the rehabilitation and maintenance of rural roads. Clearly, the proceeds will be insufficient for the needs, so that some kind of cost-sharing arrangements with the local District Councils will be needed.

Central Depot Pricing

More than 80 percent of farm produce marketed is maize. The merits of improving rural transport will be seriously compromised if the transport of maize is excluded. At present, no private transport takes place because the price at the Union depot is the same as in the village.

An essential element for the success of private rural transport requires compensating farmers or village-level primary societies for the transport costs incurred in bringing the product to the Union depot. This compensation is best accomplished by offering a higher price for bags of grain delivered at the Union depot than for bags received at the primary societies.

The increase in price should, of course, be smaller than the current average transport and handling cost per bag of grain. The Union will save some money from not having to pay for the transport, thus reducing the subsidy that it must request from the central government. Farmers will benefit from higher prices for their grain, even after allowing for transport in oxcarts of their own or hired ones.

Farmers in remote villages with transport costs much above average will surely complain that their net price under the new system is not as favorable as before. Equity issues will have be be weighed in deciding whether those farmers in far away villages are entitled to a higher price than farmers near the Union depot. One possible alternative is to continue purchasing grain from those far away villages at the current price of 80 kwacha per bag.

Coordinating Deliveries

During the peak harvest season, the Union depot might be faced with the simultaneous arrival of many small trucks and oxcarts with grain. This could lead to long lines of vehicles waiting to be unloaded. Right now this problem does not arise because the Union itself coordinates the transport of the grain throughout the season.

It will become necessary for the Cooperative Union to take steps to handle grain deliveries from many farmers and primary societies at the same time. Increasing storage facilities and grain handling capacity will become necessary to address this potential problem. Some simple solutions might be adopted as stop-gap measures for the first years, while more permanent solutions are found. For example, unloading trucks onto pallets will release the trucks to do more trips instead of waiting to be unloaded. The pallets could later be moved with forklifts to warehouses or elevators.

ZAMS could help finance some of these facility expansions with the counterpart local currency generated from the sale of imported commodities.

Distribution of Oxcarts

As much as possible, the distribution of oxcarts and other rural transport equipment will be done through established farm input delivery channels, rather than trying to set up new ones. Right now, farmers have access to farm implements and inputs through either the Cooperative Unions or through NAMBoard. There is a plan to transfer many of the functions performed by NAMBoard to the Cooperatives and leave NAMBoard mainly as a buyer of last resort and in charge of maintaining a security stock of grain. This plan is fairly advanced and the reorganization will likely take place within the next few weeks. The main stumbling block is the large number of NAMBoard employees who will be laid off (4,000 according to some sources).

The Zambia Cooperative Federation Ltd. (ZCF) is a nearly private group charged with doing most of the procurement for the Provincial Cooperative Unions. Although the Cooperative Unions are entirely controlled by the State, the ZCF is allowed to follow some commercial practices, including adding a considerable mark-up and profit on items it distributes. Under the new plan for NAMBoard restructuring, ZCF will take over the Implement and Chemical Division of NAMBoard; that is, it will be charged with the procurement and distribution of farm implements and chemical inputs. However, fertilizers and grain bags will remain the responsibility of NAMBoard; ZCF has not accepted these items because their prices are controlled. The prices of grain sacks are controlled; and, not surprisingly, there is a serious shortage of grain bags for the next harvest.

Since ZCF already has a well-established network of distribution of farm implements through the Cooperative Unions, they are already well placed to serve as the importers and distributors of the ZAMS oxcarts and other transport equipment. The Commercial Manager at ZCF is well-experienced in the entire procedure for ordering farm equipment from overseas suppliers, including documentation requirements, foreign exchange regulations, custom clearance, and shipping arrangements. The main constraint at the moment for ZCF to expand its limited imports of farm implements is the lack of foreign exchange and the kwacha to purchase foreign exchange. This is where ZAMS might be able to help.

Once imported into the country, oxcarts could be distributed through the Provincial Cooperative Unions to farmers. Other alternative outlets could also be considered, such as tractor distributors, service station chains, truly private cooperatives, or private traders of similar products. It is anticipated that the Cooperative Unions could easily handle the distribution of the first few shipments.

Market Pricing of Oxcarts

Farm implements do not have controlled prices. (That explains why a $1,000 dollar pump can cost a farmer 35,000 kwacha.) It will be possible to price the imported ZAMS oxcarts at realistic prices, rather than at the kwacha equivalent at the official exchange rate. ZCF, for example, has recently

imported more than 7,000 tractor and light-truck tires which were sold within one month, generating a K 14 million profit for ZCF.

As an illustration, ZAMS could provide the foreign exchange to import a $500 oxcart that is received by ZCF. ZCF, in turn, could sell it to, say, the Eastern Cooperative Union for K 12,000, keep K 2,000 for ZCF, and turn the remaining K 10,000 to ZAMS. ECU, in turn, might sell it to a farmer in the Eastern Province for K 15,000, after allowing for transport cost and mark-up.

An important consideration in pricing decisions is the impact on local workshops now making oxcarts. Pricing at the official exchange rate could severely undercut their business, if not destroy it. A market price orientation would be preferable, as much as possible.

Local currency proceeds from the sale of oxcarts received by ZAMS could subsequently be used for marketing development activities. Perhaps the highest priority should be given to the rehabilitation and maintenance of feeder roads in agricultural areas. Since most of the cost of maintenance is labor, the main beneficiaries would be the local rural population.

Central Point Pricing of Inputs

A possible extension of the same scheme concerns the pricing of fertilizers and other farm inputs which are priced the same at the village level and at the central distribution points. The availability of oxcarts will enable many farmers to transport these inputs from the central points if an appropriate price discount was made, thus saving the Cooperative Union the cost of transporting them to villages. Discussions with NAMBoard along this line could be initiated as part of the ZAMS design process. The same type of benefits could be realized by allowing farmers to transport the inputs themselves: lower cost to farmers, reduced subsidies from the government, and more timely availability of fertilizers.

ANNEX 4. ZAMS DOLLARS AND ZAMBIA'S DEBTS

Zambia's Debt Cannot Be Paid

USAID/Lusaka's Country Development Strategy Statement concludes that it is unrealistic to expect that Zambia will be able to honor its enormous foreign debt before the end of the century. Even under the most optimistic of circumstances regarding the performance of the economy and likely favorable prices for copper, the level of export earnings for the foreseeable future will be insufficient to cover the debt servicing burden.

Debt servicing obligations in 1986 had risen to more than 95 percent of exports of goods and services. As a percent of the budget deficit, debt service reached 93 percent in the same year. The financial situation has only deteriorated since, especially once Zambia abandoned the economic recovery program that it had negotiated with the World Bank and the International Monetary Fund. As a result, both institutions have withdrawn all support to the country, including suspension of disbursements on projects currently in progress. So far, Zambia has been unable to pay the US$400 million in arrears to the Bank to allow the resumption of financing for the suspended projects. Similarly, Zambia is technically in default with the U.S. government for failure to pay about $3 million in arrears on U.S. loans and risks suspension of further USAID funding under the Brooke's Amendment.

The Peruvian Solution

Unable to stay current on its foreign debt, not to mention the need for foreign exchange to pay for essential imports, the Government of Zambia has unilaterally imposed a limit of 10 percent of export earnings for the repayment of debt. This solution releases funds for essential imports to keep the economy moving, but at the cost of mounting debt as interest on arrears accumulates on top of the original debt.

Needless to say, all commercial credit to Zambia has come to a stop. All imports must be paid cash in advance, and the government is unable to borrow from any bank or international organization. The country is living from one day to the next, using only current earnings for its exports. Creditors will have to wait indefinitely to collect on their outstanding balances. Most of the outstanding debt is owed to multilateral lending agencies, but considerable amounts are also held by commercial banks and private enterprises, many of which are based in the United Kingdom.

Overvalued Kwacha

To make matters worse, the Zambian government has adopted a fixed exchange rate policy that has resulted in a vastly overvalued currency. For the past year the kwacha has been exchanged by the Bank of Zambia at K 8:US$ 1. But the last market rate at the foreign exchange auctions, which were also suspended a year ago, was running at more than 20 kwacha per dollar. Predictably, the officially cheap dollars have led to an excess demand for imported goods, while penalizing exporters who now receive only one-half or one-third of the kwacha that they would get at a more realistic exchange rate.

The severe shortage of foreign exchange has led to administrative allocation of import licenses by FEMAC, the Foreign Exchange Management Committee. Every week the newspapers publish the list of the lucky applicants whose import permits have been approved, along with the amount and purpose of the imports. It also includes a much longer list of those petitioners whose applications were not successful.

White Market Kwacha and the Official Rate

The suspension of the auction system has left the official rate as the only legal exchange alternative. Tourists and consultants are obligated to change their foreign currency at this rate through the banking system. Transactions currently made with U.S. government funds are also made through this "White Market" exchange rate. This sometimes leads to ludicrous results, such as making it cheaper to import potatoes and tomatoes by air freight from South Africa for the U.S. Commissary than buying the local produce with kwacha bought at the official rate.

USAID development funds currently being transferred to Zambia are therefore greatly undervalued at the official rate. The impact of these funds on the local economy will accordingly be diminished. The beneficiaries of this imbalance are the Bank of Zambia which gets cheap dollars and the lucky recipients of import licenses.

Black Market Kwachas and the Parallel Rate

When the real value of foreign exchange is so much greater than the official rate, the temptation for individuals and companies to make private exchange transactions outside official channels proves irresistible. Nevertheless, it is surprising that there is no conspicuous black market for dollars in Lusaka or in Ndola, when profits of 200 percent can be made in a single transaction. The absence of a black market is due to the strict and severe penalties against individuals who engage in these exchanges, and the general discipline and law abidance of the Zambian population.

Across the border in Zaire, both in Lubumbashi and in the border towns, kwachas are openly traded against zaires for three to four times the official

rate. This trade is the counterflow for both legal and illegal trade between the two countries taking place all along the permeable border.

No currency needs to be transferred to engage in the black market trade. Any Zambian national with a bank account abroad can have dollars deposited in that account; in exchange, he or she gives a corresponding amount of kwachas in Zambia to whoever arranged for the deposit. All these transactions are illegal and rightly denounced by the authorities.

Green Market Kwachas and 50 Percent Retention

Aware of the severe damage to imports from the overvaluation of the kwacha at an unrealistic rate, the Government of Zambia has sought to alleviate the damage to exporters by instituting a 50 percent retention scheme. Under this scheme, half of the foreign earnings from exports are changed at the official rate of 8:1 and the other half the exporter can either use for his own imports or transfer to someone else to do imports. The imports in question still have to get the approval of the FEMAC committee and fall within the priorities established.

A private market for these so called "green kwacha" has developed, whereby importers in need of foreign exchange can purchase it from the 50 percent retained by exporters, at whatever rate the parties agree. Each transfer is a private matter between the exporter and the prospective importer; the Bank of Zambia is notified and has to agree to the transfer, but the rate at which the foreign exchange was purchased is not recorded.

One advantage of the green kwacha market is that it allows the government to maintain the fiction that the official rate is still the operative rate. It doesn't need to acknowledge that importers are actually paying three or four times the official rate. Separate licenses are issued for those importers using the 50 percent retention funds (green kwachas), apart from those using the official rate (white kwachas).

Red Market Kwachas and Debt Dismantling

There is another foreign exchange market not as well known as the green kwacha, but it is also quite legally used by some large exporters. Let's call this the red kwacha market, since it involves outstanding debts.

Remember all those private concerns overseas which the Bank of Zambia owes but cannot pay in the foreseeable future? All they can do is wait and hope that their balances will get paid sometime in the future. Many of them prefer not to wait, and are willing to accept cash now rather than the uncertain IOU they hold.

Now comes a Zambian exporter of, say, strawberries, who can use half of his/her foreign earnings anyway he or she pleases. The strawberry exporter offers a deal to the overseas creditor, call it the Koka-Loka Company for the sake of illustration. The strawberry exporter will pay cash in dollars to

Koka-Loka, say, 20 percent of the outstanding IOU it holds with the Bank of Zambia. In exchange, Koka-Loka transfers the IOU to the strawberry exporter.

The next step is for the strawberry exporter to approach the Bank of Zambia and suggests another deal: The strawberry exporter is willing to settle the full value of the IOU for the equivalent in kwacha at the official rate. The Bank of Zambia will be tempted to accept, since it can settle a debt in dollars, by the simple expedient of printing more Kwacha to pay the strawberry exporter. Since the official rate is used, there is no question about the legality of the transaction. For $1 million the strawberry exporter gets K 8 million, but recall that he only paid 20 percent or $200,000 for them, i.e., an exchange rate of 40:1.

The advantages of the red kwacha market are obvious. Koka-Loca is glad to get some cash now rather than promises for cash later. The strawberry exporter benefits by getting K 40 for each $1 of retention. The Bank of Zambia benefits by wiping out a debt in dollars, by paying it in kwacha at the cheap official rate. The country benefits from the reduction of its foreign debt. European consumers enjoy off-season strawberries.

Who loses? Koka-Loca, for one, has lost 80 percent of its IOU, but they had already lost hope of being paid fully anyway, so they aren't complaining. Also, if the Bank of Zambia simply prints kwachas to pay the debt, the additional money supply will contribute to inflation within Zambia. However, if the Bank merely reallocates funds from other government uses, the inflationary effect will not happen.

Who is Getting Red Kwachas?

The red kwacha market was, until now, a rather secretive market, each exporter guarding carefully the foreign creditors involved. The Bank of Zambia does not talk much about it either. It is, nonetheless, a perfectly legal market, insofar as we have learned.

Given the rather complicated nature of the trade in red kwachas and the need to make arrangements with unknown foreign creditors, access to this market has so far been limited to the larger exporters, and especially those with good links to financial centers in Europe or the United States. Foreign creditors would likely be large enterprises and banks who will not bother dealing in small amounts. Moreover, transfer of the IOU requires the consent of the Bank of Zambia, and this requires prolonged negotiations with the Bank and the Ministry of Finance. All these factors limit access to red kwacha for ordinary business people.

Each IOU transfer would normally be in the tens of thousands of dollars, perhaps even in the millions. It is possible to make open agreements for large debt transfers that are settled on an installment basis, i.e., a few tens of thousands of dollars at a time. Each case of debt transfer apparently is negotiated independently with the foreign creditor and the Bank of Zambia.

Since there are no standard rates, bargaining for the best deal is part of the routine.

We know of at least two exporters of agricultural commodities who take advantage of the red kwacha market, in both cases well-established and well-managed institutions. Both concerns have several open debt transfer agreements on which they make periodic payments.

It is conceivable that smaller exporters could participate under the umbrella agreements negotiated by larger outfits, if the smaller exporters were willing and able to transfer their green kwachas to the red market. It is not certain that the Bank of Zambia would be agreeable to such transfers.

Large investors are also reportedly interested in similar red kwacha agreements. A firm looking forward to establish a business in Zambia, or to purchase an ongoing concern, say, a large farm, would probably not find it attractive if the dollars invested are brought in at the official rate. Instead, the potential investor could purchase the same IOU held by Koka Loka against the Bank of Zambia at a suitable discount and then obtain the full value in red kwachas at the official rate. This arrangement is roughly equivalent to swapping debt for equity in the country, except that the owner of the equity is a different person.

Can ZAMS Also Play?

The ZAMS project is in a similar position to that of the above potential investor. The Government of the United States wishes to invest some U.S. dollars in raising the efficiency of the agricultural sector in Zambia, through a selective set of marketing improvements. Many of these improvement will be financed with kwachas transferred through the Bank of Zambia.

The impact of a given amount of ZAMS's dollars will depend greatly on the exchange rate used. Five times as much could be accomplished inside Zambia if the red kwacha rate could be used instead of the official rate. In fact, at the official rate, it is doubtful that many of the proposed market improvements would prove financially viable.

About half of the funds allocated for ZAMS are allocated for financing importation of inputs deemed essential to facilitate the marketing of agricultural products. Obviously, if these dollars are needed for imports, they cannot also be used for buying up debt. However, much of the other half of ZAMS will be brought into the country to finance projects in local currency. Those dollars could be used in the red kwacha market. These funds could amount to several million dollars, and for every million the issue is, should AID settle for K 8 million or insist on getting K 40 million as some private investors are getting?

Can USAID, being a U.S. government agency, engage in negotiations with the Zambian government about the exchange rate used to transfer aid funds? These are questions for lawyers and diplomats to answer. My understanding is that AID is required to use the highest legal rate available. So far, the

highest legal rate has been interpreted to mean the official rate. But as has been pointed out, the red market kwacha is perfectly legal as far as anyone can tell, and the Bank of Zambia and the Government of Zambia are already parties to similar agreements negotiated with private concerns. Moreover, since the official rate is, in fact, used to redeem the debt, the issue of the exchange rate does not even need to arise. Rather, the issue seems to be whether U.S. federal funds can be used to purchase private debt at a discount.

Among Zambia's many foreign creditors there are several American companies and banking institutions. Some of these institutions are likely to be willing to enter into red kwacha arrangements, especially if their forgone debt can be put to good use by the U.S. government. From their point of view, the red kwacha market is a form of private foreign aid to Zambia! The tax write-offs that they might derive would be an added incentive for them to make these concessionary arrangements. The challenge is therefore to find an appropriate mechanism to transfer their private foreign outstanding loans to USAID, its contractors, or the Zambian government for development purposes.

Steps Ahead

In order to pursue the prospects of using the red kwacha market to enhance the effect of ZAMS on the development of Zambia, several immediate tasks are ahead. First, some effort needs to be placed on identifying prospective private holders of Zambian debt in the United States. This information might be obtained in Lusaka, but more likely through the commercial banking system in the United States. Three different institutions have been mentioned as possible brokers for this and similar types of financial arrangements, namely, Equator Bank, Deloitte Haskins and Sell's, Citibank, and Citicorp International (London). Given the traditional economic links of Zambia with the United Kingdom, London financial institutions might be the best sources of information. Once prospective debt holders are identified, some discussions regarding the terms of possible settlements can be advanced. Currently, settlements on the order of 22 or 23 cents on the dollar are reported, and could serve as the basis for negotiations. However, final decisions must await the concurrence of the Zambian government.

Second, the Bank of Zambia and the Ministry of Finance might be approached early on about the need to channel some of the ZAMS funds through the red kwacha market (or the debt pipeline dismantling windows, as it is sometimes described). Their agreement seems to be conditional on the use of kwachas thus generated. In the case of the known exporters using the red kwachas, agreement was granted on the basis of their investing in agricultural development, particularly in the production of export generating items. Since ZAMS local currency will be used in promoting agricultural development and improving road and market infrastructure, USAID would stand on good grounds regarding the desirability of these expenditures.

One final note: A portion of ZAMS funds is allocated for imports of spare parts for transport vehicles and other agricultural production and marketing. Proceeds from the sale of these items in Zambia will also be used

for financing activities in agricultural marketing in the country. The price of these imports, therefore, should be as close to a market price as possible. AID, therefore, must be wary of suggestions to price these imports at cost using the official exchange rate. There are no price controls on spare parts and equipment, as far as we have learned. So, in principle, the issue of price controls on equipment imports will not arise. The importing institution, therefore, must be free to price these imports at commercially competitive prices.

ANNEX 5. SCOPE OF WORK

UNCLASSIFIED

Department of State

INCOMING TELEGRAM

ACTION AID-00

ACTION OFFICE S7RO-01
INFO AAAF-03 AFEA-03 AFSA-03 AFDP-05 AEDP-01 AFPD-04 SERT-01
AFTR-05 PDPA-01 PPPB-02 SEOG-02 BIFA-01 STAG-02 OPR-01
ZAST-01 AFPE-07 ES-01 AGRI-01 RELO-01 PRE-06 /053 A2 HL16

INFO LOG-00 AF-00 CIAE-00 EB-00 DODE-00 /000 W
----------005323 151415Z /64/38

P 151244Z MAR 88
FM AMEMBASSY LUSAKA
TO SECSTATE WASHDC PRIORITY 8979
INFO AMEMBASSY NAIROBI

UNCLAS LUSAKA 01182

AIDAC

AID/W, PLS. PASS TO S AND T/RD/ESE, R. BIGELOW, AFR/PD/SA, AND AFR/SA
NAIROBI FOR REDSO/ESA PROJECTS OFFICE

E.O. 12356:N/A
SUBJECT: ARIES SUPPORT IN STUDIES FOR PP DESIGN OF ZAMBIA AGRICULTURAL MARKETING SUPPORT PROJECT (ZAMS-611-0214); CONTRACT NO. DAN1089C 005124, ROBERT R. NATHAN ASSOCIATES

REF: (A) 87 STATE 32718 (B) LUSAKA 00693

1. THE PURPOSE OF THIS CABLE IS TO REQUEST THE ASSISTANCE OF S AND T/RD/ESE IN ISSUING A DELIVERY ORDER TO RNNA UNDER THE ARIES IQC. THE WORK ORDER WILL UNDERWRITE TWO STUDIES TO ASSIST IN THE DESIGN OF THE ZAMS PROJECT. IT IS IMPORTANT THAT THE STUDIES BE COMPLETED BEFORE A PP DESIGN TEAM BEGINS ITS WORK ON MAY 23, 1988. TO ACCOMMODATE THIS SCHEDULE, THE RNNA CONSULTANTS SHOULD ARRIVE IN ZAMBIA NLT APRIL 11. THEREFORE, WE ARE WORKING WITH A TIGHT TIME FRAME.

2. BACKGROUND ON THE PROJECT CONCEPT, AND SCOPES OF WORK FOR THE TWO STUDIES ARE PROVIDED BELOW. IT MIGHT ALSO BE HELPFUL TO REFER TO THE ZAMS PID FOR ADDITIONAL INFORMATION. COPIES OF THE PID CAN BE OBTAINED FROM AFR/PD/SA O/A MARCH 22.
3. ZAMS PROJECT CONCEPT. THE PROJECT GOAL IS TO INCREASE AGRICULTURAL PRODUCTION AND RURAL INCOMES THROUGH IMPROVEMENTS IN THE AGRICULTURAL MARKETING SYSTEM FOR BOTH OUTPUTS AND INPUTS. THE GOAL WILL BE ACHIEVED, IN PART, THROUGH THE PROVISION OF MORE MARKET OUTLETS, EXPANDED DEMAND THROUGH LOWER PRICES BROUGHT ABOUT BY REDUCED MARKETING COSTS, OR HIGHER PRICES FOR PRODUCERS, AND THROUGH IMPROVED MANAGEMENT OF THE INPUT DISTRIBUTION SYSTEM.

THE PROJECT PURPOSE IS TO IMPROVE THE OPERATIONAL EFFICIENCY OF THE AGRICULTURAL MARKETING SYSTEM IN ZAMBIA FOR SELECTED COMMODITIES, AND PROMOTE MARKET DEVELOPMENT AS NECESSARY. THIS WILL BE ACHIEVED BY IMPROVING THE EFFICIENCY OF THE HANDLING AND TRANSPORT FUNCTION, REDUCING MARKETING LOSSES THROUGH IMPROVED STORAGE AND PROCESSING FUNCTIONS, IMPLEMENTING GRADING AND STANDARDIZATION PROGRAMS FOR SELECTED COMMODITIES, AND IMPROVING THE MANAGERIAL AND TECHNICAL SKILLS OF THOSE ENGAGED IN AGRICULTURAL MARKETING.

THE PROJECT CONSISTS OF THREE BASIC COMPONENTS; TA, TRAINING AND COMMODITIES. THE THREE COMPONENTS WILL

BE DIRECTED PRIMARILY TOWARD THE PRIVATE SECTOR. HOWEVER, LIMITED TA AND TRAINING MAY ALSO BE PROVIDED TO THE PUBLIC SECTOR. THE COMMODITIES, PRIMARILY FOR THE PRIVATE SECTOR, WILL GENERATE COUNTERPART (C/P) FUNDS WHICH WILL BE JOINTLY PROGRAMMED BY THE MISSION AND THE GRZ TO ENHANCE THE TA AND TRAINING PORTIONS OF THE PROJECT, AND TO PROVIDE SUPPORT FOR INFRASTRUCTURE DEVELOPMENT NEEDED TO ACHIEVE THE PROJECT PURPOSE.

THE FOCUS OF THE ZAMS PROJECT WILL BE ON THE MARKETING FUNCTIONS OF TRANSPORTATION, STORAGE, PROCESSING, AND GRADES AND STANDARDS. INITIALLY, THE PROJECT WILL FOCUS ON OILSEEDS (E.G., SUNFLOWERS, SOYBEANS AND COTTONSEED), AND THEN EXPAND TO MILLET, SORGHUM AND CASSAVA, AND FRESH FRUITS AND VEGETABLES. ALL OF THESE COMMODITIES WOULD BE FOR THE DOMESTIC MARKET. AS THE PROJECT PROGRESSES, AND AS GRZ POLICIES CHANGE, IT MAY BE DESIRABLE TO FURTHER EXPAND THE LIST OF COMMODITIES AND TO INCLUDE THE EXPORT MARKET FOR SELECTED COMMODITIES. IT IS ALSO POSSIBLE THAT THE PP TEAM, AFTER FURTHER REVIEW AND STUDIES HAVE BEEN DONE, MAY DECIDE TO RESTRICT THE FUNCTIONS AND COMMODITIES EVEN FURTHER THAN IS CONTAINED IN THE PID.

THEREFORE, ONE OF THE MOST SIGNIFICANT DESIGN ISSUES FOR THE PP TEAM WILL BE TO: MAKE THE FINAL DETERMINATION AS TO WHAT AGRICULTURAL COMMODITIES AND LOCAL INSTITUTIONS TO SUPPORT; DETERMINE THE PROPER SEQUENCING FOR UNDERTAKING THIS SUPPORT; AND ESTABLISH WHICH OF THE FOUR IDENTIFIED MARKETING FUNCTIONS SHOULD RECEIVE PRIORITY ATTENTION FOR EACH COMMODITY. THE STUDIES REQUESTED PRIOR TO THE PP DESIGN WILL ASSIST THE PP TEAM IN MAKING THESE JUDGMENTS.
4. SCOPE OF WORK

A. OBJECTIVE. THE OBJECTIVE OF THE ASSISTANCE BEING REQUESTED FROM THE ARIES PROJECT IS TO PROVIDE THE PP TEAM WITH SUFFICIENT INFORMATION TO MAKE AN INFORMED CHOICE CONCERNING THE SPECIFIC AGRICULTURAL COMMODITIES, MARKETING FUNCTIONS, INSTITUTIONS AND /OR GEOGRAPHICAL REGIONS ON WHICH ZAMS SHOULD FOCUS, AND IN WHICH SEQUENCE. A STUDY UNDERTAKEN FOR USAID/ZAMBIA ON THE OIL SEED SECTOR IS ALREADY AVAILABLE, AND CAN BE USED AS AN ADDITIONAL RESOURCE REGARDING MARKETING FOR THIS SECTOR.

B. TASKS.

(1) TO CARRY OUT A STUDY OF FRESH FRUITS AND VEGETABLES MARKETING IN ZAMBIA. THE STUDY WILL:

(A) PROVIDE A DATA BASE ON THE PRODUCTION, MARKETING AND PROCESSING OF FRESH FRUITS AND VEGETABLES FOR THE DOMESTIC MARKET. THIS WILL INCLUDE DETERMINING THE FOLLOWING:

- NUMBER, SIZE, AND LOCATION OF FRESH FRUITS AND
- VEGETABLE PRODUCERS SUPPLYING SIGNIFICANT
- POPULATION CENTERS AND PROCESSORS;

- NUMBER, SIZE, GENDER, "CLASS," AND LOCATION OF
- FIRMS OR INDIVIDUALS ENGAGED IN THE MARKETING OF
- FRESH FRUITS AND VEGETABLES TO SIGNIFICANT
- POPULATION CENTERS OR PROCESSORS;

- NUMBER, SIZE AND LOCATION OF SIGNIFICANT

UNCLASSIFIED

3/8

Department of State

INCOMING TELEGRAM

- PROCESSORS OF FRESH FRUITS AND VEGETABLES; AND

- THE TYPE OF PROCESSING PRESENTLY AVAILABLE.

(B) IDENTIFY THE MAJOR CONSTRAINTS IN TRANSPORTATION, STORAGE, PROCESSING, AND GRADES AND STANDARDS FACED BY THE MARKETING AND PROCESSING FIRMS IN THE FRESH FRUITS AND VEGETABLES SUBSECTOR.

(C) IDENTIFY THE TYPE AND KIND OF ASSISTANCE THAT USAID APPEARS TO BE BEST QUALIFIED, IN THE CONTEXT OF THE PROPOSED ZAMS PROJECT AND PROGRAMS OF OTHER DONORS, TO SUPPLY TO OVERCOME THOSE CONSTRAINTS. THE THREE ABOVE SUBTASKS WILL BE ACCOMPLISHED THROUGH:

- REVIEWING SECONDARY INFORMATION;

- HOLDING INTERVIEWS WITH INDIVIDUALS INVOLVED WITH
- THE FRESH FRUITS AND VEGETABLES SUBSECTOR; AND

- CARRYING OUT FIELD OR ON-SITE VISITS TO VERIFY
- INFORMATION GAINED FROM OTHER SOURCES.

(2) TO CARRY OUT A SECOND STUDY OF MARKETING FOR MINOR FIELD CROPS (MILLET, SORGHUM, AND CASSAVA). THE STUDY WILL:

(A) PROVIDE A DATA BASE ON THE PRODUCTION, MARKETING AND PROCESSING OF MILLET, SORGHUM, AND CASSAVA FOR THE DOMESTIC MARKET. THIS WILL INCLUDE DETERMINING THE FOLLOWING:

- NUMBER, SIZE, AND LOCATION OF MAJOR PRODUCTION
- AREAS OF MILLET, SORGHUM, AND CASSAVA;

- NUMBER, SIZE, GENDER, "CLASS," AND LOCATION OF FIRMS OR INDIVIDUALS ENGAGED IN THE MARKETING OF MILLET, SORGHUM, AND CASSAVA;

- NUMBER, SIZE AND LOCATION OF PROCESSORS OF
- MILLET, SORGHUM, AND CASSAVA;
- THE TYPE OF PROCESSING PRESENTLY AVAILABLE FOR
- EACH OF THE COMMODITIES.

(B) IDENTIFY THE MAJOR CONSTRAINTS IN TRANSPORT, STORAGE, PROCESSING, AND GRADES AND STANDARDS FACED BY THE MARKETING AND PROCESSING FIRMS IN THE MINOR FIELD CROPS SUBSECTOR.

(C) IDENTIFY THE TYPE AND KIND OF ASSISTANCE THAT USAID APPEARS TO BE BEST QUALIFIED TO SUPPLY TO OVERCOME THE CONSTRAINTS.

THE THREE ABOVE SUBTASKS WILL BE ACCOMPLISHED BY:

- REVIEWING SECONDARY INFORMATION;

- HOLDING INTERVIEWS WITH INDIVIDUALS INVOLVED WITH
- THE MINOR FIELD CROPS SUBSECTOR; AND

- CARRYING OUT FIELD OR ON-SITE VISITS TO VERIFY
- INFORMATION GAINED FROM OTHER SOURCES.

C. REPORTS AND DELIVERABLES.

THE CONSULTANTS WILL PROVIDE TO THE USAID/ZAMBIA MISSION DIRECTOR NO LATER THAN MAY 9, 1988 ONE TYPEWRITTEN, DOUBLE-SPACED DRAFT OF EACH STUDY. ONE REPORT WILL CONTAIN THE DATA, BACKGROUND INFORMATION, AND RECOMMENDATIONS CALLED FOR UNDER TASK 1, MARKETING OF FRUITS AND VEGETABLES. THE SECOND

REPORT WILL CONTAIN THE DATA, BACKGROUND INFORMATION, AND RECOMMENDATIONS CALLED FOR UNDER TASK 2, MARKETING OF MINOR FIELD CROPS, MILLET, SORGHUM, AND CASSAVA.

THE CONSULTANTS WILL PROVIDE TO THE USAID/ZAMBIA MISSION DIRECTOR NO LATER THAN MAY 16, 1988 A TYPEWRITTEN, SINGLE-SPACED FINAL VERSION OF EACH REPORT, BOTH OF WHICH INCORPORATES THE COMMENTS AND SUGGESTIONS USAID/ZAMBIA MADE ON PREVIOUS DRAFTS. THESE TWO REPORTS WILL BE SUBMITTED IN FINAL BEFORE THE CONSULTANTS DEPART ZAMBIA. BEFORE DEPARTING ZAMBIA, THE CONSULTANTS WILL ALSO PROVIDE USAID/ZAMBIA WITH 5.25 INCH COMPUTER DISKS (2) CONTAINING THE TEXT AND TABLES OF THE ABOVE MENTIONED REPORTS.

D. PERSONNEL.

IT IS ESSENTIAL THAT EACH CONSULTANT BE FLUENT IN THE ENGLISH LANGUAGE, HAVE PROFESSIONAL ACADEMIC TRAINING AT THE MASTERS LEVEL OR ABOVE IN AGRICULTURAL ECONOMICS, MARKETING, OR A RELATED FIELD, BE FULLY PROFICIENT IN THE USE OF WORD PROCESSING AND OTHER RELEVANT COMPUTER PROGRAMS, HAVE CONSIDERABLE EXPERIENCE WORKING IN AFRICAN COUNTRIES (PREFERABLY IN AGRICULTURAL MARKETING WITH THE PRIVATE SECTOR), AND HAVE FAMILIARITY WITH A.I.D.'S POLICIES, PROCEDURES AND CAPABILITIES.

IT IS HIGHLY DESIRABLE, THOUGH NOT ESSENTIAL, THAT EACH CONSULTANT HAVE PRIOR EXPERIENCE IN ZAMBIA, AND HAVE CONDUCTED PREVIOUS ANALYSIS OF AGRICULTURAL PRICING AND MARKETING ISSUES FOR FROM WHICH THE ZAMS PROJECT WILL POTENTIALLY FORM UPON.

IT WILL NOT BE NECESSARY FOR THE CONSULTANTS TO HAVE ACCESS TO CLASSIFIED INFORMATION.

THE WORK PROPOSED WILL REQUIRE THE SERVICES OF TWO CONSULTANTS. THE CONSULTANTS SHOULD INDIVIDUALLY DEVOTE NO LESS THAN FOUR WEEKS FOR SUBSTANTIVE WORK IN ZAMBIA, IN ADDITION TO UP TO FIVE WORKING DAYS FOR INITIAL BRIEFING (NOT TO EXCEED ONE DAY IN AID/W) AND PREPARATION OF A TEAM WORK PLAN.

E. ROLES AND RESPONSIBILITIES

THE CONSULTANTS WILL WORK UNDER THE OVERALL GUIDANCE OF THE MISSION DIRECTOR, OR THE ASSISTANT DIRECTOR, ACTING ON HIS BEHALF. THE CONSULTANTS WILL RECEIVE DAY TO DAY DIRECTION FROM THE MISSION'S AGRICULTURAL ECONOMICS OFFICER. THE AGRICULTURAL ASSISTANT AND THE AGRICULTURAL ECONOMICS ASSISTANT WILL BE ASSIGNED TO THE TEAM FOR THE PERIOD IN WHICH THE TEAM CONDUCTS ITS WORK IN ZAMBIA. THE MISSION'S PROJECT DEVELOPMENT OFFICER WILL ALSO BE AVAILABLE TO GUIDE THE LINES OF INQUIRY AND DATA COLLECTION.

ONE OF THE TWO CONSULTANTS WILL BE DESIGNATED AS TEAM LEADER TO SPEAK ON THE TEAM'S BEHALF, AND SERVE AS THE CONSULTANT WITH OVERALL RESPONSIBILITY FOR THE QUALITY OF THE TEAM'S WORK PRODUCT.

IN ORDER TO FACILITATE THE COLLECTION OF DATA AND ASSIST WITH OTHER ASPECTS IN PREPARING THESE TWO STUDIES, USAID/ZAMBIA WILL CONTRACT WITH LOCAL FIRMS (USING COUNTERPART FUNDS) TO SUPPORT THE STUDIES TO BE CARRIED OUT BY THE U.S. CONSULTANTS. THE LOCALLY CONTRACTED CONSULTANTS WILL WORK UNDER THE GUIDANCE AND SUPERVISION OF THE TWO AMES CONSULTANTS.

UNCLASSIFIED

UNCLASSIFIED

Department of State

INCOMING TELEGRAM

THE ARIES CONSULTANTS WILL BE RESPONSIBLE FOR:

1) MANAGING THE OVERALL PROCESS OF INFORMATION AND DATA COLLECTION;

2) MAKING SELECTED SITE VISITS TO DETERMINE THE QUALITY AND ACCURACY OF THE INFORMATION AND DATA BEING COLLECTED;

3) PARTICIPATING TO THE FULLEST EXTENT POSSIBLE IN INTERVIEWS AND FIELD VISITS;
4) PROVIDING A UNIFORM REPORTING AND WRITING FORMAT FOR THE TEAM;

5) WITH ASSISTANCE FROM THE ZAMBIAN CONSULTANTS, DRAFTING THE TWO REPORTS.

6) PROVIDING USAID/ZAMBIA WITH 5.25 INCH COMPUTER DISCS (S) CONTAINING THE TEXT AND TABLES OF THE ABOVE MENTIONED REPORTS. THE DISKS MUST BE COMPATIBLE WITH WANG PC EQUIPMENT.

F. LOGISTICS.

USAID/ZAMBIA WILL PROVIDE HOTEL RESERVATIONS, TRANSPORTATION TO FIELD SITES, OFFICE SPACE, SECRETARIAL SUPPORT, OFFICE SUPPLIES, AND FOR THE TWO ARIES CONSULTANTS, COMMISSARY PRIVILEGES. THE MISSION HAS TWO WANG PC'S, WITH WANG WORD PROCESSING AND LOTUS, WHICH CAN BE MADE AVAILABLE TO THE CONSULTING TEAM. THE WANGS ARE IBM COMPATIBLE. IF THE TEAM WISHES TO BRING PERSONAL COMPUTERS, THE COMPUTERS MUST BE COMPATIBLE WITH THE MISSION'S WANG PC'S.

G. LEVEL OF EFFORT.

IT IS ESTIMATED THAT EACH CONSULTANT WILL BE REQUIRED TO DEVOTE NO LESS THAN 30 PERSON DAYS (NOT INCLUDING HOLIDAYS AND WEEKENDS) TO PERFORM THE WORK REQUIRED. A SIX-DAY WORK WEEK SHOULD BE AUTHORIZED.
IT IS ANTICIPATED THAT ONE OF THE CONSULTANTS SELECTED FOR THE WORK DESCRIBED ABOVE WILL BE REQUIRED TO SERVE ON THE PP DESIGN TEAM. THUS, THE POSSIBILITY OF A FOLLOW-ON TO THE IQC DELIVERY ORDER FOR ONE CONSULTANT IS REQUESTED. THE PP DESIGN TEAM IS SCHEDULED TO BEGIN ITS WORK ON MAY 23, 1988. THE PP IS SCHEDULED TO BE COMPLETED BY JULY 15, 1988.

H. BUDGETARY AND FISCAL DATA.

IT IS ANTICIPATED THAT SUFFICIENT PM AND R FUNDS ARE AVAILABLE TO COVER THE COSTS OF THE CONSULTANT TEAM IN PREPARING THE TWO STUDIES. THESE FUNDS HAVE ALREADY BEEN OBLIGATED FOR AN ARIES PROJECT BUY-IN PER REF A. ADDITIONAL FUNDING MAY BE REQUIRED TO UNDERWRITE THE COSTS OF AN EXTENSION FOR ONE CONSULTANT TO SERVE ON THE PP DESIGN TEAM. USAID/ZAMBIA SHOULD BE ADVISED BY AID/W IF ADDITIONAL FUNDS WILL BE REQUIRED FOR SUCH AN EXTENSION, AND THE AMOUNT, ONCE THE COSTS OF THE WORK ORDER HAVE BEEN NEGOTIATED WITH THE IQC FIRM (BRMA). IT IS THE MISSION'S DESIRE THAT ALL IN-COUNTRY COSTS FOR THE CONSULTANCY BE COVERED THROUGH THE USE OF COUNTERPART FUNDS.

FUNDING SITES FOR THE IQC DELIVERY ORDER ARE AS FOLLOWS:

PIO/T NO.: 698-0288.13-3-73016
APPROPRIATION NO.: 72-1171/81293
BUDGET PLAN CODE: CBZF-87-21611-KG16
AMOUNT OBLIGATED: DOLLARS 28,672

NMC

UNCLASSIFIED

agmmark

AGRICULTURAL MANAGEMENT, MANPOWER AND MARKETING

SUPPLEMENTARY ANNEX 3

88 Horseferry Road,
London SW1 2EE
Telephone: (01) 222 - 8626/1992
Telex: 912021 SABLE G

Zambia Office,
P.O. Box 36281,
LUSAKA.
Telephone: 210702
Telex: ZA 43266

USAID/ZAMBIA

ZAMS PROJECT

INSTITUTIONAL ANALYSIS OF AGRICULTURAL MARKETING FIRMS IN ZAMBIA

Lusaka
June 1988

321

USAID/ZAMBIA

ZAMS PROJECT

INSTITUTIONAL ANALYSIS OF AGRICULTURAL MARKETING CONSULTING FIRMS IN ZAMBIA

A. INTRODUCTION

This report has been prepared in response to a request by USAID/Zambia to undertake a brief review of consulting capabilities within Zambia which would be in a position to assist USAID in the implementation of the ZAMS Project. The Terms of Reference for the Study are contained in Appendix 1.

The report is divided into three sections:

Section A - Introduction
Section B - Conclusions
Section C - Resumes of all firms reviewed

Comments on the Terms of Reference
Although the Terms of Reference specify only firms providing 'agricultural management consulting services in Zambia', the Contractors felt that these terms were too restrictive in respect of agricultural marketing as a whole. They have, therefore, included firms which have other primary functions such as accounting and auditing, finance and engineering. In addition institutions which would be is a position to assist in the general aims of the ZAMS Project have been included.

Under the 'Objective and Scope of Work' an analysis is required of the strengths, capabilities and weaknesses of the firms reviewed. As the number and type of companies has been increased from those originally envisaged, as mentioned in the paragraph above, detailed analysis has been limited, by constraint of time, to comparing like firms eg. engineers with engineers. Information pertaining to each company has been set out in a standard format for ease of comparison between companies offering the same services. In Section B 'Conclusions', firms within these categories are compared.

Fieldwork Methodology
A list of potential consultants was compiled in conjunction with USAID and all the consultants offices were visited, where the officer in charge of consulting services was interviewed. In as many cases as possible the company brochure was obtained and these have been catalogued and forwarded to USAID with this report. These brochures generally include details of specific Projects carried out by the firms both in Zambia and elsewhere. This detail has therefore been omitted from the company resumes given in Section C of this report although, where relevant, this information has been broadly outlined in relation to Zambia in Section B.

32

The organisations contacted during the course of this study fell into 4 broad categories:

Agricultural consulting firms
Accounting and audit, and Finance firms
Civil Engineering consulting firms
Service institutions

Of the 21 companies/institutions contacted only one, Landell Mills, declined to give the contractors the information required to compile this report but contacted USAID directly. The detail of Landell Mills included in Section C of this report is derived from the company brochure, as handed on to the contractors by the consultants, plus information gathered from the discussions held between the consultants and the representative of Landell Mills.

In Section C of this report each firm has been reviewed under the folowing headings:

1. Type of Organisation
2. Nationality of parent
3. Officer responsible for consulting services
4. Resident consulting staff in Zambia
5. Area of consulting specialisation
6. Association with other firms
7. Experience in provision of marketing (marketing related) advisory services
8. Analysis of management and implementation capabilities.

Most of the above headings are self explanatory. However, the following definitions will assist in clarrifying the meaning of comments included.

2. Nationality of parent
For a number of companies, especially franchised partnerships, it was not easy to identify the nationality of the parent company. Under the franchising agreements these companies are, in effect, Zambian, although they have a strong affiliation to non-Zambian multi-national 'parents'

4. Resident consulting staff in Zambia
Under this category the report lists only those staff who would be available on a short/medium term basis to participate in the ZAMS Project. It does not include staff seconded by the company's foreign parent to permanent employed positions in Zambia.

8. Analysis of management and implementaion tasks
The majority of firms with an international base have recourse to all the requirements of the ZAMS Project as set out in the Terms of Reference but very few have these facilities within the country. In analysing these capabilities the report specifies the most likely geographic location of the source of these services.

323

B. CONCLUSION

In this section of the report firms offering similar services have been contrasted and compared and service institutions are briefly described. A qualitative analysis of the information gathered during the course of the fieldwork was difficult given the limited time available. However, an attempt has been made to highlight the most important capabilities of each of the consulting firms reviewed. These are presented by mainstream activity groups in the following order:

1. Agriculture
2. Accounting, audit and finance
3. Engineering
4. Service institutions

For all groups, the quality of services provided by consulting firms is largely the product of the quality of the individual consultants within the firm. In many cases the firms themselves had not undertaken specific activities but staff, currently within the firm, did have the relevant experience. In these cases, the experience has been acknowledged as part of the firms current capability.

Agricultural Consulting Firms

Five agricultural consulting firms based in Zambia were interviewed as follows:

AIM Consulting Ltd
AGMMARK Zambia Ltd
Landell Mills Associates
MASDAR Zambia Ltd
Development Research Centre of Zambia (DRCZ)

AIM and DRCZ are majority owned Zambian firms whilst the remainder are majority foreign owned. Landell Mills has been working in Zambia longer than all the other firms, followed by AIM, AGMMARK, MASDAR and DRCZ in that order. Apart from MASDAR, all the firms originated in Zambia and, of these, all but DRCZ were the products of founders who were farming residents in Zambia prior to independence.

AIM was originally established to provide in-house consulting services to its Directors who operated large commercial farms (mainly beef) in Zambia. It has only recently begun offering these services to a wider clientel and its expertise tends to reflect the requirements of its earlier role. AIM has 3 permanent consulting staff resident in Zambia.

324

AGMMARK was established in 1984 simultaneously in Zambia and the UK. Two of the three major shareholders are Zambian by origin, hence the selection of Zambia as the headquarters of its African operations. The original concept of the firm was not merely to provide consulting services but to identify and implement market led agricultural projects. This strategy has subsequently been reflected in the composition of its staff with a strong planning, financing and marketing capability, the majority of whom (7 consultants) are Zambian based. AGMMARK is best known in Zambia for its planning of Projects with innovative financing and its marketing capability.

Landell Mills is the longest established non-Zambian agricultural consulting firm and has undergone the greatest change since its foundation. Established in UK in 1975 by two individuals who had experience of Zambia, the firm went public in 1986 and is understood to have been bought out recently by a consortium which included USA financing. In Zambia, Landell Mills, is best known for its provision of technical assistance to international agencies, and investment in and management of large scale commercial agricultural enterprises. It does not appear to have any full time consultants resident in Zambia.

MASDAR was established in the mid 70s and, until recently, has been most active in West Africa, specialising in the provision of Technical Assistance staff, and in training services. Of all the firms present in Zambia this is probably the most opportunistic, capable of changing its colour to suit any occasion. However, its core technical staff are generally extremely highly regarded in their fields. In Zambia, they are best known for their provision of technical assistance staff to the IRDP in Mpika. MASDAR has no full time consultants resident in Zambia.

DRCZ is an embryonic organisation which was formed in response to the need for a commercially oriented planning group utilising locally available skills, mainly from the public sector. To date no permanent office has been established and no permanent staff are employed. However, using consultant services from their roster (25 consultants), the group has carried out two recent assignments for international agencies. It is their intention to establish permanent offices and employ technical and support staff in the near future.

2. Accounting, Audit and Financing Firms

The representatives of five major, and one minor locally based accounting, audit and financing firms with consulting capabilities based were interviewed as follows:

Coopers and Lybrand Associates
Deloitte, Haskins and Sells
Peat Marwick
Price Waterhouse

325

Equator Advisory Services

Bitz Credit, Finance and Trade Ltd.

Coopers and Lybrand and Deloitte, Haskins and Sells both have permanent consulting staff resident in Zambia mainly in the accounting, organisation and management and data processing fields. In addition, Deloittes and Price Waterhouse have large regional consulting offices based in Nairobi offering a broader spectrum of consulting services including agriculture and agricultural marketing. All the major accounting firms also have large consulting capabilities based in their country(s) of origin.

Equator Advisory Services (EAS) have two permanent consultants resident in Lusaka, neither of whom specialises in the agricultural sector. EAS is best known in Zambia for 'financial engineering' to support large commercial enterprises including agricultural schemes, and the provision of technical assistance. Their exposure to agricultural marketing advice is restricted to specific project production. They have a large pool of available consultants, particularly in the USA.

Bitz Credit, Finance and Trade Ltd is a newly established Zambian firm with 2 consultants specialising in trade and finance. They have done some market research in the agricultural sector particularly within the PTA region.

3. Engineering Consulting Firms

Representatives of six Zambian based engineering consultants were interviewed as follows:

Arup Zambia Ltd
Brian Colquhoun Hugh O'Donnel and Partners Zambia
John Burrow and Partners Ltd
Nicholas O'Dwyer and Partners Zambia
ZMCK Consulting Engineers
Lummus Agricultural Service Co (LASCO)

Of all the engineering firms from which information was gathered, only ZMCK is majority Zambian owned. Apart from LASCO, none of the firms have any degree of specialisation and all offer almost identical, but comprehensive, services with significant numbers of resident consulting engineers of international standard. Where engineers with specific skills may not be available in Zambia all these firms have other offices within the region from which additional personnel are available. In addition, with the exception of ZMCK, they all have large Europe based head offices providing very specialised skills.

326

LASCO, on the other hand, is a recently formed majority US owned company which was established initially to exploit the experience gained by its employees on the Gwembe Valley Project. It no longer, however, confines its activities to the agricultural sector and offers similar services to all other consulting engineering firms.

4. Institutions

Representatives of four institutions within the agricultural sector were interviewed as follows:

Commercial Farmers Bureau (CFB)
Zambia Export Growers Association (ZEGA)
Rural Development Studies Bureau (RDSB)
Africa Project Development Facility (APDF)

The CFB represents the interests of 1500 commercial and emergent farmers who are its members. They have no internal consulting capability but have a comprehensive data base and their members with specialist skills are available for consultation. CFB is influential within the agricultural sector and any programme which may include its members would benefit from CFB support.

ZEGA is a small organisation which represents the interests of its 100 members, who are generally involved in agricultural exports. They have no permanent consultants but can call on the services of members where relevant. Currently, their main functions are to co-ordinate air and overland freight space, to bulk procure inputs and to lobby Government on behalf of their members.

RDSB is a department of the University of Zambia whose main function is to provide consulting services for the public and aid sectors. Like most Government funded institutions they suffer from insufficient funding and tend to view development through the same eyes as Government. They have a core of 7 consultants in a variety of specialisations whose effectiveness is impeded by lack of transport and support facilities. The Director of RDSB would like to be in a position to compete with commercial companies to provide developmental services, by charging commercial rates in order to support the bureau, but this does not fall within the realms of current Government thinking.

APDF is a Nairobi based IFC-supported facility aimed at providing the foreign exchange element of consulting services for emergent and established African businesspersons who wish to establish or expand a commercial venture and which requires a Feasibility Study to attract funding/loans. APDF is known to seek joint funding for specific projects with other like-minded agencies and institutions. It will also put its clients in touch with prospective institutional investors. It is APDF policy to use local consultants to carry out Feasibility Studies wherever possible.

327

SECTION C

Resume of Firms visited during the course of field work

1. Agricultural Consulting Firms

Agricultural and Industrial Management (AIM) Ltd
AGMMARK Zambia Ltd
Landell Mills Associates
MASDAR Zambia Ltd
Development Research Centre of Zambia

2. Accounting, Audit and Finance Consulting Firms

Coopers and Lybrand Associates
Deloitte Haskins and Sells
Peat Marwick
Price Waterhouse

Equator Advisory Services

Bitz Credit Finance and Trade Ltd

3. Engineering Consulting Firms

Arup Zambia Ltd
Brian Colquhoun Hugh O'Donnel and Partners Zambia
John Burrow and Partners Zambia
Nicholas O'Dwyer and Partners Zambia
ZMCK Consulting Engineers
Lummus Agricultural Services Co Ltd (LASCO)

4. Service Institutions

Commercial Farmers Bureau
Zambia Export Growers Association
Rural Development Studies Bureau
Africa Projects Development Facility

328

Agricultural and Industrial Management (AIM) Consultancy Ltd
Grand House
Cairo Road
P.O Box 30163
Lusaka

Tel: 214464
Tlx: 42850

Type of organisation:
Agricultural consulting and advisory services in the public and private sector.

Nationality of parent:
Zambian

Officer responsible for consulting services:
Mr J.P. Bwalya

Resident Consulting staff in Zambia:
2 Economists
1 Livestock specialist

Area of consulting specialisation:
Technical and economic assessment, planning and management of agriculturally related resources: marketing and promotion of exports: implementation and monitoring of support programmes covering agricultural extension, credit and research.

Association with other firms:
Strong link with Galaun Holdings Ltd (its parent company) and Galaunia Farms (Private) Ltd from which additional consulting expertise can be called on through agricultural staff employed on company farms. For other services no formal links exist with other consulting firms. Any linkage is for particular undertaking.

Experience in provision of marketing advisory services in the agricultural sector:
Generally limited to the products of Galaun farms where the expertise is strong particularly in beef and horticultural production.

Analysis of project management and implementation tasks in the agricultural sector:

Provision of technical assistance	- limited
Commodity procurement	- good in Zambia
Training	- none
Project supervision	- limited

329

AGMMARK (Zambia) Ltd
Kulenga Farm
Leopards Hill Road
and
IAL Building
Maunda Road
P.O. Box 36281
Lusaka

Tel: 210702/217020
Tlx: 42360

Type of organisation:
UK and Zambian based agricultural consulting, management, marketing and financing company.

Nationality of parent:
British.

Officer responsible for consulting services:
Mr P.D. Fleming

Resident Consulting staff in Zambia:
1 Agronomist/Planner
1 Agricultural Economist
1 Project Finance specialist
1 Horticulturalist
1 Farm Management/Production Supervision
1 Transport/Marketing specialist

Area of consulting specialisation:
The identification of commodity markets: the creation of agricultural projects to satisfy the markets and the financing and management of the projects. In addition, the provision of specialist consulting services and management in the institutional 'aid' sector.

Association with other firms:
No formal linkages with other consulting firms but, in Zambia, the company works closely with Deloitte, Haskin and Sells and with John Burrow and Partners (Consulting engineers).

Experience in provision of marketing advisory services in the agricultural sector:
Extensive.

Analysis of project management and implementation tasks in the agricultural sector:

Provision of technical assistance	- good in Zambia
Commodity procurement	- good in Zambia
Training	- limited
Project supervision	- good in Zambia

330

Landell Mills Associates
1 Chaholi Road
P.O. Box 33000
Lusaka

Tel: 252424
Tlx:

Type of organisation:
UK based agricultural consulting, management and marketing company.

Nationality of parent:
Landell Mills does not appear to be Zambian registered but a branch of a British company.

Officer responsible for consulting services:
Mr M Mfula

Resident consulting staff in Zambia:
None

Area of consulting specialisation:
World wide the company offers a wide range of consulting services. In Zambia the company's activities are currently confined to provision of technical assistance staff and the management of large scale commercial agricultural enterprises.

Association with other firms:
Not known

Experience in provision of marketing advisory services in the agricultural sector:
Believed to be very good from UK.

Analysis of project management and implementation tasks in the agricultural sector:

Provision of technical assistance	-	good from UK
Commodity procurement	-	good from UK
Training	-	good from UK
Project supervision	-	good from UK

331

MASDAR (Zambia) Ltd
1st Floor. Permanent House
Cairo Road
P.O. Box 31653
Lusaka

Tel: 216678/211441
Tlx: 41530

Type of organisation:
UK and Zambian based agricultural consultancy firm with management and training specialisation.

Nationality of parent:
British.

Officer responsible for consulting services:
Mr J Vlahakis.

Resident consulting staff in Zambia:
None.

Area of consulting specialisation:
Agricultural project design, management and training in the public and private sectors.

Association with other firms:
In Zambia currently undertaking management of ODA IRDP in Mpika in conjunction with Price Waterhouse. Apart from that no formal link with any other consulting firms.

Experience with the provision of marketing advisory services in the agricultural sector:
None.

Analysis of project management and implementation tasks in the agricultural sector:

Provision of technical assistance	-	good from UK
Commodity procurement	-	limited
Training	-	good from UK
Project supervision	-	good from UK

Development Research Centre of Zambia
P.O. Box 310212
Lusaka

Tel: 216287
Tlx:

Type of organisation:
Agricultural consultancy firm

Nationality of parent:
Zambian

Officer responsible for consulting services:
Dr J Temba

Resident consulting staff in Zambia:
Around 25 in many disciplines - mostly personnel currently employed within the Civil Service or at the University of Zambia.

Area of consulting specialisation:
Agricultural project design, survey work in the public and private sectors.

Association with other firms:
No formal links with any other firms/institutions.

Experience with the provision of marketing advisory services in the agricultural sector:
None.

Analysis of project management and implementation tasks in the agricultural sector:

Provision of technical assistance	-	good from Zambia
Commodity procurement	-	none
Training	-	good from Zambia
Project supervision	-	good from Zambia

The Development Research Centre of Zambia has only recently been established and is seeking to employ 4 full time consulting staff who would be able to call upon a rosta of consultants (25 registered to date). Many of the consultants are currently in the full time employment of various Government Ministries/ Parastatals and Institutions but should there be sufficient demand for their services within the private sector they would be willing to move out of the public sector.

Coopers and Lybrand Associates
Permanent House
Cairo Road
P.O. Box 30855
Lusaka

Tel 211441
Tlx 41530

Type of organisation:
International accounting and audit firm with consulting capability. Franchised partnership.

Nationality of parent:
Generally considered to be British.

Officer responsible for consulting services:
Mr M.P. Cronin

Resident consulting staff in Zambia:
2 Finance specialists
1 Financial systems specialists
1 Computer systems specialist
1 Technical data processing specialist
1 Marketing/Economics/Public Sector specialist
1 Organisation and Management specialist

Area of consulting specialisation:
Financial investigation including economic and marketing information for public and private sector clients. Manpower and organisational studies and the design and management of surveys (conducted recently with UNZA) for large private and public companies and institutions. Generally no contact with emergent and smallholder farmers.

Association with other firms:
No formal associations but link up with appropriate consulting firms from time to time depending on the circumstances of the work. A more formal relationship exists between the parent company in UK and the agricultural consulting firm Minster Agriculture which is not represented in Zambia.

Experience in provision of marketing advisory services in the agricultural sector:
None

Analysis of project management and implementation tasks in the agricultural sector:

Provision of technical assistance	- none
Commodity procurement	- limited
Training	- good from Zambia
Project supervision	- none

Deloitte Haskins and Sells
Kafue House 2nd Floor
1 Nairobi Place
P.O. Box 30030
Lusaka

Tel: 215355
Tlx: 43490

Type of organisation:
International accounting and audit firm with consulting capability. Franchised partnership.

Nationality of parent:
Generally considered to be American or British.

Officer responsible for consulting services:
T. Meighan/C. Jenkins

Resident consulting staff in Zambia:
1 Snr Accounting/Management Information specialist
1 Snr Organisation and Management specialist
1 Jnr Accounting/Management Information specialist
1 Jnr Organisation and Management specialist
2 Data Processing specialists

Area of consulting specialisation:
Within the capability of locally based staff work is concentrated on manpower and organisational studies for commerce and agriculture in the public and private sectors. Also involved in pipeline debt dismantling for financing projects/commodity price support. A regional nucleus of around 25 consulting staff maintained in Nairobi allows a wide range of consulting activities to be undertaken including all aspects of agricultural economics, marketing and management in the smallholder, commercial and public sectors.

Association with other firms:
No formal association but link up with appropraite consulting firms from time to time depending on the nature of the work. Has recently worked in the agricultural sector in close collaboration with AGMMARK.

Experience in provision of marketing advisory services in the agricultural sector:
Only capability through the Nairobi office.

Analysis of project management and implementation tasks in the agricultural sector:

Provision of technical assistance	-	good from Nairobi
Comodity procurement	-	limited
Training	-	good Nairobi & Lusaka
Project supervision	-	good from Nairobi

335

Peat Marwick
Dedan Kimathi Road
P.O. Box 31014
Lusaka

Tel: 216441
Tlx: 42640

Type of organisation:
International accounting and audit firm with consulting capablity. franchised partnership

Nationality of parent:
Generally considered to be American or British.

Officer responsible for consulting services:
Mr G.J. Barnhurst

Resident consulting staff in Zambia:
None

Area of consulting specialisation:
Financial investigation including economic and marketing information. manpower and organisational studies. for public and private sector clients. Detailed investigations, analysis and recommendations into trade debt and dismantling of pipelin

Association with other firms:
No formal associations but link up with appropriate consulting firms from time to time depending on the nature of the work.

Experience in provision of marketing advisory services in the agricultural sector:
None

Analysis of project management and implementation tasks in the agricultural sector:

Provision of technical assistance	-	good from UK
Commodity procurement	-	none
Training	-	good from UK
Project supervision	-	good from UK

336

Price Waterhouse
Veritas House, 1st Floor
Heroes Place
P.O. Box 30942
Lusaka

Tel: 216152/215918
Tlx: 43470

Type of organisation:
International accounting and audit firm with consulting capability. Franchised partnership.

Nationality of parent:
Generally considered to be British.

Officer responsible for consulting services:
Mr A.S. Onion

Resident consulting staff in Zambia:
None

Area of consulting specialisation:
In Zambia lack of resident staff results in very little local availability. However, the firm has a large regional consulting capability based in Nairobi with around 50 full time staff in all disciplines including agricultural economics, marketing and management etc.

Association with other firms:
No formal association with other consulting firms although currently involved in provision of technical assistance and management support with Masdar for the ODA IRDP in Mpika. Generally associations are formed with different firms for specific projects.

Experience in provision of marketing advisory services in the agricultural sector:
None in Zambia.

Analysis of Project management and implementation tasks in the agricultural sector:

Provision of technical assistance	- good through Nairobi
Commodity procurment	- limited
Training	- good through Nairobi
Project supervision	- good through Nairobi

337

Equator Bank
Equator Advisory Services Ltd
Equator House
P.O. Box 36759
Lusaka

Tel: 219931
Tlx: 40141

Type of organisation:
Advisory services on finance and trade in the public and private sectors.

Nationality of parent:
American

Officer responsible for consulting services:
Jim Banks

Resident consulting staff in Zambia:
1 Finance specialist
1 Trade specialist

Area of consulting specialisation:
Provision of 'financial engineering' packages, particularly FOREX components to large scale commercial enterprises. Also conducts Feasibility Studies in all sectors, using outside specialists particularly where financial follow-up may be required.

Association with other firms:
No formal links with other firms but have worked with Minster Agriculture (UK), Mastock (Eire) and Western Agric (USA).

Experience in provision of marketing advisory services in the agricultural sector:
Good where such information forms an integrated part of whole package.

Analysis of project management and implementation tasks in the agricultural sector:

Provision of technical assistance	- good from USA
Commodity procurement	- through Equator Trade
Training	- very limited
Project supervision	- good from USA

338

KK Associates
now
Bitz Credit Finance and Trade Ltd
1st Floor
Insurance House
Cairo Road
P.O. Box 32094
Lusaka

Tel: 216049
Tlx: 40346

Type of organisation:
Credit, Finance and Trade advisory services.

Nationality of parent:
Zambian

Officer responsible for consulting services:
Mr J. Kambwili

Resident consulting staff in Zambia:
1 Finance specialist
1 Trade and marketing specialist
1 Economist (currently seconded to PTA)

Area of consulting specialisation:
Trade advis especially within the PTA countries. Some work done in re ation to exportation to EEC countries.

Association with other firms:
No formal links although is able to call on UK based specialist firm working in the same field.

Experience with the provision of marketing advisory services in the agricultural sector:
Fair

Analysis of project management and implementation tasks in the agricultural sector:

Provision of technical assistance	-	limited
Commodity procurement	-	fair
Training	-	none
Project supervision	-	limited

239

Arup Zambia Ltd
Farmers House
Cairo Road
P.O. Box 31406
Lusaka

Tel: 212386
Tlx: 41790

Type of organisation:
International consulting engineers.

Nationality of parent:
British

Officer responsible for consulting services:
Mr R Simpson

Resident consulting staff in Zambia:
4 Snr Civil/Structural engineers
3 Jnr Civil/Structural engineers

Area of consulting specialisation:
No particular specialisation but broad based engineering consulting services.

Association with other firms:
In UK associated with Atkins Land and Management Services.

Experience with the supervision of agricultural marketing infrastructural works:
Good

Analysis of project management and implementation tasks in the agricultural sector in relation to marketing infrastructure:

Provision of technical assistance	- good from Zambia
Procurement	- good from Zambia
Training	- good from Zambia
Project supervision	- good from Zambia

Brian Colquhoun Hugh O'Donnel and Partners (Zambia)
Craig House
Chachacha Road
P.O. Box 31943
Lusaka

Tel: 214121/214525
Tlx: 42630

Type of organisation:
Engineering consulting firm.

Nationality of parent:
British

Officer responsible for consulting services:
Mr J Kaluwa

Resident consulting staff in Zambia:
1 Snr Electrical/Mechanical Engineers
2 Snr Water Engineers
2 Snr Structural Engineers
3 Snr Civil Engineers

Area of consulting specialisation:
Broad based engineering services without specialisation.

Association with other firms:
No formal links with other firms.

Experience with the supervision of agricultural marketing infrastructural works:
Good

Analysis of project management and implementation tasks in the agricultural sector in relation to marketing infrastructure:

Provision of technical assistance	- good from Zambia
Procurement	- good from Zambia
Training	- good from Zambia
Project supervision	- good from Zambia

341

John Burrow and Partners
Corner Freedom Way/Ben Bella Road
P.O. Box 31923
Lusaka

Tel: 211877
Tlx:

Type of organisation:
International consulting engineers.

Nationality of parent:
Now British although the parent firm originated in Zambia.

Officer responsible for consulting services:
Mr J.P.C. Cull

Resident consulting staff in Zambia:
2 Senior Civil Engineers
2 Senior Structural Engineers
1 Senior Irrigation Engineer
1 Civil Engineer
3 Graduate Civil/Structural Engineers

Area of consulting specialisation:
Civil, structural and agricultural engineering including rehabilitation of rural roads and construction and maintenance of rural storage facilities.

Association with other firms:
No formal association with accounting firm. Generally works with AGMMARK on agricultural projects in Zambia and the SADCC region.

Experience with the supervision of agricultural marketing infrastructural works:
Extensive

Analysis of project management and implementation tasks in the agricultural sector in relation to marketing infrastructure:

Provision of technical assistance	-	good from Zambia
Procurement	-	good from Zambia
Training	-	good from Zambia
Project supervision	-	good from Zambia

342

Nicholas O Dwyer and Partners
AMI Building
Dedan Kimathi Road
P.O. Box 30160
Lusaka

Tel: 211183/214460
Tlx: 45210

Type of organisation:
Consulting engineers and Project managers

Nationality of parent:
Irish

Officer responsible for consulting services:
Mr A Kennedy/Mr R Crowe

Resident consulting staff in Zambia:
1 Snr Structural Engineer
5 Snr Civil Engineers
2 Jnr Structural Engineers
3 Jnr Civil Engineers

Area of consulting specialisation:
No particular specialisation.

Association with other firms:
No formal links with other firms.

Experience with the supervision of agricultural marketing infrastructural works:
Good

Analysis of project management and implementation tasks in the agricultural sector in relation to marketing infrastructure:

Provision of technical assistance	--	good from Zambia
Procurement	--	good from Zambia
Training	-	good from Zambia
Project supervision	--	good from Zambia

ZMCK Consulting Engineers
5th Floor
Design House
P.O. Box 32226
Lusaka

Tel: 214491
Tlx: 45280

Type of organisation:
Consulting Engineers

Nationality of parent:
Zambian

Officer responsible for consulting services:
Mr I Miller

Resident consulting staff in Zambia:
2 Snr Structural Engineers
4 Snr Civil Engineers
2 Snr Electrical/Mechanical Engineers
3 Jnr Structural Engineers
3 Jnr Civil Engineers
2 Jnr Electrical/Mechanical Engineers

Area of consulting specialisation:
No area of specialisation

Association with other firms:
No formal links with other firms in Zambia. Has associated firms in UK and USA and ZMCK offices in Harare. Botswana and Lesotho.

Experience with the supervision of agricultural marketing infrastructural works:
Good

Analysis of project management and implementation tasks in the agricultural sector in relation to marketing infrastructure:

Provision of technical assistance	- good in Zambia
Procurement	- good in Zambia
Training	- good in Zambia
Project supervision	- good in Zambia

-34U

LASCO (Lummus Agricultural Services Co)
Gestetner House
Gt North Road
P.O. Box 35356
Lusaka

Tel: 215814/214908
Tlx: 40500

Type of organisation:
Consulting engineers and project managers.

Nationality of parent:
USA

Officer responsible for consulting services:
Mr N McDermott/Mr D McCabe

Resident consulting staff in Zambia:
1 Structural Engineer
1 Civil Engineer
2 Electrical/Mechanical Engineers
1 Agricultural Engineer
1 Finance Specialist

Area of consulting specialisation:
The company was specifically established to replicate the success of the Gwembe Valley Project by providing a full range of agriculturally related engineering and financing services plus the ability to provide management for such projects. The company is now widening the scope of its activities to include all aspects of consulting engineering.

Association with other firms:
No formal links. Additional expertise brought in as and when required.

Experience with the provision of agricultural marketing infrastructure works:
The company itself has no experience but individuals within the company do have some experience.

Analysis of project management and implementation tasks in the agricultural sector in relation to marketing infrastructure:

Provision of technical assistance	-	good from Zambia
Commodity procurement	-	good from Zambia
Training	-	good from Zambia
Project supervision	-	good from Zambia

Commercial Farmers Bureau
VTAZ House
Chachacha Road
P.O. Box 30395
Lusaka

Tel: 213222
Tlx: 40164

Type of organisation:
Representative body for commercial farmers in Zambia.

Nationality of parent:
Zambian

Officer responsible for consulting services:
John Hudson

Resident consulting staff in Zambia:
None but commercial farmers with particular specialisation/ knowledge can be called upon.

Area of specialisation:
To promote and protect the interests of members as farmers; to support the development of agriculture; to distribute information about agriculture; to make representations to the Party and Government; and to negotiate producer prices.

Association with other organisations:
The Virginia Tobacco Association of Zambia
The Zambia Seed Producers Association
The Zambia Farm Employers Association
The Zambia Export Growers Association
The Zambia Coffee Growers Association

Member of the International Federation of Agricultural Producers based in Paris.

Analysis of project management and implementation tasks in the agricultural sector:
None. However, any Project serving the interests of the commercial farming community would benefit from close liaison and support from the CFB.

34½

Zambia Export Growers Association (ZEGA)
Midlands Farmers Co-operative
Farmers House
P.O. Box 31705
Lusaka

Tel: 217031/216992
Tlx: 40262

Type of organisation:
Association of agricultural commodity exporters.

Nationality of parent:
Zambian

Officer responsible for consulting services:
Mr M.K. Tembo

Resident consulting staff in Zambia:
Members of the association (approx 100)

Area of consulting specialisation:
Provision of advice on agricultural exporting; bulk procurment of inputs; representation to Government on producer's interests and organisation of regional and international transport for commodities.

Association with other firms:
No formal links with any other consulting firms. Close liaison with Midlands Farmers Cooperative in terms of office support etc. Linkage with International Trade Centre, Geneva.

Experience in provision of marketing advisory services in the agricultural sector:
Good in the fields of transport and input supplies. Individual members are probably the depository of greater information regarding Zamia's export agricultural markets than any other agency.

Analysis of project management and implementation tasks in the agricultural sector:

Provision of technical assistance	- limited
Commodity procurement	- good for inputs
Training	- limited
Project supervision	- none

ZEGA has only recently taken on full time executive staff. It has formely tended to be dominated by the big exporters whose interests are not always served by disemninating information. There is now a move to expand membership and provide facilities and services for the small scale producers.

34

University of Zambia, Rural Development Studies Bureau
4 Beit Rd
P.O. Box 30900
Lusaka

Tel: 250708/251565
Tlx: 44370

Type of organisation:
Research and advisory institutions with particular emphasis in the rural sector.

Nationality of parent:
Zambian

Officer responsible for consulting services:
Dr Malimo

Resident consulting staff in Zambia:
3 Agricultural Economists
1Sociologist/Anthropologist
1 Nutritionalist
1 Economist
1 Public Administration specialist
1 Educationalist or Historian

Area of consulting specialisation:
Completion of surveys relating to collection and compilation of data and the impact of interventions in the rural areas.

Association with other firms:
No formal association with any firms. The Department is part of UNZA.

Experience in provision of marketing advisory services in the agricultural sector:
- Limited advice but good experience in collection and collation of data relating to marketing.

Analysis of project management and implementation tasks in the agricultural sector:

Provision of technical assistance	-	limited
Commodity procurement	-	none
Training	-	good in Zambia
Project supervision	-	limited

The Bureau, as part of the University, suffers from the constraints usually associated with the public sector. The Director particularly mentioned great problems with transportation and with non-computer office equipment.

348

The Africa Project Development Facility
International House
Mama Ngina Street
P.O. Box 46534
Nairobi, Kenya

Tel: 26615/330436
Tlx: 25303

Type of organisation:
International consulting services supported by IFC, Washington.

Nationality of parent:
International

Officer responsible for consulting services:
Jack Thompson

Resident consulting staff in Zambia:
None

Area of consulting specialisation:
Provision of financial support for completion of Feasibility Studies for emergent African businessmen throughout the continent.

Association with other firms:
Private consulting firms, preferably within the host country of the client, are hired to undertake specific studies according to circumstances.

Appendix 1

STATEMENT OF WORK

Institutional Analysis of Agricultural Marketing Consulting Firms in Zambia

A. INTRODUCTION

USAID/Zambia is in the process of designing a project to promote agricultural marketing (Zambia Agricultural Marketing Support Project (ZAMS), 611-0214). The project is expected to focus on strengthening the marketing functions of transportation, storage, processing, and grades and standards for selected agricultural commodities which are not unduely affected by prevailing macroeconomic conditions. Initially, these commodities will be primarily oilseeds (e.g., groundnuts, sunflowers, soybeans, and cottonsead), and fruits and vegetables.

The ZAMS Project Identification Document (PID) describes a number of constraints which the project will address to promote agricultural marketing in Zambia. The project's budget will include funds (both forex and counterpart local currency) to carry out various activities such as technical assistance training, and the procurement of commodities (e.g., spare parts, tires and tubes, oilseed expellers, etc.).

The project will rely upon an 'Agricultural Marketing Advisory Service' (AMAS) to identify and carry out activities under the project. AMAS will be a private sector entity drawn from a firm or firms already providing agricultural marketing advisory services in Zambia. Specifically AMAS will be responsible for managing and implementing the project, rendering technical assistance, arranging for short and long term training, and procuring commodities to be used on behalf of entities or individuals benefiting under the project. Since the project is aimed at strengthening the private sector, the PID envisages that self-sustaining agricultural marketing support services will continue once A.I.D. support is completed.

Since May 23, 1988, a team has been carrying out further research to refine the project concept and prepare a project paper. One of the project design questions which the PP team is examining relates to the strengths and capabilities of Lusaka-based agricultural marketing consulting firms which potentially could provide the necessary base of support for AMAS, and house the AMAS project implementation staff.

350

B. OBJECTIVE AND SCOPE OF WORK

The principal objective is to provide the PP design team with an institutional anaylsis of the strengths and capabilities of Lusaka-based firms which are carrying out agricultural management consulting services in Zambia. The analysis will assist the team in determining how the AMAS should be structured, and how it could best relate to the activities of private sector entities carrying out agricultural marketing activities in Zambia.

The institutional analysis will be composed of the following:

- An inventory of the number, size, location, ownership (including nationality) and major activities of Lusaka-based firms in Zambia currently providing marketing advisory services in the agricultural sector;

- An analysis of the clientel being served by the firms, e.g., commercial farmers, emergent farmers, etc.;

- An analysis of the strenths, capabilities and weaknesses of these firms;

- An analysis of the extent to which existing firms can carry out project management and implementation tasks such as providing technical assistance, engaging in significant levels of commodity procurement, arranging for approporate short and long term training, and overseeing the day to day implementation of project activities; and,

- An assessment of how an AMAS under the ZAMS Project could best mesh with services already available through existing private sector channels.

As much as possible, the study should focus on marketing advisory services being offered for those agricultral comodities which the ZAMS project will focus upon.

The analysis will be conducted by reviewing secondary information, and holding interviews with individuals involved in offering and receiving agricultural marketing advisory services. The analysis will offer recommendations based on the kind of assistance USAID appears best qualified and advised to offer the private sector to promote agricultural marketing in Zambia.

The institutional analysis will be carried out under the guidance of the ZAMS PP Team Leader, and in daily consultation with the Deputy PP Team Leader.

351

The Contractor will:-

- provide USAID/Zambia with a draft report on the Contrator's institutional analysis, findings and conclusions;

- discuss the draft report with the ZAMS PP Design Team: and,

- prepare a final report which incorporates the comments/suggestions of the ZAMS PP Team Leader, or Deputy Team Leader.

C. REQUIRED REPORTS

The contractor will be required to furnish the ZAMS PP Team Leader with a typewritten, double-spaced draft report, along with any secondary data obtained in the preparation of the institutional analysis. The draft report will be returned to the contractor for final publication within one working day. The contractor will then submit ten copies of the report in final within the time period specified below.

D. TIMING OF WORK

The contract work will begin on or about June 9, 1988. A draft of the report will be submitted to USAID/Zambia by June 16, 1988. The report and any accompanying material will be submitted to USAID/Zambia in final not later than June 20, 1988, unless otherwise agreed to in writing by USAID/Zambia.

E. TRAVEL AND TRANSPORTATION

It is expected that the investigation will be carried out in the greater Lusaka area. Securing local transportation will be the contractor's responsiblity.

F. SUPPORT AND PAYMENT

The contractor will be responsible for providing all administrative and secretarial support required to carry out the institutional analysis, and preparing the report described above.

Payment will be made by USAID/Zambia in Kwacha upon receipt of a final report acceptable to USAID/Zambia in the format and timeframe specified above.

752

SUPPLEMENTARY ANNEX 4

USAID/ZAMBIA CONSULTANCY REPORT

ZAMS SOCIAL ANALYSIS STUDY

THE DEVELOPMENT RESEARCH CENTRE OF ZAMBIA

LUSAKA

JUNE, 1988

353

TABLE OF CONTENTS

		Page
1.	Introduction	1
2.	Background	2
3.	Organization of Agricultural Production	5
3.1	Commercial Farmers	5
3.2	Emergent Farmers	7
3.3	Traditional Farmers	8
4.	Marketing Arrangements	9
5.	Oilseeds Production, Processing and Marketing	12
5.1	Production and Marketing	12
5.2	Sunflower Oil Processing	15
6.	Marketing of Fruit and Vegetables	19
6.1	Production	21
6.2	Wholesale Trade in Fruit and Vegetables	22
6.3	Retail Trade	25
7.	Improved Market Structures	27
8	Transportation	28
9.	Distribution of Incomes	29
10.	Participation	32
11.	Summary Assessment	33

Appendix I Questionnaire for Fruit and Vegetable Marketing

Appendix II Zams Social Analysis: Eastern Province Case Study

Appendix III Terms of Reference

Appendix IV Documents Consulted

TABLES

		PAGE
TABLE 1:	Marketed Agricultural Production in Zambia, 1976 - 1986	4
TABLE 2:	Marketing Arrangements in Zambia, Statutory Boards	10
TABLE 3:	Production Targets of Sunflower During the Interim Plan	13
TABLE 4:	Estimates of Vegetables Production 1985/86 and 1986/87 seasons	22
TABLE 5:	Variations in prices between in-season and off-season, 1987/88	24

ZAMS/USAID-ZAMBIA PROJECT

SOCIAL ANALYSIS STUDY

INTRODUCTION

The purpose of this study is to compile information that will assist USAID consultants to design an agricultural marketing support project for Zambia. Emphasis is being placed on possible intervention measures that could be undertaken to achieve improvements in the agricultural marketing system for both agricultural inputs and outputs.

The objectives of the social analysis study are mainly to:

1) identify the potential beneficiaries of any ZAMS intervention measures

2) indicate how potential beneficiaries might benefit from possible interventions.

In this report these objectives are examined with reference to three possible interventions namely, oilseed processing, fruit and vegetable marketing and modes of transport. The report is based mainly on field interviews conducted in the Lusaka, Mumbwa, Chongwe, Kabwe rural and Chipata areas. Those interviewed included managers of both government (including parastatals) and private organizations, volunteer and semi-autonomous organizations, farm producers, middlemen (including wholesalers and retailers) and consumers.

BACKGROUND

Zambia covers an area of 752,617 square kilometres. The population today (i.e. 1988) is slightly over 7 million, about 60 per cent of whom live in the rural areas where the major source of livelihood is farming. In the rural areas population densities are low and vast areas of potential arable land remain largely underdeveloped.

The modern sector of the economy is largely based on copper mining, which provides at least 90 per cent of the total export earnings and contributes between 20 and 30 per cent of the country's Gross National Product (GNP). But experience over the last decade or so has shown that the importance of the mining sector to the Zambian economy is on the decline.

The contribution of the agricultural sector to GDP has remained more or less constant at less than 15 per cent. During the period 1980-84 the annual growth rate of the agricultural sector averaged only a mere 1.5 per cent. The reasons for this poor performance include inadequate rainfall, low investments and manpower problems.

The volume and value of agricultural exports have also remained low and constitute only a tiny fraction of total mineral exports (about 2 per cent). In good years the most important

agricultural export have been tobacco and maize. But in recent years the export of fruit, vegetables and flowers, mostly by a handful of large-scale commercial farmers to mainly West European markets have assumed increased importance.

The marketed production of major crops (domestic market) over the last ten years is given in Table 1. It can be seen from the table that, in quantity terms, the major agricultural commodities are maize, sugar and oil seeds. An examination of the major trends in production reveals, albeit in general terms, that a few enterprises such as sugar, sunflower seed, soyabeans, seed cotton and to some extent paddy rice and wheat have shown an expanding trend in recent years. This expansion has been largely due to a high domestic demand and government price incentives to the producer, both small and large. Sunflower seed, for instance, increased from 15,965 metric tons in 1976 to 30,805 in 1986. During the same period, the price of a 50 kg bag of sunflower seed increased from K10 to K41.95, an increase of nearly 320 per cent.

Marked production of cotton and soyabeans has also increased considerably during the 1976-86 period. However, groundnut production has declined mainly as a result of uncompetitive producer prices for this particular commodity. The output of other major crops has fluctuated from year to year mainly due

Table 1: Marketed Agricultural Production in Zambia, 1976-1986

	Unit	1976	1977	1978	1979	1980	1981
Maize	Tonnes	746,426	693,000	657,000	331,255	382,988	693,341
Tobacco: Virginia		6,262	5,588	3,700	4,590	4,127	2,319
Barley		212	212	264	381	554	665
Sugar		84,028	71,203	73,450	102,148	110,601	102,318
Groundnuts		8,371	7,229	2,234	2,737	2,028	1,320
Sunflower		13,079	13,320	11,355	12,869	28,279	19,223
Seed Cotton		3,891	8,929	10,200	14,916	15,00	17,177
Wheat		3,459	4,741	6,400	4,322	6,670	11,478
Paddy Rice		2,224	2,090	2,970	1,686	2,511	2,673
Soya Beans		944	1,274	2,844	1,294	1,989	3,673
Coffee		13.1	24	55	-	28	40
Tea (Green Leaf)		-	64	85	-	314	362

SOURCE: Central Statistical Office and Ministry of Agriculture and Water Development

Table 1 Cont'd

	Unit	1982	1983	1984	1985	1986
Maize	Tonnes	508,000	531,164	564,087	636,267	953,031
Tobacco: Virgina		1,861	2,340	2,600	2,200	3,100
Barley		704	537	501	565	650
Sugar	'000'	117,058	1,086	1,179	-	-
Groundnuts		810	1,042	1,58	2,419	4,000
Sunflower		20,362	30,464	40,425	25,496	23,750
Seed Cotton		13,171	31,230	40,915	-	-
Wheat		12,510	10,216	11,314	2,793	-
Paddy Rice		2,820	5,068	5,438	6,280	8,098
Soya Beans		5,140	6,898	9,555	10,601	11,700
Coffee		-	-	-	-	-
Tea (Green Leaf)		393	-	-	-	-

SOURCE: Central Statistical Office and Ministry of Agricultural and Water Development

to variations in weather and intermittent supply of farm inputs but the general trend has been upward as can be seen from Table 1.

ORGANIZATION OF AGRICULTURAL PRODUCTION

A basic feature of agricultural production in Zambia today is that it is undertaken by what are seemingly three distinct farming groups, namely commercial, emergent and traditional farmers. These groups may be differentiated in terms of their location, land tenure, farm size, the kind of crops grown and the type of technology employed, volume and value of farm produce, sales and income levels. A brief description of the three farming groups is given below:

Commercial Farmers

These are a small, but influential group of large-scale commercial darmers who are mostly of European descent. In 1987 this group numbered about 500 farmers and were located mainly along the Livingstone-Kabwe line-of-rail. This area covers some of Zambia's best agricultural land, but most importantly, offers ready access to the major urban markets of Livingstone, Lusaka and the Copperbelt.

Large-scale commercial farmers in Zambia are normally associated with modern relatively capital-intensive system of agricultural production and have farms in excess of 40 hectares (Ministry of Agriculture and Water Development definition). They are heavily

dependent on external agricultural inputs such as tractors, fertilizers and pesticides and insecticides. Their access to large amount of financial capital makes them to be the most productive group.

The main crops grown by large-scale commercial farmers include hybrid maize, tobacco, sunflower seed, cotton, soyabeans, wheat and horticultural products. Almost all of the crop production by large-scale commercial farmers is marketed. Beef, pigs, poultry and dairy products are also produced and marketed by commercial farmers.

To the small group of large-scale commercial farmers can be added the various state agricultural enterprises, most of which operate in partnership with foreign-owned, private companies. Examples of these include the Nakambala Sugar Estate, the Mpongwe Wheat Scheme, the Kawambwa Tea Company, the Gwembe Development Company, the Cashew Company and many others. It is important to note, however, that most of the state-cum-private ventures are crop-specific by their nature.

Emergent Farmers

Emergent, or small-scale commercial farmers can be defined as those who sell between 50 and 100 per cent of their crop and who practice some of the improved technology characteristics of large-scale commercial farmers. In other words, these are farmers who are increasingly producing for the market, in contrast to subsistence farmers whose prime objective for cultivation is direct home consumption.

Since 1981, the Zambian Central Statistical Office (CSO) and the Ministry of Agriculture and Water Development (MAWD) have recognized as emergent farmers those with holdings between two and 40 hectares, and with an annual turnover of not less than K1,000. About 100,000 farm families (about 15 per cent of the total) are now thought to belong to this category.

Like large-scale commercial farmers, emergent farmers are still largely located in the Southern, Central (including Lusaka) and Eastern Provinces, although pockets of them can be found in almost every district of Zambia.

The crops grown by this group of farmers mainly include hybrid maize, sunflower, cotton, beans, groundnuts, vegetables and some fruit. Emergent farmers also rear some cattle, pigs and poultry, but on a smaller scale than that of commercial farmers.

In many ways emergent farmers are the focus of deliberate government effort since they are seen as being "progressive" by both planners and decision-makers. They are the ones who receive special assistance in improving their productivity by means of land settlement, extension training and better access to credit by comparison with subsistence farmers. In this respect, emergent or small-scale commercial farmers are perceived by many a development expert as the most important group in any future restructuring of Zambian agriculture.

Traditional Farmers

The bulk of Zambia's population still consists of relatively poor traditional or subsistence farmers unevenly distributed over much of the countryside, These number about 600,000, or 85 per cent of the total number of farm families in Zambia.

Traditional farmers can be seen in terms of cultivating very small holdings of between 0-2 hectares, growing mainly subsistence crops such as cassava, finger millet, sorghum, beans, groundnuts, and various types of local vegetables. Very little, if any, of the farm produce is marketed.

This group of farmers scarcely uses improved farm technology (such as hybrid seeds, fertilizers and tractor/or plough) and there is no doubt that family labour is the main input of agricultural production. Because they rarely produce for the market, traditional farmers are largely by-passed by government supported development programmes.

MARKETING ARRANGEMENTS

Since independence in 1964, the most important means of marketing agricultural produce in Zambia have been through statutory marketing boards instituted by the Government. Other channels are provincial marketing cooperatives, and to a lesser extent private enterprises.

In general, marketing boards have been given a mandate to market specific agricultural products at government-controlled prices. As such the Zambian Government uses the marketing boards as an important means to manipulate production and consumption through price fixing and /regulation of both producer and consumer subsidies. In 1988 there are four notable statutory marketing boards handling crops in Zambia. These are the National Agricultural Marketing Board (Namboard), the Lint Company of Zambia (LINTCO), the National Tobacco Company (NATCO) and the Zambia Horticultural Products (ZAMHORT). The various crops handled by these marketing boards are depicted in Table 2.

Provincial Co-operative and Marketing Unions are the other major channels of marketing agricultural produce in Zambia. In the provinces most primary societies are encouraged by the Government (through the Ministry of Cooperatives) to join into multi-purpose

Table 2: Marketing Arrangements in Zambia, Statutory Boards

Board	Produce Handled	Other Functions
NAMBOARD	Maize	Imports, stores and markets fertilizers, chemicals, seed, grain bags and farm equipment
LINTCO	Cotton, Coffee soyabeans	Provides inputs, credit and extension services
NATCO	Tobacco	Supports production schemes, processing grading and exports tobacco
ZAMHORT	Fruit and vegetables	Processing and canning

co-operatives in order to look after the interests of their members. In fact, as the Government Agricultural Marketing Policy still stands, the idea is to have eventually all marketing of major agricultural commodities in the provinces to be handled by Co-operatives and Marketing Unions. Besides the marketing function, provincial unions make available to farmers seeds, fertilizers and implements for crop production.

In addition to the statutory marketing boards and provincial co-operative and marketing unions, the private sector is visibly present in marketing. This is especially the case in the areas of buying, manufacturing and distributing. For instance, private manufacturers of cooking oil (e.g. Southern Africa Oil Mills based in Lusaka) buy sunflower seed directly from farmers for extraction. In peri-urban and remote areas private hammer-mill into mealie meal. But perhaps most significant is the fact that the marketing of fruit and vegetables is largely in the hands of private hands. One explanation for this is that fruit and vegetables are currently being produced on a small scale and it is often the case that producers themselves take their produce to the urban markets for sale. And since the imposition of a ban on the importation of concentrates for the manufacturing of coca-cola and fanta late last year, big companies such as the Copperbelt Bottlers and Sunquick are now making arrangements with farmers to buy fruit in bulk for the local manufacture of a variety of squashes. The parastatal Zamhort is also heavily involved in this line of business.

The effectiveness of the existing marketing arrangements are however hindered by the ill-defined relationship between the various marketing agencies. For instance, under the present system the relationship between Statutory Boards, the Provincial Co-operative and Marketing Unions and the potential private traders

is not clear. If anything, the present marketing arrangements discourage private traders wishing to participate actively in the marketing of major crops.

An attempt will now be made to examine in more detail, one, the production and possible processing of oilseeds (i.e. sunflower) at the village level and, two, the marketing of fruit and vegetables in and around Lusaka. This is done with special reference to our field investigation conducted between the 24th of May and 12th June, 1988.

OILSEEDS PRODUCTION, PROCESSING AND MARKETING

Production and Marketing

At present the major vegetable oilseeds in Zambia are cotton seed, groundnuts, soyabeans and sunflower. With the notable exception of groundnuts, oilseeds are produced mainly as cash crops and are marketed mainly through the Lint Company of Zambia and the Provincial Co-operative Unions, that is, government-approved channels. Groundnuts which have long been cultivated in Zambia especially in Eastern Province are grown for both cash and subsistence requirements and it is not surprising, therefore, that only a small proportion pass through the official marketing channels; the bulk of it is marketed privately whether locally or across the national boarders. With the exception of soyabeans,

Table 3: Production Targets of Sunflower During the Interim Plan

Province		1984	1985	1986	1987	1988	1989
CENTRAL:							
A	ha	12,000	12,340	12,530	14,641	21,533	22,610
P	bags	182,518	200,400	182,000	103,446	223,166	234,324
COPPERBELT:							
A	ha	690	585	230	188	320	441
P	bags	3,378	7,890	2,000	1,520	3,206	3,364
EASTERN:							
A	ha	20,700	17,400	16,880	24,185	26,604	27,934
P	bags	270,000	247,080	147,500	310,717	342,888	360,032
LUAPULA:							
A	ha	290	190	110	87	184	193
P	bags	3,300	1,500	1,000	1,566	1,991	2,091
LUSAKA:							
A	ha	3,800	3,750	3,720	2,253	2,575	2,704
P	bags	61,537	67,830	40,000	18,888	32,922	34,508
NORTHERN:							
A	ha	850	425	170	160	474	498
P	bags	5,000	8,150	1,500	2,008	4,706	4,941
NORTH-WESTERN:							
A	ha	140	39	170	42	109	114
P	bags	3,169	977	1,500	265	1,199	1,259
SOUTHERN:							
A	ha	19,000	27,761	17,330	10,906	36,061	41,014
P	bags	292,347	313,510	240,000	110,485	346,502	363,932
WESTERN:							
A	ha	130	100	99	109	120	126
P	bags	820	240	582	582	640	672
TOTAL ZAMBIA:							
A	ha	57,690	62,519	57,200	31,600	90,979	80,879
P	bags	675,470	847,577	616,100	269,665	1,128,124	1,128,124

SOURCE: Interim National Development plan 1987-88

NOTE: A = Area Planted

P = Production

oilseeds are mainly produced by small farmers (emergent farmers) located mainly in Southern, Central, Lusaka and Eastern Provinces.

As shown in Table 1, oilseed production has been the fastest growing agricultural subsector in Zambia with very high growth rates. Unlike food grains, production in vegetable oilseeds has generally shown an upward trend, particularly during the period under review (1976-86).

Production targets for sunflower during the Interim National Development Plan (INDP) are given in Table 2. It can be seen that the Southern, Eastern and Central (including Lusaka) provinces, in that order, constitute the major producing areas of sunflower in Zambia. In 1986, the four provinces combined produced about 90 per cent of Zambia's sunflower production. The major sources of growth in sunflower production, as well as for other oilseeds have mainly been due to an expansion in area cultivated (see Table 2) and possible increases in land productivity resulting from the use of improved seed varieties. Prices incentives to the farmer in recent years no doubt have also helped the situation.

Major constraints in oilseed production include inadequate technical information and high-cost marketing and processing systems. Thus the importance of developing appropriate technical advice is paramount to oilseed production.

SUNFLOWER OIL PROCESSING

At the national level, vegetable oil production mainly from sunflower and cotton seed is done by Premium Oils Limited (formerly Refined oil Products). National demand for edible oils stands at about 40,000 tonnes per year. Although Premium Oils operates using modern sophisticated technology, it often operates below capacity (about one-third to about half of full-capacity) and is far from satisfying domestic demand for vegetable oils. It is estimated that about 50 per cent of Zambia's vegetable requirements are imported, It is against this background that small-scale oil press units, particularly to serve the remote rural areas, are being encouraged in Zambia.

Currently there are a number (at least ten) of "pilot" schemes experimenting with sunflower oil expressing at conditions approximating the village level. Notable among these are the Kasisi Project (based at Kasisi Mission near Lusaka International Airport) and the Mount Makulu Pilot Project based a few kilometres south of Lusaka. *

---

* NOTES

According to information obtained at the Technology Development Advisory Unit (TDAU) of UNZA, another unit is located at Sinanjola village in the Gwembe run by the Gossner Mission another in Kaoma run by a cooperative, and another is located in the Luapula Province.

The Kasisi project is being operated and managed in conjunction with the Technology Development Advisory Unit (TDAU) which is based at the University of Zambia. That at Mount Makulu is a collaborative venture between a team of experts based at Mount Makulu National Research Station, VIS, VITA and ZAMARE.

A visit to the Kasisi sunflower oil expeller unit revealed that the facility basically consists of four separate, hand-operated pacts; a decorticator winnower, roller and spindle press, all of which are now manufactured locally by Lutanda of Kitwe.** The original unit, which used an hydraulic press, was a donation from the Royal Tropical Institute of the Netherlands (KIT), but is no longer used. The cost of the locally manufactured oil press and accessory equipment was put around a figure of K69,000. The Mount Makuly oil expeller is in the same price range at K64,000.

The sunflower oil expeller at Kasis is operated by six young men who take turns at working at various points of the production process. Under normal circumstances the men work eight hours a day in which they are able to process 200 kg of sunflower seed. Once crushed this yields about 42 litres of unrefined oil which sells at Government-controlled price of K9.20 per litre. Thus a full-working day bring in about K386.40. The oil expelling process

---

** It is reported that Lutanda has so far manufactured about ten such units, all of which have been sold.

372

also yields a 100 kg of sunflower cake as a by-product which sells at K1.00 per kilo as stock feed. Thus altogether it is possible to raise about K486.40 in a day from the oil expelling process. However, when the cost of sunflower seed at K76 per kilo (1988 prices) is taken into account, this works at K304 for the 200 kg required per day. Arithematically, this leaves a gross profit of K182.40 per day, which should go towards meeting labour and management costs, interest and depreciation on machinery.

Since the average consumption of sunflower oil by a family of six people is about 0.75 litre per week, the Kasisi unit producing 210 litres a week (i.e. working five days a week), caters for a market of about 280 families, or a village having approximately 1,680 people.

In subsequent interviews with Fr. McKenna (the overall-in-charge), workers and some of the trainees farmers, it became apparent that the sunflower oil expeller at Kasisi was a welcome venture. It was learnt that the unit provided a ready market for the sunflower produced by the mission and the surrounding local farmers. And unlike before when all the sunflower grown in the area used to be sold to the cooperative union for onward delivery to Lusaka, the situation has now changed especially that people can now obtain vegetable oil locally. Thus there

can be no doubt that both the mission and the local people are benefitting by having an oil press in their midst. Additionally, it is thought that this is likely to stimulate sunflower production at Kasisi mission and the surrounding areas. And although the labour force operating the unit is small it cannot be denied that it has contributed, albeit in a small way, towards employment and income generation. Additional benefits are that the few workers who operate the sunflower oil expeller at Kasisi are learning additional skills which they might find useful for their future career development. The only regret, perhaps, is that the present production line is an all-male outfit with little or no prospects for women having to participate in the processing. It is also doubtful whether at a cost of K69,000 for a a complete oil expelling unit many private entrepreneurs would be willing to venture into sunflower processing not knowing all the risks that are involved.

It is also worth noting that the Kasisi mission where the sunflower oil press is being tested has already got a well-developed infrastructure and a good management team headed by Fr. McKenna. If these ideal conditions did not exist, it is doubtful whether the Kasisi experiment would have been a success story that it is today. Most rural areas lack such services and it is therefore important to take this into account when designing the project.

MARKETING OF FRUIT AND VEGETABLES

Zambia produces a number of fruits and vegetables such as oranges, lemons, strawberries, grapefruit, guavas, pineapples, avocados, cabbage, rape, tomatoes and onions. These are mainly grown for the domestic market although since the early 1970's both private and parastatal enterprises have been exporting part of their produce to European markets and the adjacent African markets, especially Angola, Mozambique, Zaire and Botswana.

At the national level the production of fruit and vegetables has increased rapidly mainly because of high demand, particularly from the ever-expanding urban population. The high cost of meat and fish has also meant that people eat more of vegetables which are cheaper. The high nutritive value of fruit and vegetables cannot also be over-emphasized.

Table 4 shows estimates of vegetables production in the 1985/86 and 1986/87 seasons for which data are available. It can be seen from Table 4 that the four major type of vegetables which are grown in Zambia are cabbage, tomatoes, rape and onions, all of which are mostly for the domestic market.

In preparing this document our attention focussed on examining the marketing channel for fruit and vegetables in Lusaka and the surrounding areas. Information was obtained using an

Table 4: Estimates of Vegetables Production 1985/86 and 1986/87 Seasons (metric tonnes)

Crop	1985/86	1986/87	Percentage change
Green Beans	411	362	-11.9
Cabbage	529,945	785,272	+48.2
Cucumber	510	266	-47.8
Carrots	3,881	5,568	+43.5
Kale	2,663	2,476	- 7.0
Okra	2,948	4,107	+39.3
Onions	11,825	11,104	- 6.1
Peas	145	85	-42.1
Rape	23,163	23,753	+ 2.5
Tomatoes	77,547	75,452	- 2.7
Eggplant	5,700	7,260	+27.4
Cauliflower	3,740	2,897	-22.5
Swiss chard	712	971	+36.4

SOURCE: NCDP, Economic Report 1987, p.113

376

open-ended questionnaire (Appendix 1) combined with informal interviews with growers, traders and consumers. Also interviewed were people who are involved in the day to day running of markets in Lusaka, particularly Party and District Council officials. The survey findings are reported below.

Production

Most of the fruit and vegetables sold in Lusaka urban markets come from places such as Makeni, Chongwe, Kabwe Road, Mumbwa Road and Great East Road, all of which are within a 50 kilometres radius of the city centre. But it was quite evident that the nearer the point of production, the greater the chances of reaching the market as the perishable nature of vegetables can be quite a problem. The survey also revealed that the production of fruit and vegetables is clearly an established economic activity for both large and small farmers.

Investigations revealed that the farmgate price for cabbages ranged between K25 and K80 per 50kg bag; that for rape ranged from K15 to K25 per pocket; the price for tomatoes ranged between K15 and K90 per box and that for onions between K20 and K90 per pocket. However, since Lusaka prices are higher than farm prices, nearly every farmer prefers to sell his produce in Lusaka.

As most farmers have to being their own produce to Lusaka, the general complaint was that transport costs are very high especially that they have to hire private transporters. A full bag or pocket of vegetables normally costs between K7 and K10 to be transported

377

Wholesale Trade in Fruit and Vegetables

The most significant trading point for fresh fruit and vegetables in Lusaka is the Soweto market situated a stone's throw on the western side of the city centre. It is at Soweto where producers, wholesalers and retailers converge from very early in the morning conduct their daily transactions. All major roads from leading producing areas converge on Soweto market. Every single day of the week is business day, and their is no sabbath.

Soweto market was established as an official marketing point in the mid 1970's beginning with only rudimentary structures. There are now about 1,000 approved stalls, but the number of people who trade there daily is more than double that (conservative estimate)* There is one toilet for males, and one for females. There are also two water taps located at strategic points in relation to the market. There is no electricity supply to the market. The general supply sanitary conditions leave much to be desired. The two toilets are often blocked and sewage runs uncontrolled along the

---

Note

In May this year the Government ordered the Police and Paramilitary to erase all illegal structures at the market. Since then the Lusaka Urban District Council has allocated marketeers plots on which to build proper stalls. Construction work has began.

breadth of the market. The small enclosure reserved for meat sales is heavily littered with house flies. During the rainy months of November to March, the market is literally flooded with rainy water. During the dry months the opposite seems to be the case, Soweto market gets covered in a cloud of dust. Without any exaggeration these are the deplorable sanitary conditions under which fresh fruit and vegetables are marketed at Soweto. The conditions are not very much different at other markets visited except those located at the city market, Longacres and Northmead.

Deliveries of fresh fruit and vegetables at Soweto market begin to arrive as early as 05.00 hours early in the morning. Most farmers usually prefer to sell their produce directly to marketeers, who are mostly women. However, a system has developed whereby a group of mostly unemployed youth, locally known as Bakaponya, buy the bulk of the produce cheaply from farmers and later resale, within a short time, to helpless women marketeers at inflated prices. It was observed one early morning for example that, pockets of rape which were selling at K15 per pocket were readily snapped by the young men who within minutes resold them at K25 per pocket such practices go on unabated largely because there is no large-scale wholesaling facility at the Soweto market.

Further investigations revealed that prices are arrived at through hard bargaining on both sides and that they are largely influenced by the supply situation. That is, if the market gets flooded with

fruit and vegetables, the lower the prices become and vice versa. For most fruit and vegetables, the period from May to August is the in-season and November to April is the off-season. Table 5 gives some indication of the variation in prices between the two seasons for selected commodities.

Table 5: Variation in prices between in-season and off-season, 1987/88

Commodity	Unit	In-season	Off-season
Cabbage	Bag	K30	K60
Rape	Pocket	K15	K40
Tomatoes	Box	K15	K60
Onion	10 kg	K65	K125
Okra	Tin	K7	K12
Potatoes	20 kg	K50	K65
Oranges	10 kg	K60	K100

Note

a) A bag normally denotes a 90 kg bag

b) A pocket normally denotes a 50 kg bag

c) Box weighs about 20 kg

d) Tin is approximately equal to 10kg

380

Table 5 shows that for most commodities price differentials between in-season and off-season can be as much as 50 per cent. This situation inevitably distorts both the pricing and marketing structure and needs to be addressed urgently. One possible solution is that farmers should learn to sow small areas of vegetables successfully in order to produce a harvest that is spread more evenly, as demand for consumption is continuous and only small quantities are required daily in fresh condition by each household.

Another important observation made with regard to wholesale marketing is that this year's prices for most fruit and vegetables are higher than those charged last year. For instance, a box of tomatoes which cost about K50 at this time last year is now going for between K60 and K70 wholesale. This is an increase of over 50 per cent within a year. Most producers explained this increase in price in terms of increased input and transport costs.

Retail Trade

In addition to the Soweto market there are several retail points for fruit and vegetables within Lusaka. Most of these are based at officially approved market centres in each of the main residential areas of Lusaka. Examples include the City Centre market, Luburma market at Kamwala, Matero, Libala, Lilanda, Mtendere, Kaunda Square, and so on. At these markets fruit and vegetables

vendors are required to pay a daily levy of 50 ngwee to the Lusaka Urban District Council. Although marketeers pay daily fees to the Council, the market structures in terms of construction, the services provided and the general sanitary conditions are no better than those described for Soweto market. There are also several other unauthorised marketing centres distributed throughout the city, but these are mostly in the open or along shop corridors.

Retail marketing of fruit and vegetables mostly involves selling commodities in smaller quantities or measures. Apart from the City Centre, Northmead and Longacres markets, the remaining markets do not use weighing scales when selling. Hence commodities are sold in small bundles or per heap, as the seller sees fit. But there seems to be a general rule to the trading as most fruit and vegetables are sold in multiples of 50 ngwee, K1, K2, K5 and so on. This system of selling seems to be suitable especially for consumers in low-income categories who cannot afford to buy in bulk. And as for wholesale prices, retail prices fluctuate according to season. But the most common practice of price manipulation is that of adjusting the quantities sold according to season. That is the price charged remains the

same but one gets more or less, depending on whether the commodity is in-season or not. One observable fact however is that the quantities sold for most fruit and vegetables have tended to get smaller and smaller over the years. In other words, one needs to spend extra in order to get the same quantity got a year or so ago.

One other strong feature of retail trade in fruit and vegetables is that it is dominated mostly by women and the youth. Most of these are engaged in the marketing of fruit and vegetables on a full-time basis. There is no doubt that the selling of fruit and vegetables offers an essential economic means to women and the youth.

IMPROVED MARKET STRUCTURES

No matter who one talks to, be it a marketeer, street vendor, council official or consumer, all are agreed that marketing facilities in Lusaka are grossly inadequate and that most lack services such as water, sewage, electricity, storage and display areas.

Most of the people we talked to attributed the widespread in street vending to lack of proper marketing facilities at established markets. This view was re-inforced by those who said that established markets do not have enough space for everyone who might want to own a stand. It was not surprising, therefore, that

most of the marketeers interviewed said that they would be more than willing to pay modest amounts for the improvement in present marketing facilities. After all, they said, they already pay daily to the Council for occupying tiny stalls which are poorly serviced. Thus any project intervention aimed at improving established or new markets would be more than welcome. In our view, Soweto market in Lusaka would be a good starting point as it caters for both wholesalers and retailers and is so far the biggest.

TRANSPORTATION

Both producers and marketeers of fruit and vegatables identified lack of transport to and from sources of supply as a major constraint. The most common mode of transport used to ferry fruit and vegetables from farms to the markets are hired private trucks and/or vans. But these are in short supply and are often unreliable as a form of transporting agricultural products. Occasionally farmers use public transport, that is, buses to ferry their fruit and vegetables to the markets, but again, given the current poor state of public transport throughout the country this mode of transport is not adequate. Apart from the fact there are few vehicles on Zambia's roads, most of them are not road-worthy due to lack of spares, tubes and tyres.

For the transportation of agricultural products over a relatively short distance, say, under ten kilometres, possibilities exist for the use of bicycles, motor-cycles, wheelbarrows, hand-and ox-carts. The local demand for these items at present is very high and there are not many institutions engaged in their production. In order to meet the high domestic demand the Zambia Co-operative Federation (ZCF) is planning to set up a factory in Lusaka to manufacture ploughs, hoes, scotch carts and other agricultural implements. If the intended project is to pull through, ZCF might need some form of external assistance. For no information on modes of transport that might be appropriate for use at the local level see the Eastern Province case study (Appendix II).

DISTRIBUTION OF INCOMES

Within the small-scale farming sector in Zambia there exists a wide divergence in the level of production and income achieved by individual farming households. Such differences could be explained by variations in the resources available to households and partly by the level of services which farmers receive.

A number of studies (Marter and Honeybone, 1976 and Mwila, 1986) have established the existence of marked income differences between the more favoured regions of Central, Southern and Eastern Provinces (C.S.E.) and the less favoured areas of Copperbelt, Luapula, Western, Northern and North-Western (OTHER). A comparison between the two broad regions readily reveals that relatively more farmers in the C.S.E. region are in the high income categories than are farmers in the OTHER region. This is particularly the case with crop incomes as opposed to total estimated household income which would seem to suggest that non-crop activities form an additional and important source of household income in both regions. In the 1986 study, for example, Mwila found that crop sources of income were particularly significant for households in high income categories and less for those in the low income categories. It was found that in the case of farmers making less than K200 per year, the reliance on crop income was much less and averaged about 20 per cent only. In contrast, households with gross incomes of over K1,000 earned almost three quarters of their incomes from crop sales. This was true for farmers in both regions.

The main sources on non-agricultural or off-farm income in most cases include beer brewing (an economic activity exclusively undertaken by women), fish and handicraft sales, seasonal paid employment and cash and goods from relations in paid employment.

in towns. However, whereas beer and fish sales are more common among people of both regions, seasonal employment is more prevalent in the C.S.E. region where it is possible for one to obtain seasonal employment on commercial farms and the modern sector. To some extent, it would appear that off-farm incomes do compensate for low farm incomes.

Further analysis of the 1986 data reveals that rural income distribution is highly skewed between and within the two geographical regions. Analysis shows that the top 20 per cent of the households receive close to half of the total household income, while the bottom 40 per cent of the households get less than one-tenth of the total household income. In particular the survey data show that farmers' crop incomes in the lowest income bracket on average contribute less than a quarter to total household income. In contrast, crop income constitute a large part of total household income in the middle and upper income brackets, this distinction being more marked in the C.S.E. region than in OTHER.

In general, it appears that those who obtain incomes from farming rely more on non-agricultural activities to supplement their total income and this to a certain extent moderates the overall income disparities within and between the two regions.

Nevertheless, the opportunities for income from off-farm activities are very limited, hence the overall importance of agricultural sources of income for the majority of rural households.

PARTICIPATION

An issue of great importance in the Zambian situation is that of participation by potential beneficiaries in identifying what needs to be done. A number of strategies, mainly capital-intensive and centrally managed "special projects" have been tried in Zambia before. But these have been condemned for being insensitive to the particular needs of ordinary Zambians. A prefered strategy therefore would be one which relies on people to decide their own projects. It should be a strategy which provides proper incentives and basic services, but allows the people themselves to initiate and implement projects. This is because it is almost impossible for government, or indeed any development agency, to decide in each and every case what the priority should be; some people might want a road but not a market shed. Many projects have not been implemented in the past mainly because people were not motivated enough as they considered such projects as not theirs but for the "outsiders".

In the Zambian context, it is obvious that the Party must play a leading role in ensuring greater participation by the majority of the people in satisfying their own needs, through the establishment of self-reliant and self-governing social and economic groups and organizations at the local, regional and national levels. But it is important that the interaction between the Party and the Government service units, especially at the local level be coordinated so as to minimize areas of conflict.

SUMMARY ASSESSMENT

The study of oil expelling from sunflower seed and the marketing of fruit and vegetables discussed above has demonstrated that with the necessary support services, such as effective transportation, Zambia can meet its vegetable oil and fruit and vegetable requirements. It has been shown that although operating under very difficult and trying circumstances, the Zambian private entrepreneurs, especially the producers and marketeers of fruit and vegetables strive to make their small-scale enterprises into economically viable entities. Above all, however, the results of the study seem to suggest that given the right social, political and economic environment,

small-scale private entrepreneurs can go a long way in meeting the demands of the consumer.

Thus based on the overall assessment of the socio-economic context of the Zambian situation, the proposed ZAMS project may need to consider the following issues:-

1) First and foremost, it should be realized that the Zambian community is not an homogeneous group, but one which is made up of many distinct groups operating under different socio-economic conditions. For instance, it should be realized that the particular needs of the large-scale commercial producer are different from those of the small producer.

2) Whereas there is a huge demand for vegetable oils, this demand is not concentrated in one specific area. Thus any processing facilities that are to be set up will need to take into account the distribution of production oilseeds and the concentration of population.

3) With regard to improving the marketing of fruit and vegetables, the project team should carry out feasibility studies to determine what facilities are required by local institutions in general and marketeers in particular.

4) Lack of adequate transport facilities poses a major constraint on the operation of both the producer and the marketeer. This is one area therefore which the project might want to address seriously.

Finally, if the proposed project has to achieve any considerable measure of success, it should be area-specific, and ensure that both local people and institutions participate fully in the decision-making process.

APPENDIX 1

ZAMS SOCIAL ANALYSIS STUDY- FRUIT AND VEGETABLES

CHECK LIST

INSTRUCTIONS

i) The purpose of this study is to trace the marketing chain of the fruit and vegetables in and around Lusaka District.

ii) It is intended primarily to seek/assess public opinion of both producers and consumers of fruit and vegetables with regard to production, pricing, transportation and market structures.

iii) Information to be gathered should be done through informal interviews with farmers, traders/sellers, consumers and Party and Council officials.

iv) Please observe and note everything you hear and/or see. Every bit of information will be useful.

QUESTIONNAIRE: FRUIT AND VEGETABLE MARKETING

Area of Survey/Market _____ Date: _____

Section A: Producers

1. What type of fruit and vegetables do you grow?

   i) Fruits (specify) .....

   ii) Vegetables (specify) .....

2. Where do you sell your fruit and vegetables?

   .....

   .....

3. How do you transport your fruit and vegetables to the nearest market?

   .....

   .....

4. Who buys your fruit/vegetables?

   .....

   .....

5. What price do you get per kg/bag/box?

   .....

   .....

6. i) What time of the year do you get the highest price for your produce? why?

   .....

   ii) How much per kg/bag/box? .....

7. i) What time of the year do you receive the lowest price, and why?

   .....

   .....

   ii) How much per kg/bag/box? .....

   .....

Section B: Traders/Wholesalers

8. Where do you buy fruit and vegetables from?

   Fruit .....

   Vegetables .....

9. At what price do you buy?

	Last Year (1987) (Unit)	This Year (1988)
Fruit	.....	.....
	.....	.....
Vegetables	.....	.....
	.....	.....

10. What mode of transport do you use to transport produce to the market?

    .....

11. Where do you sell the produce you buy?

    .....

12. To whom do you sell?

    .....

13. At what price do you sell?

	Last Year (1987) (Unit)	This Year (1988)
Fruit	.....	.....
	.....	.....
Vegetables	.....	.....
	.....	.....

14. What time of the year do you receive:

    i) the highest price? .....

    ii) how much per kg/bag/box? .....

15. i) lowest price? .....

    ii) how much per kg/bag/box? .....

294

Section C; Retailers

16. Where and from whom do you buy fruit/vegetables from?

    Fruit .....

    Vegetables .....

17. At what price do you buy?

	Last Year (1987)	(Unit)	This Year (1988)
Fruit	.....		.....
	.....		.....
Vegetables	.....		.....
	.....		.....

18. To whom do you sell your fruit and vegetables?

    .....

    .....

19. At what price do you sell?

    Fruit ..... kg/bag/box

    Vegetable ..... kg/bag/box

Section D: Consumers

20. What fruit/vegetables have you just bought?

    .Fruit.....

    Vegetables .....

21. At how much did you buy these fruit/vegetables?

    Fruit ..... per kg/bag/box/bundle

    Vegetable ..... per kg/bag/box/bundle

22. From whom did you buy?

    .....

24. How much money do you spend on fruit/vegetables per week?

Fruits K..... Vegetables K .....

Section E: General Questions

25. What marketing problems do you face in marketing fruit/ vegetables?

.....

.....

26. What transportation problems are there?

.....

.....

27. What do you think of the present marketing system for fruit and vegetables?

.....

.....

28. Would you prefer to be selling your fruits and vegetables at permanent market structures (Discuss with reference to water, electricity, sewage and display areas).

.....

.....

.....

APPENDIX II

USAID/ZAMBIA

ZAMS SOCIAL ANALYSIS STUDY: EASTERN PROVINCE

1.0 OIL SEEDS

Oil Seeds Production

The Eastern Province has been a major producing area of sunflower, groundnuts and cotton. However, as Table 1 below shows hectarages under sunflower and groundnuts production, and hence production figures and sales of these oil seeds have been gradually dominishing over the past five or so years. Attention was focussed on sunflower and groundnuts and not on cotton. A number of factors are responsible for the lack of increased production and sales of these two types of oil seeds. Private buyers pay farmers promptly and slightly more for the crops. In addition, the pricing system is currently biased in favour of the maize producer and not the sunflower and groundnuts producers. Hence, the shift away from oil-seeds production towards maize.

Oil Production

There is one big oil processing plant in Katete owned and ran by the Eastern Province Cooperative Union (ECU). This is meant to serve the whole Province. The plant which was installed in 1984

and commissioned early 1985 can take 4,000 kg, of sunflower per hour. (5 kg of sunflower can produce one litre of cooking oil).

Thus if the plant was working at fully capacity it would need 80 x 50 kg bags an hour, about 600 bags a day, 3,000 bags a week and 156,000 bags a year, i.e. more than twice this year's estimated total sunflower production. Working at full-capacity the plant would produce more than 31,000 litres of cooking oil per year. From interviews carried out, an average household of six people normally requires 30 litres of cooking oil in a year. At this rate, slightly more than 1,000 of the estimated 1000,000 households would have enough cooking oil in a year; that is, if there was enough sunflower and the oil processing plant was working at full capacity. In other words if all the estimated 100,000 households in the province had access to cooking oil and the plant was working at full capacity each household would consume only 0.31 litres of cooking oil per year; i.e. almost a hundred times less than required.

As things are, however, the plant has never worked at full capacity. In the first place, the province has never grown enough sunflower to feed the plant. The plant can in theory use groundnuts but has in fact not done so. More importantly, the plant has had so many breakdowns that it has not been able to utilise all the sunflower currently being produced. Hence, the perenial cooking oil shortage persists.

Smaller hand-driven or diseil oil powered oil processing plants are extremely rare. Officials in the Provincial Planning Unit, the Provincial Agriculture Office, Marketing and Cooperative Office, and so on, could only recall one such small plant at Chikowa Catholic Mission in the Luangwa Valley, Chipata District.

Time did not allow the research team to go and talk to the Catholic Priest running this plant nor the local people who make use of the facility. However, it was learnt that the plant is very popular in this area where sunflower is a major crop. Payments are made in kind; a fifth of the oil produced is returned by the Parish as payment for the services.

Actual Requirements for Oil Processing

Katete oil mill has never satisfied the oil requirements of the Province. It is rather costly to transport sunflower from the far corners of the Province to Katete. Hence, the strong suggestion by many interviewers especially consumers that small-hand-driven or diseal powered mills be introduced, in much the same way as hammer mills. The oil plants should ideally be owned by either private businessmen and women or by the multipurpose cooperative societies which are doing a commendable job regarding hammer mills. Such small oil processing plants would readily benefit the local populations as it would make the much needed cooking oil available to them while at the same time providing

Table 1: No. of Farmers, Hectarage, Production Figures & Sales of Sunflower & Groundnuts

	Sunflower				Groundnuts			
Year	No. of Farmers	Hectarage	Production figures	Sales	No. of Farmers	Hectarage	Production figures	Sales
1981/82	10,883	10,268	98,575*	96,208	23,932	9,517	23,932	9,517
1982/83	27,909	19,00	299,00	298,607	20,073	18,745	20,974	18,745
1983/84	24,136	78,090	225,752	224,928	39,340	14,683	39,840	14,683
1984/85	23,813	30,649	222,560	218,193	33,493	13,932	80,469	23,502
1985/86	10,268	7,120	71,265	68,587	33,299	14,001	113,528	-
1986/87	Figures not available				Figures not available			48,000++

Note: * 50 kg bags * 80 kg bags ++ Estimate for 1988

SOURCE: Information from the 1986 Eastern Province Agricultural Annual Report and from discussion with PAO and his staff

a good market for their sunflower. There is no reason why sunflower prices should remain depressed as they now are. Once the prices improve, sunflower growing will also increase, so will oil production.

As these products are not marketed by any identifiable marketing agency, it is not possible to get even estimate production figures on them. The most one can do is to visit and talk to some of the farmers who produce them and to see for oneself the sizes of the orchards and vegetable gardens.

Most of the fruits and vegetables sold at markets are grown by small scale commercial producers who live within fairly easy reach of the Urban (Katete and Chipata) markets. Most of these vegetables and fruit producers grow them in addition to the other, oftentimes main, farming activities of cereal cultivation as well as livestock rearing. There are, however, a sizeable number of fruit growers whose sole economic activity is fruit-production. Four of the more prominent ones of these are around Katete Boma.

Vegetable and Fruit Sales

Most of the vegetables grown around Chipata and Katete are sold at the official markets in these two towns. The markets leave much to be desired. They need a real upgrading. Permanent structures which will accommodate most, if not all, of the vendors are required. These structures should have somewhere

to display the commodities being sold; cleaniliness must be assured. Most of the toilets are not working since they are blocked. At the Chipata town market people use the open bush area adjacent to the market as their toilets, thus spoiling the whole area with unpleasant smells and sights. Water at this market is drawn from a tap located in the same fouled-up open-bush toilet area. There is no electricity at any of the markets. One may argue that all business take place during the day and hence there is no need for electricity at least at the moment.

As if these deficiencies in the infrastructure of the markets were not enough, there are also the political party vigilantes who refuse entry into Chipata's main (Kapate) market and sometimes also the town market to all those without party cadres demand that vendors reduce the prices they charge for their commodities to absurd and uneconomic levels.

It is in this milieu that most of the vegetables and fruit are sold at Chipata and Katete markets. The two markets in Chipata were visited very early in the morning and again later in the evening. In the morning there were full with produce of all kinds: cabbages, rape, green beans, shelled beans and groundnuts, tomatoes, onions, carrots, sweet and irish potatoes, pumpkins, (no okra). The only type of fruit sold were bananas, oranges and tangerines. In the evening most of the commodities had been

sold. The few vendors who had not finished selling their commoditien spent the night at the market, if they happen to have come from far away. Then the following morning they finished selling everything.

Prices were very low in comparison to Lusaka prices. In the first place, Chipata markets like the majority of the markets in the country do not have scales. Hence prices are determined according to the visual size of the commodity. A head of cabbage which cost K3.00 in Lusaka cost K0.50 in Chipata; a heap of sweet potatoes going at K5.00 in Lusaka cost K2.00 in Chipata, Katete and also Nyimba.

Prices fluctuate according to season. May - July is the season of plenty while December to February are hit with big shortages in supply of market goods. The head of cabbage which currently sells at K0.50, we were told, goes at K3.50 during the December-January period. The four or five pieces of tomato that is selling at K0.50 sells at K3.00 in December - February. A heap of Irish potatoes which go at K2.00 in May-July goes at K5.00 in December-February, if at all it is available. Most of the other products experience similar price-fluctuations. Some of the rare exceptions being okra and green pumpkin leaves. The latter use in plentiful supply during the wet December-February months and almost non-existent in the dry months.,

Most of the vending at the markets is done by women. Access to formal employment is more difficult for women than it is for men. On the other hand entry into market vending does not pose a problem to anyone, except for the requirement of a UNIP party card which in most cases be obtained without difficult, either financial or otherwise.

"Large" Scale Fruit Sales

This section deals with those fairly large fruit producers who cannot find a market for their fruits in the Province. These include the four or so fruit-growers in Katete. In order to better grasp the issues involved here we will give a few details regarding one of these farmers and his operations. We have chosen not the largest or smallest producer of fruits but the one somewhere in between to represent the group. Presently the former has 10 hectares under fruit cultivation (largest farmer has twice this amount of land). His main crop is oranges, but he inter-crops with pine-apples and vegetables. Currently he has 4,300 orange plants about half of these are already productive. He hopes to have a total of 8,000 orange plants by the end this year when he will have finished covering all the 10 hectares with fruit trees. He will then continue to extent his fruit-farm. The 2,000 or so plants that are currently productive give him 50 tonnes of organges which he, like all the other fruit-farmers of his category, ferries his oranges the whole way to Lusaka where he sells it mostly to Muna Enterprises. He does not have his own vehicles and hence hires a truck to bring his oranges to Lusaka.

404

The two major problems this farmer and his colleagues meet are:

i) late payments for their produce

ii) transporting produce over a stretch of 500 kilometres from behind Katete to Lusaka

On the issue of late payments the research team was told that often times the fruit-farmers are tempted to shift to cotton or even maize where payments are not as late as the six or so months wait that they experience with their fruit sales. Occasionally they sell to Sunquick Bottlers limited who pays them promptly although the prices are not as good. The pine-apples, vegetables and any other mine crops the fruit-farmers produce find easy markets in the Provinces especially among the various institutions (army barracks, schools, hospitals, etc.) around Chipata and Katete.

Recommended Improvements in Fruit and Vegetable Production and Sales

Need to improve the physical instructure as outlined in 2.1. above.

Need to create a favourable social, political as well as economic environment under which the market vendors should operate.

Need to investigate the possibility of bringing into the province facilities /to process fruit into drink; Sunquick, or the multi-purpose cooperatives, or other businessmen could do this. The impression one gets while visiting the province is that there is a great demand for orange-drink, and if

these were produced within the province their supplies would be assured, prices might be low and some employment generated for the otherwise employed youths who tend to flock to the towns. Such an exercise will benefit:

i) the fruit producers as they will not have to travel the whole way to Lusaka to sell their produce.

ii) the local populations who will be assured of drinks hopefully at more favourable prices.

iii) the few people who will be employed to process the fruit into drinks.

NON-MAIZE CEREALS

Some rice, sorghum, cassava and soyabeans are grown in the provinces. Rice is grown especially in Chama district in the north while sorghum is the staple food of the Luangwa Valley people. However, except for rice and soyabeans production and sales figures are not available for the other crops. Soyabeans production is currently showing an increase in terms of numbers of farmers who grow it, hectarage that is being put into soyabean production each successive year, and the annual yields. Productivity in the case of the other crops is either static or going down: the latter case supplies especially to sorghum and cassava. This is partly due to lack of price incentives for

crops. The research team was also told that sorghum production in the valley was going down because of available processing facilities like hammer mills and other hand driven machinery tend "to favour" maize at the expense of sorghum and probably also cassava. The result of this, so Chipata based officials and other informants claimed, eating habits in the valley are changing from sorghum to maize, because the latter can very easily be processed by the various mills scattered in the predominantly sorghum eating region.

As information on these non-maize cereals was rather scattered and second-hand, and there was no time to go down to the valley or to Chama to see the hard facts for ourselves, no further attention was paid to these crops.

TRANSPORT OF AGRICULTURAL PRODUCTS AND INPUST

The following are what are being currently being used.

i) hired trucks to ferry fruit from Eastern Province to Lusaka, as already discussed above.

ii) bicycles to ferry one or two or at most three 50kg bags of vegetables from the producers or whole-sellers to the markets.

iii) "On the head" Women and sometimes, though very rarely women carry farm produce (maize, groundnuts, sunflower, vegetables and fruit from the farm home or to the market.

on their heads, or, in the case of men, on their shoulders. Cereal farmers who depend on this type of transport to bring their crops from the farm home can only produce for home consumption. Lack of transport militates against commercial productions.

iv) Wheelbarrows, although these are manufactured by the Katopola Agricultural Engineering services and by a few other Small Scale Entrepreneurs their use in ferrying market commodities or farm produce was not so obvious. One hardly saw a wheelbarrow as a means to ferry farmers' crops in the province. In view of the fact that less appropriate and convenient methods of transport ("on the human head, shoulders, and to an extent bicycles) are used, one may postulate that wheelbarrows are not widely used because they are not widely disseminated very few people own them.

v) Ox-drawn Scotch Cart. This is a very popular mode of transport, especially for the farm produce from the farm to the home. A number of people do own oxcarts; many more hire them from those who own them. There is a great demand for these carts but their supply is beset by the following problems.

a) Shortage of spores to manufacture scotch-carts; in particular wheels - both reams and types and tubes, and also wheel-bearings.

408

b) Scotch-cart manufacturers mostly concentrated around Chipata. Except for the Petauke Small Scale Enterprises who have taken over from Rucom Industries, there are hardly any manufacturers whose primary and exclusive purpose is to manufacture farm implements generally and scotch-carts in particular. The two institutions in Chipata, namely the GRZ-SIDA sponsored, Katopola Agricultural Engineering centre and the FAO sponsored Eastern Province Farm Mechanization Services' main functions are training and not manufacturing. These centres train in maintanance and repair of machinery. Some of the trainees are District Agricultural Engineering Officers, out of school youths. The latter are trained with a view to go out and set themselves up (in groups of three) and produce on their own the farm implements they have been taught to manufacture. Interviews with the personnel at Katopola revealed that very few, if any such groups have survived. The three that were looked at by the present author in May 1983 have since folded up.

Some of the informants regarded the fact that most of the trainers at Katopola are urban school drop-outs to be a major contributing factor to the lack of success in this venture.

Mtowe Small Scale Enterprises do produce farm implements including oxcarts. These are more successful, but here again the emphasis is on training and not on production. All the three institutions mentioned do sell some of what they produce but does not meet the demand.

Hence, the need to set up, or encourage those small scale enterprises working around markets and out in the remote areas to produce oxcarts. Once again, an inquiry into the possibility of some of the multipurpose cooperatives societies undertaking ox-drawn scotch-cart manufacturing as one of their commercial ventures. Some of them have already their ability to ran commercial ventures successfully.

c) Prohibitive Prices of the Scotch-cart

It was felt by the interviewees contacted that the oxcart was presently beyond the financial reach of the average farmer. Some people felt that this was partly due to the fact that producers are urban (Chipata) based and cater mainly to the fairly well-off farmers around Chipata and Katete who can afford these prices (K3,000 being the average).

The Cooperative Credit Scheme as well as Lima Bank should be more open to farmers who need to purchase oxen and ox-drawn equipment.

SUMMARY

In order to improve production and sales of the various crops discussed above some kind of DECENTRALISATION is urgently required Thus, there is a need to move away from the large Katete oil mill to smaller ones scattered throughout the province. There is need to have small workshops, like the one in Petauke who will produce farm implements, especially wheelbarrows and Ox-drawn carts. Processing of orange into orange drinks may more profitable be carried out at smaller plants scattered through the province. The Eastern Province Cooperative Union, instead of trying to do all these by itseld could encourage its primary multipurpose cooperative socities to undertake some of these ventures on a commercial basis. Private entrepreneurs, district councils and others can also be encouraged to embark upon these commcercial venture. Hammer mill should also process other cereals thus encouraging increased productivity of the cereals thus and continued diversification of the Zambian chief, crop, i.e. away from maize the other cereals.

The overall effects of such readajustments are obvious. Farmers will be more productive; transport bottlenecks will be reduced. Local populations of all income groups will have more food, drinks and servics easily available to them, thus improving upon their quality of life.

411

APPENDIX III

SOCIAL ANALYSIS - TERMS OF REFERENCE

OBJECTIVE

To obtain a written report (30 pages) which provides background social analysis for the ZAMS project design

SCOPE OF WORK

Relying on secondary materials and interviews in the Lusaka area, the contractor will provide a report with the following major sections:

Social-Cultural Content

This section should review the main social and institutional characteristics of Zambia as a whole insofar as they shed light on questions of commodity production and marketing. It is intended as background and introduction to the analytic sections which follow.

Distribution of Benefits

In preparing this section the contractor will do the following:

- The contractor will review the brief report on this question prepared by Fleuret, making changes and additions as necessary in the light of fuller knowledge and reading. A special attempt will be made to provide quantitative support for the general trends and processes identified.

- The contractor will in particular analyze the distribution of benefits on a provincial and/or district basis; on the basis of the producer categorization used by MAWD (large-scale commercial, institutional (i.e. schools, state farms), emergent commercial, traditional); and on the basis of gender.

- The contractor will also provide a complete discussion of the social and institutional organization of marketing for each of the major crops under consideration, identifying information gaps as precisely as possible for further study at a later point.

- Finally, the contractor will provide a quantitative analysis of the distribution of benefits among consumers, e.g. high and low-income urban dwellers, rural consumers, industries etc. As with the section above, it is recognized that this analysis will be hindered by lack of information but the intent is to point the way to needed studies which might be funded by the ZAMS project.

Participation

This section discusses provisions for ensuring that the views and needs of planned beneficiaries feed into the process of project implementation. Appropriate approaches might include

a project steering committee with representation from producer's and marketing organizations, special provisions for monitoring and feedback, end-user studies, and the like. The contractor will make practical recommendations based upon his/her understanding of the Zambian institutional environment.

Social-Cultural Feasibility

Based upon the material presented in Sections above, the contractor will make an assessment of the overall feasibility of the project, taking into account patterns of social organization and institutional performance in Zambia. The contractor will make a special effort at providing recommendations for improving the feasibility of the project if serious issues are identified.

Impact

The contractor will make a summary judgement regarding the likely impact of the planned project, being careful to distinguish differential impacts on the basis of region, socio-economic category, gender, and so forth. Where and possible, the contractor will formulate recommendations aimed at broadening and sustaining the impact of the project.

414

Relationships and Responsibilities

The contractor will be responsible to the contracting officer, USAID/Zambia, for performance of the work outlined in this Terms of Reference. The contractor will also be required to discuss findings and recommendations with the ZAMS project design team when they arrive in country.

APPENDIX IV

DOCUMENTS CONSULTED

AFRICARE/RDSB (1988), Kabompo Maize Mill Study: A Alternatives to increasing mealie output, Lusaka.

AGMMARK, (1988) Zams Minor Crops Study, Lusaka

CHILIVUMBO, A & KANYANGWA, J (eds.) [1984], Strengthening Women's Participation in Food and Agriculture Marketing, Rural Development Studies Bureau, Occasional Paper No.21.

CHINGAMBO, L.J [1982] Sun-Drying of Fruit and Vegetables at the Village and Household Level, RDSB/UNZA (1987)

COLIJN, A [1987] Sunflower Processing and its Use, TDAU/UNZA

GAILLARD, H.C.J.J. [1987] Socio-Economic Feasibility and Extension of the kit sunflower oil Processing Unit, Eindhoven, CICA, Netherlands

HONEYBONE, D & MARTER, A [1979], Poverty and Wealth in Rural Zambia, Communication No. 15. IAS/UNZA

ILO/JASPA [1981] Zambia: Basic Needs in a Economy Under Pressure, Addis Ababa

JANSEN, Doris J [1986] Comparative Study of the Political Economy of Agricultural Pricing Policies , Lusaka, Draft.

KANYANGWA, J & SHULA, E.C.W [1985], Peoples Participation Project: A Baseline Study, RDSB/UNZA

LOMBARD,C.S. & TWEEDIE, A.H.C.[1972], Agriculture in Zambia since Independence, Lusaka, NECZAM

MAIMBO, J.M. [1981], Constraints of vegetable Marketing in Lusaka Province and surrounding Areas, in Farming in Zambia Vol. 13, No.4.

MAIMBO, J.M. & EVANS, D [1976] The Supply and Marketing of Vegetables in the Lusaka Area, RDSB/UNZA

MARTER, A & HONEYBONE, D [1976] The Economic Resources of Rural Households and the Distribution of Agricultural Development, RDSB/UNZA

MWILA, C [1986], The Adoption of Improved Agricultural Technology on Farms in Zambia, Unpublished Ph.D. Thesis, University of Bradford.

NCUBE, P.D. (ed) [1983], Agricultural Baseline Data for Planning, NCDP/UNZA, Vol. 1.

NKANZA, D.K. [1987], Considerations in the Design and Manufacture of Low-cost oil expelling equipment for sunflower seed, TDAU/UNZA

TDAU/UNZA, [1986] Feasibility Tests of Hand-operated sunflower seed process in Zambia

TDAU/UNZA, [1987], Hand operated sunflower seed processing in Zambia

USAID/Zambia [1988] , Zambia Agricultural Marketing Support Project (PID)