POSSIBLE INNOVATIONS IN THE DELIVERY OF URBAN SERVICES IN METROPOLITAN BANGALORE INDIA

REPORT BY

George E. Hubler

CENTER FOR PRIVATIZATION
2000 Pennsylvania Avenue, NW - Washington, D.C. 20006

Project No. 74

July 1988

Prepared for the
BUREAU FOR PRIVATE ENTERPRISE
U.S. AGENCY FOR INTERNATIONAL DEVELOPMENT

The Center for Privatization was established in 1985 to provide expert advisory services to developing countries and their indigenous private sectors in planning and implementing programs to divest and privatize their state-owned or controlled enterprises and activities. The Center is fully funded under a major contract between Analysis Group, Inc. and the Agency for International Development. Participating subcontractor companies include:

Arthur Young & Co.
Equity Expansion International
Ferris & Company, Inc.
International Phoenix Corporation
Public Administration Service

The Center draws upon its consortium of six companies, and others when appropriate, to provide a wide range of qualified specialists in fields from agriculture, industry, financial and other services, transportation and utilities with experience in areas related to privatization, such as:

Corporate Restructuring
Employee Stock Ownership
Equity Placement
Financial Analysis and Valuation
Labor Relations
Legal and Regulatory Studies
Macro/Micro Economic Analyses
Marketing and Market Research
Project Design and Evaluation
Strategic Planning
Taxation

2000 PENNSYLVANIA AVENUE, N.W. ····· WASHINGTON, D.C. 20006

This Report was prepared under
AID Contract No. DPE-0008-C-00-5058-00 between
the U.S. Agency for International Development
and Analysis Group, Inc.

George E. Hubler, Principal Associate of Public Administration Service (PAS). He is a local government specialist who has directed PAS' organization and management systems practices since 1981. He formerly served as a city manager, budget director and public safety official in various cities in the United States. His federal service includes experience as a Civil Affairs and Military Government Officer in the United States Army. His private sector career includes service as a chief executive officer of a computer systems company.

POSSIBLE INNOVATIONS IN THE DELIVERY OF URBAN SERVICES IN METROPOLITAN BANGALORE INDIA

REPORT BY

George E. Hubler

CENTER FOR PRIVATIZATION
2000 Pennsylvania Avenue, NW - Washington, D.C. 20006

Project No. 74

July 1988

Prepared for the
BUREAU FOR PRIVATE ENTERPRISE
U.S. AGENCY FOR INTERNATIONAL DEVELOPMENT

TABLE OF CONTENTS

Page

I. SCOPE OF SERVICES.....

II. METHODOLOGY.....
Scan of the Environment..... 3
The Setting/Demographics..... 4
Governmental Structure..... 4
The Private Sector and the Delivery of Urban Services..... 5
Overall Issues and Problems..... 8
..... 9

III. IDENTIFICATION OF FEASIBLE URBAN SERVICES DELIVERY ENHANCEMENTS THAT ARE CANDIDATES FOR FURTHER STUDY.....
Possible Private Sector Initiatives..... 15
Initiative 1. Alternate Water Supplies..... 15
Initiative 2. Using the Private Sector to Reduce Heavy Traffic in the Central Business District..... 15
Steps Toward Privatizing the Truck Stop Concept..... 19
Initiative 3. The Uses of the "Twinning Concept" to Improve the Area's Urban Database and Upgrade Private Sector Technology..... 19
Steps to Implement the Twinning Concept and the Private Sector Efforts to Improve the Land Database..... 20
Initiative 4. Use of the Private Sector in Municipal Maintenance..... 21
Step to Implement the Municipal Maintenance Concept..... 22
Technical Assistance..... 22
Summary..... 23
..... 26

REFERENCES..... 27

ACKNOWLEDGEMENTS..... 29

EXHIBITS

Tables

1. Historical Data and Projections of Water Supply and Demand..... 11

2. Housing Production/Shortages..... 12

TABLE OF CONTENTS (continued)

APPENDICES

A. Terms of Reference for the Bangalore Urban Privatization Study

B. List of Key Persons Interviewed/Contacted

C. Mysore Chamber of Industry Strategies to Augment Bangalore's Water Supply for Industrial Use

D. Bangalore Water Supply and Sewerage Board Project Appraised on Secondary Use of Water Plant

I. SCOPE OF SERVICES

The complete terms of reference for this assignment are in Appendix A. In summary, they include investigating and reporting on feasible innovations in the financing, management, and delivery of urban services in Bangalore. This preliminary or reconnaissance study will focus on the possible participation of the private sector in urban services delivery. If appropriate, these innovations can be studied in more detail in subsequent study efforts.

More specifically, in accordance with the terms of references provided by the Mission, this brief study is intended to serve several purposes:

1. To define the broad parameters of a potential privatization activity in the context of urban services delivery in Bangalore.

2. To determine whether there is scope for a USAID-funded project in this field, using either Housing Guaranty (HG) or other funds.

3. To demonstrate whether development issues related to industrial growth can be addressed through an urban services improvement program.

This study does not consider the provision of dwelling units since the Bangalore Development Authority is already examining private participation in the production of housing. The study does, however, comment on privatizing management of facets of the housing program and servicing the land.

II. METHODOLOGY

The basic methodology used in carrying out this "privatization reconnaissance study" had three elements:

1. Scan the environment. In this study element, the consultant reviewed the environment in which urban services delivery agencies operate in Bangalore to determine possible impediments to improving service delivery, especially as relates to private sector participation in its delivery.

2. Identify overall issues and problems. In this study element, using structured interview techniques and normative group processes, the consultant met with over 35 key public and private sector decision makers in the Bangalore metropolitan area, with national authorities on urban service delivery, and with representatives of the private sector. A partial listing of the individuals the consultant met with is in Appendix B. An attempt was then made by the consultant to prioritize these issues, problems, and needs keeping in mind possible constraints in the environment to meeting these

needs through improved delivery techniques, privatization initiatives, and joint public/private sector undertakings.

3. Identify feasible urban service delivery enhancements that are candidates for further study. In this final study step, feasible approaches to improving urban service delivery, with an emphasis on private participation, are outlined. It is stressed that these initiatives are just "possibilities" at this point.

Scan of the Environment

The Setting/Demographics

The City of Bangalore is the administrative, commercial, educational, and transportation center of the State of Karnataka and is the gateway to the southern peninsula. As a transportation center, it is at a juncture of the highway, rail, and air networks in this part of India.

Due to Bangalore's tradition as a model city, reputation as a desirable place to live, industrious populace, and good climate (all causing high immigration from adjourning states), it has grown phenomenally. Growth rates over the last 20 years are 7.6 percent per year, with the present

population exceeding 4 million. Population is expected to exceed 8 million people by the turn of the century. As noted, this increase in population includes the in-migration from the surrounding countryside, largely from the neighboring States of Tamilnadu, Andra Pradesh, and Kerala. Thus, this "garden city" is in danger of losing the quality of life that has made it attractive.

Governmental Structure

The basic urban service delivery agency is the Bangalore City Corporation (BCC) which was established in 1949 with current powers assigned to it by the Karnataka Municipal Corporation Act of 1976 (as amended). This act spells out the "obligatory" and "discretionary" functions of the corporation and its sources of revenue. Key powers and functions of the corporation include the regulation and provision of services such as streets, buildings, transport, water supply, and storm drainage; promotion of public health, safety, and convenience; prevention of diseases; and the abatement of nuisances.

To generate revenue, the Corporation, with the prior approval of the State, can levy taxes such as property taxes; taxes on carriages, carts, and animals; a toll on non-motorized vehicles; advertisement taxes; sanitary assessments; a water rate tax; and taxes on professionals. In addition, the corporation can collect fees such as shop and stall fees; tobacco licenses; building fees; hotel and tax fees; parking fees; and birth and death registration fees. The BCC can also enforce various fines and penalties.

In actual practice, however, the revenue-generating capacity of the Corporation has shrunk since the abolishment of the octroi on animals and goods and the placement of certain limitations on sharing in motor vehicle licensing revenues. Finally, the assessments for property taxes and tax collections do not reflect the real market value of property.

Another key organization in the metropolitan area is the Bangalore Development Authority (BDA) which came into being based upon a January 1976 act of the state legislature. This agency has extensive planning and development powers including:

- Comprehensive land use planning, development planning, and town planning.

- Land acquisition, development schemes, and housing schemes.

- Development control through the enforcement of the comprehensive land use plan (and supporting codes) and the power to implement development schemes.

- Direction of other authorities and agencies connected with development activities.

- The provision of urban services (including maintenance) in development site areas before they are turned over to the BCC.

- Coordination/facilitation between the BDA and the BCC which includes stipulations that the Corporation must perform its functions with respect to land use and development with the concurrence of the BDA. The revenue generating capabilities of the BDA are primarily linked to servicing and handling of land assets.

In addition to the BCC and BDA, there are special agencies and authorities for special urban functions such as the Bangalore Metropolitan Region Development Authority (BMRDA), Bangalore Water Supply and Sewerage Board (BWS&SB), the Karnataka State Electric Board (KSEB), the Karnataka State Road Transport Corporation (KSRTC), the Housing and Urban Development Department, the Chief Architect, the Directorate of Health Services, the Karnataka Housing Board, and the Slum Clearance Board among others. While the BDA informally coordinates the activities of these specialized agencies, our interviews, observations, and review of the literature (such as "A Study of the Corporation of the City of Bangalore" by M. Nageswara Rao) reveal that this proliferation of special authorities and agencies impedes integrated operations and effective service delivery. Professor Rao, described these agencies as "basically lacking coordination among themselves and the city corporation." Those interviewed, both individually and in group session, mentioned this as a problem that needs to be addressed.

An effort was made in 1985 to facilitate coordination of all of the above-mentioned organizations with the creation of the Bangalore Metropolitan Region Development Authority (BMRDA). The BMRDA was created under Karnataka Act No. 39 of 1985 and actually came into existence on February 1, 1986. This organization has the charter to act as the planning and development authority for the entire Bangalore Metropolitan Region. One of its tasks is to coordinate the work of the previously mentioned agencies and departments concerned with the development of Bangalore. Our brief observations and discussions indicate that the BMRDA has not materially improved the agencies' control, command, and coordination problems.

The Private Sector and the Delivery of Urban Services

Bangalore is fast gaining a reputation in Asia as India's science or "high tech" city and has great potential for continued growth of high technology. The area's economic position, its educational institutions, its environment, and its tradition for innovation/industry have positioned it for growth in the high tech area, with an emphasis on small firms.

Unfortunately, the capabilities of the private sector have not been utilized in any comprehensive or planned fashion to augment, supplement, or improve the delivery of urban services. On the other hand, extensive urban services are required to support the "take off" of the City of Bangalore and the State of Karnataka if they are to fulfill their potential.

While certain private sector initiatives have been discussed in areas such as private support of the secondary use of water (see Appendix C for a discussion of the Mysore Chamber of Industry's effort), they have not been implemented. In part, this may be due to the proliferation of the special authorities and boards previously mentioned and their desire to maintain the status quo.

Overall Issues and Problems

Our "scan of the environment" in the Bangalore metropolitan area revealed the following major problems:

- Water Shortage. The interviewees unanimously identified deficiencies in water supply as the major problem in the Bangalore area. Physically, Bangalore is located some distance (over 100 kilometers) from perennial sources of water and is on a high elevation requiring high-head pumping. This, coupled with very large population increases, has resulted in the high cost of the production and distribution of water from principal sources such as the Cauvery and Akavathi pumps.

A number of capital projects are planned to alleviate this critical problem. They include open canal access and improved techniques to increase direct supply and improvements in treatment as well as a separation of lines for potable and nonpotable water and for the secondary use of water largely for industrial purposes.

Even with these projects, however, historic data and projections of water supply for Bangalore provided by the Bangalore Water Supply and Sewerage Board (BWS&SB) show the critical water shortage increasing year by year through the turn of the century despite the implementation of the third phase of the Cauvery source project. These data are shown in Table 1, which shows a deficit of 1375 million liters per day by the year 2000. These could be conservative estimates since expert agencies predict that further development of irrigation in the Cauvery River and its tributaries could considerably reduce the water available to Bangalore and thus worsen the deficit situation shown in the following table.

Table 1

HISTORICAL DATA AND PROJECTIONS OF
WATER SUPPLY AND DEMAND

Year	Gross Demand (MLD)	Gross Supply (MLD)	Shortage (MLD)
1985	1017.65	435.00	582.65
1990	1344.12	705.00	649.12
1995	1691.18	705.00	986.18
2000	2025.30	705.00	1320.30
2001	2080.59	705.00	1375.59

In summary, by any standard, water supply is the critical problem for Bangalore and the situation is not improving.

- Provision of Housing. Even though the Comprehensive Development Plan for Bangalore recognizes the need for additional housing units and the BDA is actively producing many layouts and sites, the BDA projects that the shortages shown in Table 2 will pertain by the year 2001.

Table 2

HOUSING PRODUCTION/SHORTAGES

Year	Population in Lakhs	House	Required Number of Houses	Provision	Shortage
1991	45.00	6,93,000	2,21,127	2,00,000	46,127
2001	70.00	10,25,000	3,32,000	2,25,000	1,07,00

In a paper presented to the National Symposium on Planning and Development of Metropolitan Bangalore in March 1987, Professor L. R. Vagale estimated that the total housing backlog in Bangalore "is now of the order of 80,000 to 1,00,000 units with the provision of shelter for the lower income households not receiving adequate attention. Consequently, slums and shanties are proliferating; and over 25 percent of the households are living in substandard dwellings. Unauthorized constructions are numerous." In summary, housing shortages could exceed one million units shortly after the turn of the century.

- Traffic and Transportation Flow. Vehicle density per capita in Bangalore is one of the highest in India with one vehicle per 10 persons. Public safety and traffic engineering personnel report that the number and

severity of traffic accidents are extremely high. For example, while the Bangalore metropolitan area occupies 0.09 percent of Karnataka and has approximately 7.9 percent of its total population, it accounts for 40 to 45 percent of the total number of vehicular accidents with a high number of fatalities.

Programs to alleviate the problem, including traffic engineering, signalization, and the construction of circular roads, have not helped the problem. Key officials interviewed all supported an integrated transportation system to include rapid rail, light rail--using certain of the existing rail bed (complicated by the inclusion of both narrow and wide gauge track), and a fly-over system. These officials, however, also acknowledge the staggering cost of this integrated approach and are aware of the difficulty of achieving it without outside help. The developed nations have found that capital costs for such major projects require massive federal subsidies, and operating costs for rapid rail cannot be met through "fare box collections." For example, the Washington, D.C., area rapid rail system and capital programs costs exceeded $13 billion (with initial estimates of only $3 billion) with operations being subsidized up to 80 percent by subsidies from the local government property tax base.

- Sewerage and Solid Waste Disposal. Much of the metropolitan area is not served by an underground sewerage system. This is complicated by the fact that the City Corporation of Bangalore does not have the rolling stock or facilities to transport and dispose of the 1,800 to 2,000 tons of solid waste generated daily in the metropolis.

- Lack of a Database to Deal with Problems. In developed nations, over 90 percent of the decisions made in planning for and providing urban services are land based, yet there generally is no effective land database to support these decisions. In our interviews with key Bangalore and Karnataka officials (such as the Chairman of the Karnataka Electric Board and the Commissioners of the Bangalore City Corporation) the need was stressed for improved mapping and geographic information systems to serve as the basis for decision making.

III. IDENTIFICATION OF FEASIBLE URBAN SERVICES DELIVERY ENHANCEMENTS THAT ARE CANDIDATES FOR FURTHER STUDY

In this section of the report, we will discuss possible solutions to Bangalore's crucial problems of water supply, transportation, housing, and the provision of effective administrative and support systems.

Since the principal focus of this brief study was privatization, we will divide our discussion into those "solutions" that involve private sector initiatives and those that involve other initiatives. The initiatives are in order of priority.

Possible Private Sector Initiatives

Initiative 1. Alternate Water Supplies

As addressed in Section II, the Bangalore area has a seriously deficient water supply. Even with planned initiatives to obtain additional water from the Cauvery and Akavathi Rivers, the situation will continue to worsen with shortages exceeding 1,375 million liters per day projected for the turn of the century.

Accordingly, alternate ways to provide usable water must be found. These alternatives include a definite role for the private sector.

- The primary alternative is the secondary use or recycling of water. Estimates reflect that 70 to 80 percent of the City's water supply is returned as wastewater with no present use. With current technology, this wastewater could be reused with advanced secondary or tertiary treatment for industrial uses such as cooling, boiler feeding, processing, air conditioning, sanitary uses, fire protection, and vegetation upkeep.

Estimates are that the cost of such a treatment facility with a 50 MLD capacity would be 1500 lakhs distributed over three years as follows:

1989	400 lakhs
1990	700 lakhs
1991	400 lakhs
	1500 lakhs

It is estimated that the physical plants could be bonded and pay for themselves over the 20-year life of the bonds. This secondary use of water is not now being done by anyone, and it is a natural for private sector participation.

In fact, the Greater Mysore Chamber of Industry approached government officials at one point with an offer to have the private sector lead the way in a recycling of water effort. This approach was not taken, and it now appears that all concerned are looking to the government to address the issue.

For background purposes, Appendices C and D, respectively, contain papers on the secondary use of water prepared by the Mysore Chamber of Industry and the Bangalore Water Supply and Sewerage Board.

- Rain water harvesting is an alternative way of increasing the water supply, where the private sector could lead the way, is in rain water harvesting by harnessing storm water drainage. This would have the ancillary effect of alleviating flooding in the rainy season and could also relieve the problem of overloaded sewer lines.

No formal authority would be necessary to implement this effort. All that would be needed is industry's awareness of rain water harvesting's benefit and informed decision making on land use by municipal corporation and development authority officials.

- <u>Steps toward implementing alternate water supplies.</u>

1. The first step would be a follow-on effort in the way of a feasibility study to develop a financial, legal, and business plan to demonstrate how the private sector could participate in water recycling projects.

2. The second step (actually it would be carried out concurrently with Step 1) would be to meet with the Greater Mysore Chamber of Industry, the Bangalore Water Supply and Sewerage Board, and the Bangalore Development Authority to try to achieve support for undertaking this project as a private venture. Its technical, legal, and financial feasibility (as developed in Step 1) would be emphasized to all parties.

3. An effort would be made to involve funding sources, such as the World Bank, in the project. The private sector's participation could make the project more attractive to the Bank.

Initiative 2. Using the Private Sector to Reduce Heavy Traffic in the Central Business District

The problems of severe traffic density and a high accident rate were previously discussed. Likewise, the high costs of integrated transportation systems and how these costs could deter actions on rapid rail and similar projects were emphasized.

One other approach already in the final planning stage is the development of "truck terminals" at strategic locations where large trucks would stop, be off-loaded, and maintained. These stops will also have facilities for drivers such as restaurants, showers, toilets, sleeping facilities, etc. The off-loading would be to smaller vehicles that would have direct routing to the customer in the central city.

This concept is well suited to private sector participation.

Steps Toward Privatizing the Truck Stop Concept

1. The first step would be to notify officially Mr. G. S. Melkote, BMRD, of the U.S. Agency for International Development's interest in assisting in getting this project started as a private venture, with the government perhaps making an in-kind contribution of land.

2. Should Mr. Melkote respond positively, the next step would be the development of a business plan to include an approach to obtaining private capital and sponsorship.

Initiative 3. The Uses of the "Twinning Concept" to Improve the Area's Urban Database and Upgrade Private Sector Technology

In the past, USAID has fostered the concept of twinning (sometimes generally referred to as "sister cities") to transfer technology from U.S. cities and counties to local governments in developing nations.

As previously noted, the Chairman of the Karnataka State Electric Board, in a meeting of key officials, indicated that the land database (maps and geographic information systems) was poor, and he solicited assistance. Those in attendance generally agreed that this is a serious problem.

The improvement of urban databases could be explained in a follow-up study that encompasses both the twinning concept and that of private sector involvement. By way of illustration, the following could occur. The U.S. government could ask a U.S. local government that has an effective computerized mapping and geobase system to consider working with Bangalore in a twinning program to "transfer" the general mapping concepts and systems design. The fairly sophisticated small computer companies in Bangalore could then be called upon to develop the software/technology for the Bangalore Corporation, the Bangalore Water Supply and Sewerage Board, and the State Electric Board for a fee. This model mapping package could then be marketed by the private sector throughout India.

Steps to Implement the Twinning Concept and Private Sector Efforts to Improve the Land Database

1. Step 1 (subsequent to the approval of the concept) would be for a U.S. organization to earmark U.S. cities and counties tentatively willing to participate. Public Administration Service (PAS), of which the author of this report is a staff member, could do this since we specialize in local government management systems consulting in the United States, and internationally.

   The costs to a sponsoring agency for the use of experts from U.S. local governments is usually a small stipend and travel expenses.

2. Step 2 would involve getting one of the Bangalore public organizations to commit to participate.

3. Step 3 would be to develop a full proposal to include confirming which private sector Bangalore computer companies would "bid" to participate.

Initiative 4. Use of the Private Sector in Municipal Maintenance

After the Bangalore Development Authority (BDA) completes site development, areas are turned over to the Bangalore City Corporation (BCC) for maintenance. Frequently, the BCC is not ready (due primarily to funding limitations) to take over the maintenance and upkeep of these areas in functions such as road maintenance, storm drainage upkeep, solid waste removal, etc.

This is an opportunity for the private sector to form "municipal maintenance companies" to take over and manage these functions for a profit (to be paid as a service fee by the occupants of high and moderate income areas and/or by a payment from the BCC).

A pilot project for this concept could be undertaken in an area now under development by BDA for high income "nonresident" Indians in a development known as Lakeside Estates. This is an appropriate site since this area's residents will probably desire a high level of service and be willing to pay for it.

If the above pilot works, it could be extended to other areas, and the private sector company winning the contract could be called upon to provide services such as pure water and sanitary facilities to poorer areas of the City.

Step to Implement the Municipal Maintenance Concept

At this point, the only step recommended is to ask the Chairman of the BDA if there is interest in the approach. If there is interest in the project, proposals should be drawn up.

Technical Assistance

In addition to the aforementioned private sector initiatives, the USAID should consider certain technical assistance that would improve urban service delivery in Bangalore. This assistance is summarized below:

1. Technical Assistance to Cope with the Proliferation of Public Agencies, Authorities, and Departments in the Bangalore Area. In individual interviews with key Bangalore metropolitan area administrators and decision makers and in a group session chaired by Dr. H. G. V. Reddy of the Bangalore Development Authority, there was strong consensus that the proliferation of separate public agencies and authorities created problems of coordination and control. In fact, the consultant was asked to suggest ways to overcome this problem.

   (Note that the group session referred to above is important, because it was attended by key officials such as the Chairman of the Karnataka State Electric Board, the Commissioner of Bangalore City Corporation, the Chief Architect of the State of Karnataka, the Vice

Chairman and Managing Director of the Karnataka State Road Transportation Authority, a representative of the Chairman of the Bangalore Water and Sewer Supply Board, and their staffs.)

In short, this is an area in which technical assistance has been requested by local officials since they feel it is important.

The first step in providing this assistance would, of course, be for USAID to determine its interest. If USAID is interested in it as a project, private U.S. companies (such as PAS) could be called upon to prepare proposals for the agency's consideration. This effort would likely require the services of a consultant skilled in analyzing the legal documents that established these organizations and a management/ organization consultant skilled in working with groups to attain consensus. Approximately a 60- to 70-day professional services consulting effort would be required.

2. Improving Property Assessments and Tax Collection. Subsequent to the abolition of the octroi, the most important source of revenue is the property tax, which now accounts for more than 50 percent of total local government tax revenues. Unfortunately, it is based upon an assessment system that is faulty, with assessments not approaching real market value.

While this problem has been recognized since the 1960s, this could be the appropriate time to address it because of the shortage of local government revenues for the provision of basic services. This would be one way to increase local revenues fairly and equitably.

This issue obviously has wider application than Bangalore and should be taken up with national officials. If they have interest in obtaining technical assistance, it could be proposed on a trial basis in a state/city.

In a related field (tax and fee collection), local officials in Bangalore could be contacted to see if they are interested in privatizing collections. This could build upon the current experience of the Bangalore Water Supply and Sewerage Board in allowing customers to pay their utility bills at banks.

Assessments and tax collections are, of course, politically sensitive issues. Perhaps the best way to proceed would be to provide our independent comments on these matters to local and national Indian officials. If there is no expression of interest, the matter can be dropped.

Summary

In summary, this reconnaissance study established (through a document review and individual and group interviews with key Bangalore officials in the public and private sector) that the most crucial problems facing this metropolitan area are water supply, transportation, provision of housing, sewage disposal, and solid waste disposal. Additionally, local officials stressed the need for coordination and control of the many agencies involved in the Bangalore area and for an urban service land database as areas in which they would consider advice and assistance.

In the final section of this brief report, a few action-oriented ways that the public and private sector could work to alleviate problems were mentioned and highlighted as areas for possible follow-on study to be considered by USAID and the local officials concerned.

REFERENCES

In preparing for this report, the writer has drawn heavily from the following documents:

Municipal Taxation in Karnataka: A Review, dated January 1985, by Professor M. Nageswara Rao.

National Symposium on Planning and Development of Metropolitan Bangalore, dated March 27, 28, and 29, 1987, Bangalore Development Authority.

BDA--A Profile, dated September 20, 1985, Bangalore Development Authority.

A Study on Corporation of the City of Bangalore, dated August 1985, by Professor M. Nageswara Rao.

Bangalore 2000--Some Imperatives for Actions Now, dated October 9 and 10, 1987, by the Times Research Foundation.

Essays on Bangalore, Vol. 1 and Vol. 2, conveyed by V. Vyasulu and A. K. N. Reddy and sponsored by the Karnataka State Council for Science and Technology, dated August 1985.

Comprehensive Development Plan and Plan Report, published by the Bangalore Development Authority, 1984.

Strategies for Bangalore City's Water Supply--Particularly for Industrial Use, developed under the auspices of the Greater Mysore Chamber of Industry.

Seminar on Urban Management and Finance for South Asian Countries, dated December 6-11, 1987, by the National Institute of Urban Affairs.

International/Regional Workshop on Public and Private Initiatives in the Delivery of Urban Services, April 18-22, 1988, by the National Institute on Urban Affairs.

Public and Private Initiatives in the Provision of Urban Service and Infrastructures: Calcutta Experience, dated April 15, 1988, by Shri S. K. Roy.

ACKNOWLEDGEMENTS

Background information related to the status of privatization initiatives and urban service delivery in India furnished by Dr. Om Prakash Mathur, Director of the National Institute of Urban Affairs, was very helpful in setting the scene for this report.

In addition, briefings by Robert W. Beckman, Assistant Director, Office of Technology Development and Enterprise, USAID, New Delhi, and by Michael Lee of his staff, related to recent technology initiatives and their relationship to privatization, equipped the consultant with a comprehensive perspective on USAID's current efforts. Mr. Adarsh S. Puri of the USAID staff arranged for on-site interviews and facilitated the study process in Bangalore. His enthusiastic efforts made it possible to interview an unusually large number of officials in a short time.

The all-out effort by Dr. H. G. V. Reddy, Chairman of the Bangalore Development Authority, to provide access to key decision makers and necessary data really made this report possible and is deeply appreciated by its author.

Finally, the kindness exhibited by the Chief Minister of Karnataka, Ramakrishna Hedge, and the time he took from his busy schedule to meet with the author and USAID personnel were highpoints of the study and helped greatly in forming final recommendations.

Appendix A

TERMS OF REFERENCE FOR THE
BANGALORE URBAN PRIVATIZATION STUDY

Terms of Reference for Mr. George Hubler, Bangalore Urban Privatization Consultant

Purpose

Mr. George Hubler will investigate and report on the scope for feasible innovations in the financing, management and delivery of urban services in Bangalore. His work will focus on, but will not necessarily be limited to, possible participation of the private sector in urban services delivery.

Background

For the last two years, USAID has been involved in an experimental program with the business, academic and government communities of the State of Karnataka to find ways in which the considerable scientific and technological capability of the State can become a springboard for long term accelerated growth of the State's economy. That work has now progressed to the stage at which USAID is actively involved in the preparation of a project to support a Center for Technology Development. The purpose of that project would be to "help create and sustain the climate and processes which will increase the development of technology and increase its use, mainly by small and medium scale, privately owned industries - an effort initially focussed in the State of Karnataka".

In the course of developing that project, USAID has become increasingly involved in discussions on the urban sector in Karnataka: both insofar as there is an interface between urban development and technology development, as a free standing concern. USAID made presentations at a number of forums in Bangalore during 1987, at which interest was shown by public, business and academic interests in ways in which the private sector could participate in the delivery of urban services. Subsequently, there have been expressions of interest in the potential of urban privatization from various sources at the national level. A recent example of this was a seminar hosted by the National Institute of Urban Affairs, New Delhi, which was assisted by USAID.

Statement of Work

The present mission is intended to serve several purposes:

(a) it would seek to define the broad parameters of a potential privatization activity in the context of urban services delivery in Bangalore.

(b) it would determine whether there is scope for a USAID-funded project in this field, whether using Housing Guaranty (HG) or other funds; and

(c) it would demonstrate whether there is potential for addressing development issues related to industrial growth through an urban services improvement program.

Attention will be paid to possible future roles for USAID, whether through a future HG project or using some other developmental mechanism. Mr. Hubler should be aware of the possibility of utilising UNCHS (Habitat) resources for project preparation.

The sectoral scope of Mr. Hubler's enquiries will include those services normally provided by the Bangalore Development Authority (BDA), the Bangalore City Corporation and the Bangalore Metropolitan Region Development Authority. The scope of the study will exclude the provision of dwelling units, since the BDA is already actively exploring private participation in the supply of housing. (It is likely, however, to include the servicing of land for housing.) It will also exclude the supply, treatment and mains supply of water and sewerage, in view of the reluctance of the responsible authority to engage in discussions with donor agencies.

Mr. Hubler will spend the first day of his mission in Delhi, to receive a briefing and to review the available literature. He will then travel to Bangalore to meet with appropriate officials of the state government and local authorities. So far as possible, preliminary meetings will have been arranged for him, but it will also be necessary for Mr. Hubler to make subsequent arrangements dependent on the outcome of the initial meetings. While in Bangalore, Mr. Hubler will be accompanied and assisted with logistic arrangements by Mr. Adarsh Puri, of USAID's Directorate for Technology Development and Enterprise.

He will travel to Bombay for one day to meet the Chief Executive of Infrastructure Leasing and Financial Services Ltd., and to determine whether there is any interest on the part of this new company in assisting with a privatization exercise or otherwise working with AID in an urban services delivery program.

Mr. Hubler will return to Delhi for the final day of his mission, to brief the Mission and to complete his report.

Reporting Requirements

Mr. Hubler will prepare a short report on his findings and recommendations before the end of his mission. He will also brief the USAID Mission in Delhi on his conclusions.

Appendix B

LIST OF KEY PERSONS INTERVIEWED/CONTACTED

LIST OF KEY PERSONS INTERVIEWED/CONTACTED

Name	Title
Mr. Ramakrishna Hedge	Chief Minister of Karnataka
Dr. H. G. V. Reddy	Chairman, Bangalore Development Authority (BDA)
Dr. Om Mathur	Director, National Institute of Urban Affairs
Mr. G. Aswathanarayana	Engineer Member, BDA
Mr. A. Lakshmana Reddy	Deputy Director, Town Planning, BDA
Mr. A. S. Melkote, IAS	Metropolitan Commissioner, Bangalore Metropolitan Region Development Authority (BMRDA)
Dr. Vinod Vejasulu	Indian Institute of Management
Mr. D. D. Rudrappa	Chairman, Karnataka State Electric Board (KSEB)
Mr. P. S. Naperajan	Commissioner, Bangalore City Corporation (BCC)
Mr. S. Naparaj	Secretary to Government, Housing and Urban Development
Mr. T. A. Jass	Chief Architect to the Government of Karnataka
Mr. D. B. Prabhr	Vice-Chairman and Managing Director, Karnataka State Road Transport Corporation (KSRTC)
Mr. M. Chittaranjana, DAS, IAS	Chairman, Bangalore Water Supply and Sewerage Board (BWS&SB)
Mr. S. Swatantra Rao, IAS	Commissioner, BDA
Mr. Lakshmana Reddy	Town Planning Member, BDA
Mr. H. Sbrananya	Finance Member, BDA
Mr. Chandrabeerthi	Town Planning
Mr. T. Thimme Gowda	Secretary, BDA

Name	Title
Mr. K. T. Srimeras	Assistant Director, Town Planning
Mr. C. N. Nanjundappa	Engineering Department, BDA
Mr. D. R. Rawadas	Engineering Department, BDA
Mr. Varkatugranny	Engineering Department, BDA
Mr. G. R. Sarma	Past President, Confederation of Engineering Industry, Southern Region (CCEE-SR) and Managing Director AEG-NGEF, Ltd.
Mr. Philipose Matthai	Secretary to Government of Karnataka Commerce and Industry Department
Mr. G. S. Chenny	Area General Manager, Hotel Ashok
M. Nageswara Rao	Associate, Institute for Social and Economic Change (ISEC)
R. Viskhanattan	Greater Mysore Chamber of Industry
C. N. Nanjundappa	Engineering Officer, Ex-Officio Director of Estates, BDA
Mr. B. Ramakrishna	Superintending Engineer, Bangalore Water Supply and Sewerage Board (BWS&SB)
Mr. S. Swatantra Rao, IAS	Bangalore Development Authority
Mr. H. S. Puttakempanna	Commissioner, Chief Engineer, Bangalore Water Supply and Sewerage Board
Mr. T. D. Abhayarumar, KAS	Assistant Commissioner, Bangalore Metropolitan Region Development Authority
Mr. B. N. Thyagaraja	Chief Engineer, Bangalore Water Supply and Sewerage Board
Mr. K. T. B. Achar	Regional Chief, HUDCO
Mr. B. K. Chakraborty	Chief (Projects), HUDCO
Dr. C. N. Prahlad	Executive Director, Indian Society for Environmental Studies

Appendix C

MYSORE CHAMBER OF INDUSTRY STRATEGIES TO AUGMENT BANGALORE'S WATER SUPPLY FOR INDUSTRIAL USE

.E STRATEGIES TO BANGALORE CITY'S WATER SUPPLY PARTICULARLY FOR INDUSTRIAL USE

3RD FLOOR, REAR BLOCK, SHERIFF CHAMBERS,
14, CUNNINGHAM ROAD, BANGALORE-560 052

THE GREATER MYSORE CHAMBER OF INDUSTRY
3rd Floor, Rear Block,
Sheriff Chambers
14, Cunningham Rd.
BANGALORE-560 052

1. Introduction

Water supply has become an important lifeline in any urban environment. All our activities come to a standstill if water is not available. The effect of growth of an urban ecosystem on water supply is direct and is felt immediately. Whereas one can live with reduced comforts, as far as other basic requirements like shelter, education, transport, energy, etc., are concerned, one cannot find life easy if water is not available to meet his basic needs. The dependence of man, business, industry, gardening and other activities on municipal water is total, that no alternatives are developed until a crisis develops. Another aspect of water supply to urban areas is the discarding of traditional sources (like wells, tanks, ponds, etc.) and to put our total faith on rivers.

Parameters like the growth rate of a city and planning of various subsystems like markets, services, amenities, housing colonies, etc., are closely inter-linked with the development of water supply systems.

Urban water supply systems gradually developed with increasing complexity starting from traditional individual/community wells supplying water for the domestic needs. Today's systems are quite large, obtaining bulk water from far-off sources like rivers and transmitting it to local storage reservoirs. A complex distribution system takes over from these reservoirs supplying water to various areas comprising of different types of consumers.

The various stages in urban water supply development are :-

...2

(i) Piped and 'protected' water supply resulting in the convenience of usage. (An urban housewife opens a tap in her sink in the kitchen when she wants water, whereas her counterpart in a village may have to undertake 2-3 trips per day to collect water from a source like well, handpump or pond, normally situated at a distance of 0.5 to 1 kilometer from her house);

ii) Lakes or tanks to tap rain water along with a rain water drainage system;

iii) Closed-type reservoirs - both ground level and overhead ones - to store water for a shorter period - say a day or two;

iv) Pumphouses to pump water to individual households;

(v) Purification systems like filter beds, chlorination, etc;

(vi) Transmission pipelines bringing water from a far-off source to a city;

(vii) Waste water systems;

(viii) Recycling plants;

(ix) Ground water tapping;

(x) Monitoring the opening and closing of valves, maintenance of water quantity and pressure at customer's end.

Water usage has also changed from time to time. In the earlier days, the purpose of water supply is mainly to meet domestic requirements like cooking, drinking and washing. Water was used mainly for irrigation in the neighbourhood. But presently water is used for many purposes and activities, like:

(i) Domestic - drinking, cooking, washing, maintenance of small gardens, etc.

(ii) Industrial needs - processing of raw material (including cleaning them), production needs, and in the preparation of the final product;

...3

(iii) Construction needs (of buildings, houses, roads, offices, shops, factories, etc);

(iv) Needs of commercial establishments, hotels, gardens, transport, railways, services, etc);

Normally, water is used for one activity and the resultant 'waste' water is to be disposed of. Two points deserve mention here. One, that water can be used in a cascaded form for multiple uses. For example, water used for washing of hands, clothes, etc., can be used for gardening. The second point which is based on the first point is that every water need does not require a high quality water. Water requirements for various activities can be categorised into three or more groups depending on the quality of water required. For example, cooking needs a high quality, soft water. Cleaning of process components may not need soft water. Cleaning of floors, vehicles, roads, need a lower quality of water. But unfortunately, the present developments of our urban systems have discarded traditional methods so that there is no easy way of matching quality of water required with the quality of water available..

Water use can also be categorised as :

(a) Primary use - water gets mixed up in the processing activity, and the waste water will be very impure (biologically and/or chemically) and needs extensive treatment before reuse.

(b) Secondary use - like cooling requirements, simple washing needs, etc. Water can be reused with minimum or no treatment.

(c) Tertiary use - like steam generation in boilers in which water is pure and is reused directly.

...4

(d) Consumption - drinking, industrial products, chemicals, food products, beverages. Water is consumed as a part of the product and hence is not available for reuse.

(e) Evaporation to atmosphere - reservoirs, curing in construction work, washing of houses, roads and vehicles, etc.

(f) Percolation to ground from leakage, waste water, etc.

As can be seen from the above, a large part of the water is rejected as 'waste water'. Exponential increases in the population of cities like Bangalore and in the increasing needs for various purposes have resulted in a very high demand on water requirements. Because of these, there is a strong competition on use of water between urban needs and irrigation needs. Development of irrigation from rivers like Cauvery and Arkavathy reduces water available for urban needs, and vice versa. The 300 MLD of water requirement of Bangalore City can irrigate 10950 hectares of paddy cultivation or more than double that area under ragi cultivation. (The total irrigated area under paddy in Bangalore district in 1979 was around 34,000 hectares and about half the area is fed from tanks).

Similarly, cities like Bangalore have steadily stopped harvesting of rain waters. This is indicated by the fact that the number of tanks have come down drastically as shown later. Such a situation has not only reduced the available local water, but has also put a strain on the waste water system during heavy rains (in addition to flooding roads, streets and buildings).

Water sources normally are of several kinds such as: community wells, wells and borewells (tapping ground water), ponds and lakes (harvesting rain water), canals, rivers and

...5

streams. Secondary sources are recycled water. An indirect source is water conservation in processes and activities, minimization of losses and leakages and evaporation losses. In the early days, because of the importance of water to our lifestyle, cities and civilizations developed on the banks of rivers. Later on, cities started using rain waters. Even today, Bombay depends on rain for its water needs. Bangalore City initially used water from the tanks in the City and later on from the Chamarajendra reservoir. Technological advances led to tapping river waters for urban requirements. Instead of relying on them even to meet partially our requirements, we in Bangalore are looking towards our rivers to meet our needs. The water has to be pumped over large heads - over 1500! It can be shown that cost of rain water stored on a land area costed as per BDA rates will be cheaper than cost of Cauvery water. Similarly, cost of recycled water (at around Rs.2 - 3/kilolitres) will be less than the cost of Cauvery water.

Table 1 gives a projection of water demand and supply for Bangalore City as prepared by BWSSB. We can see from this Table that there will always be a shortage of water requirements and this shortage will go on increasing year by year despite the implementation of the third phase of Cauvery. The estimates show that there will be a deficit of 1375 million litres/day by 2001 A.D. Hence, this convincingly shows that we cannot depend on river waters to meet the requirements of Bangalore City. We have to look at alternate strategies like (i) rain water harvesting, (ii) water conservation, and (iii) recycling of waste waters as well as tapping ground waters. (Further development of irrigation on the command areas of Cauvery River and its tributories will reduce the available water to Bangalore considerably - less than the estimates).

TABLE 1

WATER SUPPLY AND DEMAND PROJECTIONS

Year	Gross Demand (MLD)	Gross Supply (MLD)	Shortage (MLD)
1971	162.75	162.75	-
1980	300.00	300.00	-
1982	820.00	435.00	385
1985	1017.65	435.00	582.65
1990	1354.12	705.00	649.12
1995	1691.18	705.00	986.18
2000	2025.30	705.00	1320.30
2001	2080.59	705.00	1375.59

2. Bangalore Water Supply System

Water supply to Bangalore City is handled by Bangalore Water Supply and Sewerage Board (BWSSB). BWSSB is organized into two divisions, and seven sub-divisions. Each sub-division has many service stations. There are about 30 service stations. These handle water distribution in the City. Appendix I lists the units of BWSSB.

Table 2 gives water available per capita over a number of years. Table 3 gives water inflow into Bangalore from the three sources. Table 4 gives projection of water supply from Cauvery. Some salient details of our water supply system are given in Table 5. We can see that energy plays a very significant role in water supply. A look at the expenditure shows that 46% of revenue goes to meet the energy expenditure. Unit cost of water per 1000 litres was 75 paise before Cauvery I Stage implementation. It increased to Rs.1.35 after the first stage and to Rs.2.35 after the completion of the second stage. It is expected to go to Rs.4/- to Rs.6/- after the third stage.

Table 2 : Water Availability per Capita

Year	Gallons/Day/Person
1910	10.6
1921	15.0
1933	18.0
1951	10.7
1958	13.0
1967	20.0
1982	16.0

...8

Table 3 : Water Inflow into Bangalore (MGD)

Year	CRS	SD Halli	Cauvery	Total
1921	--	-	-	1.5
1951	--	-	-	11.0
1980	28.82	1.65	28.61	59.08
1981	28.50	1.03	28.60	58.13
1982	31.17	1.91	32.6	65.68
1983	32.77	2.00	40.36	75.13

Table 4 : Proposed Water Supply from Cauvery

Cauvery Scheme	Yr. of Commissioning	Expected Water Demand in MLD	Total Supply MLD	Shortage
I Stage	Jan. 1974	242.92	228.50	14.42
II Stage	Dec. 1982	810.75	435.00	375.75
III Stage	1987	921.03	705.00	216.03
IV Stage	1991	1041.62	840.00	201.62

Table 5 : Salient Details of Water Supply to Bangalore City

Total number of ground level reservoirs .. 17 + 9*
(* under Cauvery II Stage)

Capacity of Storage in M.G. ... .. 55.7 + 44*

Number of overhead tanks (upto 1980). .. 24 - 28

Capacity in M.G. ... . 4.5 - 5.3

Total length of pipeline ... . 1858.80 Km.

Pumping Capacity (Transmission) ... .. 32016 hp

Energy (Transmission) ... . 192 m. units

Pumping Capacity (Distribution) ... .. 3927 hp.

Energy (Distribution ... . 16 m. units

Revenue receipts (83-84) Rs.1812 lakhs from water supply.

Total revenue receipts (83-84) Rs.2123 lakhs.

Total expenditure (83-84) - Rs.2517 lakhs.

...9

44

Consumption Analysis of Water Supply

Let us look at how the water brought to Bangalore City is used up. The sectors identified by BWSSB are domestic, non-domestic, public fountains, industries, lorry loads and railways. The group - non-domestic - includes house constructions, commercial units, small scale industries and others.

Table 6 gives the water consumption in the seven sub-divisions of Bangalore City in million litres/day for the year 1981. Non-domestic accounts for 35.567 million litres/day and industries 14.117 m.l.d. Table 7 gives water consumption in 1982 and Table 8 for the year 1983.

We can see from Table 8 that domestic sector accounts for 136.15 m.l.d. (54.8%); non-domestic sector 31.76 mld (12.9%) and industries 19.325 mld (7.76%). Both non-domestic and industrial sectors together account for 20.66% of the total water quantity consumed in the City - not a small portion. This shows that a sizeable part of this quanta of water need not be very pure - that is it can be met from a recycled source or stored rain water supply.

Table 6 : Consumption of Water in Each Sub-division (1981)

Sub-Div. No.	Consumption (mld)			Industries	Lorry Loads	Railways
	Domestic	Non-Domestic	Public Foundations			
1	17.813	5.619	10.0	6.84	0.114	2.52
2	10.797	3.07	-	-	-	-
3	11.144	7.087	7.5	-	0.023	-
4	18.034	6.5607	16.435	1.727	0.0514	-
5	na	na	na	na	na	-
6	18.476	10.414	16.65	5.55		-
7	16.77	2.561*	7.041	-	-	-

Table 7 : Consumption in Each Subdivision in 1982

Sub-Div. No.	Consumption (mld) Domestic	Non Domestic	Public Foundations	Industries	Lorry Loads	Railways
1.	18.53	5.99	9.907	7.75	0.1193	3.004
2.	11.56	1.777	-	-	-	-
3.	11.77	7.098	6.761	-	0.0262	-
4.	18.598	8.196	16.188	2.042	0.0429	-
5.	na	na	na	na	na	-
6.	20.99	11.874	16.648	7.904	-	-
7.	16.291	2.972*	7.114	-	-	-

*Non-domestic includes industries also.

Table 9 gives the percentage consumption of water in each sub-division. The following points deserve mention. (i) Sub-division I comprising Yeshwantpur, S.D. Halli, Malleswaram, and Sriramapuram, accounts for 15.6% of its water for industrial purposes. (ii) Sub-division VI, comprising Machalibetta, Johnson Market, Ulsoor, Indiranagar, etc., also consumes about 11.7% of its total water for industrial purposes.

These two sub-divisions can be taken up initially for studying the feasibility of supplying recycled water, particularly for industrial uses. Industrial estates like Peenya, Rajajinagar, Koramangala, etc., occupy large areas, and it is easy to take up rain water harvesting measures in these and other such areas and use the rain water for industrial and washing purposes.

Table 10 : gives the number of connections in each sub-division as recorded in 1983. The total number of non-domestic connections is 11287. A number of these can use rain water and recycled water. A survey can be done to get the continuity of the many industrial users.

46

Table 9 : Percent Consumption of Water in each Sub-division in 1983

Sub-Div. Number.	Domestic	Non-Domestic	Public Fountains	Industries	Others
1	14.66	11.17	22.21	15.61	6.35
2	79.63	20.37	-	-	-
3	44.49	27.83	27.58	-	0.10
4	57.32	7.03	30.45	5.12	0.08
5	66.32	10.07	11.85	11.76	-
6	52.62	13.82	21.86	11.70	-
7	57.44	10.46	32.10	-	-

Table 10 : Number of Connections/Sub-divisions in 1983

Sub-Div. Number.	Domestic	Category Non-domestic	Public Fountains
1	22602	1796	576
2	16550	1021	576
3	14420	2889	553
4	24088	1064	638
5	19712	2025	180
6	26519	1303	797
7	24459	1189	480
Total	143350	11287	3800

4. Case Studies of Water Consumption in Industries

In order to understand the uses of water for various purposes, case studies conducted in chosen places - industries, public fountains etc., are illustrated below :

4.1 Bangalore Dairy

Observations, measurement and calculations were conducted in December 1983. The Dairy was producing about 90 tons of butter/month, 90 tons of Clarified Butter/month, 120 tons of Butter Milk/month, and 220,000 litres of Milk/day, and small quantities of Peda, in addition to Milk Powder (50 tons)/month, and Flavoured Milk.

The Dairy gets its water from BWSSB and stores it in tanks. The average daily consumption is around 750,000 litres. The distribution of this for various types of uses was measured and calculated. Table 11 gives this distribution. Major use is for washing and cleaning the floor. 36.5% of water use is for washing and 23.30% for floor cleaning. It is possible to use recycled water for this purpose. It is shown that 74% of water used is biodegradable. After treatment, this water can be recycled for use in the washing and cleaning activities.

Calculations of water required/kg. of milk show that this figure varies from 2.59, 2.90 for winter months to 5.02 - 5.59 for summer months for the year 1983.

Table 11 - Water Use in Bangalore Dairy Per Day

1.	Washing		
	Tankers	4000	
	Cans	16615	
	Crates	76800	
	Bottles ..	150000	
	Milk Storage Tanks..	14400	
	Cream Storage Tanks.	3500	
	Ghee Bottles ..	5000	
	Cans and Bottles ..	3500	
	Total	273815	(36.5%)
2.	Floor Washing and Cleaning		
	Bottling Section ..	100000	
	Milk Processing Sec.	48000	
	Butter Section ..	20000	
	Ghee Section ..	1600	
	Miltone Section ..	3000	
	Powder Section ..	2000	
		174600	(23.3%)
3.	Process Use ..		
	Water for Milk Powder	73000	
	Butter Churns ..	15940	
	Miltone ..	4400	
	Total ..	93340	(12.4%)

...13

4.	Others ..	118245	(15.8%)
5.	Domestic (Canteen, Offices)	90000	
	Total/day. ..	750000	

4.2 Vita Food Products Pvt. Ltd.

This factory produces 1 tonne of biscuits/day. They get their total water requirements from BWSSB. The water consumption is given below categorywise.

Process Water -	120 litres/day	(12.5%)
Cleaning Machines	30 litres/day	
Cleaning of hands of workers, etc.	160 litres/day	
Washing the Vans	350 litres/day	
Toilets	200 litres/day	
Gardening -	100 litres/day	(10.4%)
T o t a l -	960	

From the above, we can see that a large percentage (more than 80%) of water need not be of a high quality or purity.

4.3 Premier Asbestos Cement Products

This is a small industry making cement asbestos pipes and other cement products. The water source is BWSSB. The factory recirculates water used for curing and cooling purposes, so the water usage is as follows:-

Production use -	625 litres/day	(9.4%)
Curing use (make up) -	5000 litres/day	(75.5%)
Human Consumption	1000 litres/day	(15.1%)

4.4 Small Industries

A bakery in Malleswaram was surveyed. It consumes 240 litres/day - out of which 100 litres is used for the preparation of products and drinking purposes. 140 litres is used for washing purposes. Two studies surveyed did not have

49

any taps and water is brought to them from outside and hence their use of water is restricted to 20 and 40 litres/day mainly for processing only. This is equal to nearly half a litre of water per print (of photograph).

There are six swimming pools in Bangalore, four of them are of international standard. They need 7.86 lakh gallons of water. Water is recirculated and changed once a year. Water consumed for bathing and toilets varies from 1500 litres/day in winter to 9,000 litres/day in summer.

4.5 Study of Water Consumption for Cleaning of Vehicles in Bangalore:

A Service Station was surveyed by us. The following estimates for water consumption was got for different vehicles based on measurements:

Cars	-	300 litres
2-Wheelers	-	150 litres
Lorries	-	1800 litres

Using the above norms, water required to clean all vehicles in Bangalore, East, South and West, was computed as per Table 12. About 612.9 lakh litres of water are used to clean all vehicles once. If we assume that each vehicle is cleaned once a week, the per day water consumption works out to 8.75 million litres.

These studies clearly show that it is possible to conserve water and use impure water for floor-washing. Development of mini-ponds by industries for their use for washing, cleaning and cooling purposes will reduce water consumption considerably. In addition, the surrounding environment will look better, cleaner and cooler. In many industries, space is available to build mini-ponds. In cases of small-scale industries, it is possible to build such ponds in industrial estates.

Table 12

Type of Vehicle		No. of Vehicles	Total Quantity of Water Required to Clean the Vehicles once (lakh litres)
Motor Cycles	..	1,67,416	251.1
Cars	..	37,126	111.4
Jeeps	..	4,193	12.6
Auto Rickshaws	..	12,010	24.1
Taxis	..	1,706	5.1
Lorries	..	11,586	208.6
Total	..		612.9

5. Alternate Water Supplies

As has been repeatedly shown, it is not possible to depend only on river waters to meet Bangalore City's water requirements. It has become essential to look at alternatives. Four alternatives are :

(i) rain water harvesting - There are drains in every street and in the old days, rain water used to be drained into a lake in the neighbourhood with the help of these drains.

Today, many drains are clogged, or have become inadequate resulting in (a) flooding of streets during heavy rains, and (b) overloading sewerage lines. In addition to this, we lose the rain water also.

(ii) Recycling - About 80% of the City's water supply is returned by users as waste waters. These are taken by sewerage lines to sewerage treatment plants. Recycled and treated water from this source is another alternative.

(iii) Ground Water Tapping - This is going on especially during water deficit periods.

(iv) Water Conservation.

Let us look at the first two alternatives in detail.

...16

5.1 Rain Water Harvesting

The rain water potential estimated, based on the minimum rainfall during the past sixty years, works out to 45,000 million litres/year. If we assume that our current daily water need is 400 mld, then the requirement/year will be 146,000 million litres. This shows that rain water can meet about 30.8% of our current water needs. This is based on the minimum rainfall situation. If we consider a normal rainfall case, then the share of rainwater will increase to about 40% of the total needs of today. Hence, this shows that rain water is an important alternative.

In addition, rain water harvesting has many advantages:

(i) Flooding of roads during heavy rains will be avoided;

(ii) Overloading of sewerage pipeline system will be avoided;

(iii) Creation of lakes will improve the environment in addition to creating open spaces.

Indiscriminate formation of layouts on tanks and lakes have reduced the number and area of lakes in Bangalore City. According to one estimate, the number of tanks in Bangalore City was 140 in 1931 and 16 in 1981. This clearly illustrates the drastic reduction in the number of lakes in the City. Further inspection of these lakes shows that many of the existing ones have also shrunk in size. This is due to the fact that some of their inlets have been closed. Due to this factor, the dependence of the City on river water (of BWSSB) has become total (even for cleaning of floors, vehicles and construction purposes).

There is an imperative and urgent need to reverse this trend. Economics show that even if the land for a lake is costed according to market rates, and this cost is included as an annual charge on water supply, cost/kilolitre of water from such a lake will be cheaper than the cost/kilolitre of Cauvery III Stage water. This is in addition to the availability of the rain water. This will also improve the ground water potentia

...17

52

Initially, one can consider large areas like Peenya Industrial Area, ITI with its colonies, HAL with its colonies, BEML, IISc., other industrial estates, BEL, HMT and other areas and introduce artificial lakes as well as rain water drainage systems. Such a system will be able to handle local water needs at least partially. Also cleaning activities of vehicles, buildings etc., can also use these lakes.

5.2 Water Recycling

Since a major portion of the water supplied by BWSSB is returned to its sewerage lines as waste water, this waste water is another important source of supply for water.

The estimated sewerage flows into different valleys like Vrishabhavati Valley, K and C Valley, etc., are given in Table 13. These are estimated figures based on the assumption that the available sewerage is 80% of water supply. Even if we assume that the actual flow is only 50% of this, we can see that after treatment, there is a sizeable quantity of water available for consumption by industries, commercial establishments, gardens, washing and house-construction purposes. Actually, these waters will meet the needs of many users excepting the need for drinking, cooking, food manufacture and process consumption purposes. Rough estimates indicate that more than 70% of our daily requirements belong to this category which can be met by the treated waste water.

K and C Valley gets about 40 million gallons of water per day. There is a partial treatment plant functioning at this place.

Table 13 - Sewerage Flows Into Major Valleys

Name of the Valley	Qty. of flow after I Stage	Qty. of flow after II Stage	Qty. of flow after III St.	Total Flow
1. V-Valley	122 MLD	180 MLD	-	180 MLD
2. K&C Valley	162 MLD	216 MLD	-	216 MLD
3. Hebbal Valley	-	100 MLD	-	100 MLD
4. Others	-	156 MLD	104 MLD	260 MLD
Total	284 MLD	652 MLD	104 MLD	756 MLD

Installation of a total treatment plant will guarantee water supply of nearly 200 MLD. This can meet the entire industrial and commercial requirements of Bangalore today definitely.

Hence, immediate efforts should be underway to treat and reuse this water. Initially, the water can be pumped after treatment, to industries and institutions in the neighbourhood as a separate water piped system (dual to the drinking water supply).

Many industries in Bangalore use treated water. Table 14 lists some of the important industries. Technology for water treatment is available in the country.

Table 15 gives a list of some major industrial consumers of water and their requirements. We can see that these can also locally treat their waste water and use it for their internal needs. About 25 million litres of water is available everyday for treatment and reuse from these 26 industries. Installation of local treatment units by these industries can lead to a reduction in the demand for water by the industrial sector.

Table 14 : List of Industries in Bangalore District who are using treated effluent for irrigation/other uses:

	Name of Industry	Quantity of Waste Water	
		Trade	Domestic
1.	Indian Telephone Industries, Bangalore.	-	10,00,000
2.	Laxman Isola, Bangalore	6,24,000	-
3.	Smith, Kline & French Ltd., Bangalore.	1,44,000	42,000
4.	Jindal Aluminium, Bangalore.	-	13,620
5.	Himalaya Drug Co., Bangalore.	10,000	8,000
6.	Joy Ice Creams, Bangalore.	12,400	2,000
7.	Karnataka Jewels Ltd., Bangalore.	16,000	1,000
8.	Alembic Glass Industries, Bangalore.	1,40,000	1,15,000
9.	Alfred Herbert (India) Ltd., Bangalore.	-	11,000
10.	Usha Martin Black, Bangalore.	135	5,850
11.	Senapathy Whiteley Ltd., Bangalore.	21,15,350	-
12.	Mysore Wine Products Ltd., Bangalore.	12,000	-
13.	Astra-IDL Ltd., Bangalore.	1,45,000	-
14.	Kamani Metals & Alloys, Bangalore.	15,000	15,000
15.	Khoday Brewing and Distilling Industries Ltd., (Brewery Div.), Bangalore.	1,22,000	-
16.	Widia India Ltd., Bangalore.	-	72,000
17.	Suri & Nayar Ltd., Bangalore.	-	56,000
18.	Grindwel Norton, Bangalore.	1,00,000	-
19.	CIPLA, Bangalore	30,000	-
20.	Bharath Fritz Werner, Bangalore	-	23,500
		34,85,885	13,64,970

....20

Table 15 : Major Industries in Bangalore who can treat their Effluents for Reuse:

	names	Quantity Lakh litres/day	
		Trade	Domestic
1.	I.T.I.	5.60	18.10
2.	B.E.L.	23.00	16.00
3.	H.M.T.	34.45	1.35
4.	Amco Batteries	1.12	0.65
5.	BHEL Electroporcelains Div.	4.00	0.50
6.	Widia India Ltd.,	0.48	0.72
7.	Panyam Cements	1.80	0.37
8.	Srinivasa Textiles	4.00	-
9.	Graphite India	1.17	-
10.	M I C O	2.00	4.50
11.	Amco, Hebbal.	0.35	-
12.	N G E F	0.32	4.32
13.	Escorts Ltd.,	9.75	0.90
14.	B E M L	1.04	4.03
15.	Binny Limited	12.36	5.00
16.	H A L	7. 00	70.00
17.	BHEL Control Equipments Div.	1.00	0.60
18.	Karnataka Soaps & Detergents	3.50	-
19.	M E C.	0.40	0.10
20.	Grindwell Norton	1.00	-
21.	International Industries	-	0.49
22.	Bangalore Dairy	7.50	-
23.	Kissan Products	2.67	-
24.	I.T.C.	1.14	-
25.	U.G.	1.71	-
26.	Raja Mills	5.61	-
	T o t a l	123.97	127.63

Total = 25.16 MLD

56

5.3 - Ground Water Tapping

Even now, many industries and organisations depend on ground water as a source to meet their requirements. Surveys conducted show that a large number of industries supplement their water needs by tapping the ground water. Estimates of ground water show that Bangalore District has an additional potential of 93.35 million cubic meters of water available underground. This quantity represents the excess recharge. The current scene of ground water use is chaotic. It is desirable to drill a large diameter long length inclined bore on the ground and tap the water in it so that the cost of ground water extraction on a large scale will become economical.

6. - Suggestions

We can summarise the suggestions for alternatives as:

i) It is desirable to augment rain water drains and lakes so that rain water can become an important source of water.
Specifically, we can start this activity in areas with large number of contiguous industrial units. Some of the areas are industrial estates in Peenya, Koramangala, Rajajinagar, Whitefield, etc., industrial and housing colony areas of BEL, ITI, HMT, HAL etc., institutional areas of IISc., IIM, NAL, Defence, etc. Since each area comes under a single organisational use, it is easier to handle the work of drains and the identification of a place for a storage lake. In all other areas, rain water drains should be cleaned up, augmented and improved and inlets to existing tanks and lakes should be reopened, augmented and cleaned up.

ii) An ideal reservoir exists in Belur. This receives about 40 million gallons/day of partially treated water. So immediate steps should be taken up for treating this water completely and pipe it to the industries, commercial units and offices in the neighbouring areas. Development of a dual water system in the neighbourhood of K & C Valley will also reduce the demand on fresh water supply.

...22

57

iii) Washing platforms in this and other lakes with a pump and sprinklers can be installed so that vehicles - both public-owned and private - can use this facility for washing purposes. KSRTC can think of setting up a lake or tank with treated waste water and rain water as inputs and use this tank for washing activities.

iv) Since recycled water costs less than delivery water, BWSSB should undertake on a major scale recycling plants at different places and develop a dual water supply network. Many cities have dual water systems.

v) Water audit and water economy studies should be undertaken in various organisations and industries. Cooling water (for air-conditioners, water baths, distillation units and other process uses) should be recycled, minimising the the wastage.

vi) Immediate steps should be taken up to build and reopen a number of tanks and lakes on the outskirts of Bangalore City. Since a green belt is identified by the Government, and since Bangalore City has a lot of slopes, it is not difficult to find areas which can be converted into new lakes. A lot of locations can be identified for this purpose. It is also necessary to plan and build water inlets to these tanks.

vii) Specifically, water inlets to some of the tanks in the neighbourhood like Sankey, Ulsoor, Lalbagh, Ulsoor, Doddagubbi, Varthur, Milk Colony, Koramangala, Gokul, Hebbal, etc., should be cleaned up and properly laid so that these tanks can get filled up and the water can be used for a number of activities. It is also possible to delink the rainwater entry into the sewerage lines. The rainwater drains should be maintained and cleaned frequently. They should be considered as an important lifeline for water.

...23

APPENDIX-I

Organisation of BWSSB

The Bangalore Water Supply and Sewerage Board (BWSSB) is formed by an Act of Legislature in 1964. The Board is entrusted with the general duty of providing supply and improving the existing supply of water in the Bangalore Metropolitan Area and of making adequate provision for the sewerage and the disposal of the sewage in the Bangalore Metropolitan Area. The BWSSB comprises mainly of two divisions - North and South, which, in turn, consist of four and three sub-divisions respectively. There are a number of Service Stations in every sub-division, the details of which are given below:-

A. NORTH DIVISION

I. No.1 Sub-division:

1. Malleswaram
2. Srirampuram
3. Yeshwantpur
4. S.M. Halli

II. No.2 Sub-division:

5. High Ground Reservoir I
6. High Ground Reservoir II
7. Kumara Park
8. Gangenahalli

III. No.3 Sub-division:

9. Low Level Reservoir
10. Chicklalbagh
11. Bannappa Park I
12. Bannappa Park II

IV. No.7 Sub-division:

13. Rajajinagar
14. [illegible] Road
15. Vijaya Nagar
16. Magadi Road

Appendix-I (Contd)

B. SOUTH DIVISION

I. No.4 Sub-division:

17. Chamarajpet
18. M.N.K. Park
19. Mount Joy
20. V.V. Puram

II. No.5 Sub-division:

21. Jayanagar
22. Byrasandra
23. Koramangala
24. Banashankari
25. Sarakki

III. No.6 Sub-division:

26. Machohalli
27. Johnson Market
28. Ulsoor
29. Indiranagar
30. J.B. Nagar

Thus, there are 16 and 14 Service Stations in North and South Divisions respectively.

.....

W A T E R

THE GREATER MYSORE CHAMBER OF INDUSTRY
3rd Floor, Rear Block,
Sheriff Chambers
14 Cunningham Rd.
BANGALORE-52

Case Study: Peenya Industrial Area

As an example of self-sufficient water supply generation, let us consider Peenya Industrial Area - one of the largest in India and Asia. Our objective here is to see whether this area can generate water supply in its own area so as to meet its requirements of water leading to a self-sufficient and self-contained system.

The Peenya Industrial Area has the following essential characteristics:

	Stage I	Stage II	Stage III	Area	Total
Number of Units	398	414	95	605	1512
Employment - Total	8757	9156	2100	12705	32718
Investment - (Total) (lacs of rupees)	3760	4303	1025	6032	15120
Production (Sales) (lacs of rupees)	6493	3785	1557	9420	24259
Value added (lacs of rupees)	1948	2037	467	2826	7278
Area (acres)	125	141	60	1400	1726

The total area of Peenya is estimated to be 25 sq. kms. The industrial area is about 7 sq. kms. There are two ways by which the needs of the area can be met: (i) rainwater harvesting, (ii) recycling of waste waters.

If we assume the expected consumption level to be 1 million litres/day, the available waste water will be 0.8 mld. This can be treated, and reused for industrial and cleaning needs of the area. Let us look at both alternatives -

(I) Rainwater Harvesting: If we tap the rainwater in Peenya area, we will be able to get about 20 mld. of water. If a lake is constructed with an average depth of 3 meters, then the area of the lake will be 2.5 sq. kms. It is possible to think of two or three lakes also instead of one. This area will be about 10% of Peenya.

...2

61

Instead, we want to meet the water needs of Peenya only. Then the area of a lake will be 0.125 sq. kms. (12.5 ha) only. This is 0.5% of the area of Peenya and can easily be identified.

Thirdly, we may also consider the case of using re-cycled water for meeting 60% of their requirements and tapping rainwater to meet the remaining 40%. In this case, the area required will be 5 ha. only. This is a very small percentage of the area of Peenya (0.2%).

As it is, rainwater drains are available in various streets. The steps needed to develop a lake are -

(i) Identify a site of about 3 - 5 ha. suitable for a reservoir;

(ii) Augment drains and develop inlets (open or closed type) to the reservoir;

(iii) Construction work - mainly digging work - can be taken up under many development schemes of the government like NREP.

The cost of these constructions will not be much if construction is limited to mainly mud based work only.

(II) <u>Waste Water Treatment and Recycling</u>: The second alternative is to get a major part of the industrial water needs by treatment and reuse of waste water. So it is possible to get about 0.8 mld. from waste water. The cost of a water treatment plant to treat 1 mld. will be around Rs.8 lakhs. The total cost including piping will be around Rs.10 lakhs. This investment will be less than 0.1% of the total investment in Peenya industrial area. (compare the total investment of Peenya, 15120 lakhs with this investment of 10 lakhs). This amount should be obtained as a subsidy from BWSSB or government. Since treatment is a mandatory activity of BWSSB, it is logical that the cost of treatment plant will have to be borne by BWSSB. Also, it will be a good policy to encourage self-sufficient communities to

62

Page 3 was not provided to Public Administration Service.

ways by which the project can be taken up: (i) as a private enterprise; (ii) as a cooperative; and (iii) as a venture of BWSSB, KSSIDC and some industries.

It has been shown that in many countries, charges by private water companies are similar to charges by government-owned companies and services improve considerably due to competition between these two groups. Because private companies are allowed to use waste waters, water demand on rivers will also come down leading to water conservation.

It is desirable that the State Government should encourage a model cooperative to be set up in Peenya to show the feasibility - economic, technical and social - of running self-sufficient communities.

It is not finance that is a major constrain in setting up cooperatives to collect and treat waste waters and supply it in bulk to industries, but the aspect of organisation - technical and day-to-day maintenance and operation aspects. This aspect needs a careful attention. A well-thought-out organisational structure will lead to the success of these cooperatives.

- - - - - - -

Bangalore,
21.6.1986.

ANNEXURE - I

COST ESTIMATES

A detailed estimate is prepared based on S.R. of 1983-84 for all Civil Works and market rates for materials and mechanical equipment. The abstract estimate is given below:

1.	Civil Works	10,00,000.00
2.	Piping & Channels	20,00,000.00
3.	Mechanical equipments	30,00,000.00
4.	Electrical & Instrumentation	25,00,000.00
5.	Providing internal roads	3,00,000.00
6.	Providing lab and model room	2,00,000.00
7.	Providing distribution system	4,80,00,000.00
8.	Pumping units	80,00,000.00
9.	Escalation of prices @ 20%	1,44,00,000.00
10.	Miscellaneous, unforeseen changes establishment charges @ 10%	36,00,000.00
	Total Rs.	9,00,00,000.00

(Rupees Nine Crores only)

G./*

Production Cost per 1000 Ltrs.

1.	Capital cost of the project (based on the estimates)	900 Lakhs
2.	Rate of interest and period of repayment.	9 and 20 years
3.	Period of construction	3 years
4.	Interest on loan during construction period (Capitalised)	175 lakhs
5.	Total capital cost to be financed	1075 lakhs
6.	Repayment of loan per year for 17 years.	63.25 lakhs
7.	Interest on capital (sinking fund is created by investing savings in interest each year, resulting out of repayment)	96.75 lakhs
8.	Depreciation charges:	
	(a) Plant & Machinery @ 6% (55 lakhs + 80 lakhs = 135 lakhs)	8.1 lakhs
	(b) Distribution mains @ 2% (480 lakhs)	9.6 lakhs
	(c) Civil Engineering works and buildings @ 2% (105 lakhs)	2.1 lakhs
9.	Maintenance and repairs:	
	(a) Pumps & Motors @ 2% (135 lakhs)	2.7 lakhs
	(b) Transmission main @ ½% (480 lakhs)	2.4 lakhs
	(c) Civil Engineering works and buildings @ 1% (105lakhs)'	1.05 lakhs
10.	Power charges	25 lakhs.
11.	Chemicals & Consumables	2 lakhs
12.	Additional operating staff	3 lakhs
13.	Total cost	215.95 lakhs
14.	Gross supply	50 MLD
15.	Losses in the system @ 15%	7.5MLD
16.	Net quantity earning revenue	42.5MLD
17.	Net quantity of water sold per year	15512.5 MLD
18.	Unit cost	1.40 per 1000 ltr

Best Available Document

THE GREATER MYSORE CHAMBER OF INDUSTRY
3rd Floor, Rear Block,
Chambers
14, Cunningham Rd.
BANGALORE-560 052

1.00 INTRODUCTION

The City of Bangalore gets its daily supply of water from Cauvery and Arkavathi sources with the commissioning of the Second Stage Cauvery Scheme, the supplies to the City will be around 96 mgd (435 mld) accounting for a per capita supply of around 90 LPCD after allowing for distribution losses and industrial supply. The present industrial supply which is around 64 mld is expected to be doubled by the end of 2000.

With no nearby dependable source and increased dependence on industries for supply of water from B.W.S.S.B., it is essential that the water available is conserved to the maximum extent. In this direction it is essential to harness the underground waters wherever available to the full advantage. In addition to this it will be of a greater help if the industrial demand is met by other means. One such method is to re-use the waste water for industrial purposes after a suitable teritiary treatment.

Out of 435 mld of water supplied to the City about 70 to 80% is expected to flow into valleys as waste water. In K & C Valley zone the ultimate flow is expected to be around 218 mld including industrial waste flow which is around 25 mld at present. There is a great potential for re-use of waste water for gardening, cooling and boiling purposes by the industries in Krishnarajapuram and Whitefield areas on one side and industries located in Hosur road on the other side.

Best Available Document

Under II Stage Scheme the treatment plant at K & C Valley will be upgraded to secondary treatment to meet the present industrial demands, it will be feasible to provide a teritiary treatment plant of 50 mld capacity in K & C Valley treatment plant. Depending on further increased in demands the teritiary treatment plant capacity can be increased at a later date.

2.00 HISTORY OF BANGALORE AREA AND SEWAGE SYSTEM

The sewerage system in the City was first thought of only during 1930 when a beginning was made to lay street sewers. This was gradually extended to other areas and extensions. The raw sewage were led into natural valleys and used for land irrigation without any treatment. The topography of the metropolitan area and the pattern of the sewerage system divides the entire area into four major drainage zones viz.,Vrishabhavathi, Koramangala, Challaghatta and Hebbal valleys.

Before the completion of Cauvery I Stage Scheme, there was no sewage treatment plant and no underground drainage system in many parts of the City. Nearly 75% of the Bangalore City was provided with under ground drainage system during the execution of Cauvery I Stage. Under Cauvery I Stage two primary sewage treatment plants were constructed, one on Mysore Road called V.Valley and other near H.A.L. Air Port called K & C Valley. The sewage thus collected is disposed off to natural water course after primary treatment. The primary units include screening, clariflocculation, digestors, sludge drying beds etc.

3.00 PRESENT TREATMENT FACILITIES

The capacity of V.Valley sewage treatment plant is 122 mld (27 mgd) and the capacity of K & C Valley sewage treatment plant is 162 mld (36 mgd). Under Cauvery II Stage Scheme, the existing two primary sewage treatment plants will be expanded. The V.Valley and K & C Valley sewage treatment plants will be expanded to 182 mld and to 218 mld respectively. Secondary treatment facilities will also be provided at these two sewage treatment plants. Another sewage treatment plant is proposed for Hebbal Valley under Cauvery II Stage of 50 mld capacity with secondary treatment.

4.00 INDUSTRIAL NEEDS

Bangalore is one of the largest industrial centres in the Country. The present industrial supply is around 64 mld (14 mgd). A part from the Central Government undertakings, the State Government has also formulated proposals to have an industrial belt around Peenya, Whitefield and Hosur road. The increase in the industrial demand is assessed to increase at an average rate of 9 mld (2 mgd) per year till 1987 and at the rate of 4.5 mld (1 mgd) per year. By 2001 the industrial demand is estimated to be around 131 mld (29 mgd).

5.00 NEED FOR CONSERVATION OF AVAILABLE WATERS

In the absence of dependable nearby source for augmentation of supplies with the time, any augmentation scheme will be costly and time involved will also be considerable. Also even the timely commissioning of Stage III Scheme will not improve the present per capita supply of 80 to 90 ltrs. and actually the position of

69

per capita supply will go down to 50 - 60 ltr. by 2001. This situation calls for conservation of available waters with all possible means. The underground water potential will have to be used wherever possible the re-use of waste water for industrial and gardening purposes will have to be adopted to conserve the drinking water to the maximum extent so that the prime needs of domestic consumers are met at a satisfactory level.

6.00 CONSERVATION OF WATER BY REUSE OF WASTE WATER FOR INDUSTRIAL AND GARDENING

Today's conventional sewage treatment plants are capable of providing effluents of a quality better than that of many polluted natural bodies of water. Such treated effluents can be safely letout into these bodies but can also be considered as reliable sources of water both in terms of quality and quantity. This proposition becomes quite attractive if (a) the raw water source is far away from the point of consumption thereby necessiating provision of a costly collection and conveyance system and (b) there are industries in the vicinity of the sewage treatment plant which can conveniently use adequate the treated sewage effluents for certain purposes, thus reducing fresh water consumption.

Industrial use of water can be classified as (a) Process (b) Boiler feed (c) Air conditioning (d) Cooling (e) Sanitary (f) Fire protection (g) Lawn, sprinklings, gardening etc. Generally the demand of water for cooling and boiler feed is about half of all other demands put together. Further these two uses do not involve direct

human consumption. Hence, it is possible to consider the use of treated sewage effluents to replace fresh water for these two purposes. A third use to which treated sewage can be put is that for gardening and lawn sprinkling. However, all these uses require that the water should meet certain minimum quality standards. The desirable ranges of concentration of treated sewage effluents in such uses are:

Temperature	Preferably below 24°C
Chlorides	Preferably below 75 mg/l
Hardness	Below 50 mg/l
P H	Between 6,8 & 7.0
Organic content	As low as possible
Corrossion potential	At the lowest possible level.
Suspended solids	Below 25 mg/l

Depending on the end use, the degree of teritiary treatment to be given to secondary treated sewage effluent varies. It may be in the form of simple chlorination or may be as sophisticated as electrodialysis, reverse osmasis, solvent extraction etc. The main aim of this teritiary treatment are (a) removal of suspended and colloidal matter (b) removal of dissolved organic and inorganic solids and (c) minimization of slimy growths in the treated effluent conveyance and distribution systems.

7.00 SCOPE FOR UTILISATION OF TERITIARY EFFLUENT BY INDUSTRIES IN AND AROUND K & C VALLEY TREATMENT PLANT

There is a large belt of Industries around Krishnarajapuram and Whitefield area. Also there is a fast expanding industrial belt in Hosur Road. The industrial needs for cooling and boiler can be met by supplying teritiarily treated water to these areas. For this a separate pumping main has to be laid from K & C Valley treatment plant to pump water to these areas.

Out of a total flow of 210 mld of sewage into the treatment plant about 25 to 40 mld of this will be from Industrial source. As such there is scope for setting up a 50 mld sewage treatment plant for supplying to the various industries located. This also ensures a continuous and un-interrupted supplies without any cuts imposed.

8.00 THE PROPOSAL

The sewage treatment plant at K & C Valley is designed to produce 163 mld of treated sewage. This volume may increase to 218 mld in future. The quality of treated sewage effluent will met IS 4764 - 1973 i.e. suspended solids of 30 mg/l and 5 day 20°C BOD of 20 mg/l. This effluent can be treated further by teritiary methods viz., prechlorination, coagulation settling, filteration and post chlorination and rendered fit for gardening, lawn sprinkling etc. The industries may also use this effluent for cooling, boiler feed etc., after giving it necessary additional treatment.

8.02 It is proposed to have a 50 mld capacity teritiary treatment units. Hence the flow of waste water from secondary treatment units to teritiary treatment units will be uniform throughout the day.

8.03 It is proposed to construct influent pump house, flow distribution box, prechlorination tank, Alum dosage tank, flocculation tank, clarifiers, rapid sand filters, chemical house, Pure water tank and effluent pump house.

8.04 INFLUENT PUMP HOUSE

The teritiary treatment units are proposed at a higher elevation to that of secondary treated effluent channel. Hence, it is necessary to lift the waste water from secondary effluent channel to teritiary treatment units thereby necessitating the construction of influent

pump house. The secondary treated effluent will be taken to wet well through 700 mm dia CI pipe which is laid in a slope of 1 in 300. The pump house is provided with 4 Nos. of pumps of capacity to lift 300 lits/sec. against a head of 11 m. From the influent pump house, waste water will be conveyed to the distribution box through 700 mm dia CI raising main.

8.05 FLOW DISTRIBUTION BOX

The waste water pumped to this unit is made to flow over a rectangular weir into 3 equal sections which acts as prechlorination tank. Waste water before entering the flow distribution box will flow into the mixing channel where arrangement for parshal flume is made. At the point of the flume, chlorine will be injected into waste water for the purpose of prechlorination.

3.06 PRE-CHLORINATION TANK

Chlorination of the waste water is done in this tank before sedimentation. 25 minutes contact period has been provided while designing the tank. The pre-chlorination is required as it (1) affects reduction in taste and odour of waste water (2) reduces bacterial load on filters (3) improves coagulation (4) prevents the growth of algae in sedimentation tank (5) prevents the purification of sludge in settling basin.

8.07 ALUM DOSAGE TANK

From the prechlorination tank, the waste water enters Alum dosage tank where coagulant (alum) will be mixed with the waste water. For thorough mixing, the mixture of waste water and coagulant will be made to

73

pass through the channel in which fluming is done and also vertical baffles will be fixed to both the sides of the channel to create violent agitation.

8.03 FLOCCULATION TANK

From the Alum dosage tank, the Waste Water enters flocculation tank where flow formation takes place. Flocculation is promoted by gentle stirring with slow mixing paddles and the tanks are fitted with mechanical devices to affect control on agitation. A detention period of 30 mins. has been considered for the design.

8.09 CLARIFIERS

The waste water from the flocculation tank enters the clarifier where flocs will settle down at the bottom of the tank. Each clarifier has been designed to have a over flow rate of 40 m^3/m^2/day and a detention period of 120 mins. The settled sludge will be scraped at the bottom of the clarifiers with mechanical scraper which will be mounted on a central shaft connected to gear box and a motor at the top level. The settled sludge will be drained into the wet well of sludge pump house under hydrostatic pressure. Sludge from sludge pump house will be spread on sludge drying beds.

8.10 RAPID SAND FILTERS

There will be some fine flocs and other suspended matter in the effluent of the clarifiers. To remove them and to reduce the bacterial content of the waste water, the waste water is passed through rapid sand filters. For design purpose, the rate of filteration is taken as 100 lts/min/m^2. For cleaning and washing of filters, arrangement for backwashing is made.

8.11 CHEMICAL HOUSE

Adjacent to the filter house, a chemical house will be constructed to store Alum and Chlorine cylinders. Arrangement for housing the chlorinators and also device for making alum solution is made.

8.12 PURE WATER TANK

The effluent from rapid sand filters will be taken into the Pure Water Tank of capacity 1[illegible] mld. In the Pure Water Tank arrangement for post chlorination of teritiary treated waste water is made.

8.14 EFFLUENT PUMP HOUSE

By the side of Pure Water Tank, effluent pump-house will be provided to pump the treated water to the nearby industries. For pumping water, the following lines will be laid to be used exclusively for pumping this water.

1. K & C Valley treatment plant to Whitefield area - distance 17 Kms. and 700 mm line is proposed.
2. K & C Valley treatment plant to Electronic City in Hosur Road - distance 17 Kms. - 700 mm line is proposed.

9.00 COST ESTIMATES

The estimated cost will be Rs.900.00 lakhs as per details given in Annexure - 1. Main breakup costs are:

	Rs. in lakhs
1. Teritiary treatment unit	160.00
2. Pumping main	480.00
3. Pumping units	80.00
4. Escalation, T & P and establishment charges.	180.00
	900.00

The Secondary treatment plant is expected to be commissioned by 1986-87 and the teritiary treatment can be taken up for execution during 1987-88 and completed in 3 years i.e. by 1989-90.

10.00 FINANCIAL FEASIBILITY AND FORECASTS

The flow of funds that will be required for setting up of the tertiary treatment unit of 50 mld capacity are:

1987-88	:	200 lakhs
1988-89	:	500 lakhs
1989-90	:	200 lakhs
		900 lakhs

The cost of production of this water will be Rs.1.40 per 1000 ltrs. as per details given Annexure '3' It is proposed to have 3 years of moretoriam period and the loan of 9 crores is made available in instalments as per requirement of funds. The loan is assumed to carry an interest of 9% to be paid in 20 years.

The water sold is expected to generate around 300 lakhs per year and the plant is expected to be a self sustaining unit and all operation and maintenance cost including that of secondary treatment is expected to be met.

Considering that the filtered water which is sold at a rate of Rs.4.00 per 1000 ltrs. sold to the industrial consumers, it will be very attractive proposal for the industrial users if tertiary treated water is sold at Rs.1.40 per 1000 ltrs. on the average.

11.00 CONCLUSIONS

There is a great need to conserve the available filtered water supplied to the City as the Commissioning of III Stage scheme is also not going to improve the per capita supply of 80 - 90 ltrs. given to the City. Reuse

of water for industrial and gardening purpose will contribute in a big way in the available fresh water for drinking purpose. There is scope for setting up of a 50 mld. teritiary treatment unit at K & C Valley treatment plant and supply it to the industrial consumers in industrial belts located in Krishnarajapuram, Whitefield and Hosur Road areas.

The teritiary treatment as proposed estimated to cost Rs.9.00 crores including the required distribution and pumping. The Project can be taken up for execution in 1987-88 and completed in three years.

The Project can generate funds for repayment of loans fully in 20 years and to function as a self sustaining unit.

***

MKU*

Detailed estimate for providing and laying 700mm, 600mm & 450mm (of lengths 8500m, 5100m & 3400m) diameter distributary mains from KC Valley sewage treatment plant to (i) white field: & (ii) Electronics City, Hosur Road.

******

Sl. No.	Description	No.	L	B	D	Qty.	Rate	Amount
	Part 'A': Mechanical Portion:							
1.	C.I.Pipes 'B' Class (S&S) 700mm Ø of length 5.5m.							
			8500m				1500/-	1,27,50,000/-
2.	C.I.Pipes 'B' Class (S&S) 600mm Ø of 5.5m length							
			5100m				1100/-	56,10,000/-
3.	C.I.Pipe 'B' Class (S&S) 450mm Ø of 5.5m length							
			3400m				790/-	26,86,000/-
4.	C.I.check valves					- L.S. -		5,00,000/-
5.	C.I.collars, branches and bends					- L.S. -		5,00,000/-
6.	Lead and spun yarn					- L.S. -		10,00,000/-
	Part 'B': Civil portion:							
1.	Earthwork excavation item No.1 page 58 0 to 1m depth							
		1	8500	1.2	1	10200	Cmtr.	
		1	5100	1.0	1	5100	"	
		1	3400	0.75	1	2550	"	
						17850	Cmtr.	
	Deduct 10% for hard rock					1785	"	
						16065	Cmtr.	
						@ Rs. 5.35		85,948/-
	1 to 2m depth	1	8500	1.2	1	10200	Cmtr.	
		1	5100	1.0	1	5100	"	
		1	3400	0.75	1	2550	"	
						17850	Cmtr.	
	Deduct 10% for hard rock					1785	"	
						16065	Cmtr.	
						@ Rs. 6.45		1,03,519/-

1	2	3	4	5	6	7	8
2.	Hard Rock Item No.4(a) page 69				3570 Cmtr.	63.75	2,27,5
3.	Conveying and laying of pipes. Item No.6 page 70						
	700mm Ø	8500m				16.95	1,44,07
	600mm Ø	5100m				9.10	46,41
	450mm Ø	3400m				6.00	20,40
4.	Labour charges for fixing valves, specials and bends, etc.				- L.S. -		1,00,00
5.	Miscellaneous and rounding off						2,25,96
						Total Rs.	2,40,00,00

(Rupees Two crores forty lakhs only)

Appendix D

BANGALORE WATER SUPPLY AND SEWERAGE BOARD
PROJECT APPRAISAL ON SECONDARY USE OF WATER PLANT

PROJECT APPRAISAL

REPORT ON SETTING UP OF A 50 MLD TERITIARY TREATMENT PLANT

(AT K&C VALLEY)

JULY 198[illegible]

INVESTIGATION & DESIGNS

DIVISION

BANGALORE WATER SUPPLY

AND

SEWERAGE BOARD

1.00 INTRODUCTION

The City of Bangalore gets its daily supply of water from Cauvery and Arkavathi sources, with the commissioning of the Second Stage Cauvery Scheme the supplies to the City will be around 96 mgd (435 mld) accounting for a per capita supply of around 90 LPCD after allowing for distribution losses and industrial supply. The present industrial supply which is around 64 mld is expected to be doubled by the end of 2000.

With no nearby dependable source and increased dependence of industries for supply of water from B.W.S.S.B., it is essential that the water available is conserved to the maximum extent. In this direction it is essential to harness the underground waters wherever available to the full advantage. In addition to this it will be of a greater help if the industrial demand is met by other means. One such method is to re-use the waste water for industrial purposes after a suitable teritiary treatment.

Out of 435 mld of water supplied to the City about 70 to 80% is expected to flow into valleys as waste water. In K & C Valley zone the ultimate flow is expected to be around 218 mld including industrial waste flow which is around 25 mld at present. There is a great potential for re-use of waste water for gardening, cooling and boiling purposes by the industries in Krishnarajapuram and Whitefield areas on one side and industries located in Hosur road on the other side.

Under II Stage Scheme the treatment plant at K & C Valley will be up-graded to secondary treatment to meet the present industrial demands, it will be feasible to provide a teritiary treatment plant of 50 mld capacity in K & C Valley treatment plant. Depending on further increases in demands the teritiary treatment plant capacity can be increased at a later date.

2.00 HISTORY OF BANGALORE SEWAGE AND SEWERAGE SYSTEM

The sewerage system in the City was first thought of only during 1930 when a beginning was made to lay street sewers. This was gradually extended to other areas and extensions. The raw sewage were led into natural valleys and used for land irrigation without any treatment. The topography of the metropolitan area and the pattern of the sewerage system divides the entire area into four major drainage zones viz., Vrishabhavathi, Koramangala, Challaghatta and Hebbal valleys.

Before the completion of Cauvery I Stage Scheme, there was no sewage treatment plant and no underground drainage system in many parts of the City. Nearly 75% of the Bangalore City was provided with under ground drainage system during the execution of Cauvery I Stage. Under Cauvery I Stage two primary sewage treatment plants were constructed, one on Mysore Road called V.Valley and other near H.A.L. Air Port called K & C Valley. The sewage thus collected is disposed off to natural water course after primary treatment. The primary units include screening, clariflocculation, digestors, sludge drying beds etc.

3.00 PRESENT TREATMENT FACILITIES

The capacity of V.Valley sewage treatment plant is 122 mld (27 mgd) and the capacity of K & C Valley sewage treatment plant is 162 mld (36 mgd). Under Cauvery II Stage Scheme, the existing two primary sewage treatment plants will be expanded. The V.Valley and K & C Valley sewage treatment plants will be expanded to 182 mld and to 218 mld respectively. Secondary treatment facilities will also be provided at these two sewage treatment plants. Another sewage treatment plant is proposed for Hebbal Valley under Cauvery II Stage of 50 mld capacity with secondary treatment.

4.00 INDUSTRIAL NEEDS

Bangalore is one of the largest industrial centres in the Country. The present industrial supply is around 64 mld (14 mgd). A part from the Central Government undertakings, the State Government has also formulated proposals to have an industrial belt around Peenya, Whitefield and Hosur road. The increase in the industrial demand is assessed to increase at an average rate of 9 mld (2 mgd) per year till 1987 and at the rate of 4.5 mld (1 mgd) per year. By 2001 the industrial demand is estimated to be around 131 mld (29 mgd).

5.00 NEED FOR CONSERVATION OF AVAILABLE WATERS

In the absence of dependable nearby source for augmentation of supplies with the time any augmentation scheme will be costly and time involved will also be considerable. Also even the timely commissioning of Stage III Scheme will not improve the present per capita supply of 80 to 90 ltrs. and actually the position of

per capita supply will go down to 50 - 60 ltr. by 2001. This situation calls for conservation of available waters with all possible means. The underground water potential will have to harnessed wherever possible the re-use of waste water for industrial and gardening purposes will have to be adopted to conserve the drinking water to the maximum extent so that the prime needs of domestic consumers are met at a satisfactory level.

6.00 CONSERVATION OF WATER BY REUSE OF WASTE WATER FOR INDUSTRIAL AND GARDENING

Today's conventional sewage treatment plants are capable of providing effluents of a quality better than that of many polluted natural bodies of water. Such treated effluents can be safely letout into these bodies but can also be considered as reliable sources of water both in terms of quality and quantity. This proposition becomes quite attractive if (a) the raw water source is far away from the point of consumption thereby necessating provision of a costly collection and conveyance system and (b) there are industries in the vicinity of the sewage treatment plant which can conveniontly use adequately the treated sewage effluents for certain purposes, thus reducing fresh water consumption.

Industrial use of water can be classified as (a) Process (b) Boiler feed (c) Air conditioning (d) Cooling (e) Sanitary (f) Fire protection (g) Lawn, sprinklings, gardening etc. Generally the demand of water for cooling and boiler feed is about half of all other demands put

human consumption. Hence, it is possible to consider the use of treated sewage effluents to replace fresh water for these two purposes. A third use to which treated sewage can be put is that for gardening and lawn sprinkling. However, all these uses require that the water should meet certain minimum quality standards. The desirable ranges of concentration of treated sewage effluents in such uses are:

Temperature	Preferably below 24 °C
Chlorides	Preferably below '75 mg/l
Hardness	Below 50 mg/l
P H	Between 6,8 & 7.0
Organic content	As low as possible
Corrossion potential	At the lowest possible level
Suspended solids	Below 25 mg/l

Depending on the end use, the degree of teritiary treatment to be given to secondary treated sewage effluent varies. It may be in the form of simple chlorination or may be as sophisticated as electrodialysis, reverse osmasis, solvent extraction etc. The main aim of this teritiary treatment are (a) removal of suspended and colloidal matter (b) removal of dissolved organic and inorganic solids and (c) minimization of slimy growths in the treated effluent conveyance and distribution systems.

7.00 SCOPE FOR UTILISATION OF TERITIARY EFFLUENT BY INDUSTRIES IN AND AROUND K & C VALLEY TREATMENT PLANT

There is a large belt of Industries around Krishnarajapuram and Whitefield area. Also there is a fast expanding industrial belt in Hosur Road. The industrial needs for cooling and boiler can be met by supplying teritiarily treated water to these areas. For this a separate pumping main has to be laid from K & C Valley treatment plant to pump water to these areas.

96

Out of a total flow of 218 mld of sewage into the treatment plant about 25 to 40 mld of this will be from Industrial source. As such there is scope for setting up a 50 mld sewage treatment plant for supplying to the various industries located. This also ensures a continuous and un-interrupted supplies without any cuts imposed.

8.00 THE PROPOSAL

The sewage treatment plant at K & C Valley is designed to produce 163 mld of treated sewage. This volume may increase to 218 mld in future. The quality of treated sewage effluent will met IS 4764 - 1973 i.e. suspended solids of 30 mg/l and 5 day 20° C BOD of 20 mg/l. This effluent can be treated further by teritiary methods viz., prechlorination, coagulation settling, filteration and post chlorination and rendered fit for gardening, lawn sprinkling etc. The industries may also use this effluent for cooling, boiler feed etc., after giving it necessary additional treatment.

8.02 It is proposed to have a 50 mld capacity teritiary treatment units. Hence the flow of waste water from Secondary treatment units to teritiary treatment units will be uniform throughout the day.

8.03 It is proposed to construct influent pump house, flow distribution box, prechlorination tank, Alum dosage tank, flocculation tank, clarifiers, rapid sand filters, chemical house, Pure water tank and effluent pump house.

8.04 INFLUENT PUMP HOUSE

The teritiary treatment units are proposed at a higher elevation to that of secondary treated effluent channel. Hence, it is necessary to lift the waste water from secondary effluent channel to teritiary treatment units thereby necessiating the construction of influent

pump house. The secondary treated effluent will be taken to wet well through 700 mm dia CI pipe which is laid in a slope of 1 in 300. The pump house is provided with 4 Nos. of pumps of capacity to lift 300 lits/sec. against a head of 15 m. From the influent pump house, waste water will be conveyed to the distribution box through 700 mm dia CI raising main.

8.05 FLOW DISTRIBUTION BOX

The waste water pumped to this unit is made to flow over a rectangular weir into 3 equal sections which acts as prechlorination tank. Waste water before entering the flow distribution box will flow into the mixing channel where arrangement for parshal flume is made. At the point of the flume, chlorine will be injected into waste water for the purpose of prechlorination.

3.06 PRE-CHLORINATION TANK

Chlorination of the waste water is done in this tank before sedimentation. 25 minutes contact period has been provided while designing the tank. The pre-chlorination is required as it (1) affects reduction in taste and odour of waste water (2) reduces bacterial load on filters (3) improves coagulation (4) prevents the growth of algae in sedimentation tank (5) prevents the purification of sludge in settling basin.

8.07 ALUM DOSAGE TANK

From the prechlorination tank, the waste water enters Alum dosage tank where coagulant (alum) will be mixed with the waste water. For thorough mixing, the mixture of waste water and coagulant will be made to

pass through the channel in which fluming is done and also vertical baffles will be fixed to both the sides of the channel to create violent agitation.

8.03 FLOCCULATION TANK

From the Alum dosage tank, the Waste Water enters flocculation tank where flow formation takes place. Flocculation is promoted by gentle stirring with slow mixing paddles and the tanks are fitted with mechanical devices to affect control on agitation. A detention period of 30 mins. has been considered for the design.

8.09 CLARIFIERS

The waste water from the flocculation tank enters the clarifier where flocs will settle down at the bottom of the tank. Each clarifier has been designed to have a over flow rate of 40 m^3/m^2/day and a detention period of 120 mins. The settled sludge will be scraped at the botto of the clarifiers with mechanical scraber which will be mounted on a central shaft connected to gear box and a motor at the top level. The settled sludge will be drained into the wet well of sludge pump house under hydrostatic pressure. Sludge from sludge pump house will be spread on sludge drying beds.

8.10 RAPID SAND FILTERS

There will be some fine flocs and other suspended matter in the effluent of the clarifers. To remove them and to reduce the bacterial content of the waste water, the waste water is passed through rapid sand filters. For design purpose, the rate of filteration is taken as 100 lts/min/m^2. For cleaning and washing of filters, arrangement for backwashing is made.

8.11 CHEMICAL HOUSE

Adjacent to the filter house, a chemical house will be constructedto store Alum and Chlorine Cylinders. Arrangement for housing the chlorinators and also device for making alum solution is made.

8.12 PURE WATER TANK

The effluent from rapid sand filters will be taken into the Pure Water Tank of capacity 10 mld. In the Pure Water Tank arrangement for post chlorination of teritiary treated waste water is made.

8.14 EFFLUENT PUMP HOUSE

By the side of Pure Water Tank, effluent pump house will be provided to pump the treated water to the nearby industries. For pumping water, the following lines will be laid to be used exclusively for pumping this water.

1. K & C Valley treatment plant to Whitefield area - distance 17 kms and 700 mm lineis proposed.

2. K & C Valley treatment plant to Electronic City in Hosur Road - distance 17 Kms

9.00 COST ESTIMATES

The estimated cost will be Rs. 1500.00 lakhs as per details given in Annexure-1. Main breakup costs are:

	Rs. in lakhs
1. Teritiary treatment unit	350.00
2. Pumping main	700.00
3. Pumping units	150.00
4. Escalation T & P and establishment charges	300.00
	1500.00

The Secondary treatment plant is expected to be commissioned by 1988-89 and the teritiary treatment can be taken up for execution during 1988-89 and completed in 2 to 2½years i.e. by 1990-91.

90

10.00 FINANCIAL ~~ESTABL~~ FEASIBILITY AND FORECOSTS

The flow of funds that will be required for setting up of the teritiary treatment unit of 50 mld capacity are:

1988-89	400	lakhs
1989-90	700	lakhs
1990-91	400	lakhs
	1500	lakhs

The cost of production of this water will be Rs. 2.50 per 1000 ltrs. as per details given Annexure '3' It is proposedto have 3 years of moretoriam period and the loan of 15 erores is made available in instalments as per requirement of funds. The loan is assumed to carry an interest of 10.75% to be paid in 20 years.

The water sold is expected to generate around 300 lakhs per year and the plant is expected to be a self sustaining unit and all operation and maintenance cost including that of secondary treatment is expected to be met.

Considering that the filtered water which is sold at a rate of Rs. 4.60 per 1000 litrs. sold to the industrial consumers, it will be very attractive proposal for the industrial users if teritiary treated water is sold at Rs. 2.50 per 1000 litrs. on the average.

11.00 CONCLUSIONS

There is a great need conserve the available filtered water supplied to the City as the Commissioning of III Stage scheme is also not going to improve the per capita supply of 80 - 90 ltrs. given to the City. Reuse

...11

91

of water for industrial and gardening purpose will contribute in conserving the available filtered water for drinking purpose. There is a scope for setting up of a 50 mld teritiary treatment unit at K & C Valley treatment plant and supply it to the industrial consumers in industrial belts located in Krishnarajapuram, Whitefield and Hosur Road areas.

The teritiary treatment as proposed estimated to cost Rs. 15.00 Crores including the required distribution and pumping. The Project can be taken up for execution in 1985-86 and completed in three years.

The project can generate funds for repayment of loans fully in 20 years and to function as a self sustaining unit.

ANNEXURE I

Abstract of cost estimates.

~~The~~

A detailed estimate is prepared based on S.R. of 85-86 for all Civil Works and market rates for materials and mechanical equipment. The abstract estimate is given below.

		Rs. in lakhs
1.	Civil Works	200
2.	Piping and Channels	40
3.	Mechanical equipments	50
4.	Electrical & instrumentation	45
5.	Providing internal roads	10
6.	Providing lab andmodel room	5
7.	Providing distribution system	700
8.	Pumping units	150
9.	Escalation of pices @ 20%	240
10.	Miscellaneous unforeseen charges establishment charges @ 5%	60
	Total	1500

ANNEXURE-2

Production cost per 1000 litres

1. Capital cost of the project (based on the estimates)	1500 lakhs
2. Rate of interest andperiod of repayment	10.75 and 20
3. Period of construction	3 years
4. Interest on loan during construction period (capitalised)	225 lakhs
5. Total capital cost to be financed	1725 lakhs
6. Repayment of loan per year for 17 years	101.47 lakhs
7. Interest on capital (sinking fund is created by investing savings in interest each year, resulting out of repayment)	186.78 lakhs
8. Depreciation charges:	
(a) Plant & Machinery @ 6% 195 (95 lakhs + 100 lakhs = 195 lakhs)	11.70 lakhs
(b) Distribution mains @ 2% (700 lakhs)	14.0 lakhs
(c) Civil Engineering works and buildings @ 2% (255 lakhs)	5.10 lakhs
9. Maintenance and repairs:	
(a) Pumps & motors @ 2% (195 lakhs)	3.9 lakhs
(b) Transmission main @ ½%(700 lakhs)	3.5 lakhs
(c) Civil Engineering works and Building @ 1% (195 lakhs)	1.95 lakhs
10. Power charges	40 lakhs
11. Chemicals and consumables	4 lakhs
12. Additional operating staff	5 lakhs
13. Total cost	377.4 lakhs
14. Cross supply	50 M.L.D.
15. Lossesin the system @ 15%	7.5 MLD
16. Net quantity earning revenue	42.5 M.L.D.
17. Net quantity of water sold per year	15512.5 M.L.
18. Unit cost	2.43 per1000

say 2.50 per 1000 litrs.

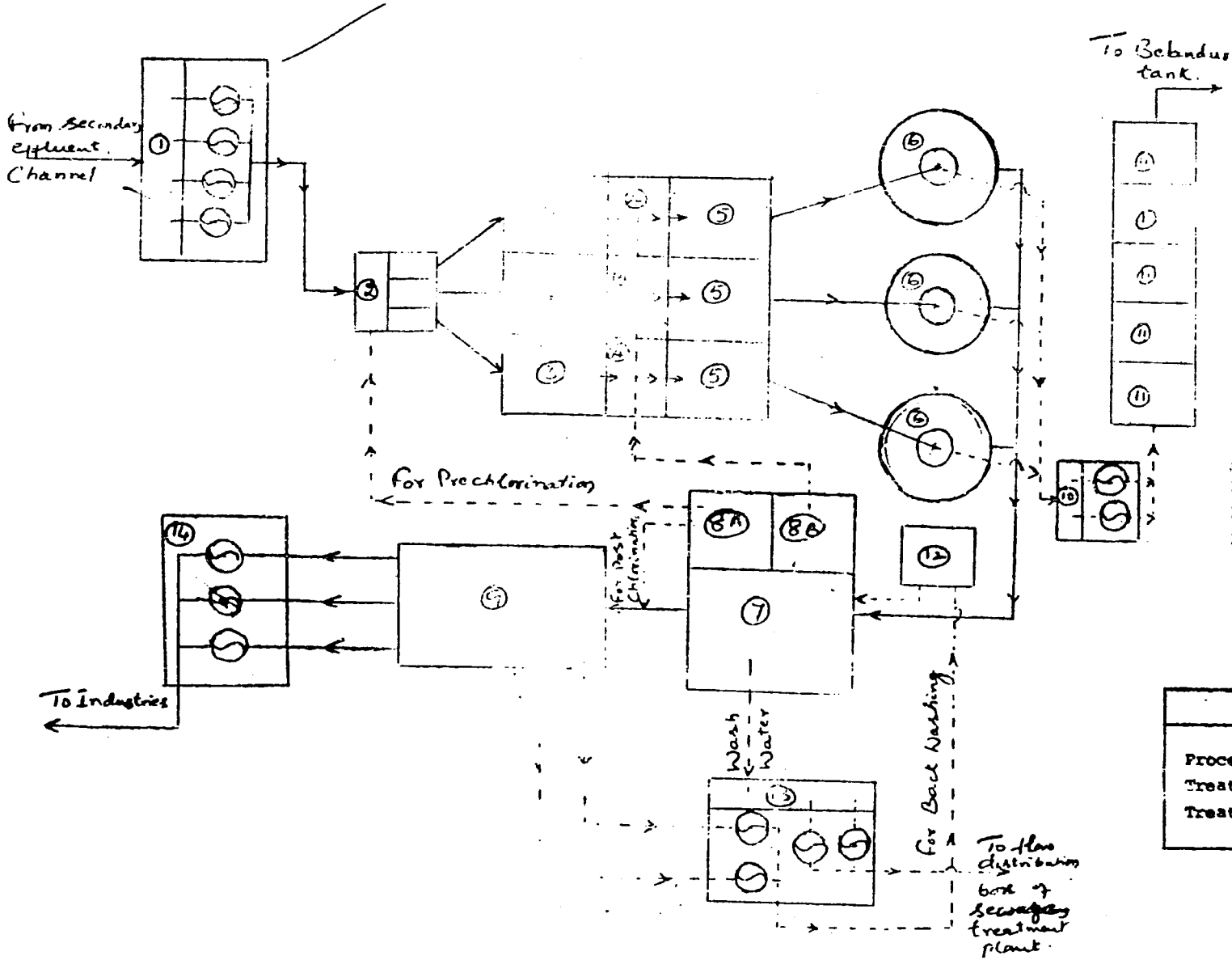

INDEX

Pumps

1) Influent Pumphouse
2) Flow distribution box
3) Prechlorination Tank
4) Alum dosage tank
5) Flocculation tank
6) Clarifier
7) Rapid sand filter
8A) Chlorine storage house
8B) Alum storage house
9) Pure water tank
10) Sludge pumphouse
11) Sludge drying beds
12) Over head tank
13) Wash water pumphouse
14) Effluent pumphouse.

B. W. S. S. B.

Process Diagram of Tertiary Treatment at K&C Valley Treatment Plant.