PN-ABA-476
ISN 57332
3.8.1-19-1
Vol VII
1 COPY

ORGANIZATION for ENERGY PLANNING

جهاز تخطيط الطاقة

AUDIT

FINAL REPORT

VOLUME 1 OF 2
VOLUME 2 OF 2
BY

JOINT ENGINEERING GROUP

* ORGANIZATION FOR ENERGY PLANNING (OEP)
* CAIRO DYEING AND FINISHING COMPANY
* FOSTER WHEELER ENERGY CORPORATION (FWEC-USA)

April 4, 1985

O.E.P. تلكس دولى ٢٣٤٠٤ تليفون : ٩٢٦٣٤٢ أو ٩٢٧١٨٩
1, Aisha El-Taymorya — Garden City, Cairo Phone 926342 o

AUDIT REPORT

TABLE OF CONTENTS

		Page
1.0	INTRODUCTION	1
2.0	SUMMARY AND CONCLUSIONS	2
2.1	SUMMARY	2
2.2	CONCLUSIONS	10
3.0	DISCUSSION	11
3.1	OBJECTIVES OF THE AUDIT	11
3.2	METHOD OF APPROACH	13
3.3	GOALS AND SPECIAL CONSIDERATIONS	15
3.4	ANALYSIS OF ENERGY CONSUMPTION	16
3.5	ECONOMIC EVALUATION	45
3.5.1	VALUE OF ENERGY SAVED	46
3.5.2	ESTIMATING INVESTMENT COST	47
3.6	ENERGY CONSERVATION OPPORTUNITIES (ECO'S)	50
3.6.1	SUMMARY LIST	50
3.6.2	DETAILED ECO PRESENTATION (The Following Sections for Each ECO)	57
	1.0 PURPOSE	
	2.0 PROCESS DESCRIPTION	
	3.0 EQUIPMENT LIST/SIZE	
	4.0 PREDICTED ENERGY SAVINGS	
	5.0 INVESTMENT AND ASSOCIATED ECONOMIC EVALUATION	
	6.0 CONCLUSIONS	
	7.0 RECOMMENDATION	

APPENDIX

		Page
"A"	BASIC ENGINEERING DATA	206
"B"	NEW DATA COLLECTED	213
"C"	SCHEMATIC FLOW DIAGRAMS	254
"D"	EQUIPMENT LIST	261
"E"	SUPPLEMENTARY ECO DATA	270
.	LAST PAGE	356

1.0 Introduction

The Organization for Energy Planning, in conjunction with the plant staff of the Cairo Dyeing and Finishing Company, and with the technical assistance of Foster Wheeler Energy Corporation, has executed an energy audit of the Cairo Dyeing and Finishing Company plant in Cairo, Egypt. The audit activity completes the final phase of a three step program (screening, preaudit and audit) undertaken to determine and evaluate the energy conservation opportunities which could be developed at the Cairo Dyeing and Finishing Company.

This report documents the steps taken to identify the energy conservation opportunities and describes salient technical details, investment cost, and economic evaluation.

Section 2.0 of this report provides a summary of the results of the audit, Section 3.0 includes an indepth discussion of all features of the work, and the appendices present various significant items of backup data.

2.0 Summary and Conclusions

2.1 Summary

The Cairo Dyeing and Finishing Plant in Cairo, Egypt produces nominally 60 million meters/year of dyed and finished fabric in two plants, the Shobra plant and the Fiber plant.

The plant overall, is energy intensive, consuming 8,162 metric tons/year of mazout, and 11,151,000 kwh/year of electricity, for a total energy bill of 3.1 million LE, based upon worldwide prices, as explained in Appendix "A".

The Organization for Energy Planning (OEP) in conjunction with the Cairo Dyeing and Finishing Company and Foster Wheeler Energy Corporation (FWEC) have conducted an audit of the Cairo Dyeing and Finishing Company to develop, formulate, and rank energy conservation opportunities (ECO's). These energy conservation opportunities are presented in two categories, entitled:

- o No cost/low cost ECO's, and
- o Investment ECO's

The overall program to evaluate the energy conservation opportunities in the Cairo Dyeing and Finishing Company was performed in three steps, namely:

- o Screening
- o Preaudit, and
- o Audit

The initial phase, screening, resulted in the selection of the Cairo Dyeing and Finishing Company as a reasonable candidate for an energy audit.

Upon completion of the screening activity, the preaudit phase was undertaken, the energy consumption of the plant was evaluated, and a list of ECO's was prepared.

This report documents the results of the audit activity, which include:

- o A discussion of the approach
- o A detailed description of each ECO
- o Supporting documentation, as required

The preaudit report predicted a goal which envisioned the savings of 10 percent of plant energy in the first year, following partial implementation of no cost/low cost ECO's. Audit results reveal a potential saving of over 500,000 LE/year with simply the implementation of only the two largest annual savings no cost/low cost ECO's, thus making this goal quite realistic.

Additionally, a total of five (5) investments ECO's will provide simple payout in one (1) year or less and implementation of all of the most attractive no cost/low cost ECO's will produce a predicted savings of 899,500 LE/year thus pointing up the practical achievement of the 30 percent savings set for a five (5) year period.

The total list of ECO's, in summary form, with predicted annual savings, estimated investment and payout in years is presented in Table 1.1 which follows.

Those items which have an investment cost of LE 25,000 or less are listed in Table 1.1 as No Cost/Low Cost.

TABLE 1.1 (PRIORITY 1)

PLANT: CAIRO DYEING AND FINISHING COMPANY

ECO PAYOUT SUMMARY

PAYOUT OF ONE YEAR OR LESS

NO COST/LOW COST

ECO#	TITLE	Worldwide Cost, LE Annual Energy Savings	Investment Cost, LE	Payout, years
A-19	Form a Committee to Plan and Implement ECO's	Extensive	0	Immediate
A-20	Publicity to Make Employees Aware of Importance of Energy Conservation	Extensive	0	Immediate
A-1	Eliminate venting of Steam Between Shifts	200,000 (Note 1)	0	Immediate
A-18	Reduce Peak Demand of Electricity for Fiber Plant	53,500	0	Immediate
A-7	Shutdown water & steam Usage during Power Failures	4,000	0	Immediate
A-6	Study the Effect of Insulation on Heat Loss From Pipes	0	0	Immediate
A-14	Possible Operation of Boilers at a Much Lower Pressure	17,400	8,800	0.51
B-8	Eliminate Two Current Users or High Pressure Steam			
A-2	Repair of Steam, etc. Leaks in Piping	368,000	13,600	0.04
A-8	Improving Combustion Efficiency	40,600	4,200	0.10
A-3	Test, Repair, Replace Steam Traps	120,000	22,900	0.19
A-4	Trap Testing Program	60,000	17,000	0.28
A-17	Investigate Putting Covers on J Boxes and Other Equipment	36,000	22,800	0.63
	Subtotal	899,500 (Note 1)	89,300	0.10

NOTES: (1) This savings will be reduced by approximately 103,700 LE/year when ECO's A-10, 12, 13, A-2, A-3, A-4, A-17 and A-5 are implemented.

TABLE 1.1 (PRIORITY) (Cont'd)

PAYOUT OF ONE YEAR OR LESS

INVESTMENT

ECO #	TITLE	Worldwide Cost, LE Annual Energy Savings	Investment Cost, LE	Payout, years
B-11	Water Recovery System	307,300	50,200	0.16
B-9b	Power from Two Sources	120,000	72,500	0.60
B-6	Consider Use of Heat Pipes to Recover Heat from Hot Air Leaving Dryer Stacks	48,000	31,300	0.65
B-2	Condensate Collection System	99,100	84,700	0.85
B-4	Installation of Capacitors to Improve Power Factor	133,400	119,500	0.90
	Subtotal	707,800	358,200	0.51
	TOTAL	1,607,300	447,500	0.28

TABLE 1.1 (PRIORITY 2)

Plant: Cairo Dyeing and Finishing Company

ECO PAYOUT SUMMARY

PAYOUT OF ONE TO THREE YEARS

NO COST/LOW COST

ECO #	TITLE	Worldwide Cost, LE Annual Energy Savings	Investment Cost, LE	Payout, years
A-15	Reduce Steam Required for Deaerator	4,700	11,100	2.36
	Subtotal	4,700	11,100	2.36

INVESTMENT

ECO #	TITLE	Worldwide Cost, LE Annual Energy Savings	Investment Cost, LE	Payout, years
A-5	Add New or Repair Existing Insulation	49,000	59,600	1.22
B-5	Demand Controller for Reducing Electric Power Demand	38,500	73,800	1.92
B-1	Modify Thermasol Machine to Eliminate Electric Heating	40,600	100,000	2.46
B-3	Recovery of Heat from the Stacks of the Existing Four Oil Boilers	23,500	60,000	2.55
B-10a (note 1)	Power Recovery Turbine	389,000	1,100,000	2.83
A-10, 12, 13	Improve/add/fix Instrumentation	78,200	228,600	2.92
	Subtotal	618,800	1,622,000	2.62
	TOTAL	623,500	1,633,100	2.62

NOTES: (1) After implementation of ECO's A-2, A-3, A-4 and A-5 both ECO-B-10a and B-10b should be reviewed to determine whether or not it might not be better to implement ECO-B-10b instead of B-10a.

TABLE 1.1 (PRIORITY 3)

PLANT: CAIRO DYEING AND FINISHING COMPANY

ECO PAYOUT SUMMARY

PAYOUT FROM THREE TO FIVE YEARS

NO COST/LOW COST

ECO#	TITLE	Worldwide Cost, LE Annual Energy Savings	Investment Cost, LE	Payout, Years
A-11	Consider the Use of "Bump and Run" on Dye Using Equipment	5,500	19,500	3.54
	Subtotal	5,500	19,500	3.54

INVESTMENT

ECO#	TITLE	Worldwide Cost, LE Annual Energy Savings	Investment Cost, LE	Payout Years
A-22	Reduce Heat Losses in Mazout Storage System	30,600	118,100	3.86
B-10b (Note 1)	Install a Cogeneration System to Produce Total Electricity and Steam Required (Note 1)	518,000	2,538,000	4.90
	Subtotal	548,600	2,656,100	4.84
	Total	554,100	2,675,600	4.83

NOTE: (1) After implementation of ECO's A-2, A-3, A-4 and A-5 both ECO-B-10a and B-10b should be reviewed to determine whether or not it might not be better to implement ECO-B-10b instead of B-10a.

TABLE 1.1 (PRIORITY 4)

PLANT: CAIRO DYEING AND FINISHING COMPANY

ECO PAYOUT SUMMARY

PAYOUT GREATER THAN FIVE YEARS

INVESTMENT

ECO#	TITLE	Worldwide Cost, LE Annual Energy Savings	Investment Cost, LE	Payout Years
B-9a	Install Emergency Diesel Generator to Minimize Problem of Repeated Power Failures	150,000	1,300,000	8.67

TABLE 1.1 (NO PRIORITY)

PLANT: CAIRO DYEING AND FINISHING COMPANY

ECO PAYOUT SUMMARY

ECO'S NOT TO BE IMPLEMENTED

NO COST/LOW COST

ECO#	TITLE	Worldwide Cost, LE Annual Energy Savings	Investment Cost, LE	Payout Years
A-9	Check the Feasibility of Reusing Dye for More Than One Batch	Not Yet Known (Note 1)		
A-16	Use Low Pressure Instead of High Pressure Steam for Deaerator	Not Applicable		
A-21	Use of Less Expensive Heat Transfer Medium for Various Oil Boilers	Not Applicable		

INVESTMENT

B-12	Heat Recovery from Hot Wash Water to Cold Wash Water	Not Applicable		

NOTES: (1) For ECO #CD-A-9 pilot plant tests are required prior to a detailed analysis.

2.2 Conclusions

The audit activity, and the results obtained, permits the following conclusions:

a) Significant savings can be experienced by implementation of no cost/low cost ECO's, based on current worldwide pricing.

b) A large number of investment ECO's can readily achieve a rapid payout, based on worldwide pricing.

c) Plant performance and production improvements should be expected, due to operating efficiency improvements obtained during implementation of the ECO's.

d) Some of the ECO's were found to be unattractive from a technical or economic standpoint and are not to be implemented.

3.0 DISCUSSION

3.1 Objectives of the Audit

The dual objectives of the energy audit are:

- o identify and measure where energy is used, and
- o identify, evaluate and list in order of priority each no cost/low cost and each capital investment energy conservation opportunity (ECO).

3.1.1 To Identify Where Energy Is Used

The achievement of this objective requires the evaluation, in some detail, of all features of energy consumption in the plant.

Subactivities to the objective include;

- o the creation of a "base case", as a reference for savings, corresponding to current operation.
- o the careful scrutiny of records, and their supplementation by field measurements, as necessary to establish the utility consumption.
- o particular attention to the energy consumption of large users, with the reasonable assumption that major utility consumption devices offer much greater opportunities for savings.
- o a review of all sources of lost energy, such as leaks in steam, air, or water systems, and missing or insufficient insulation.
- o a review of all losses which can be recovered, and an appraisal of those which can not be recovered.

3.1.2 Identify Energy Conservation Opportunities

This objective is based upon the proper and effective completion of the identification of all locations in which energy is currently used. After this definition is complete, the task of completing the identity and the economic justification, or lack thereof, of each ECO can be completed.

Again, the achievement of the objective includes several sub tasks, which include:

- evaluation of ECO's which relate to no cost low cost implementation.
- evaluation of ECO's which require an investment for implementation.
- development of all significant data to prioritize the ECO's, highlight attractive investments, and provide a basis for rejection of unsatisfactory ECO's.

3.2 Method of Approach

During the preaudit a detailed schedule for carrying out the audit was developed. The time frame for the audit was set at seven weeks, including reports and presentation.

OEP, plant personnel as required, and FWEC specialists were all deployed in a coordinated effort to accomplish this task.

The first day started with a planning meeting between OEP and FWEC personnel. A detailed measurement plan was set up, followed by a visit to the plant to acquaint the plant personnel with the plan, discuss the need for penetrations, agree upon the exact location of penetrations, and incorporate any comments which plant personnel might have.

During the first two weeks, after the necessary preparations were made by plant personnel, instrument measurements, visual observations and all necessary information required for the audit report was gathered. In addition to the team present previously for the preaudit, the audit staff was augmented by FWEC specialist personnel, which included an additional process engineer, and combustion and electrical experts. These personnel worked with other audit team members previously utilized in the preaudit and assisted in instrument measurements, as well as in the gathering and analysis of other relevant data.

After the first week of the audit was completed, a cost estimating specialist joined the team, and started the estimating work required for each of the ECO's.

Almost all of the necessary plant data was collected in the first two weeks, with the next two weeks used for verification of plant data where required.

During this period sketches were started for the various systems, as well as listings of equipment and other technical data, as necessary for complete definition of each of the ECO's.

At the end of the second week, estimated sizing of equipment was well under way.

The major part of the work after the first two weeks of the audit was carried out in OEP's offices in Cairo, with plant coordination as necessary to produce a complete, coherent, and useable report.

Equipment sizing, system design, energy savings, and estimated investment for the various ECO's were continued through the fourth week. Economic evaluation and priority listing of ECO's extended into the fifth week.

During the latter part of the fourth week report preparation began and continued through the fifth week.

Weeks six and seven were reserved for presentations to OEP and then to the plant, culminating with the finished report at the end of the seventh week.

3.3 Goals and Special Considerations

In order to have an effective energy conservation program it is necessary to establish a goal, as a target for which everyone in the plant strives. This goal should be realistic and also somewhat conservative, rather than overly optimistic, in order to insure that it can be achieved. A goal which we would recommend is a reduction in yearly energy consumption of 10 percent at the end of the first year, following partial implementation of low cost/no cost items and 30 percent at the end of a five year program of implementation of investment related items.

The results achieved each year are plotted and compared against the base case (energy consumption before any implementation was started) in order to demonstrate the actual reduction in consumption versus the predicted goal. Any deviation in energy consumption must be accounted for in terms of increased production, new products, new units, etc.

One special consideration which much be accounted for in carrying out the audit is the fact that the Cairo Dyeing and Finishing Plant is closed for two or three weeks every July for maintenance. Scheduling of the audit and subsequent work must be coordinated in such a way that energy conservation recommendations can preferably be implemented during this period in July.

3.4 Analysis of Energy Consumption

The preaudit established the need for a formal audit, and the advantages which could be obtained from that audit.

The preaudit provided a review of the energy consumption of the plant, including an examination of the various types of energy consumed, and their cost impact on production. This energy consumption analysis, as further described below, provides the baseline for the audit, and the implementation of its recommendations.

The basic analysis of these variables is accomplished through the use of a specialized computer program developed by FWEC, and employed by OEP personnel in their preaudit and audit work.

This program requires, as input, the quantities and unit cost of all energy supplied to the plant. This includes fuel oils, electricity, natural gas, and other fuels, as applicable. These data, which includes production quantities, are entered on a monthly basis, for one recent calendar year. Through systematic calculations the program produces a variety of results. These include monthly cost of the energy sources themselves in units of currency or energy consumption, as well as the relationship of energy cost and consumption to production units.

In specific terms, the following inputs related to the plant are provided to the program:

- Mazout consumed, by month (metric tons)
- Sular consumed, by month (metric tons)
- electricity consumed, by month (KWH)
- cost of Mazout, by unit (LE/metric ton)
- cost of Sular, by unit (LE/metric ton)
- cost of electricity, by unit (LE/KWH)
- production units, by month (thousands of meters)

The program then calculates a series of tables which permit an effective review of quantity, cost and percentages of each, and all, energy source(s).

Specific calculations produced, for <u>each</u> energy source, for each month are:

o total cost of this energy source,	LE/month
o total cost of this energy source,	LE/yr
o energy unit cost of this energy source,	LE/MMBtu
o energy unit average cost of this energy source	LE/MMBtu
o production unit cost of this energy source	LE/unit
o energy cost per production unit of this energy source	MMBtu/unit/month
o production cost of this energy source	MMBtu/month
o percentage cost of this energy source	% of total Btu/month

Additionally, the program calculates the following totals, again based on the primary input data.

- o totals of all of the above, annually
- o energy and grand totals per month
- o averages of all of the above

Please note that each of the above tables is produced with both domestic energy prices and with worldwide prices to permit a true evaluation of cost and cost savings. (pricing basis as per Basic Engineering Data, see Appendix "A" of this report.) The worldwide price is of particular value in this analysis, as it reflects the value of the energy, if used as an export product.

The existence of this calculation technique permits direct plots to be made on the computer, to exhibit a graphic display of the table's data, and to aid with analysis.

The choice of curves to be presented is generally made after a careful review of the tables, to detect trends which would be meaningful as curves when plotted.

Such trends may include those which indicate costs not directly dependent upon production, such as heating or air conditioning, costs which vary with season, such as fuel (in other parts of the world), discontinuities in production or energy consumption, and the like.

Generally, the plots of greatest interest will be production units, unit cost, and energy consumption per production unit, plotted against calendar time.

Table A through D reflect the energy consumption for the Shobra plant and for the Fiber plant. For each plant both the domestic and the worldwide price structure is given, as discussed above. Note that, in the worldwide pricing case, the total energy cost for both plants is 3,100,000 LE/year.

In all, eleven graphs have been plotted by the computer for which six are for the Shobra and five for the Fiber plant.

Since there are no specific records as to how much of the total mazout consumption is used in each of the two plants, the management of the Cairo Dyeing and Finishing Company recommended that the total mazout consumption be divided in the ratio of 65 percent for the Shobra factory and 35 percent for the Fiber factory. For the current operation it is not possible to valididate these percentages, however, in the future, when more instrumentation is installed, it will be possible to measure the amount of mazout consumed in each plant, and to verify the distribution.

By plant, the following conclusions are drawn from the energy consumption tables and graphs.

3.4.1 Shobra Plant - Conclusions from Tables

1. While the Shobra plant is designed to produce 60% of the product and the Fiber plant the remainder, the yearly production figures obtained for the past fiscal year indicates that the Shobra plant produced 70% of the product and the Fiber plant 30% of the product. Refer to the total in column 22 on Tables B and D.

2. In the Shobra factory 90 percent of the energy is based on oil usage. Refer to column 31 in Table B.

3. Even though 90 percent of the energy consumed is for oil usage, based on domestic costs, nearly twice as much money is spend annually on electricity than is spent on oil. Refer to columns 5 and 9 in table A.

4. During the seventh through ninth months (January through March) as shown on the total cost and production plots the energy cost is increasing while the production is decreasing. This condition is best illustrated by the graphic presentations which follow, with specific reference to paragraph 3.4.2, plots #1 and #2.

3.4.2 Shobra Plant - Graphic Presentation

As earlier mentioned, six graphs are prepared to reflect significant trends in the tabular data in the Shobra plant. (All graphs in this section are taken directly from the tabular data).

Plot #1 and Plot #3:

Plot #3 reflects the total cost (domestic price) of energy for the Shobra Plant, plotted against time. Two strong dips in cost per unit are observed, occuring at

month 3 and month 6. These two dips roughly follow the plot of production units vs time, as shown by plot #1. Beyond month 7, however, production decreases, while total energy cost increases until month 10, at which point both turn down.

Plot #2 and #5

Plot #2 reflects total energy consumption per unit of production, broken down by energy type. It is apparent from this curve that, while the major cost element of production is electric power, the major energy input comes from mazout.

Plot #4 and #6

Plot #4 and #6 reflect the same data as plot #5 and #3, except that they are based on worldwide pricing. Trends and curve shape are identical to curves 3 and 5, except that relative position changes, since the world price for electricity is a lower multiplier than the worldwide price of oil.

3.4.3 Fiber Plant-Conclusions from Tables.

1. One can see a very wide variation in the monthly consumption of electricity. This is probably due to whether or not the Thermasol machine is used and also due to how frequently there are power failures. (Power failures result in a high energy loss due to shutdown of many units, steam production, etc.) Refer to Table C, column 4 and plots 7 through 9.

2. The month of June has a very low production rate which most likely is due to a plant shutdown for maintenance. The electrical consumption for this month, due to reasons which are not clear, is quite similar to other adjacent months. This results in a ratio of electrical

consumption to unit of production in the month of June which is totally out of line with the other months. This produces an unusually high electrical cost per unit in June. Refer to Table D, columns 22 and 24.

3. Mazout usage represents approximately 77 percent of the total energy usage while electricity represents 10 percent and sular 13 percent. Refer to Table D columns 27, 31 and 39.

4. Even though 77 percent of the energy consumed is for mazout usage, based on domestic cost twice as much money is spent annually on electricity than is spent on oil. Refer to columns 5 and 9 in Table C.

3.4.4 Fiber Plant Graphic Presentation.

Plots #7 to #11:

Plots 7 to 11 parallel the logic discussed previously for plots 1 to 6.

PLANT SHUBRA . TABLE A
DATA, YEARS 83/84

ENERGY CONSUMPTION SUMMARY DOMESTIC PRICING

DATE JAN.10,1985
REV MAR.17,1985

MONTH	HEATING DEGREE DAYS	COOLING DEGREE DAYS	ELECTRICITY QUANTITY KWH	ELECTRICITY COST L.E. TOTAL L.E.	ELECTRICITY COST L.E. LE/KWH	ELECTRICITY COST L.E. LE/MMBTU	OIL & (SEE NOTE) QUANTITY TONS,METRIC	OIL COST L.E. TOTAL LE	OIL COST L.E. LE/TON	OIL COST L.E. LE/MMBTU	NATURAL GAS QUANTITY MCM	NATURAL GAS COST L.E. TOTAL LE	NATURAL GAS COST L.E. LE/MCM	NATURAL GAS COST L.E. LE/MMBTU	OTHER NONE QUANTITY TONS,METRIC	OTHER NONE COST L.E. TOTAL LE	OTHER NONE COST L.E. LE/TON	OTHER NONE COST L.E. LE/MMBTU	TOTAL ENERGY COST
1	2	3	4	5	6	7	8	9	10	11	12	13	14	15	16	17	18	19	20
JUL	0.00	0.00	469300	4693.00	0.0100	2.931	339	2540.93	7.500	0.194	0.00	0.00	.00	.0000	0.00	0.00	0.00	0.000	7234
AUG	0.00	0.00	456500	4565.00	0.0100	2.931	496	3720.00	7.500	0.194	0.00	0.00	.00	.0000	0.00	0.00	0.00	0.000	8285
SEP	0.00	0.00	473000	4730.00	0.0100	2.931	401	3007.50	7.500	0.194	0.00	0.00	.00	.0000	0.00	0.00	0.00	0.000	7733
OCT	0.00	0.00	460600	4606.00	0.0100	2.931	570	4275.00	7.500	0.194	0.00	0.00	.00	.0000	0.00	0.00	0.00	0.000	8881
NOV	0.00	0.00	629600	6296.00	0.0100	2.931	399	2992.50	7.500	0.194	0.00	0.00	.00	.0000	0.00	0.00	0.00	0.000	9289
DEC	0.00	0.00	435900	4359.00	0.0100	2.931	458	3435.00	7.500	0.194	0.00	0.00	.00	.0000	0.00	0.00	0.00	0.000	7794
JAN	0.00	0.00	497400	4974.00	0.0100	2.931	505	3787.50	7.500	0.194	0.00	0.00	.00	.0000	0.00	0.00	0.00	0.000	8762
FEB	0.00	0.00	612200	6122.00	0.0100	2.931	491	3682.50	7.500	0.194	0.00	0.00	.00	.0000	0.00	0.00	0.00	0.000	9805
MAR	0.00	0.00	717600	7176.00	0.0100	2.931	464	3480.00	7.500	0.194	0.00	0.00	.00	.0000	0.00	0.00	0.00	0.000	10655
APR	0.00	0.00	732200	7322.00	0.0100	2.931	470	3525.00	7.500	0.194	0.00	0.00	.00	.0000	0.00	0.00	0.00	0.000	10847
MAY	0.00	0.00	729300	7293.00	0.0100	2.931	441	3307.50	7.500	0.194	0.00	0.00	.00	.0000	0.00	0.00	0.00	0.000	10601
JUN	0.00	0.00	713600	7136.00	0.0100	2.931	272	2040.00	7.500	0.194	0.00	0.00	.00	.0000	0.00	0.00	0.00	0.000	9176
ANNUAL TOTALS	0.00	0.00	6927200	69272.00	**********	**********	5306	39793.43	**********	0.194	0.00	0.00	**********	**********	0.00	0.00	**********	**********	104065
ANNUAL AVERAGES	**********	**********	**********	**********	0.0100	2.931	**********	**********	7.500	0.19	**********	**********	0.00	0.0000	**********	**********	0.00	0.000	**********

ELECTRICITY 3412 BTU/KWH OIL: 9 2 42.340 MILLION BTU
OIL: 8 4 38.646 PER M. TON

GAS 36375 BTU/CUBIC MTR

OTHER 42340000 BTU/TON

SOLAR IS 02
RAZOUT IS 06

CLIENT CAIRO DYEINGSFINISHING CO.

PLANT SHOBRA TABLE B PAGE 1 OF 2

ENERGY CONSUMPTION PER PRODUCTION UNIT DOMESTIC PRICING

DATE JAN.10,1985
REV MAR.17,1985

DATA,YEARS 1983/84

MONTH	PRODUCTION UNITS PRODUCED X 1000	BTU TOT (MM BTU)	ELECTRICITY COST/UNIT (L.E.)	ELECTRICITY BTU/MONTH (MM BTU)	ELECTRICITY BTU/UNIT (MM BTU)	ELECTRICITY % OF BTU/MO	OIL,# 4 COST/UNIT (L.E.)	OIL,# 4 BTU/MONTH (MM BTU)	OIL,# 4 BTU/UNIT (MM BTU)	OIL,# 4 % OF BTU/MO	NATURAL GAS COST/UNIT (L.E.)	NATURAL GAS BTU/MONTH (MM BTU)	NATURAL GAS BTU/UNIT (MM BTU)	NATURAL GAS % OF BTU/MO	OTHER NONE COST/UNIT (L.E.)	OTHER NONE BTU/MONTH (MM BTU)	OTHER NONE BTU/UNIT (MM BTU)	OTHER NONE % OF BTU/MO	TOTAL COST PER UNIT (L.E.)
	21	22	23	24	25	26	27	28	29	30	31	32	33	34	35	36	37	38	39	40
JUL	2096	14694	2.239	1601	0.764	10.90	1.212	13093	6.247	89.10	0.00	0.00	0.00	0.00	0.00	0	0.000	0.00	3.451
AUG	4321	20726	1.056	1558	0.360	7.52	0.861	19168	4.436	92.48	0.00	0.00	0.00	0.00	0.00	0	0.000	0.00	1.917
SEP	3734	17111	1.267	1614	0.432	9.43	0.805	15497	4.150	90.57	0.00	0.00	0.00	0.00	0.00	0	0.000	0.00	2.072
OCT	4424	23600	1.041	1572	0.355	6.66	0.966	22028	4.979	93.34	0.00	0.00	0.00	0.00	0.00	0	0.000	0.00	2.007
NOV	4152	17568	1.516	2148	0.517	12.23	0.721	15420	3.714	87.77	0.00	0.00	0.00	0.00	0.00	0	0.000	0.00	2.237
DEC	3897	19187	1.119	1487	0.382	7.75	0.881	17700	4.542	92.25	0.00	0.00	0.00	0.00	0.00	0	0.000	0.00	2.000
JAN	3924	21213	1.268	1697	0.432	8.00	0.965	19516	4.974	92.00	0.00	0.00	0.00	0.00	0.00	0	0.000	0.00	2.233
FEB	3761	21064	1.628	2089	0.555	9.92	0.979	18975	5.045	90.08	0.00	0.00	0.00	0.00	0.00	0	0.000	0.00	2.607
MAR	3249	20380	2.209	2448	0.754	12.01	1.071	17932	5.519	87.99	0.00	0.00	0.00	0.00	0.00	0	0.000	0.00	3.280
APR	3326	20662	2.201	2498	0.751	12.09	1.060	18164	5.461	87.91	0.00	0.00	0.00	0.00	0.00	0	0.000	0.00	3.261
MAY	3110	19531	2.345	2488	0.800	12.74	1.064	17043	5.480	87.26	0.00	0.00	0.00	0.00	0.00	0	0.000	0.00	3.409
JUN	2249	12947	3.173	2435	1.083	18.81	0.907	10512	4.674	81.19	0.00	0.00	0.00	0.00	0.00	0	0.000	0.00	4.080
ANNUAL TOTALS	42243	228683	**********	23636	**********	**********	**********	205048	**********	**********	**********	0.00	**********	**********	**********	0	**********	**********	32.55
ANNUAL AVERAGE		19056.93	1.76	1970	0.60	10.34	0.96	17087	4.94	89.66	0.00	0.00	0.00	0.00	0.00	0.00	0.00	0.00	2.71

TABLE 8 PAGE 2 OF 2

MONTH	TOTAL BTU PER UNIT (MM BTU) 41	42
JUL		7.01
AUG		4.80
SEP		4.58
OCT		5.33
NOV		4.23
DEC		4.92
JAN		5.41
FEB		5.60
MAR		6.27
APR		6.21
MAY		6.28
JUN		5.76

ANNUAL TOTAL	66.41 MM BTU PER UNIT
ANNUAL AVERAGE	5.53 MM BTU PER UNIT

ABBREVIATIONS

MM BTU	MILLIONS OF BRITISH THERMAL UNITS
KWH	KILOWATT HOURS
L.E.	EGYPTIAN POUNDS
MCM	THOUSANDS OF CUBIC METERS

FILE: DYCOCD1

CLIENT CAIRO DYEING & FINISHING CO.

PLANT FIEEP TABLE C

DATA,YEARS 83/84

ENERGY CONSUMPTION SUMMARY DOMESTIC PRICING

DATE JAN.10,1985
REV MAR.30,1985

MONTH	HEATING DEGREE	COOLING DEGREE	ELECTRICITY QUANTITY	ELECTRICITY COST L.E.			OIL # 6 (SEE NOTE) QUANTITY	OIL # 6 COST L.E.			NATURAL GAS QUANTITY	NATURAL GAS COST L.E.			OTHER SOLAR QUANTITY	OTHER SOLAR COST L.E.			TOTAL ENERGY
1	2	3	4	5	6	7	8	9	10	11	12	13	14	15	16	17	18	19	20
JUL	0	0	264700	2647.00	0.0100	2.931	182	1365.00	7.500	0.194	0	0.00	.00	.0000	35	1267.20	36.00	0.850	5279
AUG	0	0	268300	2683.00	0.0100	2.931	267	2002.50	7.500	0.194	0	0.00	.00	.0000	24	871.20	36.00	0.850	5557
SEP	0	0	275000	2750.00	0.0100	2.931	216	1620.00	7.500	0.194	0	0.00	.00	.0000	18	651.60	36.00	0.850	5022
OCT	0	0	262300	2623.00	0.0100	2.931	307	2302.50	7.500	0.194	0	0.00	.00	.0000	58	2102.40	36.00	0.850	7028
NOV	0	0	401600	4016.00	0.0100	2.931	215	1612.50	7.500	0.194	0	0.00	.00	.0000	32	1166.40	36.00	0.850	6795
DEC	0	0	308600	3086.00	0.0100	2.931	246	1845.00	7.500	0.194	0	0.00	.00	.0000	30	1080.30	36.00	0.850	6011
JAN	0	0	321000	3210.00	0.0100	2.931	272	2040.00	7.500	0.194	0	0.00	.00	.0000	48	1739.80	36.00	0.850	6589
FEB	0	0	303800	3038.00	0.0100	2.931	264	1980.00	7.500	0.194	0	0.00	.00	.0000	43	1558.20	36.00	0.850	6[illegible]
MAR	0	0	247900	2479.00	0.0100	2.931	250	1875.00	7.500	0.194	0	0.00	.00	.0000	59	2136.40	36.00	0.850	6492
APR	0	0	516800	5168.00	0.0100	2.931	253	1897.50	7.500	0.194	0	0.00	.00	.0000	52	1879.20	36.00	0.850	8945
MAY	0	0	522100	5221.00	0.0100	2.931	237	1777.50	7.500	0.194	0	0.00	.00	.0000	34	1238.40	36.00	0.850	8237
JUN	0	0	532000	5[illegible]2.00	0.0100	2.931	147	1102.50	7.500	0.194	0	0.00	.00	.0000	5	183.60	36.00	0.850	6606
ANNUAL TOTALS	0	0	4224100	42241.00			2856	21420.00		0.194	0	0.00			446	16056.00			79717
ANNUAL AVERAGES					0.0100	2.931			7.500	0.19			0.00	0.0000			36.00	0.850	

NOTE: MAZOUT (OIL#6) QUANTITY IS 35%OF PLANT TOTAL CONSUMPTION

ELECTRICITY 3412 BTU/KWH

OIL: # 2 42.340 MILLION BTU

OIL: # 6 38.646 PER M. TON

GAS 36375 BTU/CUBIC MTR

OTHER 42340000 BTU/TON

SOLAR IS 02

MAZOUT IS 05

CLIENT CAIRO DYEING&FINISHING CO.

PLANT FIBER TABLE D PAGE 1 OF 2 ENERGY CONSUMPTION PER PRODUCTION UNIT DOMESTIC PRICING DATE JAN.10,1985
DATA,YEARS 1983/84 REV MAR.17,1985

MONTH	PRODUCTION UNITS PRODUCED X 1000	BTU TOT (MM BTU)	ELECTRICITY COST/UNIT (L.E.)	ELECTRICITY BTU/MONTH (MM BTU)	ELECTRICITY BTU/UNIT (MM BTU)	ELECTRICITY % OF BTU/MO	OIL,# 6 COST/UNIT (L.E.)	OIL,# 6 BTU/MONTH (MM BTU)	OIL,# 6 BTU/UNIT (MM BTU)	OIL,# 6 % OF BTU/MO	NATURAL GAS COST/UNIT (L.E.)	NATURAL GAS BTU/MONTH (MM BTU)	NATURAL GAS BTU/UNIT (MM BTU)	NATURAL GAS % OF BTU/MO	OTHER SOLAR COST/UNIT (L.E.)	OTHER SOLAR BTU/MONTH (MM BTU)	OTHER SOLAR BTU/UNIT (MM BTU)	OTHER SOLAR % OF BTU/MO	TOTAL COST PER UNIT (L.E.)
	21	22	23	24	25	26	27	28	29	30	31	32	33	34	35	36	37	38	39	40
JUL	1484	9427	1.784	903	0.609	9.58	0.920	7034	4.740	74.61	0	0	0	0.00	0.654	1490	1.004	15.81	3.257
AUG	2580	12259	1.040	915	0.355	7.47	0.776	10318	3.999	84.17	0	0	0	0.00	0.338	1025	0.397	8.36	2.154
SEP	1520	10052	1.809	938	0.617	9.33	1.066	8348	5.492	83.04	0	0	0	0.00	0.429	766	0.504	7.62	3.364
OCT	1494	15232	1.756	895	0.599	5.88	1.541	11864	7.941	77.89	0	0	0	0.00	1.407	2473	1.655	16.23	4.704
NOV	2316	11051	1.734	1370	0.592	12.40	0.696	8309	3.588	75.19	0	0	0	0.00	0.504	1372	0.592	12.41	2.924
DEC	1330	11830	2.320	1053	0.792	8.90	1.387	9507	7.146	80.36	0	0	0	0.00	0.812	1270	0.955	10.74	4.52[illegible]
JAN	1688	13652	1.502	1095	0.649	8.02	1.209	10512	6.227	77.00	0	0	0	0.00	1.030	2045	1.212	14.98	4.14[illegible]
FEB	1642	13284	1.850	1037	0.631	7.80	1.206	10203	6.213	76.80	0	0	0	0.00	1.059	2045	1.245	15.39	4.115
MAR	1188	13022	2.087	846	0.712	6.50	1.578	9662	8.133	74.19	0	0	0	0.00	1.800	2515	2.117	19.31	5.44[illegible]
APR	1148	13751	4.502	1763	1.536	12.82	1.653	9777	8.517	71.10	0	0	0	0.00	1.637	2210	1.925	16.07	7.79[illegible]
MAY	1318	12397	3.561	1761	1.352	14.27	1.349	9159	6.949	73.88	0	0	0	0.00	0.940	1456	1.105	11.75	6.2[illegible]
JUN	640	7712	8.313	1815	2.836	23.54	1.723	5681	8.877	73.66	0	0	0	0.00	0.287	216	0.337	2.80	10.32[illegible]
ANNUAL TOTALS	18348	143669	**********	14413	**********	********	********	110373	**********	********	**********	0	**********	********	**********	18884	**********	********	59.25[illegible]
ANNUAL AVERAGE		11972	2.755	1201	0.940	10.03	1.259	9198	6	76.82	0	0	0	0.00	0.925	1574	1.087	13.14	4.93[illegible]

TABLE 5 PAGE 2 OF 2

MONTH	TOTAL BTU PER UNIT (MM BTU) 41	42
JUL		6.35
AUG		4.72
SEP		5.61
OCT		10.20
NOV		4.77
DEC		8.25
JAN		8.09
FEB		8.09
MAR		10.96
APR		11.98
MAY		9.41
JUN		12.05

ANNUAL

TOTAL 102.15 MM BTU PER UNIT

ANNUAL

AVERAGE 8.51 MM BTU PER UNIT

ABBREVIATIONS

MM BTU	MILLIONS OF BRITISH THERMAL UNITS
KWH	KILOWATT HOURS
L.E.	EGYPTIAN POUNDS
MCM	THOUSANDS OF CUBIC METERS

FILE: DYCOEF1

CLIENT CAIRO DYEING & FINISHING CO.

PLANT SHOBRA TABLE E

DATA,YEARS 83/84

ENERGY CONSUMPTION SUMMARY WORLDWIDE PRICING

DATE JAN.10,1985
REV MAR.17,1985

MONTH	HEATING DEGREE DAYS	COOLING DEGREE DAYS	ELECTRICITY QUANTITY KWH	ELECTRICITY COST L.E. TOTAL L.E.	ELECTRICITY COST L.E. LE/KWH	ELECTRICITY COST L.E. LE/MMBTU	OIL # 6 (SEE NOTE) QUANTITY TONS,METRIC	OIL # 6 COST L.E. TOTAL LE	OIL # 6 COST L.E. LE/TON	OIL # 6 COST L.E. LE/MMBTU	NATURAL GAS QUANTITY MCM	NATURAL GAS COST L.E. TOTAL LE	NATURAL GAS COST L.E. LE/MCM	NATURAL GAS COST L.E. LE/MMBTU	OTHER NONE QUANTITY TONS,METRIC	OTHER NONE COST L.E. TOTAL LE	OTHER NONE COST L.E. LE/TON	OTHER NONE COST L.E. LE/MMBTU	TOTAL ENERGY COST
1	2	3	4	5	6	7	8	9	10	11	12	13	14	15	16	17	18	19	20
JUL	0.00	0.00	469300	43175.60	0.0920	26.964	339	81919.42	241.800	6.257	0.00	0.00	.00	.0000	0.00	0.00	0.00	0.000	125095
AUG	0.00	0.00	456500	41998.00	0.0920	26.964	496	119932.80	241.800	6.257	0.00	0.00	.00	.0000	0.00	0.00	0.00	0.000	161931
SEP	0.00	0.00	473000	43516.00	0.0920	26.964	401	96961.80	241.800	6.257	0.00	0.00	.00	.0000	0.00	0.00	0.00	0.000	140478
OCT	0.00	0.00	460600	42375.20	0.0920	26.964	570	137826.00	241.800	6.257	0.00	0.00	.00	.0000	0.00	0.00	0.00	0.000	180201
NOV	0.00	0.00	629600	57923.20	0.0920	26.964	399	96478.20	241.800	6.257	0.00	0.00	.00	.0000	0.00	0.00	0.00	0.000	154401
DEC	0.00	0.00	435900	40102.80	0.0920	26.964	458	110744.40	241.800	6.257	0.00	0.00	.00	.0000	0.00	0.00	0.00	0.000	150847
JAN	0.00	0.00	497400	45760.80	0.0920	26.964	505	122109.00	241.800	6.257	0.00	0.00	.00	.0000	0.00	0.00	0.00	0.000	167870
FEB	0.00	0.00	612200	56322.40	0.0920	26.964	491	118723.80	241.800	6.257	0.00	0.00	.00	.0000	0.00	0.00	0.00	0.000	175046
MAR	0.00	0.00	717600	66019.20	0.0920	26.964	464	112195.20	241.800	6.257	0.00	0.00	.00	.0000	0.00	0.00	0.00	0.000	178214
APR	0.00	0.00	732200	67362.40	0.0920	26.964	470	113646.00	241.800	6.257	0.00	0.00	.00	.0000	0.00	0.00	0.00	0.000	181008
MAY	0.00	0.00	729300	67095.60	0.0920	26.964	441	106633.80	241.800	6.257	0.00	0.00	.00	.0000	0.00	0.00	0.00	0.000	173729
JUN	0.00	0.00	713600	65651.20	0.0920	26.964	272	65769.60	241.800	6.257	0.00	0.00	.00	.0000	0.00	0.00	0.00	0.000	131421
ANNUAL TOTALS	0.00	0.00	6927200	637302.40	**********	**********	5306	1282940.02	**********	6.257	0.00	0.00	**********	**********	0.00	0.00	**********	**********	1920242
ANNUAL AVERAGES	**********	**********	**********	**********	0.0920	26.964	**********	**********	241.800	6.26	**********	**********	0.00	0.0000	**********	**********	0.00	0.000	**********

NOTE: MAZOUT(OIL#6)QUANTITY IS 65%OF PLANT TOTAL CONSUMPTION

ELECTRICITY 3412 BTU/KWH

OIL: 0 2 42.340 MILLION BTU
OIL: 0 6 38.646 PER M. TON

GAS 36375 BTU/CUBIC MTR

OTHER 42340000 BTU/TON

SULAR IS 02
MAZOUT IS 06

CLIENT CAIRO DYEING&FINISHING CO.

PLANT SHOBRA TABLE F PAGE 1 OF 2 ENERGY CONSUMPTION PER PRODUCTION UNIT WORLDWISE PRICING DATE JAN.10,1985
DATA,YEARS 1983/84 REV MAR.17,1985

MONTH	PRODUCTION UNITS PRODUCED X 1000	BTU TOT (MM BTU)	ELECTRICITY COST/UNIT (L.E.)	ELECTRICITY BTU/MONTH (MM BTU)	ELECTRICITY BTU/UNIT (MM BTU)	ELECTRICITY % OF BTU/MO	OIL,# 6 COST/UNIT (L.E.)	OIL,# 6 BTU/MONTH (MM BTU)	OIL,# 6 BTU/UNIT (MM BTU)	OIL,# 6 % OF BTU/MO	NATURAL GAS COST/UNIT (L.E.)	NATURAL GAS BTU/MONTH (MM BTU)	NATURAL GAS BTU/UNIT (MM BTU)	NATURAL GAS % OF BTU/MO	OTHER NONE COST/UNIT (L.E.)	OTHER NONE BTU/MONTH (MM BTU)	OTHER NONE BTU/UNIT (MM BTU)	OTHER NONE % OF BTU/MO	TOTAL COST PER UNIT (L.E.)
	21	22	23	24	25	26	27	28	29	30	31	32	33	34	35	36	37	38	39	40
JUL	2096	14694	20.599	1601	0.764	10.99	39.084	13093	6.247	89.10	0.00	0.00	0.00	0.00	0.00	0	0.000	0.00	59.683
AUG	4321	20726	9.720	1558	0.360	7.52	27.756	19168	4.436	92.48	0.00	0.00	0.00	0.00	0.00	0	0.000	0.00	37.475
SEP	3734	17111	11.654	1614	0.432	9.43	25.967	15497	4.150	90.57	0.00	0.00	0.00	0.00	0.00	0	0.000	0.00	37.621
OCT	4424	23600	9.578	1572	0.355	6.66	31.154	22028	4.979	93.34	0.00	0.00	0.00	0.00	0.00	0	0.000	0.00	40.733
NOV	4152	17568	13.951	2148	0.517	12.23	23.237	15420	3.714	87.77	0.00	0.00	0.00	0.00	0.00	0	0.000	0.00	37.187
DEC	3897	19187	10.291	1487	0.382	7.75	28.418	17700	4.542	92.25	0.00	0.00	0.00	0.00	0.00	0	0.000	0.00	38.709
JAN	3924	21213	11.662	1697	0.432	8.00	31.119	19516	4.974	92.00	0.00	0.00	0.00	0.00	0.00	0	0.000	0.00	42.780
FEB	3761	21064	14.975	2089	0.555	9.92	31.567	18975	5.045	90.08	0.00	0.00	0.00	0.00	0.00	0	0.000	0.00	46.542
MAR	3249	20380	20.320	2448	0.754	12.01	34.532	17932	5.519	87.99	0.00	0.00	0.00	0.00	0.00	0	0.000	0.00	54.852
APR	3326	20662	20.253	2498	0.751	12.09	34.169	18164	5.461	87.91	0.00	0.00	0.00	0.00	0.00	0	0.000	0.00	54.422
MAY	3110	19531	21.574	2488	0.800	12.74	34.287	17043	5.480	87.26	0.00	0.00	0.00	0.00	0.00	0	0.000	0.00	55.862
JUN	2249	12947	29.191	2435	1.083	18.81	29.244	10512	4.674	81.19	0.00	0.00	0.00	0.00	0.00	0	0.000	0.00	58.435
ANNUAL TOTALS	42243	228683	**********	23636	**********	********	*********	205048	*********	*********	*********	0.00	*********	*********	*********	0	*********	********	564.30
ANNUAL AVERAGE		19056.93	16.15	1970	0.60	10.34	30.88	17087	4.94	89.66	0.00	0.00	0.00	0.00	0.00	0.00	0.00	0.00	47.03

TABLE F PAGE 2 OF 2

MONTH	TOTAL BTU PER UNIT (MM BTU) 41	42
JUL		7.01
AUG		4.80
SEP		4.58
OCT		5.33
NOV		4.23
DEC		4.92
JAN		5.41
FEB		5.60
MAR		6.27
APR		6.21
MAY		6.28
JUN		5.76

ANNUAL TOTAL	66.41 MM BTU PER UNIT	
ANNUAL AVERAGE	5.53 MM BTU PER UNIT	

ABBRIEVIATIONS

MM BTU	MILLIONS OF BRITISH THERMAL UNITS
KWH	KILOWATT HOURS
L.E.	EGYPTIAN POUNDS
MCM	THOUSANDS OF CUBIC METERS

FILE: DYCOSH

CLIENT CAIRO DYEING & FINISHING CO.

PLANT DATA, YEARS 83/84 FIBER TABLE 6

ENERGY CONSUMPTION SUMMARY WORLDWIDE PRICING

DATE REV JAN.10,1985 MAR.30,1985

MONTH	HEATING DEGREE DAYS	COOLING DEGREE DAYS	ELECTRICITY QUANTITY KWH	ELECTRICITY COST L.E. TOTAL L.E.	ELECTRICITY COST L.E. LE/KWH	ELECTRICITY COST L.E. LE/MMBTU	OIL 8 & (SEE NOTE) QUANTITY TONS,METRIC	OIL 8 COST L.E. TOTAL LE	OIL 8 COST L.E. LE/TON	OIL 8 COST L.E. LE/MMBTU	NATURAL GAS QUANTITY MCM	NATURAL GAS COST L.E. TOTAL LE	NATURAL GAS COST L.E. LE/MCM	NATURAL GAS COST L.E. LE/MMBTU	OTHER SOLAR QUANTITY TONS,METRIC	OTHER SOLAR COST L.E. TOTAL LE	OTHER SOLAR COST L.E. LE/TON	OTHER SOLAR COST L.E. LE/MMBTU	TOTAL ENERGY COST
1	2	3	4	5	6	7	8	9	10	11	12	13	14	15	16	17	18	19	20
JUL	0	0	264700	24352.40	0.0920	26.964	182	44007.60	241.800	6.257	0	0.00	.00	.0000	35	11440.00	325.00	7.676	79800
AUG	0	0	268300	24683.60	0.0920	26.964	267	64560.60	241.800	6.257	0	0.00	.00	.0000	24	7865.00	325.00	7.676	97109
SEP	0	0	275000	25300.00	0.0920	26.964	216	52228.80	241.800	6.257	0	0.00	.00	.0000	18	5882.50	325.00	7.676	83411
OCT	0	0	262300	24131.60	0.0920	26.964	307	74232.60	241.800	6.257	0	0.00	.00	.0000	58	18980.00	325.00	7.676	117344
NOV	0	0	401600	36947.20	0.0920	26.964	215	51987.00	241.800	6.257	0	0.00	.00	.0000	32	10530.00	325.00	7.676	99464
DEC	0	0	308600	28391.20	0.0920	26.964	246	59492.80	241.800	6.257	0	0.00	.00	.0000	30	9750.00	325.00	7.676	97624
JAN	0	0	321000	29532.00	0.0920	26.964	272	65769.60	241.800	6.257	0	0.00	.00	.0000	48	15697.50	325.00	7.676	110999
FEB	0	0	303800	27949.60	0.0920	26.964	264	63835.20	241.800	6.257	0	0.00	.00	.0000	48	15697.50	325.00	7.676	107482
MAR	0	0	247900	22806.80	0.0920	26.964	250	60450.00	241.800	6.257	0	0.00	.00	.0000	59	19305.00	325.00	7.676	102562
APR	0	0	516800	47545.60	0.0920	26.964	253	61175.40	241.800	6.257	0	0.00	.00	.0000	52	16965.00	325.00	7.676	125586
MAY	0	0	522100	48033.20	0.0920	26.964	237	57306.60	241.800	6.257	0	0.00	.00	.0000	34	11180.00	325.00	7.676	116520
JUN	0	0	532000	48944.00	0.0920	26.964	147	35544.60	241.800	6.257	0	0.00	.00	.0000	5	1657.50	325.00	7.676	86146
ANNUAL TOTALS	0	0	4224100	388617.20			2856	690580.80		6.257	0	0.00			446	144950.00			1224148
ANNUAL AVERAGES					0.0920	26.964			241.800	6.26			0.00	0.0000			325.00	7.676	

NOTE: MAZOUT (OIL 86) QUANTITY IS 35% OF PLANT TOTAL CONSUMPTION

ELECTRICITY 3412 BTU/KWH

OIL: 8 2 42.340 MILLION BTU
OIL: 8 6 38.646 PER M. TON

GAS 36375 BTU/CUBIC MTR

OTHER 42340000 BTU/TON

SOLAR IS 82
MAZOUT IS 86

CLIENT CAIRO DYEING & FINISHING CO.

PLANT FIBER TABLE H PAGE 1 OF 2 - ENERGY CONSUMPTION PER PRODUCTION UNIT WORLDWID PRICING DATE JAN.10,1985
DATA,YEARS 1983/84 REV MAR.17,1985

MONTH	PRODUCTION UNITS PRODUCED X 1000	BTU TOT (MM BTU)	ELECTRICITY COST/UNIT (L.E.)	ELECTRICITY BTU/MONTH (MM BTU)	ELECTRICITY BTU/UNIT (MM BTU)	ELECTRICITY % OF BTU/MO	OIL,8 6 COST/UNIT (L.E.)	OIL,8 6 BTU/MONTH (MM BTU)	OIL,8 6 BTU/UNIT (MM BTU)	OIL,8 6 % OF BTU/MO	NATURAL GAS COST/UNIT (L.E.)	NATURAL GAS BTU/MONTH (MM BTU)	NATURAL GAS BTU/UNIT (MM BTU)	NATURAL GAS % OF BTU/MO	OTHER SOLAR COST/UNIT (L.E.)	OTHER SOLAR BTU/MONTH (MM BTU)	OTHER SOLAR BTU/UNIT (MM BTU)	OTHER SOLAR % OF BTU/MO	TOTAL COST PER UNIT (L.E.)
21	22	23	24	25	26	27	28	29	30	31	32	33	34	35	36	37	38	39	40
JUL	1424	9427	16.459	903	0.609	9.58	29.655	7034	4.740	74.61	0	0	0	0.00	7.709	1490	1.004	15.81	53.774
AUG	2580	12259	9.567	915	0.355	7.47	25.023	10316	3.999	84.17	0	0	0	0.00	3.048	1025	0.397	8.36	37.639
SEP	1520	10052	16.645	938	0.617	9.33	38.361	8348	5.492	83.04	0	0	0	0.00	3.870	766	0.504	7.62	54.876
OCT	1494	15232	16.152	895	0.599	5.88	49.687	11864	7.941	77.89	0	0	0	0.00	12.704	2473	1.655	16.23	78.544
NOV	2316	11051	15.953	1370	0.592	12.40	22.447	8309	3.588	75.19	0	0	0	0.00	4.547	1372	0.592	12.41	42.947
DEC	1330	11830	21.347	1053	0.792	8.90	44.724	9507	7.148	80.36	0	0	0	0.00	7.331	1270	0.955	10.74	73.402
JAN	1688	13652	17.495	1095	0.649	8.02	38.963	10512	6.227	77.00	0	0	0	0.00	9.299	2045	1.212	14.98	65.756
FEB	1642	13284	17.022	1037	0.631	7.80	38.876	10203	6.213	76.80	0	0	0	0.00	9.560	2045	1.245	15.39	65.458
MAR	1168	13022	19.198	846	0.712	6.50	50.884	9662	8.133	74.19	0	0	0	0.00	16.250	2515	2.117	19.31	86.331
APR	1148	13751	41.416	1763	1.536	12.82	53.289	9777	8.517	71.10	0	0	0	0.00	14.778	2210	1.925	16.07	109.483
MAY	1318	12397	36.444	1781	1.352	14.37	43.480	9159	6.949	73.88	0	0	0	0.00	8.483	1456	1.105	11.75	88.407
JUN	640	7712	76.475	1815	2.836	23.54	55.538	5681	8.877	73.66	0	0	0	0.00	2.590	216	0.337	2.80	134.603
ANNUAL TOTALS	18348	143669	**********	14413	**********	*********	*********	110373	*********	*********	*********	0	*********	*********	*********	18884	*********	********	891.220
ANNUAL AVERAGE		11972	25.344	1201	0.940	10.03	40.577	9198	6.485	76.82	0	0	0	0.00	8.347	1574	1.087	13.14	74.268

TABLE 4 PAGE 2 OF 2

MONTH	TOTAL BTU PER UNIT (M BTU) 41	42
JUL		6.35
AUG		8.75
SEP		6.61
OCT		10.20
NOV		4.77
DEC		8.69
JAN		8.09
FEB		8.09
MAR		10.96
APR		11.98
MAY		9.41
JUN		12.05

ANNUAL TOTAL	102.15 MM BTU PER UNIT	
ANNUAL AVERAGE	8.51 MM BTU PER UNIT	

ABBREVIATIONS

MM BTU	MILLIONS OF BRITISH THERMAL UNITS
KWH	KILOWATT HOURS
L.E.	EGYPTIAN POUNDS
MCM	THOUSANDS OF CUBIC METERS

PLOT 1

Shobra Plant

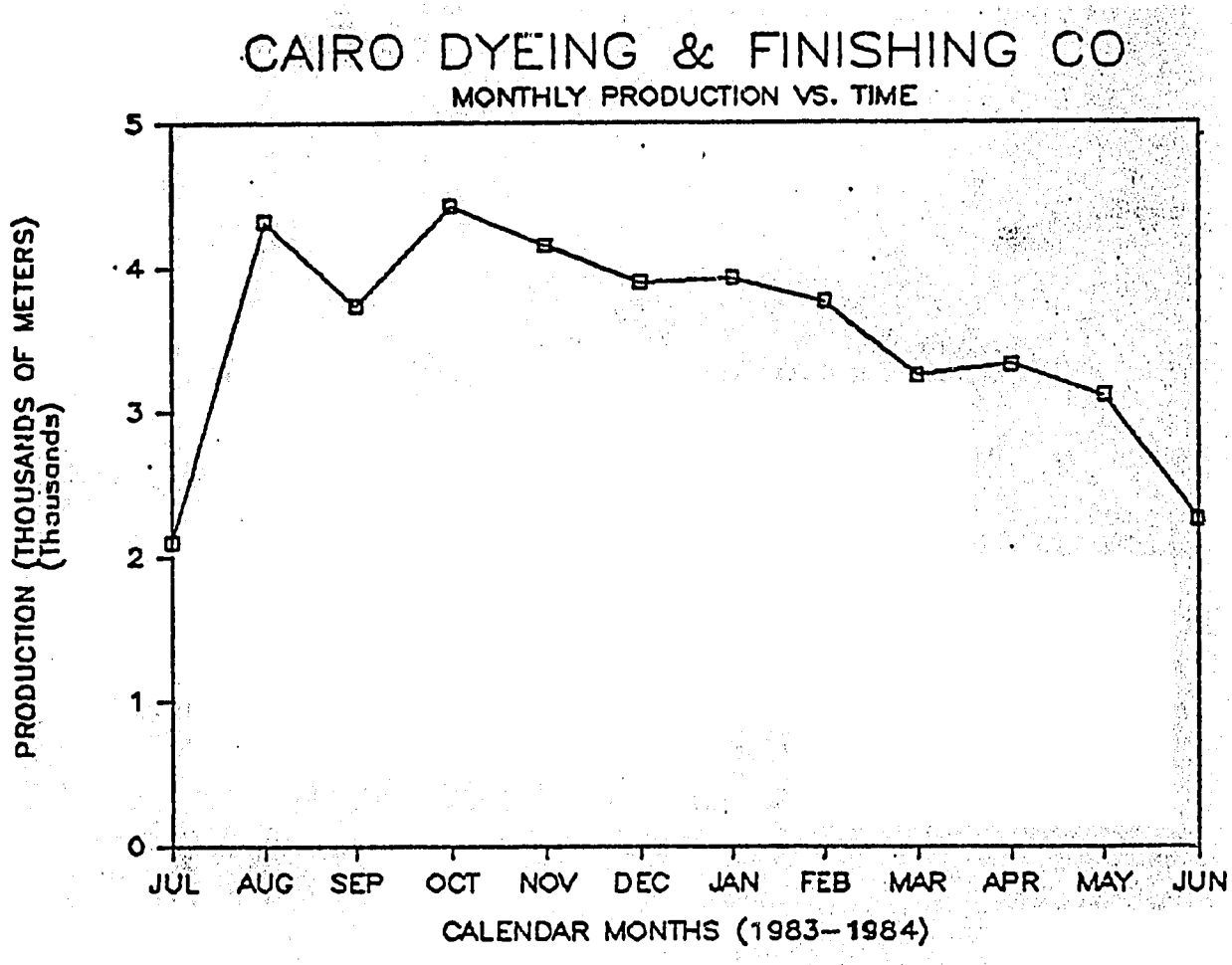

PLOT 2

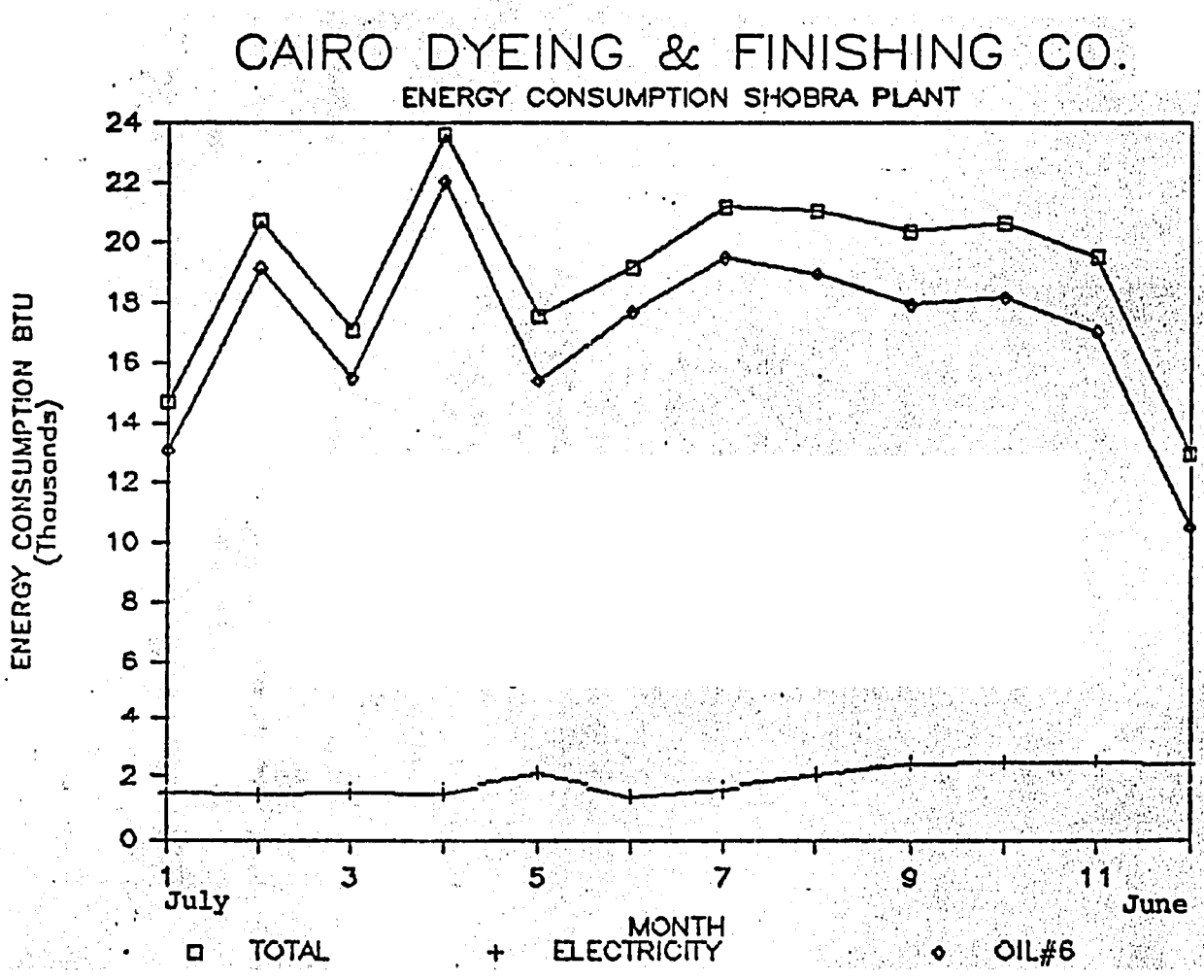
CAIRO DYEING & FINISHING CO.
ENERGY CONSUMPTION SHOBRA PLANT
ENERGY CONSUMPTION BTU
(Thousands)
24
22
20
18
16
14
12
10
8
6
4
2
0
1
July
3
5
7
9
11
June
MONTH
TOTAL
ELECTRICITY
OIL#6

PLOT 3

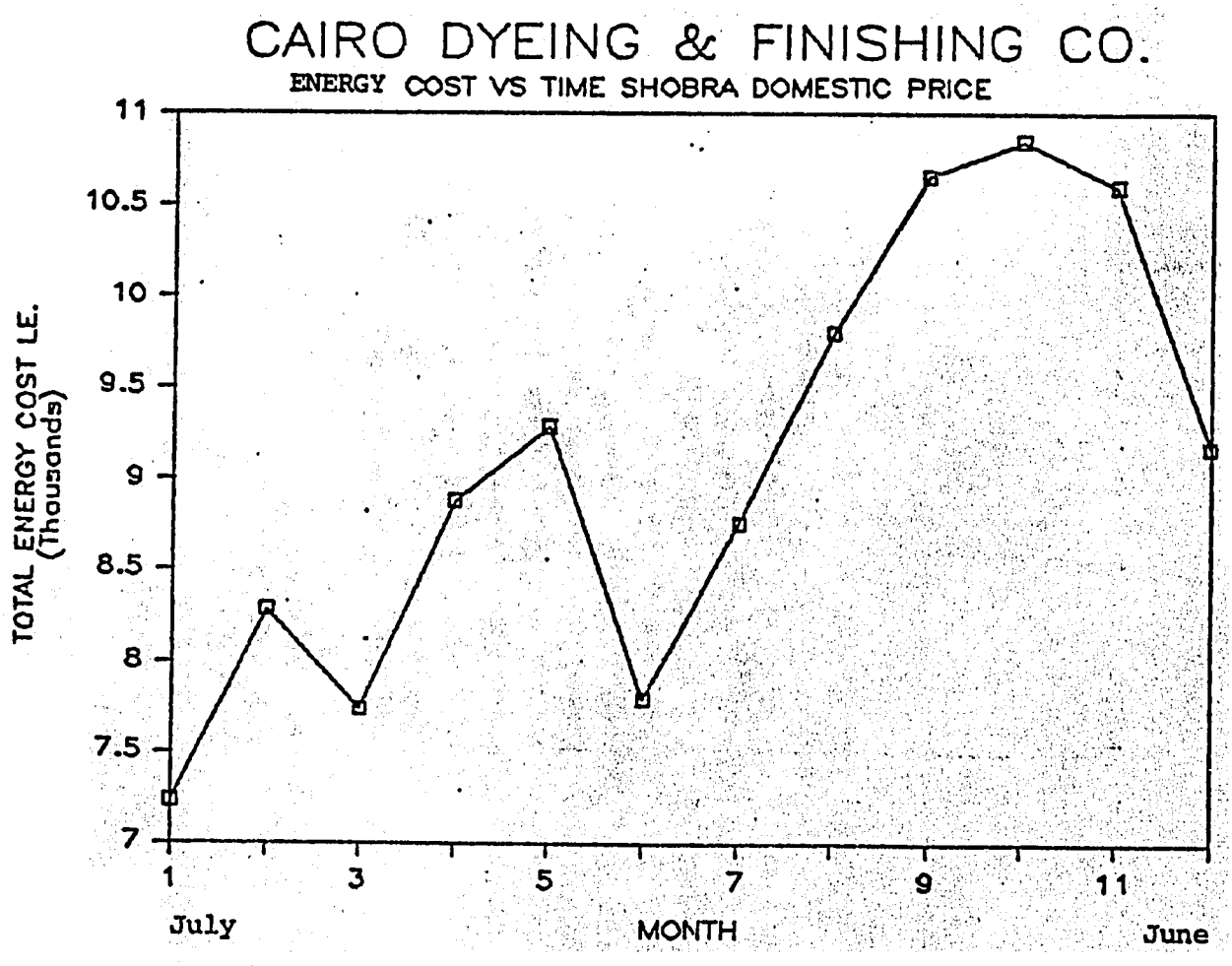
CAIRO DYEING & FINISHING CO.
ENERGY COST VS TIME SHOBRA DOMESTIC PRICE
TOTAL ENERGY COST LE.
(Thousands)
11
10.5
10
9.5
9
8.5
8
7.5
7
1
3
5
7
9
11
July
MONTH
June

PLOT 4

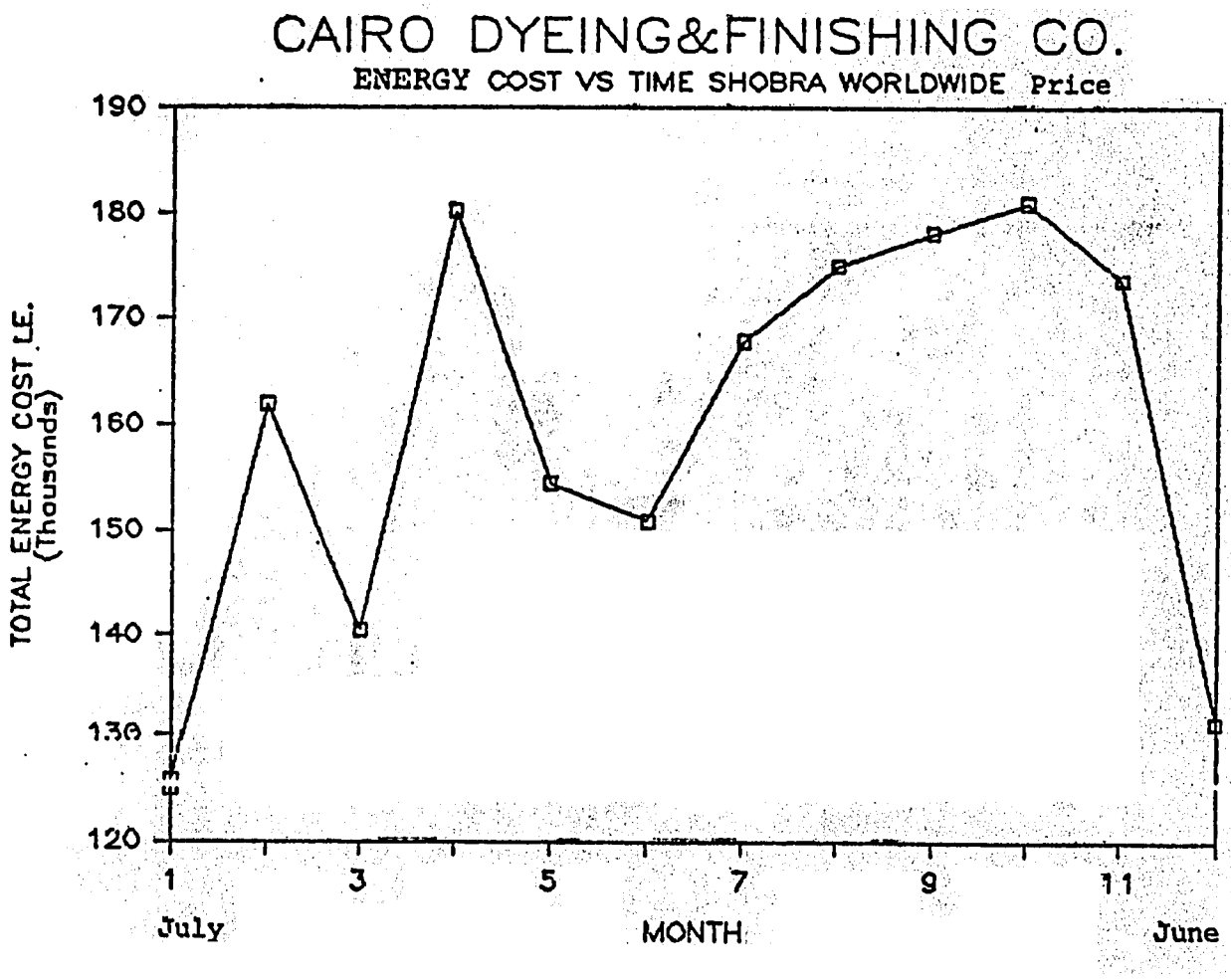
CAIRO DYEING&FINISHING CO.
ENERGY COST VS TIME SHOBRA WORLDWIDE Price
TOTAL ENERGY COST LE.
(Thousands)
190
180
170
160
150
140
130
120
1
3
5
7
9
11
July
MONTH
June

PLOT 5

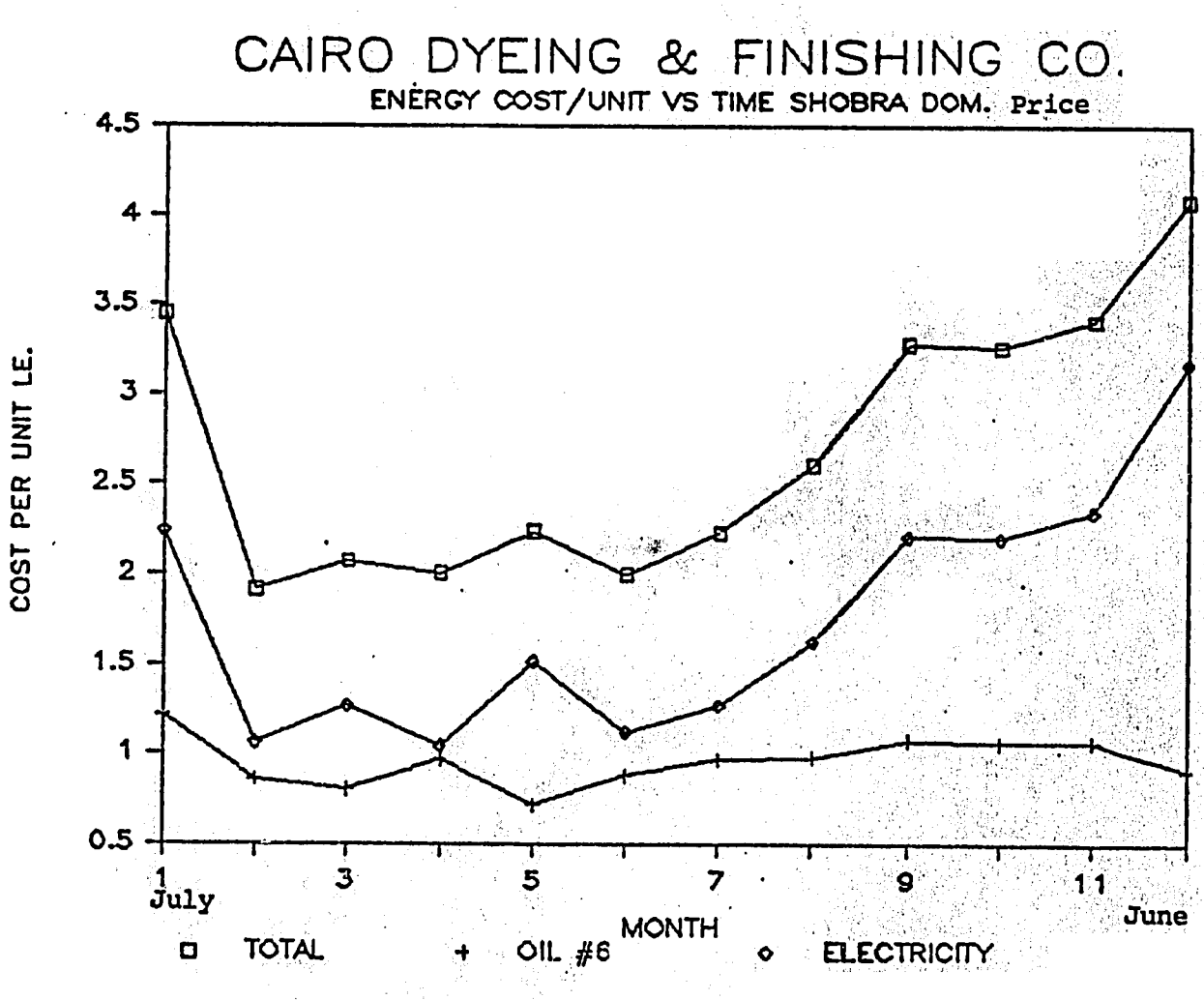
CAIRO DYEING & FINISHING CO.
ENERGY COST/UNIT VS TIME SHOBRA DOM. Price
COST PER UNIT LE.
4.5
4
3.5
3
2.5
2
1.5
1
0.5
1
July
3
5
7
9
11
June
MONTH
TOTAL
OIL #6
ELECTRICITY

PLOT 6

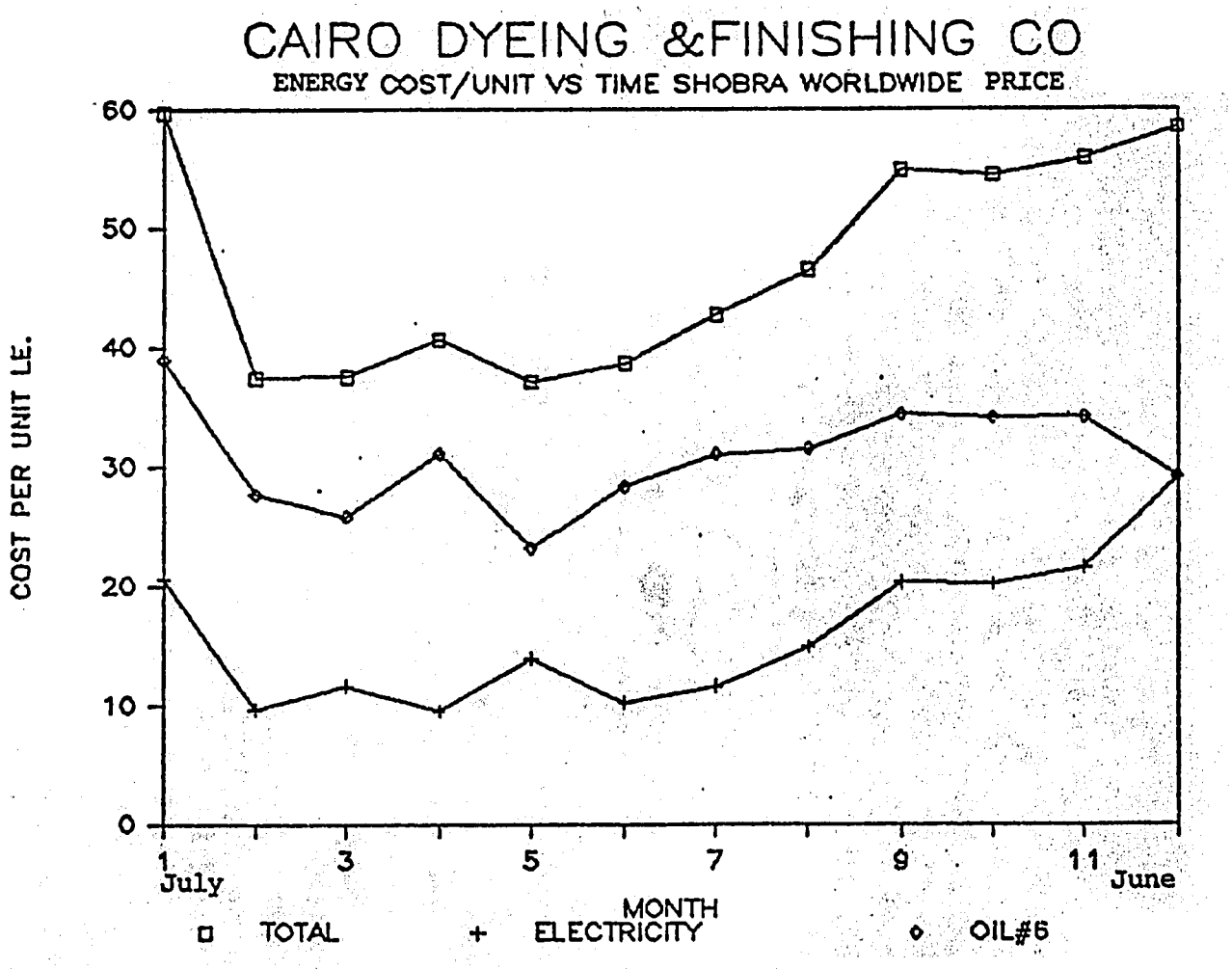
CAIRO DYEING &FINISHING CO
ENERGY COST/UNIT VS TIME SHOBRA WORLDWIDE PRICE
COST PER UNIT LE.
60
50
40
30
20
10
0
1
July
3
5
7
9
11
June
MONTH
TOTAL
ELECTRICITY
OIL#6

PLOT 7

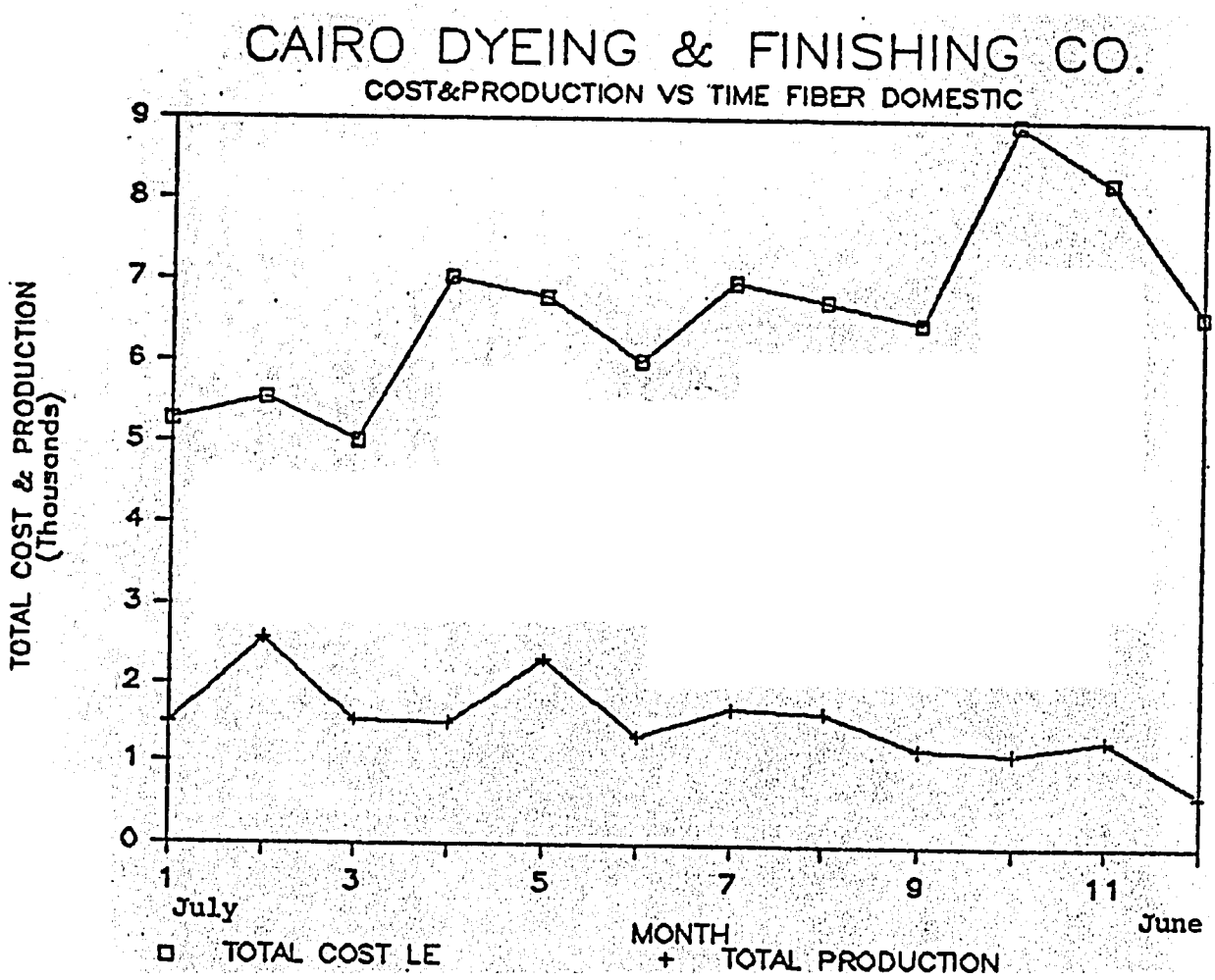
CAIRO DYEING & FINISHING CO.
COST&PRODUCTION VS TIME FIBER DOMESTIC
TOTAL COST & PRODUCTION (Thousands)
0
1
2
3
4
5
6
7
8
9
1
3
5
7
9
11
July
June
MONTH
TOTAL COST LE
TOTAL PRODUCTION

PLOT 8

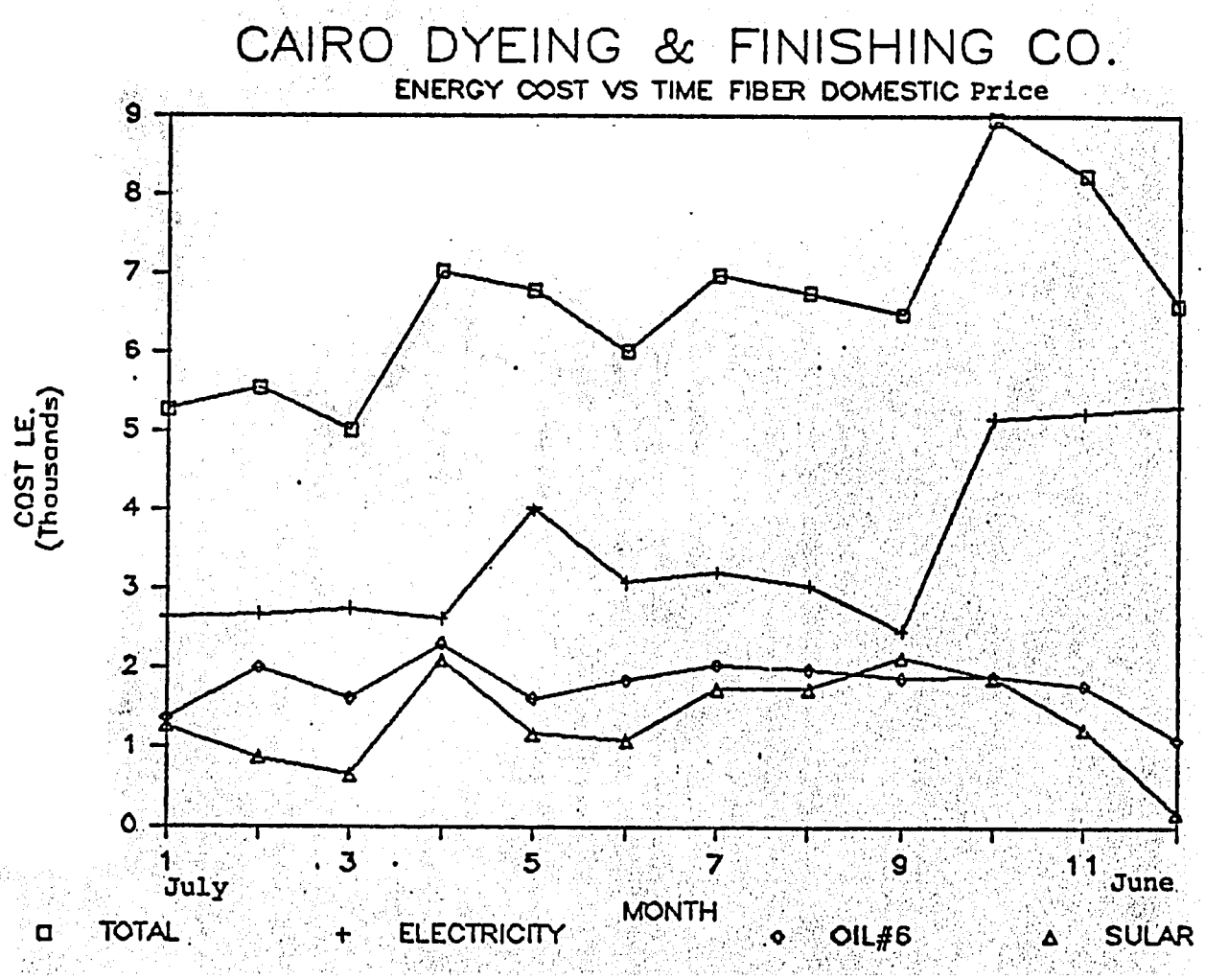
CAIRO DYEING & FINISHING CO.
ENERGY COST VS TIME FIBER DOMESTIC Price
COST LE. (Thousands)
0
1
2
3
4
5
6
7
8
9
1
July
3
5
7
9
11
June
MONTH
TOTAL
ELECTRICITY
OIL#6
SULAR

PLOT 9

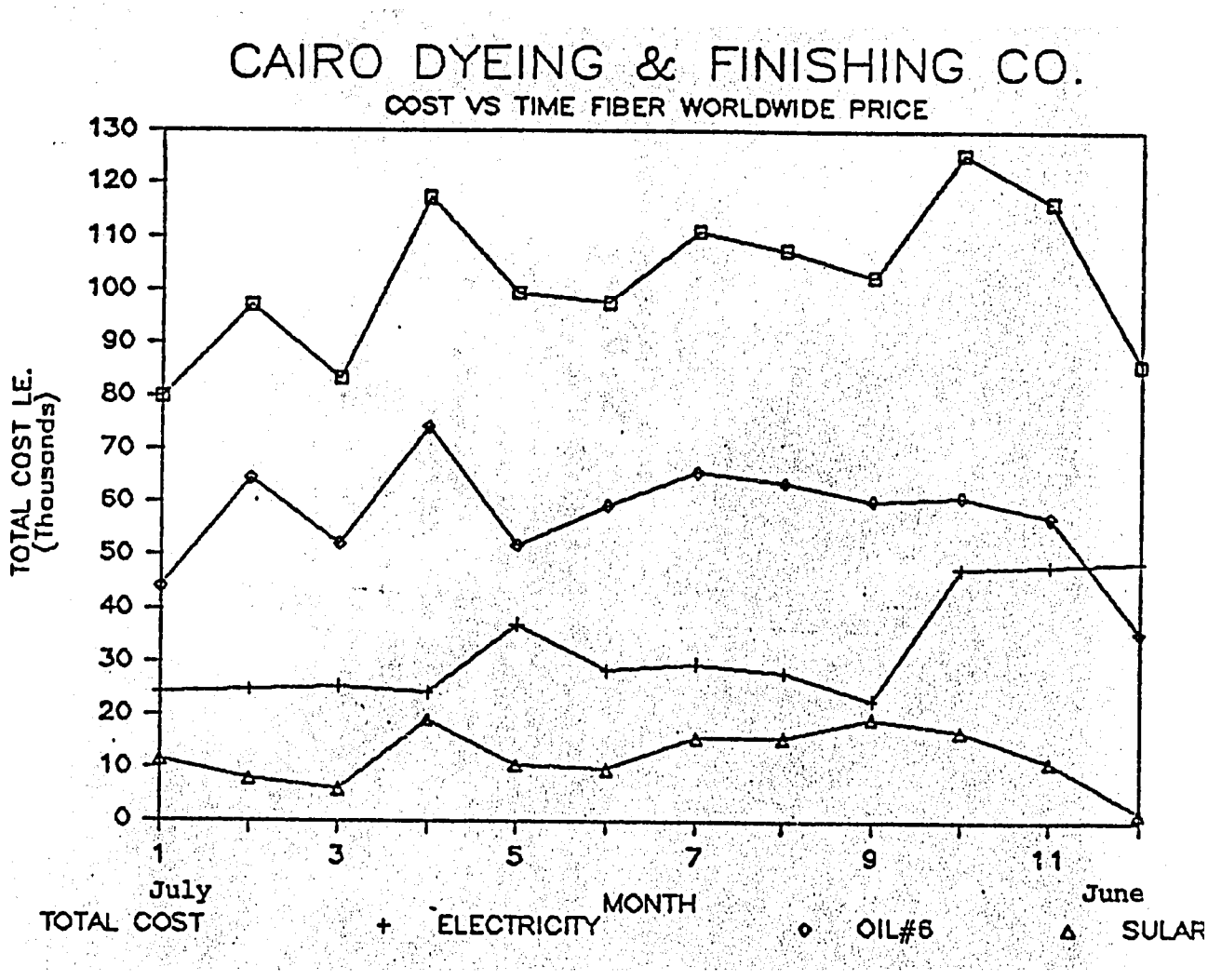
CAIRO DYEING & FINISHING CO.
COST VS TIME FIBER WORLDWIDE PRICE
TOTAL COST LE. (Thousands)
130
120
110
100
90
80
70
60
50
40
30
20
10
0
1
3
5
7
9
11
July
June
MONTH
TOTAL COST
+ ELECTRICITY
◇ OIL#6
△ SULAR

PLOT 10

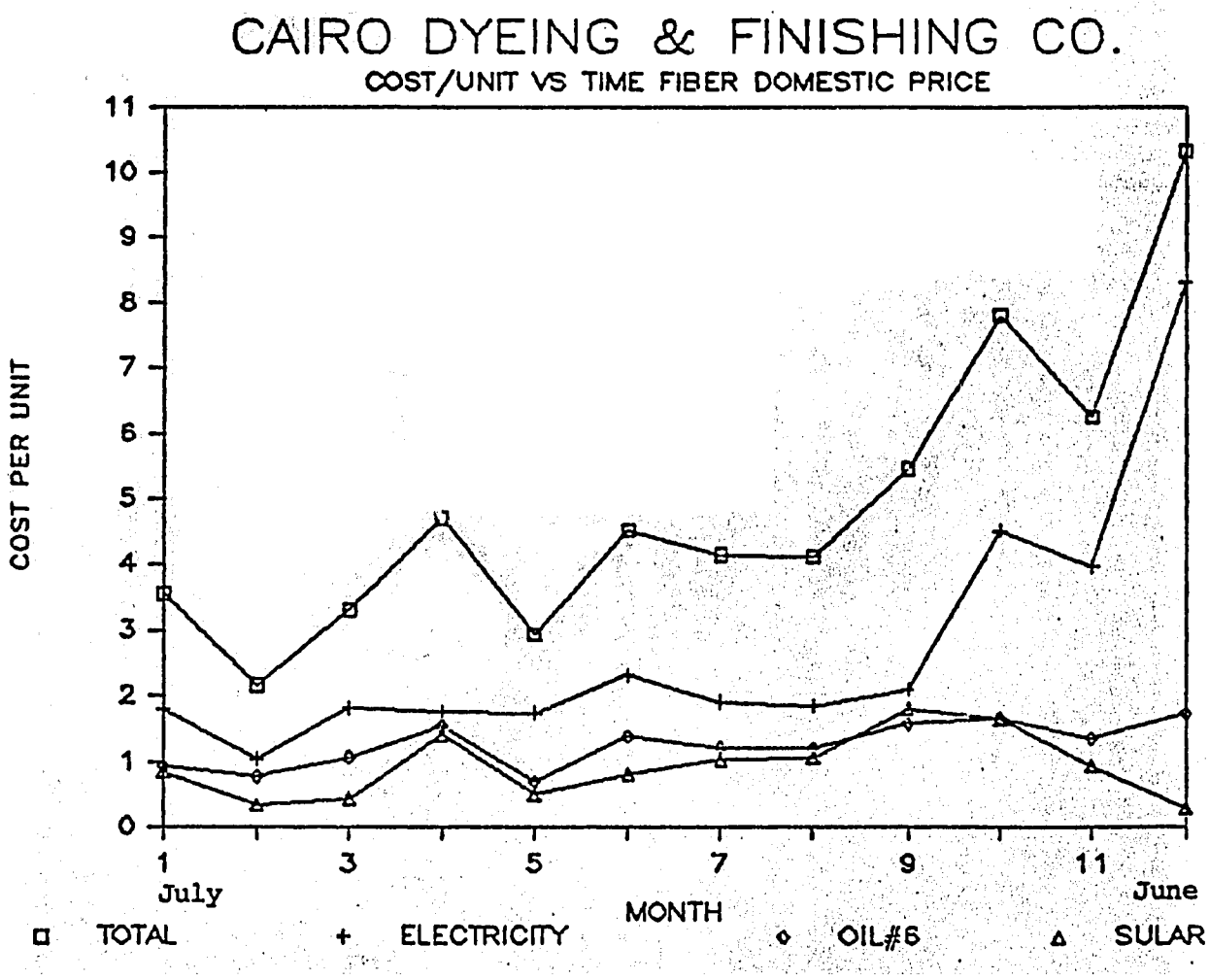
CAIRO DYEING & FINISHING CO.
COST/UNIT VS TIME FIBER DOMESTIC PRICE
COST PER UNIT
11
10
9
8
7
6
5
4
3
2
1
0
1
3
5
7
9
11
July
June
MONTH
TOTAL
ELECTRICITY
OIL#6
SULAR

PLOT 11

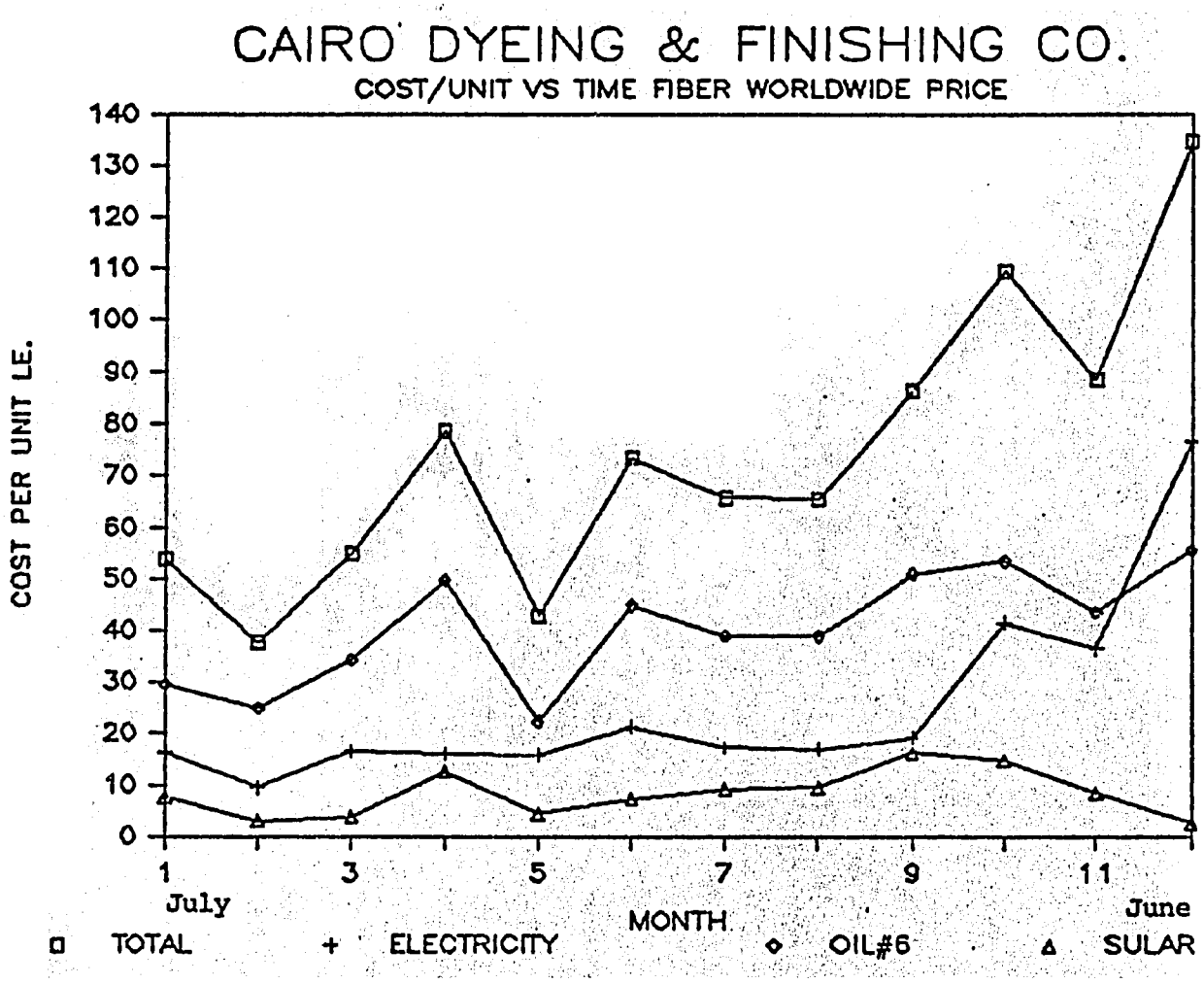
CAIRO DYEING & FINISHING CO.
COST/UNIT VS TIME FIBER WORLDWIDE PRICE
COST PER UNIT LE.
140
130
120
110
100
90
80
70
60
50
40
30
20
10
0
1
3
5
7
9
11
July
June
MONTH
TOTAL
ELECTRICITY
OIL#6
SULAR

3.5 ECONOMIC EVALUATION

In carrying out economic evaluations for each of the potential energy conservation opportunities involving an investment, the following steps must be taken:

- Establish utility costs/economic criteria
- Develop energy savings
- Estimate investment cost
- Decide if project is attractive

For this energy audit the utility costs are defined in the Basic Engineering Data contained in Appendix "A".

The worldwide cost of the utilities involved are used, in each case being evaluated, in order to establish a realistic value for the energy savings. The criteria for evaluation which is used in each case is simple payout, defined as estimated investment cost divided by annual savings. This criteria is simple to use and is very effective in establishing a priority listing for a group of potential projects.

As a part of the evaluation a simplified design is developed which contains enough detail to establish an estimated investment cost. The key information needed for any evaluation is an estimate of the energy saved and an estimate of the investment cost. Since these two topics are so crucial to an effective audit, each of them are discussed separately in the sections which follow.

3.5.1 Value of Energy Saved

The first step in predicting the value of the energy saved for any energy conservation opportunity (ECO) is to establish the energy consumption of the current operation or the so called "base case". Once the base case is established, the ECO must be compared to it to determine exactly what energy savings would take place, if the ECO were to be implemented. The savings are normally first calculated on an hourly basis in terms of the units of energy normally used, for example KWH per hour for electricity or tons/hr for mazout.

The next step is to calculate the energy savings on an annual basis taking into account the number of days per week the plant operates, shutdowns for maintenance, and the number of shifts used for each operating day. Once this is done, the annual energy savings is converted into Egyptian pounds (LE) through the use of the world wide cost data for utilities given in Appendix "A".

3.5.2 ESTIMATING INVESTMENT COST

Each ECO which requires the expenditure of money regardless of whether it is a low cost or an investment ECO has been provided with an individual estimate of costs. These estimates are of a budgetary nature and have a degree of accuracy of plus/minus twenty-five percent.

The majority of the estimates, especially those which are well defined, are estimated using a "definitive" type formate enumerating and quantifying, where possible, each discipline of work. Material and installation manhours are estimated separately. In those cases in which the process equipment represents the large majority of the cost, and the bulk materials can not be accurately defined, the estimate was done using a factored technique for bulk materials and labor.

Engineering data and technical information used in preparation of each estimate is based on the equipment list and technical description provided for each E.C.O. as prepared by the responsible engineer and shown with sketches or schematic drawings when required. A site visit, for familiarization purposes, was made by the estimator to the existing facility.

The CHEMCOST computerized estimating Program has been utilized, where possible, for estimating equipment cost, especially on larger or more well defined equipment.

The estimates are done using United States material pricing and United States standard construction manhours as a base line. The material costs are

adjusted for a world wide pricing basis and then the dollar (US) value has been converted to Egyptian pounds at the rate of 1.30 LE = $1.00(US). The worldwide pricing adjustment is based on historical data and experience in worldwide procurement and construction. It represents a sampling of purchased materials from Engineering offices in England, France, United States, Italy and Spain which includes Far East manufactured materials purchases from these locations.

Construction manhours have been adjusted from a base line representing a U.S. Gulf coast location to the productivity realized in previous Foster Wheeler projects carried out in Egypt. Once again world wide experience was used as the primary determinent on productivity adjustment. Other factors were considered such as the size and complexity of each item of work, the amount of engineering that will be provided, the amount and type of supervision and who will be executing the work (in-plant personnel, contractor etc.).

Labor rates for construction crafts in Egypt were obtained from Foster Wheeler's Labor relations Dept., local Egyptian contractors, and rates published in Engineering News magazine.

Each estimate includes:

a) Indirect costs, which include construction supervision, major tools, temporary facilities subcontractor's requirements, and

b) Home office costs, which include engineering, purchasing, drafting and project management. Home office costs were estimated on a factored basis.

A contingency has been applied to each estimate commensurate with good industry practice for a budget estimate. The contingency ranges from ten to twenty percent depending on the definition of engineering and accuracy of material pricing.

All estimates are based on instant execution (No escalation has been applied). Labor is based on a straight time normal work week. It has been assumed that all construction work can proceed with continuity and without interruption or delay due to plant operation interference. It is anticipated that plant shutdowns of sufficient duration will be available, when necessary.

No provision is made for import duties or taxes, as these items require detailed information which is normally not available until the project (or ECO) execution plan is developed.

All estimates for engineering assume execution by local Egyptian engineering contractors, with engineering supervision and/or assistance from an international contractor's staff. This assistance will involve local supervision on all projects, and a "front end" engineering package as a technical basis, on major projects.

3.6 Energy Conservation Opportunities (ECO's)

General

The audit, as it proceeds from concept to conclusion, brings many opportunities for plant personnel and the audit team to work together. At the Cairo Dyeing and Finishing Company, several such opportunities arose.

Typical of these were discussions on the adjustment of the burners on combustion devices, such as the oil boilers, during their efficiency measurement. The fired equipment specialists of the audit team, with their portable instruments, used for the audit, assisted the plant personnel to adjust the oil boilers, such that an immediate improvement in combustion efficiency was experienced.

Additionally, during a failure of the main plant boiler, the Foster Wheeler Boiler Expert was able to enter the boiler itself, and to assist the plant personnel in determining the proper repair to be made.

3.6.1 Summary List

A) No Cost/Low Cost

Under the category of no cost/low cost ECO's, are items requiring better maintenance, better operations and improved scheduling. In developing a list of these items, attention was paid to leaks of steam, air, condensate and water, poor combustion efficiency of various fired devices, poor insulation of hot or very cold (refrigerated) lines or equipment, operating procedures, instrumentation, etc. Given below is a comprehensive summary list of the no cost/low cost items identified during the preaudit activity which were further studied and evaluated during the audit.

It should be noted that upon completion of the investment estimation activity of the audit it became apparent that some of the ECO's originally identified as no cost/low cost were in reality investment items instead. Because of this an investment cost of 25,000 LE or below was established as the criterian for which items included in Table 1.1 of Section 2 are characterized as no cost/low cost.

3.6.1 Summary List (continued)

No Cost/Low Cost Items:

1. Change of procedures and/or shift starting times to eliminate the need to vent steam to the atmosphere periodically between shifts.

2. Repair steam, air, water and condensate leaks from valves, lines, flanges, etc. in the Shobra Factory and the Fiber Factory.

3. Test, repair/replace steam traps.

4. Institute a permanent program for steam trap testing.

5. Add new or repair existing insulation on steam lines and any hot items of equipment.

6. Study the effect of insulation on heat loss from pipes.

7. Shut down water and steam usage during power failures.

8. Check combustion efficiency of oil fired steam boilers and six oil fired oil boilers. (excess air, burners, etc.)

9. Check feasibility or reusing dye for more than one batch.

10. Add new instrumentation and fix existing instrumentation, as required.

11. Consider the use of "bump and run"* on various dye using equipment.

---

* "Bump and run" is an operating procedure whereby a dye bath is intermittently heated by steam. Steam is admitted to the dye bath and the drains closed. The steam is shutoff when the desired temperature is reached. After a period of time when the temperature in the dye bath drops, the procedure is repeated.

12. Install automatic control or just a permanent temperature indicator visible from existing steam valve in all applications which use steam to achieve a specified temperature level.

13. Add measuring and control instrumentation on steam and fuel systems.

14. Consider possible operation of the boiler at a much lower pressure than 20 bar, as determined by bottlenecks on capacity to handle greater steam volume at a lower pressure.

15. Investigate possibility of reducing/controlling by temperature the quantity of steam used for the deaerator.

16. Consider the use of low pressure, rather than high pressure, steam for the deaerator. Perhaps this can be provided by a condensate recovery flash drum.

17. Investigate the possibility of putting covers on open J boxes and any other items with large emissions to the atmosphere.

18. Reschedule operation to reduce peak demand of electricity.

19. Form a committee responsible for the planning and implementation of energy conservation measures. This committee must be chaired by an energy conservation coordinator.

20. Use publicity, memos, newsletters, etc. to make all employees aware of the importance of energy conservation and its implementation.

21. Use of a less expensive heat transfer medium than the thermomobile #605 oil currently being used.

22. Investigate options to reduce heat consumption necessary to maintain mazout in a low viscosity condition.

3.6 Energy Conservation Opportunities ECO'S (Cont'd)

3.6.1 Summary List (cont'd)

B) Investment

Under the category of investment ECO'S are items for which the investment made must be paid for, as quickly as possible, by the savings in energy cost resulting from the implementation of the ECO. Given below is a comprehensive summary list of the potential capital investment items identified during the preaudit activity. Each of these items have been studied further during the audit in order to determine the potential energy savings and estimated investment. This has allowed for each potential item to be categorized and listed in terms of attractiveness and resulting priority as shown in Section 2.1.

It should be noted that, upon completion of the investment estimation activity of the audit, it became apparent that some of the ECOs originally identified as investment items were in reality no cost/low cost items instead. Because of this an investment cost of 25,000 LE or greater was established as the criterian for which items included in Table 1.1 of Section 2 are characterized as investment items.

Items Requiring A Capital Investment:

1. Modification of existing Thermasol to use steam or hot oil instead of electricity, if feasible.

2. Installation of a condensate recovery system to include all the big procedures of condensate and the smaller products where feasible. There is an existing condensate recovery drum which is currently not in use. May also require the cleanup of oil currently in some condensate.

3. Recovery of heat from the stacks of the existing six oil boilers.

4. Installation of capacitors is needed to improve the power factor which is currently 0.7.

5. Consider the use of a demand controller to reduce peak demand of electricity.

6. Consider the use of heat pipes to recover heat from the hot air leaving the dryer stacks to preheat cold incoming air.

7. Investigate heat recovery from hot wash water to cold wash water.

8. Investigate the possible elimination of the only two current users of high pressure steam. Both these users are small. Specifically, they are:

   a) Replacing the existing steam jet ejector on the last stage of the sodium hydroxide recovery system with an electrically driven vacuum pump.

b) Investigate the possibility of using lower pressure steam for Thermasol service.

9. Consider the following possibilities for dealing with the problem of repeated power failures:

   a. Install emergency diesel generator.
   b. Obtain power from two rather than one power stations.

10. a) Generate electricity by letting down the high pressure steam through a power recovery turbine instead of a pressure regulating valve.

    b) Install a true cogeneration system to produce total electricity and steam required.

11. Investigate recovery systems for the treated hot and cold wash water.

3.6.2 Detailed ECO Presentation

For each of the no cost/low cost and each of the investment ECO's included in the "Summary List" given above in Section 3.6.1, a detailed ECO description and evaluation has been developed. All of this information is now presented in the pages which follow.

Note that each ECO is given an identification number, as CD-A-1 which ties it directly to the list of ECOs, as shown in Section 3.6.1. Additionally, each ECO is written in such a way that it can be "self standing," and contains, at the bottom of each of its pages, an identifier and page number for that ECO alone. This step is taken so that the full text which defines that ECO, including its technical description, investment cost, savings, and payback can be removed for easy use elsewhere in project definition documents, financial discussions, and the like.

ELIMINATE VENTING OF STEAM BETWEEN SHIFTS	Annual Savings LE:	200,000
	Investment Cost LE:	0
	Payout, Years:	Immediate

ECO #CD-A-1

1.0 PURPOSE

The purpose of this ECO is to eliminate the loss in energy which currently results from the periodic venting of steam to the atmosphere, during the changing of shifts, both for the Shobra and the Fiber plants.

2.0 PROCESS DESCRIPTION

Both the Shobra and Fiber plants currently work six days a week (closed Fridays). During each day of operation there are three shifts. The morning shift works from 7:00 am to 3:00 pm. The afternoon shift works from 3:00 pm to 11:00 pm and the night shift from 11:00 pm to 7:00 am.

During the changing of each of these three shifts, there is a period lasting from 60 to 90 minutes in which processing stops and steam from the main boiler is vented to atmosphere.

It is now being proposed, through this ECO, that processing not stop when the shifts are being changed, but that it instead continue without interruption. This can be accomplished by having the Shobra and Fiber plants start their shifts one hour apart and, at the same time, having a minimum number of workers on each of the three shifts scheduled, on a rotational basis to work 60 to 90 minutes of overtime during the shift change, to result in a shift overlap.

Those who work overtime can be compensated either by increased pay, increased vacation or other incentives, whichever method appears most appropriate to plant management.

3.0 EQUIPMENT LIST/SIZE

No new equipment required for this ECO.

4.0 PREDICTED ENERGY SAVINGS

Based on 295 days of operation per year and an estimated average of 3 1/2 hours of steam venting each day, the predicted energy savings corresponds to 20,650 tons of steam per year. The value of steam for evaluation is based on the worldwide cost of 14.636 LE/ton, thus resulting in an annual savings in steam cost of LE 302,000.

If we assume that management is willing to use one-third of these savings to compensate the workers for overtime, then LE 340 are available each operating day to pay for overtime and LE 200,000 is the total predicted annual savings.

5.0 INVESTMENT AND ASSOCIATED ECONOMIC EVALUATION

No investment is required for this ECO. As shown in 4.0 above if one-third of the annual savings is used to compensate the workers for overtime, the total predicted annual savings would be LE 200,000.

6.0 CONCLUSIONS

Based upon the analysis shown above, if steam venting

between shifts is eliminated, the total predicted annual savings, after reimbursement for overtime, would be LE 200,000.

7.0 RECOMMENDATION

This ECO should be implemented without any delay.

REPAIR OF STEAM, ETC
LEAKS FROM PIPING

Annual Savings LE : 368,00
Investment Cost LE: 13,60
Payout, YRS : 0.04
(15 days)

ECO #CD-A-2

1.0 PURPOSE

The purpose of this ECO is to repair steam, air, water and condensate leaks from valves, lines, flanges, etc. to minimize energy losses.

2.0 PROCESS DESCRIPTION

A detailed survey was made of the steam leaks in both plants. All leaks were tagged and identified during the preaudit. The size of each leak was estimated as either small, medium, large or extra large. An estimated quantity of steam was assigned to each size of leak based upon published figures and experience for the various hole sizes that were estimated. The steam leaks and the average size for each are very large in the Shobra plant while in the Fiber Plant there are much fewer leaks.

Air, water, fuel and condensate leaks were noted but not quantitatively estimated, as the quantity of each was small as compared to the steam leaks. Several of the major leaks in the Shobra plant in this category are as follows:

1. Singeing machine, SG-2 - Hot water is spilling to the floor from the gap between the rollers due to lack of a spring and balancing weight on top roller.

2. Washing machine, W-1 - Hot water is leaking through cracks in the tank.

3. Singeing machine SG-1 - The tank for excess fuel should be connected to the underground fuel tank to prevent overflow which occurs once or twice per week.

4. Numerous condensate leaks were observed around the drier following the dye jiggers, both steamers, the printing machines, the driers DR-1/2/3 and saturator SAT-3.

3.0 NUMBER OF STEAM LEAKS

A total of 118 steam leaks were tagged with 72 being in the Shobra plant, 26 in the Fiber plant and 20 in the boiler plant, including outdoor steam piping. The source of leaks are distributed as follows:

	Shobra	Fiber	Boiler	Total
Valves	26	18	14	58
Pipe lines	33	2	5	40
Flanges	9	4	1	14
Equipment	4	2	-	6
	72	26	20	118

Leaks from pipelines are largely at fittings in the piping system. Note also that steam trap leaks are not included here as they are covered separately under ECO CD-A-3.

The leaks are further categorized by size as follows below in 4.0.

4.0 PREDICTED ENERGY SAVINGS

It is estimated that the following quantity of steam is leaking per hour from all of the above leaks:

Type	Estimated Leakage Per Leak-Kg/HR	Total Leakage Kg/HR			
		Shobra	Fiber	Boiler	Total
Small	9	210	65	30	305
Medium	18	435	180	90	705
Large	34	275	170	205	650
Extra Large	68	1150	270	410	1830
Total		2070	685	735	3490

Cost of Energy Savings from repair of leaks:

Plant	Leakage Kg/HR	Steam Cost LE/ton	Annual Savings Worldwide-LE
Shobra	2070	14.636	219,000
Fiber	685	14.636	73,000
Boiler	735	14.636	75,600
Total	3490		LE 367,600

5.0 INVESTMENT AND ASSOCIATED ECONOMIC EVALUATION

To repair the above described leaks the estimated cost of materials and labor is LE 13,600.

The payout on a worldwide basis is 0.04 years or 15 days.

6.0 CONCLUSIONS

For very little investment this ECO is extremely attractive with a payout period of 0.04 yrs.

7.0 RECOMMENDATION

This ECO should be initiated immediately.

TEST, REPAIR/REPLACE STEAM TRAPS

Annual Savings LE : 120,000
Investment Cost LE: 22,900
Payout YRS : 0.19 (69 days)

ECO #CD-A-3

1.0 PURPOSE

The purpose of this ECO is to test, repair and replace defective steam traps.

2.0 PROCESS DESCRIPTION

Twenty of the existing traps in the plants were tested to give an indication of the percentage of defective traps in the plants. This quantity represents approximately ten percent of the total of 200 traps in the two plants.

Various types of traps were checked by visual, sonic and temperature methods. Since some of the traps exhausted to atmosphere a visual check of these could be made. Where steam blow-thru was observed, the quantity of steam loss was estimated for the purposes of this ECO.

While a visual check of steam trap operation is the best method, it can only be accomplished if the discharge is to an open drain or if test valves to atmosphere are installed upstream and downstream of the trap. No test valves were observed in either of the two plants.

The next best method of testing is by use of a sonic listening device. The listening device gives

a fairly clear understanding of how the trap is operating. A normally operating inverted bucket trap can be heard as a definite burst of sound when the bucket sinks and opens the trap valve, thereby discharging condensate until entering steam floats the bucket and closes the valve. In the presence of extremely low loads the bucket can be heard as a continuous clattering sound. This is sometimes referred to as a "dribbling trap". This is still a normally operating steam trap with little, if any, steam loss. This could also be an indication of an oversized trap, therefore requiring a smaller or restrictive orifice. A definite cycle rate can be heard when a disc trap is operating normally as the disc is lifted off the inlet orifice allowing condensate to flow through the outlet passage, and then closes the orifice in the presence of steam. The normal operation sounds of a float and thermostatic trap are difficult to distinguish as it is a constant flow device with no cycle rate. By shutting off the inlet valve and letting condensate accumulate, and then releasing a large condensate load to the trap, the trap can be heard opening and then modulating down to a steady state flow. The thermostatic air vent in a float and thermostatic trap in many cases opens rather infrequently to release air, making its operational condition quite difficult to determine. A thermostatic steam trap has a cycle, but it is much more gentle in nature than the inverted bucket or disc trap. A subcooling thermostatic steam trap is similar in operation to the float trap. It may have either a bellows or a bimetalic spring as the actuation device, opening and closing the trap according to a set temperature differential.

The last but least satisfactory test method is by temperature measurement. A surface measurement can be made of the inlet and outlet of the trap. This is merely an indication of the corresponding saturation steam pressure upstream of the trap and the pressure of the condensate system downstream of the trap. In the case of a completely failed trap the inlet steam will be blowing through to the trap outlet with little pressure drop. Thus the steam temperature at the inlet and outlet will be much closer to the same reading than for a properly acting trap. In these plants no condensate recovery system is installed; however in some instances several traps are tied into a common drain to atmosphere. If one trap in this group is blowing steam to its discharge, this steam can cause the discharge temperature of other traps in the group to be higher than normally expected thus leading to an erroneous decision on the condition of the trap. Thus a check of trap performance by temperature must be carefully used.

3.0 EQUIPMENT LIST/SIZE

The following are the results of the trap survey

Location	Type	Number	Failed	Satisfactory
Steam mains	Disc	5	5	-
Shobra-New Dryer	Float	3	1	2
Shobra-Old Dryer	Disc	1	-	1
	Float	2	-	2
Fiber-Finishing Mach.	Inv. Bucket	5	-	5
Fiber-Dryer	Disc	4	-	4
		20	6	14

As noted six of the 20 traps tested were indicated to be defective. Generally, traps located on machines were in quite good condition while those on the steam mains required replacement.

Four of the traps on the steam mains both in the Shobra and Fiber plants were blowing thru discharging an extra large quantity of steam. The estimated total steam leakage quantity for these four traps using the methods defined in ECO CD-A-2 is approximately 365 Kg/hr.

It was noted on the old dryer in the Shobra plant many of the condensate discharges from the revolving cylinders were tied into a single trap. If more than one drain point is connected by a single trap, condensate and air from one or more of the cylinders may fail to reach the trap. Any difference in condensing rates will result in a difference in steam pressure drop. A pressure drop difference too small to register on a pressure gauge is enough to let steam from the higher pressure unit block the flow of air or condensate from the lower pressure cylinder. The net result is reduced heating, output and fuel waste.

4.0 PREDICTED ENERGY SAVINGS

Based on the results of the trap survey 6 out of 20 traps or 30 percent of the traps required replacement. Projecting this result to the 200 traps installed in the plant we would estimate that 60 traps would need replacement at this time.

As noted above four traps on the main steam lines were blowing thru an excessive amount of steam estimated to be 365 Kg/hr. For other traps mostly used

on equipment we estimate an average steam loss per trap of approximately 30 lb/hr. If this quantity is used for 56 traps and 365 Kg/hr for the four main steam traps the total steam loss is approximately 1135 Kg/hr

This steam loss is worth LE 120,000 based on worldwide price.

5.0 INVESTMENT AND ASSOCIATED ECONOMIC EVALUATION

	Kg of steam	Steam cost LE/ton	Annual Savings Worldwide LE
Estimated Steam Loss of Defective Traps			
Est. steam loss per Hour	1135		
Est. steam loss Annually	8,200,000	14.636	120,000
Number of Traps to be Replaced	60		
Est. average Cost to replace (380 LE per trap) including material and installation		22900	

The payout on a wordwide basis is 0.19 years or 69 days.

6.0 CONCLUSIONS

The testing, repair and replacement of steam traps has a payout of 69 days and is therefore a very attractive ECO.

7.0 RECOMMENDATION

This ECO should be implemented immediately.

INSTITUTE A PERMANENT PROGRAM FOR STEAM TRAP TESTING

Annual Savings LE : 60,000
Investment Cost LE: 17,000
Payout, YRS : 0.28
(102 days)

ECO #CD-A-4

1.0 PURPOSE

The purpose of this ECO is to institute a permanent program for steam trap testing in order to replace defective traps, as soon as practical.

2.0 PROCESS DESCRIPTION

Based on the results of testing of steam traps covered in ECO-A-3, it is evident that a permanent program should be started to test all steam traps. Much of the efforts to save steam in the plants can be wasted, if the steam traps are not working properly.

The program must be a permanent one and should be under the control of the plant energy coordinator and his comittee. At a very minimum each trap in the plant must be tested once per year; however, a more frequent period of testing is strongly recommended. It is preferable to test traps operating over 16 Bar weekly, those operation from 2 Bar to 16 Bar monthly, and lower pressure traps test at least once annually. A trap item number and permanent metal tag must be assigned to each trap and records maintained to indicate testing dates, results and trap replacement.

The benefits of a permanent steam trap testing program can be as follows:

1. Reduction in steam losses.

2. Life expectancy of a trap can be determined from plant records before repair or replacement is required.

3. The best trap for particular services can be determined by analysis of records of performance.

4. Cost figures are available to support how much a particular trap is costing.

5. Only 5 percent of the plant steam traps will require attention at one time, thus less maintenance is required.

3.0 EQUIPMENT LIST/SIZE

Not applicable.

4.0 PREDICTED ENERGY SAVINGS

From the steam trap survey covered by ECO A-3 it was noted that the estimated steam loss at this time from defective traps is 570 Kg/hr. It is reasonable to assume that this quantity of energy losses would occur on a yearly basis if trap were not replaced regularly. The savings in energy can be assumed to be at least half of this value, since all defective traps will not be discovered as soon as they begin leaking.

Therefore, energy savings that result from a permanent steam trap testing program is estimated to be as follows:

	Kg/hr steam	Steam cost LE/ton	Annual savings Worldwide LE
Per hour	570		
Per year	4,100,000	14.636	60,000

5.0 INVESTMENT AND ASSOCIATED ECONOMIC EVALUATION

Using an estimated total installed cost per trap of LE 380 and assuming that 30 traps or 15% of the total plant's traps are replaced each year the total annual cost to install new traps is LE 11400. In addition an initial cost of LE 500 must be allowed to tag the traps and LE 5,000 to purchase testing instruments. The total first year investment will then be LE 17,000.

The payout is 0.28 years or 102 days based on worldwide prices.

The above payout is based upon the plant personnel conducting the permanent trap survey program. Representatives of steam trap manufacturers will offer a service to survey steam traps in plants. However, this service costs approximately LE 8 to LE 10 per trap. Since the Cairo Dyeing and Finishing plant has only approximately 200 traps it is recommended that plant personnel conduct the survey and not the steam trap manufacturers representative.

6.0 CONCLUSIONS.

The initiation and carrying out of a permanent program to test, repair and replace steam traps has a payout period of 102 days. This is a very attractive ECO and is a continuing one, year after year.

7.0 RECOMMENDATION

This ECO should be initiated immediately and carried out continuously.

ADD NEW OR REPAIR EXISTING INSULATION

Annual Savings LE : 49,000
Investment Cost LE: 59,600
Payout YRS : 1.22

ECO #CD-A-5

The purpose of this ECO is to provide new insulation on piping and equipment in order to conserve energy by minimizing heat losses.

2.0 PROCESS DESCRIPTION

A detailed review was conducted during the preaudit to determine locations of hot piping that required new insulation to be installed. It was determined at that time that no new equipment insulation was required.

The basis of this ECO is to provide new insulation where none is currently installed on the piping and to replace existing insulation in those locations where this insulation is judged to be in bad condition and is visibly not effective for heat conservation.

The pipe sizes and length to be insulated were measured. The lengths include flanges and valves that are not presently insulated. The required insulation thicknesses were then determined by use of the "Heatalyzer" Economic Insulation Thickness computer program.

3.0 EQUIPMENT LIST/SIZE

The following tabulations list the insulation requirements by pipe size, length and service.

Shobra Plant

Steam Piping - Header Pressure - 8 Bar

Pipe Size - inch	Estimated length - meters
1	76
$1\frac{1}{2}$	12
2	104
3	85
4	91
6	3
8	61

Condensate Piping - Pressure - 1 Bar

3	34

NOTE: Condensate is to be insulated in anticipation of future recovery.

Fiber Plant

Steam Piping - Header Pressure - 4 Bar

Pipe Size - inch	Estimated length -meters
1	76
$1\frac{1}{2}$	21
2	18
3	76
4	9
6	64

Condensate Piping - Pressure - 1 Bar

Pipe Size - inch	Estimated length - meters
1	40
$1\frac{1}{2}$	15
2	3

Hot Oil

2	3

Boiler Plant

Steam piping	Header Pressure - 20 Bar
3	1
8	7
10	4
12	1

4.0 PREDICTED ENERGY SAVINGS

The "Heatalyzer Economic Thickness" computer program determines the heat saved in LE/ft. of pipe for various line sizes and at different operating fluid temperatures, when also calculating the economic insulation thickness. These heat savings are summarized as follows based on worldwide costs:

Shobra plant	LE	31,400
Fiber plant	LE	14,600
Boiler plant	LE	3,000
Total	LE	49,000

5.0 INVESTMENT AND ASSOCIATED ECONOMIC EVALUATION

The estimated total investment for applying the economic thickness of insulation to all piping listed above is LE 59600.

Based upon the above investment the payout period is 1.2 years based on worldwide prices.

6.0 CONCLUSIONS

Insulation should be applied to all bare lines in plants including those where insulation is in poor condition.

7.0 RECOMMENDATION

This ECO should be initiated immediately.

STUDY THE EFFECT OF INSULATION ON HEAT LOSS FROM PIPES

Annual Savings LE : 0
Investment Cost LE: 0
Payout, years : Immediate

ECO #CD-A-6

1.0 PURPOSE

The purpose of this ECO is to study the effects of insulation on heat loss in piping and develop a chart to be used by the plant for all future piping insulation applications.

2.0 PROCESS DESCRIPTION

A chart was developed using the Heatalizer Economic Thickness Insulation computer program which indicates the optimum insulation requirements for different line sizes at various temperature ranges. The chart covers a temperature range from 66°C through 318°C for line sizes 1 inch diameter through 12 inch diameter. Fiberglass insulation material is the basis for the chart.

The chart is to be used in the future by plant personnel to specify insulation thickness on new or reinsulated lines.

3.0 EQUIPMENT LIST/SIZE

The following chart was developed:

ECONOMIC THICKNESS OF INSULATION FOR PIPING

MATERIAL - FIBERGLASS

Insulation thickness in millimeters required up to temperature indicated

PIPE SIZE	FLUID TEMPERATURE °C						
	66	94	122	150	206	262	318
1	25	25	40	40	65	75	75
1.5	25	25	40	40	65	75	75
2	25	40	40	50	75	75	75
3	25	40	40	65	75	75	100
4	40	40	50	65	75	100	100
6	40	40	50	65	75	100	100
8	40	50	65	75	90	100	100
10	40	50	65	75	90	100	100
12	40	50	65	75	100	100	100

4.0 PREDICTED ENERGY SAVINGS

Not applicable to this ECO.

5.0 INVESTMENT AND ASSOCIATED ECONOMIC EVALUATION

Not applicable to this ECO.

6.0 CONCLUSIONS

Based upon the results of ECO #CD-A-5 which covered the addition of insulation to the existing lines in the plants it is concluded that the use of the Insulation Thickness chart should be followed by the plant when installing new hot piping insulation.

7.0 RECOMMENDATION

This ECO should be implemented by having the plant use the chart included in this ECO for all future piping insulation application.

SHUT DOWN WATER AND STEAM USAGE DURING POWER FAILURES	Annual Savings LE:	4,000
	Investment Cost LE:	0
	Payout, Years:	Immediate

ECO #CD-A-7

1.0 PURPOSE

The purpose of this ECO is to prevent the loss of energy which can occur if water and steam usage are not promptly stopped at the onset of a power failure.

2.0 PROCESS DESCRIPTION

Both the Shobra and Fiber plants have recently been plagued by repeated and frequently occuring power failures.

It has been the practice of the plant operators not to take any specific course of action when a power failure occurs, but simply to allow the plant to attempt to continue to operate. This results in continued flow of steam and water until such time as the system is totally drained due to the absence of any new feed water being electrically pumped into the system.

This results not only in a loss of the energy which for a period of time continues to enter the system, but also the energy originally contained in the various hot liquids and vapors which are permitted to continue to leave the system.

It is proposed, through this ECO, that specific procedures be adopted that would require that the plant operators take immediate preventative action at the onset of a power failure to stop all new steam and

water from entering the system and simultaneously to prevent all energy already contained within the system from needlessly draining out of the system.

The system will then remain in a passive state, with no new energy entering or contained energy leaving, until such time as electric power is restored.

3.0 EQUIPMENT LIST/SIZE

No new equipment required.

4.0 PREDICTED ENERGY SAVINGS

During the period in which OEP and Foster Wheeler carried out the preaudit and audit at the Cairo Dyeing and Finishing Company, power failures of various duration were experienced almost every day. If we make a very conservative estimate that a power failure occurs only once every 5 days and that when it occurs the energy lost each time is equivalent to the cost of 15 minutes of steam production, then this loss, on an annual basis, based on the worldwide cost, is LE 4,300.

The implementation of written procedures by the plant and the training of plant operators to take action to prevent the loss will produce a predicted annual savings, following minor expenses associated with the training of the operators, estimated at LE 4,000.

5.0 INVESTMENT AND ASSOCIATED ECONOMIC EVALUATION

No investment is required for this ECO.

6.0 CONCLUSIONS

It would be beneficial to develop standby procedures and to train the plant operators to

take action to prevent evergy losses during a power failure, since doing so would result in a conservatively estimated annual savings of LE 4,000.

7.0 RECOMMENDATION

This ECO should be implemented, as soon as possible.

IMPROVING COMBUSTION EFFICIENCY OF STEAM BOILERS AND OIL BOILERS	Annual Savings LE:	40,600
	Investment Cost LE:	4,200
	Payout, Years:	0.10 (37 days)

ECO #CD-A-8

1.0 PURPOSE

The purpose of this ECO is to improve the combustion in the two steam boilers and the four identical oil boilers by decreasing the oxygen content in the flue gas.

2.0 PROCESS DESCRIPTION

2.1 Steam Boilers

The boiler load is automatically adjusted by monitoring the steam pressure. Measurements taken during the audit indicate that the cycling of the boiler is so large that the boiler draft pressure varies from 100mm H_2O up to 250mm H_2O. The measured excess air at high boiler load was equivalent to 4.2 percent oxygen which is more than adequate. At lower boiler loads the measured excess air was equivalent to 9 percent oxygen which is too high. In addition, the measured stack temperature varied between 174°C to 196°C. Based on these measurements, the calculated efficiency at high boiler load is 86 percent and the calculated efficiency at low boiler load is 83.5 percent.

By additional regulation of excess air the oxygen in the flue gas should be maintained at 3 percent. The calculated efficiency is 87 percent based on this quantity of excess air. To obtain this

additional efficiency, all presently non-functioning instruments should be repaired and calibrated.

2.2 Oil Boilers

The four oil boilers are currently operating intermittently to heat oil. All are operated with too high a quantity of excess air. Measurements were taken on oil boiler No. 1 which indicated the following gas composition in the stack: 5.8 percent O_2, 11.5 percent CO_2 and 0.4 percent CO. The calculated efficiency on this basis is 78 percent. This low value of efficiency was due to the carbon monoxide that was detected. Further, the smoke test indicated unacceptable soot formation. Based on this, cleaning of the burner tip was requested and immediately implemented. After cleaning, the measurements taken indicated 7.5 percent O_2, 10.6 percent CO_2 and no carbon monoxide. The calculated efficiency on this basis was 80.5 percent.

Measurements were also taken on oil boiler No. 2 which indicated 3.0 percent excess air and 14.5 percent CO_2. The calculated efficiency on this basis is nearly 82 percent.

By cleaning the burner tips frequently and providing a stack thermometer and portable oxygen analyzer, it is estimated that the boilers could be operated with 2 percent excess air. The calculated efficiency on this basis is 82.5 percent.

3.0 EQUIPMENT LIST/SIZE

3.1 Steam Boilers

No new equipment is required, only some repair of existing instruments and calibration.

3.2 Oil Boilers

Provide a stack thermometer in each oil boiler and one portable oxygen analyzer.

4.0 PREDICTED ENERGY SAVINGS

4.1 Steam Boilers

By repairing and calibrating all instruments, the efficiency of the steam boiler can be improved by one percent when operating at full load and by 3.5 percent when operating at low load. Using the one percent efficiency improvement as a basis, approximately 118 tons/year of mazout will be saved. On the basis of worldwide prices, LE 28,500 will be saved annually.

4.2 Oil Boilers

By cleaning the burner tip on boiler #1, the efficiency of the boiler improved from 78% to 80.5%. If a stack thermometer and a portable O_2 analyzer were provided so that the boiler can be operated more efficiently, the efficiency could be further improved to 82.5 percent.

On boiler #2, the burner tip did not yet require cleaning and the calculated efficiency is 82 percent. By installing a stack thermometer and using a portable O_2 analyzer the efficiency could be

improved to 82.5 percent.

For the basis of predicting energy savings, assume that the efficiency of two boilers can be improved from 78 percent to 82.5 percent or 4.5 percent while the other two can be improved from 82 percent to 82.5 percent. Only two of the four oil boilers, one in the Shobra plant and one in the Fiber plant operate at one time.

The total amount of mazout saved per year for the four boilers is 50 metric tons. The annual savings based on worldwide prices is LE 12,100.

5.0 INVESTMENT AND ASSOCIATED ECONOMIC EVALUATION

The cost to furnish and install the stack thermometers and furnish the portable O_2 analyzer for the oil boilers and repair and calibrate the steam boiler instruments is LE 4200.

Based on a total savings of LE 40,600 from the steam boilers and oil boilers, the payout period based on worldwide prices is 0.10 years or 37 days.

6.0 CONCLUSIONS

The rapid payout makes this ECO very attractive.

7.0 RECOMMENDATIONS

This ECO should be implemented as soon as possible. Further energy savings on the oil boilers can then be made by implementation of ECO #CD-B-3.

CHECK THE FEASIBILITY OF REUSING DYE FOR MORE THAN ONE BATCH

ECO #CD-A-9

Annual Savings LE: not yet known
Investment Cost LE: "
Payout, YRS : "
NOTE: Pilot plant tests are required before proceeding any further.

1.0 PURPOSE

The purpose of this ECO is to check the feasibility of reusing dye for more than one batch in the various dyeing machines.

2.0 PROCESS DESCRIPTION

The reuse of dye is not currently practiced in both the Shobra and Fiber plants. In order to determine if it is feasible to reuse dye, a discussion was held with the manager of the plant's laboratory regarding the types of dyes that currently are in use. The following summarizes these discussions.

The plant dyes woven cotton and thread cotton in open dye jiggers using approximately fifty (50) percent direct dyes with the remaining 50% of the dyes being reactive, sulfur, vat and indigasol dyes. The closed dye jiggers are used for cotton dyeing only. Reactive indigasol and vat dyes are used. Polyester is dyed in the jet dyeing machines with dispersed dyes. Dispersed dyes are totally consumed, thus no dye is available for reuse.

Subsequent to the discussion with the plant the following questions were asked to Dr. Fred L. Cook, a well known international expert on dye reuse, of the School of Textile Engineering at Georgia Institute of Technology, Atlanta, Georgia 30032, U.S.A. regarding the feasilability of reusing the dyes

described above. The reply from Dr. Cook follows each question.

1. Have textile companies in the United States or elsewhere reused specifically any or all of the above dyes on the material described above?
   Dr. Cook advised that no textile plant anywhere has reused specifically these types of dyes on the material as described.

2. If the answer to question number 1 is yes; then:
   a) Who, where, when and how?
   b) What are the results?
   c) Any problems?
   d) Any additional equipment needed?

   This question is not applicable, based on Dr. Cook's reply to question 1.

3. If the answer to question number 1 is no; then:

   a) How do we know for sure that it will work?
   b) Are pilot plant tests required?

   Dr. Cook advised that the reuse of dyes will work with direct dyes based on pilot plant tests that have been done to confirm the reuse. The reuse of dyes will not work with reactive dyes, however. Pilot plant tests have not specifically been done using sulfur, vat or indigasol dyes, but Dr. Cook expects that these types of dyes could be reused on the materials in question.

Several papers on the subjecg of dyebath reuse are included in the APPENDIX.

During the discussions with the plant laboratory personnel, a question arose regarding the manufacturer of a machine that can remove water by suction that could be located before the finishing machine. This machine was shown at the recent fair in Milan. Dr. Cook advised that the manufacturer is Gaston County whose address is Box 308, Stanley, North Carolina, 28164, U.S.A. The person to contact at this company is Mr. Jesse Camp. His telephone number is (704) 827-6751.

3.0 EQUIPMENT LIST/SIZE

This section is not applicable.

4.0 PREDICTED ENERGY SAVINGS

It appears from Dr. Cook's answers to the questions outlined in section 2.0 above that energy savings are possible by reusing direct dyes and possibly by reusing sulfur, vat and indigasol dyes. The savings must be evaluated after pilot plant tests are run by the plant laboratory.

5.0 INVESTMENT AND ASSOCIATED ECONOMIC EVALUATION

Investment costs must be developed after the evaluation of the reuse of dyes by the plant laboratory.

6.0 CONCLUSION

Pilot plant testing by the Cairo Dyeing and Finishing Co. must be undertaken, before the decision is made to proceed with dye reuse.

7.0 RECOMMENDATION

It is recommended that the plant laboratory conduct

pilot plant tests on the reuse of direct dyes, as well as on the reuse of sulfur, vat and indigasol dyes. Further contact with Dr. Cook at Georgia Institute of Technology may be helpful.

IMPROVE/ADD/FIX
INSTRUMENTATION

Annual Savings LE: 78,200
Investment Cost LE: 228,600
Payout, Years: : 2.92

ECO #CD-A-10, 12 and 13

1.0 PURPOSE

The purpose of this ECO is to improve/add/fix instrumentation, as required, to help conserve energy and to properly monitor its consumption.

2.0 PROCESS DESCRIPTION

An in-depth study was made regarding the instrumentation requirements for the Shobra and Fiber factories. This study combined the overall requirements for instrumentation improvement, addition, and fixing originally outlined as ECO's CD-A-10, 12 and 13. In general, the instrumentation provided for the Fiber Factory is adequate and is in good working order, but the instrumentation provided for the Shobra Factory and for the various utility sections (fuel oil, raw and treated water and steam) is inadequate or non-existent and in many cases the existing instruments are not in working order. The adding and fixing of the instruments for the Shobra Factory and for the utility sections is described in the tabulations and sketches which follow.

3.0 EQUIPMENT LIST/SIZE

The equipment and material required is described in the tabulations and sketches on the following pages. The material of construction is carbon steel, except where it is specified differently.

4.0 PREDICTED ENERGY SAVINGS

If the adding and fixing of the instruments for the Shobra Factory and for the utility sections (as shown on the following tabulations and sketches) is implemented, the predicted energy savings, based on 7080 operating hours per year, will be as follows:

	Energy savings corresponding to	World price	Savings LE/year
Steam	5340 MT/year	14.636 LE/MT	78,200
		TOTAL	78,200

5.0 INVESTMENT AND ASSOCIATED ECONOMIC EVALUATION

The total investment cost to purchase and install the equipment (mainly the instruments and the associated piping) and materials described above is LE 228,600.

The payout on a worldwide basis is 2.92 years for an annual energy savings of LE 78,200.

6.0 CONCLUSIONS

This ECO has a payout of 2.92 years.
We strongly recommend that all the instruments shown on the following tabulations and sketches be added/repaired, not only to help conserve energy but to properly monitor its consumption.

7.0 RECOMMENDATION

This ECO should be implemented.

IMPROVE/ADD/FIX INSTRUMENTATION

Annual Savings LE: 78,200
Investment Cost LE: 228,600
Payout, Years: : 2.92

ECO #CD-A-10, 12 and 13

1.0 PURPOSE

The purpose of this ECO is to improve/add/fix instrumentation, as required, to help conserve energy and to properly monitor its consumption

2.0 PROCESS DESCRIPTION

An in-depth study was made regarding the instrumentation requirements for the Shobra and Fiber factories. This study combined the overall requirements for instrumentation improvement, addition, and fixing originally outlined as ECO's CD-A-10, 12 and 13. In general, the instrumentation provided for the Fiber Factory is adequate and is in good working order, but the instrumentation provided for the Shobra Factory and for the various utility sections (fuel oil, raw and treated water and steam) is inadequate or non-existent and in many cases the existing instruments are not in working order. The adding and fixing of the instruments for the Shobra Factory and for the utility sections is described in the tabulations and sketches which follow.

3.0 EQUIPMENT LIST/SIZE

The equipment and material required is described in the tabulations and sketches on the following pages. The material of construction is carbon steel, except where it is specified differently.

4.0 PREDICTED ENERGY SAVINGS

If the adding and fixing of the instruments for the Shobra Factory and for the utility sections (as shown on the following tabulations and sketches) is implemented, the predicted energy savings, based on 7080 operating hours per year, will be as follows:

	Energy savings corresponding to	World price	Savings LE/year
Steam	5340 MT/year	14.636 LE/MT	78,200
		TOTAL	78,200

5.0 INVESTMENT AND ASSOCIATED ECONOMIC EVALUATION

The total investment cost to purchase and install the equipment (mainly the instruments and the associated piping) and materials described above is LE 228,600.

The payout on a worldwide basis is 2.92 years for an annual energy savings of LE 78,200.

6.0 CONCLUSIONS

This ECO has a payout of 2.92 years.
We strongly recommend that all the instruments shown on the following tabulations and sketches be added/repaired, not only to help conserve energy but to properly monitor its consumption.

7.0 RECOMMENDATION

This ECO should be implemented.

ECO: CD-A-10/12/13
ADD/FIX INSTRUMENTATION
PLANT: SHOBRA FACTORY

Date: March 10, 1985
Surveyed by: P.N. Reddy

ITEM NO.	EQUIPMENT NAME	EXISTING INSTRUMENTS?	TYPE OF EXISTING INSTRUMENTS	DOES EXIST INSTRUMENT OPERATE?	IS IT VISIBLE FROM CONTROL VALUE?	LEAVE AS IS, REPAIR OR UPGRADE
SG-1	Singeing	Yes	Solinoid Valve on 1/2" Fuel Line to the Top Burner	No		Replace
		Yes	Two Regulators' On Electric Air Preheater.	Both Are Out of order		Replace Range 50-200°C (22 Volt Regulators. Regulated From 220 Volts & 50 HTZ)
		Yes	Two Thermometers On Preheated Air Line.	One is Broken And the other is missing		Replace (Range 0-200°C) 3/4" Fitting.
		No				Provide Temperature indicator on Bath visible from valve on steam line. Operating Range 70-100°C
		No				Provide a Flow Indicator on 1" Chemical Feed Line (Range 0-200 Liters/HR).
SG-2	Singeing	No				Provide a Temperature indicator on Bath visible from valve on Steam Line. (Operating Range 70-100°C).

ECO: CD-A-10/12/13

ADD/FIX INSTRUMENTATION

PLANT: SHOBRA FACTORY

Date: March 10, 1985.

Surveyed by: P.N. Reddy

ITEM NO.	EQUIPMENT NAME	EXISTING INSTRUMENTS?	TYPE OF EXISTING INSTRUMENTS	DOES EXIST INSTRUMENT OPERATE?	IS IT VISIBLE FROM CONTROL VALUE?	LEAVE AS IS, REPAIR OR UPGRADE
W-1	Washing Machine	Yes	Temperature Guge	No		Provide a temperature Indicating Controller On Washing Machine And 1" control valve on a New Steam Line. See Sketch 1 of 10 (Operating Range 70-100°C)
Sat-1	Saturator	Yes	Flow Indicator	No		Provide a new Flow Indicator on 3/4" Line for chemical addition. Flowrate Range 0-200 Liters/Hr. See sketch 1 of 10.
		No				Provide a Flow Indicator on a New 3/4" Line for Water Addition. Flowrate Range 0-2 M^3/ Hr. See Sketch 1 of 10
		No				Provide A 14" Range Level Controller on Saturator and A 3/4" Control valve on a New 3/4" water line See Sketch.1 of 10

ECO: CD-A-10/12/13
ADD/FIX INSTRUMENTATION
PLANT: Shobra Factory

Date: March 10, 1985.
Surveyed by: P.N. Reddy

ITEM NO.	EQUIPMENT NAME	EXISTING INSTRUMENTS?	TYPE OF EXISTING INSTRUMENTS	DOES EXIST INSTRUMENT OPERATE?	IS IT VISIBLE FROM CONTROL VALUE?	LEAVE AS IS, REPAIR OR UPGRADE
J-1	J Box		Temperature control	No (Only one temperature gauge is working)		Recommend to Upgrade Temperature Controller to An Automatic Temperature Controller with a new 2"Control valve located on 3" Steam Line. Operating Temp.=100°C Repair or Replace Hand Wheels of all three Gate valves. See Sketch 2of 10
		Note:	(The cost to upgrade the instrumentation is covered by ECO # CD-A-17)			
W-2	WASHING MACHINE	No				Provide a Temperature Indicating Controller on washing Machine and 1" Control valve on a new Steam Line. See sketch 1 of 10 (Operating Range 70-100°C)
Sat-2	SATURATOR	Yes	Flow Indicator	No		Provide a New Flow Indicator on 1" PVC pipe for chemical Addition. Flowrate Range 0-200 Liters/HR. See Sketch 1 of 10.

ECO: CD-A-10/12/13
ADD/FIX INSTRUMENTATION
PLANT: SHOBRA FACTORY

Date: March 10, 1985.
Surveyed by: P.N. Reddy

ITEM NO.	EQUIPMENT NAME	EXISTING INSTRUMENTS?	TYPE OF EXISTING INSTRUMENTS	DOES EXIST INSTRUMENT OPERATE?	IS IT VISIBLE FROM CONTROL VALUE?	LEAVE AS IS, REPAIR OR UPGRADE
SAT-2	SATURATOR	No				Provide a Flow Indicator on A New 3/4" Line For Water Addition. Flowrate Range 0-2 M^3/HR See Sketch 1 of 10
		No				Provide A 14" Range Level Controller on Saturator And A 3/4" Control valve on a New 3/4" Water Line. See Sketch 1 of 10
SAT-3	SATURATOR	No				At Present using A small Plastic Make-Shift Bucket to Add Chemicals. Every 1/2 hour Chemicals are prepared in the Bucket. Provide an overhead Bucket (with a working capacity of 1000 Liters) with a 0.25 HP Agitator. Impeller Diameter 12". Provide a Flow Indicator on 3/4" Line from the Bucket. Flowrate Range 0-300 Liters/HR. See Sketch 3 of 10 for Bucket Dimensions and Other Details. MATERIAL: S.S.

ECO: CD-A-10/12/13.

ADD/FIX INSTRUMENTATION

PLANT: SHOBRA FACTORY

Date: March 10, 1985.

Surveyed by: P.N. Reddy

ITEM NO.	EQUIPMENT NAME	EXISTING INSTRUMENTS?	TYPE OF EXISTING INSTRUMENTS	DOES EXIST INSTRUMENT OPERATE?	IS IT VISIBLE FROM CONTROL VALUE?	LEAVE AS IS, REPAIR OR UPGRADE
SAT-3	SATURATOR	No				Provide A Flow Indicator on A New 3/4" Line For Water Addition. Flow rate Range 0-2 M^3/HR. See Sketch 3 of 10.
		No				Provide A 14" Range Level controller on Saturator and A 3/4" Control valve on A New 3/4" Water Line. See Sketch 3 of 10
J-3	J Box	Temperature Control.				Recommend to upgrade Temperature controller to Automatic Temperature controller with A new 2" control valve located on 2" Steam line. Operating temperature = 80°C. Repair or Replace hand wheels of all three gate valves. See Sketch 2 of 10.

Note: (The cost to upgrade the instrumentation is covered by ECO # CD-A-17)

ECO: CD-A-10/12/13/

ADD/FIX INSTRUMENTATION

PLANT: SHOBRA FACTORY

Date: March 10, 1985

Surveyed by: P.N. Reddy

ITEM NO.	EQUIPMENT NAME	EXISTING INSTRUMENTS?	TYPE OF EXISTING INSTRUMENTS	DOES EXIST INSTRUMENT OPERATE?	IS IT VISIBLE FROM CONTROL VALUE?	LEAVE AS IS, REPAIR OR UPGRADE
W-4	WASHING MACHINE	No				Provide A Temperature Indicating Controller on washing Machine And 1" control valve on a New steam Line. See Sketch 1 of 10 (Operating Range 70-100°C)
WM-1	Water Mangle	Yes	Machine Speed Recorder	Does Not work		

ECO: CD-A- 10/12/13

ADD/FIX INSTRUMENTATION

PLANT: SHOBRA FACTORY

Date: March 10, 1985.

Surveyed by: P.N. Reddy,

ITEM NO.	EQUIPMENT NAME	EXISTING INSTRUMENTS?	TYPE OF EXISTING INSTRUMENT	DOES EXIST INSTRUMENT OPERATE?	IS IT VISIBLE FROM CONTROL VALUE?	LEAVE AS IS, REPAIR OR UPGRADE
DR-1	Drying Machine (New Machine)	No				Provide A Flow Indicator on 3" Steam Line Upstream of pressure control valve See Sketch 4 of 10.
DR-2 And DR-3	Drying Machines	No				For Each Dryer; Provide A Pressure Indicating controller And A 2" Control valve on 3" Steam Line See Sketch 4 of 10. For Each Dryer; Provide A flow Indicator In 3" Steam Line Upstream of Pressure control valve See sketch 4 of 10.

ECO: CD-A-10/12/13

ADD/FIX INSTRUMENTATION

PLANT: SHOBRA FACTORY

Date: March 10, 1985.

Surveyed by: P.N. Reddy

ITEM NO.	EQUIPMENT NAME	EXISTING INSTRUMENTS?	TYPE OF EXISTING INSTRUMENTS	DOES EXIST INSTRUMENT OPERATE?	IS IT VISIBLE FROM CONTROL VALUE?	LEAVE AS IS, REPAIR OR UPGRADE
DJ-1 Throgh 10	DYE JIGGERS (TOTAL 10 DYE JIGGERS)					For Each Dye Jigger, Provide A Temperature Indicating controller on the DYE JIGGER to Maintain 70-90°C in the Dye Bath. Provide A 1" control valve on 1" Steam Line. See Sketch 5 of 10.
	Drying (Downstream of Dye JIGGERS)					Provide A Pressure Indicating controller and A 2" control valve on Steam Line. Pressure Controller Range 3-5 BARS. See Sketch 6 of 10. Provide A Flow Indicator on 2" Steam Line. See Sketch 6 of 10.

ECO: CD-A-10/12/13

ADD/FIX INSTRUMENTATION

PLANT: SHOBRA FACTORY

Date: March 10, 1985.

Surveyed by: P.N. Reddy,

ITEM NO.	EQUIPMENT NAME	EXISTING INSTRUMENTS?	TYPE OF EXISTING INSTRUMENTS	DOES EXIST INSTRUMENT OPERATE?	IS IT VISIBLE FROM CONTROL VALUE?	LEAVE AS IS, REPAIR OR UPGRADE
	PRINTING MACHINE (TOTAL 3 PRINTING MACHINES)					For Each Printing Machine; Provide A Temperature Indicating Controller on the Dryer to Maintain 150°C In the Dryer. Provide A 2" control valve on 2" Steam Line. See Sketch 6 of 10.
STM-2	STEAMER					Repair the Pressure Regulator on 3" Steam Line for Energy conservation. See Sketch 7 Of 10.
FN-2	Finishing Machine					Provide A Total of Two Temperature Indicating controllers and Two 2" control valves. One controller for Ground Level Box And Another Controller for Upstairs Box. The 2" control valves will be located or two 2" Steam Subheaders. Operating Temperature in the Box = 130-160°C See Sketch 7 of 10.
						Provide A Flow Indicator on 4" Steam Line Feeding the Two 2" Subheaders. See sketch 7 of 10

ECO: CD-A-10/12/13

ADD/FIX INSTRUMENTATION

PLANT: SHOBRA FACTORY

Date: March 10, 1985

Surveyed by: P.N. Reddy

ITEM NO.	EQUIPMENT NAME	EXISTING INSTRUMENTS?	TYPE OF EXISTING INSTRUMENTS	DOES EXIST INSTRUMENT OPERATE?	IS IT VISIBLE FROM CONTROL VALUE?	LEAVE AS IS, REPAIR OR UPGRADE
FN-3	Finishing Machine					Provide A Total of Two Temperature Indicating Controllers And Two 2" Control valves. One controller to contr the Temperature In the First Half of the Box A Another to control the Temperature in the seco half. The 2" control valves will be located on two 2" Steam Subheaders. Operating Temperature in the Box = 130-160°C. See Sketch 8 of 10. Provide A Flow Indicator on 4" Steam Line Feeding the two 2" Subheaders. See Sketch 8 of 10.

ECO: CD-A-10/12/13

ADD/FIX INSTRUMENTATION

PLANT: Shobra and Fiber Factories

Date: March 10, 1985

Surveyed by: P.N. Reddy/ J. Slomka

ITEM NO.	EQUIPMENT NAME	EXISTING INSTRUMENTS?	TYPE OF EXISTING INSTRUMENTS	DOES EXIST INSTRUMENT OPERATE?	IS IT VISIBLE FROM CONTROL VALUE?	LEAVE AS IS, REPAIR OR UPGRADE
	Steam Boilers	No				Provide a flow indicator in fuel oil header. See sketch 9 of 10.
		Yes	Oxygen Analyser	No		Provide a portable oxygen analyser. See sketch 9 of 10.
	Shobra Factory Oil Boilers	No				Provide a flow indicator in fuel oil header. See sketch 9 of 10.
		No				For each boiler provide a temperature indicator to measure the stack temperature. Temperature range 0-700°F. See sketch 9 of 10.
	Fiber Factory Oil Boilers	No				Provide a flow indicator in fuel oil header. See sketch 9 of 10.
		No				For each boiler provide a temperature indicator to measure the stack temperature. Temperature range 0-700°F. See sketch 9 of 10.

ECO: CD-A-10/12/13

ADD/FIX INSTRUMENTATION

PLANT: Shobra and Fiber Factories

Date: March 10, 1985.

Surveyed by: P.N. Reddy

ITEM NO.	EQUIPMENT NAME	EXISTING INSTRUMENTS?	TYPE OF EXISTING INSTRUMENTS	DOES EXIST INSTRUMENT OPERATE?	IS IT VISIBLE FROM CONTROL VALUE?	LEAVE AS IS, REPAIR OR UPGRADE
	Utility Flow DIAGRAM	No				Provide New Flow Indicators on Raw Water, Soft Water, Demineralized water, Boiler Feed Water And Steam Lines As Shown On Sketch 10 of 10.

JOINT ENGINEERING GROUP
OEP / FWEC
FOR: CAIRO DYEING AND FINISHING CO.

REF.
DATE
PAGE 105
REV.

WASHING MACHINES W-1, W-2 AND W-4

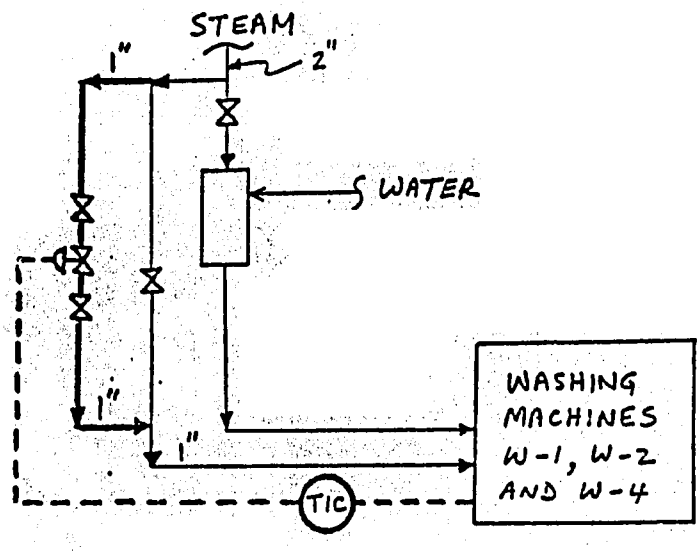

SATURATORS SAT-1 AND SAT-2

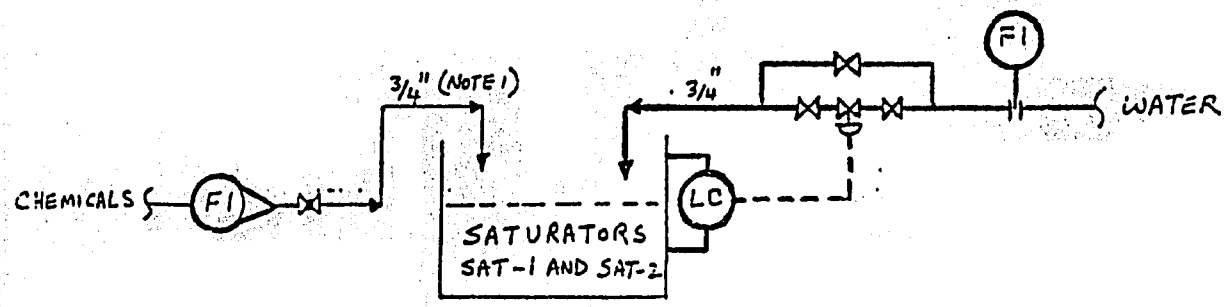

NOTE: FOR SAT-2 CHEMICAL ADDITION LINE SIZE IS 1" MADE OF PVC

PROCESS SKETCH
Improve/Add/Fix Instrumentation
ENERGY CONSERVATION OPPORTUNITY
ECO CD-A-10,12,13

PLANT SHOBRA FACTORY

LOCATION CAIRO. EGYPT

SKETCH 1 OF 10

LEGEND

EXISTING EQUIPMENT
NEW EQUIPMENT

JOINT ENGINEERING GROUP
OEP / FWEC
FOR: CAIRO DYEING AND FINISHING CO.

REF.
DATE
PAGE 106
REV.

J - BOX

TYPICAL FOR J-1 AND J-3

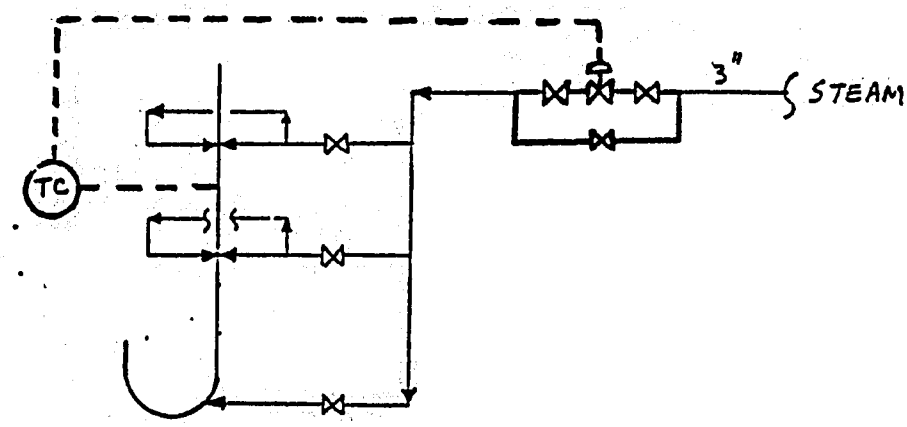

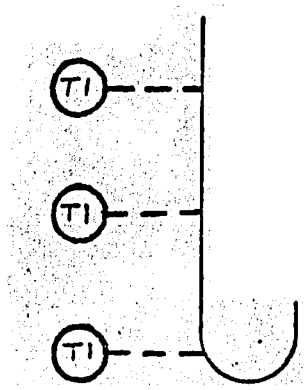

NOTE: THE COST TO UPGRADE THE INSTRUMENTATION OF J-BOXES IS COVERED BY ECO # CD-A-17.

LEGEND

EXISTING EQUIPMENT
NEW EQUIPMENT

PROCESS SKETCH
Improve/Add/Fix Instrumentation
ENERGY CONSERVATION OPPORTUNITY
ECO CD-A-10.12.13

PLANT SHOBRA FACTORY

LOCATION CAIRO. EGYPT

SKETCH 2 OF 10

JOINT ENGINEERING GROUP
OEP / FWEC
FOR: CAIRO DYEING AND FINISHING CO.

REF.
DATE
PAGE 107
REV.

SATURATOR SAT-3

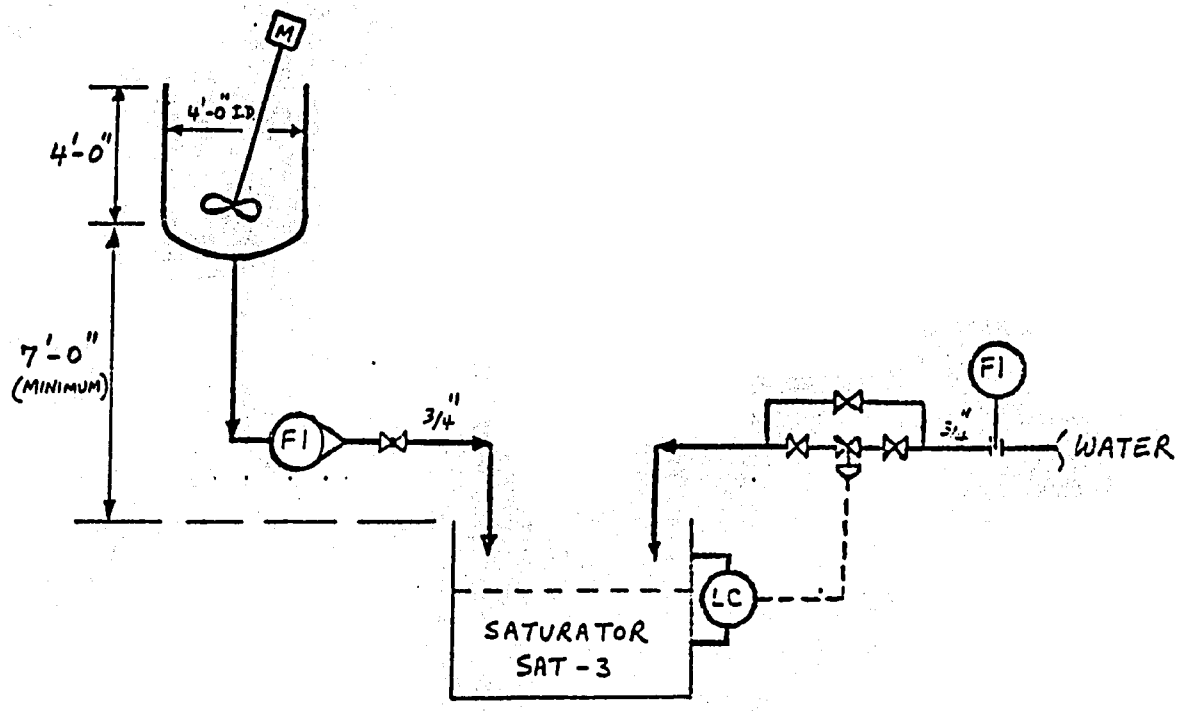

LEGEND

EXISTING EQUIPMENT
NEW EQUIPMENT

PROCESS SKETCH
Improve/Add/Fix Instrumentation
ENERGY CONSERVATION OPPORTUNITY
ECO CD-A-10, 12, 13

PLANT SHOBRA FACTORY

LOCATION CAIRO, EGYPT

SKETCH 3 OF 10

JOINT ENGINEERING GROUP
OEP / FWEC
FOR: CAIRO DYEING AND FINISHING CO.

REF.
DATE
PAGE 1.08
REV.

DRYING MACHINE DR-1
(NEW MACHINE)

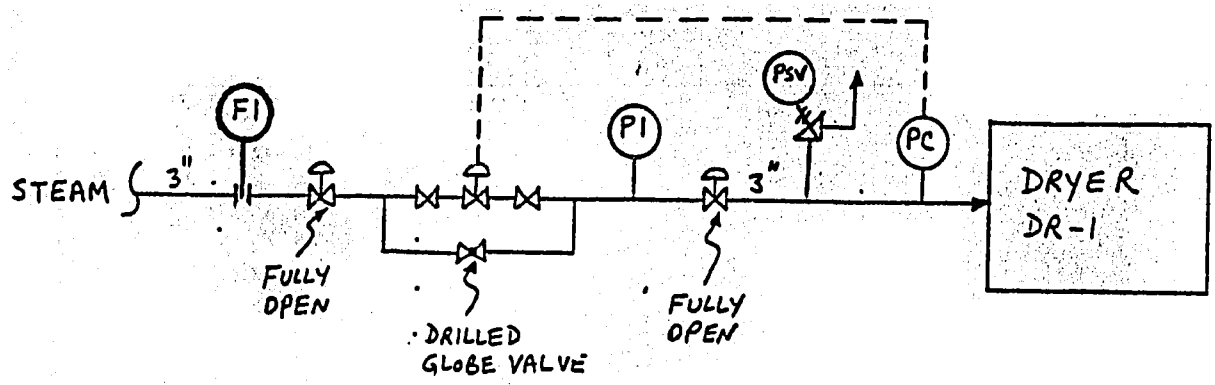

DRYING MACHINES DR-2 AND DR-3

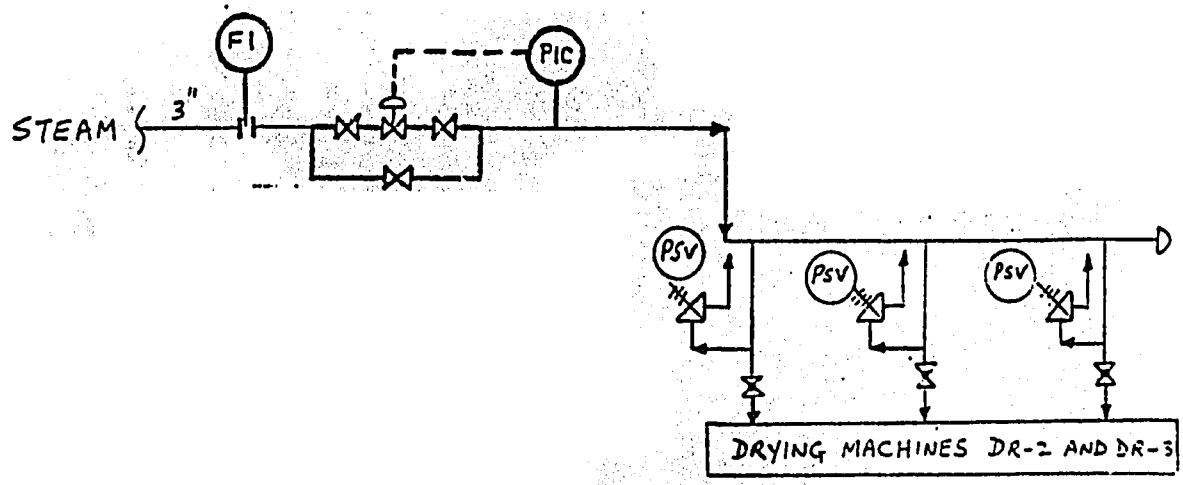

PROCESS SKETCH
Improve/Add/Fix Instrumentation
ENERGY CONSERVATION OPPORTUNITY
ECO CD-A-10,12,13

PLANT SHOBRA FACTORY

LOCATION CAIRO, EGYPT

SKETCH 4 OF 10

LEGEND

EXISTING EQUIPMENT
NEW EQUIPMENT

JOINT ENGINEERING GROUP
OEP / FWEC
FOR: CAIRO DYEING AND FINISHING CO.

REF.
DATE
PAGE 109
REV.

DYE JIGGERS DJ-1 THROUG 10

(TYPICAL FOR EACH DYE JIGGER)

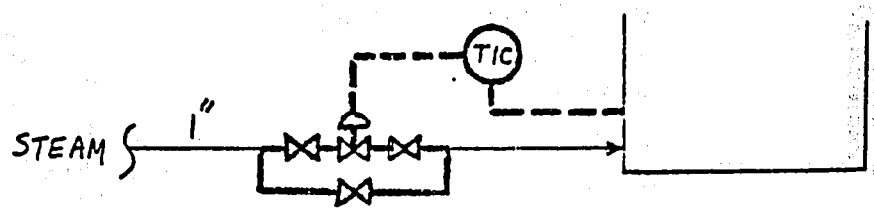

LEGEND

EXISTING EQUIPMENT
NEW EQUIPMENT

PROCESS SKETCH
Improve/Add/Fix Instrumentation
ENERGY CONSERVATION OPPORTUNIT
ECO CD-A-10, 12, 13

PLANT SHOBRA FACTORY

LOCATION CAIRO, EGYPT

SKETCH 5 OF 10

JOINT ENGINEERING GROUP
OEP / FNEC
FOR: CAIRO DYEING AND FINISHING CO.

REF.
DATE
PAGE 110
REV.

DRYING (DOWNSTREAM OF DYE JIGGERS)

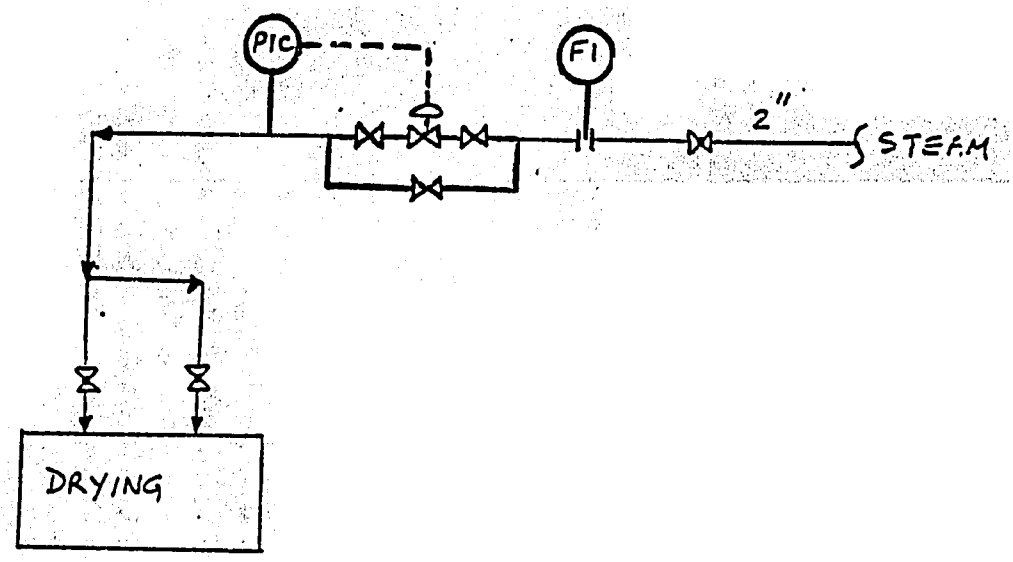

PRINTING MACHINES
(TYPICAL FOR EACH MACHINE)

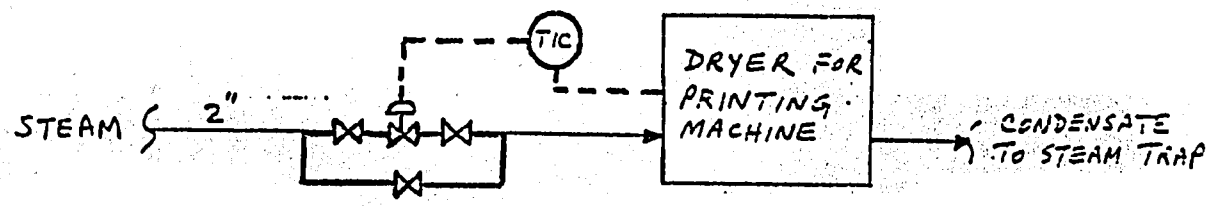

LEGEND

EXISTING EQUIPMENT
NEW EQUIPMENT

PROCESS SKETCH
Improve/Add/Fix Instrumentation
ENERGY CONSERVATION OPPORTUNITY
ECO CD-A-10,12,13

PLANT SHOBRA FACTORY

LOCATION CAIRO, EGYPT

SKETCH 6 OF 10

JOINT ENGINEERING GROUP
OEP / FWEC
FOR: CAIRO DYEING AND FINISHING CO.

REF.
DATE
PAGE 111
REV.

STEAMER STM-2
(OLD MACHINE)

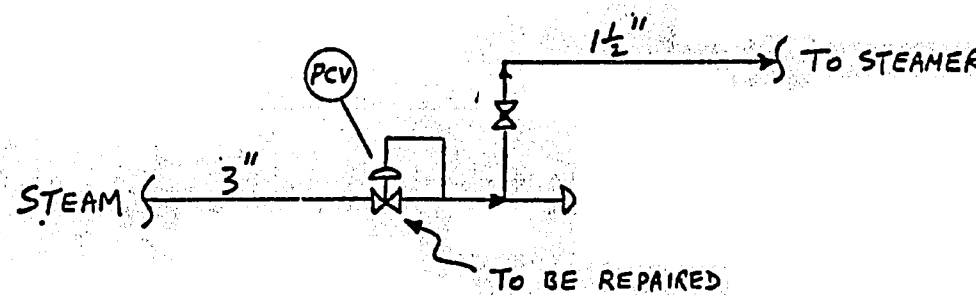

FINISHING MACHINE FN-2

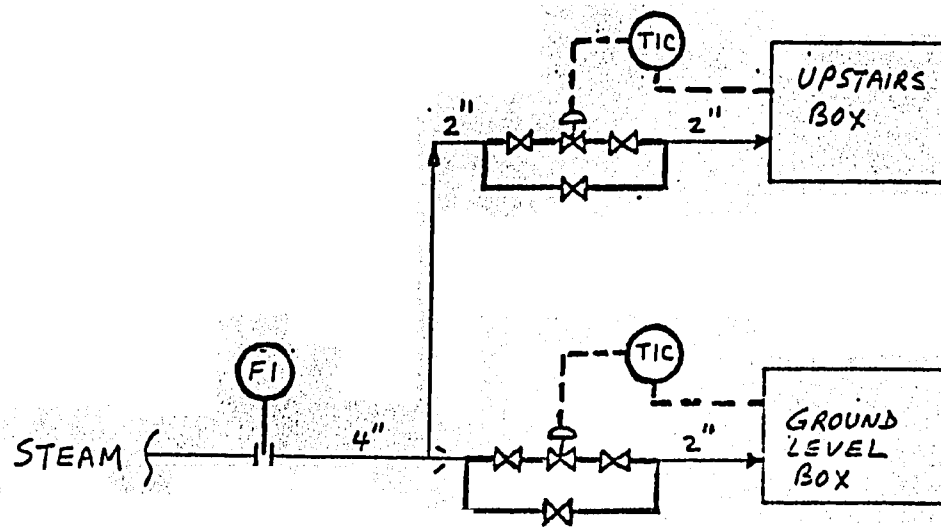

LEGEND

EXISTING EQUIPMENT
NEW EQUIPMENT

PROCESS SKETCH
Improve/Add/Fix Instrumentation
ENERGY CONSERVATION OPPORTUNITY:
ECO CD-A-10,12,13

PLANT SHOBRA FACTORY
LOCATION CAIRO, EGYPT

SKETCH 7 OF 10

JOINT ENGINEERING GROUP
OEP / FWEC
FOR: CAIRO DYEING AND FINISHING CO.

REF.
DATE
PAGE 112
REV.

FINISHING MACHINE FN-3

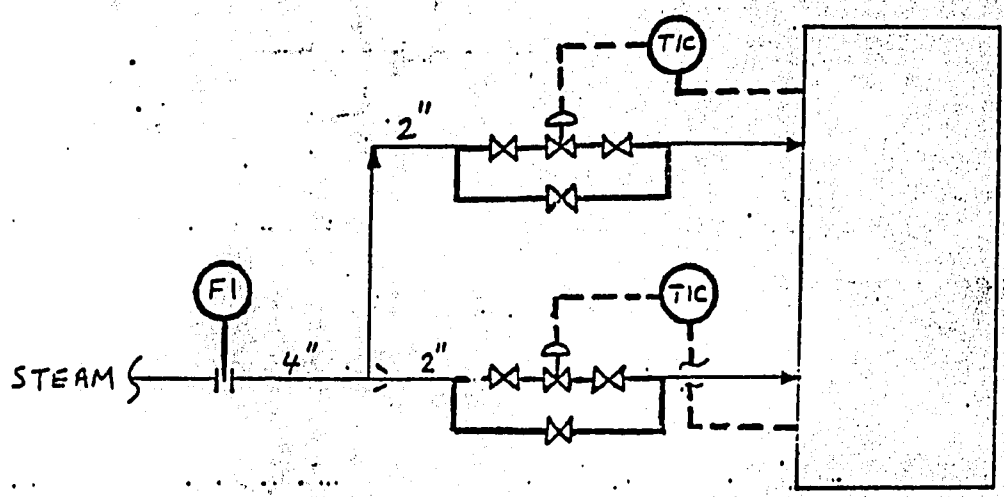

PROCESS SKETCH
Improve/Add/Fix Instrumentation
ENERGY CONSERVATION OPPORTUNITY
ECO CD-A-10, 12, 13

PLANT SHOBRA FACTORY

LOCATION CAIRO, EGYPT

SKETCH 8 OF 10

LEGEND

EXISTING EQUIPMENT
NEW EQUIPMENT

FUEL OIL TO BOILERS

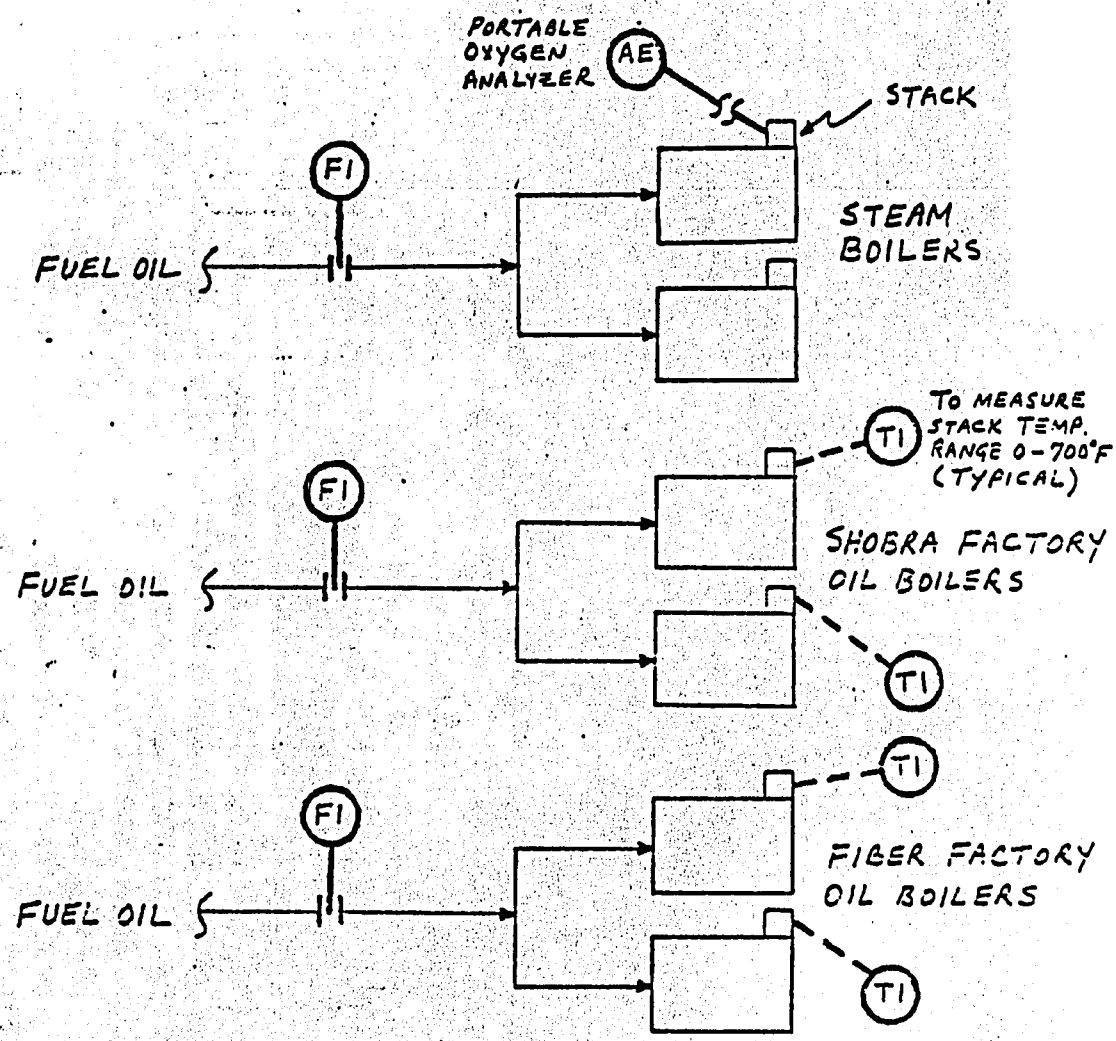

LEGEND

EXISTING EQUIPMENT
NEW EQUIPMENT

PROCESS SKETCH
Improve/Add/Fix Instrumentation
ENERGY CONSERVATION OPPORTUNITY:
ECO CD-A-10, 12, 13
PLANT SHOBRA AND FIBER FACTORIES
LOCATION CAIRO, EGYPT

SKETCH 9 OF 10

UTILITY FLOW DIAGRAM

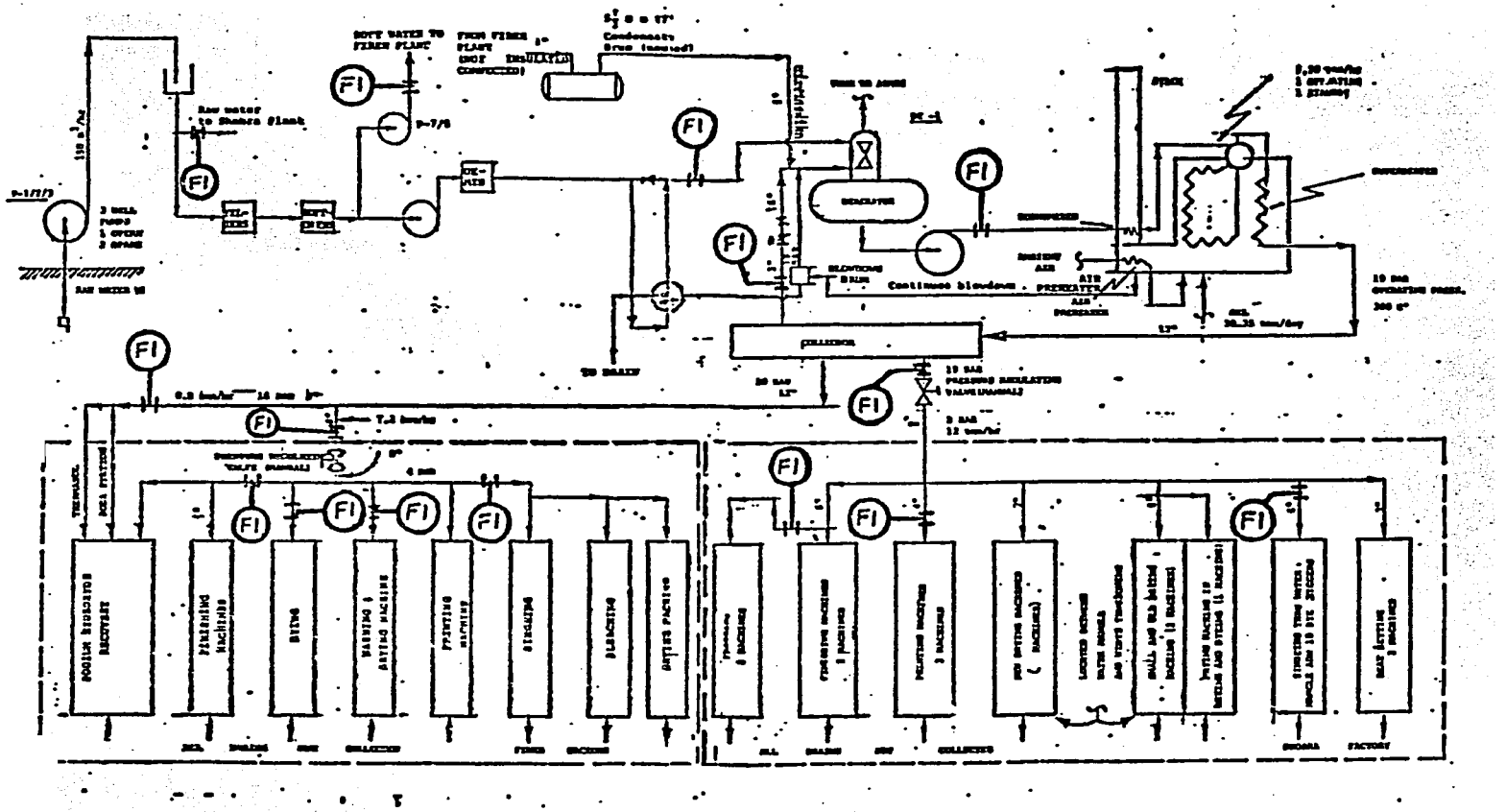

NOTE : ADDITIONAL FLOW INDICATORS REQUIRED ARE SHOWN ON THIS SKETCH.

LEGEND

- EXISTING EQUIPMENT
- NEW EQUIPMENT

PROCESS SKETCH
Improve/Add/Fix Instrumentation
ENERGY CONSERVATION OPPORTUNITY

ECO CD-A-10, 12, 13

PLANT SHOBRA AND FIBER FACTORIES

LOCATION CAIRO, EGYPT

SKETCH 10 OF 10

CONSIDER THE USE OF "BUMP AND RUN" ON DYE USING EQUIPMENT	Annual Savings LE : 5,500 Investment Cost LE: 19,500 Payout YRS : 3.54

ECO #CD-A-11

1.0 PURPOSE

The purpose of this ECO is to consider the use of a "bump and run" procedure for the various dye baths in order to reduce the use of steam.

2.0 PROCESS DESCRIPTION

Dyeing is performed in open and semi open dye jiggers in the Shobra plant and in closed dye jiggers and closed jet dyeing machines in the Fiber plant. All dye jiggers utilize a six hour batch operation in which steam, water and several chemicals are put into the dye baths. A temperature of approximately 70°C to 100°C is maintained. The temperature is checked at least twice per batch and the entering steam is adjusted accordingly.

This ECO proposes the use of a "bump and run" procedure for each six hour batch. This procedure involves heating the dyebath to the maximum temperature for dyeing and then turning the steam off and allowing the both temperature to drift downward. If the dyeing machine is well sealed, such as those in the Fiber plant the bath temperature will only drop a small amount. When the temperature reaches a minimum, the steam is admitted again for a short time to bring the bath temperature up to a maximum. The control of steam flow should be automatic. Plant laboratory personnel advised that cotton is dyed in the Fiber plant closed dye jiggers using reactive, indigasol and vat dyes. Polyester is dyed in the jet dyeing machines using dispersed dyes.

Dr. Fred Cook of the Georgia Institute of Technology, School of Textile Engineering, Atlanta, Georgia 30032, U.S.A. was questioned if the "bump and run" procedure could be successfully utilized with these dyes. He advised that pilot plant tests indicate that "bump and run" will work with direct dyes, but not with reactive dyes. Tests have not been run with other dyes such as sulfur, vat and indigasol dyes, but Dr. Cook believes that they could be used in the "bump and run" procedure.

Based on the above, the "bump and run" procedure could be tried in the Fiber plant dye jiggers and jet dyeing machines for some of the dyes used.

3.0 EQUIPMENT LIST/SIZE

Presently the nine (9) jet dyeing machines have controls on the steam inlet to automatically adjust the steam flow to maintain the bath temperature. The three (3) dye jiggers do not have automatic controls so these baths are operated by manually checking the temperature followed by manually adjusting the steam valve as required to adjust the bath temperature. To effectively utilize the "bump and run" procedure, a 1 inch automatic control valve should be added to the steam inlet line to each dye jigger. These valves in addition to those presently on the jet dyeing machines will then provide adjustable temperature control, that will admit steam at the minimum and maximum temperatures chosen for the "bump and run" cycle.

4.0 PREDICTED ENERGY SAVINGS

The tests that have been conducted in other plants to determine energy savings by the "bump and run" procedure indicate a 38 percent savings in steam to each dye bath.

We estimate that a total of 500 pounds of steam is used for each dye batch batch. If we assume that weekly 15 batches are processed per machine, the total steam consumption per year is 1800 metric tons. This excludes those batches run with reactive dyes in the dye jiggers. Conservatively, we estimate that the "bump and run" procedure conserves 25 percent of this steam or 450 metric tons. At a worldwide cost of LE 12.308 per metric ton the annual savings is LE 5,500.

5.0 INVESTMENT AND ASSOCIATED ECONOMIC EVALUATION

The investment cost to furnish and install the new control valves for the three dye jiggers is LE 19,500.

The payout is 3.54 years based on worldwide prices

6.0 CONCLUSIONS

It is recommended that tests be conducted to confirm that appreciable steam savings can be made by using the "bump and run" procedure. This procedure has been successfully used and steam savings obtained at other plants.

7.0 RECOMMENDATION

This ECO should be implemented, if plant tests confirm the predicted savings.

POSSIBLE OPERATION OF THE BOILERS AT A MUCH LOWER PRESSURE

Annual Savings LE: 17,400
Investment Cost LE: 0
Payout, Years: If done with CD-B-8 0.51

ECO #CD-A-14

1.0 PURPOSE

The purpose of this ECO is to consider the possibility of operating the boilers at a much lower pressure than the current 20 bar, as determined by any bottlenecks which may exist in the capacity of the current system to handle the greater steam volume which would result at the lower pressure.

2.0 PROCESS DESCRIPTION

The steam system is currently producing 20 bar steam. However, except for the very small users in or near the Fiber plant (see ECO #CD-B-8), which consume a total of only 0.8 tons/hour, the production of only 10 bar steam would be adequate from a standpoint of required operating pressure.

A brief engineering evaluation has determined that there are no apparent bottlenecks in the existing boiler system and that it would be possible to operate the system to produce 10 bar, rather than 20 bar, steam. At this lower pressure the main steam header will have a steam velocity of approximately 18 meters per second and a pressure drop of only 0.09 $Kg/cm^2/100$ meters, both of which are quite acceptable.

3.0 EQUIPMENT LIST/SIZE

None required for this ECO, however, the modification described in ECO #CD-B-8 must be implemented.

4.0 PPEDICTED ENERGY SAVINGS

The saturation pressure for 20 bar steam is 215°C and the saturation pressure for 10 bar steam is 184°C. The saturated steam enthalpy for 20 bar steam is 1,203 btu/lb and that for 10 bar steam is slightly lower at 1,195 btu/lb.

Over a period of one year this results in a predicted savings of approximately 72 metric tons of mazout or LE 17,400 at worldwide prices. In predicting this savings we do not take any credit towards the use of less electricity, since we do not propose to modify the existing boiler feed water pumps, or their controls, to produce a lower discharge pressure.

5.0 INVESTMENT AND ASSOCIATED ECONOMIC EVALUATION

In order to implement this ECO (ECO #CD-A-14) it is necessary to first implement the modifications described in ECO #CD-B-8 to eliminate the only two current users of high pressure steam. As described in ECO #CD-B-8, this requires an investment of LE 17,400. There is no additional investment beyond this to implement ECO #CD-A-14.

With a predicted savings of LE 17,400, the payout for operating the boilers at 10 bars, rather than 20 bars, would be 3 months.

6.0. CONCLUSIONS

If we implement both ECO #CD-A-14 and B-8, the overall payout would be 3 months

Only rough pricing was available from the thermosol machine vendor during the time frame of the audit. Prior to detail evaluation of this ECO a price confirmation is to be obtained.

7.0 RECOMMENDATIONS

Both ECO #CD-A-14 and B-8 should be implemented.

REDUCE STEAM REQUIRED FOR DEAERATOR

Annual Savings LE:	4,700
Investment Cost LE:	11,100
Payout, Years:	2.36

ECO #CD-A-15

1.0 PURPOSE

The purpose of this ECO is to add instrumentation, as required, to help conserve energy by controlling the quantity of steam used in the deaerator.

2.0 PROCESS DESCRIPTION

For present operation, about 95 percent of the steam required for the deaerator is supplied from the 19 Bar steam header by manually controlling the steam flow (only about 4 to 5% of the required steam is generated in the boiler blowdown drum). There is no instrumentation on the deaerator vent line to measure or control the flowrate of the vent stream. Only a small amount of steam is required to be vented, however, from visual inspection, it appears that much more than the required amount of steam is continuously vented to the atmosphere. We estimate the quantity of excess steam to be 45 Kg/hr. The adding of the instruments is shown in the sketch which follows.

3.0 EQUIPMENT LIST/SIZE

The instrumentation required is shown in the sketch which follows. The materials of construction is all carbon steel. A summary of this instrumentation is listed below:

a) Flow instruments
   -- Flow indicator on 1" vent line.

b) Temperature instruments
-- Temperature indicating controller
(to control the steam flowrate to deaerator).

c) Pressure instruments
-- Pressure indicating controller on 1" vent line.

d) Control valves
-- 1" control valve on 1" vent line.

4.0 PREDICTED ENERGY SAVINGS

If the instrumentation listed above is provided to control the steam flowrate to the deaerator, and to measure the amount of steam that is vented from the deaerator, the predicted energy savings (based on 7,080 operating hours per year) correspond to 321 tons of steam per year. If the value of steam based on the worldwide cost is 14.636 LE/ton, the annual savings in steam cost is LE 4,700.

5.0 INVESTMENT AND ASSOCIATED ECONOMIC EVALUATION

The total investment cost to purchase and install the equipment and materials described above is LE 11,100. The payout on a worldwide basis is 2.36 years for an energy savings of LE 4,700.

6.0 CONCLUSIONS

This ECO has a payout of 2.36 years. We recommend that the above mentioned instrumentation be provided for the deaerator to minimize steam consumption.

7.0 RECOMMENDATION

We recommend that this ECO be implemented

DEAERATOR

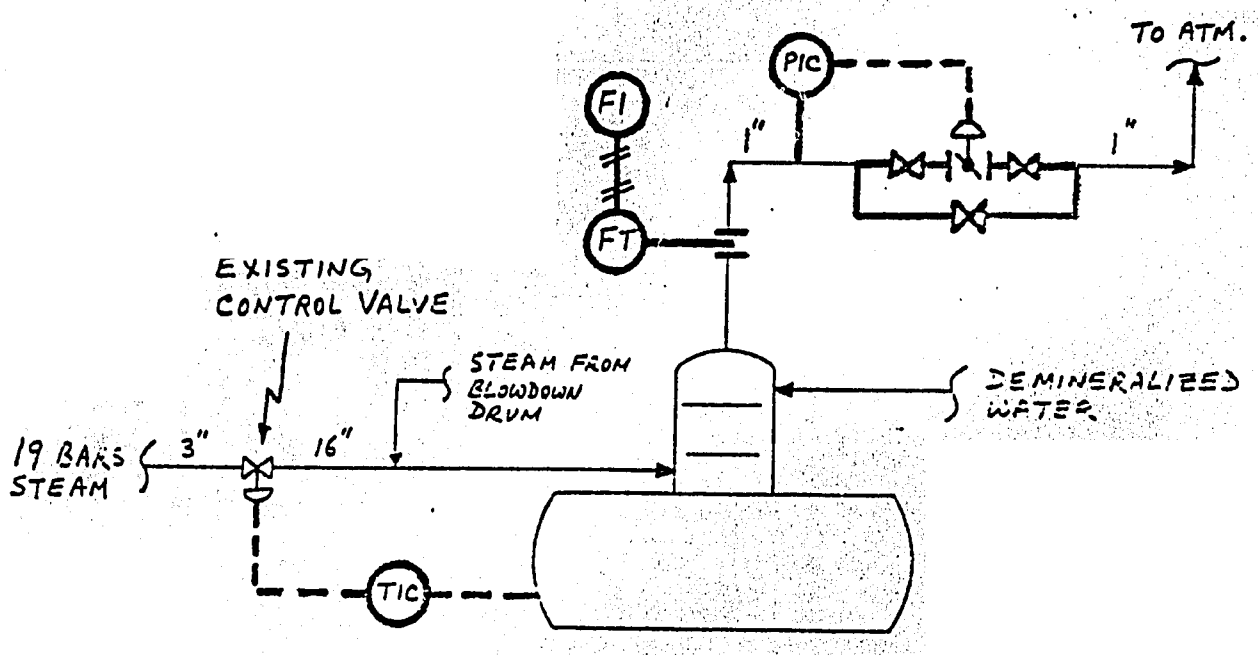

LEGEND

EXISTING EQUIPMENT
NEW EQUIPMENT

PROCESS SKETCH
Reduce Steam Required for Deaerator

ENERGY CONSERVATION OPPORTUNITY:

ECO CD-A-15

PLANT SHOBRA AND FIBER FACTORIES

LOCATION CAIRO, EGYPT

SKETCH 1 OF 1

USE LOW PRESSURE INSTEAD OF HIGH PRESSURE STEAM FOR DEAERATOR	Annual Savings LE:	None
	Investment Cost LE:	None
	Payout, Years:	Not Applicable

ECO #CD-A-16

1.0 PURPOSE

The purpose of this ECO is to consider using the low pressure steam, rather than the high pressure (19 bar) steam, for the deaerator to help conserve energy by minimizing the total requirement of the high pressure steam.

2.0 PROCESS DESCRIPTION

For the present operation, the 19 bar (275 psig) steam is let down to about 0.35 Kg/cm² to provide about 95 percent of the steam requirement of the deaerator. The remaining 4 to 5 percent of the required steam is generated in the boiler blowdown drum. The present operating scheme is shown on the sketch which follows. After evaluating the present steam system it was not possible to find a sufficient source of low pressure steam to implement this ECO.

It is feasible to use the low pressure steam for the deaerator, but it can not be implemented unless a decision is made to implement either ECO #CD-A-14 (Possible Operation of the Boilers at a Much Lower Pressure) or ECO #CD-B-2 (Condensate Collection System) first.

3.0 EQUIPMENT LIST/SIZE

No new equipment is required

4.0 PREDICTED ENERGY SAVINGS

Since there is no present source of low pressure steam, it is not possible to implement this ECO. If a decision is made to implement ECO #CD-A-14, the savings for ECO #CD-A-16 will be reflected in ECO #CD-A-14.

5.0 INVESTMENT AND ASSOCIATED ECONOMIC EVALUATION

Not applicable.

6.0 CONCLUSIONS

This ECO can not presently be implemented.

7.0 RECOMMENDATION

This ECO can not be carried out at this time

JOINT ENGINEERING GROUP
OEP / FWEC
FOR: CAIRO DYEING AND FINISHING CO.

REF.
DATE
PAGE 126.
REV.

DEAERATOR
(EXISTING SCHEME)

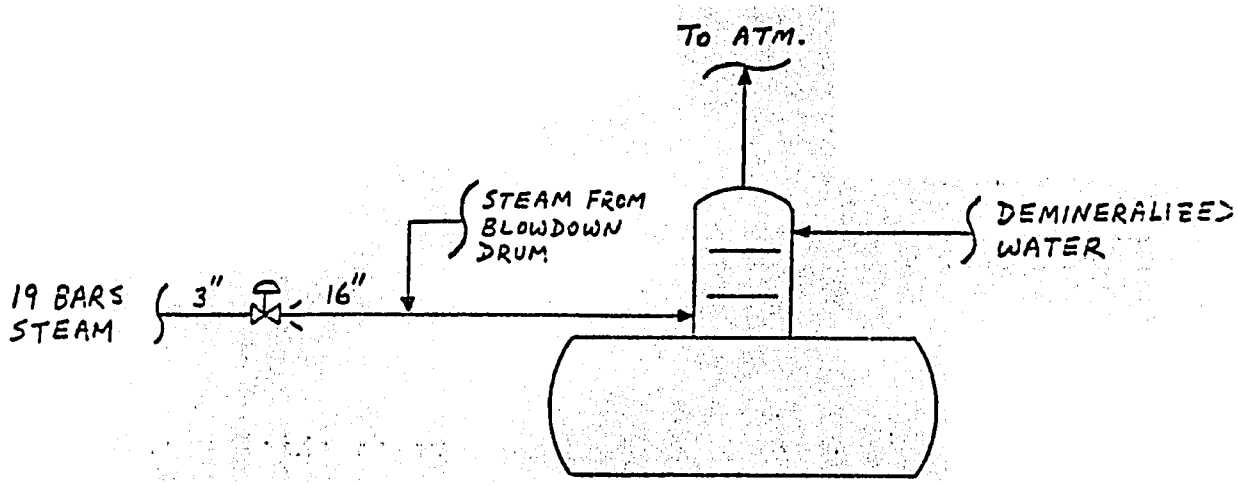

LEGEND

EXISTING EQUIPMENT
NEW EQUIPMENT

PROCESS SKETCH
Use Low Pressure Instead of High Pressure Steam for Deaerator
ENERGY CONSERVATION OPPORTUNITY

ECO CD-A-16

PLANT SHOBRA AND FIBER FACTORIES

LOCATION CAIRO. EGYPT

SKETCH 1 OF 1

INVESTIGATE PUTTING COVERS ON J BOXES AND OTHER EQUIPMENT

Savings LE : 36,000
Investment Cost LE: 22,800
Payout YRS : 0.63 (8 months)

ECO # CD-A-17

1.0 PURPOSE

The purpose of this ECO is to reduce the steam leakage from equipment, particularly the "J" boxes in the Shobra plant.

2.0 PROCESS DESCRIPTION

Excessive steam leakage was noted during the preaudit, emitting especially from the tops of "J" boxes, items J-1 and J-3 in the Shobra plant. Because of this, the possibility of limiting this leakage by the installation of covers was first noted. Subsequently, discussion were held with a leading manufacturer of "J" boxes in the United States. The manufacturer stated that this leakage can be substantially reduced by the proper control of the steam flow to each "J" box. Since no control is currently used on this flow we recommend the following be initiated:

a. Firstly, install an automatic steam control valve to maintain 100°C within the "J" box.

b. Secondly, if excessive leakage is still observed install a cover on the boxes. Due to the mechanism installed over the "J" box to distribute the cloth, it is necessary to construct a box around and over the present platform built over the "J" box. It is important to note that the cover should not allow

the the "J" box to become pressurized. This should not happen, due to the opening required for the cloth.

In addition to the "J" box leakage, steam leakage is evident over half of the ten dye jiggers in the Shobra plant. Five of the jiggers currently have partial covers over the baths, while the other five machines, even though they are identical, otherwise, do not have covers. We recommend that covers be installed to reduce the heat loss from the dye baths.

3.0 EQUIPMENT LIST/SIZE

A. "J" boxes, items J-1 and J-3

1. Firstly install a 2" control valve in the 2" steam supply line controlled by a temperature sensor in the box as indicated on sketch SK-17-A. The cost of this valve is included in ECO #CD-A-2
2. Secondly, if required after the controller is installed, construct the housing over the box as shown on sketch SK-17-A

B. Dye Jiggers, items DJ-6,7,8,9,10
Sketch SK-17-B indicates the approximate dimensions of aluminum covers to be provided and installed.

4.0 PREDICTED ENERGY SAVINGS

The estimated savings in current steam loss from each "J" box is approximately 115 Kg/hr. or half of the steam admitted to each box under controlled conditions. This assumes that the control valve, as described above is installed in the steam line and the cover is also installed.

For the dye jiggers, the energy savings per jigger by installation of covers is difficult to estimate. If we use a conservative figure of 22 Kg/hr per jigger, the total loss for the five jiggers would be 115 Kg/hr.

Location	Quantity of steam Kg/hr	Steam Cost LE/Ton	Annual savings worldwide-LE
J Box J-1 and J-3	230	14.636	24000
Dye Jiggers	115	14.636	12000
Total	345		36000

5.0 INVESTMENT AND ASSOCIATED ECONOMIC EVALUATION

The total cost of materials and labor to provide covers for the "J" boxes and dye jiggers is LE 22800. The payout based on worldwide prices is 0.63 years or 8 months.

If the "J" box covers are not required after installing the steam control valves, the investment cost for this ECO is LE 9800 with a payout based on worldwide prices of 0.27 years.

6.0 CONCLUSION

The installation of the "J" box covers and dye jigger covers is very attractive. However, the "J" box covers may not be necessary if proper control of steam to the "J" boxes eliminates most of the steam leakage.

7.0 RECOMMENDATION

Initiation of this ECO is recommended.

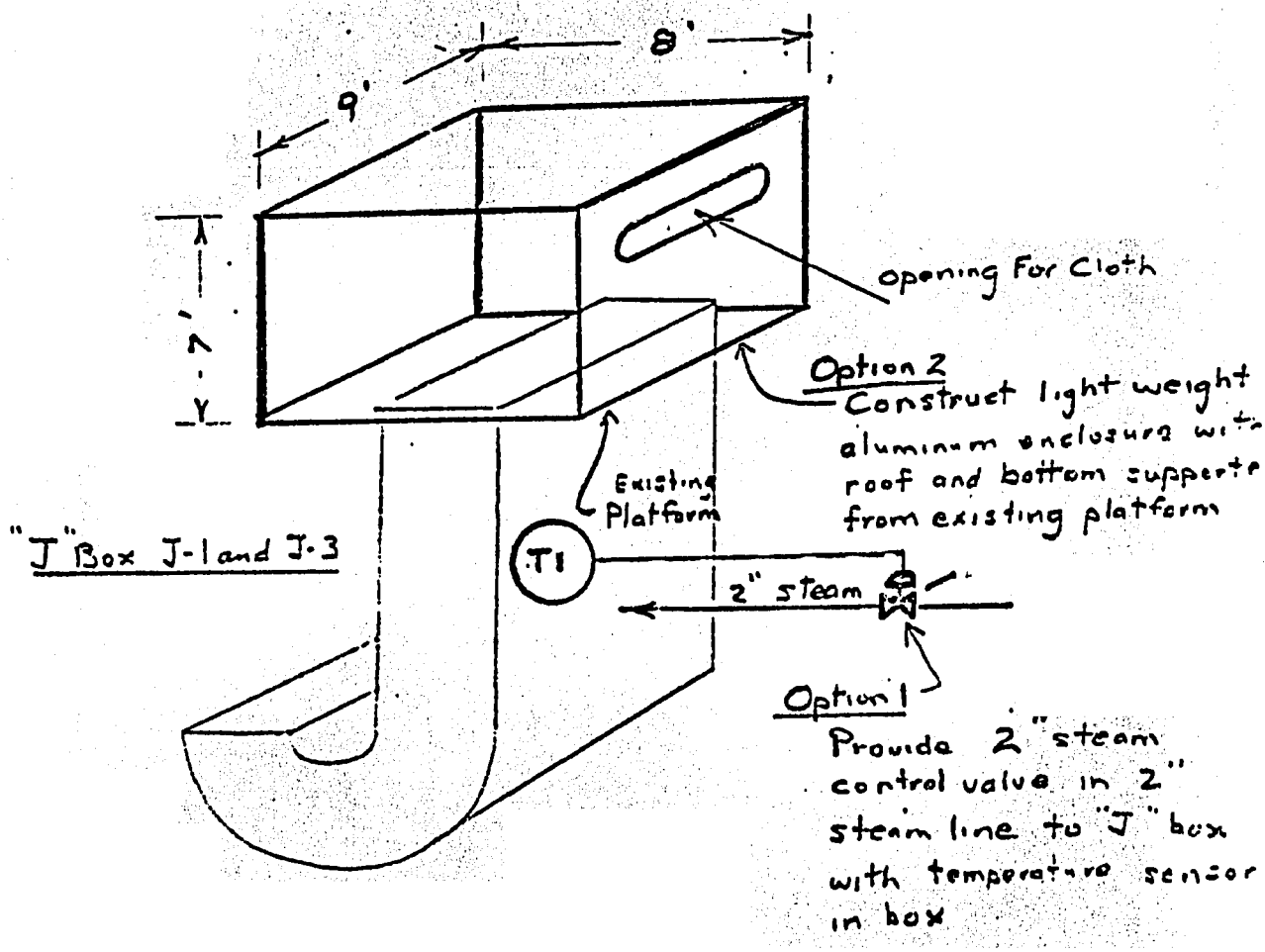

LEGEND

EXISTING EQUIPMENT
NEW EQUIPMENT

PROCESS SKETCH
Sk-17A

ENERGY CONSERVATION OPPORTUNITY

ECO CD-17

Investigate Putting Covers on J Boxes and Other Equipment

PLANT CAIRO DYEING AND FINISHING CO.

LOCATION CAIRO EGYPT

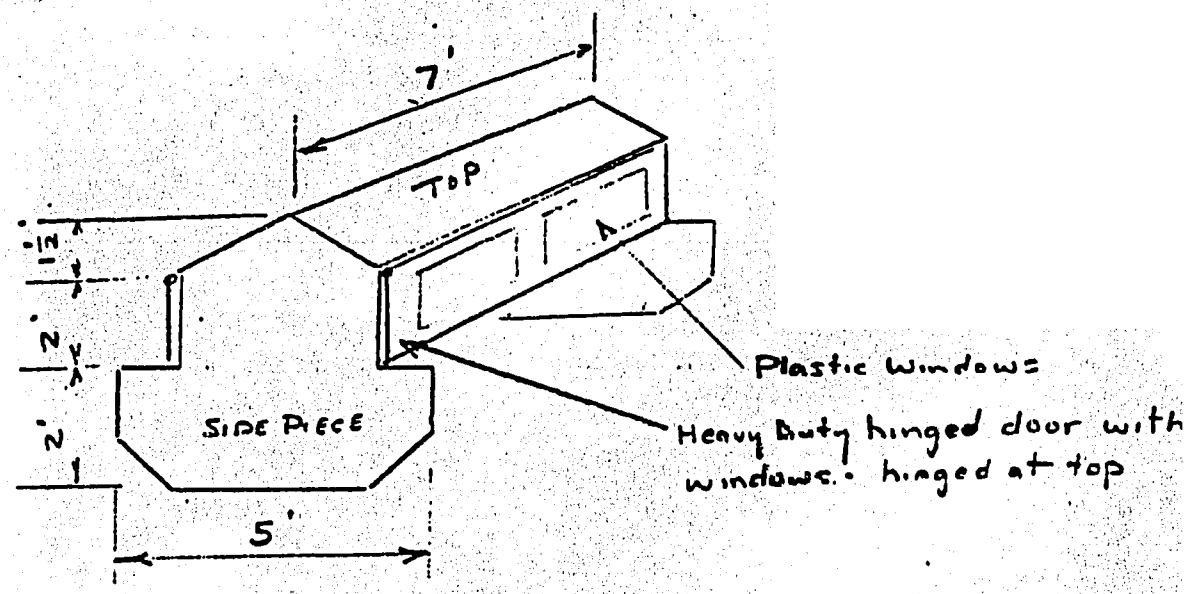

Provide aluminum cover over existing dye jiggers DJ.6/7/8/9/10 in Shobra Plant

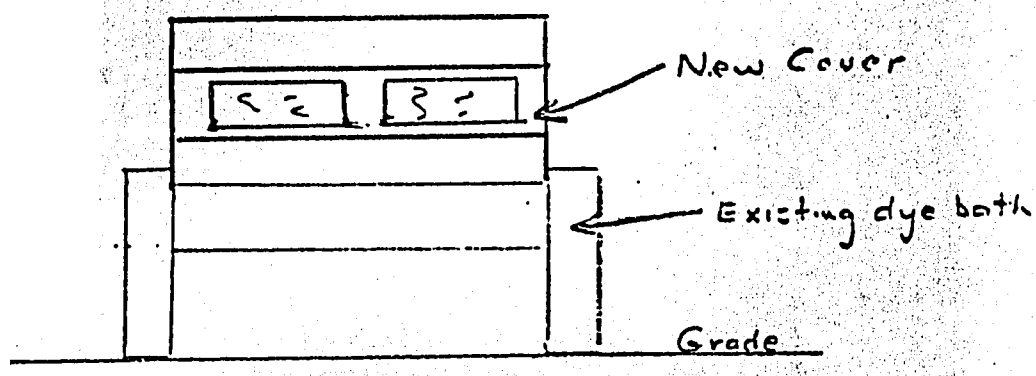

Elevation View

LEGEND

EXISTING EQUIPMENT
NEW EQUIPMENT

PROCESS SKETCH
SK-17 B

ENERGY CONSERVATION OPPORTUNITY:

ECO CD-17

Investigate Putting Covers on J Boxes and Other Equipment

PLANT CAIRO DYEING AND FINISHING CO.

LOCATION CAIRO EGYPT

REDUCE PEAK DEMAND OF ELECTRICITY FOR FIBER PLANT

Annual Savings LE:	53,500.00
Investment Cost LE:	0
Payout, Years:	Immediate

ECO #CD-A-18

1.0 PURPOSE

The purpose of this ECO is to reduce peak demand of electricity by rescheduling the shifts for certain plant work of Fiber plant to reduce the cost of monthly electrical billing rates.

2.0 PROCESS DESCRIPTION

The Fiber plant currently works six days a week (closed Friday). The Fiber plant operates 100 percent for the day shift,7:00 am to 3:00 pm; 70 percent for second shift,3:00 pm to 11:00 pm; 35 percent third shift,11:00 pm to 7:00 am. Peak demand is caused by using the Thermasol machine (approximately 640 kw)on the day shift. The Thermasol machine operates approximately 6 hours on the day shift only and operates only for 15 days per month.

It is proposed by this ECO to reschedule the Thermasol machine operation from the day shift 100 percent operation to the third shift 35 percent operation. This would provide savings for reduced peak demand.

3.0 EQUIPMENT LIST/SIZE

No new equipment is required for this ECO.

4.0 PREDICTED ENERGY SAVINGS

Based on the Thermasol machine operating 15 days per month and 6 hours per day, the predicted energy saving by rescheduling the Thermasol machine from the 100 percent day shift to the 35 percent early morning third shift will be as follows based upon a savings in "Constant Annual Charge" due to a reduction in "Maximum Stated Demand" from 2400 kw to 1650 kw.

"Constant Annual Charge" for 2400 kw
= 2400 kw x LE 71.35 = LE 171,253

"Constant Annual Charge" for 1650 kw
= 1650 kw x LE 71.35 = LE 117,728

Predicted Annual Savings = LE 53,525

The "Constant Annual Charge factor" LE 71.35 is based upon the current Egyptian factor of LE 7.75(adjusted for the ratio of worldwide to Egyptian electricity cost.

5.0 INVESTMENT AND ASSOCIATED ECONOMIC EVALUATION

No investment is required for this ECO. As shown in 4.0 above the total predicted saving would be LE 53,500.

6.0 CONCLUSIONS

Based upon the analysis indicated above, if the Thermasol machine operation were changed from the day shift to the third shift the predicted annual savings would be LE 53,500.

7.0 RECOMMENDATION

This ECO should be implemented without any delay.

FORM COMMITTEE TO PLAN AND IMPLEMENT ECO's

Annual Savings LE: Extensive
Investment Cost LE: 0
Payout, Years: Immediate

ECO #CD-A-19

1.0 PURPOSE

The purpose of this ECO is to insure that the conclusions and recommendations contained within the Audit Report are implemented in a timely manner through the formation of a committee who will be given the responsibility to establish short range and long range plans to implement both the no cost/low cost and the investment ECO's.

2.0 PROCESS DESCRIPTION

Plant management must show its commitment to energy conservation by appointing a committee consisting of representatives from each department of the plant. The chairman of the committee is the energy coordinator for the plant, who should report directly to plant management.

The committee must meet at least once a month (more frequently when it is first getting started) to establish a concrete plan for energy conservation implementation. Its first priority is to begin implementation of no cost/low cost ECO's and to develop a plan and a budget for the implementation of investment ECO's.

The recommendations and priorities established in the audit report must be carefully studied by the committee to help formulate the most reasonable and effective plan possible for implementation.

Once implementation is begun the committee must continue to closely monitor the results and compare the savings actually achieved to those originally predicted In this way the effectiveness of the program and the achievement of previously established goals for reduction in energy consumption can be firmly substantiated.

An example of the systems and methods used to implement this ECO is included in the Appendix "E".

3.0 EQUIPMENT LIST/SIZE

No new equipment and no new personnel are needed to form the committee.

4.0 PREDICTED ENERGY SAVINGS

This will be a function of the committee's effectiveness in seeing to it that the ECO's recommended in the Audit Report are implemented in a timely manner.

5.0 INVESTMENT AND ASSOCIATED ECONOMIC EVALUATION

None, not applicable to this ECO.

6.0 CONCLUSIONS

Formation of the committee and appointment of the energy conservation coordinator are truly a crucial initial step in the establishment of an effective program of energy conservation.

7.0 RECOMMENDATION

Formation of the committee and appointment of the energy conservation coordinator should proceed without delay as the first completely implemented no cost/low cost ECO.

PUBLICITY TO MAKE EMPLOYEES AWARE OF IMPORTANCE OF ENERGY CONSERVATION

Annual Savings LE:	Extensive
Investment Cost LE:	0
Payout, Years:	Immediate

ECO #CD-A-20

1.0 PURPOSE

The purpose of this ECO is to make all employees of the company aware of the importance of energy conservation, through the use of publicity, memos, newsletters, etc. Doing this will help insure that each employee will contribute toward making the overall energy conservation program a success.

2.0 PROCESS DESCRIPTION

In any effective energy conservation program, ideas must flow in two directions, from management to the employees and from the employees up to management. Management must take the first step by showing its commitment to energy conservation through publicity such as posters, memos, newsletters, suggestion boxes, and contests/awards for the best energy conservation ideas submitted by employees. Once all employees see that energy conservation is being treated as a serious and important matter by their company, they in turn will act in the same way.

Responsibility for seeing that employees are made aware of the importance of energy conservation must be shared by both plant management and by the committee responsible for energy conservation implementation.

An example of the systems and methods used to implement this ECO is included in the Appendix.

3.0 EQUIPMENT LIST/SIZE

No new equipment and no new personnel are needed to implement this ECO.

4.0 PREDICTED ENERGY SAVINGS

Not applicable to this ECO.

5.0 INVESTMENT AND ASSOCIATED ECONOMIC EVALUATION

A modest annual budget of approximately LE 1,000 should be established to pay for the publicity material (posters, newsletters, etc.) needed to implement this ECO.

6.0 CONCLUSIONS

Although it may not be possible to precisely measure the effectiveness of an employee awareness program, it is nevertheless a most necessary step in establishing the proper mental attitude needed to initiate an effective and comprehensive energy conservation program.

7.0 RECOMMENDATION

Immediately following the formation of the energy conservation committee, a program of employee awareness should be initiated as the second implemented no cost/low cost ECO.

USE OF LESS EXPENSIVE HEAT TRANSFER MEDIUM FOR VARIOUS OIL BOILERS	Annual Savings LE:	None
	Investment Cost LE:	None
	Payout, Years:	None

ECO #CD-A-21

1.0 PURPOSE

The purpose of this ECO is to investigate the possibility of using a less expensive heat transfer medium than the Thermomobile #605 oil currently being used in the six existing oil boilers.

2.0 PROCESS DESCRIPTION

Currently the plant has six oil boilers, two in the Shobra plant and four in the Fiber plant, which use Thermomobile #605 oil or alternatively Caltex Texatherm oil (which is somewhat less expensive) as the heat transfer medium.

The plant purchases the heat transfer medium in 200 liter drums containing a net weight of approximately 206 kilograms of oil. Historically the plant has been consuming a total of approximately five drums of oil per year to make up for losses in the entire six boiler system.

3.0 EQUIPMENT LIST/SIZE

Not applicable to this ECO.

4.0 PREDICTED ENERGY SAVINGS

In the table given below we compare the heat transfer medium currently being used by the plant with three, commonly used, other heat transfer media, each having similar physical properties.

Name of Heat Transfer Medium	Thermomobile #605 or Texatherm (Currently Used)	Therminol "55"	Syltherm "800"	Dowtherm "A"
Cost, LE/KG	0.57	2.79	8.80	.92
Estimated Yearly Consumption, KG	1,030	1,030	1,030	1,030
Yearly Cost, LE	587.1(	2,873.70	9,064.00	5,067.6

As can be readily seen from the table above, the heat transfer medium currently being used is by far most economical alternative and thus there is no justification for making any changes. Perhaps in the future, when petroleum prices are no longer subsidized, this will no longer be true.

5.0 INVESTMENT AND ASSOCIATED ECONOMIC EVALUATION

Not applicable to this ECO.

6.0 CONCLUSIONS

Continue to use either Thermomobile #605 or Caltex Texatherm oil as the heat transfer medium, since it has now been shown to be the most economical alternative.

7.0 RECOMMENDATION

No new action or implementation required.

REDUCE HEAT LOSSES
IN MAZOUT STORAGE SYSTEM

Savings (LE)	: 30,600
Investment cost (LE)	: 118,100
Payout, years	: 3.86

ECO # CD-A-22

1.0 PURPOSE

The purpose of this ECO is to reduce heat losses in the mazout storage system mainly by properly insulating the three large currently uninsulated mazout tanks whose contents must be kept hot to insure proper pumpability of the contained mazout.

2.0 PROCESS DESCRIPTION

The three (3) storage tanks are located out-of-doors. Each tank is approximately 7.3 meters in diameter and 7.3 meters in height. All are uninsulated. Heating coils supplied by steam are installed in the bottom of each tank. Some of these coils are currently in need of repair and this should be done as a maintenance item, as soon as possible.

In order to maintain the mazout in a pumpable condition the mazout must be maintained at 49°C Heat loss calculations were performed using the "Heatalyzer Economic Insulation Thickness" computer program. The economic insulation thickness, based on the installation of fiberglass blanket insulation, is 40 mm.

3.0 EQUIPMENT LIST

Fiberglass blanket insulation of 40 mm thickness shall be provided on the sides and top of each tank. Galvanized steel jacketing shall cover the insulation.

4.0 PREDICTED ENERGY SAVINGS

Based on the output of the computer program, the present value of the heat saved by installation of 1½ inches (40 mm) of insulation is LE 0.786 LE/m² for the sides of the tank and LE 0.935 LE/m² for the top of the tank. The value of the total heat saved for each tank is LE 10200/year or a total of LE 30600 for the three tanks annually.

5.0 INVESTMENT AND ASSOCIATED ECONOMIC EVALUATION

The total investment for material and its installation is LE 118,100 for three tanks. The payout is 3.86 years

6.0 CONCLUSIONS

The installation of 1½ inches (40 mm) of insulation on the sides and top of each of the mazout tanks is justified with a payout of 3.86 years.

7.0 RECOMMENDATION

This ECO should be implemented.

MODIFY THERMASOL MACHINE TO ELIMINATE ELECTRIC HEATING

Annual Savings LE : 40,600
Investment Cost LE: 100,000
Payout, YRS : 2.46

ECO #CD-B-1

1.0 PURPOSE

The purpose of this ECO is to eliminate the currently high electrical consumption used for heating by the existing Thermasol machine, by modifying the machine to use either steam or hot oil instead of electricity.

2.0 PROCESS DESCRIPTION

The Thermasol machine is currently the largest single user of electricity in both the Shobra plant and the Fiber plant. This machine, which is located in the Fiber plant, uses approximately 640 kw (540 kw for heating and 100 kw for other operations) and is run for six (6) hours per day for approximately fifteen (15) days per month (see ECO-CD-A-18).

It is now being proposed to modify the existing machine so that instead of using electricity for heating it uses instead either steam or hot oil.

3.0 EQUIPMENT LIST/SIZE

The Thermasol machine vendor has given the following preliminary estimate of what modifications would be required for the Thermasol machine to use either hot oil or steam:

16 new air heaters
16 new sieves
8 temperature regulating units
16 locking valves
8 throttle disks
lines within the machine

4.0 PREDICTED ENERGY SAVINGS

Based on the current operation of the Thermasol machine in which it is run for six (6) hours per day for fifteen (15) days per month at a heating rate of approximately 540 kw, the annual cost for electrical heating is LE 53,700. If mazout were used instead, to produce either steam or hot oil as the heating medium, the annual heating cost would be LE 13,000, based on worldwide prices. Thus there would be a predicted annual savings of LE 40,600, if the Thermasol machine could be modified to use either steam or hot oil, rather than electricity, for heating.

5.0 INVESTMENT AND ASSOCIATED ECONOMIC EVALUATION

The vendor of the Thermasol machine has provided preliminary information to define the modifications required and has indicated that the associated investment cost would be 140,000 Deutsche marks, not including erection. Based upon this preliminary information, an allowance of LE 100,000 should be taken as a very rough estimate, for an "all in" installation.

Based upon an allowance of LE 100,000 the payout for the required modifications would be 2.46 years.

6.0 CONCLUSIONS

Based upon the vendor's very rough estimate the payout would be 2.46 years. This must, of course, be recalculated when better information becomes available from the vendor. If, however, the better information from the vendor does not produce a significantly lower investment, it would appear that a more attractive approach to solving this problem would be to implement ECO #CD-A-18.

7.0 RECOMMENDATION

Implement ECO #CD-A-18 instead of this ECO, unless a significantly lower investment is proposed by the Thermasol machine vendor.

CONDENSATE COLLECTION SYSTEM

Annual Savings LE : 99,100
Investment Cost LE: 84,700
Payout, YRS : 0.85
(10 months)

ECO # CD-B-2

1.0 PURPOSE

The purpose of this ECO is to collect the steam condensate and send it hot to the deaerator. This helps conserve energy by minimizing the need to demineralize raw makeup water and by lowering the steam requirement for heating the water sent to the deaerator to its operating temperature.

2.0 PROCESS DESCRIPTION

At present all the steam condensate from both the Shobra and Fiber Factories is sent hot to the sewer. It is now proposed to provide for each factory a new condensate collection drum and pump(s), each sized to handle 100 percent of the steam consumed if it were all recovered as condensate and to pump the recovered condensate into an existing currently unused condensate drum. The existing currently unused condensate pump(s) will pump the condensate to the deaerator. The flashed steam from the new condensate drums is also sent to the deaerator. The steam condensate collection system is shown in the sketches and tabulations which follow.

3.0 EQUIPMENT LIST/SIZE

The equipment required is listed below and shown in the sketches included at the end of this ECO (the suitability of the existing condensate drum to operate at 0.7 Bar is to be confirmed before implementing the process scheme outlined in section 2).

- DRUMS

	Shobra Factory	Fiber Factory
Item No.	D-1	D-1
Service	Condensate Collection Drum	Condensate Collection Drum
Size	1.5 meters DIA x 3 met.	1.4 meters DIA x 3 met.
Design press.	3.5 Bar	
Design temp.	160°C	
Material	CS	
Insulation	Yes	

- PUMPS

	Shobra Factory	Fiber Factory
Item No.	P-1 and P-2	P-1 and P-2
Service	Condensate Pump and Spare	Condensate Pump and Spare
Capacity	16.5 m^3/hr	11.1 m^3/hr
Head	9.1 meters	
Motor HP	2 HP	1.5 HP
Type	Centrifugal	
Material	CS	

- ESTIMATED PIPING LENGTH

SHOBRA FACTORY

1. Condensate piping within Shobra Factory:

Line size inches	Estimated length meters
4	30
3	120
2	180
1	60

2. On overhead pipe rack:

Line size inches	Estimated length, meters	Fluid	Destination
4	150	Steam	To deaerator
3	120	Condensate	To 4" inlet line of existing condensate drum in boiler plant

FIBER FACTORY

1. Condensate piping within Fiber Factory:

Line size inches	Estimated length meters
3	90
2	150
1	60

2. On overhead pipe rack:

Line size inches	Estimated length, meters	Fluid	Destination
3	75	Steam	To deaerator
3	60	Condensate	To 4" inlet line of existing condensate drum in boiler plant

- INSTRUMENTS

1. FLOW INDICATORS - FI

a. On 3" steam line from Shobra Factory condensate collection drum.
b. On 3" condensate line from Shobra Factory condensate pump.
c. On 3" steam line from Fiber Factory condensate collection drum.
d. On 2" condensate line from Fiber Factory condensate pump.

2. LEVEL INSTRUMENTS

a. Interface level indicating controller for Shobra Factory condensate collection drum.
b. Interface level indicating controller for Fiber Factory condensate collection drum.

3. PRESSURE INSTRUMENTS

a. Pressure indicating controller for Shobra Factory condensate collection drum.
b. Pressure indicating controller for Fiber Factory condensate collection drum.

4. CONTROL VALVES

a. 2" control valve on 3" steam line from Shobra Factory condensate collection drum.
b. 2" control valve on 3" condensate line from Shobra Factory condensate pump.
c. 2" control valve on 3" steam line from Fiber Factory condensate collection drum.
d. 2" control valve on 2" condensate line from Fiber Factory condensate pump.

5. SAFETY VALVES

a. Pressure safety valve (PSV) for Shobra Factory condensate collection drum.
b. Pressure safety valve (PSV) for Fiber Factory condensate collection drum.

4.0 PREDICTED ENERGY SAVINGS

Due to a lack of presently installed instrumentation it is very difficult to measure the flow rate of condensate from various individual steam users. Therefore as a conservative basis in estimating the

energy savings, we are assuming that only 50 percent of the total condensate produced can be recovered. This must, of course, be confirmed later when proper instrumentation for steam flow measurement is installed.

If 50 percent of the steam condensate is collected from the Shobra and Fiber factories and pumped to the deaerator, the predicted energy savings (based on 7080 operating hours per year) will be as follows.

	Energy Savings corresponding to	World Price	Savings LE/year
Steam Condensate	70,800 MT/year	1.4636 LE/MT	103,600
Power	- 48,850 KWH/year	0.092 LE/KWH	- 4,500
		TOTAL	99,100

5.0 INVESTMENT AND ASSOCIATED ECONOMIC EVALUATION

The total investment cost to purchase and install the equipment and materials described above is LE 84,700

The payout on a worldwide basis is 0.85 years or 10 months for an annual energy savings of LE 99,100.

6.0 CONCLUSIONS

This ECO has an attractive payout of 8.5 months. We strongly recommend that the condensate be collected and pumped to the deaerator to minimize the need to demineralize raw makeup water and lower the steam requirement for the deaerator.

7.0 RECOMMENDATION

This ECO should be implemented after first installing proper instrumentation for steam flow measurement which

would allow for proper confirmation or revision of the basic assumption that 50 percent of the condensate produced can be recovered.

CONDENSATE COLLECTION SYSTEM

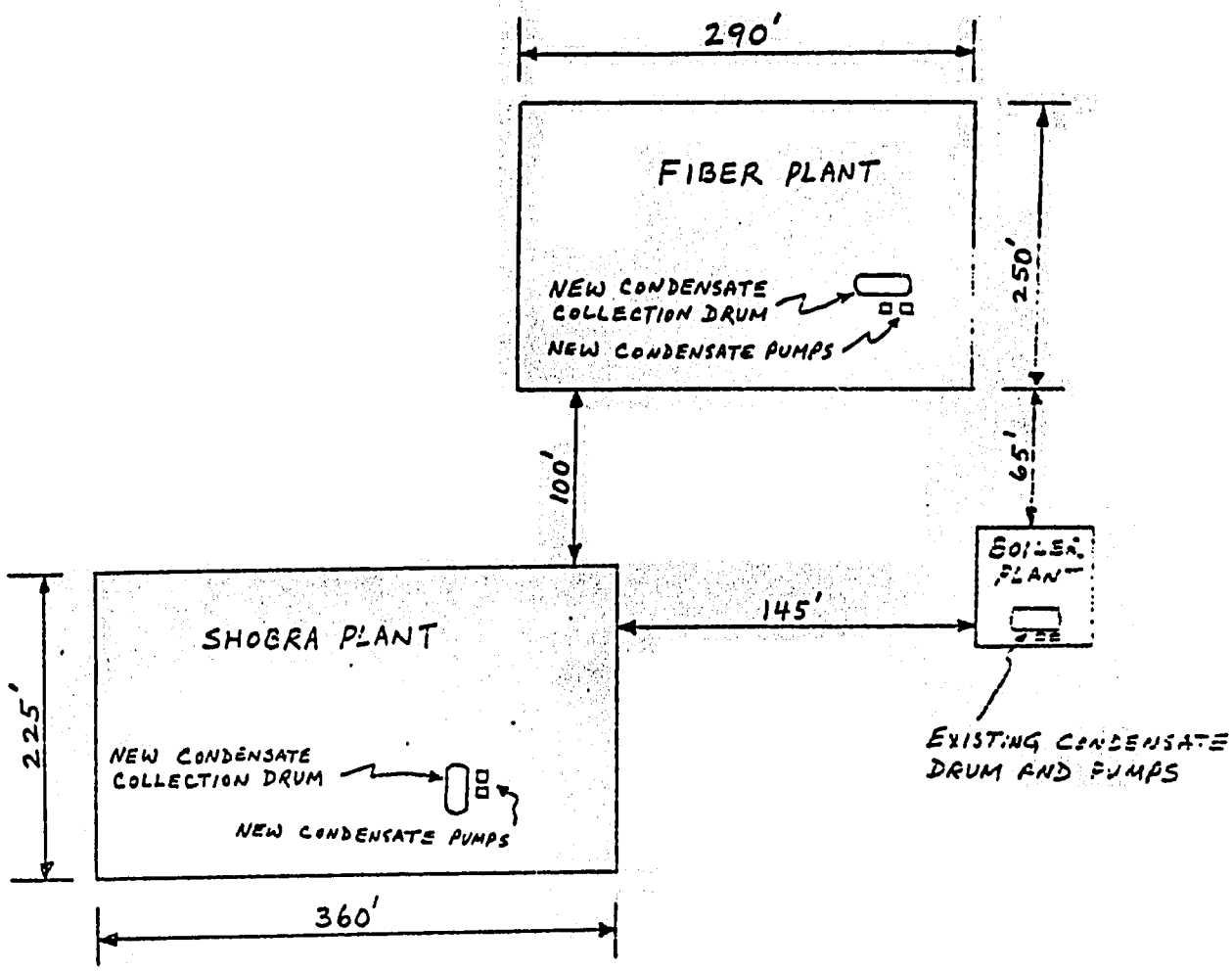

JOINT ENGINEERING GROUP
OEP / FWEC
FOR: CAIRO DYEING AND FINISHING CO.

REF.
DATE
PAGE 152.
REV.

CONDENSATE COLLECTION SYSTEM

EQUIPMENT DATA FOR SHOBRA FACTORY			
ITEM NO.	: D-1	ITEM NO.	: P-1 AND P-2
SERVICE	: CONDENSATE COLLECTION DRUM	SERVICE	: CONDENSATE PUMP AND SPARE
SIZE	: 1.5 m x 3 m	CAPACITY	: 16.5 m^3/HR
DESIGN PRESS	: 3.5 BAR	HEAD	: 9.1 m
DESIGN TEMP.	: 160°F	MOTOR HP	: 2 HP
MATERIAL	: CS	TYPE	: CENTRIFUGAL
INSULATION	: YES	MATERIAL	: CS

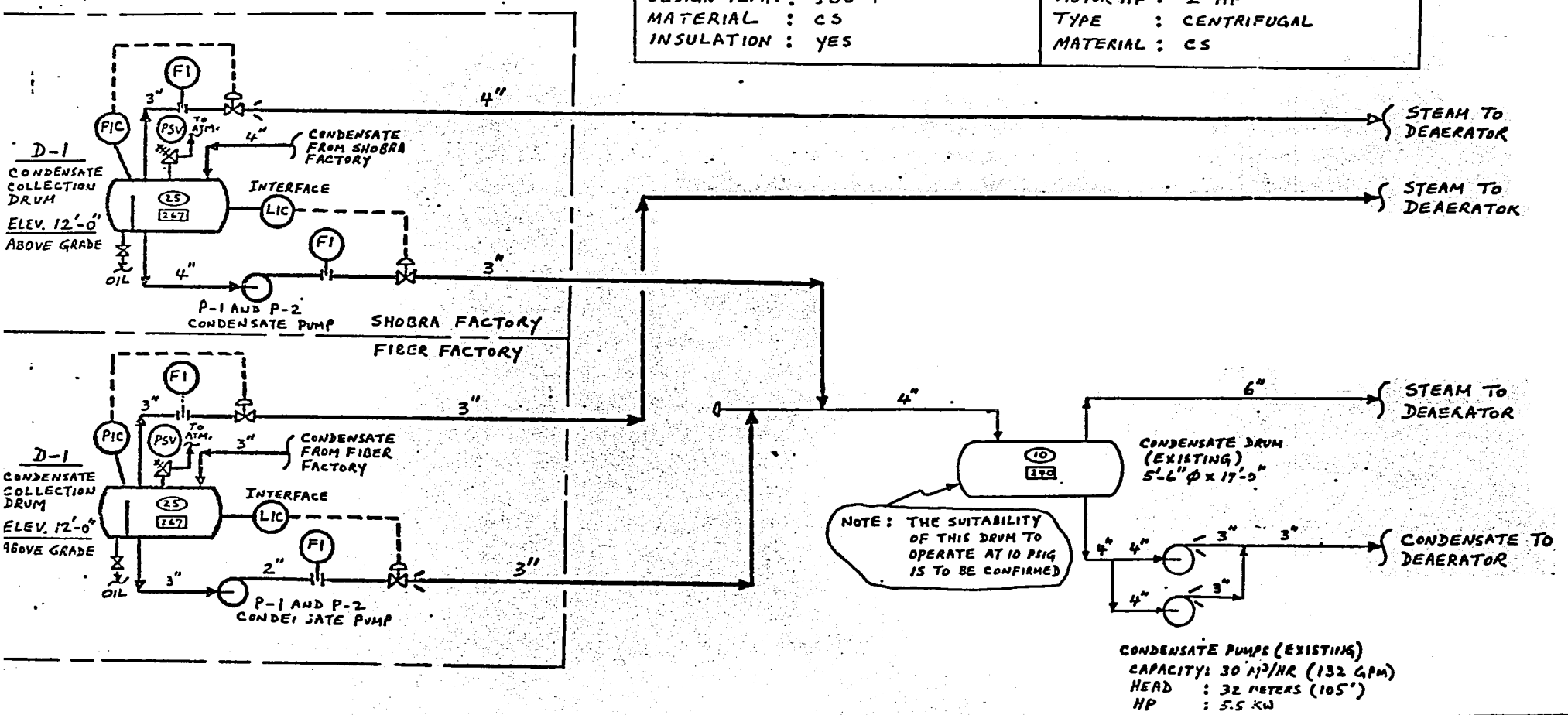

EQUIPMENT DATA FOR FIBER FACTORY			
ITEM NO.	: D-1	ITEM NO.	: P-1 AND P-2
SERVICE	: CONDENSATE COLLECTION DRUM	SERVICE	: CONDENSATE PUMP AND SPARE
SIZE	: 1.4 m x 3 m	CAPACITY	: 11.1 m^3/HR
DESIGN PRESS.	: 3.5 BAR	HEAD	: 9.1 m
DESIGN TEMP.	: 160°C	MOTOR HP	: 1½ HP
MATERIAL	: C.S.	TYPE	: CENTRIFUGAL
INSULATION	: YES	MATERIAL	: CS

LEGEND

- EXISTING EQUIPMENT
- NEW EQUIPMENT
- OPERATING PRESSURE, PSIG
- OPERATING TEMPERATURE, °F

PROCESS SKETCH
Condensate Collection System
ENERGY CONSERVATION OPPORTUNITY:
ECO CD-B-2
PLANT SHOBRA AND FIBER FACTORIES
LOCATION CAIRO, EGYPT
SKETCH 2 OF 2

RECOVERY OF HEAT FROM THE STACKS OF THE EXISTING FOUR OIL BOILERS

Annual Savings LE : 23,500
Investment Cost LE: 60,000
Payout YRS : 2.55

ECO #CD-B-3

1.0 PURPOSE

The purpose of this ECO is to study the recovery of heat from the stacks of the existing four oil boilers fired with mazout.

2.0 PROCESS DESCRIPTION

The recovery of heat from the stack of each of the four oil boilers was studied based on the use of heat pipes to preheat the incoming combustion air.

The heat pipes used for this ECO are manufactured by Q-Dot Corporation. These are air to air heat pipe heat exchangers that utilize sealed tubes containing a heat transfer medium that pass through both the hot and cold sides of the units. Thermal energy applied to either end of the pipe causes the heat transfer medium at that end to vaporize The vapor then travels to the other end of the pipe where thermal energy is removed, causing the vapor to condense into liquid again, thereby giving up the latent heat of condensation. The condensed liquid then flows back to the hot side to be reused, thus completing the cycle.

Each of the four oil boilers has a 500 mm diameter exhaust stack. The heat pipe unit will be mounted

in the exhaust stack about 1 meter above the oil boiler. This stack will then continue through the roof as currently arranged. On the other side of the heat pipe ambient air will pass through a forced draft blower, then through the heat pipe and finally into the present air intake on the existing blower/burner assembly.

Sketch B3-A attached indicates the arrangement of the heat pipe above the oil boiler. Sketch B3-B shows the arrangement of heat pipe units and the principal of operation of a heat pipe sealed tube.

3.0 EQUIPMENT LIST/SIZE

The heat pipe recovery system for each of the four oil boiler stacks will consist of the following equipment:

1. The heat pipe for each of the four oil boiler stacks will be as follows:

   Manufacturer - Q.-Dot Corporation, Garland, Texas
   Number Required- One (1)
   Model - TRU -625
   Material - Steel
   Fin Spacing - 8
   Rows - 5
   Height - Two 21" in series
   Length - 72"
   Face Area - $10\frac{1}{2}$ ft²

2. A blower will be provided for the inlet ambient air to each heat pipe unit as follows:

Flow	2400 ACFM @60°F
Exhaust Pressure	3" H_2O
Horse power	5

3. New duct work will be as follows for each of the four heat pipe installations:

   a. 7.5 meters of 500 mm diameter aluminium duct including three elbows.

   b. 4 duct fittings from 500 mm diameter to 500 mm square.

4. Steel support of heat pipe units from grade and support of inlet air ducting from.

4.0 PREDICTED ENERGY SAVINGS

By use of the heat pipe unit on the exhaust gas stack of each oil boiler, the exit gas temperature is reduced from 300°C to 170°C. This represents an efficiency improvement of approximately five and half (5.5) percent which relates into a savings in mazout fired to each boiler of approximately 48.6 tons/yr. and 97 tons/yr. for the two oil boilers. At a worldwide cost of LE 241.8 per metric ton for mazout this represents a savings of LE 23,500 annually.

5.0 INVESTMENT AND ASSOCIATED ECONOMIC EVALUATION

The total cost to purchase and install this equipment is LE 60,000

The payout on a worldwide basis is 2.55 years.

6.0 CONCLUSION

The installation of a heat pipe unit on each oil boiler exhaust stack should be considered with a payout period of 2.55 years.

7.0 RECOMMENDATION

This ECO should be implemented.

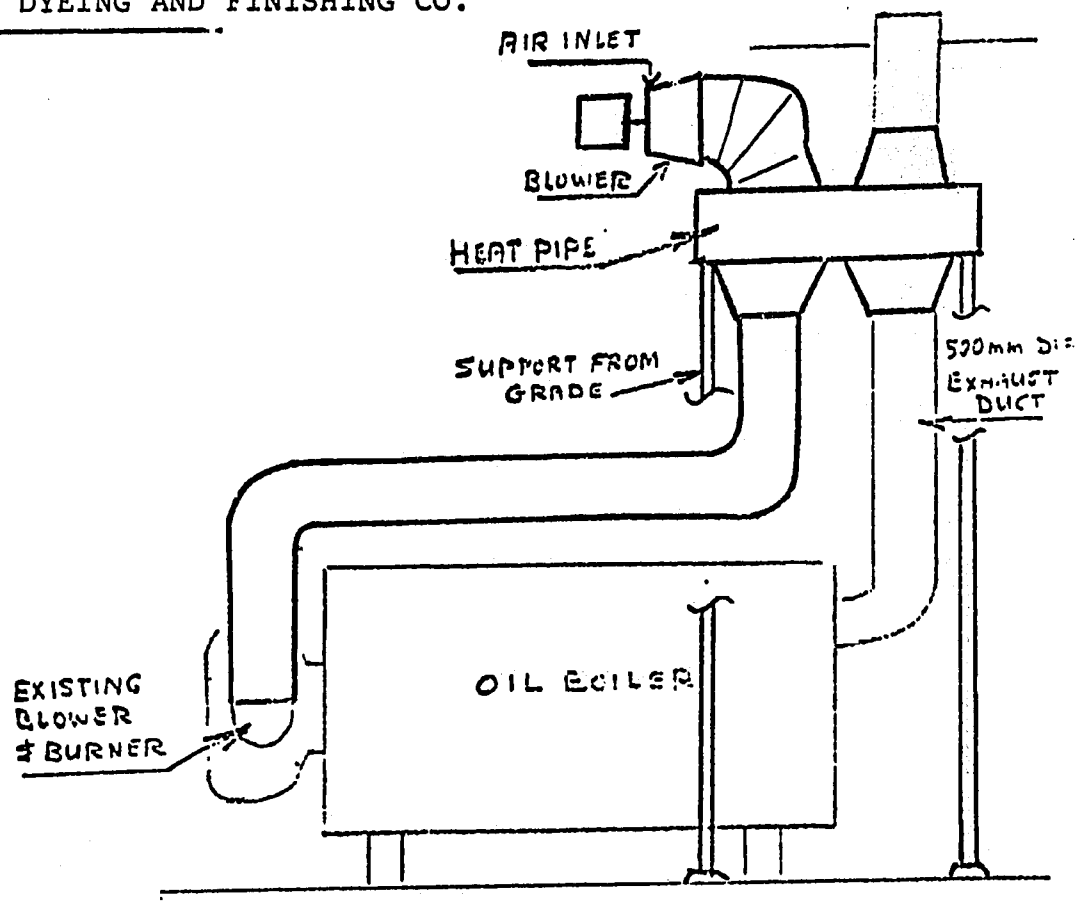

LEGEND

EXISTING EQUIPMENT

NEW EQUIPMENT

PROCESS SKETCH
B 3-A

ENERGY CONSERVATION OPPORTUNIT

ECO CD - B3

Recovery of Heat From the Stacks of the Existing Four Oil Boilers

PLANT CAIRO DYEING AND FINISHING CO

LOCATION CAIRO EGYPT

Q-dot Corporation
Q-Pipe Air to Air
Thermal Recovery Units

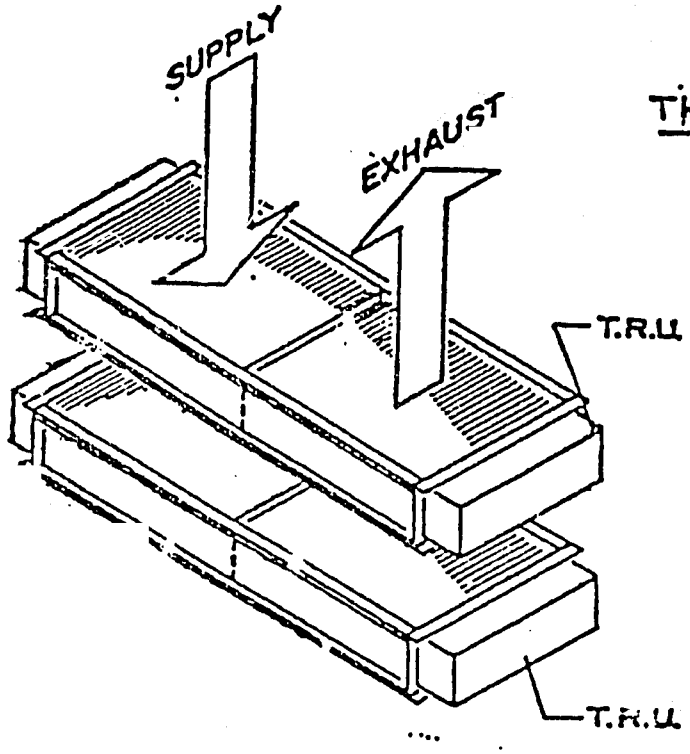

- TYPICAL SERIES UNIT
- HORIZONTAL INSTALLATION
- VERTICAL AIRFLOWS

NOTE: UNITS MAY BE MOUNTED IN SERIES, SIDE BY SIDE, FOR VERTICAL AND HORIZONTAL FLOWS

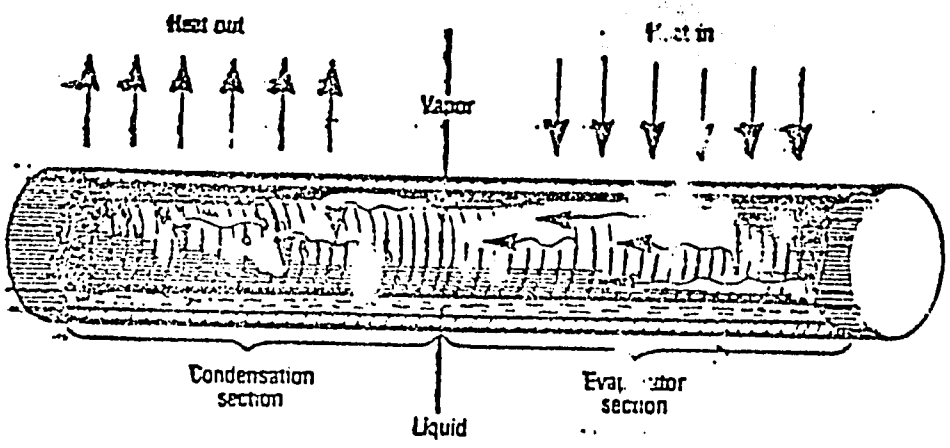

HEAT PIPE SEALED TUBE

LEGEND

EXISTING EQUIPMENT
NEW EQUIPMENT

PROCESS SKETCH
B3-B

ENERGY CONSERVATION OPPORTUNITY

ECO CD-B3

Recovery of Heat From the Stacks of the Existing Four Oil Boilers

PLANT CAIRO DYEING AND FINISHING

LOCATION CAIRO EGYPT

CAPACITOR INSTALLATION TO IMPROVE POWER FACTOR FOR TEXTILE PLANT	Annual Savings LE:	133,400
	Investment Cost LE:	119,500
	Payout, Years:	0.9 (10.7 Months)

ECO #CD-B-4

1.0 PURPOSE

The purpose of this ECO is to raise power factor from 70 percent to alternate evaluation cases of 80 percent, 90 percent and 96 percent power factor to reduce the cost of monthly electrical billing rates.

2.0 PROCESS DESCRIPTION

The Textile Plant, consisting of the Fiber Plant and the Shobra Plant has a power factor which is now approximately 70 percent.

It is proposed by this ECO to indicate the annual energy savings which could be realized by raising the power factor to 80 percent, 90 percent or 96 percent. The capacitors will be installed in each 380 volt substation of the Fiber Plant and Shobra Plant. Capacitor banks will be connected by cable to either existing or new 380 volt circuit breakers, installed high on the back wall behind 380 volt switchgear to provide safety for personnel in the electrical substation.

The proposed capacitor installation will provide higher power factor, which will reduce wasted energy consumption, and eliminate P.F. penalties on the electric bill.

3.0 EQUIPMENT LIST/SIZE

The electrical equipment required for this ECO will be capacitor banks of different rating kVar, with rack installed, power cable, circuit breakers or fused switches as required. See pages 5 and 6 of this ECO for table with number and sizes of capacitors.

4.0 PREDICTED ENERGY SAVINGS

Based on the Fiber Plant and Shobra Plant having an existing power factor of 70 percent, the predicted energy saving on an annual basis is as follows based on worldwide price of LE 0.092 per KWH:

Fiber Plant Ref. Table G of Section 3.4.

Annual KWH	Raise P.F. Percent To	Annual Cost		Annual Saving Percent*	Annual LE Saving
4,224,100	80	388,617.00	X	5	19,431.00
	90	388,617.00	X	10	38,862.00
	96	388,617.00	X	13	50,520.00

Shobra Plant Ref. Table E, of Section 3.4.

Annual KWH	Raise P.F. Percent To	Annual Cost		Annual Saving Percent	Annual LE Saving
6,927,200	80	637,302.40	X	5	31,865.00
	90	637,302.40	X	10	63,730.00
	96	637,302.40	X	13	82,849.00

Total Textile plant annual saving.

Raise P.F. Percent To	Fiber Plant Annual Saving LE		Shobra Plant Annual Saving LE		Plant Total LE
80	19,431.00	+	31,865.00	=	51,296.00
90	38,862.00	+	63,730.00	=	102,592.00
96	50,520.00	+	82,849.00	=	133,369.00

* Savings, as a result of a more favorable electric bill - see Appendix A, not including power savings from reduced line loss.)

5.0 INVESTMENT AND ASSOCIATED ECONOMIC EVALUATION

The total investment for electrical components as indicated in paragraph 3.0 above is as follows for Fiber and Shobra plant:

Raise P.F. Percent TO	Fiber Plant Investment LE		Shobra Plant Investment LE		Total Textile Plant Investment LE
80	18,600	plus	58,300	equals	76,900
90	34,500	plus	65,200	equals	99,700
96	47,300	plus	72,200	equals	119,500

The following economic evaluation is based on the above investment divided by the annual saving which equals payout time.

Raise P.F. To	Total Textile Plant Investment LE	Total Energy Annual Saving	Payout Time
80	76,900	51,296.00	18.0 months
90	99,700	102,592.00	11.7 months
96	119,500	133,369.00	10.7 months

6.0 CONCLUSIONS

Based on the analysis indicated above in paragraph 5.0, the payout time for raising the power factor percent to 96 is most attractive since it has slightly better than the 90 percent case, for a relatively small increase in investment. Therefore, this ECO recommends that the power factor be raised to 96 percent.

In addition to the above electrical energy saving, there are three important additional benefits when the power factor is raised to 96 percent for the Textile plant.

1) The release of electrical system capacity which provides more available electric power.

2) The voltage will rise a percentage which may require the changing of taps on transformers to lower the voltage to correct rating.

3) Improve the power system I^2R loss which can be calculated to be 40 percent. This improves cable capacity, transformer, switchgear and other electrical component efficiency.

4) The electric bill as received from the E.E.A. will be reduced.

5) Additional capacity will be made available at the main power station, since the power factor correction reduces current draw on the station, and since heating (line) losses are decreased.

7.0 RECOMMENDATION

This ECO should be implemented without any delay.

SUMMARY OF PRELIMINARY RATINGS OF CAPACITORS

1. Shobra Plant

Two Groups of Capacitors

a. Group 1 for substation units 1,2,3

Raise PF to	Rating KVAR	Number of Capacitors	Description
0.8	80	3	2x25 KVAR, 1x30 KVAR
0.9	170	4	3x50 KVAR, 1x20 KVAR
0.96	230	5	4x50 KVAR, 1x30 KVAR

b. Group 2 for substation units 8,9,10

Raise PF to	Rating KVAR	Number of Capacitors	Description
0.8	70	3	2x25 KVAR, 1x20 KVAR
0.9	140	3	2x50 KVAR, 1x40 KVAR
0.96	200	4	4x50 KVAR

2. Fiber Plant

Four Groups of Capacitors

a. Group 1 for substation unit 3

Raise PF to	Rating KVAR	Number of Capacitors	Description
0.8	100	2	2x50 KVAR
0.9	200	4	4x50 KVAR
0.96	275	6	5x50 KVAR, 1x25 KVAR

b. Group 2 for substation units 6,7

Raise PF to	Rating KVAR	Number of Capacitors	Description
0.8	75	2	1x50 KVAR, 1x25 KVAR
0.9	150	3	3x50 KVAR
0.96	200	4	4x50 KVAR

c. Group 3 for units 10,11

Raise PF to	Rating KVAR	Number of Capacitors	Description
0.8	30	1	1x30 KVAR
0.9	60	2	2x30 KVAR
0.96	85	2	1x55 KVAR, 1x30 KVAR

d. Group 4 for units 14,15,16,17

Raise PF to	Rating KVAR	Number of Capacitors	Description
0.8	100	2	2x50 KVAR
0.9	200	4	4x50 KVAR
0.96		6	5x50 KVAR, 1x30 KVAR

DEMAND CONTROLLER FOR	Annual Savings LE:	38,500
REDUCING ELECTRIC POWER	Investment Cost LE:	73,800
DEMAND FOR TEXTILE PLANT	Payout, Years:	1.92

ECO #CD-B-5

1.0 PURPOSE

The purpose of this ECO is to reduce peak demand of electricity by automatically shutting down Textile machinery when electrical power reaches a pre-determined electrical peak to minimize the cost of the "Constant Annual Charge."

2.0 PROCESS DESCRIPTION

The Textile Plant Shobra Plant now has a contract specifying a "maximum stated demand" of 960 kw and a normal electrical demand of 960 kw as is supported by 1984 consumption data. Based on information received from the plant this demand reaches a 1500 kw demand on occasion. The Fiber Plant has a normal electrical demand of 1500 kw (without the Thermasol unit operating) based on information received from the plant and audit team measurements (but not supported by 1984 consumption data), with a contract of 2400 kw as "maximum stated demand."

It is proposed by this ECO to automatically reschedule the use of non-essential electrical loads to automatically turn off, when the peak demand reaches a pre-set amount in the Shobra Plant. A Demand Controller with relays will be installed in the electric power substation, set for this duty in the Shobra Plant Substation. (The non essential equipment list will be described during the design phase).

This will provide savings for reduced peak demand during 24 hour plant electrical operation because the peak kw will not be permitted to reach the pre-set alowable peak value.

3.0 EQUIPMENT LIST/SIZE

The equipment required for this ECO is one Demand Controller instrument, several control relays in junction boxes, (depending on electrical equipment location) and some small control wire.

4.0 PREDICTED ENERGY SAVINGS

Based on the Demand Controller automatically preventing the Shobra Plant from reaching 1500 kw demand and not exceeding the 960 kw contract by automatically stopping non-essential units, the predicted annual saving would be as follows based upon a saving in "Constant Annual Charge" due to a reduction in "Maximum Stated Demand" from 1500 kw to 960 kw.

"Constant Annual Charge" for 1500 kw
= 1500 kw x LE 71.35 = LE 107,025.

"Constant Annual Charge" for 960 kw
= 960 kw x LE 71.35 = LE 68,496.

Predicted Annual Savings = LE 38,500.

The "Constant Annual Charge factor" LE 71.35 is based upon the current Egyptian factor of LE 7.756 adjusted for the ratio of worldwide to Egyptian electricity cost.

5.0 INVESTMENT AND ASSOCIATED ECONOMIC EVALUATION

The total investment for electrical components as indicated in paragraph 3.0 above, is LE 73,800 for the Shobra Plant installation. The predicted annual energy savings in paragraph 4.0 is LE 38,500, which yields a payout in 1.92 years.

6.0 CONCLUSIONS

Based on the analysis indicated above, if the electrical Peak Demand Controller and their associated components were installed in the Shobra Plant, the annual saving would be LE 38,500 which corresponds to a payout of 1.92 years.

Since the peak demand contract rate is high for the Fiber Plant this ECO recommends that the plant management review the electrical power requirements for the Fiber Plant with a possibility of having the demand contract rate lowered.

This ECO will provide an excellent payout provided that a sufficient number of non-essential or rescheduable loads can be identified.

7.0 RECOMMENDATION

This ECO should be implemented without any delay.

CONSIDER THE USE OF HEAT PIPES TO RECOVER HEAT FROM HOT AIR LEAVING DRYER STACKS

Annual Savings LE : 48,000
Investment Cost LE: 31,300
Payout YRS : 0.65 (7.8 months

ECO #CD-B6

1.0 PURPOSE

The purpose of this ECO is to consider the use of heat pipes to recover heat from the hot air leaving the dryers and/or finishing machine stacks to preheat the cold incoming air.

2.0 PROCESS DESCRIPTION

The heat savings that can be realized by the use of heat pipes was analyzed for the three exhaust air stacks from the Bruckner finishing machine in the Fiber factory.

The heat pipes used for this ECO are manufactured by Q-Dot Corporation. These are air to air heat pipe heat exchangers that utilize sealed tubes containing a heat transfer medium that pass through both the hot and cold sides of the units. Thermal energy applied to either end of the pipe causes the heat transfer medium at that end to vaporize. The vapor then travels to the other end of the pipe where thermal energy is removed, causing the vapor to condense into liquid again. Thereby giving up the latent heat of condensation. The condensed liquid then flows back to the hot side to be reused. thus completing the cycle. Details of a Q-pipe unit is shown on sketch B6-C.

The finishing machine currently has three exhaust stacks each exiting from a fan mounted on top of the machine and continuing by duct to the roof. The heat pipe unit will be mounted several feet over the blower in this ducting. On the other side of the heat pipe ambient air will pass through a forced draft fan, then through the heat pipe before entering the machine.

Currently, the flow of air is as shown on sketch B-6-B. Internal to the machine air is sucked into the heating coils at point A. Part of this air is ambient air sucked in through numerous small openings in the machine such as around doorways. To exclude the ambient air leakage into the machine, when the heat pipe unit is installed, the forced draft fan will exert a slight positive pressure on the air entering via the heat pipe.

3.0 EQUIPMENT LIST/SIZE

1. Each of the three stacks exiting the finishing machine will be provided with the following heat pipe exchanger:

   Manufacturer - Q-Dot Corporation, Garland, Texas.
   Number Required - One (1)
   Model - TRU - 425
   Material - Aluminum
   Fin Specing - 11 per inch; both sides
   Rows - 6, both sides
   Height - 27 inches
   Length - 48 inches
   Face Area - 72 inches

2. A blower will be provided for the inlet ambient air to each heat pipe unit as follows:

   Flow - 66 Nm^3/min ACFM @ 16°C
   Exhaust Pressure - 100 mm H_2O
   Horsepower - 5

3. New duct work will be as follows for each of the three heat pipe installations:

   a. 10 ft of 400 mm Dia. aluminum duct including one elbow.

   b. Steel support of heat pipe units from grade.

4.0 PREDICTED ENERGY SAVINGS

By use of the heat pipe units the incoming supply air or makeup air is heated to 101°C. This is an increase of (101°C-27°C) or 74°C over the current makeup air temperature based on a yearly average ambient in the plant of 27°C. Calculations indicate that the higher makeup air temperature results in an energy savings in the hot oil system of 300,000 BTU/hr for each heat pipe unit and a total of 900,000 BTU/hr for the three heat pipes on the finishing machine.

The hot oil is heated in a hot oil boiler fueled by mazout. The boiler has a fired duty of 9,915,000 BTU/hr. Using a heating value of 18,000 BTU/lb for mazout and a boiler efficiency of 80%, the energy savings from the heat pipes calculates to a yearly savings of 200 tons of mazout. At a world-wide cost of LE 241.8/met.ton. This represents a savings of LE 48000 per year.

5.0 INVESTMENT AND ASSOCIATED ECONOMIC EVALUATION:

The total cost to purchase and install this equipment is LE 31,300.

The payout on a worldwide basis is 0.65 years or 7.8 months.

6. CONCLUSIONS

The installation of a heat pipe unit on each of the exhaust stacks of the finishing machine is very attractive with a payout period of 0.65 yrs.

7.0 RECOMMENDATION

This ECO should be implemented.

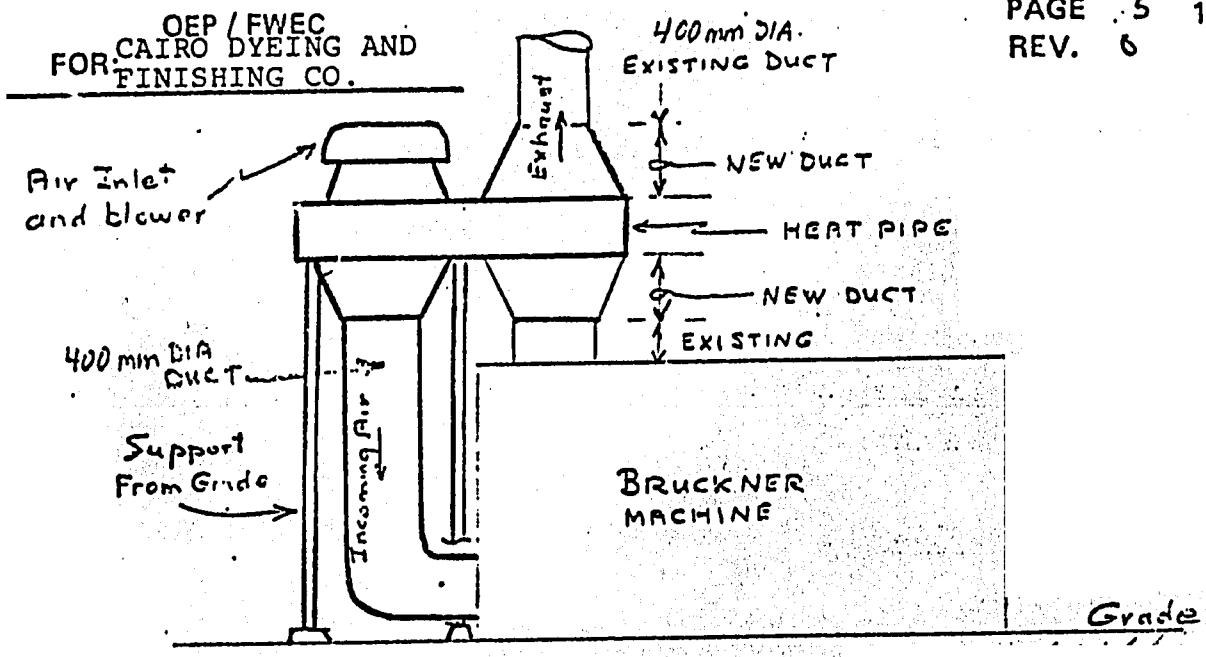

SECTION A-A

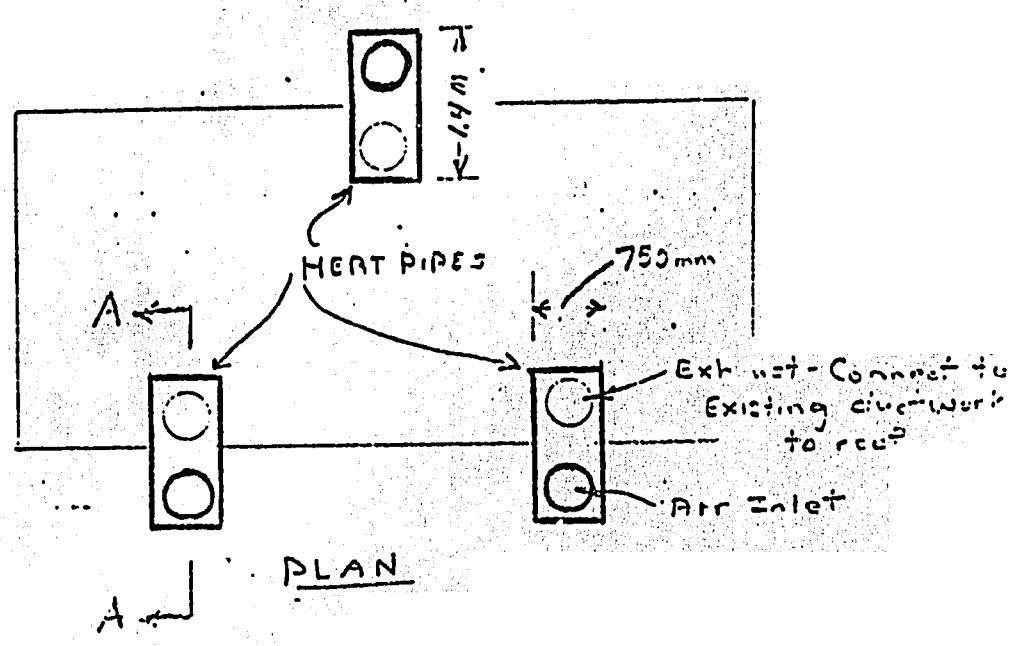

PLAN

LEGEND

EXISTING EQUIPMENT

NEW EQUIPMENT

PROCESS SKETCH
B6-A

ENERGY CONSERVATION OPPORTUNITY

ECO CD-B6

Consider the Use of Heat Pipes to Recover Heat from Hot Air Leaving Dryer Stacks

PLANT CAIRO DYEING AND FINISHING

LOCATION CAIRO, EGYPT

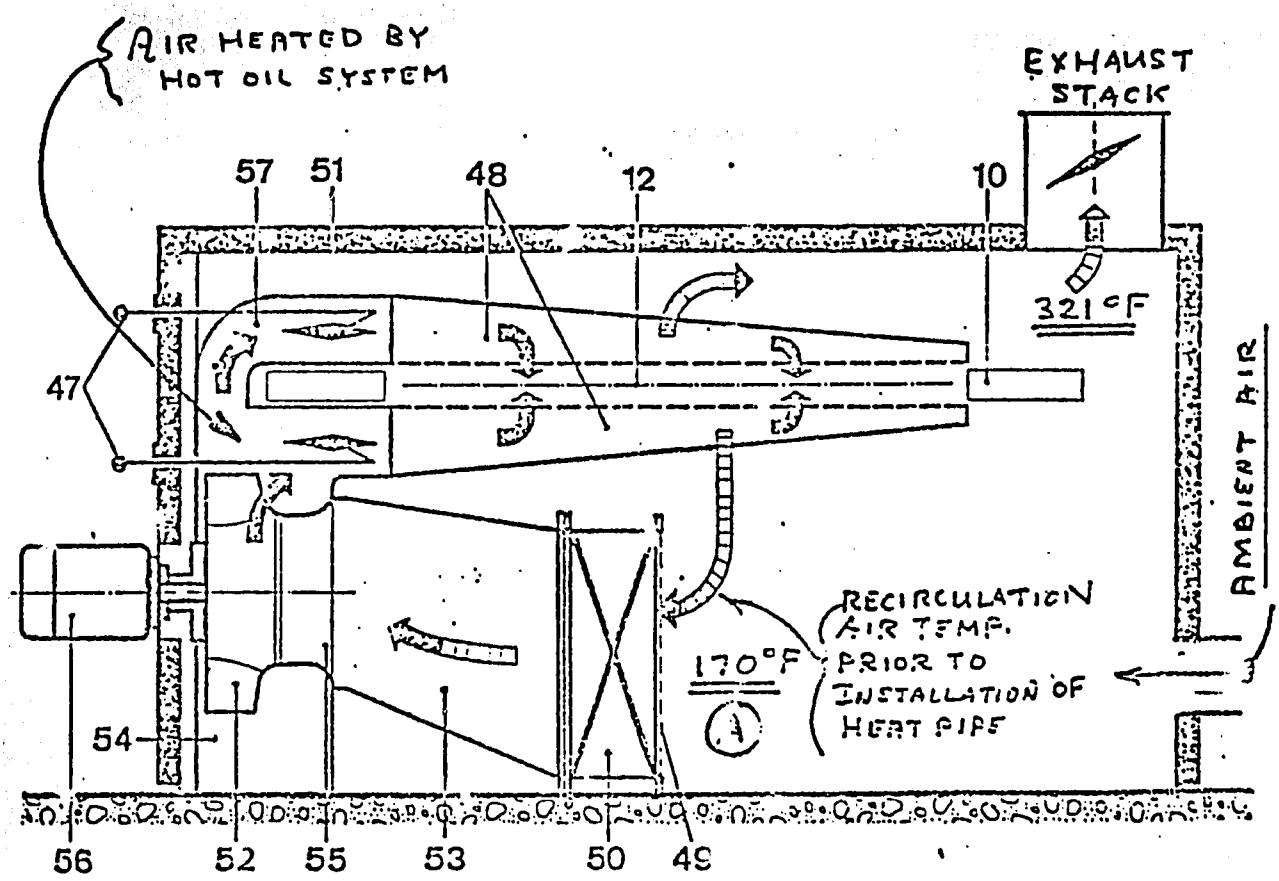

INTERNALS OF FINISHING MACHINE

PROCESS SKETCH
B6·B

ENERGY CONSERVATION OPPORTUNITY

ECO CD · B6

Consider the Use of Heat Pipes to Recover Heat From Hot Air Leaving Dryer Stacks

PLANT CAIRO DYEING AND FINISHING

LOCATION CAIRO EGYPT

LEGEND

EXISTING EQUIPMENT

NEW EQUIPMENT

Q-dot Corporation

Q-Pipe Air to Air

Thermal Recovery Units

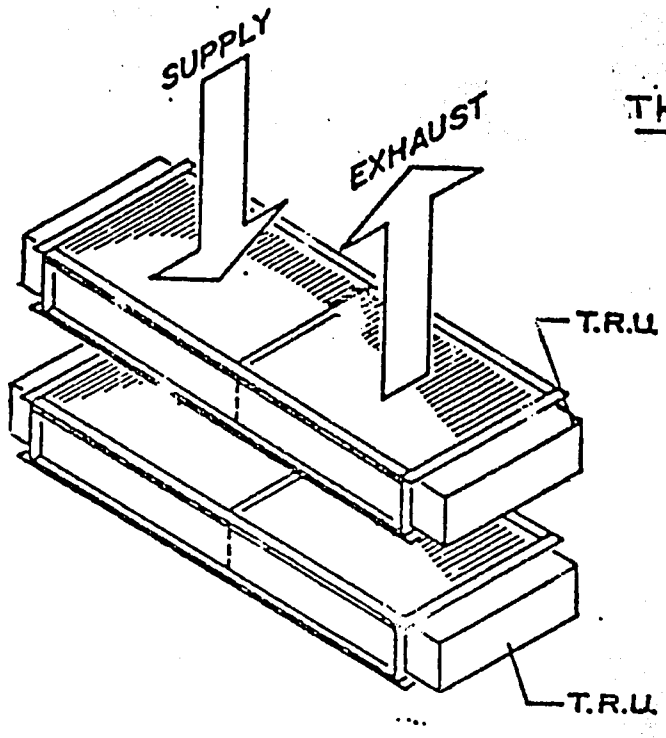

- TYPICAL SERIES UNIT
- HORIZONTAL INSTALLATION
- VERTICAL AIRFLOWS

NOTE: UNITS MAY BE MOUNTED IN SERIES, SIDE BY SIDE, FOR VERTICAL AND HORIZONTAL FLOWS

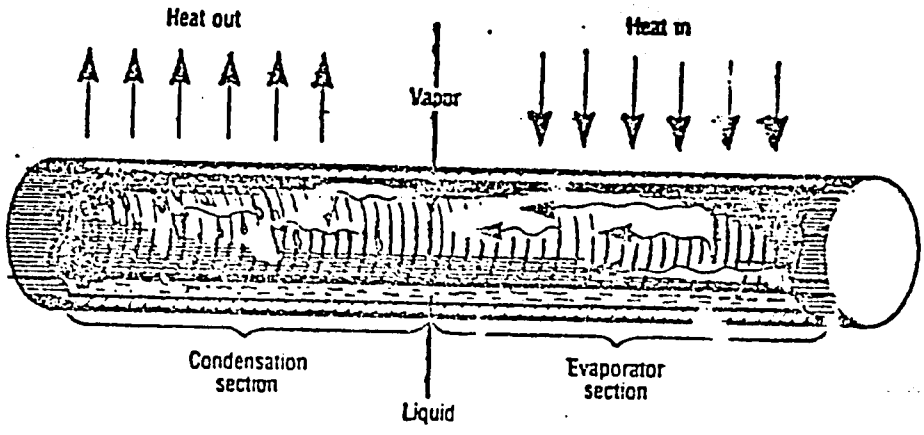

HEAT PIPE SEALED TUBE

LEGEND

EXISTING EQUIPMENT

NEW EQUIPMENT

PROCESS SKETCH

B6 - C

ENERGY CONSERVATION OPPORTUNITY

ECO CD - B6

Consider the Use of Heat Pipes to Recover Heat From Hot Air Leaving Dryer Stacks

PLANT CAIRO DYEING AND FINISHING

LOCATION CAIRO, EGYPT

HEAT RECOVERY FROM HOT WASH WATER TO COLD WASH WATER	Annual Savings LE:	0
	Investment Cost LE:	0
	Payout, Years:	Not Applicable

ECO #CD-B-7

1.0 PURPOSE

The purpose of this ECO is to consider recovering the heat from the hot wash water streams discharged from the washing machines to preheat the incoming cold wash water. This helps conserve energy by lowering the steam requirement for heating the cold wash water.

2.0 PROCESS DESCRIPTION

The energy audit of the Shobra and Fiber factories took place in the second half of February, 1985. During this period it was observed that the hot wash water that is discharged (sent to sewer) from any of the washing machines was not hot enough (approximately 40°C was measured) to warrant any heat recovery. Therefore, this ECO can not be implemented.

3.0 EQUIPMENT LIST/SIZE

No new equipment is required

4.0 PREDICTED ENERGY SAVINGS

Since the hot wash water that is discharged from any of the washing machines was not hot enough to warrant any heat recovery, this ECO can not be implemented.

5.0 INVESTMENT AND ASSOCIATED ECONOMIC EVALUATION

Not applicable.

6.0 CONCLUSIONS

This ECO can not be implemented.

7.0 RECOMMENDATION

This ECO can not be carried out at this time.

ELIMINATE TWO CURRENT USERS OF HIGH PRESSURE STEAM

Annual Savings LE: 0
Investment Cost LE: 8,800
Payout, Years: 0.51
(If done with CD-A-14)

ECO #CD-B-8

1.0 PURPOSE

The purpose of this ECO is to investigate the possible elimination of the only two current users of high pressure steam, both of which are quite small. Specifically they are the steam jet ejector in the sodium hydroxide recovery system and the section of the Thermasol machine that uses high pressure steam, rather than electricity.

2.0 PROCESS DESCRIPTION

The steam jet ejector on the sodium hydroxide recovery system currently uses a small quantity of 16 bar, high pressure steam as the motivating fluid. If the existing ejector were replaced with a larger ejector of a size capable of using 4 bar steam instead, then the use of high pressure steam for this service could be totally eliminated.

The Thermasol machine currently uses a small quantity of 16 bar, high pressure steam. If this machine could be modified, then this could eliminate the need to use high pressure steam for this service. Whether or not this can be done requires further investigation and direct discussions with technical representatives of the vendor of the Thermasol machine. These discussions must take place as soon as possible.

If both of the above could be implemented, then there would be no further need to generate any high pressure

(20 bar) steam. This would allow the existing boilers to operate at a lower pressure, as proposed in ECO #CD-A-14, until such time as the production of electricity by either ECO #CD-B-10 A or B is implemented.

3.0 EQUIPMENT LIST/SIZE

1. One new modified steam jet ejector capable of using 4 bar steam, rather than 16 bar steam in carrying out the existing service. The quantity of 4 bar steam shall be approximately equal to that currently used for the 16 bar operation.

2. Modifications, as will be determined later by the Thermasol machine vendor, and any associated piping and instrumentation.

4.0 PREDICTED ENERGY SAVINGS

There is no additional predicted savings attributable to this ECO other than that already shown for ECO #CD-A-14 which predicts a savings of LE 17,400 annually for being able to run the existing boilers at a lower pressure.

5.0 INVESTMENT AND ASSOCIATED ECONOMIC EVALUATION

The investment to carry out the modifications to the two systems described above is estimated to be LE 8,800. Based upon a predicted annual savings of LE 17,400, the payout would be 6 months.

NOTE: The investment associated with the Thermasol machine must be confirmed by the Thermasol machine vendor.

6.0 CONCLUSIONS

If we implement both ECO #CD-A-14 and B-8, the overall payout would be 6 months.

NOTE: Subject to confirmation of the cost of equipment modification by the vendor.

7.0 RECOMMENDATION

Both ECO #CD-A-14 and B-8 should be implemented.

INSTALL EMERGENCY DIESEL GENERATOR TO MINIMIZE PROBLEM OF REPEATED POWER FAILURES

Annual Savings LE	150,000
Investment Cost	1,300,000
Payout YRS	8.67

ECO #CD-B-9a

1.0 PURPOSE

The purpose of this ECO is to study the possibilities of dealing with the problem of repeated power failures by installing an emergency diesel generator.

2.0 PROCESS DESCRIPTION

This ECO proposes to install one 3000 kw diesel generator unit capable of handling the Shobra, Fiber and boiler plant load when outside power is interrupted. This unit will generate electricity at 380 volts and tie into the 11 kv system through a transformer in the Fiber plant substation which also supplies the boiler plant. It will also be necessary to provide a 11 kv electrical connection to the Shobra plant substation from the Fiber plant substation so that the entire plant can be carried by the diesel generator unit. It should be noted that the electrical tie between the Fiber plant and Shobra plant substations is the subject of ECO #CD-B-9b. Moreover, in ECO #CD-B-9b power from outside the plant only will be available to run the plant. In this ECO #CD-B-9a, additional investment is required, but a more reliable source of emergency power is available. The cost of the electrical tie between the Fiber plant and Shobra plant substations is included in both ECO's CD-B-9a and CD-B-9b.

The 3000 kw diesel generator sizing is specified as a standard size unit which will allow for future plant expansion.

An option of providing only a small capacity emergency generator capable of maintaining the boiler plant on line was considered. However, it is understood from plant personnel that for a typical power failure a very short period of time is required to bring the boiler plant back into operation after power is resumed. Thus, an emergency generator capable of only sustaining the boiler plant would be of limited value.

When a power failure occurs it will be necessary to manually close the 11 kv electrical coupler between the Fiber plant and Shobra plant substations and (manually) electrically unload the system prior to starting the diesel generator. While an automatic system can be specified the additional cost and maintenance associated with this more sophisticated equipment does not appear justified for this plant.

It should be noted that it is not economical to operate the diesel generator when electrical power is available from outside the plant.

3.0 EQUIPMENT LIST/SIZE

The following equipment and materials are required:

1. One (1) diesel generator unit sized for 3000 kw output at 380 volts. Unit to be provided with day tank for diesel fuel and be completely self contained on a common base plate. The unit is sized for 25 percent of current maximum load.

2. One (1) diesel storage tank, 30,000 liters capacity, horizontal drum, 2.4 meter diameter and 6 meter in

length. This tank will contain fuel sufficient to operate the diesel generator for approximately 40 hrs.

3. One (1) motor driven diesel transfer pump to transfer diesel fuel from the storage tank to diesel engine, 1 HP with 15 meters of head.

4. 240 meters of 3x240 mm^2 copper oil filled cable for underground installation. This includes 180 meters of cable to connect the Fiber Plant substation to the Shobra plant substation and 60 meters to connect the diesel generator to the Fiber plant substation.

5. 11 kv coupler, 1000 amp. (tie breaker)

6. 11 kv-1000 amp circuit breaker for diesel generator

7. 11 kv/380 volt 3500 KVA transformer to tie the diesel generator into the 11 kv substation. Connect to the generator with bus bar.

8. Recondition and connect existing 11 kv 1000 amp. circuit breaker in Shobra plant substation.

4.0 PREDICTED ENERGY SAVINGS

During the period in which OEP and Foster Wheeler carried out the preaudit and audit at the Cairo Dyeing and Finishing Company, power failures of various durations were experienced almost every day. If we make a very conservative estimate that by elimination of power failures five percent of the annual cost of energy could be saved, then the yearly cost savings amount to approximately LE 150,000, based on the worldwide price of energy.

5.0 INVESTMENT AND ASSOCIATED ECONOMIC EVALUATION

The total cost to purchase and install the diesel generator and related facilities is LE 1,300,000.

The payout on a worldwide basis is 8.67 years.

6.0 CONCLUSIONS

The installation of a diesel generator to supply emergency power may be considered, however, it has a long payout period of 8.67 years as compared to other alternatives. Also, fuel costs are high for the diesel generator, if it is operated for extended periods of time.

7.0 RECOMMENDATION

Due to the long payout period of this ECO it is recommended that ECO #CD-B9b covering the electrical tie between both outside electrical power sources or ECO #CD-B-10b covering a cogeneration system independent of outside electric power be considered in lieu of this ECO #CD-B-9a. Also ECO CD-B10a which covers a steam turbine generator to supply all electrical requirements of the Fiber and boiler plants should be considered. In this case the elctrical tie between plant substations could also be provided to provide emergency power supply for the Shobra plant. To initiate this emergency source of power, the steam turbine would have to be shut down and all power would be supplied from the Bahteem area substation.

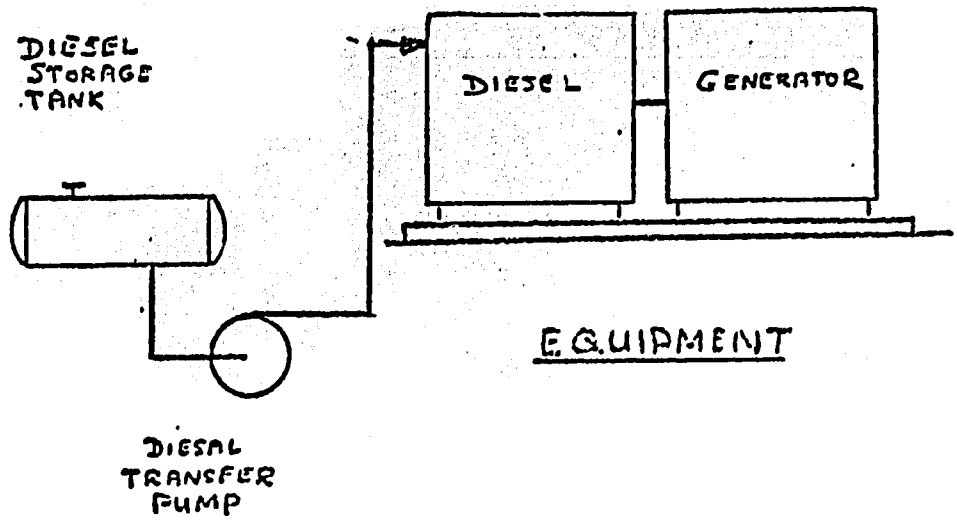

EQUIPMENT

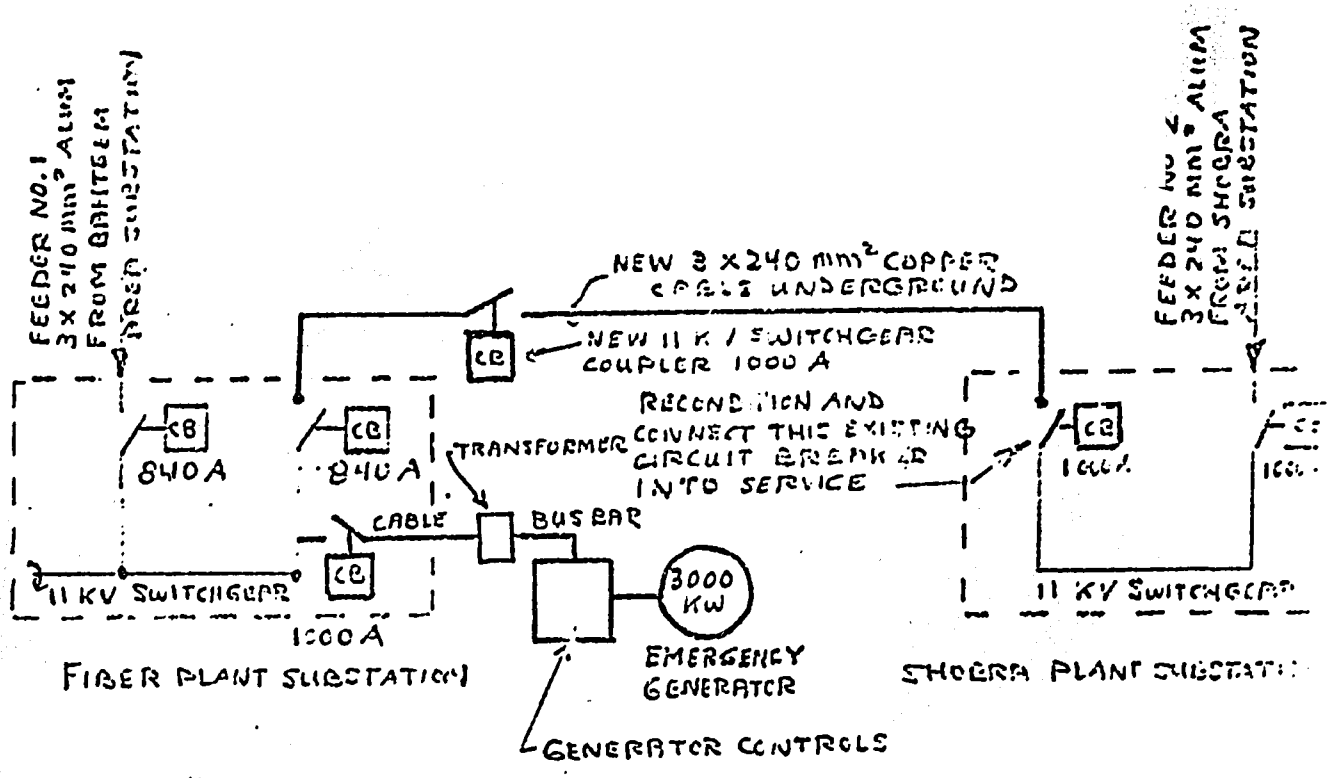

ELECTRICAL

PROCESS SKETCH
Install Emergency Diesel Generator to Minimize Problem of Repeated Power Failures
ENERGY CONSERVATION OPPORTUNITY

ECO CD- 89a

PLANT CAIRO DYEING AND FINISHING

LOCATION CAIRO EGYPT

LEGEND

EXISTING EQUIPMENT
NEW EQUIPMENT

TO DEAL WITH THE PROBLEM OF POWER FAILURES BY OBTAINING POWER FROM TWO POWER STATIONS

Annual Savings LE : 120,000
Investment Cost LE: 72,500
Project - YRS : 0.6 (7.2 months)

ECO #CD-B-9b

1.0 PURPOSE

The purpose of this ECO is to study the possibilities for dealing with the problem of repeated power failures by obtaining power for the entire plant from either of two existing substations located outside the plant boundries.

2.0 PROCESS DESCRIPTION

Currently the Shobra plant receives its power from the Shobra area substation while the Fiber plant receives it power from the Bahteem area substation. Both are located outside the plant limits. There is currently no connection between these power sources within the Cairo Dyeing and Finishing Co. The purpose of this ECO is to provide a connection between the Fiber plant substation and the Shobra plant substation within the boundries of the plant. If electric power is cut off from one area substation all plant power can be supplied from the other area substation with the addition of new connecting cable and new switchgear located within the Cairo Dyeing and Finishing Co.

3.0 EQUIPMENT LIST/SIZE

The cables and switchgear of the existing Fiber plant and Shobra plant substations within the Cairo Dyeing

and Finishing Plant are adequate for the total load of both plants with the following exception. As noted on the attached sketch an existing 1000 amp. circuit breaker within the Shobra plant substation needs to be reconditioned. In addition a new 3 x 240 mm^2 copper underground feeder cable must be run between the two plant substations. The length of this feeder is approximately 180 meters In the feeder a new 11 kv switchgear coupler is required and will be located in one of the plant substations.

4.0 PREDICTED ENERGY SAVINGS

During the period in which OEP and Foster Wheeler carried out the preaudit and audit at the Cairo Dyeing and Finishing Company, power failures of various durations were experienced almost every day. If we make a very conservative estimate that by elimination of power failures four percent of the annual cost of energy could be saved. then the yearly cost savings amount to approximately LE. 120,000. Note that is not quite as high a savings as estimated in ECO #CD-B-9a, since it is possible that both outside power sources may occasionally fail at the same time.

5.0 INVESTMENT AND ASSOCIATED ECONOMIC EVALUATION

The total installed cost for the equipment and materials described above is LE 72,500.

This results in a payout 0.6 years or 7.2 months.

6.0 CONCLUSIONS

Based upon the analysis shown above, if the two plant substations are tied together electrically the payout period indicates this to be a very attractive ECO.

7.0 RECOMMENDATION

This ECO should be implemented immediately.

JOINT ENGINEERING GROUP
OEP / FWEC
FOR: CAIRO DYEING AND FINISHING CO.

REF.
DATE 3/6/85
PAGE 4 188.
REV. 0

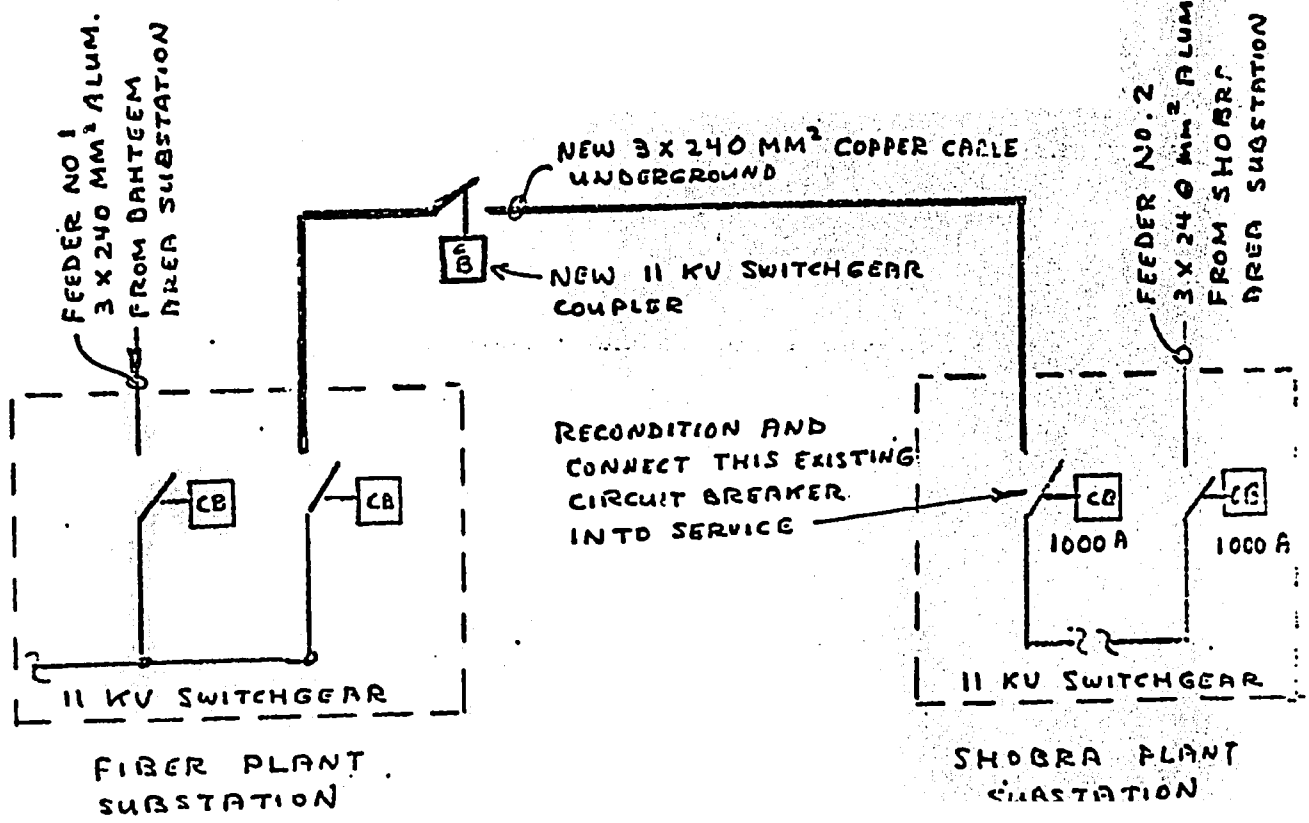

LEGEND

EXISTING EQUIPMENT
NEW EQUIPMENT

PROCESS SKETCH
To Deal With the Problem of Power Failures
by Obtaining Power from Two Power Stations
ENERGY CONSERVATION OPPORTUNITY:

ECO CD - B.9b

PLANT Cairo Dyeing and Finishing Co.

LOCATION CAIRO, EGYPT

GENERATE ELECTRICITY BY LETTING DOWN STEAM THROUGH A POWER RECOVERY TURBINE

Annual Savings LE : 389,000
Investment Cost LE: 1,100,000
Payout YRS : 2.83

ECO #CD-B-10a

1.0 PURPOSE

The purpose of this ECO is to generate electricity by letting down the high pressure steam through a power recovery turbine instead of through pressure regulating valves.

2.0 PROCESS DESCRIPTION

Currently approximately five (5) percent of the steam produced at the boiler header pressure of 19 Bar is utilized at that pressure. The remaining ninety five (95) percent of the steam is reduced in pressure through regulating valves to the 8 Bar pressure level . . in the Shobra plant and the 4 Bar level in the Fiber plant. If this quantity of steam is directed through a steam turbine from the 19 Bar pressure level to both the 8 Bar and 4 Bar pressure levels sufficient electrical energy can be produced to satisfy the requirements of the Fiber plant and the boiler plant. It is therefore recommended that the steam turbine generator electrical output be connected into the Fiber plant substation which also supplies the boiler plant. The current electrical feeder from the Bahteem area substation to the Fiber plan substation can be utilized as required, if the steam turbine generator is out of operation. Calculations of the steam turbine performance were made assuming an inlet flow to the turbine of 19.2 tons/hr of steam at 19 Bar.

Twelve (12) tons/hr of steam are extracted at 8 Bar while the remaining 7.2 tons/hr flow to the turbine exhaust at 4 Bar. Assuming a turbine efficiency of seventy five (75) percent and a generator efficiency of ninety eight (98) percent the generator electrical output would be approximately 900 kw. This electrical output is greater than the average monthly kw consumed for the highest monthly electrical power billing for 1984 which occurred in the month of May. During this month 522,100 KWH were consumed. For a six day, 3 shift week this corresponds to an average hourly rate of 870 kw.

3.0 EQUIPMENT LIST/SIZE

One steam turbine generator set would be installed out-of-doors in the open area next to the boiler plant. This location will minimize the new piping required to tie these facilities into the existing plant piping headers from the boiler plant. Electrically, the generator will be tied to the Fiber plan substation.

The outdoor area should be well lighted and with sufficient access for maintenance. These facilities are shown on the attached sketch.

The following equipment and material are required:

1. One (1) steam turbine generator unit sized for 900 kw output at 11 kv voltage. Inlet steam conditions will be 19 BAR and 300°C with a flow of 19.2 tons/hr. Sufficient safety margin shall be applied to these figures. Extraction of 12 tons/hr. of steam will occur at 8 BAR and the remaining flow will exhaust at 4 BAR. The steam turbine generator will be purchased as a unit with its own controls, lubricating system and generator excitation.

2. 11 kv 1000 amp. circuit breaker for tie to substation.

3. 75 meters of 3 x 240 mm^2 copper oil filled cable for underground installation to tie the generator to the Fiber plant substation.

4. Area lighting.

5. Piping to connect into the existing steam headers.

4.0 PREDICTED ENERGY SAVINGS

Currently, a large quantity of energy is being lost by reducing the pressure of 19 BAR steam through pressure reducing valves to the 8 BAR and 4 BAR pressure levels. The installation of the turbine generator will utilize this energy loss and eliminate the requirement to purchase power for the Fiber plant and the boiler plant.

Based upon the 1984 consumption of electricity in the Fiber plant which was 4,224,300 KWH, if we use the worldwide price of electricity which is 0.092 LE/KWH, this ECO would produce an annual cost savings of LE 389,000

5.0 INVESTMENT AND ASSOCIATED ECONOMIC EVALUATION

The total cost to purchase and install the power recovery turbine and related facilities is LE 1,100,000.

The payout on a worldwide basis is 2.83 years.

6.0 CONCLUSIONS

Presently steam energy is being wasted by passing most of the production of steam from the boiler at

19 Bar through pressure reducing valves to the 8 Bar and 4 Bar pressure levels of the Shobra and Fiber plants. This steam can be utilized through a steam turbine-generator to eliminate the purchase of outside power for the Fiber plant with an attractive price of

7.0 RECOMMENDATION

This ECO should be implemented, unless ECO #CD-B-10b is implemented in its place.

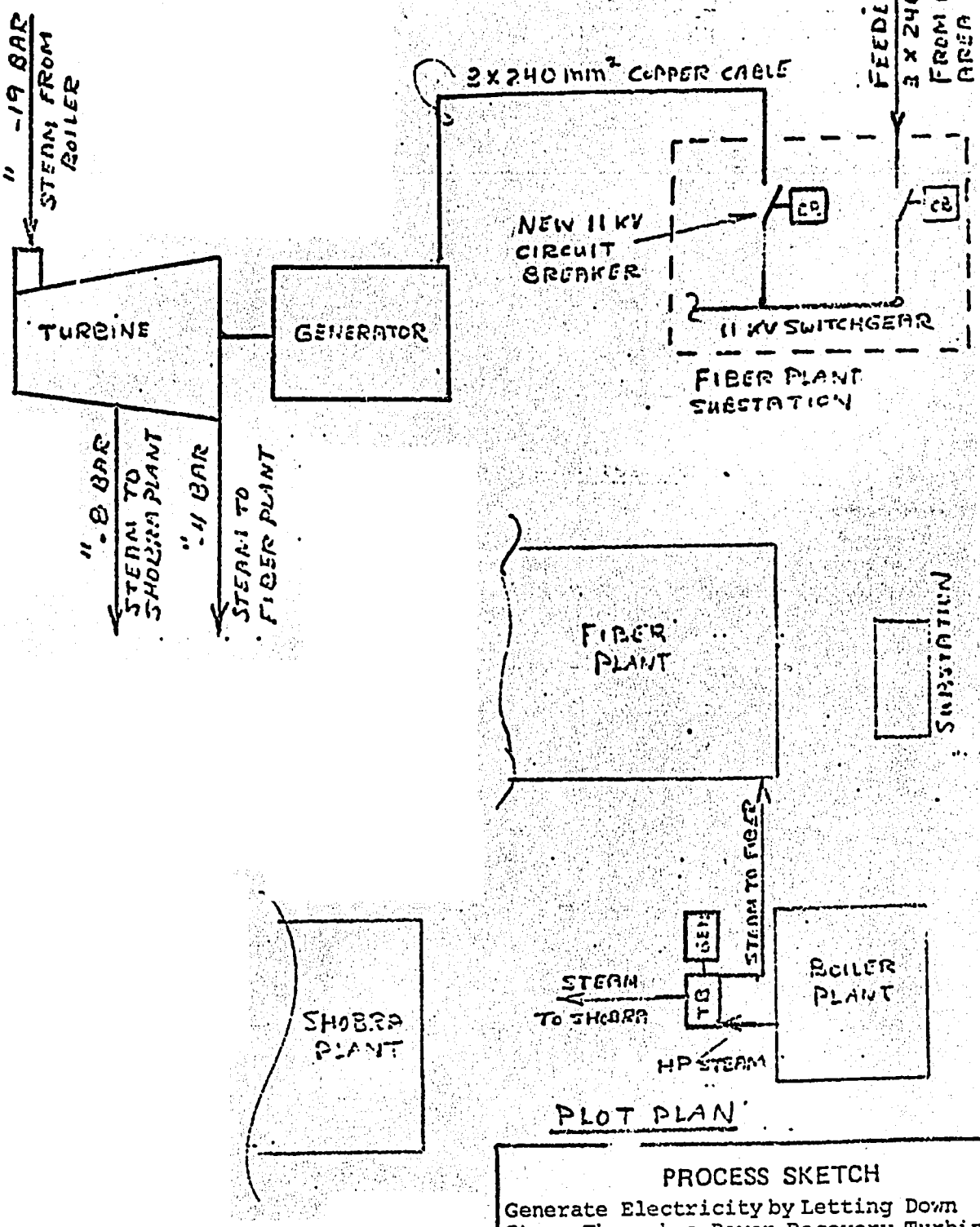

PLOT PLAN

PROCESS SKETCH

Generate Electricity by Letting Down Steam Through a Power Recovery Turbine

ENERGY CONSERVATION OPPORTUNITY

ECO CD-B-10a

PLANT CAIRO DYEING AND FINISHING CO.

LOCATION CAIRO EGYPT

LEGEND

EXISTING EQUIPMENT

NEW EQUIPMENT

INSTALL A COGENERATION SYSTEM TO PRODUCE TOTAL ELECTRICITY AND STEAM REQUIRED

Annual Savings LE : 518,000
Investment Cost LE: 2,538,000
Payout YRS : 4.9

ECO #CD-B-10b

1.0 PURPOSE

The purpose of this ECO is to install a cogeneration system which is able to produce the total electricity and steam required to operate both the Shobra and Fiber plants.

2.0 PROCESS DESCRIPTION

In order to be completely independent from the outside electrical supply which has recently been unreliable, all plant electrical power requirements can be generated by one steam turbine generator operating from the steam produced if the two existing steam boilers are both operating together. When this is done, all steam requirements for the Shobra plant will be supplied at 8 BAR and for the Fiber plant at 4 BAR by extraction flows from the turbine. The turbine will exhaust into a surface condenser operating at 100 mm HG abs. Raw cooling water for the steam condenser will be taken from the Ismailia canal and returned to the canal. A once-through cooling water system complete with pump station will be provided for this purpose. Steam condensate leaving the surface condenser will be pumped by hot well pumps to the existing deaerator where it will be heated by excess steam and will then be returned to the boiler by the existing pumps.

The output of the electrical generator will be connected into present plant electrical system. The electrical

connection between the Shobra plant substation and the Fiber plant substation by underground cable covered by ECO #CD-B-9b must also be included as part of the investment for this ECO. The present connections to the Shobra area substation and the Bahteem area substation must be maintained but the plant circuit breakers to these outside substations are normally open. The outside power is available for boiler plant startup and also when the plant steam turbine generator is not in operation.

Based on the current use of 8 Bar and 4 Bar steam in the Shobra and Fiber plants as shown on sketch B-10bA, the 19 Bar inlet flow required to the turbine to generate 2700 kw is 30 tons/hr assuming a 75 percent turbine efficiency. The 2700 kw output is specified to allow for a 25 percent growth in plant electrical requirements. The turbine discharge flow to the condenser is 10.5 tons/hr. If significant steam savings are made in the Shobra, Fiber and boiler plants by implementation of the recommendations of several of the other ECO's contained in the audit report, then the inlet flow to the turbine in the future for a normal plant kw load may not need to exceed 20 ton/hr steam output of one steam boiler operating at full capacity. Specifically, if a 40% savings can be obtained in the steam usage of the Shobra plant and a 20% savings in the Fiber plant steam usage, which are both consistant with the estimated leakage and insulation losses, then the turbine generator can produce 1700 kw output using the 19.2 ton/hr maximum steam output of one boiler. The 1700 kw output is approximately seven (7) percent greater than the average kw/per hour of purchased electricity based on the records of the total purchased power for the year 1984.

The steam turbine generator should be located completely out-of-doors and adjacent to the boiler plant. Sufficient access must be provided for maintenance and the area should be well lighted.

This ECO is based upon using the existing deaerator, boiler feedwater pumps and water treating facilities and all associated piping including piping at the inlet and outlet of the boilers. Cairo Dyeing and Finishing Co. personnel have advised that this equipment and piping is adequately sized for operation of both boilers simultaneously. We understand however, the boilers cannot presently operate below 17 tons/hr each due to lack of automatic controls. The necessary controls are included in this ECO.

3.0 EQUIPMENT LIST/SIZE

The following new equipment and materials must be furnished and installed.

1. One 2700 kw steam turbine generator. Inlet flow to be at 20 BAR and 300°C with extraction points at 8 BAR for 12 tons/hr of steam and at 4 BAR for 7.2 tons/hr of steam. Exhaust will be directed downward to a surface condenser operating at 100mm HG. absolute. Electrical generator output to be at 11 kv. Excitation is to be provided for the generator. All necessary lubrication system components and turbine generator controls are to be included.

2. One 930 M^2 surface condenser sized for 11 ton/hr of steam at 100mm HG abs. Provide steam ejector evacuation equipment. The condenser will be designed for a 11°C rise (32°C to 43°C) on the

cooling water side. The condenser will be flanged directly to the downward turbine exhaust.

3. Two vertical centrifugal hotwell pumps each 5 HP, 16.5 M^3/hr, 2.75 BAR.

4. Two vertical circulating water pumps located in a pump station at the Ismalia canal. Each pump 75 HP, 850 M^3/hr and 2.0 BAR head.

5. Two traveling screens at the inlet to the circulating water pump station to prevent debris from entering the circulating water pump suction.

6. One 11 kv 1000 amp. circuit breaker for the turbine generator.

7. One 11 kv coupler, 1000 amp (tie breaker).

8. 240 meters of 3 x 240 mm^2 copper filled cable for underground installation. This includes 180 meters of cable to connect the Fiber plant substation to the Shobra plant substation and 60 meters to connect the turbine generator to the Fiber plant substation.

9. Recondition and connect existing 11 kv 1000 amp. circuit breaker in Shobra plant substation.

10. Automatic boiler controls for both existing boilers.

<u>Note</u>: Items 7 and 9 plus 180 meters of cable in item 8 above are also included as part of ECO #CD-B-9b. If that ECO is implemented first, the investment associated with items 7 and 9 plus seventy five (75) percent of item 8 above need no longer be included.

4.0 PREDICTED ENERGY SAVINGS

Energy savings will result from cogeneration and the elimination of the purchase of all power. However, at the current level of plant steam consumption, it will be necessary to run the second boiler at all times to generate sufficient steam to cause the turbine generator to meet the plant's total electrical requirements.

Based upon the 1984 consumption of electricity in the Shobra, Fiber and boiler plants, which was 11,200,000 KWH, the total cost of electricity for the year is reported as LE 1,026,000, based on a worldwide price of 0.092 LE/KWH. This amount will be saved annually if cogeneration is implemented, however there are certain new expenses associated with cogeneration which must be taken into account.

Based upon the total purchased power for 1984, the plant utilized an average of 1590 kw per hour. Assuming that five percent of the time the plants were shutdown for electrical failure, the average rate would be 1670 KWH per hour if the failures had not occured. To generate this quantity of electricity it would be necessary to operate both boilers at 62% capacity to generate 23.9 ton/hr of steam. As noted in ECO # CD-B-10a 19 ton/hr of steam is required to meet the total steam requirements of the Shobra, Fiber and boiler plants while generating 900 kw and this amount should not be debited to the ECO. The balance of the steam required or 4.9 tons/hr is necessary to generate a total of 1670 kw. At a worldwide cost of LE 14.63/metric ton, the 4.9 tons/hr of steam results in an energy cost of LE 508,000 annually.

Thus the net energy savings is LE 1,026 000 less LE 508,000 or LE 518,000 annually.

As noted in paragraph 2.0 above, if the steam leakag and insulation is repaired in the Shobra, Fiber and boiler plants, the 4.9 tons/hr of steam described above will not be required. Therefore, the net energy savings will increase from LE 518,000 to LE 1,026,000.

5.0 INVESTMENT AND ASSOCIATED ECONOMIC EVALUATION

The total investment cost to purchase and install the equipment and materials described above is LE 2,538,000

The payout on a worldwide basis is 4.9 years for an energy savings of LE 518,000.

If the steam leakage and insulation is repaired, the payout on a worldwide basis is 2.5 years.

6.0 CONCLUSIONS

While this ECO has a payout of 4.9 years without considering the implementation of other ECO's we strongly recommend that the steam leakage and insulation, (ECO's #CD-A-2 and A-5) be repaired as soon as possible and prior to implementation of this ECO. On this basis the payout of 2.5 years is attractive considering the elimination of the plants' dependency on electrical power supplied from outside the plant.

.0 RECOMMENDATION

We recommend that this ECO be implemented after ECO's #CD-A-2 and CD-A-5 are completed.

JOINT ENGINEERING GROUP
OEP / FWEC
FOR: CAIRO DYEING AND FINISHING CO.

REF.
DATE 3/6/85
PAGE 7 200.
REV. 0

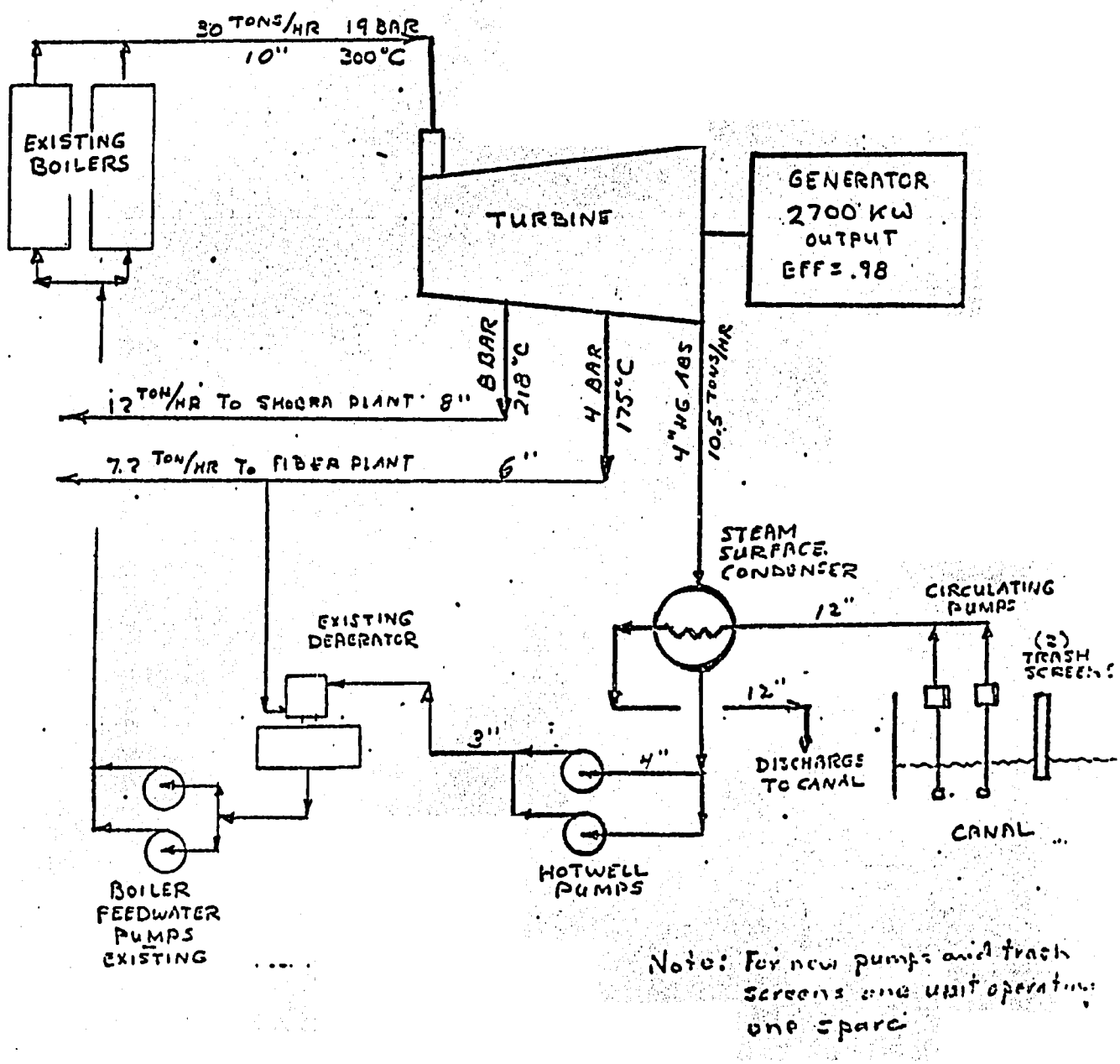

Note: For new pumps and trash screens one unit operating one spare

PROCESS SKETCH
B-10b-A

ENERGY CONSERVATION OPPORTUNITY

ECO CD-B-10b

tall a Cogeneration System to Produce
al Electricity and Steam Required

PLANT CAIRO DYEING AND FINISHING CO.

LOCATION CAIRO, EGYPT

LEGEND

EXISTING EQUIPMENT
NEW EQUIPMENT

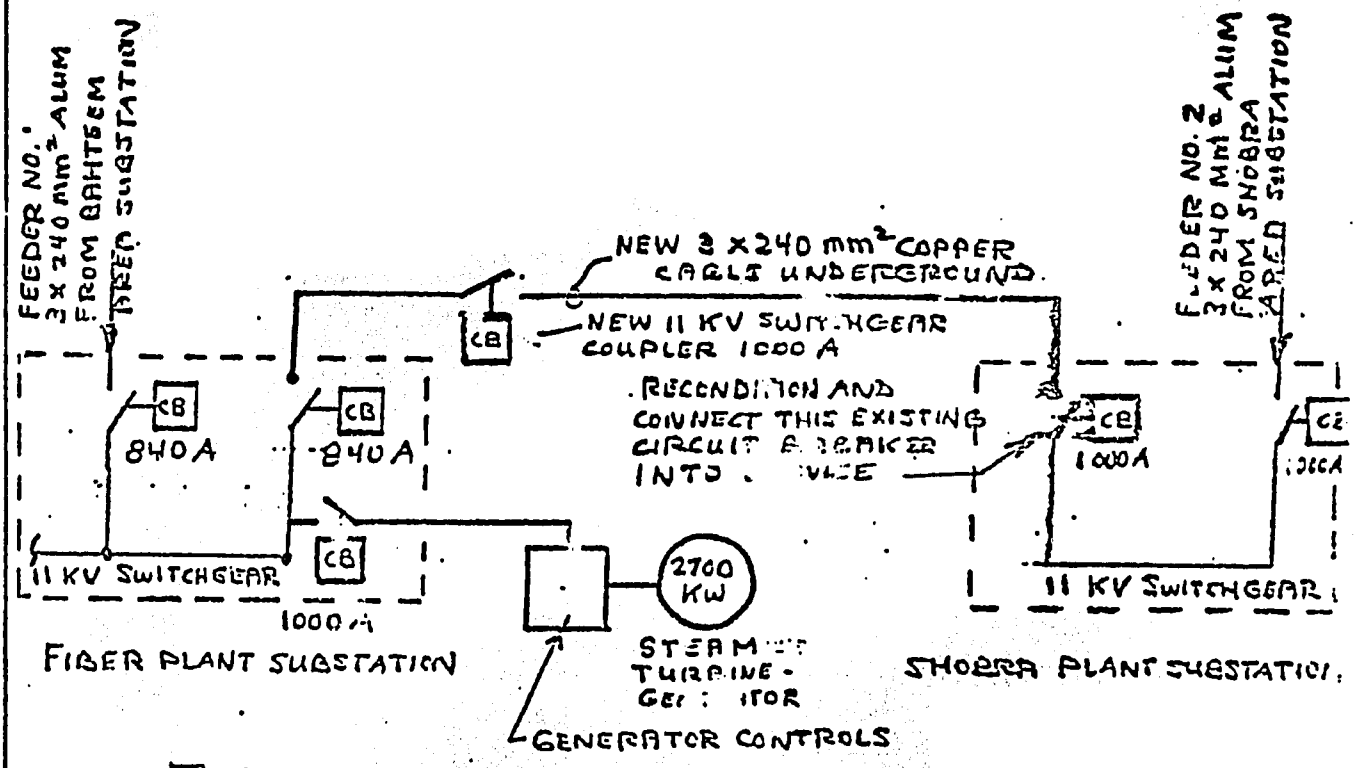

ELECTRICAL

LEGEND

EXISTING EQUIPMENT

NEW EQUIPMENT

PROCESS SKETCH
B-10b-B

ENERGY CONSERVATION OPPORTUNITY

ECO CD-B-10b

Install a Cogeneration System to Produce Total Electricity and Steam Required

PLANT CAIRO DYEING AND FINISHING

LOCATION CAIRO, EGYPT

WATER RECOVERY SYSTEM

Annual Savings LE : 307,300
Investment Cost LE: 50,200
Payout, YRS : 0.16 (58 days)

ECO #CD-B-11

1.0 PURPOSE

The purpose of this ECO is to recover the treated hot/cold water for reuse to help conserve energy by minimizing pumping cost, and the steam required for heating the water.

2.0 PROCESS DESCRIPTION

The 40 ton/hr cooling water return (softened water) from the NaOH recovery unit, which is at a temperature of 60°C is presently being sent to the sewer. It is now proposed to pump this water for reuse to the washing machines in the Fiber Factory. The water recovery system is shown in the sketches and tabulations which follow.

The hot water from the washing machines has chemical contamination and can not be reused.

3.0 EQUIPMENT LIST/SIZE

The equipment required is listed below and shown in the sketch included at the end of this ECO:

- PUMPS

Item No.	:	P-3 and P-4
Service	:	Cooling water return pump and spare
Capacity	:	58.5 M^3/hr
Head	:	23 meters
Motor HP	:	7.5
Type	:	Centrifugal
Material	:	CS

- ESTIMATED PIPING LENGTH

1. TOTAL PUMP SUCTION PIPING

Line size inches	Estimated length, meters
4	15

2. TOTAL PUMP DISCHARGE PIPING

Line size inches	Estimated length, meters
4	90

- INSTRUMENTS

1. One flow indicator in 4" water line. Normal flowrate = 40 M^3/hr

2. One 4" globe valve.

4.0 PREDICTED ENERGY SAVINGS

If the cooling water return (softened water) from the NaOH recovery unit is utilized in the washing machines of the Fiber factory, the predicted energy savings (based on 7080 operating hours per year) will be as follows:

	Energy Savings Corresponding to	World Price	Savings LE/year
STEAM	14,000 MT/year	14.636 LE/mt	204,900
SOFTENED WATER	45.98×10^6 Imp. gal/year	2.3 LE/1000 Imp. gal.	105,800
POWER	- 36,820 KWH/year	0.092 LE/KWH	- 3,390
		TOTAL	307,310

5.0 INVESTMENT AND ASSOCIATED ECONOMIC EVALUATION

The total investment cost to purchase and install the equipment and materials described above is LE 50,200.

The payout on a worldwide basis is 0.16 years or 58 days for an annual energy savings of LE 307,300.

6.0 CONCLUSIONS

This ECO has an attractive payout of 58 days. We strongly recommend that the cooling water return from the NaOH recovery unit be utilized in the washing machines of the Fiber Factory.

7.0 RECOMMENDATION

This ECO should be implemented without any delay.

JOINT ENGINEERING GROUP
OEP / FWEC
FOR: CAIRO DYEING AND FINISHING CO.

REF.
DATE
PAGE 205.
REV.

WATER RECOVERY SYSTEM

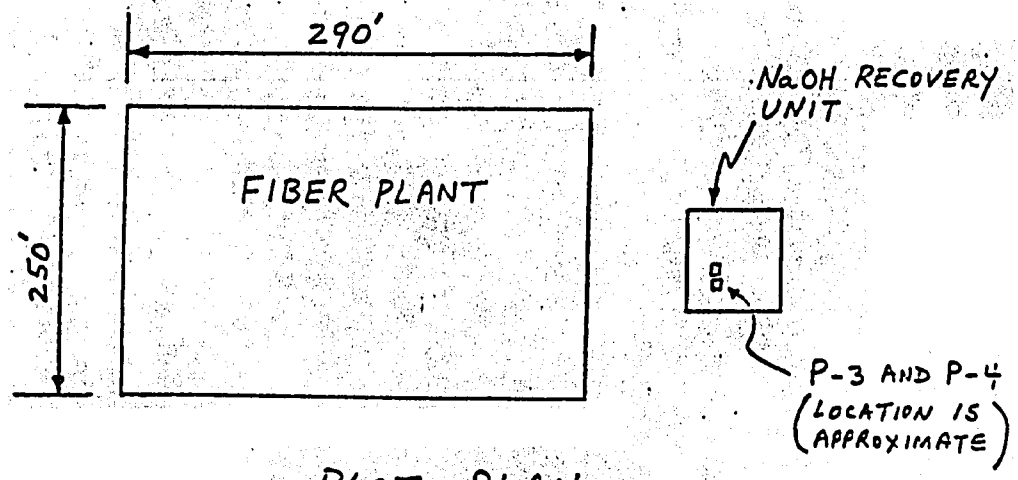

PLOT PLAN

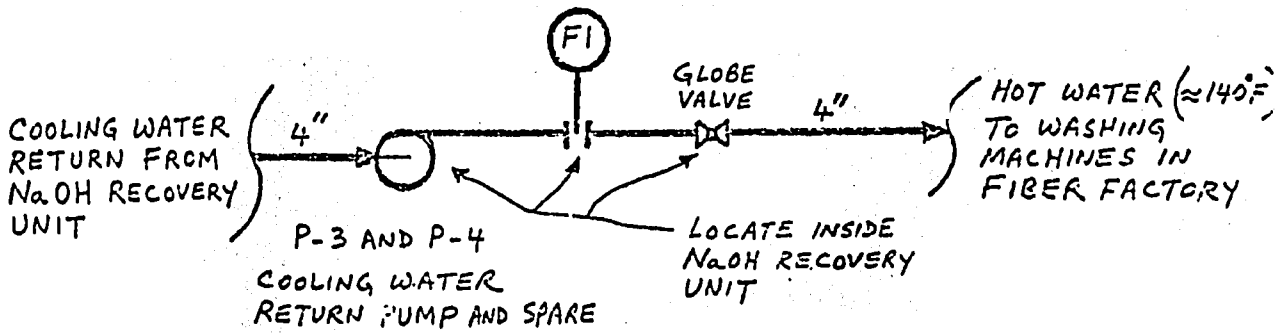

LEGEND

EXISTING EQUIPMENT
NEW EQUIPMENT

PROCESS SKETCH
Water Recovery System
ENERGY CONSERVATION OPPORTUNITY
ECO CD-B-11

PLANT UTILITIES/FIBER FACTORY
LOCATION CAIRO, EGYPT

SKETCH 1 OF 1

ORGANIZATION for
ENERGY
PLANNING

جهاز تخطيط الطاقة

AUDIT

FINAL REPORT

VOLUME 2 OF 2 (APPENDIX)

BY

JOINT ENGINEERING GROUP

* ORGANIZATION FOR ENERGY PLANNING (OEP)
* CAIRO DYEING AND FINISHING COMPANY
* FOSTER WHEELER ENERGY CORPORATION (FWEC-USA)

April 4, 1985

O.E.P. تلكس دولى ٢٣٤٠٤ تليفون : ٩٢٦٣٤٢ أو ٩٢٧١٨٩ ١ شارع عائشة التيمورية ـ جاردن سيتى ـ القاهرة
1, Aisha El-Taymorya — Garden City, Cairo Phone 926342 or 927189 Telex. 23404 O.E.P.

APPENDIX "A"

BASIC ENGINEERING DATA

Basic Engineering Data:

The Basic Engineering Data (B.E.D. Sheets) which will be used during the audit and subsequent design of the various ECO's is given in the pages which follow:

The source of the data listed below is as follows:

Utility Cost (Paragraph 3.0)

Fuels - Per Egyptian General Petroleum Corporation.

Electric Power - From Organization for Energy Planning (OEP).

Steam - Developed by FWEC from data furnished by Chemical Process Economics Center for Stanford Research Institute and modified to reflect the energy cost used in this report.

Water - Developed by FWEC from data furnished by Chemical Process Economics Center for Stanford Research Institute and modified to reflect the energy cost used in this report.

Meteorological Data (Paragraph 4.0)

As developed from data provided by Egyptian Meteorological Authority for a five year period (1978 through 1982).

Minimum Dry Bulb Temperature is average of mean minimum temperatures.

Design Dry Bulb Temperature is average of mean maximum temperatures.

Design Wet Bulb Temperature is determined from Psychrometric Chart using an average relative humidity of 64 percent.

Utility Information (Paragraph 5.0)

Fuel oil specifications - Per Egyptian General Petroleum Corporation.

Sular specifications - Per Egyptian General Petroleum Corporation.

Rules from Electric Billing

Specified by contract between the plants and the Electric Authority.

Organization for Energy Planning

REF. Energy Conservatio:
DATE Jan., 1985
PAGE 1
Revised Feb. 28, 1985
Revised April 4, 1985

ENERGY CONSERVATION PROJECTS

BASIC ENGINEERING DATA

PLANT CAIRO DYEING AND FINISHING CO.

1.0 General:

This form defines the basic engineering data which will provide the technical and economic basis for the evaluation of energy consumption opportunities (ECO'S) for the above named industrial complex.

2.0 Economic Guidelines:

2.1 Operating Time:

2.1.1. Number of operating days per year 295
2.1.2 Number of shifts per day 3 shifts, 6 days per week
2.1.3 Normalized number of operating hours per year 7,080

2.2 Economic Evaluation Basis:

2.2.1 Payback priority list, simple basis YES
2.2.2 Discounted cash flow NO
Taxes
Inflation
Interest
Required R.O.I. (if known)

3.0 Utility Cost:

Utility	Units	Public Sector Domestic Cost (LE)	World Cost (LE)
Fuels			
Mazout (#6)	LE/met. ton	7.500	241.8 (1)
Sular	LE/met. ton	36.000	325.000 (1)
Electric Power (3)	LE/kwh	0.010	0.092 (5)
Steam (2)			
(4) High Pressure	LE/met. ton	0.516	16.632
(4) Medium Pressure	LE/met. ton	0.454	14.636
(4) Low Pressure	LE/met. ton	0.384	12.308
Water			
Raw	LE/1000 Imp. gal	0.086	0.80
Cooling (circulated)	LE/1000 Imp. gal	0.007	.067

Notes
(1) Based on value FOB*Italy (Feb. 21, 1985) with a conversion of 1.3 LE to 1 USD
(2) Note HP. 35 Bar or more
MP. 10 to 35 Bar
LP. .3 to 10 Bar
(3) High voltage (11,000 volts)
(4) The cost of condensate or boiler feed water is 10 percent of the steam cost.
(5) Marginal cost for electricity with fuel components valued at world wide price.
*"Free on Board"

4.0 Meteorological Data:

4.1 Meteorological Data: (Cairo Area)

Temperatures:

Minimum Dry Bulb	6°C
Design Dry Bulb	34°C
Design Wet Bulb	28°C

Note: For insulation calculations use dry bulb temperature at 20°C.

Wind Velocity and Direction: 0-15 km/hr Random Direction

Winterization Area Classification: None

Allowance for Earthquake Forces: None

Rainfall: Less than 10 cm/yr.

Design Humidity (relative) = 64% (34°C/28°C)

5.0 Utility Information:

5.1 Fuel Oil (mazout #6):

Temperature (pour point), °F	100.0
Specific Gravity @ 60°F/60°F	0.99
Viscosity, Redwood No.1 @ 100°F	2000.0
Viscosity, Redwood No. 1 @ 210°F	115
Sulfur, % by wt.	2.5
Heating Value, HHV, BTU/metric ton	18,646,000

5.2 Light Gas Oil (Sular)

Specific Gravity @ 15/4°C	0.82
Viscosity, Redwood No. 1 @ 100°F	30
Sulfur, % by wt.	1.5
Heating Value, HHV, BTU/metric ton	2,340,000
Flash Point Penske-Martens closed, °C	55

6.0 Rules for Electric Billing

The following rules for electric billing (or application of rates) will apply to economic analysis of ECO'S which relate in depth to the cost of power. These rules assume a consumption at more than 625 KVA (500 kw), at a voltage level of 380 volts, for industrial uses other than limited lighting.

6.1 Demand Factor

The demand factor envisions a base load for this complex, which is ___*_____ kw, and allows excursions beyond the base load for a period not to exceed zero minutes per excursion. If this excursion limit is exceeded, the electric bill is calculated on the basis of this maximum load condition for the entire billing year (5% grace is allowed).

6.2 Power Factor

The target power factor for all users is 1.0. Two price variations exist, however, based on an acceptable power factor of 0.8. These are respectively, an incentive, and a penalty, as well as a shutdown clause.

6.2.1. Power Factor Incentive:

An incentive of a discount on the electric bill is offered, at a rate of 0.5% discount (factor of 0.005) on each percent of power factor greater than 0.8 (i.e. a maximum of 20 steps at 1% to achieve a P.F. = 1.0

6.2.2. Power Factor Penalty:

A penalty of an increase on the electric bill is mandated, at a rate of 0.5% increase (factor of 0.005) on each percent of power factor less than 0.8 (i.e. a penalty of 10 x 0.5% or 5% for a PF equal to 0.7).

Additionally, if the power factor is 0.6 or less, a second 0.5% increase per 1% of P.F. is additive, for a total penalty of 1% of P.F. below 0.6.

6.2.3. Shutdown for Power Factor

The billing system provides a clause to shutdown any user who has a power factor of less than 0.6, who does not correct this adverse power factor within 3 months.

6.3 Billing Rates:

The following rates are based upon a yearly billing basis, and normally apply to a fiscal year from July to June.

The bill is based upon the sum of several elements, which consist of three major categories, thereafter ratioed up or down by the power factor rate adjustment.

---

* 960 kw Shobra plant
2500 kw Fiber plant

The three major elements are:

a) constant annual charge, based on the maximum stated demand, and priced at 7.756 LE/year for each kw.

b) a cost per KWH consumed, on a sliding scale, in accord with table #1.

c) taxes, which are the sum of:

- o broadcast tax, @ 0.001 LE per KWH for lighting*.
- o consumption tax, @ 0.005 LE per KWH for lighting*.
- o power tax, @ 0.0001 LE per KWH for 90% of KWH.

See Table #1 on next page.

7.0 CURRENCY CONVERSION RATE

The conversion of U.S. dollars to Egyptian pounds (L.E.) is accomplished by multiplication of USD by 1.3 to obtain LE.

---

assumed to be 10% of total.

KWH Rate Table #1

Range	1 Time (hours)	2 Maximum Rate (KW)	3 Total Power (measured) (KWH)/year	4 Total Power (calculated) (KWH)	5 Power Remaining (KWH)	6 Rate (LE)	7 Cost (LE)
1	1000	( )	( )	_____	_____	0.013942	_____
2	500	"	_____	_____	_____	0.013114	_____
3	1000	"	_____	_____	_____	0.011458	_____
4	1000	"	_____	_____	_____	0.009802	_____
5	1500	"	_____	_____	_____	0.007456	_____
6	*	-------	_____	_____	_____	0.006352	_____
						TOTAL	_____

Notes:

1. column 1 represents hours at the stated demand rate, i.e. first 1000 hours, next 500 hours, etc. Range 6 does not have an entry, since the power at rate range 6 is found by difference.

2. column 2 is the maximum rate, as determined from short term maximum during the year (not applicable to range 6).

3. column 3 is measured power at the meter, in KWH, for the billing year (enter at range 1 position only).

4. column 4 is total power calculated, as the product of column 1 & 2.

5. column 5 is remaining power, as column 3 - column 4 for range 1, and thereafter the entry for the previous range minus the entry in column 4 for the current range, i.e. power in KWH not yet accounted for.

   The calculation is repeated by range until the power remaining is less than the power calculated.

6. column 7 is the product of columns 4 & 6, until such time as the power remaining is less than the power calculated. When this occurs, column 7 is the product of the power remaining (column 5) and column 6. Note that this occurs always at range 6, if not before.

---

* (Maximum hours which could exist in column one would be: 365 x 24 - 5,000 = 3,760 hours).

APPENDIX "B"
NEW DATA COLLECTED

PORTABLE INSTRUMENTS

The audit team was provided with a complete set of various portable instruments to permit field measurement of data parameters, as necessary to carry out the engineering calculations associated with the audit.

These instruments, as described by the attached list, were carefully selected to provide a well rounded set, able to measure those parameters which are basic to a broad range of audit types.

The instruments will permit any conceivable audit, to a significant depth, to include the following typical plant systems:

- Combustion devices, including boilers, furnaces, kilns, heaters, ovens etc.
- Steam systems, including traps
- Electrical systems, with demand and power factor
- Heating, ventilating, and air conditioning
- Lighting

Where required, instruments are multiple range, and specified to be compatable with the power sources found in Egypt.

Each instrument is provided with a calibration record card and a stick-on label, physically attached to the instrument, to show calibration period data.

Each instrument was rechecked, after receipt in Egypt, using standard calibration techniques, to insure that no damage had occurred in transit.

PORTABLE INSTRUMENTS USED BY THE ENERGY AUDIT TEAM

REF.#	MANUFACTURERS NAME INSTRUMENT TYPE	SERIAL NO.	QUANTITY	PART NO.	BRIEF DESCRIPTION
1	Thermo Electric Temperature Indicator	110984-1-11	1	351153 000000	Digital temperature device,w/accessories
2	Transcat Thermometer 0/220F	None	1	PT1/220	Temperature Indicator
3	" " 40/160F	None	1	PJ1/160	"
4	" " Glass Tube	None	1	6907T/300	Mercury Thermometer
5	MC Products Infrared Temperature	011270	1	LT-100	Hand held digital temperature measuring device
6	Bacharach Boiler Test Kit	10-8001	1	10-8001	Kit of materials to test boiler efficiency
7	Bacharach Sample Test Cooler	None	1	11-7046	Accessory to Boiler Test Kit
8	MC Products Combustion Analyzer	10500	1	M-50	Digital Combustion Gas Analyzer
9	Davis Instrument Anemometer	508788	1	A/2-4"	Propeller Driven Air Flow Indicator
10	Dwyer Instrument Air Velocity Meter	8449	1	400-10	Red Oil manometer and accessories
11	Taylor Instrument Sling Psychrometer	1330	1	TA 16301	Device to measure relative humidity
12	Sonic Instrument Stethoscope	407620	1	Sonic 3000	Ultrasonic Device to locate/measure sound levels with accessories
13	Cole-Palmer Stopwatch	None	1	R-8672-20	Measuring device to measu seconds
14	YEW Tachometer	03012M	1	3632-00	Optical device with digital readout to measure rotational speed

REF.#	MANUFACTURERS NAME INSTRUMENT TYPE	SERIAL NO.	QUANTITY	PART NO.	BRIEF DESCRIPTION
15	General Electric Lightmeter	154	1	214	Device to measure light output
16	Epic Inc. Power Factor Meter	45172	1	COS 051	Meter to indicate power factor
17	Epic Inc. KW Meter	45172A	1	KW 4802	Meter to indicate power in kilowatts
18	Transcat Ammeter	140903	1	7405-E50	Meter to indicate line current in amperes
19	Fluke Multitest Meter	3500087	1	8021B	Meter for various electrical measurements
20	Transcat Recording Ammeter	36535AE 36536AE 36532AE 36534AE	4	781CE	Recording meter to indicate current consumption in amperes with accessories

ELECTRICAL FIELD MEASUREMENTS

FOSTER WHEELER ENERGY CORPORATION 110 SOUTH ORANGE AVE., LIVINGSTON, N.J.

BY ..... DATE ..... SUBJECT Plant Measurements 26-2-85 SHEET NO. 1 OF 1

CHKD. BY ..... DATE Water Treating 380 V One Line JOB NO. .....

UNIT NO.	F.L.C. L1	F.L.C. L2	F.L.C. L3	KW L1	KW L2	KW L3	P.F.	REMARKS
Water Well Pump No.3 37 KW	72.9	73	73.7	32.4			.84	Voltage L1 L2 L3 370 358 362
Soft Water Pump 75 H.P 55 KW	123	115	124	75			.84	

Legend

F.L.C. - Full Load Current

KW - Kilowatt

P.F. - Power factor

L_1 - Single Wire identification on a multi line circuit

L_2, L_3 - As L_1

KVAR - Kilovolt Amperes Reactive

O.C. - Operating Current

O.V. - Operating Voltage

O.KW - Operating KW

FORM 1285-147

FOSTER WHEELER ENERGY CORPORATION 110 SOUTH ORANGE AVE., LIVINGSTON, N.J.

BY ..... DATE ..... SUBJECT Plant Measurements 2-26-85 SHEET NO. 1 OF 1

CHKD. BY ..... DATE Boiler Area 380 v. One Line JOB NO. -

UNIT NO.	F.L.C. L1	F.L.C. L2	F.L.C. L3	KW L1	KW L2	KW L3	P.F.
Boiler Forced Draft Fan No. 1 67 Kw.	115	116	119	45.8			.8
Deaerator Pump No. 2 75 HP. 55 Kw.	100	100	102	56.8			.93

FORM C65L47

FOSTER WHEELER ENERGY CORPORATION 110 SOUTH ORANGE AVE., LIVINGSTON, N.J

BY..... DATE..... SUBJECT Water Treating Area, Fiber Plant SHEET NO. 1 OF 1

CHKD. BY..... DATE..... JOB NO.....

CORRECT POWER FACTOR TO

Item No.	Motor KW	Motor F.L.C	Name Plate P.F	Operating K.W	Operating P.F	Multiplier	Required Kvar	
Water Well Pumps								
P1- No. 1 (Operating)	75 HP 55 KW	101A.	0.9					
P2- No. 2 (Spare,	37	69.5A	0.9					
P3- No. 3 (Spare)	37	69.5A	0.9					
Air Pump Room								
Air Pump P-17 (Feeds air to Filters	13.5 HP	27 A.	0.85					
Air Pump P-18 (Feed air to water Tank)	5.5	11 A.						
Deaerator Water Pumps								
No. 1 P-4	22	0.9						
No. 2 P-5	15	0.9						
No. 3 P-6	15	0.9						
Filter Pump	7.5	15.5A	0.86					
Acid Pumps								
No. 1 P-12	2.2	5.2A						
No. 2 P-13	2.2	5.2A						
Soft Water Pumps								
No. 1 P-7	75 H.P	141 A	0.86					
No. 2 P-8	75 H.P	141 A	0.86					
Chemical Feed Pumps								
No. 1 P-14	1.8							
No. 2 P-15	1.8							
No. 3 P-16	1.8							
Chemical Mixers								
M1 - No. 1	5.5							
M2 - No. 2 (Operates 15 Mint Per Week)	5.5							
HCL Acid Pump (Not working)								

FORM 1285-47

FOSTER WHEELER ENERGY CORPORATION 110 SOUTH ORANGE AVE., LIVINGSTON, N.J.

BY..... DATE..... SUBJECT Boiler Area Motors, Fiber Plant SHEET NO. 1 OF 1

CHKD. BY..... DATE..... JOB NO.....

CORRECT POWER FACTOR TO

Item No.	Motor KW	Motor F.L.C	Name Plate P.F	Operating K.W	Operating P.F	Multiplier	Required Kvar	
Instrument Air Compressors								
No. 1	20 HP	28 A.						
No. 2 (Spare)	7.5 HP	11.4A	0.83					
No. 3 (Spare)	7.5 HP	11.4A	0.83					
No. 4 (Spare)								
Boiler Forced Draft Fans (Reduced Voltage Start) Delta-Star								
No. 1	67	126 A	0.86					
No. 2	67	126 A	0.86					
(Not operating)								
Mazut Fuel Injection Pumps								
No. 1 P-19	5.5	11A.	0.88					
No. 2 P-20	5.5	11A.	0.88					
No. 3 P-21	5.5	11A.	0.88					
No. 4 P-22	5.5	11A.	0.88					
Fuel Oil Pumps to Burners								
No. 1 P-23	1.5							
No. 2 P-24	1.5							
No. 3 P-25	1.5							
Condensate Pumps								
No.1 P-26	3.5							
No.2 P-27	3.5							
No.3 P-28	3.5							
(Not working)								
DEAERATOR Pumps								
No. 1 P-9	75 HP	139	0.91					
No. 2 P-10 (Spare)	75 HP	139	0.91					
No. 3 P-11 (Spare)	75 HP	139	0.91					

FORM 12851-47

FOSTER WHEELER ENERGY CORPORATION 110 SOUTH ORANGE AVE., LIVINGSTON, N

BY_____ DATE_____ SUBJECT Plant Measurements 2-26-1985 SHEET NO. 1 OF

CHKD. BY_____ DATE 380 V Switchgear Boiler Plant Motors JOB NO.

0 = Operating

UNIT NO.	O.C. L1	O.C L2	O.C L3	O.KW L1	O.KW L2	O.KW L3	O.T. KW	O.V. L1-L2	O.V. L2-L3	O.V L1-L3	
P-1	72.9	73	73.7				32.4	370	358	362	Water Well Pum
P-8	123	115	124				75				Soft Water Pump
No. 1	115	116	119				45.8				F.D. Fan
P-9	100	100	102				56.8				Deaerator Pump

FOSTER WHEELER ENERGY CORPORATION 110 SOUTH ORANGE AVE., LIVINGSTON, N.J.

BY..... DATE..... SUBJECT Plant Measurements 26-2-85 SHEET NO. 1 OF 1

CHKD. BY..... DATE Fiber Plant 380 V. Switchgear JOB NO.....

UNIT NO.	F.L.C. L1	F.L.C. L2	F.L.C. L3	KW L1	KW L2	KW L3	P.F.	REMARKS
2 A								Spare
2 B								Spare
3 A	144	146	137	66	73	2		
3 B								Bad Unit
3 C								
3 D								
6 A	26.8	23.6	13	8.8	8.8	3.4		
6 B	160	128	124	64	56	2.8		
7 A								Not Working
7 B								Not Working
10 A	142	151	170	25	89	65		
10 B								Spare
11 A								Not Working
11 B								Not Working
14 A								Bad Unit
14 B	15.8	23.1	65.2					Lighting
15 A	228	30.6	216	110	115	7		
15 B	279	203	259	110	125	3		
16 A	112	117	110	47	57.3	13.1		
16 B								Spare
17 A	39	37.8	32.3	60	20	2.5		Bruckner
17 B								Spare
17 C	9[illegible].6	105	109	42	56.8	0.2		No. 1 (Old) Printing
17 D								No. 2 (New) not working Printing

FORM [illegible]-47

FOSTER WHEELER ENERGY CORPORATION 110 SOUTH ORANGE AVE., LIVINGSTON, N.J.

BY ..... DATE ..... SUBJECT Plant Measurements SHEET NO. 1 OF 1

CHKD. BY ..... DATE 380 V Switchgear Shobra Plant 26-2-85 JOB NO. .....

0 = Operating

UNIT NO.	O.C. L1	O.C. L2	O.C. L3	O.KW L1	O.KW L2	O.KW L3	O.T. KW	O.V. L1-L2	O.V. L2-L3	O.V. L1-L3	
1A	69.3	37	52.4	23.8	23.	16.4		390	394	394	
1B	19.9	195	191	79	115	33		392	394	395	
	504										
2A	365	313	276	85	135	47					
2B	80.8	94.6	91.5	20.3	35.6	14.8					
3A	45.2	33.8	52	26.5	9.3	11.2		389	387	394	
3B	24.3	4.8	4.0	13.8	2.62	.4.		387	394	388	
3C											
3D	55.2	37.9	25.5	18.8	19.9	5		387	383	385	
8A	190	197	210	50	92	39					
8B	118	104	114	22.7	43.3	21.7					
9A	104	92.5	95.5	26.2	34.9	19.1					
9B	127	115	13.5	65	57	8					
10A											Spare
10B	88.4	113	73.3	37.5	52.5	7.2		383	384	383	

FORM C881-47

ELECTRICAL ONE LINE DIAGRAMS

FOSTER WHEELER ENERGY CORPORATION 110 SOUTH ORANGE AVE., LIVINGSTON, N.J.

BY R. LAMA DATE 2-17-75 SUBJECT ELECTRIC POWER SHEET NO. 1 OF

CHKD. BY DATE TEXTILE PLANT JOB NO

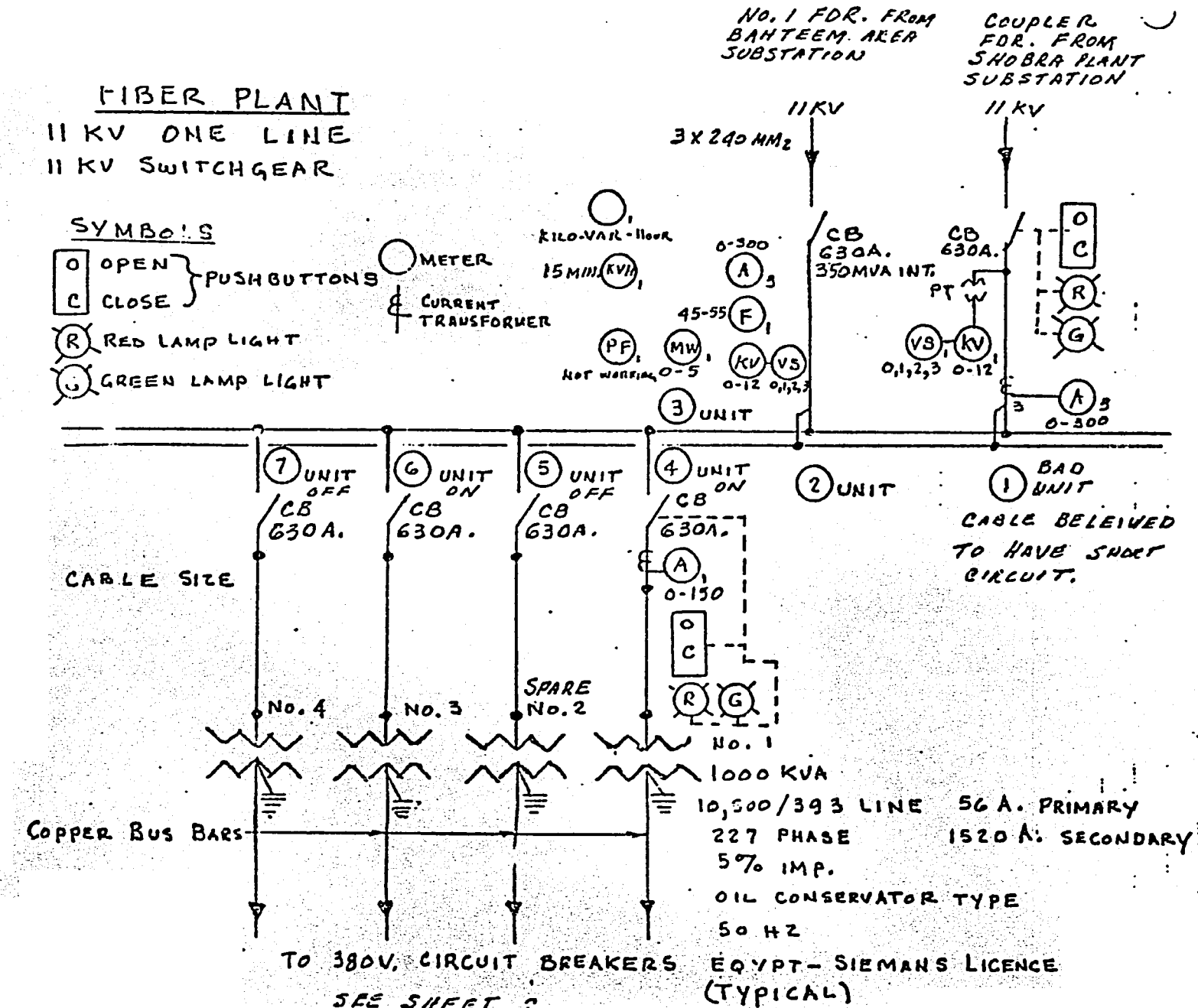

FOSTER WHEELER ENERGY CORPORATION 110 SOUTH ORANGE AVE., LIVINGSTON, N.J.

BY R.J.K.P. DATE 2-17-85 SUBJECT ELECTRIC POWER SHEET NO. 2 OF

CHKD. BY DATE TEXTILE PLANT JOB NO.

FOSTER WHEELER ENERGY CORPORATION 110 SOUTH ORANGE AVE., LIVINGSTON, N.J.

BY..... DATE..... SUBJECT Boiler Area, Fiber Plant SHEET NO. 1

CHKD. BY..... DATE..... JOB NO.....

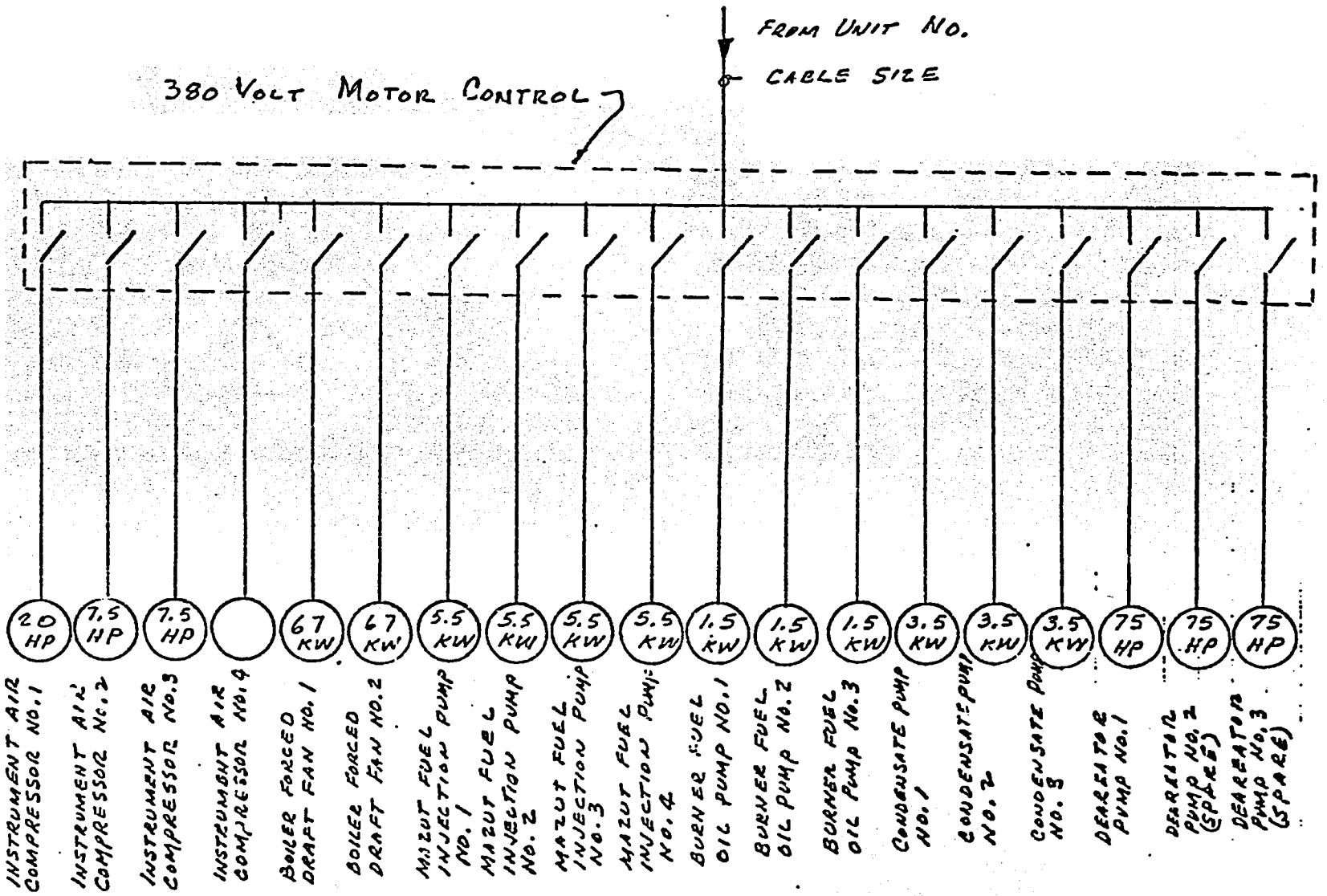

FORM C-8512-49

380 VOLT ONE LINE DIAGRAM

BOILER AREA

FOSTER WHEELER ENERGY CORPORATION 110 SOUTH ORANGE AVE., LIVINGSTON, N.J.

BY ..... DATE ..... SUBJECT Water Treating Area, Fiber Plant SHEET NO. 1 OF 1

CHKD. BY ..... DATE ..... JOB NO. .....

380 Volt One Line Diagram
Water Treating Plant

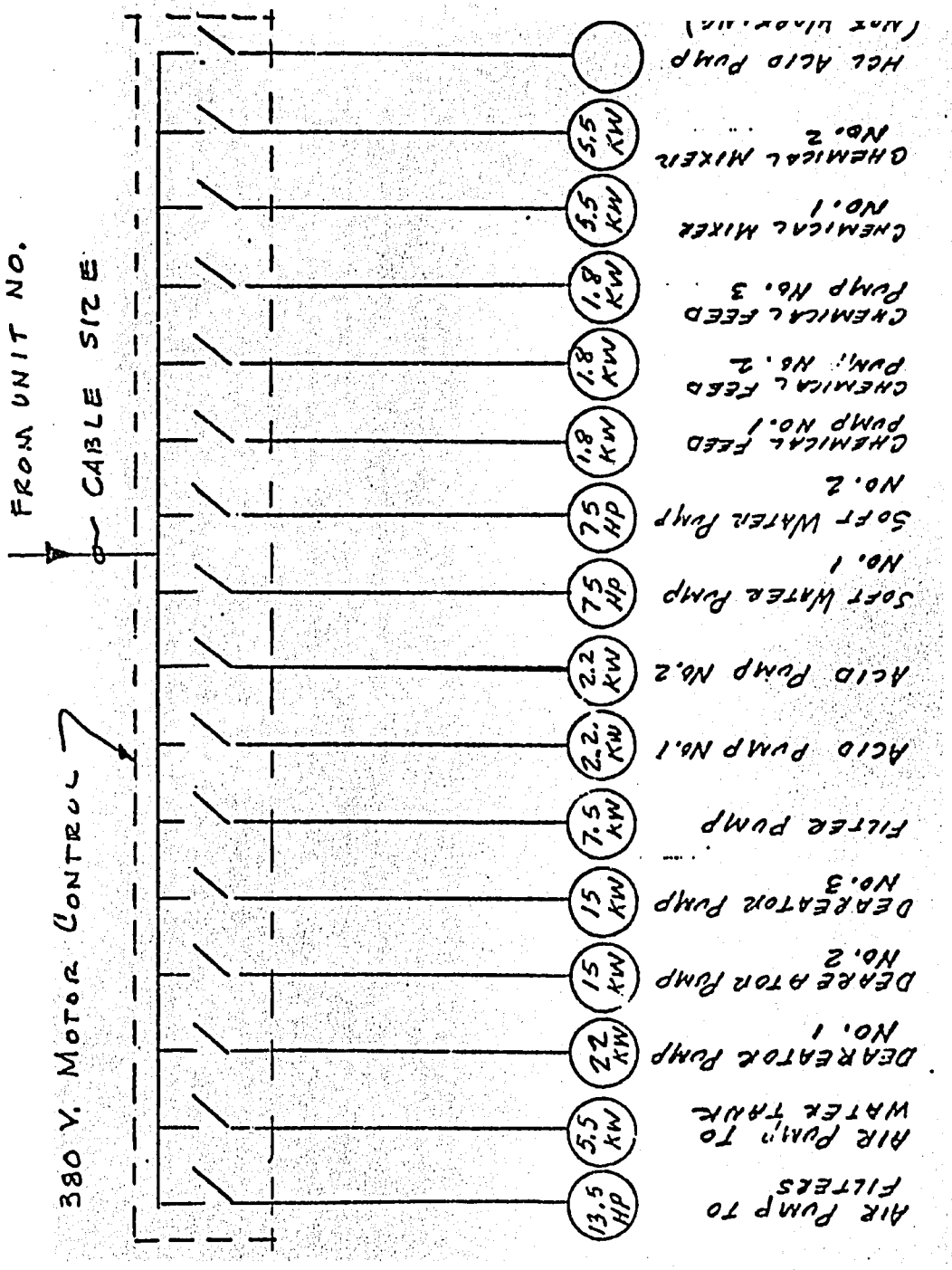

FORM GSS-147

FOSTER WHEELER ENERGY CORPORATION 110 SOUTH ORANGE AVE., LIVINGSTON, N.J.

BY ____ DATE ____ SUBJECT Water Well Pumps, Fiber Plant SHEET NO. 1 OF 1

CHKD. BY ____ DATE ____ JOB NO. ____

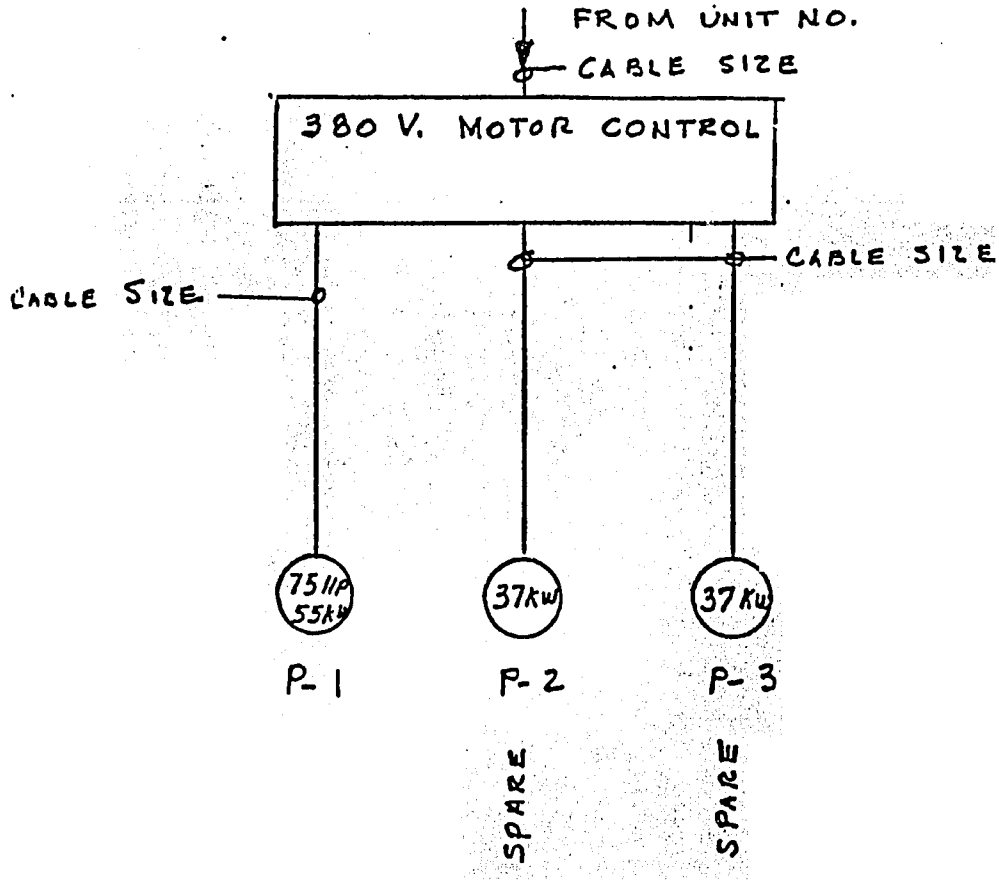

380 VOLT ONE LINE DIAGRAM
WATER WELL AREA

FORM C 881-47

FOSTER WHEELER ENERGY CORPORATION 110 SOUTH ORANGE AVE., LIVINGSTON, N.J.

BY ..... DATE ..... SUBJECT ELECTRIC POWER ..... SHEET NO. 1 OF 2

CHKD. BY ..... DATE ..... TEXTILE PLANT ..... JOB NO. .....

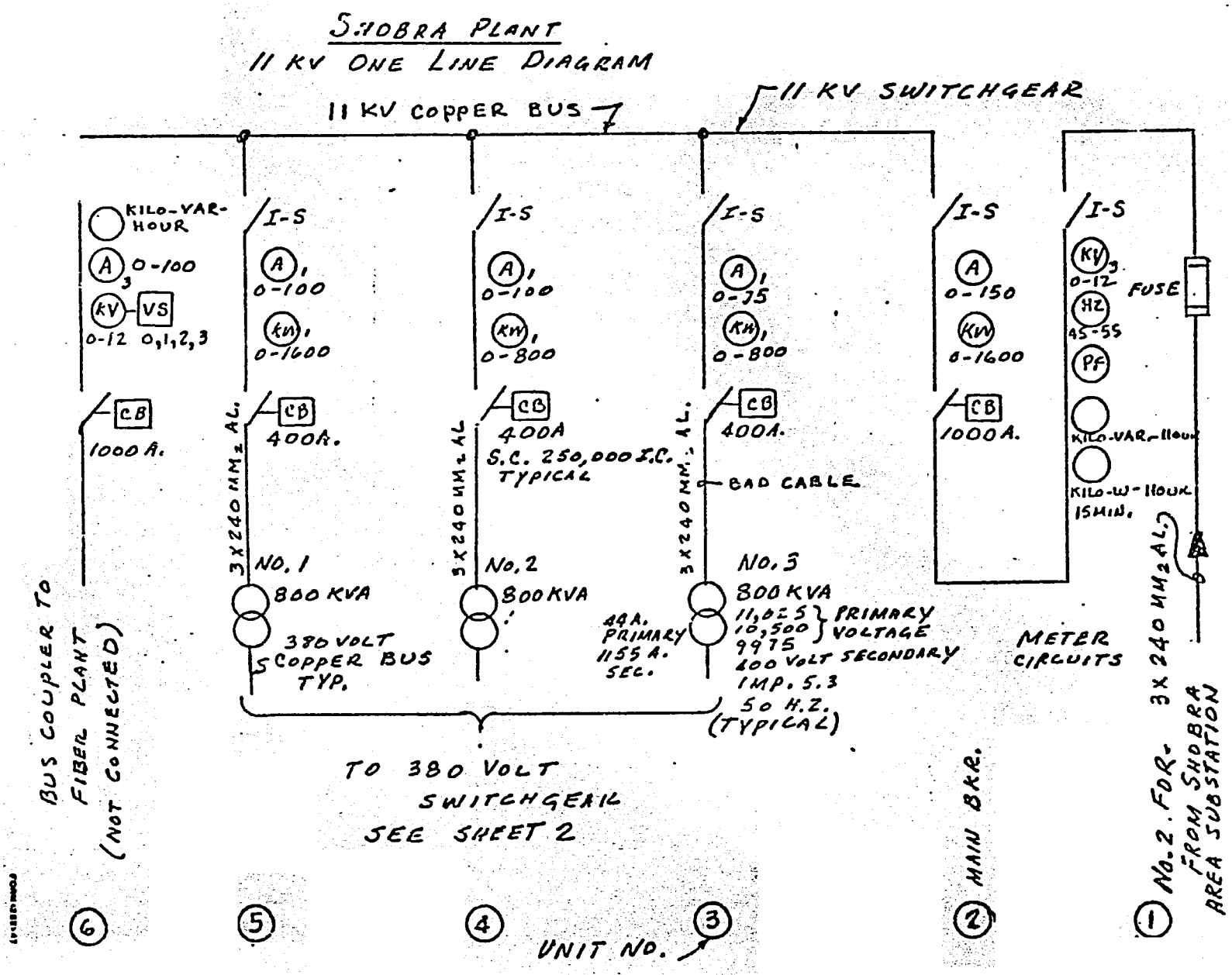

FOSTER WHEELER ENERGY CORPORATION 110 SOUTH ORANGE AVE., LIVINGSTON, N.J.

BY ..... DATE ..... SUBJECT ELECTRIC POWER ..... SHEET NO. 2 OF 2

CHKD. BY ..... DATE TEXTILE PLANT ..... JOB NO. .....

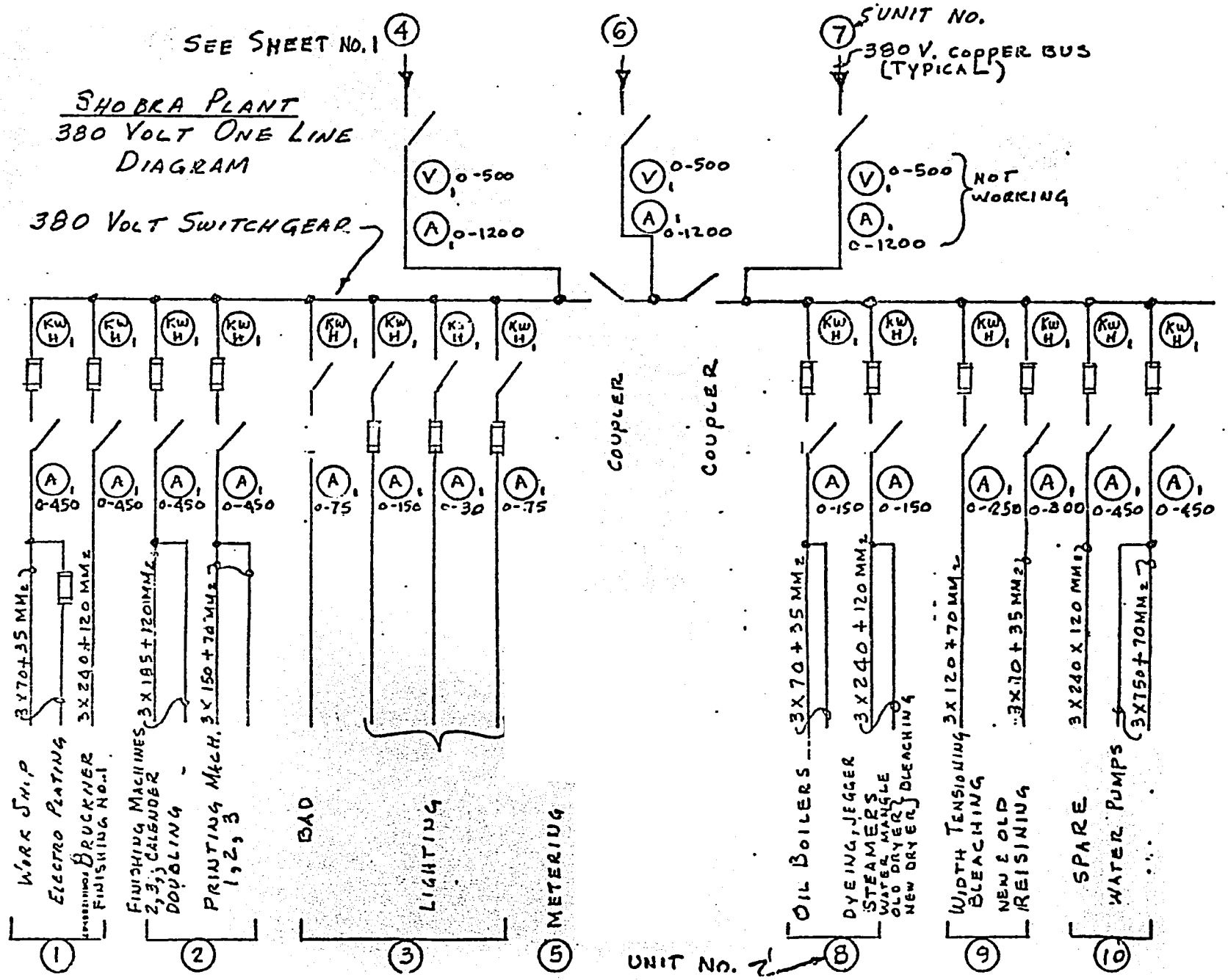

FOSTER WHEELER ENERGY CORPORATION 110 SOUTH ORANGE AVE., LIVINGSTON, N.J.

BY ..... DATE ..... SUBJECT ELECTRIC POWER ..... SHEET NO. 1 OF .....

CHKD. BY ..... DATE TEXTILE PLANT - SHOBRA PLANT ..... JOB NO. .....

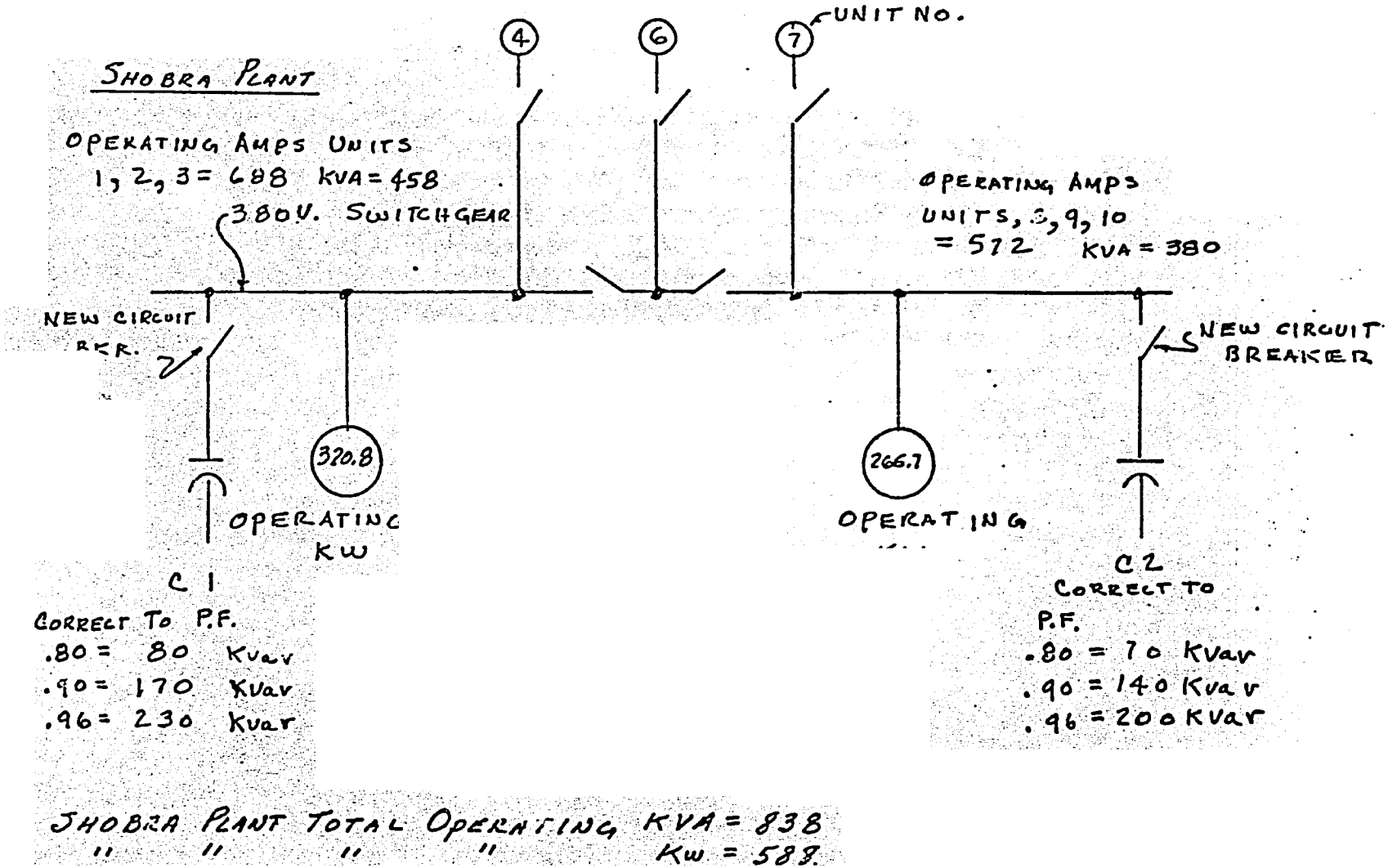

FOSTER WHEELER ENERGY CORPORATION 110 SOUTH ORANGE AVE., LIVINGSTON, N.J.

BY ____ DATE ____ SUBJECT ELECTRIC POWER ____ SHEET NO. 1 OF ____

CHKD. BY ____ DATE TEXTILE PLANT - FIBER PLANT ____ JOB NO. ____

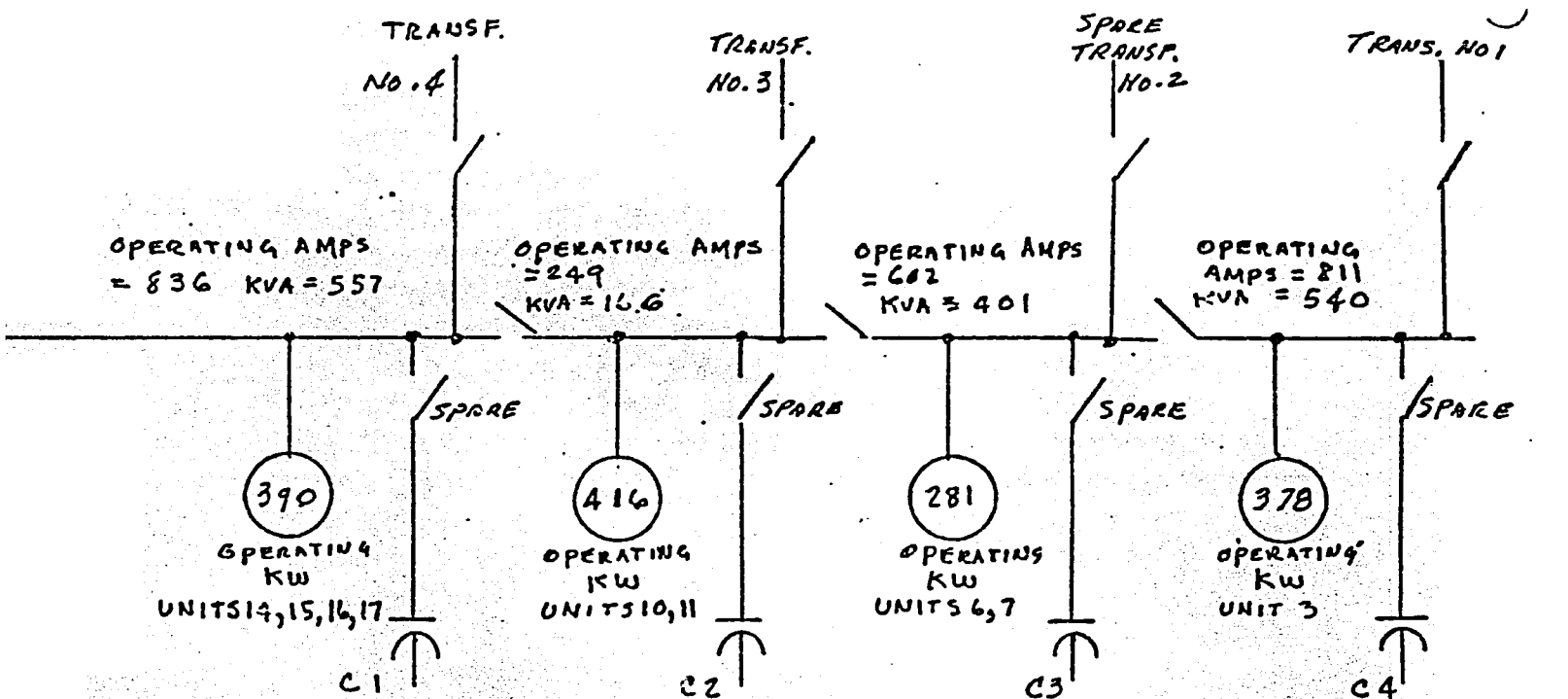

C1	C2	C3	C4
CORRECT TO P.F.	CORRECT TO P.F.	CORRECT TO P.F.	CORRECT TO P.F.
.80 = 100 kvar	.80 = 30 Kvar	.80 = 75 kvar	.80 = 100 kvar
.90 = 200 kvar	.90 = 60 Kvar	.90 = 150 kvar	.90 = 200 kvar
.96 = 280 Kvar	.96 = 85 Kvar	.96 = 200 kvar	.96 = 275 Kvar

FIBER PLANT TOTAL OPERATING KVA = 1664
" " " " KW = 1465

FORM 888-47

FOSTER WHEELER ENERGY CORPORATION 110 SOUTH ORANGE AVE., LIVINGSTON, N.J.

BY R. LAMB DATE 27-2-65 SUBJECT ELECTRIC POWER SHEET NO. 3 OF 4

CHKD. BY ..... DATE TEXTILE PLANT ..... JOB NO. .....

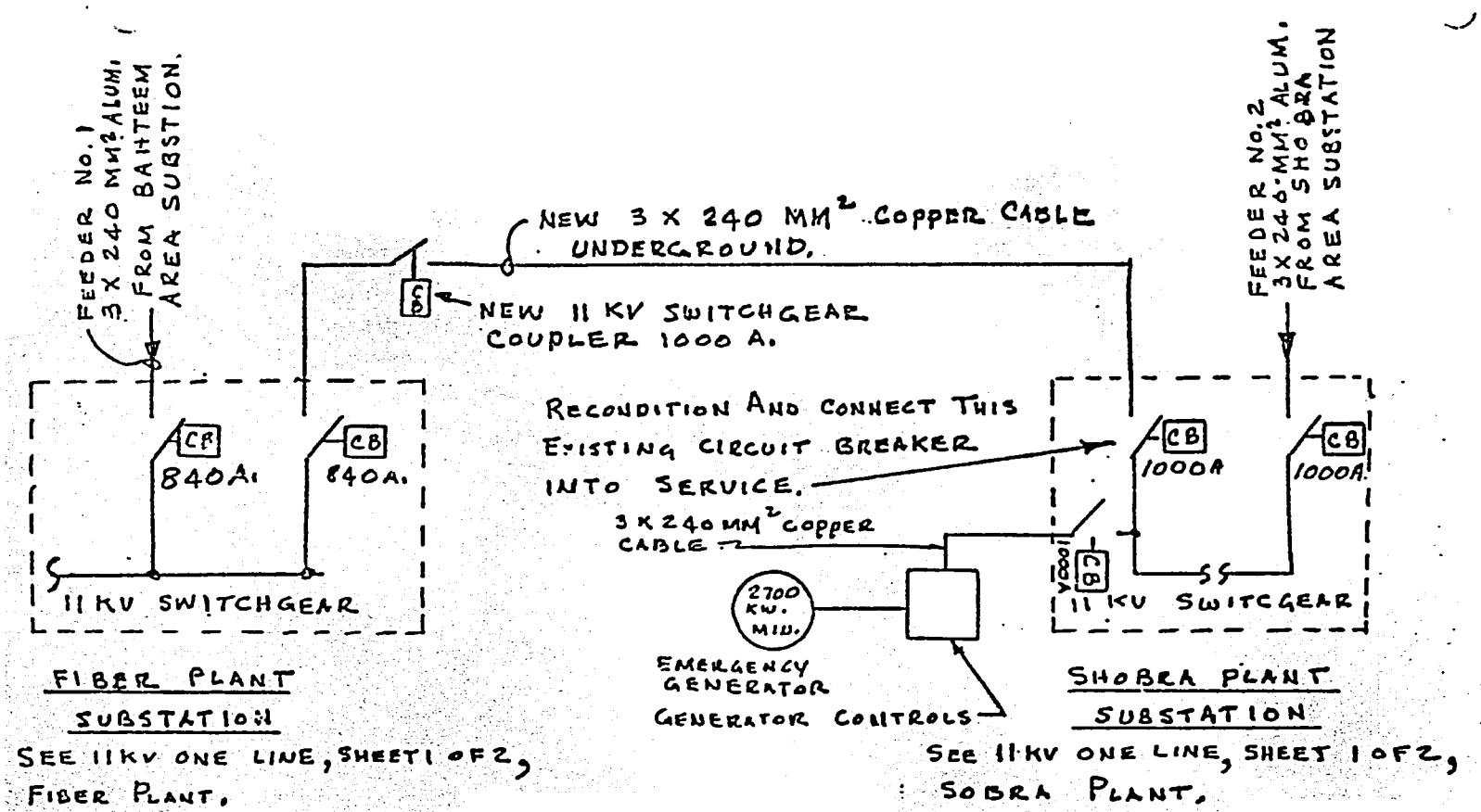

COMBUSTION MEASUREMENTS

CAIRO DYEING AND FINISHING COMPANY

COMBUSTION ANALYSIS AND EVALUATION

MEASUREMENTS

EQUIPMENT ITEM TESTED	STACK TEMP-°F	O_2 PERCENT IN STACK	CO_2 PERCENT IN STACK	CO PRESENT	CURRENT EFFICIENCY PERCENT	NOTES
Steam Boiler	385	4.2	13.1	No	86.2	(1)
	345	9.0	9.2	No	83.5	(2)
Oil Boiler No.1	572	5.8	11.5	Yes	78.2	(3) (6)
	517	7.5	10.6	No	80.8	(4)
Oil Boiler No.2	590	3.1	14.8	No	82	(5)
	603	2.9	14.4	No	81.9	(5)

Notes:
1) Steam boiler operating at full load
2) Steam boiler operating at low load
3) Oil boiler No.1 burner tip required cleaning
4) Oil burner tip cleaned
5) Oil boiler burner tip did not require cleaning
6) Efficiency calculated

TEMPERATURE MEASUREMENTS

TEMPERATURE MEASUREMENTS

CAIRO DYEING AND FINISHING CO.

Location	Temperature °F
Shobra - Hot wash water	105
Shobra - Dye Jigger bath	160
Fiber - Finishing machine FN-1 stacks, each	321

Shobra) - Checked inlet and outlet of 20
Fiber) Steam traps as indicated in
ECO # CD - A3

INSULATION MEASUREMENTS

INSULATION MEASUREMENTS
CAIRO DYEING AND FINISHING CO.
SHOBRA FACTORY

TAG No.	DESCRIPTION	FLUID	PIPE DIA.IN	ESTIMATE LENGTH.FT.
I-1	Bleaching 1st page	Steam	1	6
			$2\frac{1}{2}$	30
			3	6
I-1	Bleaching - 2nd page	Steam	$1\frac{1}{2}$	20
			2	6
			6	5
I-2	Bleaching - 2nd page	Steam	8	20
I-1/2	Bleaching 3rd page	Steam	3	30
I-3/4	" " "	"	$1\frac{1}{2}$	20
			2	6
			6	3
I-1	Bleaching 4th page	"	$1\frac{1}{2}$	20
			2	6
			6	3
I-1	Dryer (old)	"	2	50
			3	8
I-2	Dryer (old)	Condensate	3	65
I-3	" "	"	3	45
I-1/2	Dyeing	Steam	1	170
			3	100
I-1	Dryer	"	2	40
			4	40
I-1	Washing	Steam	1	10
I-1	Dryers	Steam	2	40
		"	4	150

INSULATION MEASUREMENTS
CAIRO DYEING AND FINISHING CO.
SHOBRA FACTORY

Tag No.	Description	Fluid	Pipe Dia.In.	Estimated Length.Ft.
-	Main steam to finishing		2	80
-	Main steam to bleaching		2	70
-	Steam Collector		3	10
-			8	31
			3	4 valves
			8	6 valves
	Drying (new)	Steam	4	90
		Condensate	$1\frac{1}{2}$	30
I-1	Width Tensioning	Steam	2	20
-	Printing	"	4	20
-	Fininshing	"	2 ½	100
-	Main Steam header (Includes all missing insulation plus uninsulated flanges.)		8	150

INSULATION MEASUREMENTS

CAIRO DYEING AND FINISHING CO.

FIBER FACTORY

Tag No.	Description	Fluid	Pipe Dia.In.	Estimated Length. Ft	
I-6	Washing Machine	Steam	1	4	
	" "	"	4	1	
I-1	Drying "	"	1	40	
			3	40	
I-1	Drying	Condensate	1	40	
			1 ½	40	
			3	16	
I-1	Main Steam	Steam	1 ½	25	
			6	170	Includes 10 Flanges
			6"	4	valves
I-2	" "	Steam	6"	3	valves
			6"	40	- includes 15 flanges
I-1	Width Tensioning	"	1	90	16 valves
			1 ½	12	
		Condensate	1	90	
			1 ½	12	
I-1	Steamer	Hot oil	3	20	
		Steam	3	130	
	Jet Dyeing	Steam	1	60	
			3	24	

INSULATION MEASUREMENTS

CAIRO DYEING AND FINISHING CO.

BOILER PLANT

Tag No	Description	Fluid	Pipe Dia. In.	Estimated Length.Ft
I-1	Main steam		1	20
I-2	Collector-Valves & flanges not insulated		3	3
			8	3
			12	1
I-1	Collector outside toward Shobra Factory		0	8
			10	12
			8	- 4 valves

FLOW MEASUREMENTS

EXHAUST FLOW FROM . INISHING

MACHINE, FN-1

CAIRO DYEING AND FINISHING CO.

FIBER PLANT

No. of stacks - 3

Diameter of each stack - 16 inches

Exhaust temperature measured each stack - 321°F

Exhaust velocity measured - per Dwyer manometer

Stack 1 - 1.05 "max, reading

Stack 2 - 0.85 " " "

Stack 3 - 1.05 " " "

Transversed each stack with probe to determine average velocity. However, inconsistant reading occurred due to close proximity of blower upstream of measurements.

To determine average velocity use maximum velocity times 0.60 and read velocity from chart enclosed with instrument.

MISCELLANEOUS MEASUREMENTS

COUNT OF TOTAL STEAM TRAPS

CAIRO DYEING AND FINISHING CO.

SHOBRA FACTORY

EQUIPMENT

ITEM No.	DESCRIPTION	TYPE	QUANTITY
SG-1/2	Singeing Machines	Float	1
J-1/3	"J" Box	Bucket	9
		Float	1
WM-1/2	Water Mangle	Float	1
DR-1/2	Drying Machines	Float	21
		Disc	7
WT-1/2	Width Tensioning	Disc	3
PR-1/3	Printing Machine	Float	2
		Disc	15
FN-1/3	Fininshing Machine	Bucket	2
		Disc	5
STM-1/2	Steamer Machine	Float	6
CL-1/6	Calender Machines	Float	2
	Main Steam	Float	2
	Other	Disc	5

INSULATION MEASUREMENTS

CAIRO DYEING AND FINISHING CO.

FIBER FACTORY

Tag No.	Description	Fluid	Pipe Dia.In.	Estimate Length. Ft.
I-1/6	Singeing	Steam	1	60
			2	15
I-1/5	3rd Washing	"	1½	20
I-8	"	"	3	10
I-1	2nd L Box	"	2	10
I-2	" "	"	2	3
I-3	" "	"	3	30
I-4	" "	"	2	3
I-5	" "	"	2	5
I-½	Washing After Box	"	1	5
I-3			1 ½	10
I-4			1	4
I-5/8			1	10
I-9			3	5
I-2	Third L Box		2 ½	6
I-3			4	25
			6	4
I-4			2	5
I-5			2	5
I-½	Washing Machine		1	4
I-3	" "	Hot Water	2	10
		Steam	1	4
I-4	" "	Hot water	1	4
			2	10
I-5	" "	Steam	1	4

COUNT OF TOTAL STEAM TRAPS
CAIRO DYEING AND FINISHING CO.
FIBER FACTORY

EQUIPMENT

ITEM No	DESCRIPTION	TYPE	QUANTITY
DR-1	Drying	Disc	39
WT-1	Width Tenioning	Disc	4
STM-1	Steamer	——-	21
FN-1/2	Finishing Machine	Disc	7
		Bucket	24
JD-1/9	Jet Dyeing	Float	3
DJ-1/3	Dye Jiggers	Disc	3
	Main Steam Line	Disc	4

COUNT OF TOTAL STEAM TRAPS
CAIRO DYEING AND FINISHING CO.
BOILER PLANT

EQUIPMENT

ITEM No.	DESCRIPTION	TYPE	QUANTITY
SG-1	Steam Generator	Disc	6
		Float	1
DE-1	Deaerator	Float	2

STEAM TRAPS TESTED

CAIRO DYEING AND FINISHING CO.

Location	Type	No.	Condition	Comments
Shobra - Main steam	Disc	2	Both Failed	Visible-Blowing thru
Shobra New Dryer	Float	3	One failed	Visible-Blowing thru
Shobra Old Dryer	Disc	1	Satisfactory	
	Float	2	Satisfactory	
Fiber-Main Steam	Disc	2	Both Failed	Visible-Blowing thru
Fiber-Finishing	Inv. Bucket	5	Satisfactory	
Fiber-Dryer	Disc	4	"	

Note - all checked for noise of trap operation using sonic instrument and inlet and outlet temperatures were measured with optical pyrometer.

Cairo Dyeing & Finishing

PLOT PLAN

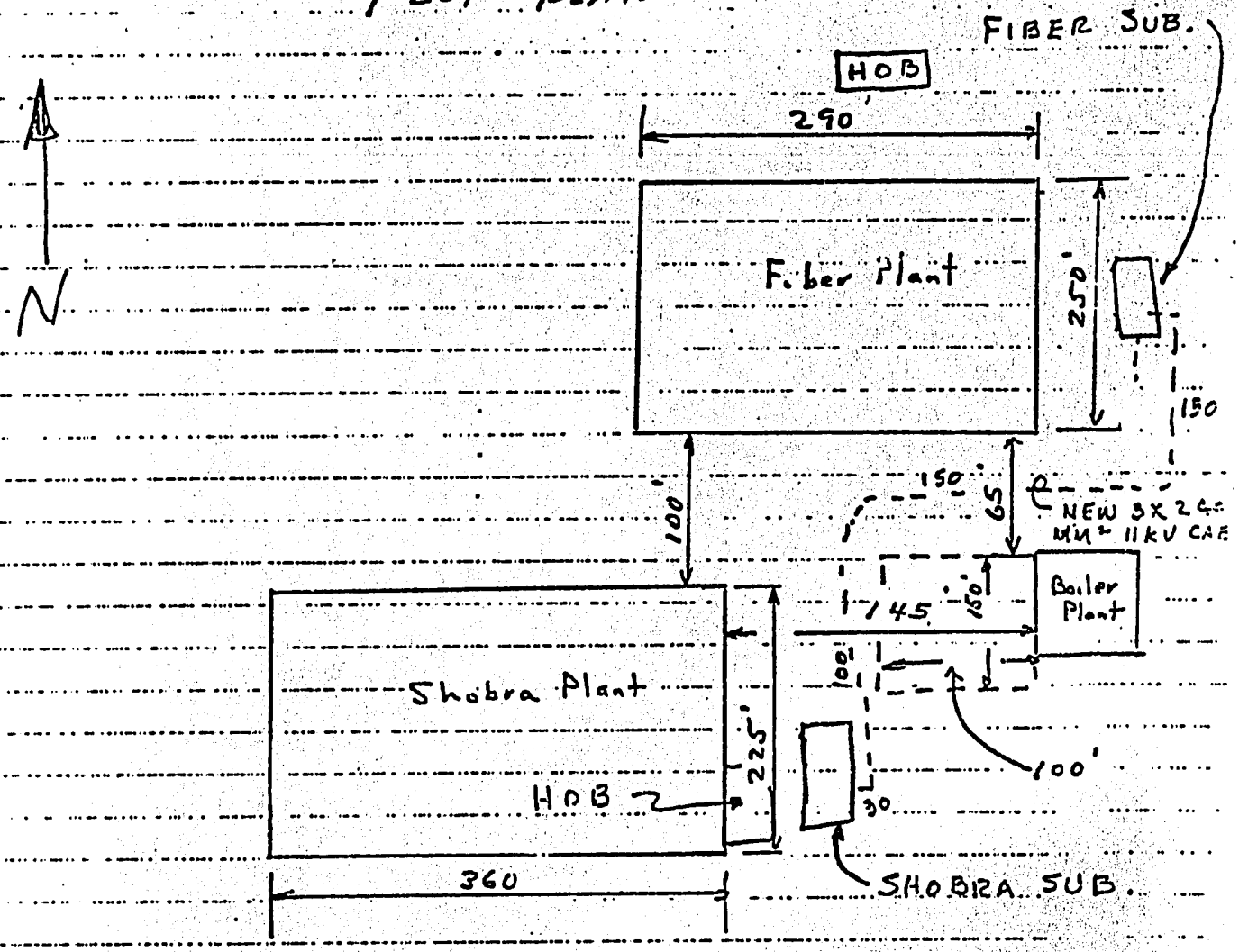

2530

ORGANIZATION for
ENERGY
PLANNING

جهاز تخطيط الطاقة

AUDIT

FINAL REPORT

VOLUME 1 OF 2

BY

JOINT ENGINEERING GROUP

* ORGANIZATION FOR ENERGY PLANNING (OEP)
* CAIRO DYEING AND FINISHING COMPANY
* FOSTER WHEELER ENERGY CORPORATION (FWEC-USA)

April 4, 1985

O.E.P. ٢٣٤٠٤ تلكس دولى ٩٢٧١٨٩ أو ٩٢٦٣٤٢ : تليفون ١ شارع عائشة التيمورية ـ جاردن سيتى ـ القاهرة
1, Aisha El-Taymorya — Carden City, Cairo Phone 926342 or 927189 Telex. 23404 O.E.P.

APPENDIX "C"

SCHEMATIC FLOW DIAGRAMS

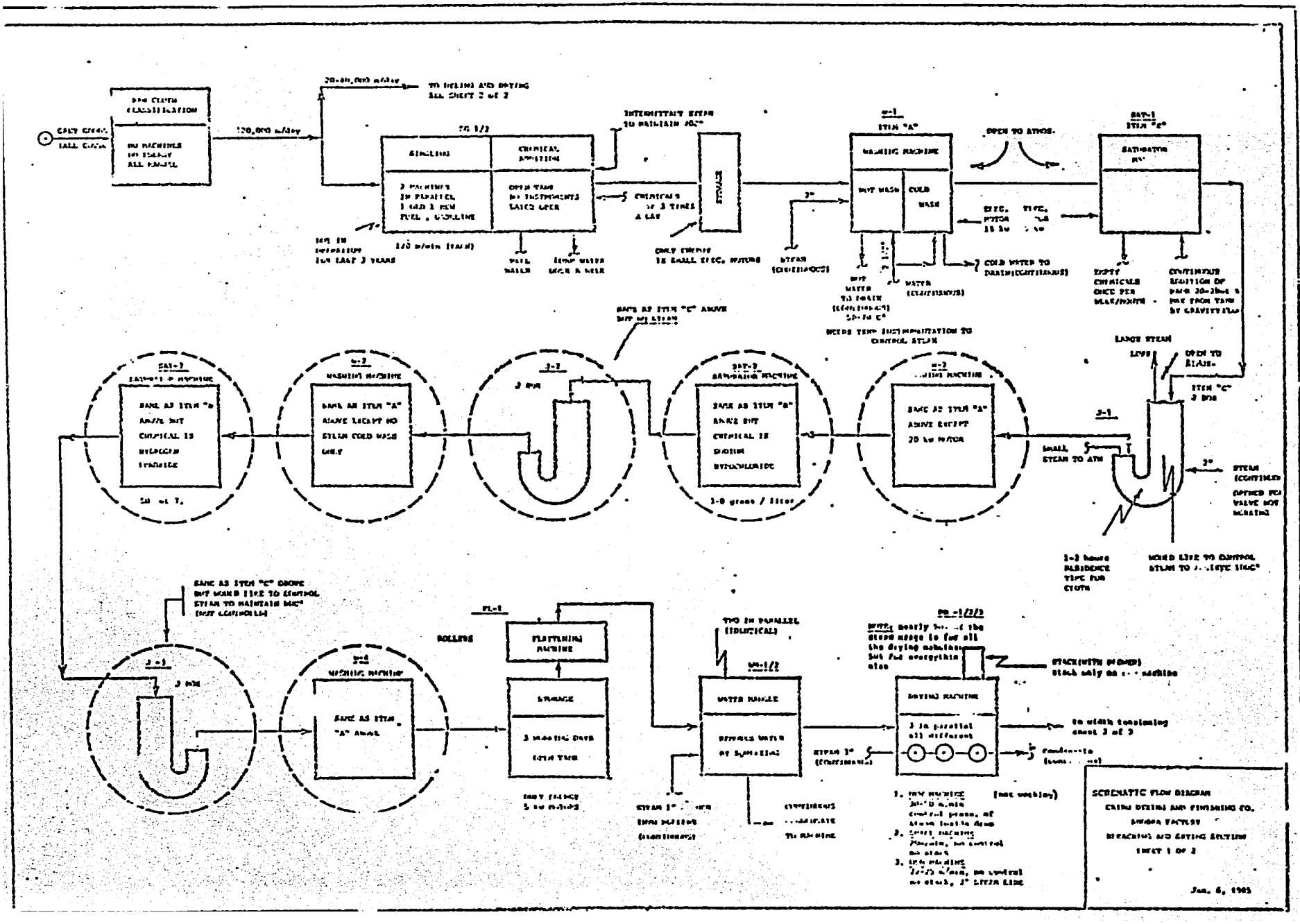
SCHEMATIC FLOW DIAGRAM
CHINA DYEING AND FINISHING CO.
SHANGHAI FACTORY
BLEACHING AND DYEING SECTION
SHEET 1 OF 2
Jan. 6, 1985

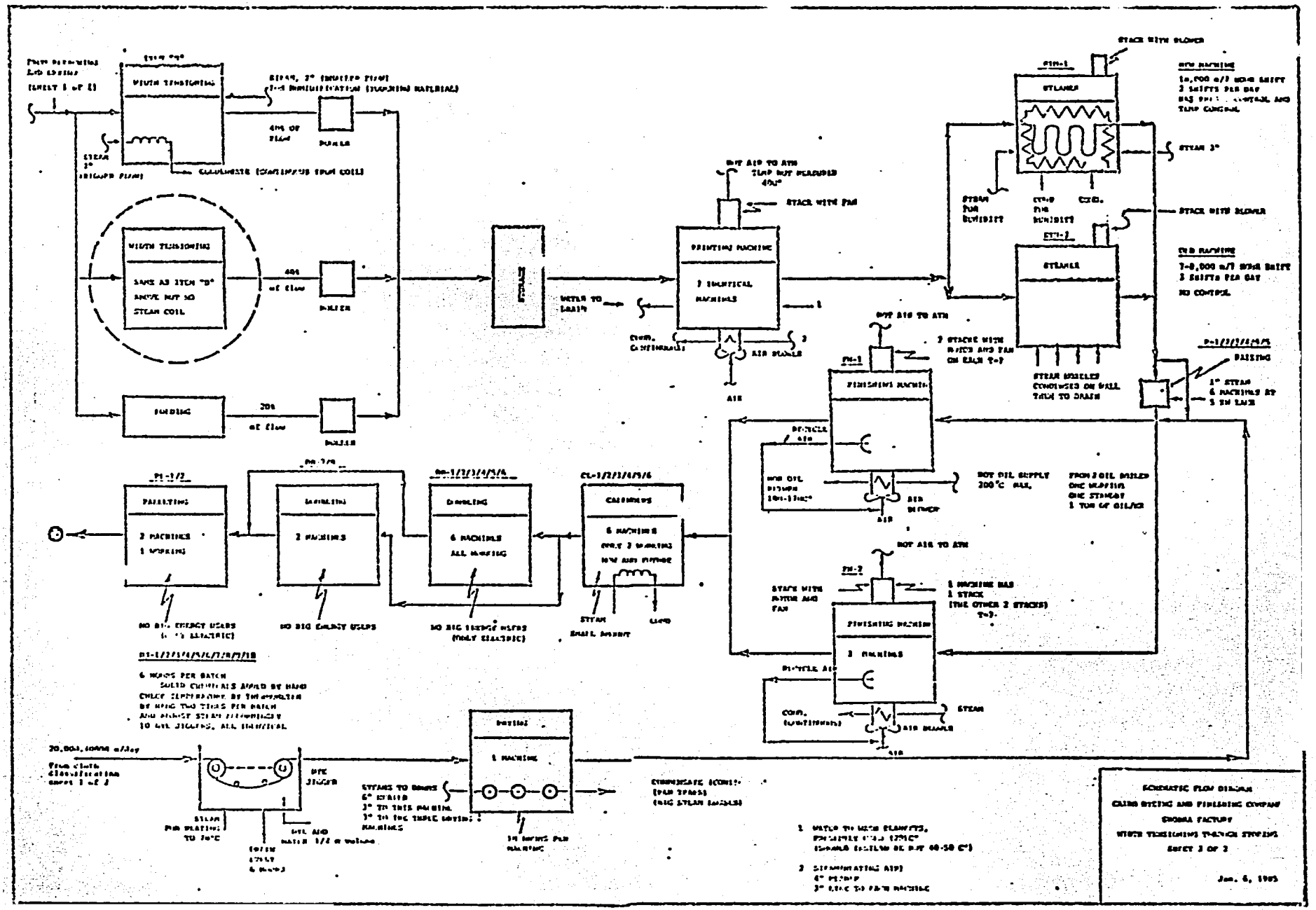

SCHEMATIC FLOW DIAGRAM
CLIFTON DYEING AND FINISHING COMPANY
SOMMA FACTORY
WIDTH TENSIONING THROUGH STENTERS
SHEET 2 OF 2

Jan. 6, 1985

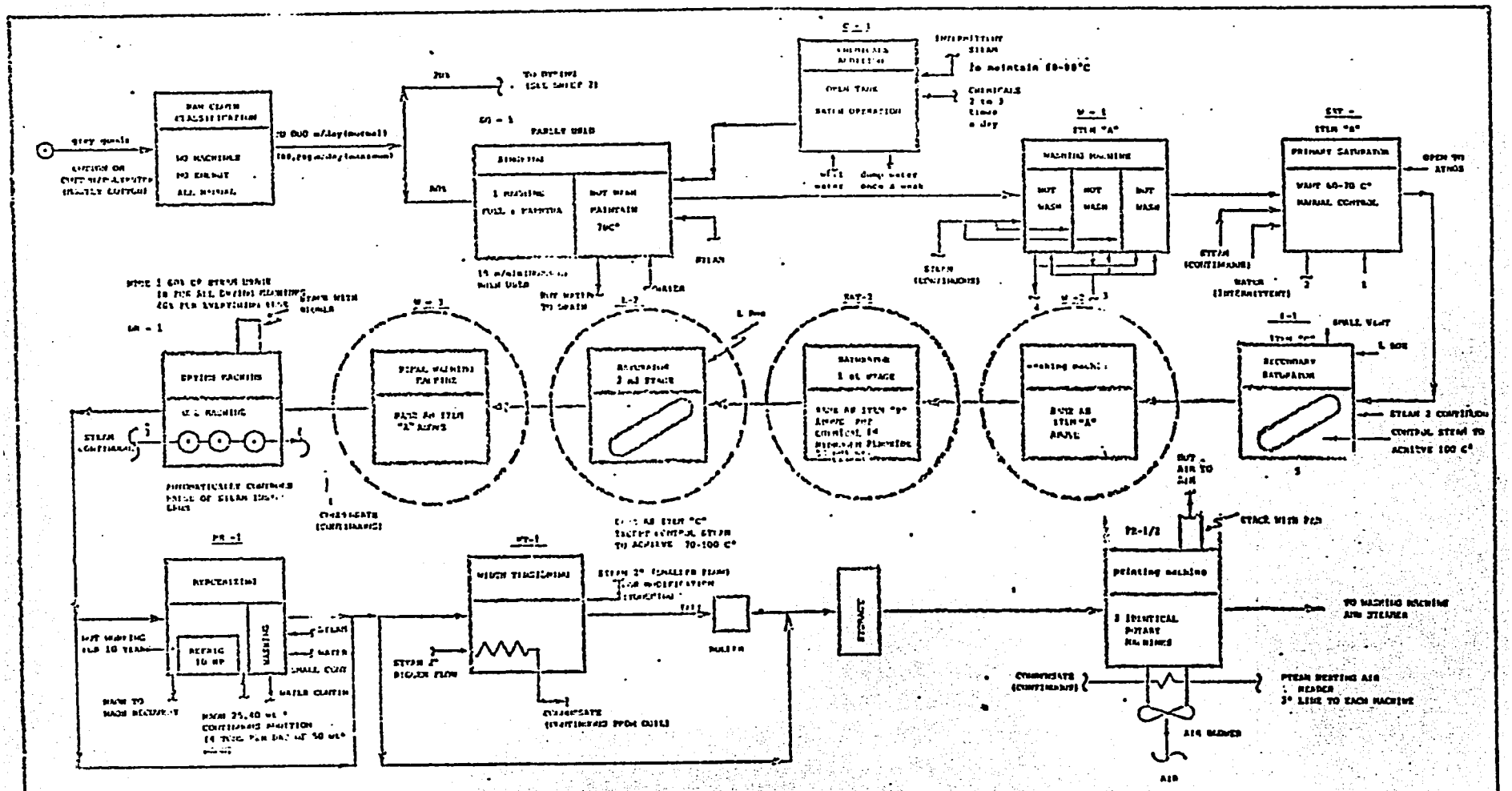

NOTES:

1. Continuous addition of [illegible]
2. Empty chemicals once per month
3. Water (continuous)
4. Hot water to drain (continuous) 50-70 C°
5. Oxygen to air

Has manual instrumentation to operate system is lacking

SCHEMATIC FLOW DIAGRAM
CARD DYEING AND FINISHING
FIBER FACTORY
BLEACHING DYEING, PRINTING SECTION
SHEET 1 OF 3

Jan. 6, 1995

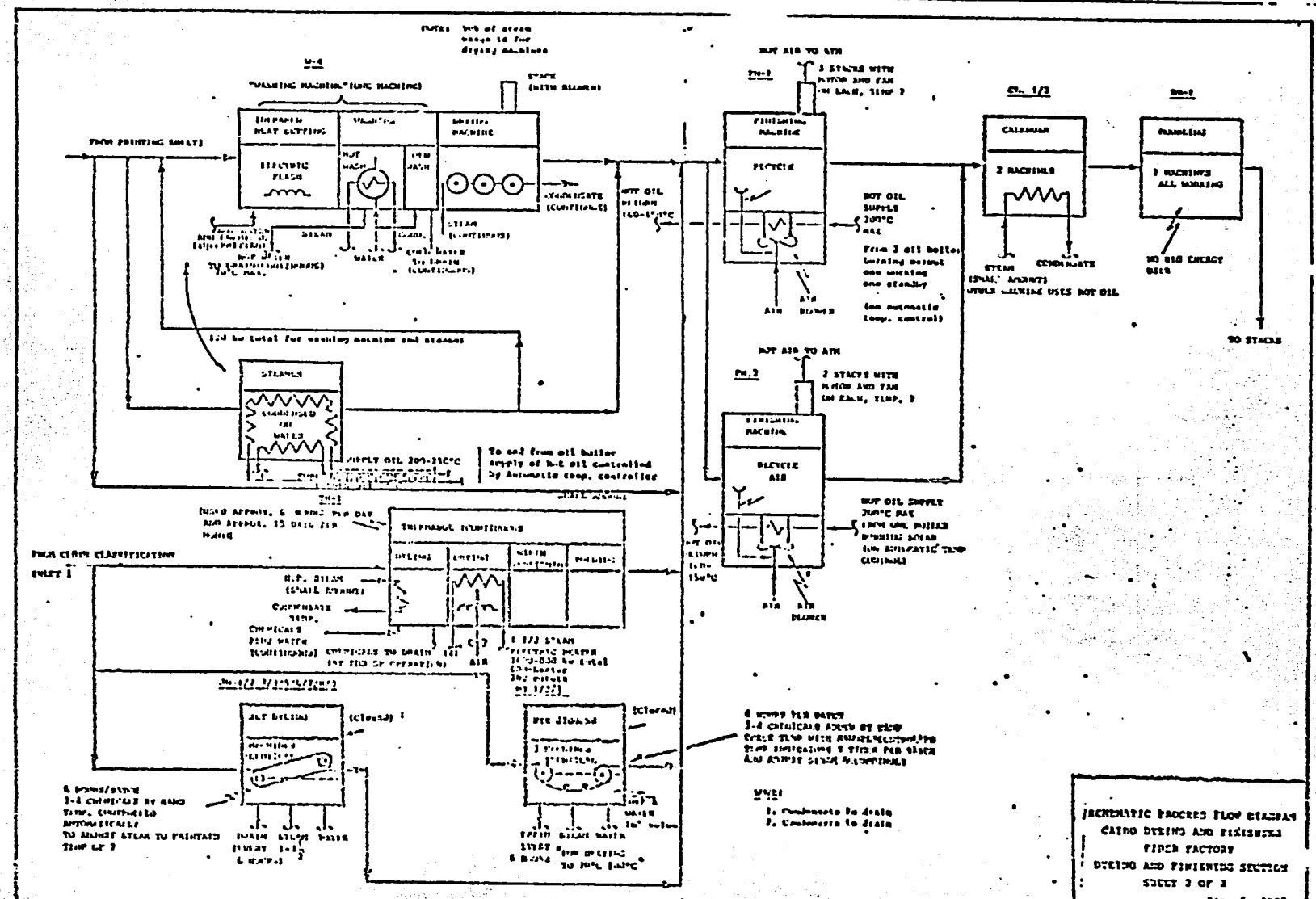
SCHEMATIC PROCESS FLOW DIAGRAM
CAIRO DYEING AND FINISHING
FIBER FACTORY
DYEING AND FINISHING SECTION
SHEET 3 OF 3
Jan. 6, 1995

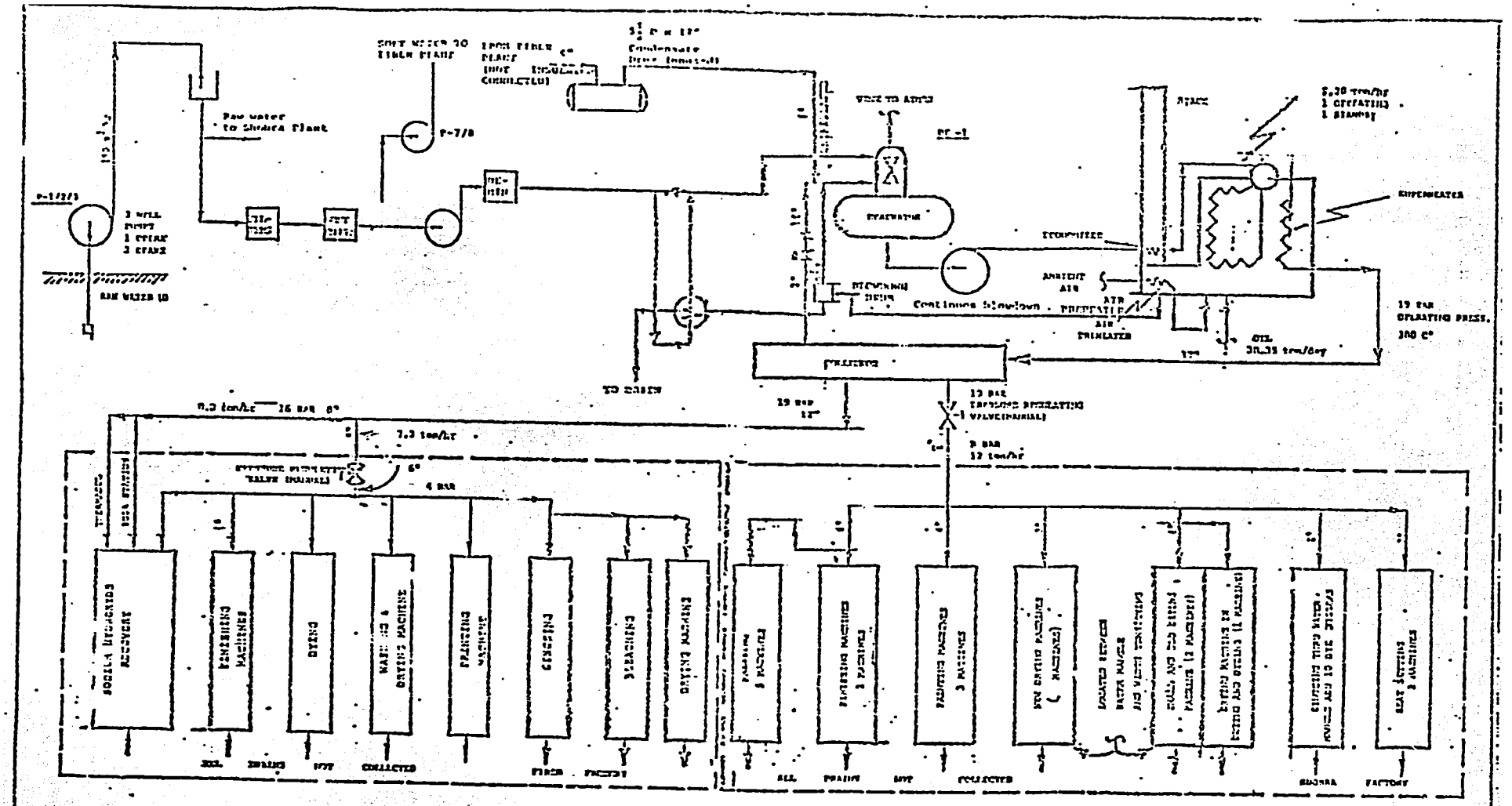

UTILITY FLOW DIAGRAM
CARBO DYEING AND FINISHING
SHADRA/FIBER FACTORY

STEAM AND WATER
MARCH 6, 1985

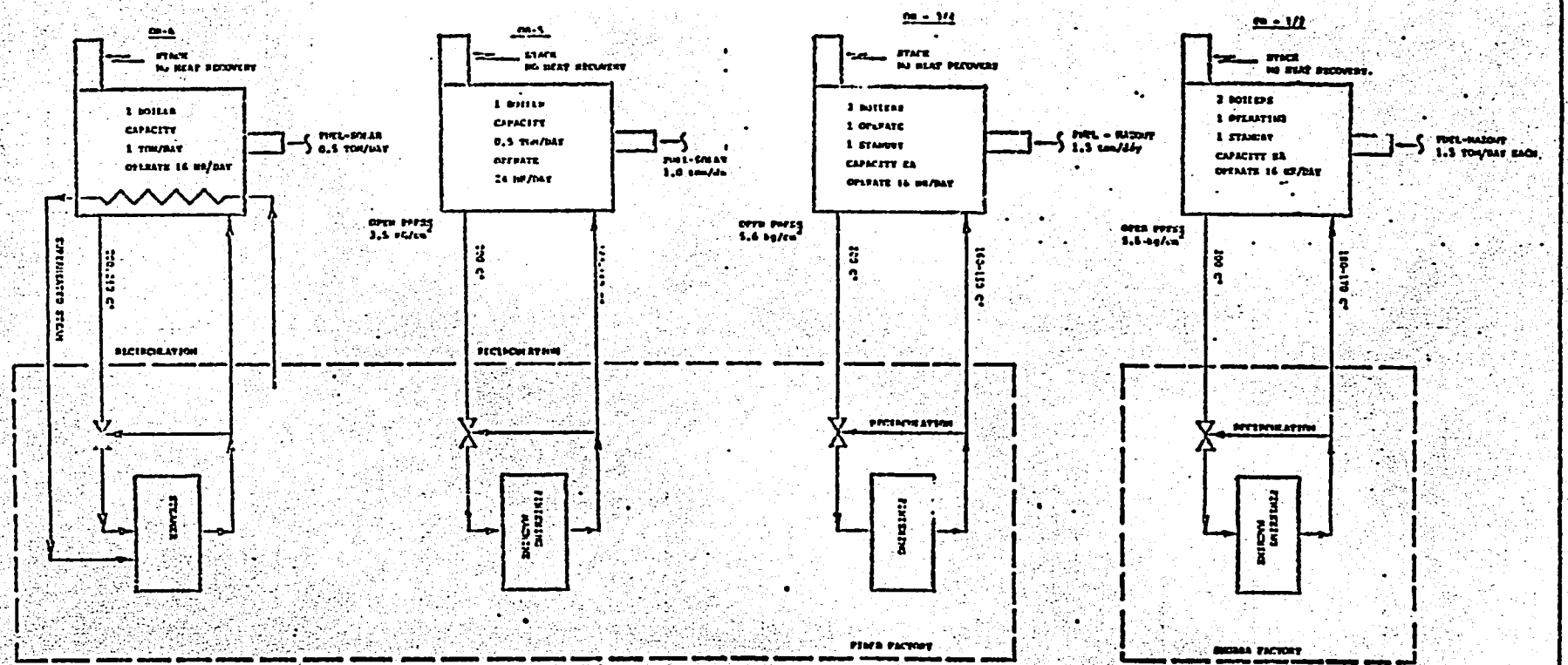

UTILITY FLOW DIAGRAM
CAIRO DYEING AND FINISHING CO.
SINGER/FINISH FACTORY
HOT OIL SYSTEM

Jan. 6, 1999

APPENDIX "D"

EQUIPMENT LIST

FOSTER WHEELER ENERGY CORP.
PROCESS PLANTS DIVISION

CONTRACT:
SECTION:

EQUIPMENT LIST

NAME OF UNIT: SHOBRA FACTORY

CLIENT:
LOCATION: CAIRO, EGYPT

REVISION	ORIGINAL	1	2	3	4	5
DATE	1/6/85					

CLASS	ITEM NO.	DESCRIPTION	EFD	REQ'N. NO	P. O. NO.	REV.
SINGEING	SG-1	SINGEING MACHINE				
	SG-2	↓ ↓				
WASHING	W-1	WASHING MACHINE				
	W-2	↓ ↓				
	W-3					
	W-4	↓ ↓				
SATURATORS	SAT-1	SATURATOR MACHINE				
	SAT-2	↓ ↓				
	SAT-3					
J Box	J-1	J BOX				
	J-2	↓ ↓				
	J-3					
FLATTENING	FL-1	FLATTENING MACHINE				
MANGLE	WM-1	WATER MANGLE				
	WM-2	↓ ↓				
DRYING	DR-1	DRYING MACHINE				
	DR-2	↓ ↓				
	DR-3					

FOSTER WHEELER ENERGY CORP.
PROCESS PLANTS DIVISION

CONTRACT:
SECTION:

EQUIPMENT LIST

NAME OF UNIT: SHOBRA FACTORY

CLIENT:
LOCATION: CAIRO EGYPT

REVISION	ORIGINAL	1	2	3	4	5
DATE	1/6/65	1/9/65	1/15/65			

CLASS	ITEM NO.	DESCRIPTION	REQD	RECD	P.O. NO.	REV
WIDTH TENSIONING	WT-1	WIDTH TENSIONING MACHINE				
	WT-2					
FOLDING	FD-1	FOLDING MACHINE				
DOUBLING	DB-1	DOUBLING MACHINE				
	DB-2					
	DB-3					
	DB-4					
	DB-5					
	DB-6					
	DB-7					
	DB-8					
PRINTING	PR-1	PRINTING MACHINE				
	PR-2					
	PR-3					
FINISHING	FN-1	FINISHING MACHINE				
	FN-2					
	FN-3					

FOSTER WHEELER ENERGY CORP.
PROCESS PLANTS DIVISION

CONTRACT:
SECTION:

EQUIPMENT LIST

NAME OF UNIT: SHOBRA FACTORY

CLIENT:
LOCATION: CAIRO, EGYPT

REVISION	ORIGINAL	1	2	3	4	5
DATE	1/6/65	1/9/85	1/15/85			

CLASS	ITEM NO.	DESCRIPTION	REQ	RECO'N. NO	P. O. NO.	REV.
STEAMER	STM-1	STEAMER MACHINE				
	STM-2	↓ ↓				
CALENDER	CL-1	CALENDER MACHINE				
	CL-2					
	CL-3					
	CL-4					
	CL-5	"				
	CL-6	↓ ↓				
PALETTING	PL-1	PALETTING MACHINE				
	PL-2	↓ ↓				
DYEING	DJ-1	DYE JIGGER MACHINE				
	DJ-2					
	DJ-3					
	DJ-4					
	DJ-5					
	6					
	7					
	8	↓ ↓ ↓				

FOSTER WHEELER ENERGY CORP.
PROCESS PLANTS DIVISION

CONTRACT:
SECTION:

EQUIPMENT LIST

NAME OF UNIT: SHOBRA FACTORY

CLIENT:

LOCATION: CAIRO, EGYPT

REVISION	ORIGINAL	1	2	3	4	5
DATE	1/6/85	1/15/85				

CLASS	ITEM NO.	DESCRIPTION	EFD	DWG. NO	P. O. NO.	REV
DYEING (CONT'D)	DJ-9	DYE JIGGER MACHINE				
	DJ-10	↓				
RAISING	R-1	RAISING MACHINE				
	R-2					
	R-3					
	R-4					
	R-5					
	R-6					

FOSTER WHEELER ENERGY CORP.
PROCESS PLANTS DIVISION

CONTRACT:
SECTION:

EQUIPMENT LIST

NAME OF UNIT: FIBER FACTORY

PAGE 1 OF 2

CLIENT:
LOCATION: CAIRO, EGYPT

REVISION
DATE
ORIGINAL 1/9/85

1	2	3	4	5

CLASS	EQ. NO.	DESCRIPTION	EFD	REQ'N. NO	P. O. NO.	REV.
SINGEING	SG-1	SINGEING MACHINE				
CHEMICAL ADDITION	C-1	CHEMICAL ADDITION TANK				
WASHING	W-1	WASHING MACHINE				
	W-2	↓ ↓				
	W-3					
	W-4					
SATURATORS	SAT-1	PRIMARY SATURATOR				
	L-1	SECONDARY SATURATOR L BOX				
	S-3	SATURATOR 1ST STAGE				
	L-21	SATURATOR 2ND STAGE L BOX				
DRYING	DR-1	DRYING MACHINE				
MERCERIZING	MR-1	MERCERIZING MACHINE				
WIDTH TENSIONING	WT-1	WIDTH TENSIONING MACHINE				
PRINTING	PR-1	PRINTING MACHINE				
	PR-2	↓ ↓				
STEAMER	STM-1	STEAMER				
FINISHING	FN-1	FINISHING MACHINE				
	FN-2	↓ ↓				

FOSTER WHEELER ENERGY CORP.
PROCESS PLANTS DIVISION

CONTRACT:
SECTION:

EQUIPMENT LIST

NAME OF UNIT: FIBER FACTORY

CLIENT:
LOCATION: CAIRO EGYPT

REVISION :	ORIGINAL	1	2	3	4	5
DATE	1/8/85	1/15/85				

CLASS	ITEM NO.	DESCRIPTION	EFD	REQ'N. NO	P. O. NO.	REV
CALENDERS	CL-1	CALENDER MACHINE				
	CL-2	↓				
DOUBLING	DB-1	DOUBLING MACHINE				
THERMOSOL	TH-1	THERMASOL MACHINE				
DYEING	JD-1	JET DYEING MACHINE				
	JD-2	↓				
	JD-3	↓				
	JD-4	↓				
	JD-5	↓				
	JD-6	↓				
	DJ-1	DYE JIGGER MACHINE				
	DJ-2	↓				
	DJ-3	↓				

FOSTER WHEELER ENERGY CORP.
PROCESS PLANTS DIVISION

CONTRACT:
SECTION:

EQUIPMENT LIST

NAME OF UNIT: UTILITIES

CLIENT:

LOCATION: CAIRO EGYPT

REVISION	ORIGINAL
DATE	1/8/85

1	2	3	4	5

CLASS	ITEM NO.	DESCRIPTION	EFD	REQ'N. NO	P. O. NO.	REV.
STEAM GENERATORS	SG-1	STEAM GENERATOR				
	SG-2	↓ ↓				
OIL BOILERS	OB-1	OIL BOILER				
	OB-2	↓ ↓				
	OB-3					
	OB-4					
	OB-5					
	OB-6	↓ ↓				
WATER TREATING	WT-1	WATER TREATING UNIT				
DEAERATOR	DE-1	DEAERATOR				
TANKS	TK-1	WATER TANK				
PUMPS	P-1	WELL WATER PUMP				
	P-2	↓ ↓ ↓				
	P-3					
	P-4	WATER TREATING PUMP				
	P-5	↓ ↓ ↓				
	P-6	DEAERATOR FEED PUMP				
	P-7	↓ ↓ ↓				

FOSTER WHEELER ENERGY CORP.
PROCESS PLANTS DIVISION

CONTRACT:
SECTION:

EQUIPMENT LIST

NAME OF UNIT: UTILITIES

CLIENT:
LOCATION: CAIRO, EGYPT

REVISION	ORIGINAL	1	2	3	4	5
DATE	1/8/85					

CLASS	ITEM NO.	DESCRIPTION	EFD	REQ'N. NO	P. O. NO.	REV.
PUMPS (CONT'D)	P-8	BOILER FEED PUMPS				
	P-9	↓ ↓ ↓				

APPENDIX "E"

SUPPLEMENTARY ECO DATA

1. Form a committee to plan and implement ECO's
   Pages 271 through 328
   See ECO #CD-A-19

2. Publicity to make employees aware of importance of energy conservation
   Pages 329 through 333
   See ECO #CD-A-20

- Dyebath reuse
  Pages 334 through 356
  See ECO #CD-A-9

Section 2

ENERGY CONSERVATION PROGRAM IMPLEMENTATION

TABLE OF CONTENTS

2.0 Introduction 2-1
2.1 Program outline 2-1
2.2 Format and contents 2-4
2.3 Plant Manager Takes First Action
  2.3.1 Letter to department heads from plant manager organizing an energy conservation committee and defining its responsibilities 2-5
  2.3.2 Bulletin from plant manager to all employees announcing energy conservation program 2-7
2.4 First meeting of energy conservation committee 2-8
  2.4.1 Coordinator's letter presented to committee members at first meeting proposing assignments 2-9
2.5 Second meeting of energy conservation committee 2-11
  2.5.1 Agenda for second committee meeting 2-12
  2.5.2 Letter discussing plans for first energy saving-survey and attached survey report form 2-13
  2.5.3 Letter proposing future surveys 2-15
  2.5.4 Report on energy equivalents and costs for plant utilities 2-18
  2.5.5 Report on present and projected cost of fuel and electric power 2-20
  2.5.6 Report on quantities of purchased fuel and electric power used each month in 1973 and 1974 2-21
  2.5.7 Letter proposing a system for developing the energy unit ratio, Btu per unit of production, and a tracking chart form 2-23
2.6 First energy saving survey 2-34
  2.6.1 Plant manager's letter to department heads endorsing the first energy-saving survey of wastes 2-35
  2.6.2 Energy-saving survey team's letter to department heads submitting the timetable for the first survey 2-36
  2.6.3 Survey team's report of findings in first survey 2-37
  2.6.4 Survey team's letter suggesting supervisor training in energy conservation 2-39
2.7 Third meeting of the energy conservation committee 2-40
  2.7.1 Agenda for third committee meeting 2-41
  2.7.2 Manager's letter regarding capital project reviews for efficient utilization of energy 2-42
  2.7.3 Coordinator's letter submitting forms for list of energy-saving projects and a project evaluation summary form 2-43
  2.7.4 Letter about communication of ways to save energy 2-48
  2.7.5 Coordinator's letter about a continuing program with attachments showing planned activities for each month for the rest of the year. 2-50
2.8 Conclusion 2-53
  2.8.1 Manager's letter demonstrating his continuing concern about energy conservation and requesting a contingency plan 2-54
  2.8.2 Report on contingency plan status 2-56

2. ENERGY CONSERVATION PROGRAM IMPLEMENTATION

2.0. INTRODUCTION

This section of the kit describes the initiation and implementation of an energy conservation program. Section 2.1 is an outline of the elements of a program. It may be used as a guide to design your own program, tailored to your company's requirements and capabilities.

For those interested in more detail, the remainder of Section 2, starting with 2.2, illustrates the important steps in the program by a series of memoranda based on the internal correspondence generated in several actual energy conservation programs. Many of these communications could be accomplished verbally at staff meetings and committee meetings and then be documented in minutes. All of your needs may not be anticipated and some of the actions illustrated may not be necessary or appropriate for your management structure but you will find illustrated in this section most of the necessary communications. Suggested methods and forms for recording and reporting plant survey data and for tracking the progress of the program are included.

The memoranda are based on a hypothetical company, the ECONERGY Company, which has two production departments, a utilities department, a maintenance department, and an administrative services department responsible for the purchasing, accounting, shipping, and receiving functions.

The formal organization chart for the ECONERGY Company is shown below for reference. The names shown beneath the department blocks are the names of members of the Energy Conservation Committee.

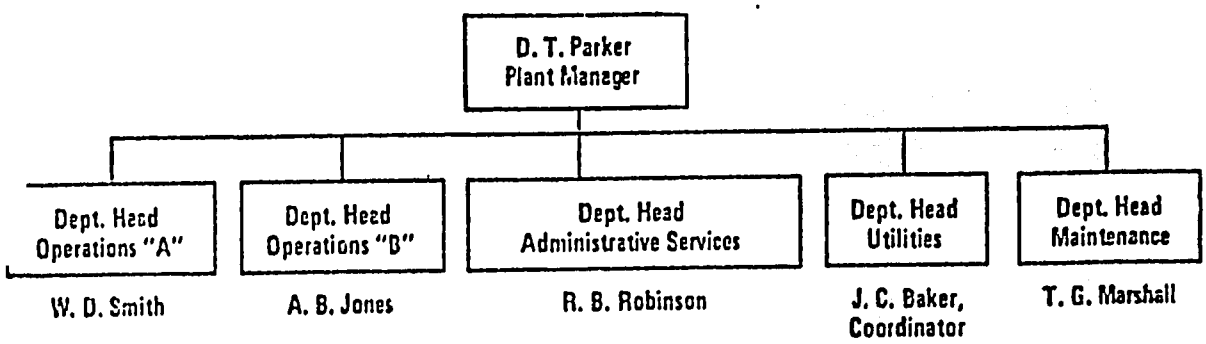

2.1 PROGRAM OUTLINE

	Reference Section
I. TOP MANAGEMENT COMMITMENT	
A. Inform line supervisors of:	2.3.1
1. The economic reasons for the need to conserve energy	
2. Their responsibility for implementing energy saving actions in the areas of their accountability	
B. Establish a committee having the responsibility for formulating and conducting an energy conservation program and consisting of:	2.3.1
1. Representatives from each department in the plant	
2. A coordinator appointed by and reporting to management	
Note: In smaller organizations, the manager and his staff may conduct energy conservation activities as part of their management duties.	
C. Provide the committee with guidelines as to what is expected of them:	2.3.1
1. Plan and participate in energy saving surveys	
2. Develop uniform record keeping, reporting, and energy accounting	

	Reference Section
3. Research and develop ideas on ways to save energy	
4. Communicate these ideas and suggestions	
5. Suggest tough, but achievable, goals for energy saving	
6. Develop ideas and plans for enlisting employee support and participation	
7. Plan and conduct a continuing program of activities to stimulate interest in energy conservation efforts	
D. Set goals in energy saving:	
1. A preliminary goal at the start of the program	
2. Later, a revised goal based on savings potential estimated from results of surveys	
E. Employ external assistance in surveying the plant and making recommendations, if necessary	6.2
F. Communicate periodically to employees regarding management's emphasis on energy conservation action and report on progress	2.8.1, 2.3.2
II. SURVEY ENERGY USES AND LOSSES	
A. Conduct first survey aimed at identifying energy wastes that can be corrected by maintenance or operations actions, for example:	2.5.2, 2.6.1, 2.6.2, 2.6.3
1. Leaks of steam and other utilities	
2. Furnace burners out of adjustment	
3. Repair or addition of insulation required	
4 Equipment running when not needed	
B. Survey to determine where additional instruments for measurement of energy flow are needed and whether there is economic justification for the cost of their installation	2.5.3
C. Develop an energy balance on each process to define detail:	2.5.3
1. Energy input as raw materials and utilities	
2. Energy consumed in waste disposal	
3. Energy credit for by-products	
4. Net energy charged to the main product	
5. Energy dissipated or wasted	
Note: Energy equivalents will need to be developed for all raw materials, fuels, and utilities, such as electric power, steam, etc., in order that all energy can be expressed on the common basis of Btu units.	2.5.4
D. Analyze all process energy balances in depth:	2.5.3
1. Can waste heat be recovered to generate steam or to heat water or a raw material?	
2. Can a process step be eliminated or modified in some way to reduce energy use?	
3. Can an alternate raw material with lower energy content be used?	
4. Is there a way to improve yield?	
5. Is there justification for:	
a. Replacing old equipment with new equipment requiring less energy?	
b. Replacing an obsolete, inefficient process plant with a whole new and different process using less energy?	
E. Conduct weekend and night surveys periodically	2.7.5 2.5.2
F. Plan surveys on specific systems and equipment, such as:	2.5.3
1. Steam system	
2. Compressed air system	
3. Electric motors	
4. Natural gas lines	
5. Heating and air conditioning system	
III. IMPLEMENT ENERGY CONSERVATION ACTIONS	
A. Correct energy wastes identified in the first survey by taking the necessary maintenance or operation actions	2.6.3
B. List all energy conservation projects evolving from energy balance analyses, surveys, etc. Evaluate and select projects for implementation:	

	Reference Section
1. Calculate annual energy savings for each project	
2. Project future energy costs and calculate annual dollar savings	
3. Estimate project capital or expense cost	
4. Evaluate investment merit of projects using measures, such as return on investment, etc.	
5. Assign priorities to projects based on investment merit	
6. Select conservation projects for implementation and request capital authorization	
7. Implement authorized projects	
C. Review design of all capital projects, such as new plants, expansions, buildings, etc., to assure that efficient utilization of energy is incorporated in the design.	2.7.2
Note: Include consideration of energy availability in new equipment and plant decisions.	
IV. DEVELOP CONTINUING ENERGY CONSERVATION EFFORTS	
A. Measure results:	2.5.7
1. Chart energy use per unit of production by department	2.5.6
2. Chart energy use per unit of production for the whole plant	
Note: The procedure for calculating energy consumption per unit of product is presented in "How to Profit by Conserving Energy"	2.5.7
3. Monitor and analyze charts of Btu per unit of product, taking into consideration effects of complicating variables, such as outdoor ambient air temperature, level of production rate, product mix, etc.	
a. Compare Btu/product unit with past performance and theoretical Btu/ product unit	
b. Observe the impact of energy saving actions and project implementation on decreasing the Btu/unit of product	
c. Investigate, identify, and correct the causes for increases that may occur in Btu unit of product, if feasible	
B. Continue energy conservation committee activities	2.7.5
1. Hold periodic meetings	
2. Each committee member is the communication link between the committee and the department supervisors represented	
3. Periodically update energy saving project lists	
4. Plan and participate in energy saving surveys	
5. Communicate energy conservation techniques	
6. Plan and conduct a continuing program of activities and communication to keep up interest in energy conservation	
7. Develop cooperation with community organizations in promoting energy conservation	
C. Involve employees	2.7.5
1. Service on energy conservation committee	2.7.4
2. Energy conservation training course	2.6.4
3. Handbook on energy conservation	
4. Suggestion awards plan	
5. Recognition for energy saving achievements	
6. Technical talks on lighting, insulation, steam traps, and other subjects	
7. "savEnergy" posters, decals, stickers	
8. Publicity in plant news, bulletins	
9. Publicity in public news media	
10. Letters on conservation to homes	
11. Talks to local organizations	
D. Evaluate program	
1. Review progress in energy saving	
2. Evaluate original goals	
3. Consider program modifications	
4. Revise goals, as necessary	

2.2 FORMAT AND CONTENTS

Throughout this section, the letters, reports, forms, and meeting agendas are in time sequence. Where appropriate, there are comments or explanations which relate to the following memoranda.

Energy costs and cost projections, quantities of energy, and equivalent energy factors for utilities have been left as blanks, rather than stated numerically, in order to avoid any implication that the figures are typical. Such numbers will vary from industry to industry, plant to plant, and region to region. Each plant must make its own determination of these figures.

Names of individuals and of the company are, of course, fictitious.

Please note the definitions of the following symbols used in this section:

k = thousand or kilo
M = million or mega

2.3 PLANT MANAGER TAKES FIRST ACTION

The plant manager has decided that energy conservation must become a specific part of the company management program. He takes action by appointing an energy conservation coordinator and requesting the head of each department to select someone to work with the coordinator. His actions are expressed in the following memoranda.

2.3.1

ECONERGY COMPANY **INTER-OFFICE CORRESPONDENCE**

Date: January 7, 1974

To: Department Heads

From: D. T. Parker, Plant Manager

Subject: Formation of Energy Conservation Committee

The rising costs of energy and the allocations brought about by shortages have become a problem of increasing concern. The need for energy conservation has been discussed in previous staff meetings, but frankly we are not getting the results we want.

Many companies achieved 5 to 10% savings in energy usage last year by implementing formal energy conservation programs. Our plant uses _____ million Btu of energy yearly and our annual bill for purchased fuel and electric power is about $_____ at current energy prices. If we could achieve, for example, a 10% cut in our annual consumption, that would be a savings of $_____ -- an appreciable amount of money. Consider also that energy costs are rising at a rate of about _____% per year.

We must initiate an aggressive energy conservation program at once. We need to establish a committee with the responsibility for formulating and conducting the program. I am appointing J. C. Baker to the fulltime responsibility as committee coordinator, reporting directly to me, and I am asking that by one week from today each of you assign someone to represent your department on the committee. That person should be knowledgeable and influential. He will be the communication link between the committee and the key supervisors in your areas. Appointment to this committee will be considered a major assignment requiring a significant amount of time, particularly during the early stages of the energy conservation program.

savEnergy

We expect the committee to research and come up with ideas, to establish an energy conservation goal, to communicate suggestions on ways of achieving that goal, to develop a common economic base to work from, and to do some record keeping. The committee will need to compile lists of energy conservation projects, their costs and benefits so that we can plan our expenditures. It will be the line supervisors, however, who must see to it that actions are taken to accomplish energy conservation.

I suggest that a good way to kick off the program would be to conduct surveys throughout our plant - tracing out the energy streams to identify where our energy is used so that wasted energy can be reduced or eliminated. Fixing leaks of steam and other utilities, adjusting furnace burners, repairing steam traps, and repairing or adding insulation are some of the maintenance and operating actions we can take immediately to start realizing energy savings. The Energy Conservation Program Guide for Industry and Commerce (EPIC) published by the U. S. Department of Commerce will provide the guidance for developing our program.

I am thoroughly convinced that the continuing success of our company requires that we use our energy supplies as effectively as possible. The success of our program will depend upon the support and interest that we, as management, demonstrate.

I think we should set a tough, achievable goal for ourselves. Let's set an initial target of 10% savings in energy this year. This goal can be revised after we conduct our surveys and estimate the actual potential savings.

2.3.2

ECONERGY COMPANY

EMPLOYEE BULLETIN

Date: January 15, 1974

To: All Employees

From: D. T. Parker, Plant Manager

Subject: Initiation of Energy Conservation Program

Television, radio and newspapers are filled with reports on the energy shortages. This problem has implications far beyond the inconvenience we experience at our local gasoline service stations. This energy problem has a potentially serious impact on American industry, including the ECONERGY Company.

Not only are the costs of purchasing electricity and fuels soaring but the availability of our vital raw materials is declining as a result of the energy shortages. To avoid production disruptions which may result from these shortages, the ECONERGY Company is initiating a far-reaching Energy Conservation Program (ECP) to identify and eliminate inefficient, unnecessary, or wasteful uses of energy throughout the plant.

To accomplish this task I have appointed Mr. J. C. Baker, Utilities Department, to head the Energy Conservation Committee. This Committee will formulate a program which will enable us to reduce our energy consumption without disruption to our production flow. The support and active participation of every employee is essential if we are to achieve our goal of 10% savings in energy use this year.

You will soon be seeing signs that say "savEnergy." This is more than a catchy slogan: it is a reminder that energy will always be available at home and at work if we are careful in the ways we use it.

savEnergy

2.4 FIRST MEETING OF ENERGY CONSERVATION COMMITTEE

As soon as the committee coordinator learns of his new assignment, he starts planning how the committee can go about accomplishing the tasks set forth in the plant manager's letter (2.3.1). When he has the names of all members of the committee and a plan in mind, he calls a meeting of the committee and submits to them the proposed plan in the following letter.

For simplification, we are assuming that the plan and assignments were accepted by the committee and no additional topics were discussed. However, if the committee agreed on some changes to the plan and/or talked about other matters, minutes of the meeting would be written and copies given to committee members.

ECONERGY COMPANY

INTER-OFFICE CORRESPONDENCE

Date: January 18, 1974

To: W. D. Smith, Operations "A"
A. B. Jones, Operations "B"
T. G. Marshall, Maintenance
R. B. Robinson, Administrative Services

From: J. C. Baker
Energy Conservation Coordinator

Subject: Committee Assignments

D. T. Parker's letter dated January 7, 1974 outlines the formation of the Energy Conservation Committee, to which we have been appointed, and indicates some of the actions we are to undertake. As he suggests, each of us should become thoroughly familiar with the program suggestions and energy conservation opportunities described in EPIC.

We must get started on several of the tasks immediately, so I have developed a plan for dividing these duties among us. The first priority is to conduct a survey of present energy usage and to begin reducing or eliminating waste. Because of their familiarity with these problems, our operations representatives, W. D. Smith and A. B. Jones, should be responsible for developing a plant-wide plan for energy saving surveys.

Another area that requires early attention is the establishment of a common economic base from which to work. There will be energy saving projects that will involve dollar expenditures which require financial justification. We need a uniform method of calculating the value of savings for our various forms of energy - electric power, fuel, steam, and compressed air. As Utilities representative, I will undertake this task.

I would appreciate it if R. B. Robinson of Administrative Services could obtain from Accounting data on the quantities of purchased fuel and electric power used monthly last year and this year. A continuing plot of energy consumption per unit of production is necessary to help us monitor the progress in our plant-wide energy conservation effort.

savEnergy

In addition, we need to consider projected energy costs. So, would R. B. Robinson also please ask the Purchasing Section if they can develop fuel and electric power cost projections for this year, three years and five years into the future.

We are going to need to communicate ideas and suggestions on energy conservation techniques applicable to our plant. Since T. G. Marshall of Maintenance has had broad experience throughout the plant, I am asking that he assume responsibility for coordinating this function. To start with, we have several literature references and the Energy Conservation Opportunities (ECO's) in EPIC. As time goes along, we surely will have generated additional ideas deserving of broad communications through our committee.

If all of you are in agreement with this plan, I suggest that each of us meet with the key supervisors in our areas this week to inform them of our program plans and to ask them to come up with energy saving projects.

Let us meet again in my office one week from today, at the same time, to report our progress. If you are unable to attend that meeting or any future meeting, please ask an alternate to attend in your place.

cc: D. T. Parker
Plant Manager

2.5 SECOND MEETING OF ENERGY CONSERVATION COMMITTEE

The week passes and the committee holds its second meeting. The coordinator gives each member a copy of the agenda shown on the next page. Then, in the sequence of the agenda, each member presents his report, giving a copy of his letter and attachments to all present. The following six letters document the reports and proposals submitted at the meeting. It is assumed that all these matters were accepted or approved by the committee.

Note that in Section 2.5.4, and elsewhere in EPIC, a ratio of 10,000 Btu/kWh is used for illustrative purposes for the energy used by a utility to generate electricity. According to the Federal Power Commission, the national average for 1972 was approximately 12,000 Btu/kWh. This figure will vary from region to region, however.

2.5.1

ECONERGY COMPANY

INTER-OFFICE CORRESPONDENCE

Date: January 25, 1974

To: Energy Conservation Committee

From: J. C. Baker, Coordinator

Subject: Agenda for Second Meeting of the Energy Conservation Committee

1. Report of plans for energy saving surveys
2. Energy equivalents for plant utilities
3. Present and projected future costs of energy
4. Monthly energy use for 1973 and 1974
5. Proposed forms:
   a. Calculation of Btu per unit of production
   b. Tracking chart

cc: D. T. Parker
Plant Manager

2.5.2

ECONERGY COMPANY **INTER-OFFICE CORRESPONDENCE**

e: January 25, 1974

J. C. Baker, Energy Conservation Coordinator
T. G. Marshall, Maintenance
R. B. Robinson, Administrative Services

m: Energy Saving Survey Team
W. D. Smith, Operations "A"
A. B. Jones, Operations "B"

ject: Plans for First Energy Saving Survey

The first survey will be aimed at identifying energy wastes that can be corrected by maintenance or operations actions. The attached survey form indicates the types of wastes we will be looking for. In addition, we will refer to the Energy Conservation Checklist in EPIC. All process areas and buildings will be included in the survey. The main part of the survey will be conducted during normal daytime work hours, but one or more night visits will be required to search for excess nighttime lighting and HVAC (heating, ventilating, and air conditioning), as well as equipment running when not needed. Areas or buildings that are in a full or partial shutdown condition on weekends will warrant weekend visits to look for energy use that is not necessary.

The survey team proposes to conduct the survey of each area in cooperation with and accompanied by a foreman, supervisor, or engineer designated by the department head. Findings of the survey of each area will be recorded on the attached form and copies will be made available to the department head, the maintenance department, and the Energy Conservation Committee.

Work orders for correction of energy wastes will be prepared by department supervisors, as is the case for any other maintenance work.

This week, the survey team will prepare a timetable for visits to the various areas and communicate the schedule to department heads.

By copy of this letter to Mr. Parker we are requesting management endorsement of our plans for this first energy survey.

cc: D. T. Parker, Plant Manager

savEnergy

ENERGY SAVING SURVEY

Department: _____

Date: _____

Surveyed by: _____

Fuel Gas or Oil Leaks	Steam Leaks	Compressed Air Leaks	Condensate Leaks	Water Leaks	Damaged or Lacking Insulation	Excess Lighting	Excess Utility Usage	Equipment Running & Not Needed	Burners Out of Adjustment	Leaks of or Excess of HVAC	Location	Date Corrected

2.5.3

ECONERGY COMPANY

INTER-OFFICE CORRESPONDENCE

Date: January 25, 1974

To: J. C. Baker, Energy Conservation Coordinator
T. G. Marshall, Maintenance
R. B. Robinson, Administrative Services

From: Energy Saving Survey Team
W. D. Smith, Operations "A"
A. B. Jones, Operations "B"

Subject: Future Energy Savings Surveys

After our first energy saving survey, which is aimed at correction of the more obvious energy losses, there are other surveys which we feel certain will reveal additional ways to reduce energy consumption but which probably will require capital investment.

1. The Energy Balance

The basic data needed for energy conservation efforts is an energy balance on each process and department. This study can be done by an engineer in the department concerned, who is thoroughly familiar with the process flow sheet or the building energy uses. The object is to define in detail the energy input, energy utilized, and energy dissipated or wasted. In some areas this will require improving measuring capability. The cost of this additional measuring capability must be weighed against the potential savings. An example is shown on the following energy flow diagram for a steam generating unit. Having identified the individual energy wastes, the engineer can then determine methods for reducing or using these energy wastes. (The ECO Checklist in EPIC can be helpful.) The engineer's next task is to evaluate the alternate methods and recommend the best one.

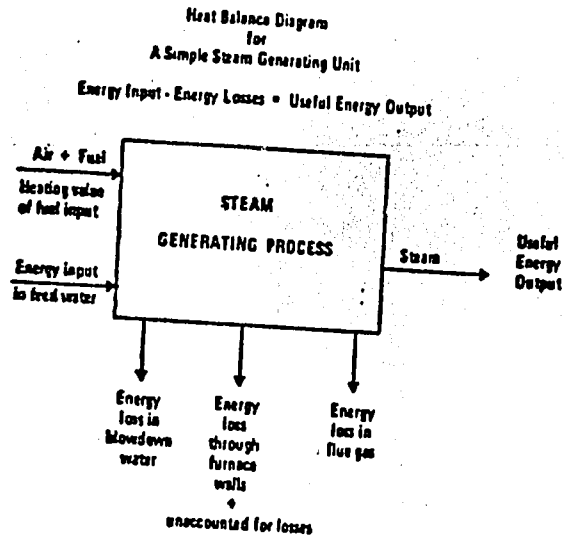

2. Energy Surplus Survey

After the energy balances have been completed, some coordination by the survey team is indicated. The survey team can contact the engineers who have prepared the energy balances to determine if there are energy wastes that could be recovered economically but have no use within their process area. Let's say that there is potential for recovering waste heat from furnace flue gases by using it to (a) preheat combustion air or (b) generate low pressure steam. Suppose that air preheat is impractical because of furnace construction and there is no use for low pressure steam within that department. The survey team can communicate through the energy conservation committee to other departments and perhaps find a use for the low pressure steam.

3. Survey of Pressure Reducing Stations

Determine location of all steam and high pressure gas, pressure-reducing valves, upstream and downstream pressures, and flow rates. Evaluate feasibility of letting pressure down by flowing through an expander driving some equipment, such as a pump or compressor.

4. Survey of Compressed Air Pressure Requirements

Survey all users of plant air to find minimum pressure levels required. Lowering compressor discharge pressure saves energy. If all but one or two users can be satisfied with a lower pressure, an evaluation of the feasibility of installing a separate compressor or a booster to supply these higher pressure users should be made.

savEnergy

5. Steam System Survey

a. Traps

Review all steam trap installations. Are there too many traps on a line? Or too few? Of an efficient type? Or inefficient? Are traps sized properly? Installed properly? Are they functioning as they should? Should traps receive special maintenance attention?

b. Increase Condensate Return to Boilers

Loss of condensate is a waste of heat and of valuable high purity water. Identify all sources of condensate and evaluate economic feasibility of installing pump and insulated piping to return condensate to boiler feedwater tank. If condensate is contaminated, evaluate possible clean-up.

c. Use of Lower Pressure Steam

Search for situations where use of high pressure steam can be switched over feasibly to lower pressure steam. It is advantageous to use the lower pressure steam where the higher pressure is not needed. This is particularly true when the lower pressure steam is being supplied from extraction or back-pressure turbines or a low pressure boiler separate from the high pressure boiler. Of course, lowering pressure by a pressure reducing valve offers no savings in energy.

6. Survey for Oversized Electric Motors and Equipment

Electric motors and equipment, such as centrifugal pumps, operate with best efficiency at rated load. If they are operating at reduced load, efficiency suffers. Take ampere readings on motors and compare to rating. Evaluate replacement of oversized motors and equipment with proper sizes.

7. Insulation

Inspect insulation and furnace walls with infrared scanners to detect excessive heat losses. Repair insulation and walls where needed.

8. Combustion Survey

Determine combustion efficiency in all furnaces. Evaluate economic feasibility of replacing burners with more efficient type and installing oxygen and combustibles analyzers on flue gas along with improved combustion control system to maintain optimum excess air.

cc: D. T. Parker
Plant Manager

savEnergy

ECONERGY COMPANY

INTER-OFFICE CORRESPONDENCE

Date: January 25, 1974

To: W. D. Smith, Operations "A"
A. B. Jones, Operations "B"
T. G. Marshall, Maintenance
R. B. Robinson, Administrative Services

From: J. C. Baker, Energy Conservation Coordinator

Subject: Energy Equivalents and Costs for Plant Utilities

We need a uniform method for calculating the value of our energy savings for our various utilities and I recommend we institute an accounting system based on Btu usage. For our purchased electric power, dollar accounting is simply a matter of using the ¢/kWh rate(s) we pay the utility company. The matter is more involved, however, for our Btu accounting of electric power. One kWh is capable of producing 3412 Btu of heat. But due to power plant inefficiency, approximately 10,000 Btu of fuel are burned by the utility company to generate one kWh. Therefore, the "energy equivalent" for electric power is:

10,000 Btu/kWh

Following this example then, an "energy equivalent" may be defined as the number of Btu of fuel that are consumed in generating a unit of utility, such as a kWh of electricity or 1000 lb of steam. Defined this way, the "energy equivalent" is the factor we can use across the board to put all projects on a common base in our energy conservation program.

Next let us consider the fuels that we purchase. The energy equivalent is the heat of combustion. The unit cost comes from accounting.

Fuel	Cost	Energy Equivalent	Cost/MBtu
Natural Gas	$_____/1000 cu ft	_____Btu/cu ft	$_____/MBtu
Fuel Oil	$_____/gal	_____Btu/gal	$_____/MBtu
Coal	$_____/ton	_____Btu/lb	$_____/MBtu

The costs of our generated steam, compressed air, water and treated boiler make-up water published by our accounting department include depreciation, maintenance and operating costs, etc., and therefore cannot be used in figuring dollar value of energy saving. When we save these utilities we save only the fuel or electric power that was used to generate, compress or pump the utilities. In our boilers generating 400 psig and 150 psig steam, the energy equivalents of steam are the fuel Btu used in generating steam based on the boiler efficiencies. The steam costs to be used in energy saving accounting are, therefore, the costs of the energy equivalents.

Steam	Cost	Energy Equivalent
400 psig	$_____/1000 lb	_____Btu/1000 lb
150 psig	$_____/1000 lb	_____Btu/1000 lb

With regard to compressed air, water and treated boiler make-up water, the costs are for electric power used for compressing or pumping. The energy equivalents take into account 10,000 Btu/kWh.

Utility	Cost	Energy Equivalent
Compressed Air	$_____/1000 cu ft	_____Btu/1000 cu ft
Water	$_____/1000 lb	_____Btu/1000 lb
Boiler Make-Up Water	$_____/1000 lb	_____Btu/1000 lb

When we save condensate and return it to the boilers, we reduce the boiler make-up water requirement and save the Btu difference between the heat content of the condensate at ____F and of fresh water at its temperature. Thus, our energy equivalent for condensate is ____Btu/1000 lb and its cost is $_____/1000 lb.

cc: D. T. Parker
Plant Manager

savEnergy

2.5.5

ECONERGY COMPANY

INTER-OFFICE CORRESPONDENCE

Date: January 25, 1974

To: J. C. Baker, Energy Conservation Coordinator
W. D. Smith, Operations "A"
A. B. Jones, Operations "B"
T. G. Marshall, Maintenance

From: R. B. Robinson, Administrative Services

Subject: Fuel and Power Cost Projections

The Purchasing Section has provided the following information:

	Cost at Present	Estimated Cost 3 Years	Estimated Cost 5 Years
Electric Power	$____/kWh	$____/kWh	$____kWh
Natural Gas	$____/1000 cu ft	$____/1000 cu ft	$____1000 cu ft
Fuel Oil	$____/gal	$____/gal	$____/gal
Coal	$____/ton	$____/ton	$____/ton

Purchasing has agreed to advise our committee whenever these costs are revised.

cc: D. T. Parker, Plant Manager

ECONERGY COMPANY

INTER-OFFICE CORRESPONDENCE

Date: January 25, 1974

To: J. C. Baker, Energy Conservation Coordinator
W. D. Smith, Operations "A"
A. B. Jones, Operations "B"
T. G. Marshall, Maintenance

From: R. B. Robinson, Administrative Services

Subject: Monthly Use of Fuels and Power - 1973 and 1974

The attached form was developed and submitted to Accounting. They hope to have the information compiled within a few days.

cc: D. T. Parker, Plant Manager

MONTHLY PLANT ENERGY USE

1973	ELECTRIC POWER			NATURAL GAS			FUEL OIL			COAL			TOTAL Btu	Number of Units Produced	Btu Per Unit of Production
	kWh	Btu/kWh	Btu	k cu ft	Btu/k cu ft	Btu	gal	Btu/gal	Btu	TONS	Btu/lb	Btu			
Jan.															
Feb.															
Mar.															
Apr.															
May															
June															
July															
Aug.															
Sep.															
Oct.															
Nov.															
Dec.															
1974															
Jan.															
Feb.															
Mar.															
Apr.															
May															
June															
July															
Aug.															
Sep.															
Oct.															
Nov.															
Dec.															

2.3.7

ECONERGY COMPANY

INTER-OFFICE CORRESPONDENCE

Date: January 25, 1974

To: W. D. Smith Operations "A"
A. B. Jones, Operations "B"
T. G. Marshall, Maintenance
R. B. Robinson, Administrative Services

From: J. C. Baker, Energy Conservation Coordinator

Subject: Department Energy Unit Ratio and Tracking Chart

Attachment A is a copy of the do-it-yourself kit "How to Profit by Conserving Energy" by the Sub-Council on Technology of the National Industrial Energy Conservation Council. The form in the kit details a suggested procedure for calculating the energy content (Btu) of a product.

In our particular operations, we have no by-products, and our energy use for waste disposal is negligible. Therefore, our prime concern is raw material energy and conversion energy. Conversion energy is the energy equivalent of utilities used in manufacturing the product. Raw material energy content can be somewhat more involved. The raw material suppliers may be able to provide this number, or an approximation is available for most materials from the U. S. Department of Commerce. If unavailable from these sources, it can be estimated as the heat of combustion of the material. This estimate is always low. Any energy spent on the raw material in getting it to the point of use should be considered - for example, mining, crushing and sizing, and transportation. Bear in mind that less energy intensive raw materials should escalate less in price as energy costs increase. Having determined the energy content of raw materials, and given a choice, a better raw material selection should be possible.

Attachment B is a three page form for tabulating monthly department use of raw materials and utilities, for calculating Btu content of these quantities, and for determining the total Btu and the energy/production unit ratio in Btu per unit of production. As this information is developed we will probably find that there is a need to install additional metering and to rehabilitate some existing meters, if economically justified.

savEnergy

Attachment C is a graph for plotting the monthly Btu per unit of production for 1973 and 1974. This graph can be used for charting the energy used by individual production departments and also by the total plant.

If you have any questions, see me. These records are important to our on-going program.

cc: D. T. Parker, Plant Manager

savEnergy

ATTACHMENT A

HOW TO PROFIT BY CONSERVING ENERGY

A Do-It-Yourself Kit

SUB-COUNCIL ON TECHNOLOGY OF THE
NATIONAL INDUSTRIAL ENERGY
CONSERVATION COUNCIL

OBJECTIVE Encourage industrial firms to set measurable goals for reducing energy consumption per unit of product produced.

GOAL. X-percent reduction in energy content* expressed in BTU'S per unit of product.

PROCEDURE Use the energy calculator on page two to determine the current energy content in BTU'S per unit for any kind of manufactured or processed product.

With this yardstick, measure progress to determine if energy reduction goals are being met, exceeded or missed.

*Energy content per unit of product includes energy content of the raw material plus energy spent in converting or upgrading and in waste disposal.

"DO IT YOURSELF KIT" For Calculating The Energy Content of A Product

GUIDELINES OF THE NATIONAL INDUSTRIAL ENERGY CONSERVATION COUNCIL
SUGGESTED PROCEDURE FOR CALCULATING ENERGY CONTENT (BTU'S) OF A PRODUCT

FOR THE PERIOD BEGINNING January 1, 1974, PERIOD ENDING February 1, 1974.

COMPANY: The Dow Chemical Co.
RESPONSIBLE MANAGER: I. G. Snyder, Jr.
1 PRODUCT
2 PRODUCT I.D. NO.

RAW MATERIAL ENERGY (LIST MAJOR RAW MATERIALS)

3 TOTAL UNITS PRODUCED
UNITS OF PRODUCTION (LB, GAL, PIECE, ETC.)

4 RAW MATERIAL	5 TOTAL UNITS	X 6 BTU'S UNIT	= 7 TOTAL BTU'S
A:			
B:			
C:			
D:			
E:			

TOTAL BTU'S 8

CONVERSION ENERGY (LIST ALL MAJOR UTILITIES)

9 UTILITY	10 TOTAL UNITS	X 11 BTU'S UNIT	= 12 TOTAL BTU'S
A:			
B:			
C:			
D:			
E:			

TOTAL BTU'S 13

WASTE DISPOSAL ENERGY

14 WASTE	15 TOTAL DISPOSAL BTU'S	17 TOTAL WASTED UNITS
A:		
B:		
C:		
D:		
E:		

TOTAL BTU'S 16

GROSS ENERGY CONTENT OF PRODUCT (SUM OF ITEMS 8, 13 AND 16) BTU'S 18

BY-PRODUCT ENERGY CREDIT (LIST ALL MAJOR BY-PRODUCTS)

19 BY-PRODUCT	20 TOTAL UNITS	X 21 BTU'S UNIT	= 22 TOTAL BTU'S
A:			
B:			
C:			
D:			
E:			

TOTAL BTU'S 23

NET ENERGY CONTENT OF PRODUCT (ITEM 18 LESS ITEM 23) 24 BTU'S

ENERGY CONTENT PER UNIT OF PRODUCTION (ITEM 24 DIVIDED BY ITEM 3) 25 BTU'S UNIT

GOAL (TARGETED ENERGY CONTENT FOR THIS PERIOD) BTU'S UNIT 26

IF ITEM 26 IS EQUAL TO ITEM 25, GOAL WAS MADE (CHECK ITEM 27) 27 ☐ MADE GOAL

IF ITEM 26 IS NOT EQUAL TO ITEM 25, COMPUTE DEVIATION FROM GOAL:

ITEM 26 LESS ITEM 25 28

ITEM 28 DIVIDED BY ITEM 26 29

MULTIPLY ITEM 29 BY 100 30

IF ITEM 26 IS GREATER THAN ITEM 25, COPY ITEM 30 HERE 31+ % BEAT GOAL

IF ITEM 26 IS LESS THAN ITEM 25, COPY ITEM 30 HERE 32− % MISSED GOAL

GUIDE FOR FILLING OUT FORM ON OPPOSITE PAGE

1 Finished product ready for shipment.

2 Product I.D. No. is the numerical identification of the product.

3 Units of the product (item 1) made during this time period.

4 The material that goes into producing and packaging the product (includes fuels used as raw material).

5 Units of the raw material (item 4) that were used during this time period.

6 Every material has a specific energy content. Energy content is measured in terms of BTU'S. Raw material supplier may provide this number or an approximation is available for most materials from the U. S. Department of Commerce. If unavailable from these sources, it can be estimated as the heat of combustion of the material. This estimate is always low.

7 (Item 5) multiplied by (item 6).

9 Utilities include primarily electricity, fuel oil and natural gas.

10 Units of utility (item 9) used during this time period.

11 For fuel, this is the heat of combustion of the fuel. This number is available from supplier. For other utilities, this is the energy necessary to generate one unit of the utility (e.g., 1 KWH). Use 10,000 BTU'S per KWH unless your supplier has a better number.

12 (Item 10) multiplied by (item 11).

14 Waste is that material which has no economic value and which requires additional BTU'S to dispose of.

15 Estimated energy to dispose of the waste (item 14). This may be the energy to truck away and bury a solid, the energy to burn some scrap or the energy to run a waste disposal plant.

17 Units of waste produced during this time period. Units of waste is not needed for the calculation, but may be recorded for later reference.

19 By-products are those saleable materials which are made incidental to the production of the desired product or products.

20 Units of by-product (item 19) made during this time period.

21 The usable energy in the by-product. As an approximation, use the ratio of the value of the by-product to the value of the product multiplied by the gross energy content of the product (item 18).

22 (Item 20) multiplied by (item 21).

"DO IT YOURSELF KIT" For Calculating The Energy Content of A Product

GUIDELINES OF THE NATIONAL INDUSTRIAL ENERGY CONSERVATION COUNCIL
SUGGESTED PROCEDURE FOR CALCULATING ENERGY CONTENT (BTU'S) OF A PRODUCT

FOR THE PERIOD BEGINNING January 1, 1974 PERIOD ENDING February 1, 1974

COMPANY: The Dow Chemical Co.
RESPONSIBLE MANAGER: I. G. Snyder, Jr.
1 PRODUCT: Ethylene
PRODUCT I.D. NO.: 2 007-2[illegible]1

RAW MATERIAL ENERGY (LIST MAJOR RAW MATERIALS)

4 RAW MATERIAL	5 TOTAL UNITS	x 6 BTU'S/UNIT	= 7 TOTAL BTU'S
A: Ethane	52.29×10^6	22,304/lb	1166.3×10^9
B: Caustic Soda	252×10^6	12,500/lb	3.2×10^9
C: Hydrogenation Cat.	6.048×10^3	75,000/lb	5×10^9
D: Desiccant	1.117×10^3	50,000/lb	1×10^9
E:			
TOTAL BTU'S 8			1170.1×10^9

3 TOTAL UNITS PRODUCED: 42,000,000

UNITS OF PRODUCTION (LB, GAL, PIECE, ETC.): Pounds

CONVERSION ENERGY (LIST ALL MAJOR UTILITIES)

9 UTILITY	10 TOTAL UNITS	x 11 BTU'S/UNIT	= 12 TOTAL BTU'S
A: Steam, 150 psig	181.31×10^6	1077/lb	195.3×10^9
B: Electricity, KWH	0.71×10^6	10000 KWH	7.1×10^9
C: Natural Gas, ft.^{3}	1269.4×10^6	1030/ft.^{3}	277.5×10^9
D: Cooling Water, gal.	1764×10^6	10/gal.	17.6×10^9
E: Process Water, gal.	1.974×10^6	15/gal.	Negligible
TOTAL BTU'S 13			497.5×10^9

WASTE DISPOSAL ENERGY

14 WASTE	15 TOTAL DISPOSAL BTU'S	17 TOTAL WASTED UNITS
A: Oily, Caustic Water	Disposal Plant 1.0×10^9	Water: 5.92×10^6 gal.
B:	Muriatic Acid 4.9×10^9	Oil in water: 11,220 lbs.
C:		Muriatic Acid to neutralize
D:		Caustic: 639,120 lbs
E:		
TOTAL BTU'S 16	5.9×10^9	

GROSS ENERGY CONTENT OF PRODUCT (SUM OF ITEMS 8, 13 AND 16) BTU'S 18 1673.5×10^9

BY-PRODUCT ENERGY CREDIT (LIST ALL MAJOR BY-PRODUCTS)

19 BY-PRODUCT	20 TOTAL UNITS	x 21 BTU'S/UNIT	= 22 TOTAL BTU'S
A: Residue Gas	6.048×10^6	20,000	121.0×10^9
B: Pyrolysis Gas	1.722×10^6	17,936	31.0×10^9
C: C_3-C_4 Fraction	2.436×10^6	20,833	50.7×10^9
D:			
E:			
TOTAL BTU'S 23			202.7×10^9 BTU'S

NET ENERGY CONTENT OF PRODUCT (ITEM 18 LESS ITEM 23) 24 1470.8×10^9 BTU'S

ENERGY CONTENT PER UNIT OF PRODUCTION (ITEM 24 DIVIDED BY ITEM 3) 25 35,019 BTU'S/UNIT

GOAL (TARGETED ENERGY CONTENT FOR THIS PERIOD) BTU'S/UNIT 26 35,000

IF ITEM 26 IS EQUAL TO ITEM 25, GOAL WAS MADE (CHECK ITEM 27) ..... 27 ☐ MADE GOAL

IF ITEM 26 IS NOT EQUAL TO ITEM 25, COMPUTE DEVIATION FROM GOAL:

ITEM 26 LESS ITEM 25 ..... 28 431

ITEM 28 DIVIDED BY ITEM 25 ..... 29 0135

MULTIPLY ITEM 29 BY 100 ..... 30 1.35

IF ITEM 26 IS GREATER THAN ITEM 25, COPY ITEM 30 HERE ..... 31 +1.35 % BEAT GOAL

IF ITEM 26 IS LESS THAN ITEM 25, COPY ITEM 30 HERE ..... 32 — % MISSED GOAL

2

4 All significant input materials are listed even though they may not appear in the final product.

5 These quantities of materials were used during January, 1974. The desiccant may be purchased only once every six months, but a proportional amount is allocated to this month.

6 The energy content of ethane is the heat of combustion which is available from several reference books.

The energy content of caustic was estimated from literature sources.

The heat content of the hydrogenation catalyst and the desiccant are educated guesses. The quantities of these materials used are so small that the error introduced by an incorrect guess is insignificant.

11 The BTU'S per unit of steam are available from steam tables. In this case credit was taken for the hot water returned to the steam plant. 10,000 BTU'S/KWH was used since this is close to the energy that an average utility uses to generate a KWH of electricity.

1030 BTU'S/ft^3 of gas was provided by the gas supplier. The energy in the cooling and the process water is the power necessary to pump the water. The power in KWH'S/gallon was multiplied by 10,000 BTU'S/KWH to arrive at the BTU'S per gallon.

15 The oily, caustic water was neutralized and then treated in a bio-oxidation plant. The total disposal BTU'S include the energy to run the bio-oxidation plant plus the energy in the neutralizing agent, muriatic acid.

21 All of the energy contents here were assumed to be equal to the heat of combustion since these materials may be readily burned as fuel. Residue gas was assumed to be the same as light fuel oil, pyrolysis gas was assumed to be the same as toluene and the C_3–C_4 fraction was assumed to be butene.

The basic information in this example was taken from the Stanford Research Institute report on "Ethylene" dated August, 1967, page 219.

WHY MEASURE ENERGY

As energy is used more effectively, product costs can be reduced and profits improved. This can be accomplished even in the face of sharply increasing energy costs. Since industrial energy consumption accounts for approximately 40% of total energy used in the United States, significant contributions can be made to the national effort.

The first step to meaningful energy conservation is measurement of all the energy that enters and leaves a plant during a given period. This measurement will probably be an approximation at first but should improve with experience.

To calculate the energy content of your products, use the attached form, and then set goals for improvement. The filled in example is for ethylene; but the procedure applies equally well to any manufacturing operation, be it a grain mill pulp mill, steel mill, furniture factory, or assembly line.

Though time consuming and challenging to make the initial calculations, it will be worth the effort. Raw materials which contain, and manufacturing processes which use large amounts of energy will be pinpointed.

What To Fxpect – Once BTU content is determined, products can be ranked by BTU'S per unit, BTU'S per dollar of sales, and BTU'S per dollar profit. Then, as energy availability becomes more limited, it will be possible to quickly focus on the most profitable products.

Equipment associated with the large energy consuming steps will be identified. Once the energy-hogging equipment is isolated, efforts can be focused on replacing old machinery and equipment, using more energy-conscious designs, and improving maintenance programs.

Less energy-intensive raw materials should escalate less in price as energy costs increase. Having determined the energy content of raw materials, and given a choice, a better raw material selection should be possible.

Stressing the importance of BTU'S per-unit-of-production to plant operating people should provide the incentive for them to chase down where all of the input BTU'S actually end up. Often, the first attempt will account for less than 50% of the input BTU'S. Simply the act of identifying the other 50% will reveal many opportunities for improvement. For example:

1. A reduction in scrap or an improvement in yield will often be the most significant energy reduction that can be accomplished.
2. Leaking water, steam, inert gas or raw material may seem quite small as it escapes into the air, but over time this can represent a sizeable quantity of energy.
3. Heat loss from equipment can sometimes be reduced with more insulation once the losses are identified.
4. Sometimes energy lost to the environment, either through cooling water or through air, can be used advantageously to heat inlet raw materials or process equipment.
5. The energy content of waste may be recovered in part or in total by treating and recycling the waste back through the manufacturing process. In some instances, it may be possible to burn the waste and use the recovered heat in the process.
6. Temperature control equipment may be alternately heating and cooling. This problem is often corrected by a simple adjustment of the controls.
7. Recognizing that it takes 10,000 BTU'S to generate one KWH may suggest using less electricity for heating since this same KWH is capable of producing only 3,413 BTU'S of heat.
8. It may be possible to combine some manufacturing steps so that the product does not cool down between steps and subsequently have to be reheated before it is processed further.

The energy shortage is a national concern. It can also be viewed as an exciting challenge. Those companies that move quickly to meet the challenge will contribute substantially to the solution of a national problem – and make money at it.

The first step is measurement.

DEPARTMENT _____

MONTHLY DEPARTMENT ENERGY USE

1973	ELECTRIC POWER			NATURAL GAS			FUEL OIL			COAL			COMPRESSED AIR		
	kWh	Btu/kWh	Btu	k cu ft	Btu/k cu ft	Btu	gal	Btu/gal	Btu	TONS	Btu/lb	Btu	k cu ft	Btu/k cu ft	Btu
Jan.															
Feb.															
Mar.															
Apr.															
May															
June															
July															
Aug.															
Sep.															
Oct.															
Nov.															
Dec.															
1974															
Jan.															
Feb.															
Mar.															
Apr.															
May															
June															
July															
Aug.															
Sep.															
Oct.															
Nov.															
Dec.															

DEPARTMENT _____

MONTHLY DEPARTMENT ENERGY USE

	psig STEAM			psig STEAM			CONDENSATE USED OR LOST			WATER			TOTAL CONVERSION Btu	NUMBER OF UNITS PRODUCED	CONVERSION Btu PER UNIT OF PRODUCTION
1973	k lb	Btu/k lb	Btu	k lb	Btu/k lb	Btu	k lb	Btu/k lb	Btu	k lb	Btu/k lb	Btu			
Jan.															
Feb.															
Mar.															
Apr.															
May															
June															
July															
Aug.															
Sep.															
Oct.															
Nov.															
Dec.															
1974															
Jan.															
Feb.															
Mar.															
Apr.															
May															
June															
July															
Aug.															
Sep.															
Oct.															
Nov.															
Dec.															

DEPARTMENT _____

MONTHLY DEPARTMENT ENERGY USE

1973	RAW MATERIAL "A"			RAW MATERIAL "B"			RAW MATERIAL "C"			Total Raw Material Btu	Raw Material Btu Per Unit of Production	Total Conversion & Raw Material Btu Per Unit of Production
	k lb	Btu/k lb	Btu	k lb	Btu/k lb	Btu	k lb	Btu/k lb	Btu			
Jan.												
Feb.												
Mar.												
Apr.												
May												
June												
July												
Aug.												
Sep.												
Oct.												
Nov.												
Dec.												
1974												
Jan.												
Feb.												
Mar.												
Apr.												
May												
June												
July												
Aug.												
Sep.												
Oct.												
Nov.												
Dec.												

Tracking Chart

Energy Use Per Unit of Production

Attachment C

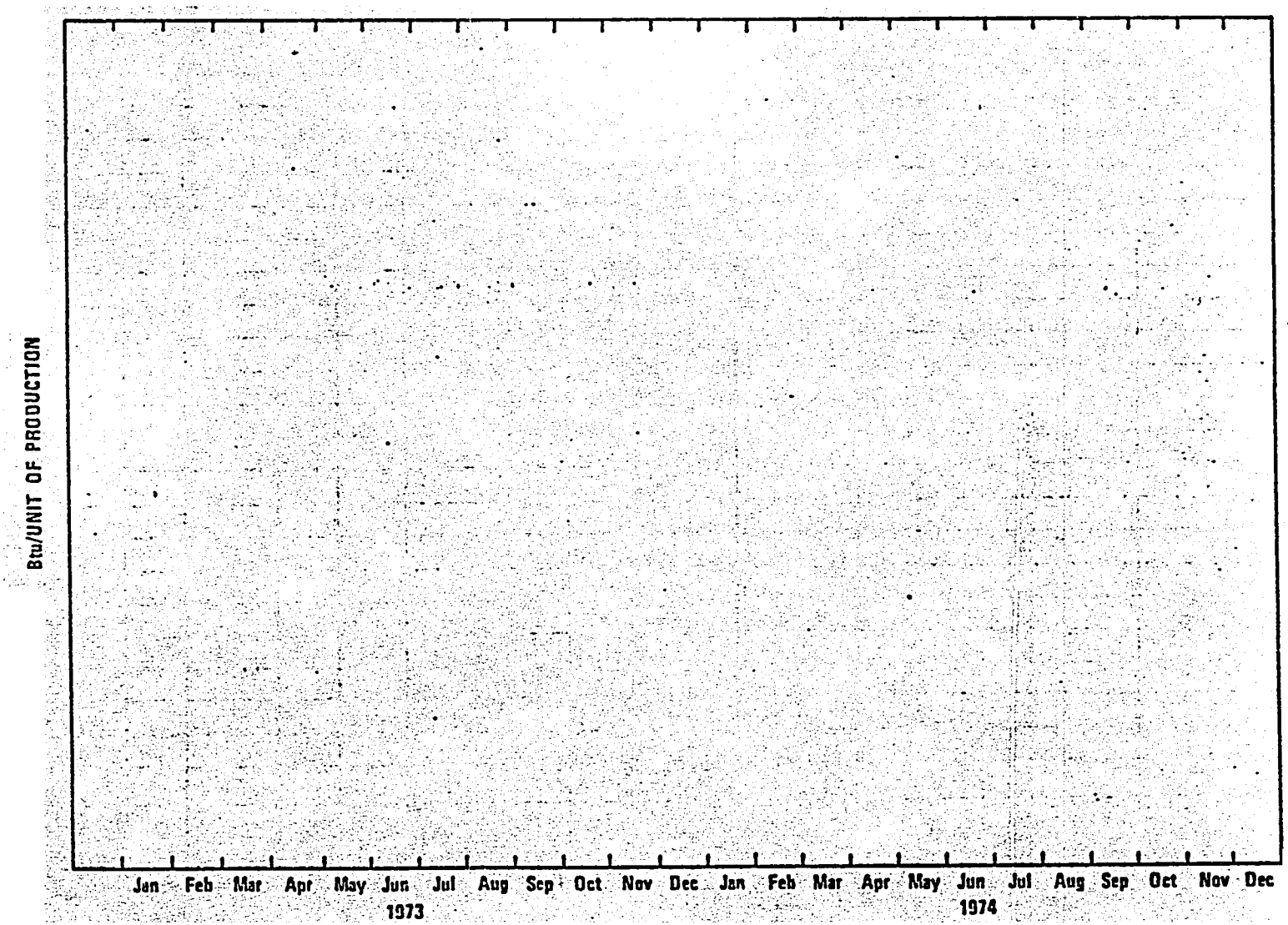

2.6 First Energy Saving Survey

The survey team's plan for the first survey was approved by the Energy Conservation Committee, you recall. Now we have a sequence of four letters regarding the survey. The manager endorses the survey plan. The team submits their timetable to department heads. Findings of the survey are reported. Finally, the team suggests the need for foreman training in energy conservation. Note the application of:

- Survey
- Employee involvement
- Top management commitment

2.6.1

ECONERGY COMPANY

INTER-OFFICE CORRESPONDENCE

Date: January 29, 1974

To: Department Heads

From: D. T. Parker, Plant Manager

Subject: First Energy Saving Survey

You each have a copy of the January 25, 1974, letter from W. D. Smith and A. B. Jones detailing their plans for the survey aimed at energy wastes that can be corrected by maintenance or operations actions. These are the types of energy losses that can be stopped or reduced right away, or fairly soon, and at little or no expense.

Smith and Jones will contact you in the near future regarding a timetable for the survey. Each of you should inform them of the name of the person you designate to accompany them and participate with them in the survey of areas under your responsibility.

Everyone's cooperation in this program is important. I urge that you put some real priority on this survey and on taking corrective actions as soon as practical.

cc: W. D. Smith, Operations "A"
A. B. Jones, Operations "E"

2.6.2

F ONERGY COMPANY

INTER-OFFICE CORRESPONDENCE

Date: February 1, 1974

To: Department Heads

From: W. D. Smith, Operations "A"
A. B. Jones, Operations "B"

Subject: First Energy Saving Survey

The timetable for this survey is given below. If any of these dates are not convenient, please contact us so that other times can be arranged.

Area	Date
Furnaces	February 11
Shop	February 12
Heat Treating	February 13
Shipping	February 14
Receiving	February 15
Laboratory	February 19
Utilities	February 20
Chemicals	February 21
Administrative Building	February 22

cc: D. T. Parker, Plant Manager

2.6.3

ECONERGY COMPANY

INTER-OFFICE CORRESPONDENCE

Date: February 28, 1974

To: Department Heads

From: W. D. Smith, Operations "A"
A. B. Jones, Operations "B"

Subject: Results of First Energy Saving Survey

Attached are the findings of the survey. Some of the operating items have already been corrected by operations personnel. Department supervisors have already written work orders for a number of the maintenance repairs. Those operating or maintenance items that require process shutdown for correction have been added to the lists of jobs to be done at the first shutdown opportunity by department supervisors.

It is important that we monitor the progress of work on correcting these energy wastes by keeping up-to-date records; therefore, it is essential that we are advised when each job is completed.

If there are any questions concerning the survey, please contact us.

As a result of the survey and some energy conservation projects being proposed, we have developed an estimate of potential savings and we suggest that our goal be increased to 12% savings in energy this year.

cc: D. T. Parker, Plant Manager
Energy Conservation Committee

ENERGY SAVING SURVEY

Department: _____

Date: _____

Surveyed by: W.D. SMI[illegible]

A.B. JONES

Fuel Gas or Oil Leaks	Steam Leaks	Compressed Air Leaks	Condensate Leaks	Water Leaks	Damaged or Lacking Insulation	Excess Lighting	Excess Utility Usage	Equipment Running & Not Needed	Burners Out of Adjustment	Leaks of or Excess of HVAC	Location	Date Corrected
		near #1 furnace									Furnaces	
					#2 furnace lining						Furnaces	
						Parts Storage					Shop	
										Broken Window	Shop	
#3 furnace									#1 furnace		Heat Treating	
											Heat Treating	
								#2 furnace			Heat Treating	
	Bldg. Heat-er Trap							#1 conveyor			Assembly	
											Assembly	
						Storage Area					Shipping	
										Doors need weatherstrip	Shipping	
								Man cooler fan			Receiving	
						Above Shelves					Receiving	
								Fume hood fan			Laboratory	
				safety shower							Laboratory	
						Chemical Storage					Laboratory	
	#1 boiler										Utilities	
					#2 steam line						Utilities	
		#2 compressor									Utilities	
	#1 reboiler										Chemicals	
			#2 reboiler								Chemicals	
							steam jets				Chemicals	
						Hallways					Administration Building	
										reheat air condition	Administration Building	
				Men's rm. faucet							Administration Building	

2.7 THIRD MEETING OF THE ENERGY CONSERVATION COMMITTEE

This meeting is the last to be recorded in this section. On the following pages are four memoranda dealing with the topics shown on the agenda. The last memorandum presents plans for special activities each month for the rest of the year. At this point an active, effective program should be well into the process of implementation.

ECONERGY COMPANY

INTER-OFFICE CORRESPONDENCE

Date: March 8, 1974

To: Energy Conservation Committee

From: J. C. Baker, Coordinator

Subject: Agenda for Third Meeting of the Energy Conservation Committee

1. Capital project reviews
2. Energy saving project lists and project evaluation summary
3. Communication of ways to save energy
4. Continuing program

cc: D. T. Parker
Plant Manager

ECONERGY COMPANY

INTER-OFFICE CORRESPONDENCE

Date: March 8, 1974

To: Department Heads

From: D. T. Parker, Plant Manager

Subject: Capital Project Reviews

As you know, in our authorization procedure every capital project must be reviewed and approved with regard to safety, fire protection, pollution abatement, and additional utility requirements. As of this date, we are adding energy conservation to this checklist.

Every capital job will be reviewed by the Coordinator of the Energy Conservation Committee. On large jobs the interested committee member will also participate with the coordinator and project team. The purpose of these reviews is to assure that there is efficient utilization of energy in the design. If the project has to do with production, the design Btu per unit of production will be calculated and compared with the historical Btu unit ratio. More efficient use of energy is expected.

cc: Energy Conservation Committee

2.7.3

ECONERGY COMPANY

INTER-OFFICE CORRESPONDENCE

Date: March 8, 1974

To: W. D. Smith, Operations "A"
A. B. Jones, Operations "B"
T. G. Marshall, Maintenance
R. B. Robinson, Administrative Services

From: J. C. Baker, Energy Conservation Coordinator

Subject: Energy Saving Project Lists and Project Evaluation Summary

Some of our energy conservation projects will require capital; others can be done on expense. Therefore, we should have two separate lists of projects. In order to have the lists in a uniform format, the two attached forms for capital and expense projects are provided for use by all departments.

The ratio of energy savings/year per dollar invested is an indicator of how good a project is, compared to other projects. The higher the number, the better the project. In the forms, a column for percent return on investment is also included as an aid in assigning priorities on projects.

Also attached is an evaluation summary form to be used for each project.

Please submit copies of these forms to the key supervisors in your area and request that they enter their project information and return completed copies (lists and evaluations) before our next meeting one month from today.

Our manager, Mr. Parker, has requested that we continue working on the lists, revising and updating them monthly, adding new projects that evolve and additional maintenance jobs that become necessary.

cc: D. T. Parker, Plant Manager

ENERGY CONSERVATION
CAPITAL PROJECTS

Department: _____

Date: _____

Project Number	Project Description	Energy Savings Btu/Year	Capital Cost $	Ratio Btu/Year Saving / $ Capital	Percent ROI	Priority	Status

ENERGY CONSERVATION
EXPENSE PROJECTS

Department: _____

Date: _____

Project Number	Project Description	Energy Savings Btu/Year	Expense Cost $	Ratio Btu/Year Saving / $ Expense	Percent ROI	Priority	Status

ENERGY CONSERVATION PROJECT
EVALUATION SUMMARY

Capital _____ or Expense _____

Department _____

Date _____

Project No. _____ Person Responsible _____

Project Title: _____

Description of Project: _____

_____

_____

_____

_____

Location: _____

Financial Evaluation

Estimated

Energy saving (electric power kWh/yr steam lb/yr etc.)

Utility or Raw Material	Saving
_____	_____ /yr
_____	_____ /yr
_____	_____ /yr
Total energy saving	_____ MBtu/yr
Total energy cost saving	_____ $/yr
Other cost saving due to:	
_____	_____ $/yr
Additional cost due to:	
_____	_____ $/yr
Net cost saving	_____ $/yr
Cost of project	_____ $

ENERGY CONSERVATION PROJECT
EVALUATION SUMMARY

Calculated

Return on investment _____ %

Pay back period _____ months

Other _____ _____

Btu/unit of production: Now _____ After project implemented _____

Benefits/Problems

Product quality _____

Product yield _____

Production rate _____

Safety _____

Pollution _____

Maintenance-manpower/materials _____

Utilities _____

Working conditions _____

Employee attitude _____

Community _____

Other benefits/problems connected with implementation:

_____

_____

_____

Comments: _____

_____

Project rating: _____

_____

_____

Planned authorization request date: _____

2.7.4

ECONERGY COMPANY

INTER-OFFICE CORRESPONDENCE

Date: March 8, 1974

To: Energy Conservation Committee

From: T. G. Marshall, Maintenance

Subject: Communication of Ways to Save Energy

I have assembled a group of ECO's from EPIC, which are particularly applicable in our operation, along with a few good articles from the literature. I propose that we publish this as a booklet for plant wide use by supervisors. A copy of the list of ECO's chosen is attached hereto. After each of you has looked over the copy and indicated your approval, I will proceed with publication and distribution.

May I suggest that this booklet could be a useful tool in a training course as suggested in the recent letter from W. D. Smith and A. B. Jones.

cc: D. T. Parker
Plant Manager

LIST OF SUGGESTED ENERGY CONSERVING OPPORTUNITIES

	ECO
Building and Grounds	
Reduce Warehouse Ventilation Air	3.2.1
Reduce Outside Lighting	3.13.1
Reduce Air Conditioning During Non-Working Hours	3.2.5
Electric Power	
Schedule to Minimize Electrical Demand Charge	3.3.1
Steam	
Insulate Bare Steam Lines	3.4.1
Return Steam Condensate to Boiler Plant	3.4.3
Stop Steam Leaks	3.4.5
Inspect and Repair Steam Traps	3.4.6
Other Utilities	
Eliminate Leaks in Combustible Gas Lines	3.5.1
Lower Pressure of Compressed Air to Minimum Necessary Level	3.5.2
Eliminate Leaks in Compressed Air Lines	3.5.3
Use Fan for Personnel Cooling – Not Compressed Air	3.5.5
Combustion	
Replace Worn and Obsolete Controls	3.8.2
Daily Monitoring of Boiler Efficiency	3.8.4
Flue Gas Analysis as a Maintenance Tool	3.8.5
Scheduling	
Standby at Reduced Temperature	3.9.1
Shut Down Idle Heating Equipment	3.9.2
Process Specifications as a Source of Energy Savings	3.9.3
Schedule Equipment for Maximum Utilization	3.9.4

2.7.5

ECONERGY COMPANY

INTER-OFFICE CORRESPONDENCE

Date: March 8, 1974

To: Energy Conservation Committee

From: J. C. Baker, Energy Committee Coordinator

Subject: Continuing Program

At this point we have our program well underway, but I believe you will agree that we need a continuing program to maintain our momentum. Periodic energy saving surveys are one important activity. Communication and education also need emphasis to develop awareness. I thought it would be well to list the elements in this area, some of which we already have in the mill and others we may wish to include in plans for the future.

1. Monthly meetings of Energy Conservation Committee.
2. Monthly meetings of each committee member with key supervisors in the area he represents.
3. Booklet on ways to save energy.
4. Energy conservation course to be included in Supervisor Training program.
5. Periodic bulletins or features in the Plant News publicizing energy saving achievements and recognizing individuals responsible.
6. Posters on energy saving to be used in much the same way as safety posters.
7. "savEnergy" decals for placing at light switches, typewriters, and on hard hats.
8. Technical talks on energy saving aspects of steam traps, lighting, insulation, etc.
9. Letters to employees and their families giving energy saving tips for the home.
10. In public relations, company ads stressing energy conservation on radio and in newspaper, talks on energy saving before civic groups.

Attached to this letter is the outline of a proposed program of activities for each month for the rest of the year.

cc: D. T. Parker, Plant Manager

savEnergy

Planned Activities in Energy Conservation for
Remainder of 1974

The following activities will take place each month and will not be repeated in the plans for individual months:

1. Meeting of Energy Conservation Committee
2. Meeting of each Committee Member with the key supervisors in his area
3. Updating of energy saving project lists
4. Communicate progress with updated plot of Btu/unit of production
5. Department supervision will conduct weekend audit

Month	
April	1. Distribute booklet of selected ECO's 2. Review status of corrective actions regarding first energy saving survey 3. Publish bulletin on energy saving tips for driving 4. Technical talk on steam traps
May	1. Energy conservation course in Supervisor Training 2. Departments develop energy balances 3. Distribute "savEnergy" decals 4. Technical talk on economics of insulation 5. Letter to employees at home with energy saving tips for the home
June	1. Trained foremen start holding monthly meetings with their people on energy conservation 2. Publish bulletin on air conditioning tune-up 3. As a result of energy balances, committee will conduct energy surplus survey 4. Coordinator gives talk at high school
July	1. Poster contest 2. Bulletin on energy saving during vacations 3. Survey of steam pressure reducing stations 4. Technical talk on lighting
August	1. Publicize poster contest winner in plant and community newspaper 2. Distribute posters 3. Survey compressed air requirements 4. Bulletin - "Don't use compressed air for cooling"
Sept.	1. Bulletin - "Tune up space heating systems" 2. Survey steam condensate system 3. Coordinator prepares talk with slides for local technical society meeting 4. Committee rides through plant at night and suggests corrective action on lighting
October	1. Demonstration of infrared survey to detect excessive heat losses 2. Steam trap survey 3. Bulletin on steam tracing systems 4. Technical talk on combustion

November 1. Survey oversized electric motors and equipment
2. Bulletin - Recognize someone's energy saving achievement
3. Second course in Supervisor Training
4. Technical talk on electric motors and power factor

December 1. Bulletin - "Use reflectors and reduce Christmas lighting"
2. Report achievements in reductions of energy use and announce goal for next year
3. Survey use of low pressure steam
4. Plan program activities for next year

2.8 CONCLUSION

This section on program implementation began with a discussion of the importance of management interest and support. It seems appropriate to include in the conclusion a letter from the manager to his staff demonstrating his *continuing concern* about energy conservation. His request for a contingency plan is then answered by his department heads with a report on the status of the contingency planning in each deparment.

2.8.1

ECONERGY COMPANY

INTER-OFFICE CORRESPONDENCE

Date: March 20, 1974

To: Department Heads

From: D. T. Parker, Plant Manager

Subject: Request for Energy Curtailment Contingency Plan

You should all be aware that energy supply is a very real and serious problem to our operations. Briefly, our anticipated allocations of fuel oil, natural gas, electric power, and gasoline are insufficient to support our operation as they have in the past. Our ability to eliminate unnecessary use of these commodities and to allocate fuel to vital functions will ultimately determine how severely our operations are curtailed.

Even more serious is our inability to secure adequate quantities of coal to meet anticipated needs. Efforts during the past two months have failed to increase deliveries, and inventories are currently at a low level. Current fuel suppliers are operating at their ultimate capacity and they face problems associated with weather, fuel shortages for their mining equipment and ever increasing strip mine regulations. To date, we have been unable to secure additional suppliers as those who are mining coal are sold out beyond their production capabilities.

At this time it appears that some production curtailments may be necessary. Each supervisor should review his operations: those pieces of equipment which are operating at less than desired efficiency with respect to energy consumption should be identified and plans made to restrict or curtail their operation. The basic factors which influence fuel efficiency and/or energy utilization in all processes should be identified and immediate steps taken to minimize our energy requirements.

In anticipation of possible short term reductions in energy supply, for instance electric power, we need a contingency plan. This should include a list of the equipment that would be shut down and the sequence of shut down in your department in case of 25%, 50%, 75% and 100% energy curtailments.

Your plan for reducing energy requirements in your area should be formalized and available for review by me one week from today
Remember - NO SAVING IS TOO SMALL TO BE CONSIDERED.

cc: Energy Conservation Committee

savEnergy

2.8.2

ECONERGY COMPANY

INTER-OFFICE CORRESPONDENCE

Date: March 27, 1974

To: D. T. Parker, Plant Manager

From: Department Heads

Subject: Reduction of Energy Requirements and Contingency Plan Status

Significant reductions in energy use have been achieved in our operating units as follows:

Utilities

It has been our operating practice to fire all three boilers even though steam requirements could be provided by two boilers fully loaded. In this way, a forced outage of one boiler could be handled without decreasing steam output and causing interruption of operations of steam users.

We have shut down #1 boiler, the oldest and least efficient boiler, and the result is a fuel saving of ____M Btu/hr. In case of a forced outage of one of the two operating boilers, we have set up a communications procedure to curtail steam to certain units that can be shut down safely and quickly with the least impact on other operations in the plant and re-started with a minimum loss of productivity.

Operations "A" and "B"

Similarly, in both departments, we have been able to shut down one of three furnaces by rescheduling throughput. The schedule is extremely tight at our present production rate, and on occasion we may need to fire up the third furnace in order to meet commitments. Fuel saving at present is ____M Btu/hr.

savEnergy

Contingency Plan Status

1. Electric Power

In general, during any curtailment of power, air conditioning thermostats in all buildings will be reset to ____F. System interlocks have been provided to avoid inadvertant operation of the heating system, except in those situations where the controlled lower humidity is required.

If a "brown out" occurs (voltage reduction in excess of 10%), certain motors trip off automatically and others must be tripped manually to avoid damage. We are surveying all motors to identify the ones that require manual tripping. Utilities will set up a communication procedure to inform the appropriate people when a "brown out" occurs.

Following is a tabulation of shutdowns sequence for curtailments of electric power:

Curtailment	Shutdown Section
25%	1
50%	1,2
75%	1,2,3
100%	1,2,3,4

We have designated a number of units that will be included in each of the four sections but the plan is not complete yet.

2. Fuels

For each fuel, we will have a tabulation like the one for electric power. We are holding meetings this week to complete the designation of units in each section for each tabulation. We hope to submit the detailed plan to you next week.

In general, when fuel curtailment causes a cut-back in steam generation, all steam heated buildings will have thermostats reset to ____F. Again, system interlocks will prevent inadvertant operation of the cooling system, except where the controlled lower humidity is required.

savEnergy

EMPLOYEE MOTIVATION AND COMMUNICATION METHODS

David M. Heller
Air Products and Chemicals, Inc.
Paulsboro, New Jersey

ABSTRACT

This paper discusses the compelling reasons for involving all employees in the plant energy conservation effort, offers suggestions on how to implement and maintain a plant-wide, people oriented conservation program and provides examples to illustrate the methods involved and benefits possible. Three areas will be stressed: publicity, or communicating down the ladder, through newsletters and the use of distinctive logos; communicating up the ladder, by means of employee suggestion programs and discussion forums; and training, necessary to free employees from a pre-Embargo approach to manufacturing.

Current technical literature is full of information on how to reduce energy use. Consider energy management systems, waste heat recovery or heat pumps - all the facets of the design, construction, and operation of such equipment and many other new devices takes up an ever-increasing amount of our time. No one can deny the benefits achievable through capital investment and new technologies, but there are other, oft-neglected aspects of energy conservation to be considered. The development and use of an effective energy management organization and the involvement of the entire plant in the conservation effort can and should go hand-in-hand with the physical improvement of the operation.

I'd like to share with you my experiences as a member of one very successful energy management organization - explaining how we are set up to implement energy conservation and detailing a number of programs we have found effective.

ORGANIZATION FOR ENERGY CONSERVATION

I am employed as Technical Supervisor at Air Products and Chemicals' Paulsboro, New Jersey plant. The Paulsboro Plant is part of the Chemicals Group of Air Products. We are located in Southern New Jersey, in the Greater Philadelphia area. Of our 100 employees, 25 are exempt and the balance hourly or non-exempt. We produce various types of industrial catalysts, with our major product being DABCO, a urethane foam catalyst.

The Paulsboro Plant has seen sharply spiraling energy costs over the last few years, as we all have. From 1978 to 1981, our average cost for energy rose by more than 90 percent. The impact of these costs

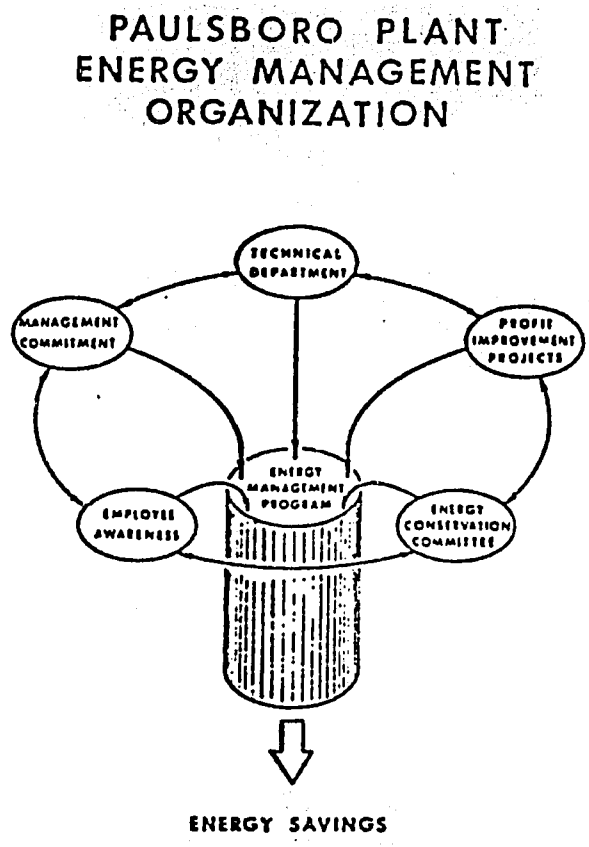

FIGURE 1

forced us to re-evaluate our conservation efforts and two conclusions came to light. First, conservation projects once glossed over because of a low rate of return now looked more attractive. It became necessary to refocus our technical efforts towards auditing our process flows and examing heat and material balances with the proverbial 'fine tooth comb.' Secondly, we came to realize that in order to be successful in reducing energy costs it made sense to involve the entire plant in the effort, not just a handful of engineers and technicians. The Paulsboro Plant conservation effort was thus or-

USE ENERGY WISELY

PAULSBORO ENERGY REPORT

NUMBER 10
20 JULY 1981

ENERGY USAGE REMAINS DOWN

Through June, plant energy usage was 4.0% less than the same period last year. Remember to keep your eyes open for energy waste.

THIRD QUARTER SUGGESTION DRAWING

Bud Johnson was picked as this quarter's winner of a $25 gift certificate for energy suggestions. Thanks to everyone who submitted suggestions over the last three months.

STEAM TRAP CAPS

During the next round of steam trap inspections, Dave DiPietro will be adding caps to all steam traps. The caps insulate the traps by providing a layer of dead air around the trap and protecting it from rain. We'll save about $4,500 a year on our steam bill. Plant steam traps are inspected every three months.

OXIDIZER SAVINGS

The oxygen controls on the Thermal Oxidizer saved $20,000 in natural gas last quarter, or $80,000 over the entire year. A few bugs cropped up or savings would have been even greater.

SEE THE LIGHT

Flourescent lamps produce up to five times as much light for the same energy as incandescent lamps and last 10 to 15 times longer.

Wattage does not measure the amount of light - it measures the energy needed to light the bulb. The amount of light is measured in Lumens. Example - you need six 25-watt bulbs to equal the light from one 100-watt bulb.

It's an old wive's tale that there is a surge of power when you turn on a light. If you leave a room, even for a minute, turn off the light.

* *

IF YOU HAVE ANY SUGGESTIONS FOR IMPROVING THIS NEWSLETTER, DROP THEM IN THE SUGGESTION BOX. I'D APPRECIATE YOUR IDEAS. THANKS.

FIGURE 2

ganized along the lines shown in Figure 1.

The Technical Department and Technical Supervisor have major responsibility for the program. The Technical Supervisor serves as Plant Energy Conservation Coordinator; a part-time function at Paulsboro, but a position that requires full-time attention at larger facilities. The Conservation Coordinator's responsibilities include: developing and communicating conservation techniques and ideas to the employees, monitoring and reporting plant energy consumption, developing plant programs, goals and budgets and maintaining a plant environment conducive to energy conservation.

The Profit Improvement Program is a suggestion program for our technical people. This program encourages new ideas and recognizes the contributors.

The Energy Conservation Committee is composed of representatives from Production, Maintenance, Technical and Project Groups. The Committee meets monthly to discuss and evaluate the status of the plant conservation program. The Committee feeds information to the employees and communicates employee's concerns to management. The most important function of the Committee is to serve as a place where inter-departmental problems involving conservation projects or programs can be resolved.

Management commitment is a major component of our overall effort. Management communicates standards and goals and measures performance. Group and Corporate management provide support through people and capital, and acts as a clearing house for ideas. On the plant level, management communicates directly with the employees through our newsletter and letters sent to the homes.

The position of Energy Coordinator, the PIP program, and the Conservation Committee have all been active for a number of years. I believe the fact that we have organized specifically for the conservation of energy has helped us keep the effort alive and has resulted in a number of outstanding innovations. Now, I'd like to focus on the last box in our organization diagram - employee awareness.

INVOLVE THE ENTIRE PLANT

Proper motivation of operating, maintenance, laboratory and clerical personnel can be one of the most cost-effective energy conservation techniques. Hourly employees have the closest contact with the operating equipment and are often the most knowledgeable about production problems and unit idiosyncracies. They will see things that you as an engineer or manager might overlook and they will extend your eyes and ears to round-the-clock coverage.

These people are just as concerned as you are about the continued escalation of energy costs and the implications of dependence on foreign oil. Our responsibility is to direct them to utilize on the job the same resourcefulness they demonstrate in dealing with home energy problems.

What kind of results can be expected? The effects of improved operations and maintenance are often difficult to quantify - a steam leak reported a few days before a supervisor notices it, a spare pump turned off, a steam tracing line insulated rather than ignored. Then again, an operator might suggest a process modification that could yield large savings. There are also a number of intangibles - an improved morale, an esprit de corps, a spirit of cooperation. The point is that the benefits will far outweigh the costs of organizing the program and maintaining the effort.

There are many methods that can be used to motivate and communicate with your employees. The approach should be one of common-sense, stressing facts, with just enough pizzazz so they are noticed, without being laughed at. I'd like to stress three areas - publicity, or communicating down the ladder, communicating up the ladder, and training.

PUBLICITY

The "Paulsboro Energy Newsletter, (Figure 2) was developed to publicize the plant program. The Newsletter has been published monthly since October, 1980 and is posted on plant bulletin boards. A variety of items are presented - updates on plant conservation projects, recognition of outstanding contributions, progress toward conservation goals, and home energy tips.

The Newsletter has been very well received by our employees. One comment I often hear is that they feel better about their jobs and relations with the plant when they're told what's going on. Now that we've established an energy conservation presence at the plant, I find employees asking me if I have any information on air conditioner sizing, solar heating, and other items discussed in Newsletters.

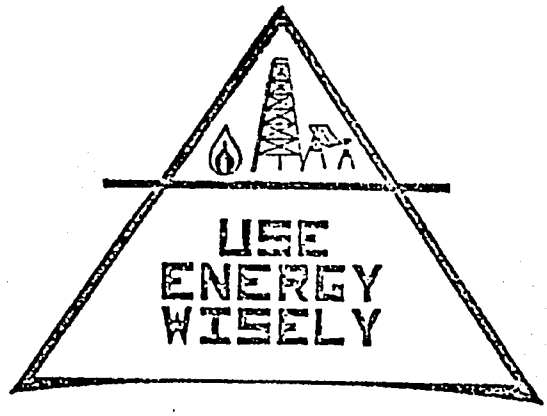

FIGURE 3

Please notice the emblem in the top left corner of the Newsletter (Figure 3). One of the first steps in publicizing Paulsboro's program was the development of an energy logo. This is a recognition tool used on all our conservation literature. We based ours on our corporate logo, adding the simple phrase "USE ENERGY WISELY" and adding a gas flame, an oil derrick, and electrical transmission

lines to illustrate our plant energy sources. One excellent way to kick off a conservation program is to hold a logo design contest among employees, or their children.

The types of publicity vehicles you employ will depend on your imagination, and your ability to judge what will be effective at your location. Handouts and pay envelope stuffers can present useful news, especially home conservation tips. These items can be obtained at a nominal price from public and private energy conservation organizations. Your local utility companies should also be a good source of information. This material is usually presented on a seasonal basis - heating tips in January, air conditioning ideas in July.

LISTENING TO EMPLOYEES

While communication down the ladder has been stressed to this point, input from the hourly employees should not be ignored. The programs already mentioned will help promote a spirit of cooperation at your location and employees will feel better about approaching their supervisors with their thoughts and ideas. And the number and quality of those ideas would probably surprise many of you.

To help tap this source of information, an Energy Conservation Suggestion Program was begun at Paulsboro. Our capital expenditure consisted of a short form and a suggestion box. Each suggestor receives a personal reply thanking him and explaining what the follow-up action will involve. The reply is most important, unfeasible and even absurd suggestions are acknowledged in order to show we appreciate the interest and respect the input. Responsibility for acting on worthy suggestions is assigned at Conservation Committee meetings. (Figure 4).

During the first full year of operation twenty-five percent of our hourly personnel submitted suggestions and total suggestions numbered sixty. Quarterly a randomly drawn suggestion wins a $25 gift certificate at a local department store and a $50 certificate is given each year for the best suggestion. After completion of all projects and work orders resulting from last year's suggestions total savings are expected to be $25,000. The suggestions have included items such as: installation of light switches in under-utilized rooms, installation of skylights to reduce the need for light fixtures during the day, and lists of areas requiring insulation that were overlooked during energy audits. We have received only a few worthy process improvement suggestions to date. Process improvements could of course save many times over the $25,000 figure.

There are pros and cons on the question of prizes. One of the most-voiced complaints - when prizes are discontinued the signal is given that the program is ended. This is a valid point, and the answer must be decided at each location, based on

81-31

ENERGY CONSERVATION SUGGESTION

TO SAVE ENERGY IN THE PLANT, I SUGGEST:

SHUT OFF GLYCOL CIRCULATING PUMP FOR DABCO II STILL WHEN NOT IN USE.

PUMP RAN 22 DAYS DURING JANUARY WHILE STILL WAS DOWN.

SUGGESTOR T. MAGAZU DEPT. OPERATIONS DATE 2/4/81

SEND SUGGESTION TO: DAVE HELLER

(Figure 4

past experiences. Any publicity or motivational program is going to slack off after the first flush of enthusiasm. This can be discouraging and help put a damper on everyone's conservation spirit. Let me suggest that this slackening off is a signal to transfuse some new ideas into your program.

I have always had an aversion to the use of competition between shifts as a means of promoting energy conservation. The key point in any awareness program should be cooperation, and competition, as friendly as you might try to make it, will often ruin any cooperative spirit. As an example, at a plant where I was formerly employed, we were interested in seeing which shift could produce the highest percentage of on-spec product. It was discovered that the operators on one shift would come in and rearrange the settings on a number of critical instruments to settings they knew worked well. Just before the shift ended, they would return the settings to those in use before they came on. Of course, after running lined-out for seven and one-half hours at one set of conditions the unit would go to pieces and the next shift would require several hours to get lined-out again. We decided after that to stick to softball for inter-shift competition.

ENERGY CONSERVATION TRAINING

Back in the good old, pre-Embargo days, it was not uncommon for operators in the chemical industry to use a little extra energy to maintain a safety margin on product quality. Increasing the reflux rate on a distillation column is one example. More often than not, supervisors shared the blame for wasting energy since they took the lumps if the product was off-spec. Unfortunately, old habits die hard. Employees must be re-trained to respect energy costs.

As I mentioned earlier, an "energy-awareness" is a necessary first step. But specific training will also be required.

One of the first things our supervisors did at Paulsboro was to re-read and where necessary, revise operating procedures to focus on conservation. There is no point in purifying a product way beyond its specification. We also expanded our preventive maintenance program in the hopes that it would help us eliminate energy-intensive startups and shutdowns.

This year, we plan to introduce energy training sessions for all employees, similar to a program we now use for safety training. A typical session could include an explanation of the operation of a new piece of equipment, information on how much a steam leak can cost and how to report one, and a question-and answer period on energy issues.

Currently, we are developing an energy conservation slide show for presentation to all employees at upcoming training sessions. The program will use photographs shot at our plant to explain our energy usage, showing plant utility tie-ins, the operation of energy users, examples of energy wasters - such as steam leaks, and uninsulated lines, methods for reducing energy use and a review of plant utility costs. The slides will be accompanied by a tape recorded narration. Employees relate well to this type of program since it is specific to their activities. At a cost of twenty to thirty dollars per show,"homemade" training aids are less expensive and more effective than commercially available programs.

A number of equipment vendors present short training seminars for operating personnel. Recently, we had a steam trap manufacturer present information on trap inspection and repair techniques to our maintenance men.

Instruction in conservation techniques should be included in the training of new employees, but if experienced men are used to train the newcomers, as is often the case, be sure the experienced ones are not going to hand down a pre-Embargo approach to manufacturing.

In summary, I've tried to present a "punch-list" of techniques and tools to increase the effectiveness of your energy conservation programs. Consider organizing for energy conservation. And try to find one person in your organization who shows an interest in conservation and formalize that interest into the position of conservation coordinator. Many methods are evailable that will pull your entire organization into the effort - newsletters, handouts, posters. Remember to listen to your employees too, through suggestion programs and forums. And retrain your people to appreciate the impact that energy is having on the cost of doing business.

The mix of methods you use will of course, vary with the type and size of the audience and the resources available, but I hope you have discovered one or two techniques that might be worth a try.

Direct dyebath reuse: The future is now!

First mill report: Results from two firms on savings from analysis and direct recycle of dyebath ingredients

Between 1978 and 1980, a team from Ga. Tech's School of Textile Engineering conducted three full plant demonstrations of dyebath reuse technology. It documented that the concept could save about 2¢/lb of dyed goods in energy, water/sewer and chemical savings.

Multiple batches were dyed from the same bath, and shades could be easily switched, as long as they were composed of the same dyes.

Plants participating in the demonstrations have continued to expand and refine the technology. Two firms, Adams-Millis Corp. and E&B Carpets, are realizing substantial savings from vigorously embracing dyebath reuse.

Adams-Millis converts to dyebath reuse

The first demonstration was conducted at Adams-Millis Corp.'s High Point (N.C.) dye plant. One rotary-drum machine was outfitted with a holding tank, and reuse trials on disperse dyeing of nylon got under way.

After reviewing results and benefits, company officials planned expansion of the technology to its Franklinton, N.C., plant.

Wade Johnson, superintendent of seaming and dyeing at Franklinton, says that 95% of the plant's rotary-drum machines are now operating routinely on dyebath reuse. Production is disperse dyeing of nylon pantyhose, with 160-180 lb of goods dyed per batch in 200-gal baths. Problems have been minimal.

"We use the final softener bath from the preceding batch to prerinse incoming goods," explains Johnson. "The practice removes most of the spin finish and knitting oils, while partially replenishing water lost to the dyed goods."

The plant calculates that a dyebath is totally replenished in volume after about seven cycles, based on 15% loss of dyebath to each batch.

"We follow the light-medium-dark, then reverse shade sequence rule," notes Johnson. This minimizes machine cleanup.

The analysis system installed five years ago is still operating smoothly. But Johnson says it needs "better automation." An ideal system would automatically sample a spent dyebath and carry the sample through any required manipulations, such as solvent extraction. The system would then analyze the pertinent dye-containing layer automatically, and print the add-back formula for the subsequent shade. This would eliminate human intervention from the analysis process.

Johnson is reluctant to give exact plant savings, but he confirms that 2¢/lb is a "valid ballpark figure," varying with shade sequencing.

Johnson is emphatic about the value of dyebath reuse: "It was an excellent move by Adams-Millis. Dyebath reuse is the wave of the future, and I believe those who do not incorporate the technology may not have a bright future."

Savings from reuse also entered into capital decisions. "We evaluated replacing our rotary-drum

—By Dr. Fred L. Cook, Associate professor, Textile Engineering, Ga. Tech

Table 1. Batch dyeing systems that are adaptable to dyebath reuse

Product	Fiber	Dye class(es)	Machine	Known plant installations
Knit fabric	Polyester	Disperse	Jet	
	Cotton	Reactive	Beck	
	Poly/cotton	Disperse/reactive	Beck	
Yarn package	Polyester	Disperse	Package	
	Poly/cotton	Disperse/reactive	Package	
Socks	Nylon/spandex	Acid	Paddle	
Pantyhose	Nylon/spandex	Disperse/acid	Rotary drum	X*
Carpet	Nylon	Disperse/acid	Beck	X*
	Polyester	Disperse	Beck	X
Woven fabric	Aramid	Basic	Jet	X*
Skein	Acrylic	Basic	Skein	X

*In-plant demonstrations conducted by Ga. Tech.

Table 2. E & B Carpets' annual savings on five becks

	Volume savings	Cost savings
Dyes, chemicals	—	$43,400
Water/sewer (gal)	6.75-million	3,700
Energy (Btu, millions)	4,231	17,135
Total savings		$64,235

machines with newer, more efficient, low-liquor-ratio machines," notes Johnson. "Considering dyebath on the rotary-drum machines, payout for the new machines became excessively long."

E & B: reuse on a grand scale

Evans & Black (E & B) Carpets, a subsidiary of Armstrong World Industries, incorporated dyebath reuse in its Dalton, Ga., plant with minimal assistance. Inspired by a seminar on the subject, E & B's plant dyer, chemist and engineering team at E & B began a campaign in 1979 to adapt the concept to disperse dyeing of polyester carpets in jumbo becks (1,800-2,000 lb/batch).

Rejecting holding tanks, E & B connected five becks with a pump manifold system. A small microprocessor unit sequences valves and pumps between any two becks. The dyer controls shade/beck sequencing from panels in the lab.

When the first dyeing is completed and the second beck is empty, the microprocessor activates the proper valves and pumps to transfer the bath.

If scheduling permits, the same shade is dyed each time a dyebath is reused (about 90% of the time). If not, the dyer chooses a light-medium-dark sequence. Each dyebath is used three or four times, depending on shade. Reuse is limited, as dye exhaustion decreases slightly with each use, due to a surfactant used to scour the goods.

A color computer system (IBM) conducts dyebath analysis. In early trials, dyeings consistently showed 90% dye exhaustion, 50% carrier loss and 25-50% loss of leveling agent, depending on shade. Since only six dyes were used for all the polyester shades, experience eventually led to successful add-back.

An evaluation of E & B's five-beck system after a year of reuse operation is detailed in *Table 2* (above). Based on actual savings, a 2-yr simple payback on capital investment was the result. Savings were realized with about 25% of the plant's polyester production being dyed via reuse.

Problems with reuse at E & B have been minimal. Scheduling production so that several loads are dyed the same shade in a sequence is more difficult when business is slow. Minor crocking on dark shades has been linked to reuse.

But savings have more than offset minor problems. The plant has subsequently interconnected six more becks of smaller size in a reuse system. About 45% of the plant's current polyester production goes through the reuse concept, with projected annual savings of almost $115,000. #

Ga. Tech spawned dyebath reuse during the oil embargo

In 1974, the picture for batch dyeing had turned pessimistically bleak, for several reasons:

- Effluent guidelines were becoming increasingly stringent;
- The oil embargo of the previous year had caused concerns about energy supplies and rapidly escalating prices;
- Water supplies had become a variable in some areas, as expanding municipalities and industries placed heavier burdens on delivery systems.

Surveying the situation, Dr. Wayne Tincher and graduate student Gary Mauldin of Ga. Tech's School of Textile Engineering realized that "business as usual" would not suffice, given the realities of the 70s and beyond.

Batch dyeing's most obvious drawback was the "one bath, one batch" practice. After dyeing a single lot of fabric, the bath was routinely dropped to the sewer. In the process, valuable energy, unaffected auxiliary chemicals/dyes and water were lost, while effluent treatment problems were magnified.

Logically, if single dyebaths could be directly reused to dye multiple batches, savings in all aspects of batch dyeing would be substantial.

The key problem was to develop an analytical system that could accurately define the dye concentration left in the bath, and yet be simple enough for plant personnel to operate. Development was aided by early recognition that most auxiliary chemicals are usually present in excess and are not exhausted into the fiber.

Auxiliaries are colorless and thus require sophisticated techniques for accurate analysis. In practice, however, add-back of the auxiliaries proved sufficient, at a level commensurate with the fresh water necessary to return the exhausted bath to original volume.

Tincher and Mauldin demonstrated that simple visible spectrophotometry, using the Lambert-Beer Law as a basis, was adequate to accurately analyze residual dye concentrations in exhausted baths.

Since absorbances at any wavelength of visible light are additive, even mixtures of colorants could be analyzed for their separate components. Differential exhaustion between dyes therefore presented no problem.

For plant application, Dr. Howard Olson interfaced a visible spectrophotometer (Bausch & Lomb) with a desktop computer (Hewlett-Packard 9815A). A custom interface device provided logic-level conversion to provide standard BCD encoding.

After receiving proper input data from the spectrophotometer, the computer printed out reuse formulation for the next shade, including weights of dyes and chemicals to restore the bath to original strength, and the volume of water to be replaced.

Textile Chemist and Colorist
January 1978 / Vol. 10, No. 1

Dyebath Reuse in Batch Dyeing

By F. L. COOK and W. C. TINCHER, School of Textile Engineering, Georgia Institute of Technology, Atlanta Ga.

ABSTRACT

Dyebath reuse has been systematically investigated as a viable low capital modification of batch dyeing processes to reduce the volume of water required, the quantities of chemicals discharged and the energy consumed in the coloration of textile products.

Instead of discharging the bath at the end of the dye cycle, the dyebath is analyzed spectrophotometrically and reconstituted to the concentration required for a subsequent dyeing. Laboratory dyeing of 5 pound nylon carpet samples to a single shade with acid dyes and to 10 different shades in a color line with disperse dyes from reused dyebaths indicated that the procedure had commercial potential. Color reproducibility and levelness of dyeings were within industrial standards.

Dyebath reuse has been expanded in our laboratories to include pilot scale dyeing of nylon carpet, nylon pantyhose and pressure package dyeing of polyester yarn. Initial experiments have also been conducted on batch dyeing cotton knit fabric with reactive dyes, polyester carpet with disperse dyes, men's nylon and acrylic socks and nylon upholstery fabric.

Combination of dyebath reuse technology with other recent developments in treatment of dyehouse wastewater to permit closed cycle operation are also discussed.

KEY TERMS

Batch Dyeing
Disperse Dyes
Dyebath Reuse
Dyeing
Nylon
Pollution
Polyester
Wastewater Treatment

THE textile industry uses over a trillion gallons of water annually, much of which is discharged along with appreciable quantities of organic and inorganic chemicals. The establishment by EPA of strict pretreatment and discharge standards by 1983 requires that an in-depth examination be made of all the available options for pollution reduction.

Dyebath reuse has been systematically investigated as a viable, low capital modification of batch dyeing processes to reduce the volume of water required, the quantities of chemicals discharged and the energy consumed in the coloration of textile products. The reported research deals with pilot scale demonstrations of dyebath reuse adaptation to atmospheric disperse dyeing of nylon carpet and nylon pantyhose and pressure disperse dyeing of polyester yarn packages. These materials and processes accounted for approximately 930 million pounds of dyed textile production in 1973 (*1*).

Materials

The carpet, hosiery and yarn were supplied by leading manufacturers in the Southeast. The nylon carpet was composed of nylon 6 face yarn and polypropylene primary backing, and contained both regular and cationic-dyeable ends. The construction was short shag. The ladies' pantyhose was constructed from nylon 66. The polyester was of the polyethylene terephthalate variety, and both staple spun and continuous filament textured yarns were utilized. The dyeing procedure for the carpet was patterned after procedures common to the industry. The procedures for the pantyhose and package yarns were supplied by the participating companies. The carpet was dyed on a 4-ft atmospheric beck. The hosiery was dyed on a 2-ft Smith rotating drum machine. A 1-package Morton pressure machine (1- and 2-lb packages) was used to dye the polyester yarn.

The initial dyeings in each series were conducted as standard dyeings by the chosen procedures. At the completion of the dyeing cycle, a sample from the hot bath was analyzed spectrophotometrically to determine the quantity of dyes necessary to reconstitute the bath to the original concentrations. After replenishing the bath with the necessary dyes, a predetermined amount of auxiliaries (always reduced from the original procedure) and water were added to compensate for evaporation and fiber retention losses, a second batch of material was entered into the hot bath, and a second dyeing cycle was conducted. The reuse sequence was repeated a number of times until the designated series was completed.

Carpet Procedure

Approximately 32 lb of the nylon carpet was mounted in the 4-ft beck, cold water was added to reach a liquor ratio of 25:1 (96 gal), and the auxiliary chemicals added: Tanapal NC, 1% owf; Plexene D (Tanatex Chemical Co.), 0.5% owf; trisodium phosphate, 1% owf. The carpet was circulated for 5 min and the dyes necessary to obtain a light green shade were added over a 15-min period: a disperse blue (0.03%); a disperse yellow (0.35% owf); a disperse red (0.04% owf). The bath was brought to the boil at 3F/min with direct steam injection, the boil held for 45 min, and the carpet was removed by hand at 200F and rinsed three times in a separate machine. The water volume that was removed with the carpet and by evaporation (23 gal) was added to the remaining bath, and only auxiliary chemicals calculated to bring the pure water to the initial concentration were

added. The residual dye concentrations were determined by using the analytical procedure detailed below. A second batch of carpet was mounted in the beck after bringing the bath back to 175F. The dyes were added to the recirculation stream over a 15-min period at 175F, the bath brought to the boil at 3F/min and the cycle continued as in the first run. The reuse sequence was repeated three additional runs to give a total of five dyed carpet batches.

Pantyhose Procedure

The nylon 66 pantyhose (8-lb loads) were loaded into the 2-ft Smith rotary drum machine, live steam was injected for 10 min, and cold water was entered to reach a liquor ratio of 23:1 (22.5 gal). The bath temperature was raised to 90F, the auxiliaries added, and the drum rotated for 10 min. Marvanol (Marlowe-Van Loan Corp.) RE-1824, 1% owf; Marvanol Level Tone 7.5, 1% owf; and Marvanol Penetrant 35, 0.50% owf, were added. The dyes were then added, the temperature raised at 3F/min to 200F, and the bath held at 200F for 20 min; the dye concentrations were disperse red, 0.070% owf, disperse yellow, 0.17% owf, and disperse blue, 0.016% owf. The exhausted bath was pumped at 175F after cooling into a holding tank, the dyed goods were rinsed and a finish added. Due to a volume increase during each dyeing cycle caused by steam condensation, approximately 2 gal liquor were drained from the bath after each batch to retain the same liquor ratio. After analysis, the hot bath was pumped back into the machine, raised to 175F, and the next batch of hosiery entered into the machine. The dyes and 10% of the original weight of auxiliaries were added over a 15-min period at 175F. The bath was brought to 200F at 3F/min and the cycle was completed as in the initial run. The reuse sequence was repeated eight additional runs with intermittent shade change (light to medium to dark and back to light) by altering the proportion of dyes in the three dye color line used by the company to give a total of ten dyed hosiery batches. A second series of dyeings was conducted by dropping the bath at 200F, pumping the bath back into the machine after first loading the hosiery to give a 175F system, and repeating the earlier procedure.

Table I—Dye Formulations

Shade	Disperse Dyes	Dye Concn (% owf)
Green	Blue A	2.15
	Yellow	1.30
Gray	Blue C	1.10
	Orange	0.65
	Red A	0.032
Yellow	Yellow	0.53
	Orange	0.06
Pink II (Light)	Red C	0.12
Blue	Blue A	1.75
	Blue B	0.73
	Yellow	0.03
Maroon	Red B	3.70
	Orange	0.16

Polyester Yarn Procedure

A single 1-lb spun yarn package was positioned in the Morton pressure dyeing machine for dyeing to a pink I (medium) shade, the machine filled with water, and the temperature raised to 175F. Acetic acid (0.02% owf) and carrier (Remol LE, 1% owf) were added, and the bath circulated for 2 min. The pink disperse dye (1.2%) was added slowly over a 15-min period, the machine sealed, and the temperature raised at 3F/min to 250F (272F, for the continuous filament yarn runs). The bath was circulated 30 min, cooled to 200F, and the hot bath pumped into a holding tank. The dyed package was rinsed, carried through a reduction clearing with caustic/hydrosulfite, and a finish oil was applied. The analyzed bath was pumped back into the machine, raised to 175F, and the next package entered into the kier of the machine. The dye was added as in the initial cycle, and the remainder of the dyeing sequences repeated as detailed above. Additional packages were dyed from the bath in the initial series to give a total of nine pink I packages. A series of three reuse dyeings of the pink shade was conducted on the filament yarn, followed by single-shade reuse sequences on both staple and filament packages with a green shade and a gray shade (Table I). Several multishade sequences were also dyed from single baths.

Analytical Procedure For Disperse Dyes

In a typical isolation scheme common to all three procedures, a 150-ml sample of the well mixed, exhausted bath was added to a separatory funnel along with 25 g of salt and 30 ml of benzene. After separation, the benzene layer was centrifuged for 10 min and a small aliquot passed twice through 0.22 μm Millipore filters. The resulting transparent benzene layer was subjected to analysis for residual dye concentrations.

The dye concentrations were determined optically on a Beckman Spectronic 70 spectrophotometer utilizing the Lambert-Beer Law (2, 3):

$$\log (I_0/I) = abc = A = kc$$

I_0 is the intensity of light falling on the glass cell containing the solution to be tested. I is the intensity of light transmitted through the system. a is the absorbency coefficient. b is the cell thickness in centimeters, and A is termed the absorbence (dimensionless). For a given dye and a constant glass cell type and width, a and b can be grouped together at a given wavelength λ to give a combined absorbency constant K, with units of liters per gram. The combined constant for a given dye is found by measuring the absorbence for a dye solution of given

Table II—End-to-End Color Differences of Nylon Carpet Dyed with Disperse Dyes

	Color Difference (MacAdam Units)				
	Conventional		Reuse Runs		
Position	Run I	Run II	Run III	Run IV	Run V
1	1.68	0.76	2.61	1.81	0.63
2	0.67	1.33	4.02	5.16	0.40
3	1.04	3.90	0.97	3.17	1.30
4	1.99	1.82	1.00	1.90	1.13
5	0.35	3.57	3.75	1.61	2.14
6	1.60	2.38	3.15	2.11	0.69
7	0.72	3.21	1.41	0.76	0.46
8	3.39	0.84	4.17	1.55	1.79
9	0.98	2.53	1.96	3.59	2.09
10	1.10	5.78	1.23	1.52	1.64

Table III—Lot-to-Lot Color Differences of Nylon Carpet Dyed with Disperse Dyes

Run	Color Difference Vs. Standard (MacAdam Units)
I (Standard)	—
II	1.31
III	0.44
IV	0.45
V	0.48

concentration at a chosen wavelength. Once K is defined, the concentration of an exhausted bath containing that dye can be determined simply by measuring the absorbence at the chosen wavelength and mathematically substituting in the Lambert-Beer equation.

For a multicomponent dye system, wavelengths are chosen for each dye, and the K values for each of the dyes at each of the chosen wavelengths are determined as outlined. As the absorbence of a mixture of the dyes is the sum of the individual absorbences (*4*), the individual dye concentrations can be determined for the exhausted bath by solving simultaneous linear equations based on absorbence measurements and the Lambert-Beer Law; e.g., for a three-dye system:

$$A_{\lambda 1} = K_{1\lambda 1}C_1 + K_{2\lambda 1}C_2 + K_{3\lambda 1}C_3$$
$$A_{\lambda 2} = K_{1\lambda 2}C_1 + K_{2\lambda 2}C_2 + K_{3\lambda 2}C_3$$
$$A_{\lambda 3} = K_{1\lambda 3}C_1 + K_{2\lambda 3}C_2 + K_{3\lambda 3}C_3$$

where λ represents the chosen analysis wavelength for each of the three dyes. The chosen wavelength usually corresponds to the absorbence peak of the dye found by plotting A versus λ, transversing the visible region of light (400-700 nm). In practice, after the K values are determined, the absorbence of the exhausted bath is measured at λ_1, λ_2, λ_3, and the three equations are solved in terms of the three unknown concentrations. Inexpensive calculators can be utilized to solve the equations, though the solutions can be determined manually if desired. A Hewlett-Packard 9100 B calculator was used in the present study. Utilizing the derived exhausted bath concentrations, the initial bath concentrations and the volume of the bath, the determination of the quantities of dyes to be added to the bath to regenerate the original concentrations is straightforward.

Evaluation of Dyed Materials

Visual inspections and instrumental measurements of color were used to assess level and variation between samples in a series. A Diano LSCE Automate system consisting of an automatic abridged spectrophotometer and colorimeter incorporating an 18-in. illuminated sphere for integration of the light diffusively reflected from the sample, was used for color difference calculations (*5*). The X, X', Y and Z tristimulus values were determined, which were converted mathematically to CIE X, Y and Z tristimulus values. The color differences between samples and standards were determined in MacAdam units by the Fried-MacAdam-Chickering II color difference metric (*6*). The calculated color differences placed the product uniformity on a quantitative basis.

Table IV—Lot-to-Lot Color Differences of Commercial Polyester Carpet Dyed with Disperse Dyes to a Beige Shade

Sample	Color Difference Vs. Average (MacAdam Units)
1	3.9
2	1.2
3	3.9
4	3.8
5	3.0
6	5.2
7	5.2
8	0.9
9	1.7
10	7.3
11	0.2
12	1.1
13	1.2
14	3.4
15	2.5
16	3.1
17	2.6
18	4.3
19	1.9
20	5.2

Results And Discussion

Carpet Analyses

Ten random samples were cut from each of the five nylon carpet sections (3 ft × 38 ft) that were dyed light green in the reuse sequence on the 4-ft beck. Color differences between the samples from the four reuse runs and samples from the initial (conventional) dyeing were calculated. The tristimulus values X, X', Y and Z were obtained on the Diano instrument by measuring each sample three times against a white tile standard for a total of 30 color measurements for each carpet length. The tristimulus values were first utilized with the FMC II program to determine the end-to-end variation of the carpets by averaging the tristimulus values from the 30 measurements and calculating color differences in MacAdam units between the individual sample positions and the average. The results are shown in Table II. The end-to-end variation corresponds well with that of the conventional dyeing and is well within observed industrial tolerances. The averages of the tristimulus values for all 30 measurements of each carpet section were then assimilated, and the color differences between those averages and the average tristimulus values for the conventionally dyed standard were calculated in order to determine overall lot-to-lot variation. The results are shown in Table III. For comparison with commercial tolerances, 124 samples of first quality, separate-bath beige polyester carpet were obtained from a leading manufacturer and the tristimulus values determined for all of the samples. The average tristimulus values were determined for the entire series, and the color differences calculated between the tristimulus values for each sample and the average values over all the samples. The results for 20 randomly selected samples from separate first quality lots are shown in Table IV.

In comparing the data, it was concluded that the carpet dyed in the reuse sequence met industrial criteria for end-to-end and lot-to-lot shade variation. Visual examination by several experienced plant dyers confirmed that the dyeings were first quality. The actual savings in water and chemicals for the five-run reuse sequence over five conventional dyeings are shown in Table IV, along with the calculated energy savings.

Pantyhose Analyses

In the initial pantyhose sequence, ten dyeings were conducted from the same bath with drops at 175F progressing through four light, two medium, two dark and ending with two light shade runs. Three pantyhose from each batch were randomly chosen for color difference calculations. Five swatches were cut from one leg of each pantyhose at set points down the leg, and tristimulus values were determined on the Diano instrument for the samples to give a total of 15 measurements for each batch. Color difference calculations were then derived on the FMC II program between the average tristimulus values for each batch and standards supplied by the participating company. The results are shown in Table VI. At the end of Table VI, the color differences between "just passable as first quality" hosiery samples supplied by the company and its standards are shown for the medium and dark shades. The data show that the

Table V—Chemical, Water and Energy Savings in Application of Dyebath Reuse to Disperse Dyeing

Dyed Material	Chemical: Dye Cost (%)	Chemical: Auxiliary Cost (%)	Water (%)	Energy (%)
Nylon Carpet[a]	3.7	65	65	15
Nylon Pantyhose[b]	5.2	86	90	35
Polyester Yarn[c]	1.5	82	81	42

[a]Based on the 5-cycle dyeing sequence. [b]Based on the 10-cycle dyeing sequence with a 200F drop of bath. [c]Based on the 9-cycle multicolor dyeing sequence on spun yarn. For a comparable 9-cycle sequence on filament yarn, a 50% BTU savings is calculated.

shades on the reuse runs were within the tolerance ranges required commercially by pantyhose producers.

Run III color difference was omitted from Table V due to a technician weighing error on reconstitution of the bath, resulting in gross visual shade variations. The reuse analysis system was versatile enough, however, to allow continued use of the bath with correction of shade on run IV. On run IX, the shade appeared duller than run IV, probably due to lignin sulfonate or sulfonated finish oil buildup in the bath (and hence on the fiber). An alkaline wash at a pH of 8 (0.05 g/l. monosodium phosphate × H_2O plus 2.50 g/l. disodium phosphate × 12 H_2O buffer) for 15 min at 150F restored the brightness and resulted in a slightly opaque white solution with no bleeding of dye. Run X was dyed from the reuse bath directly at a pH of 8 with the same buffer to give acceptable color differences from the standard.

A two-sequence reuse series was run on the light shade to determine the feasibility of dropping the baths at 200F. The color difference calculations were derived as for the earlier sequence, with a difference of 5.47 and 6.08 MacAdam units for the runs.

The experiments confirmed that the reuse technique could be applied readily to hosiery dyeing, that randomly switching from shade-to-shade in a color line was feasible, and that level dyeings could be obtained by dropping baths and entering goods at high temperatures (175-200F). The actual chemical and water savings for the 10-run reuse sequence over conventional procedures are shown in Table V, along with the calculated energy savings based on a 200F drop.

Package Yarn Analyses

The nine pink I spun yarn packages dyed in the initial reuse sequence were backwound and fabrics knitted on a FAK laboratory unit from yarn corresponding to the outer, three-fourths, one-half, one-fourth and inner portions of each package. The tristimulus values for the sets of five package samples were determined, the values averaged, and the averages utilized in color difference calculations against the average tristimulus values of the initial (conventional) dyed package. The results are shown in Table VII.

The remainder of the package series that were dyed from company procedures, the yarn construction, and the number of cycles per bath are listed in Tables VIII and IX. The green series C examined if the yarn construction could be switched during a series without detrimental effect. The multicolor series E and G were run to determine if shades that were not part of a color line, but which shared one or two dyes and had high exhaustion, could be dyed in sequence if judiciously selected. The color differences between the series packages and the corresponding standards are also shown in Tables VIII and IX.

The color differences for the single-shade series A-E were deemed commercially acceptable, although the differences for series A (Table VII) were considered marginal for several runs. In the initial multicolor series F, obvious visual and quantitative problems arose in converting from green to yellow (Table IX). The color difference of the final gray run in the series (package 9) was likely due to technician error, as the earlier single-shade gray run shown in Table VIII gave closer results. The multicolor series G (Table X) proved to be a wiser six-shade selection sequence for

Table VI—Lot-to-Lot Color Differences of Nylon Pantyhose Dyed with Disperse Dyes

Run	Shade	Color Difference Vs. Standard (MacAdam Units)
I (Conventional)	Light	4.36
II	Light	6.15
III	Light	—
IV	Light	6.35
V	Medium	2.53
VI	Medium	3.30
VII	Dark	4.06
VIII	Dark	4.48
IX	Light	6.04
X	Light	5.64
Medium Limit*	Medium	7.78
Dark Limit*	Dark	2.89

*Hosiery samples supplied by the participating company and termed "just passable as first quality" by plant personnel.

Table VII—Lot-to-Lot Color Differences of Spun Polyester Yarn Dyed Pink with Disperse Dyes

Pink I Shade Run (Series A)	Color Difference Vs. Standard (MacAdam Units)
I	Standard
II	1.61
III	4.40
IV	6.71
V	0.68
VI	8.06
VII	7.95
VIII	6.44
IX	8.07

Table VIII—Lot-to-Lot Color Differences of Polyester Yarn Dyed in Single-Shade Series

Series	Shade	Number of Dyes	Yarn Construction	Package in Series	Color Difference Vs. Standard (MacAdam Units)
B	Pink I	1	Filament	1	Standard
				2	1.35
				3	0.54
C	Green	2	Filament	1	Standard
				2	1.90
				3	2.35
				4	1.35
				5	1.86
			Spun	6	Standard
				7	1.47
				8	1.30
D	Gray	3	Spun	1	Standard
				2	3.11
				3	4.32
				4	6.66
				5	5.56
E	Gray	3	Filament	1	Standard
				2	3.54
				3	5.55

filament yarn, resulting in acceptable color differences from the standards with the possible exception of gray to maroon (package 6), with the maroon being marginal.

To check through-package uniformity, the color differences between the tristimulus values of each sample knit fabric and the average of the tristimulus value of the five fabrics of the standard were calculated. For example, the color differences between packages of the green shade from series C are shown in Table X. The color differences of each of the fabric samples of the standard against the average for the sample are shown for comparison.

The polyester yarn experiments demonstrated that dyebath reuse is adaptable to pressure dyeings, that lot-to-lot and through-package shade uniformity is acceptable in single-shade sequences, and that, if exhaustion is high, multicolor sequences not in a color line can be dyed satisfactorily if at least one dye overlaps and if the shade series are chosen judiciously. The actual chemical and water savings and the calculated energy savings for the nine-run, multicolor series F are shown in Table V.

Table IX—Lot-to-Lot Color Differences of Polyester Yarn Dyed in Multishade Series

Series	Shade	Number of Dyes	Yarn Construction	Package in Series	Color Difference Vs. Standard (Mac Adam Units)
F	Pink II	1	Spun	1	Standard
	Blue	3	Spun	2	3.53
				3	1.97
	Green	2	Spun	4	2.21
				5	1.48
	Yellow	2	Spun	6	24.8
				7	10.9
	Gray	3	Spun	8	5.17
				9	11.9
G	Pink II	1	Filament	1	Standard
	Yellow	2	Filament	2	2.79
	Blue	3	Filament	3	1.78
	Green	2	Filament	4	2.84
	Gray	3	Filament	5	4.33
	Maroon	2	Filament	6	8.47

Table X—Through-Package Color Differences of Polyester Yarn Dyed in Green Shade Series

Series	Package in Series	Yarn Construction	Position in Package	Color Difference Vs. Standard Average (MacAdam Units)
C	1 (Standard)	Filament	Outer	4.38
			¾	0.73
			½	1.69
			¼	1.45
			Inner	1.43
	5	Filament	Outer	1.55
			¾	2.58
			½	1.84
			¼	2.86
			Inner	3.11
	6 (Standard)	Spun	Outer	3.75
			¾	1.69
			½	2.46
			¼	1.89
			Inner	1.12
	8	Spun	Outer	2.39
			¾	1.54
			½	1.72
			¼	1.57
			Inner	1.29

Summary

Dyebath reuse in batch dyeing has been demonstrated on a pilot scale basis to be a feasible technique for reducing water usage, chemical costs and energy costs, as well as offering a low capital option for meeting pending pollution guidelines. The demonstrations of atmospheric dyeing of nylon carpet, nylon pantyhose and pressure package dyeing of polyester yarn with disperse dyes gave first quality products as determined by sophisticated color difference calculations against commercial standards and by plant personnel examination. The results paralleled those reported earlier for small scale reuse dyeings of nylon carpet with disperse and acid dyes (4). By co-ordinating closely with participating plants in the current trials, problems should be minimized in transferring the technology to in-plant demonstrations. Negotiations are now underway between the investigators, plant personnel and ERDA to conduct the commercial scale demonstrations of dyebath reuse.

The upper limits on how many dyeings per bath that can be accomplished for the various systems have not been defined. The only problem with impurity buildup that arose was the shade dulling around the tenth dyeing on the pantyhose, which was avoided by reverting to a slightly alkaline pH during the dye cycle. Negotiations are underway with Clemson University (7) and ERDA to blend dyebath reuse technology with hyperfiltration technology in one of the in-plant demonstrations. The combination of the two technologies will provide a means of lowering impurity buildup in the bath by passing a small portion of the liquid through the hyperfiltration unit after each dyeing (ca. 10% volume), and will provide a closed-loop system when the bath has reached an upper limit of utility and requires a total drop. The reduced water usage dictates a lower hyperfiltration capability than a plant would normally require, and should thus lower the considerable capital cost of such units since the size and cost is directly proportional to the water flow per unit time (7).

Acknowledgement

The authors acknowledge the dedicated assistance of R. L. Moore, L. Averette and D. Frank in compiling these data, as well as plant personnel of the participating firms. The work was funded by Energy Research and Development Administration Contract No. E(40-1)-5099, for which the investigators are most grateful.

References

(1) Cook, F. L., et al., *Energy Conservation in the Textile Industry: Phase I Report*, Energy Research and Development Administration, Washington, D. C., 1977.

(2) Giles, G., *Notes for a Laboratory Course in Dyeing*, Society of Dyers and Colourists, Bradford, W. Yorkshire, England, 1966, p53.

(3) Fisher, R., *Quantitative Chemical Analysis*, 2nd ed. W. B. Saunders Co., Philadelphia, Pa., 1961, p190.

(4) Tincher, W. C., *American Dyestuff Reporter*, Vol. 66, No. 5 1977, p16.

(5) Diano Corp., Diano/SSCE and Diano/LSCE Automatic System Operation and Calibration, Bulletin No. E1000062, Diano Corp., Mansfield, Mass. 1972.

(6) Billmeyer, F. W. Jr. and R. Smith, *Color Engineering*, Vol. 5, 1967, p23.

(7) Brandon, C. and L. Gaddis (School of Mechanical Engineering, Clemson University, Clemson, S. C.), private communication, 1977.

REUSING DYEBATHS IN JET DYEING

Wayne C. Tincher, F. L. Cook, and Lynn A. Barch

Georgia Institute of Technology, Atlanta, Ga.

ABSTRACT

Reconstitution and reuse of dyebaths have been extended to the dyeing of fabric in jet dyeing machines. Initial studies were conducted on Nomex Type 455 fabrics dyed to three commercial shades in both pilot-scale and full-scale in-plant experiments. Dyebaths have been used up to 15 times before being discharged. Color reproductibility, color uniformity, crockfastness, and flammability of samples dyed by the reuse system were comparable to conventionally dyed samples. Significant reductions in dye, chemical, water and energy requirements were achieved in the reuse dyeings. The capital cost for modification of a typical jet dyeing machine for reuse dyeing and for the required analytical instrumentation was $15,000. Annual savings possible with the reuse system are projected at over $100,000.

INTRODUCTION

The increasing prices of energy, dyes, and chemicals and the expenditures necessary to meet environmental regulations require an intensive examination of ways to reduce the costs of dyeing textile products. For the past several years a major research program in the School of Textile Engineering at Georgia Tech has been directed toward evaluation of the technical and economical feasibility of directly reusing dyebaths. At the conclusion of the dyeing phase of the cycle, instead of discharging the dyebath to the drain, the dyebath has been analyzed, reconstituted and reused for subsequent dyeings. Dyebath reuse reduces the quantities of dyes, chemicals, and energy required for the dyeing process and greatly reduces the quantity of wastewater that must be discharged and treated. In previous papers on this work the laboratory development (1-4) of the reuse system has been described and the actual demonstration of reconstitution and reuse of dyebaths in hosiery (5-6) and carpet dyeing (7) have been reported. This paper describes the laboratory development and plant experience with reuse of dyebaths in jet dyeing of fabric.

Dyeing of Nomex Type 455 (Dupont) plain weave fabrics was selected for initial studies of dyebath reuse in jet dyeing. Nomex fabric was selected because large quantities of costly auxiliaries are required to dye this material, thereby giving a significant economic advantage for the reuse procedure. Dyeing of Nomex also produces an appreciable quantity of high strength wastewater that is difficult to treat in standard biological treatment systems.

DEVELOPMENT OF THE REUSE SYSTEM

The procedure recommended by Dupont for dyeing of Nomex Type 455 is given in Table I (8). In the dyebath reuse procedure, at step 12, instead of dropping the bath to the drain, it is pumped to a holding tank. A sample of the spent bath is collected for analysis immediately before pumping to the holding tank. The fabric is rinsed and scoured in the dyeing machine by the usual procedure and then removed for drying. At the beginning of the next cycle the dyebath is returned to the dyeing machine from the holding tank. Make-up water is added to compensate for the liquid retained by the fabric and the dyeing procedure continued as indicated in Table I. The quantities of auxiliaries and dyes shown by the analysis to be required for reconstitution of the bath are added at steps 3, 5, 7,

TABLE I. Recommended Dyeing Procedure for Nomex Type 455 (8)

1. Fill dyeing machine.
2. Load fabric.
3. Add to bath at 100°F (38°C):
   1% surface active agent (Merpol HCS)
   20 g/l carrier (Dymex)
4. Run 5 minutes.
5. Add cationic dyes which have been pasted with acetic acid and dissolved in water.
6. Run 5 minutes.
7. Add in three parts over 20 minutes:
   20 g/l sodium nitrate
8. Adjust pH to 3.5 to 4.0 with either TSPP or acetic acid as required.
9. Raise to 250°F (121°C) at 3°F (1.7°C)/minute.
10. Run 1 hour at 250°F (121°C).
11. Cool to 150°F (66°C) and sample. Dye adds should be run at least one hour at 250°F (121°C) to insure penetration.
12. Cool to 120°F (49°C) and drop bath.
13. Rinse clear at 120°F to 130°F (49° to 54°C).

AFTER-SCOUR

14. Set bath at 120°F (40°C) with:
    1% surface active agent (Merpol HCS)
    5 g/l Varsol or similar hydrocarbon solvent
    0.5 acetic acid (glacial)
15. Raise to 180°F (82°C) at 3°F (1.7°C)/Minute.
16. Run 15 minutes.
17. Rinse clear at 120°F to 130°F (40° to 54°C) for 10 minutes.
18. Check for crocking; extract and dry.

and 8. The only change required is that all the dyeing salt in step 7 is added at one time (the quantity required for a reuse dyeing cycle was usually less than 20% of the amount needed for a conventional dyeing cycle).

ANALYSIS FOR RESIDUAL DYES

The very strong absorption of dyes in the visible region of the spectrum provides the simplest and most precise method for determination of dye concentrations. The absorbance, A, of a dye solution can be related to the concentration by the modified Lambert-Beer equation (9)

$$A = \log I_o/I = Kc$$

where Io is the intensity of the visible radiation falling on the sample, I is the intensity of the radiation transmitted by the sample, K is a constant including the path length of radiation through the sample and a constant related to the absorptivity of the sample at a given wavelength and c is the concentration of the absorbing species. In mixtures of absorbing species, the absorbance at any wavelength is the sum of the absorbances of each absorbing species and is given by:

$$A = K_1c_1 + K_2c_2 + K_3c_3 \ldots + K_nc_n$$

The additive characteristic of light absorption by dyes is important in the analysis of dye mixtures of the type found in spent dyebaths. For such dye mixtures, the absorbance can be measured at a number of wavelengths and the concentrations of the dyes determined by simultaneous solution of a set of linear equations of the type shown above. The wavelengths selected for the analysis are generally those for which one of the dyes has a maximum in absorbance.

A further advantage of spectrophotometers is the ready availability of a number of low cost instruments with sufficient accuracy and reproductivity for dyebath analysis. Much of the work in the current study was carried out on a single beam grating spectrophotometer costing approximately $3,000. The computations required for the analysis can be conveniently carried out on low-cost desk calculators or microprocessors. The calculations necessary for a four-dye mixture can be handled on a system costing less than $4,000.

Two major problems require solution for use of spectrophotometry for residual dyebath analysis. Some dyes are not completely in soultion and therefore do not follow the Lambert-Beer equations. Many dyebaths also show significant turbidity or background absorption which interferes with analyses based on attenuation of a light beam passing through the sample. In the current work both of these problems were circumvented by extracting the dye from the dyebath sample into an organic solvent.

After screening several solvents it was discovered that 1-octanol would almost quantitatively remove cationic dyes used in Nomex dyeings from the aqueous dyebath sample. A procedure based on 1-octanol extraction was therefore developed. Measured volumes of spent dyebath and 1-octanol are placed in a separatory funnel with approximately 50 grams of common salt and the mixture shaken vigorously for 2-one minute periods and then allowed to separate into 2 layers. The quantities of dyebath and octanol are selected to given an absorbance of the octanol layer for each shade of between 0.2 and 0.8. The octanol layer containing the extracted dyes is placed in a glass syringe containing 4 cotton balls. The cotton balls filter the octanol layer and absorb any residual water. The clear octanol solution thus obtained is placed in a 1 cm cuvette and the analysis for dyes carried out spectrophotometrically. The constants (K values) required for the analyses were determined from known concentrations of the dyes using the same extraction process used for the analyses. For dyebath analysis a spectrophotometer (Bausch and Lomb Spectronic 100) was interfaced directly with a Hewlett-Packard Model 9815A calculator so that the calculator could read absorbance directly from the spectrophotometer. Measurement of absorbances at 2 wavelengths were required for recipes containing 2 dyes and measurements at 3 wavelengths for recipes containing 3 dyes. The calculator then printed out the residual dye concentrations in the bath and the weight of dyes required to reconstitute the dyebath for the next dyeing. The system proved sufficiently simple in operation that dyehouse personnel could be trained to accurately conduct analyses in one day.

AUXILIARY CHEMICAL ANALYSIS

The majority of auxiliary chemicals used in dyeing are generally nonreactive, and are not absorbed by the substrate being dyed. Since they are not consumed or removed during the dyeing cycle, the principal loss occurs due to retention of liquor in the fabric being dyed. The auxilliary components can be added to reconstitute baths in direct proportion to the amount of make-up water added. As an example, if 10% of the dyebath is lost during the dyeing, then 10% of the original quantities of auxiliary chemicals are added to the dyebath in preparation for the next run. This approximation method was used for the addition of surfactant, dyeing salt and acid used in all Nomex dyeing cycles.

Unlike these auxiliaries, the dyeing carrier was absorbed strongly by the Nomex fabric. Exhaustion of the carrier is therefore different from that of other auxiliaries, and a different method of reconstitution was required for this component. The carrier problem was further complicated as initial studies indicated that the carrier consisted of unequal portions of two chemical components which exhibited different exhaustions. It was necessary to first determine the nature of the chemical components and the proportion of each in the carrier. Nuclear Magnetic Resonance Spectroscopy was employed to analyze for the two carrier components in exhausted dyebaths. The exhaustion was sufficiently similar from cycle to cycle so that an average exhaustion could be used to reconstitute the dyebath. The analysis revealed that component A of the carrier (35%) was approximately 65% exhausted and component B (65%) was 55% exhausted. The laboratory dyeings showed that adding 65% of the original amount of blended carrier each cycle gave sufficiently accurate reconstitu-

tion of the dyebath without creating problems in Nomex dyeing.

PILOT-SCALE DYEINGS

Pilot-scale evaluation of the dyebath reuse system was conducted on a Gaston County Minilab lab dyeing machine.

A procedure similar to the one shown in Table I was employed with the exception that excessive foaming problems on both conventional and reuse runs required scouring and final rinse to be carried out externally. Three large volume commercial shades - yellow, black and blue - were selected for the pilot scale studies. The first series of dyeings consisted of 4 yellow shades dyed in the same bath, the second series consisted of 4 black shades in the same bath and the third series 3 blue shades. The yellow shade was dyed using two cationic yellow dyes, the blue with a red and blue dye and the black with a red, yellow and blue dye. A liquor ratio of 12:1 was used for all laboratory dyeings.

Analyses of the spent dyebaths for residual colorants were carried out as described previously. Reconstitution of auxiliaries was based on the volume of make-up water required except for the carrier. The carrier concentration was reconstituted by addition of 65% of the amount specified in the conventional dyeing recipe.

Each of the laboratory dyeings were evaluated by measurement of color uniformity, color reproducibility and fastness properties. Since a major use for Nomex fabrics is in protective clothing, flammability characteristics were also determined.

Color of all dyed samples was measured on the ACS Model 400 Spectrosensor. Color differences between each sample and the conventional run were calculated using the 1976 C.I.E. L*a*b* color difference equation (10). Results are given in Table II. The color differences were within limits usually considered as commercially acceptable for these shades on Nomex fabrics. Visual inspection and color measurements on each of the reuse samples also showed that the dyeings were level.

TABLE II. Color Difference Values Between Conventional and Reuse Samples Pilot-Scale Series Under Light Source D

Sample No.	L*	a*	b*	DL	DE
Yellow					
(conv.)	79.31	9.86	86.77	--	--
Yellow 2	78.18	10.51	86.44	-1.13	1.34
Yellow 3	79.14	10.73	88.27	-0.16	1.75
Yellow 4	78.53	11.08	87.17	-0.77	1.50
Black					
(conv.)	14.31	0.32	-1.45	--	--
Black 2	14.69	0.35	-1.66	0.38	0.43
Black 3	14.78	0.38	-1.50	0.46	0.47
Black 4	14.96	0.26	-1.63	0.65	0.67
Blue					
(conv.)	39.55	5.10	-32.4	--	--
Blue 2	30.81	-5.18	-32.8	0.26	0.45
Blue 3	30.35	-4.87	-32.8	-0.20	0.47

Colorfastness to crocking was determined using AATCC TEST method 8-1977 (11). Results are shown in Table III. No differences were observed in crockfastness between samples dyed by conventional and reuse dyeing cycles.

TABLE III. Colorfastness to Crocking - Pilot Scale Dyeings

Shade	Cycle	Chromatic Transference Scale Rating Wet	Dry
Yellow 1	Conventional	5	5
Yellow 2	Reuse	5	5
Yellow 3	Reuse	5	5
Yellow 4	Reuse	5	5
Black 1	Conventional	4	4
Black 2	Reuse	4	4
Black 3	Reuse	4	4
Black 4	Reuse	4	4
Blue 1	Conventional	5	5
Blue 2	Reuse	5	5
Blue 3	Reuse	5	5

Flammability was evaluated by Federal Test Method Standard Number 191-5003.2, "Flame Resistance of Cloth, Vertical" (12). Average char length for each of the dyeings is shown in Table IV. No increase in char length resulted from reusing dyebaths.

These pilot scale studies indicated that Nomex fabric can be dyed by the reuse system with acceptable color reproducibility, and uniformity and with no adverse effects on properties of the dyed fabrics. A full-scale plant test of reconstitution and reuse of dyebaths in Nomex dyeing was therefore planned and conducted.

TABLE IV. Average Char Length - Pilot Scale Dyeings

Run Number	Cycle Type	Average Char Length (inches)	Standard Deviation
Yellow 1	Conventional	1.6	0.3
Yellow 2,3,4	Reuse	1.4	0.4
Black 1	Conventional	1.5	0.6
Black 2,3,4	Reuse	1.7	0.4
Blue 1	Conventional	1.6	0.4
Blue 2,3,4	Reuse	1.4	0.4

PLANT DEMONSTRATION DYEINGS

In-plant dyeings were carried out on a Gaston County Aqualuft 4-port Jet Dyeing Machine. The same shades were dyed as in the pilot-scale experiments. A procedure similar to the one shown in Table I was used in the plant dyeings. A summary of the plant runs is given below:

Series I	Yellow	6 dyeings
Series II	Yellow	7 dyeings
Series III	Black	3 dyeings
Series IV	Blue	15 dyeings

The only difference between Series I and II was that benzene was used as the extraction solvent in the analysis of spend dyebaths in Series I and 1-octanol was used in Series II. Series III was originally planned to include 6 dyeings but the dyebath was lost to drain due to operator error after the third dyeing. In Series IV the first 10 dyeings were carried out with the usual quantity of carrier but problems with dye streaks were encountered and the quantity of carrier was increased by approximately 50%. Dye streaks were also encountered at this time on conventional dyeings so the problem was not related to reuse of dyebaths. Acceptable dyeings were obtained in the last five cycles with the increased carrier concentration.

Evaluations of plant dyed samples were carried out in the same manner as previously described for the pilot-scale dyeings.

Results of color measurements are given in Table V, crockfastness testing in Table VI and flammability test results in Table VII. With the exception of the yarn streak problems noted previously for the early blue dyeings, all samples dyed were judged to be commercially acceptable. No significant differences were found between the fabrics dyed by the conventional and the reuse systems.

REDUCTION IN DYEING COSTS WITH DYEBATH REUSE

The water, chemical and dye requirements for the conventional and reuse cycles were monitored for all three shades dyed in the in-plant demonstration. A summary of the materials requirements for a conventional and average reuse cycle is given in Table VIII. The dyeing machine was not equipped with steam flow monitoring equipment so energy requirements for conventional and reuse dye cycles were caluclated assuming a incoming water temperature of 82°F, a maximum dyeing temperature of 225°F, pumping the dyebath to the holding tank at 140°F, and pumping the spent bath back to the dyeing machine at 120°F. Calculated energy requirements for a conventional cycle were 7.06×10^5 BTUs and for a reuse cycle 5.19×10^5 BTUs, a reduction of over 25%.

From the calculated energy requirements and the quantities of water, chemicals and dyes for conventional and reuse cycles shown in Table VIII it is possible to calculate cost reductions with reconstitution and reuse of dyebaths for Nomex dyeing. Using current costs for chemicals, dyes and energy and

TABLE V. Color Differences by FMC II (13) and CIE L*a*b* (10) Equations for Plant Demonstration Series (Light Source D)

Sample No.	DE (CIE L*a*b*)	DE (FMCII)
Series II		
Yellow 1	Conventional	Conventional
Yellow 2	1.77	1.50
Yellow 3	1.27	3.20
Yellow 4	4.50	5.40
Yellow 5	4.41	3.72
Yellow 6	1.94	5.61
Yellow 7	4.98	5.42
Series III		
Black 1	Conventional	Conventional
Black 2	0.69	1.50
Black 3	0.59	1.21
Series IV		
Blue 1	Conventional	Conventional
Blue 2	0.88	1.12
Blue 3	0.37	0.59
Blue 4	0.49	0.67
Blue 5	0.63	0.84
Blue 6	4.68	9.19
Blue 7	3.63	6.94
Blue 8	2.45	5.15
Blue 9	3.06	4.46
Blue 10	3.25	3.77
Blue 11	2.26	3.68
Blue 12	1.39	3.32
Blue 13	2.34	4.09
Blue 14	2.09	3.70
Blue 15	1.36	3.44

TABLE VI. Colorfastness to Crocking - Plant Demonstration

Shade	Cycle Type	Chromatic Transference Scale Rating Wet	Dry
Yellow 1	Conventional	5	5
Yellow 2	Reuse	5	5
Yellow 3	Reuse	5	5
Yellow 4	Reuse	5	5
Yellow 5	Reuse	5	5
Yellow 6	Reuse	5	5
Yellow 7	Reuse	5	5
Black 1	Conventional	4	4
Black 2	Reuse	4	4
Black 3	Reuse	4	4
Blue 1	Conventional	5	5
Blue 2	Reuse	5	5
Blue 3	Reuse	5	5
Blue 4	Reuse	5	5
Blue 5	Reuse	5	5
Blue 6	Reuse	5	5
Blue 7	Reuse	5	5
Blue 8	Reuse	5	5
Blue 9	Reuse	5	5
Blue 10	Reuse	5	5
Blue 11	Reuse	5	5
Blue 12	Reuse	5	5
Blue 13	Reuse	5	5
Blue 14	Reuse	5	5
Blue 15	Reuse	5	5

TABLE VII. Average Char Length - Plant Demonstration

Shade	Run No.	Cycle Type	Average Char Length (in.)	Standard Deviation
Yellow	1	Conventional	1.7	0.4
Yellow	2-7	Reuse	1.5	0.4
Black	1	Conventional	1.9	0.3
Black	1,2	Reuse	1.7	0.4
Blue	1	Conventional	1.6	0.4
Blue	2-15	Reuse	1.6	0.4

TABLE VIII. Material Requirements for Conventional and Reuse Dyeings

Series I Yellow	Fabric (pounds)	Water (gallons)	Surfactant (gallons)	Carrier (gallons)	Acid (gallons)	Salt (pounds)	Yellow Dye 1 (pounds)	Yellow Dye 2 (pounds)
Conv.	556	595	1.0	50	5.0	100	12.95	2.50
Reuse	672	91	0.2	36	1.0	20	15.59	3.01

Series II Yellow	Fabric (pounds)	Water (gallons)	Surfactant (gallons)	Carrier (gallons)	Acid (gallons)	Salt (pounds)	Yellow Dye 1 (pounds)	Yellow Dye 2 (pounds)
Conv.	700	595	1.0	50	5.0	100	16.54	3.20
Reuse	705	73	0.2	35	0.8	15.5	15.68	3.04

Series III Black	Fabric (pounds)	Water (gallons)	Surfactant (gallons)	Carrier (gallons)	Acid (gallons)	Salt (pounds)	Black Dye (pounds)
Conv.	685	595	1.0	50	2.5	100	109.6
Reuse	681	60	0.2	35	0.4	15.5	99.5

Series IV Blue	Fabric (pounds)	Water (gallons)	Surfactant (gallons)	Carrier (gallons)	Acid (gallons)	Salt (pounds)	Blue Dye (pounds)	Red Dye (pounds)
Conv.	461	595	0.5	35	5.0	100	15.89	0.50
Reuse	506	60	0.2	35	0.8	15.5	17.45	0.37

assuming that a dyebath can be used an average of 10 times before discharge, the costs of conventional and reuse dyeings were calculated and the savings achieved by reuse of dyebaths determined. The savings in dollars per cycle and cents per pound are shown in Table IX.

The plant at which the demonstration was conducted dyes an average of 875 cycles per year on the jet machine. Approximately 30% of the cycles (263) are black, 40% (350) are yellow and 20% (175) are blue. About 10% of the cycles are other miscellaneous shades. The annual savings achieved by adoption of dyebath reuse are expected to exceed $110,000 per year. The capital equipment costs for the analytical system, pumping system, and holding tank were less than $15,000.

The reduction in volume of wastewater discharged with dyebath reuse was of particular interest at the demonstration plant site due to problems with overload of the treatment facilities. Conventional dyeing produced over 500,000 gallons of spent dye liquor per year. Reuse of dyebaths can reduce this volume to 140,000 gallons per year, a reduction of 72% in the quantity of high strength waste entering the treatment plant.

TABLE IX. Savings by Reconstitution and Reuse of Dyebaths in Nomex Dyeing

Shade	Cost Reduction Dollars per Year	Cost Reductions Cents per Pound
Yellow	$117.70	17 (706¢/cycle)
Black	$179.63	26 (685¢/cycle)
Blue	$141.89	28 (503¢/cycle)

CONCLUSIONS

The current work has demonstrated that reconstruction and reuse of dyebaths can be extended to dyeing of fabric in jet dyeing machines. Plant personnel can be easily trained to operate the new system and reuse dyeings are essentially identical to conventional dyeings in important color, fastness and flammability characteristics. In the dyeing of Nomex substantial cost reductions approaching 25 cents per pound of fabric dyed can be achieved by the reuse system. These results should make reconstitution and resue of dyebaths very attractive for dyeing of fabrics in jet dyeing equipment.

REFERENCES

(1) Tincher, W. C., Conservation of Water, Chemicals, and Energy in Dyeing Nylon Carpet, Final Technical Report ERC-07-77, Office of Water Research and Technology Project No. A-064-GA, Georgia Institute of Technology, Atlanta, Georgia, November 1977.

(2) Tincher, W. C., American Dyestuff Reporter, Vol. 66, No. 5, May 1977, p36.

(3) Cook, F. L. and Tincher, W. C., Textile Chemist and Colorist, Vol. 10, No. 1, January 1978, p1.

(4) Cook, F. L. and Tincher, W. C., "Energy Conservation in Textile and Polymer Processing", ACS Symposium Series, No. 107, American Chemical Society, Washington, D.C., 1979, p201.

(5) Cook, F. L., Tincher, W. C., et al., In-Plant Demonstration of Dyebath Reuse Applied to Hosiery Dyeing, Final Technical Report Department of Energy Project No. EY-76-S-05-5099, Georgia Institute of Technology, Atlanta, Georgia, April, 1979.

(6) Cook, F. L., Tincher, W. C., et al., Textile Chemist and Colorist, Vol. 12, Nov. 1, January 1980, p.1.

(7) Wincher, W. C., Cook, F. L., et al., In-Plant Demonstration of Energy Optimization in Beck Dyeing of Carpet, Final Technical Report Department of Energy Project No. DE-AS05-76ES4008, Georgia Institute of Technology, Atlanta, Georgia, July, 1980.

(8) Dyeing and Finishing Nomex III Type 455 Aramid Staple, Preliminary Information Memo No. 413, E. I. duPont de Nemours & Co., Inc., Wilmington, Delaware, May 1979.

(9) Willard, H. H., Merritt, L. L., and Dean, J. B., Instrumental Methods for Analyses, 4th Edition, Van Nostrand Rinehold Company, New York, 1965, p77ff.

(10) Official Recommendation on Uniform Color Spaces Color-Difference Equations Metric Color Terms, Supplement No. 2 to CIE Publication No. 15, Colorimity (E-1.3.1), Commission Internatinale de l'Echange, May 1976.

(11) "Colorfastness to Crocking: AATCC Crockmeter Method", AATCC Test Method 8-1977, Technical Manual of the American Association of Textile Chemists and Colorists, Vol. 57, 1978, p132.

(12) "Flame Resistance of Cloth Vertical", Federal Test Method Standard Number 191, Method 5903.2, July 1971.

(13) Judd, D. B. and Wyszecki, G., Color in Business, Sciences, and Industry, 3rd Edition, John Wiley and Sons, New York, 1975, p322.

Textile Chemist and Colorist
January 1980 / Vol. 12, No. 1

Nylon Pantyhose

Plant Trials on Dyebath Reuse Show Savings In Energy, Water, Dyes and Chemicals

by F. L. COOK, W. C. TINCHER, W. W. CARR, L. H. OLSON and M. AVERETTE
Georgia Institute of Technology, Atlanta, Ga.

ABSTRACT

Researchers at Georgia Tech have developed a dyeing system designed to permit reuse of dyebaths over and over.

At the end of each dyeing cycle, the dyebath is analyzed and reconstituted to the dye/chemical concentrations required for the next cycle.

To demonstrate the commercial feasibility of the system, Adams-Millis Corp. tested it on pantyhose made from nylon 6 and nylon 66. Results: 19% reduction in dye usage; 35% savings in chemical auxiliaries; 43% drop in wastewater costs; 57% savings in energy. An average of 30 batches (and as many as 41) are being dyed in the same dyebath.

KEY TERMS

Chemical Auxiliaries
Disperse Dyes
Dyeing
Energy Conservation
Knitgoods
Nylon
Pantyhose
Water Consumption
Waste Disposal

DYEBATH reuse has been under pilot plant development at Georgia Tech for some time (*1-4*). The studies have shown that—properly analyzed and properly replenished—dyebaths can be used again and again without sacrificing the quality of the finished goods.

The advantages of dyebath reuse are obvious: less water to heat, less effluent to treat, reduced consumption of energy, of dyes and of chemical auxiliaries.

But the true test of any process modification lies in its commercial application. This is a report of just such a test—the dyeing of nylon pantyhose.

Prime Candidate

The disperse dyeing of nylon pantyhose was recognized early in the Georgia Tech studies as a prime candidate for rapid plant implementation of dyebath reuse for the following reasons.

- The principal piece of equipment used to dye pantyhose is the rotating drum machine. The machines operate at long liquor ratios (20:1, 25:1), they allow steam to escape freely during heatup and hold cycles, and they generally are dumped directly into sewers rather than pumped to heat exchangers.
- Also, pantyhose formulations—from a chemical standpoint—are narrowly defined. Shades generally are grouped in variations of brown, and frequently are derived from the same three disperse dyes by altering their relative proportions.
- Auxiliary chemicals used in dyeing pantyhose are not exhausted to any extent, and they are not destroyed in the dyeing process.
- Fiber content of pantyhose is another point in favor of dyebath reuse. Invariably they are made from either nylon 66 or nylon 6.

Pilot Plant Research

Pilot scale research of dyebath reuse for pantyhose progressed rapidly, allowing shade switching as well as alteration of fiber types during reuse sequences (*1, 3*). Initial research resulted in funding from the U.S. Department of Energy to expand the technology into plant trials, and Adams-Millis Corp. of High Point, N. C., offered its personnel and its facilities for that purpose.

Materials And Methods

All dyebaths contained the same auxiliaries, and all shades were derived from the same three disperse dyes. The auxiliaries—supplied by Marlowe-Van Loan Corp.—consisted of Marvanol RE-1824, an *in-situ* scouring/leveling agent; Marvanol Level Tone 7.5, a leveling agent; and Penetrant 35, a wetting agent. The final concentration of auxiliary chemicals corresponded to those shown in Col. 2 of Table IV. For dyebath reuse sequences, the final concentrations were approximated. To protect proprietary interests, the dyes used are identified only as Disperse Yellow, Disperse Red and Disperse Blue.

All dyeings were conducted on a standard 100-lb Smith rotary drum machine. Modification of the machine for the demonstration mainly involved introduction of a holding tank/pumping system to accommodate the spent dyebath. The design of the reuse system is

Reconstitution and Reuse of Dyebaths

shown in Fig. 1. The insulated stainless steel holding tank was on the floor above the dyeing machine, allowing a gravity return feed.

A Gould Model 316 centrifugal pump driven by a 2 hp/1800 rpm TEFC motor was used to transfer the dyebath to the tank. A Taylor Ful-Flex Controller (already on the machine) was used to control temperature, and a calibrated site glass (5-gal increments) was attached to the side of the drum machine for volume control.

A Brooks Propeller Meter (Model 3312-03A31AA) was used to measure total water flow, and a J. W. Sweet TDI-100 Flow Monitor was used to monitor steam flow via the pressure drop across a venturi inserted into the steam line. A chemical add system consisting of a 2-gal stainless steel tank attached to a 0.25-in. ss schedule 40 pipe positioned across the width of the machine with equally spaced 3/16 in. holes was added for metering in concentrated dye dispersion. A spigot was attached to the side of the drum to provide a convenient drainage port for obtaining a dyebath sample for analysis at the end of the dyeing cycle.

pH was measured by an Extech Model 6080 hand held combination pH/temperature meter. The extracted dyebath sample was filtered (if necessary) by pushing the solution through a syringe fitted with a 13 mm Swinney attachment (Millipore Corp.) containing disposable filters designed to handle organic solvents. A standard desktop centrifuge was used in the separation of the organic and aqueous layers.

The legs of the pantyhose consisted of either nylon 6 or nylon 66 made into one of two high volume Adams-Millis styles. All hose were pulled randomly from stock. A standard load of nylon 66 hose weighed 96 lb, a standard, less dense load of nylon 6 weighed 84 lb. The same amount of water (230 gal) was used in processing both fiber types. Thus the liquor ratio varied from 20:1 for nylon 66 to 23:1 for nylon 6.

Dyebath analyses were made using an integrated Bausch & Lomb Spectronic 100 spectrophotometer/Hewlett-Packard 9815A desktop computer system. The instruments were connected by an interface designed and built at Georgia Tech. The interface provided logic level conversion and complemented the spectrophotometer in providing standard binary coded decimal (BCD) encoding to the computer. The design criteria dictated: (1) a high impedance for low current demand from the resistor-transistor logic (RTL) circuitry; (2) an adjustable threshold for the "logic 0" to "logic 1" transition to permit variation for optimum noise immunity; and (3) provision of a copy of the BCD output on a light emitting diode (LED) display using a seven segment to resistor-transistor logic (TTL) decoder to show that level conversion and BCD encoding were being accomplished. The interface was powered by an independent 5 volt, 1 amp regulated power supply with short circuit and oven temperature protection. Details of the interface circuitry have been published elsewhere (5).

The programs written for the analysis system were designed to provide a conversational mode of interface between the dyer and the system data. The interactive interface was accomplished by printing alphanumeric questions to the dyer on the computer tape printer which solicited responses through the keyboard; i.e., entering the number "1" for "yes" and the number "2" for "no." The programs that were developed covered not only dyebath reuse analysis but also provided general utility routines for evaluation of dye lot strength, recipe storage and changes, and dye add calculations. All of the programs and data were stored on magnetic tape, available to the HP-9815A through its built-in tape drive keyed by program control.

The main dyebath analysis program flow began with a request to load a sample in the spectrophotometer and set the wavelength successively to the proper values for individual dye absorbance (A) peaks (2–4). Two absorbance readings were taken automatically at each wavelength with a half-second interval between readings. If these values were equal, program processing continued. If the readings were not equal, the program returned for another pair of readings until the data stabilized.

The program next tested for large values of absorbance where the Lambert-Beer Law would not hold, and requested that the spectrophotometric sample be diluted 1:1 (A ≥ 1.5) or 3:1 (A ≥ 2.0) depending on the absorbance value. Detailed instructions for the dilution were given to the dyer via the alphanumeric printout.

Next the program inquired whether the subsequent run was to be a reuse run or not. If not, intermediate values—such as dye concentrations found in the analysis—were printed, and, later, total dye needs without reused dye liquor were detailed. Reuse runs assumed the use of a standard set of K values for the current dye lot (2–4). The alternate path—not a regular reuse run—also offered the opportunity of selecting another set of K values for a different set of dyes.

The program then proceeded to calculate and store the concentrations of dye present in the bath sample pre-

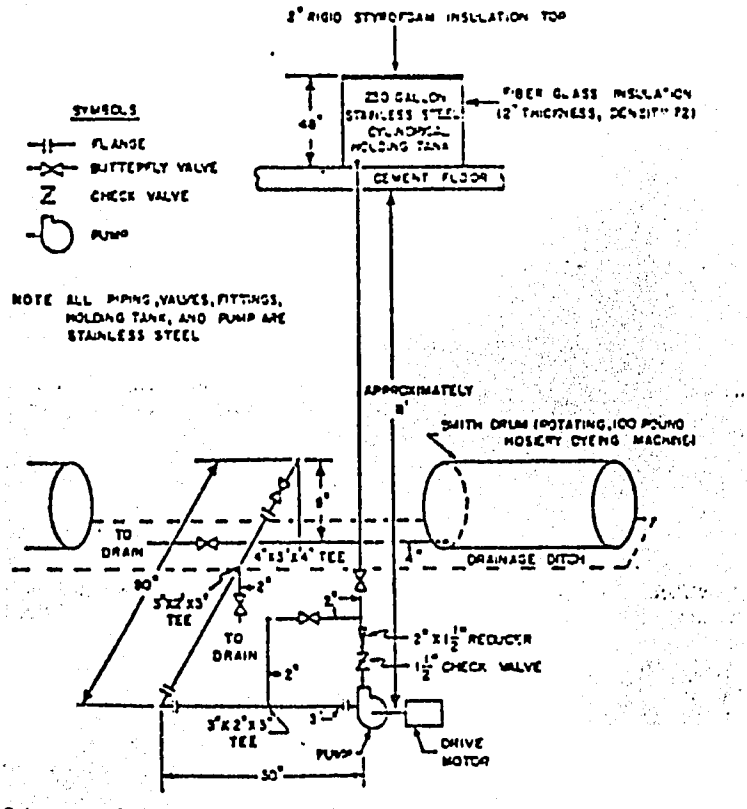

Fig. 1. Schematic of reuse system.

sented for analysis. The concentrations were in units of grams per gallon, consistent with measurement systems in use at Adams-Millis. The total quantities of dyes in a 135-gal reuse bath (volume returned from the holding tank) was printed.

The next step was to determine which shade was to be subsequently dyed. File space had been created for up to 20 shades on each of the nylon 6 and nylon 66 fabrics. The program requested entry of the fiber type to be dyed and asked if a shade number/name cross reference listing was needed. If needed, the shade listing was generated. On receiving the appropriate shade number, the dye recipe data file was loaded. The dye concentration recipes were based on the weight of fabric to be dyed. Each dye concentration was modified at this point by a dye strength factor which changed with each new dye lot. The dye strength factors accompanied the regular or special dye K value files and were generated in the auxiliary "Dye Strength" program which permitted entry of new dye lots into the system.

The program then asked for the fabric weight to be dyed, thereby determining the total dye and auxiliary needs for that particular dyeing. If the bath dye mass for any of the dyes exceeded the total quantity needed for the next dyeing, a warning was issued to the dyer to restrict the quantity of reuse bath in the next dyeing to just the amount needed to satisfy the recipe constraints. Then the quantities of dyes needed for a regular reuse run (with a modified quantity of reuse bath, if necessary) were printed. If the run was not a regular reuse run, the total dye quantities required by the recipe were also printed. The correct total of dye auxiliaries and finish auxiliaries needed (predetermined and fixed by fiber type) were printed in a similar fashion, with or without reuse.

Finally, the dyer was offered the option of having the entire dye procedure printed so that on a reuse run a technician could be handed the printout of dye and auxiliary quantities to weigh and the procedure for conducting the dyeing. Upon completion of this step, program control was returned to the monitor program to determine the next major program function to be undertaken.

Total time for the analysis, including the extraction and filtration step, was ten minutes. Analyses were completed, dyes and auxiliaries for the subsequent dyeings weighed, and solutions prepared well before addition to the dyebath for the next batch was required. The dyer, who had no formal technical training, was running the analyses himself after two days of training, and has handled the analyses alone since the project ended. A full description of all the developed programs has been published (5).

Table I—Conventional Adams-Millis Procedure For Dyeing Pantyhose in 1976

	Time (min)
I. Dyeing Batch I	
1. Load machine	3
2. Inject live steam 10 min at 200F	12
3. Fill with cold water, and raise to 90F	7
4. Add auxiliary chemicals, run 10 min	10
5. Add dyes	1
6. Raise temperature at 3F/min to 200F	45
7. Run 20 min at 200F	20
8. Sample; make add if necessary	10
9. Dump the bath to drain when correct shade is obtained	3
	111
II. Finishing Batch I	
10. Refill with cold water, rinse 10 min; dump the bath	20
11. Refill with cold water	3
12. Inject steam rapidly to achieve	4
13. Add finish chemical and run 10 min at 110F	10
14. Dump the bath to drain	3
15. Unload the pantyhose	3
	43

Cycle I Total: 154 min

1976 Conventional Process

The process used by Adams-Millis when the co-operative program with Georgia Tech began in 1976 is detailed in Table I. Two runs by the 1976 process were monitored to provide a baseline for overall savings of the project.

1978 Optimized Process

The process detailed in Table I was considered to be unnecessarily wasteful, with higher energy and material consumption than necessary to conduct the conventional runs. Adaptation of dyebath reuse to such a process was therefore unwarranted, as the savings due to reuse would have been masked by those achieved by simple optimization. Recommendations were therefore made to the plant dyer for optimizing the conventional process, which led to his development of the 1978 process detailed in Table II. The major changes effected in the 1976 process were:

- Reduction of the hold cycle temperature from 200F to 160F.
- Adding dyes to the fresh bath and rapidly raising the temperature to 160F before adding the pantyhose to the machine. The modification allowed faster heatup and thus shortened the dye cycle, increasing production.
- Elimination of several rinses.

The major effect of the changes was to reduce the cycle time from 154 minutes to 100 minutes. Savings in energy and water realized through these changes were also substantial. The dyebath reuse procedure was modified accordingly for the demonstration to correlate with the 1978 optimized process. Fifteen baseline runs were also conducted and monitored using the 1978 process so that savings introduced solely by dyebath reuse could later be determined.

Table II—Conventional Adams-Millis Procedure For Dyeing Pantyhose as of October 1978

Step
1. Fill with cold water
2. Add auxiliary chemicals, run 3 min
3. Raise temperature as rapidly as possible to 150F.
4. Add disperse dyes, start basket turning
5. Run machine 2 min
6. Load goods evenly while turning machine downward into bath
7. Run 45 min at 160F
8. Sample; made add if necessary
9. Dump the bath
10. Refill with cold water
11. Inject steam rapidly to reach 110F
12. Add finish chemical and run 10 min at 110F
13. Dump the bath
14. Unload the pantyhose

Approximate Running Time (Zero Adds) = 1 hr 40 min (100 min)

Construction Of Dyebath Reuse Process

Several preliminary experiments were conducted in the plant before the dyebath reuse procedures were finalized. First, minimization of water loss due to machine overflow was sought. Using the water meter, the volume occupied on the sight gauge by the hosiery itself was determined. In addition, the average figure for the volume of water retained by the saturated hosiery on draining the bath was also determined. The results, shown in Table III, were subsequently used in the compilation of energy balances for the reuse procedures.

Table III—Results of Volume Experiments on Pantyhose

		Initial Fill				Second Fill					
				Volume Occupied by Hosiery					Water Volume Retained by Hosiery		
Nylon Type	Hosiery Wt. (lb)	Sight Glass (gal)	Meter (gal)	(gal)	(gal/lb)	Sight Glass (gal)	Meter (gal)	Volume Occupied by Hosiery (gal)	(gal)	(gal/lb)	Water Volume Retained by Full Batch (gal)
66	44.6	200.0	194.5	5.5	0.123	200.0	167.3	5.5	27.2	0.610	58[a]
6	50.5[b]	200.0	190.0	10.0	0.198	200.0	168.3	10.0	21.7	0.430	36[b]

[a]Based on the standard weighed load of 96 lb of nylon 66.
[b]Based on the standard weighed load of 84 lb of nylon 6.

The researchers discovered that the Adams-Millis dyer altered the concentration of auxiliary chemicals instead of using the same concentrations as those established in the pilot research. The pilot scale concentration levels are compared in Table IV with those in use at Adams-Millis at the beginning of the demonstration project. No clear explanation was given for altering the concentrations although it was speculated that the switch to the 160F dyeing temperature and subsequent concern for leveling were the major factors. But because the analytical constants for the demonstration were derived with the original auxiliary concentrations, and since the effect of the altered concentrations on the spectrum "background" could not be ascertained theoretically, the dyebath auxiliary levels were returned to the original values developed at Georgia Tech.

Return to the original values—which were considerably lower than the revised values—conserved chemicals. In addition, the RE-1824 auxiliary chemical was found to be a mild disperse dye retarder. For example, to reduce a shade in the conventional runs, the dyer traditionally added more RE-1824 and raised the hold temperature to 170F. A dyebath sample was analyzed for disperse dye concentration before and after the partial stripping was effected. The reductions in percent exhaustion—and therefore dye on the fiber—were: Disperse Red, 7%; Disperse Yellow, 6%; and Disperse Blue, 7%. The higher level of RE-1824 in the altered plant formulation had therefore also resulted in increased dye requirements which had been gradually compensated for by the dyer. Shade formulations thus had to be adjusted downward on returning to the original auxiliary levels, consequently conserving dyes.

Table IV—Comparison of Initial and Altered Concentration of Auxiliaries in the Dyebath

Chemical	Initial Conc (% owf)[a]	Altered Conc (% owf)
RE 824	1	3
LT-7.5	1	1.5
P-35	0.5	0.25

[a]Reverted the plant back to these levels.

Experiments were conducted next to determine the effect of any of the proposed prescour on the final dyebath pH. On conventional Runs 7 (nylon 66, LBE shade) and 8 (nylon 6, BRM shade), which did not include a prescour, the pH was checked at various stages in the cycle to determine the controlling factor in the final pH. The results are shown in Table V. The major factor in the pH change, which adjusted the bath from an initial slightly acidic pH of about 6.3 to an alkaline pH of about 8.6, was the goods themselves. Apparently the spinning oils, knitting oils, oligomers and other impurities that were leached from the nylon by the bath were present in sufficient quantities to strongly influence the pH toward the basic side. The average pH value (8.5) for the subsequent 15 conventional cycles was found to be in the same basic range.

To assess the effect of the proposed prescour step on the dyebath pH, a simulated reuse run was conducted during the 15 conventional-cycle sequence. The finished hosiery of Run 8 was removed from the softener bath, 1% RE-1824 was added as in the pilot scale research, and the preweighed greige hosiery for Run 9 was added to the machine. The hosiery was rotated for five minutes at ambient temperature, and the prescour bath was dropped to the sewer. The wet hosiery was removed, the machine was filled with fresh water, and the run continued in the usual manner. Measurements of pH were taken on the prescour bath and the subsequent dyebath at various steps, and the results are recorded in Table V. The goods thus contributed the bulk of the pH change (1.73 units, 80% of the total). The prescour was concluded to have little effect on the final dyebath pH, and thus on the dyeing behavior of the disperse system. The experiment also indicated, however, that the prescour as performed had little influence on removal of fiber impurities that were determining the final pH. At the ambient temperature (ca. 110F), the RE-1824 auxiliary did not possess the scour action that it apparently exhibited at 160F.

Based on the pH experiment, the decision was made to split the planned 30-cycle reuse sequence for the demon-

Table V—Variation of pH with Stage in the Conventional Cycle and the Simulated Reuse Cycle

				pH									Change Attributed to to Goods	
				Prescour		Dyebath								
Run No.	Cycle	Nylon Type	Shade Code	After RE-1824	At End	Incoming Water	After Steam	After Auxiliaries	After Dyes	After Goods	End of Run	Overall Change	pH	% of Total
7	Conventional	66	LBE			6.24	6.70	6.80	7.00	7.90	8.62	2.38	1.62	68
8	Conventional	6	BRM			6.40	6.72	6.73	6.87	—	8.66	2.26	1.79	19
9	Simulated Reuse	6	BRM	8.02	7.93	6.42	6.75	6.84	6.86	7.62	8.59	2.17		

Table VI. Reuse Procedure With Prescour for 5-Cycle and 17-Cycle Sequences

Step
1. Load goods evenly to machine full of softener water from previous cycle
2. Run for 5 min
3. Drop prescour bath to drain
4. Unload wet hose from machine
5. Drop dyebath into machine (130-140 gal)
6. Add water until 160 gal reached on sight glass
7. Raise temperature as rapidly as possible to 160F with rotation.
8. Add auxiliary chemicals
9. Add dispersed dyes
10. Run 2 min
11. Reload goods evenly while turning downward
12. Run 45 min
13. Sample: make add if necessary
14. Sample dyebath for analysis
15. Pump dyebath to holding tank and drain residual water in machine
16. Add 160 gal water (fill to 200 gal on sight glass).
17. Raise to 110F
18. Add finish chemical
19. Run 10 min
20. Unload goods
21. Return to Step 1

Table VII. Reuse Procedure Without Prescour for 14-Cycle Sequence

Step
1. Drop dyebath into machine (130-140 gal)
2. Drain side pipe
3. Add make-up water to 190 gal on sight glass
4. Add steam to 160F
5. Add auxiliary chemicals
6. Add disperse dyes (plus 3 gal water)
7. Load goods (dry)
8. Run 45 min at 160F
9. Sample: make add if necessary
10. Sample dyebath for analysis
11. Pump dyebath to holding tank
12. Add 160 gal of fresh water (to 200 gal on sight glass).
13. Raise to 110F
14. Add finish chemical (plus 3 gal water)
15. Run 10 min
16. Drain softener bath
17. Unload goods
18. Return to Step 1

Table VIII—Production Cost Factors for Adams-Millis (1978)

	Cost
Water/Sewer (¢/1000 gal)*	50
Energy	
¢/lb Steam	0.375
¢/1000 BTU	0.326
Auxiliaries	
RE-1824 (¢/oz)	3.75
LT-7.5 (¢/oz)	2.41
P-35 (¢/oz)	2.16
Pomosoft (¢/oz)	1.38
Dyes	
Red (¢/g)	0.672
Yellow (¢/g)	0.637
Blue (¢/g)	0.807

*A quantitative cost/gallon for water/sewer could not be determined for Adams-Millis, as both well water and city water were being utilized, and a total water usage for a given time period was unknown. Therefore a representative combined water/sewer cost for the Southeast of $0.50/1000 gal was used in the calculations.

stration into shorter sequences. First, a 17-cycle reuse sequence that included the prescour was scheduled. The 10% (owf) addition of RE-1824 to the prescour bath was eliminated. To complete the study, a separate 14-cycle reuse sequence that did not include the prescour was scheduled.

Dyebath Reuse Sequences

To clarify further the formulation changes necessitated by going back to the original auxiliary concentration levels (Table IV), a preliminary five-cycle reuse sequence was conducted that incorporated all five of the shades being used. The reuse dyeing procedure, detailed in Table VI, was the same as that used subsequently in the 17-cycle reuse sequence. The process included prescouring of each bath of hosiery in the residual finish bath from the previous cycle, and thus paralleled the procedure utilized for the pilot scale research. Based on the experimental evidence from the preliminary sequences, the researchers adjusted the shades and altered the relevant computer programs in preparation for the multicycle reuse sequences.

In the 17-cycle reuse sequence with prescour, the plant dyer elected not to drain the hot dyebath from the holding tank directly onto the wet hosiery for fear of problems with leveling. The wet hose were removed from the machine after prescour, and were reloaded following dilution and repienishment of the dyebath. The fixed quantity necessary to repienish each reused dyebath was calculated to be 33% of the auxiliaries required by the 1978 conventional cycle. The 33% figure was based solely on the volume of water lost during the process, with exhaustion to the fiber considered to be neglible.

To simplify the reuse process and based on the pH experiments, a 14-cycle reuse sequence was conducted in which no prescour was utilized. The revised process is detailed in Table VII. By eliminating the prescour step, the necessity of removing wet hose before metering in the reused bath was eliminated, and the entire process more closely correlated with the optimized 1978 conventional procedure (Table II). As with the 17-cycle reuse sequence, the auxiliaries were added in smaller quantities to the reused baths (40% of

Table IX—Shade Sequences Followed

1976 Conventional				1978 Optimized			17-Cycle Reuse				14-Cycle Reuse			
Project Run	Run In Sequence	Nylon Type	Shade Code	Project Run	Nylon Type	Shade Code	Project Run	Run In Sequence	Nylon Type	Shade Code	Project Run	Run In Sequence	Nylon Type	Shade Code
52	1	66	STA	1	6	SUN	21	1	66	LBE	38	1	6	SUN
53	2	66	LBE	2	6	SUN	22R	2	66	STA	39R	2	6	BRM
				3	66	STA	23R	3	6	SUN	40R	3	66	LBE
				4	66	STA	24R	4	6	BRM	41R	4	66	STA
				5	6	BRM	25R	5	66	COF	42R	5	66	LBE
				6	66	LBE	26R	6	66	LBE	43R	6	66	STA
				7	66	LBE	27R	7	6	SUN	44R	7	6	SUN
				8	6	BRM	28R	8	66	LBE	45R	8	6	BRM
				9	6	BRM	29R	9	6	SUN	46R	9	66	LBE
				10	6	BRM	30R	10	6	BRM	47R	10	66	STA
				11	6	SUN	31R	11	66	LBE	48R	11	6	SUN
				12	6	BRM	32R	12	66	STA	49R	12	6	BRM
				13	66	STA	33R	13	6	SUN	50R	13	66	LBE
				14	66	LBE	34R	14	6	BRM	51R	14	66	STA
				15	6	SUN	35R	15	66	STA				
							36R	16	66	LBE				
							37R	17	66	STA				

Table X—Consumption Data and Energy/Material Costs for Conventional Process as Utilized in 1976 (2-Cycle Sequence)

	Energy/Material Consumption	Energy/Material Cost ($)
Load, lb	96.0	
Steam		
Lb.	338	
BTU × 10^6	3.89	1.26
Water/Sewer (gal)	580	
Auxiliaries		0.290
RE-1824 (oz)	16	
LT-7.5 (oz)	16	0.600
P-35 (oz)	8	0.386
Pomosoft (oz)	32	0.173
Dyes		0.442
Red (g)	42.1	
Yellow (g)	86.4	0.293
Blue (g)	48.5	0.550
Adds (no.)	1.0	0.391
Elapsed Time (min/run)	157	
Total Cost/Run		4.380

Table XI—Average Consumption Data and Energy/Material Costs For Optimized Process as Utilized in 1978 For 15-Cycle Sequence

	Energy/Material Consumption	Energy/Material Cost ($)
Load, lb	68.8	
Steam		
Lb.	193.8	
BTU × 10^6	2.23	0.727
Water/Sewer (gal)	363	
Auxiliaries		0.181
RE-1824 (oz)	20.9	
LT-7.5 (oz)	14.8	0.785
P-35 (oz)	7.2	0.357
Pomosoft (oz)	60.8	0.155
Dyes		0.637
Red (g)	54.3	
Yellow (g)	111.1	0.365
Blue (g)	69.0	0.707
Adds (no.)	0.7	0.557
Elapsed Time (min/run)	114	
Total Cost/Run		4.672

Table XII—Average Consumption Data and Energy/Material Cost for 17-Cycle Reuse Sequence with Prescour

	Energy/Material Consumption	Energy/Material Cost ($)
Load, lb	91.1	
Steam		
Lb.	87.2	
BTU × 10^6	100	0.327
Water/Sewer (gal)	205	
Auxiliaries		0.103
RE-1824 (oz)	7.2	
LT-7.5 (oz)	6.6	0.270
P-35 (oz)	3.3	0.160
Pomosoft (oz)	51.8	0.071
Dyes		0.715
Red (g)	43.9	
Yellow (g)	95.2	0.295
Blue (g)	55.3	0.606
Adds (no.)	0.4	0.447
Elapsed Time (min/run)	111	
Total Cost/Run		2.993

original weight) than in the conventio cycle.

Economic Analyses

Production cost factors (Table V for Adams-Millis were supplied by company's accounting department. T cost factors were used verbatim in subsequent cost/benefit analyses the project.

Results And Discussion

The shade sequences dyed by t various procedures are detailed in Tab IX. LBE was a light brown shade c nylon 66; SUN and STA were mediu brown shades on nylon 6 and 66, re spectively; and BRM and COF wer dark brown shades on nylon 6 and 6 respectively.

Two runs based on the 1976 conver tional process (Table I procedure) wer conducted and the consumption mon tored. The consumption and cost dat are compiled in Table X. The FMC color difference between the samp dyed to the STA shade and the plan standard was 7.0 MacAdam units (3).

Fifteen optimized runs were the conducted by Adams-Millis in the man ner detailed in Table II using the sam techniques as the other machines in th plant. The consumption and cost dat for the runs are shown in Table XI. Th compilation was totaled and average representing a set of typical plant runs in which the dyer was allowed to patter the shade sequence as dictated by th master plant production schedule. Ex haustion, determined by the dyepath reuse analysis scheme, ranged from 88% to 96% for the three dyes in the optimized process. FMC II color differences for the 15 dyed samples averaged 4.1 MacAdam units from the standards, with Run 6 of Table IX registering a high of 8.9 units. Correspondingly, this was the only batch in the project returned to the dyehouse as offshade.

Since the five-cycle reuse sequence was involved only with reformulating the dyes to compensate for the reversion to the earlier auxiliary levels (Table IV), none of its data are presented. The average consumption and cost data for the 17-cycle reuse sequence with prescour (Table VI procedure) are given in Table XII. The average FMC II color difference between the 15 dyes samples and plant standards was 4.5 MacAdam units. All batches were concluded to be first quality by the Adams-Millis quality control section.

A slight (5-7%) decrease in exhaustion occurred during the first four to six cycles (Table XIII). After the initial drop in exhaustion, the impurity concentration reached a steady state as predicted for systems in which a small

Table XIII—Exhaustion in the 17-Cycle and 14-Cycle Dyebath Reuse Sequences

Sequence Type	Project Run No.	Run In Sequence (No.)	Nylon Type	Shade	Exhaustion to Fiber: Red (%)	Yellow (%)	Blue (%)
17-Cycle Sequence	21	1	66	LBE	92	95	90
	22R	2	66	STA	92	95	90
	23R	3	6	SUN	90	94	85
	24R	4	6	BRM	88	92	85
	25R	5	66	COF	85	90	83
	26R	6	6	LBE	87	92	82
	27R	7	6	SUN	89	93	83
	28R	8	66	LBE	89	93	85
	29R	9	6	SUN	87	93	86
	30R	10	6	BRM	86	91	84
	31R	11	66	LBE	89	94	87
	32R	12	66	STA	88	91	85
	33R	13	6	SUN	86	91	80
	34R	14	6	BRM	81	85	77
	35R	15	66	STA	83	88	79
	36R	16	66	LBE	83	90	78
	37R	17	66	STA	92	95	90
				Average Exhaustion:	87	92	84
14-Cycle Sequence	38	1	6	SUN	93	95	89
	39R	2	6	BRM	88	92	85
	40R	3	66	LBE	89	93	87
	41R	4	66	STA	89	93	87
	42R	5	66	LBE	87	91	85
	43R	6	66	STA	86	93	86
	44R	7	6	SUN	87	92	84
	45R	8	6	BRM	87	91	84
	46R	9	66	LBE	82	89	78
	47R	10	66	STA	87	92	86
	48R	11	6	SUN	87	91	83
	49R	12	6	BRM	87	91	84
	50R	13	66	LBE	88	93	85
	51R	14	66	STA	89	94	87
				Average Exhaustion:	88	92	85

amount of fresh water is added each cycle (7). Significantly, the exhaustion for Run 36R (seventeenth cycle of the reuse sequence) was the same as for Run 21, the conventional cycle that began the sequence.

The average consumption and cost data for the overall 14-cycle reuse sequence without prescour are contained in Table XIV. In line with the developed theory, the 14-cycle reuse sequence without prescour did not present either dyeing or analysis problems due to a buildup in impurities (7). The dye exhaustion figures for the sequence (Table XIII) confirmed the same behavior as had been observed in the 17-cycle reuse sequence; i.e., the exhaustion decreased slightly during the first four to six cycles, after which it remained relatively constant. The exhaustion figures for the STA shade on Run 51R, the fourteenth and last cycle in the sequence, were almost identical with those determined for the STA shade of Run 41R, the fourth cycle in the sequence.

The results confirmed that the prescour step of the 17-cycle reuse sequence had little influence on the number of cycles that could be dyed from the same bath. Indeed, the excellent extraction behavior in the analyses and the low number of required adds dictated that the dyebath of the 14-cycle reuse sequence could have been utilized indefinitely as long as a small volume of fresh water was required for each run (7). The average color difference between the dyed samples of the 14-cycle reuse sequence and plant standards was 5.0 MacAdam units, again within the color tolerance range allowed by the Adams-Millis quality control section.

From the average consumption figures for the various processes, a percentage savings in energy and materials can be calculated. Table XV details the percentage savings. The 1978 optimized process and the two reuse sequences are

Table XIV—Average Consumption Data and Energy/Materials Cost for 14-Cycle Reuse Sequence Without Prescour

	Energy/Material Consumption	Energy/Material Cost ($)
Load, lb	90.9	
Steam		
Lb.	83.7	0.314
BTU × 10^6	0.96	
Water/Sewer (gal)	216	0.108
Auxiliaries		
RE-1824 (oz)	7.1	0.267
LT-7.5 (oz)	6.4	0.154
P-35 (oz)	3.2	0.070
Pomosoft (oz)	52.6	0.726
Dyes		
Red (g)	44.1	0.297
Yellow (g)	95.1	0.606
Blue (g)	54.1	0.437
Adds (no.)	0.4	
Elapsed Time (min/run)	106	
		2.979

Table XV—Percentage Savings For Sequence Complications

	Energy (%)	Water/Sewer (%)	Auxiliaries (%)	Dyes (%)	Add (%)	Time (%)
Savings over 1976 Conventional Sequence						
1978 Optimized Sequence	43	37	—	—	—	27
17-Cycle Reuse Sequence	74	65	—	—	—	29
14 Cycle Reuse Sequence	75	63	—	—	—	32
Savings over 1978 Optimized Sequence						
17-Cycle Reuse	55	44	34	17	43	3
14-Cycle Reuse	57	40	33	18	43	7
Average Savings	56	42	34	18	43	5

Table XVI—Savings by Shade on Incorporation of Dyebath Reuse to 1978 Optimized Process

Shade	Nylon Type	Savings					
		Energy (%)	Water/Sewer (%)	Auxiliaries (%)	Dyes (%)	Adds (%)	Time (%)
LBE	66	65	40	41	26	85	12
STA	66	59	44	53	13	7	4
SUN	6	45	38	15	2	50	0
BRM	6	64	45	18	2	63	21
	Totals:	233	167	127	43	205	29
	Plant Average:	58	42	32	11	51	7

compared to the 1976 conventional process. As only two runs were conducted on the latter (Table IX), a compilation of auxiliary, dye and add savings was not justified. Since the bath volumes, dyeing machine, steam control, etc. were the same for all of the runs, comparisons of energy, water/sewer and time requirements were considered valid. As in all the compilations, the data include consumption during the finishing step, which was the same regardless of the dyeing process used.

Compared to the 1976 process, the 1978 optimized process demonstrated substantial savings even without reuse incorporation. Energy savings (43%) and water savings (37%) constituted substantial reduction in requirements and illustrated the waste that can be eliminated from typical textile dyeing processes by simply applying sound engineering and textile chemistry principles. From an economic viewpoint, the time savings were also significant, as they allowed the plant to complete four cycles per shift per machine instead of the three cycles maximum with the 1978 conventional process. Rows 2 and 3 of Table XV detail the overall savings accomplished by the project: i.e., by optimization coupled with dyebath reuse.

The lower half of Table XV relates the savings achievable beyond process optimization on incorporation of dyebath reuse. The savings of both reuse sequences were similar, with the energy consumption being reduced an additional 45% beyond optimization. The water/sewer savings (42%) were also impressive, as were the savings in auxiliary chemicals (34%). Due to the high exhaustion, dye savings (18%) were lower but still above those determined in the earlier pilot plant studies. Although the shade sequences were not identical in Table IX, sufficiently long sequences were run to justify comparison of the dye and auxiliary chemical consumptions on a percentage basis. The decrease (43%) in adds was due more to controlled liquor ratio and fabric/reagent weighing than to dyebath reuse, but did demonstrate that reuse incorporation did not adversely affect the add rate.

An overall compilation of savings by shade was also derived. This compilation avoided the discrepancies caused by altered shade sequences in the various process sequences. The data are shown in Table XVI. The nylon 6 shades had significantly lower percentage savings in auxiliary chemicals than the nylon 66 shades. The discrepancy was directly related to the fact that the data were compiled for the entire dyeing softening cycle, not just the coloration step. The dyer used two pounds of the softening material in the finishing bath for the nylon 66 shades. However, five pounds of softener was used for the nylon 6 shades, thus skewing the chemical savings data. The dyer stated that the nylon 6 style was harsher in feel than the nylon 66 style, and thus required a heavier concentration of soft-

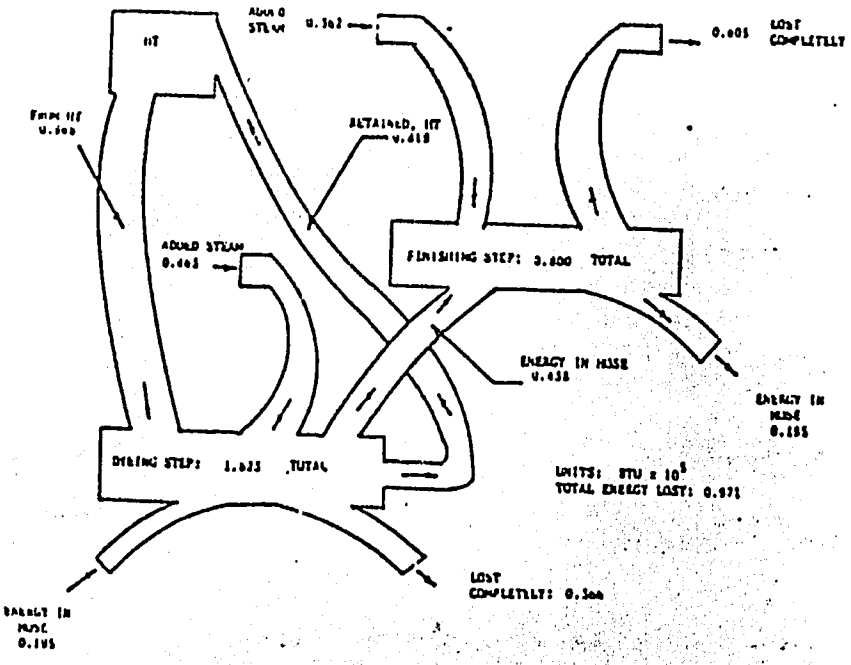

Fig. 2. Energy balance and flow for in-sequence run of LBE shade on nylon 66 during 17-cycle reuse.

Table XVII—Cost Data For Various Processes

Process	Total Runs	Load Average (lb)	Cost: Steam ($)*	Water/Sewer ($)*	Auxiliaries ($)*	Dyes ($)*	Total ($)	Cost Weight (¢/lb)
1978 Optimized Process	15	88.8	0.727 (15.6%)	0.181 (3.9%)	2.135 (45.7%)	1.629 (34.9%)	4.672	5.26
17-Cycle Reuse w/Prescour	17	91.1	0.327 (10.9%)	0.103 (3.4%)	1.216 (40.6%)	1.348 (45.0%)	2.994	3.29
14-Cycle Reuse w/o Prescour	14	90.9	0.317 (10.5%)	0.108 (3.5%)	1.217 (3.6%)	1.340 (45.0%)	2.979	3.28

*The percentages in parentheses represent the contribution by item to the total average cost per run.

ener. Closer interrogation revealed that the softener levels had been derived in an unstatistical fashion, specifically by an empirical "rub test" of harshness performed by the dyer on her forearm. Further research involving consumer wear tests to determine optimum softness will be needed to determine the appropriate amount of softener required (6).

To assess the energy flow during the reuse sequences, energy balances were scaled in modified Sankey diagrams. The major assumptions made in computing the energy balances were: (1) the hosiery retained exactly the same water volumes per batch as detailed in Table III, and (2) the temperature of the water remaining in the hosiery after the dyeing and softening steps was 160F and 110F, respectively. All other necessary data were measured. Examples of the balances are shown in Figs. 2 and 3 for the LBE shade on nylon 6.

Surprisingly, the average energy consumed in the 17-cycle reuse sequence was similar to that measured for the 14-cycle reuse sequence by the shade analysis. With the energy recovered from the finish bath via the 110F prescour water held in the hosiery of the 17-cycle sequence, it should intuitively be more energy efficient than the 14-cycle reuse sequence without the prescour step. The discrepancy was possibly due to the inaccuracy of the two stated assumptions, although the true cause was not apparent from the trial data.

Table XVIII—Combined Cost Savings in Energy and Materials by Shade

Shade	Nylon Type	Savings (¢/lb): 1978 Optimized Process	17-Cycle Reuse	14-Cycle Reuse
LBE	66	4.36	2.33	2.28
STA	66	4.73	2.60	2.64
SUN	6	4.68	3.32	3.79
BRM	6	6.70	5.34	5.29
	Totals:	20.47	13.59	14.00
	Average:	5.12	3.40	3.50

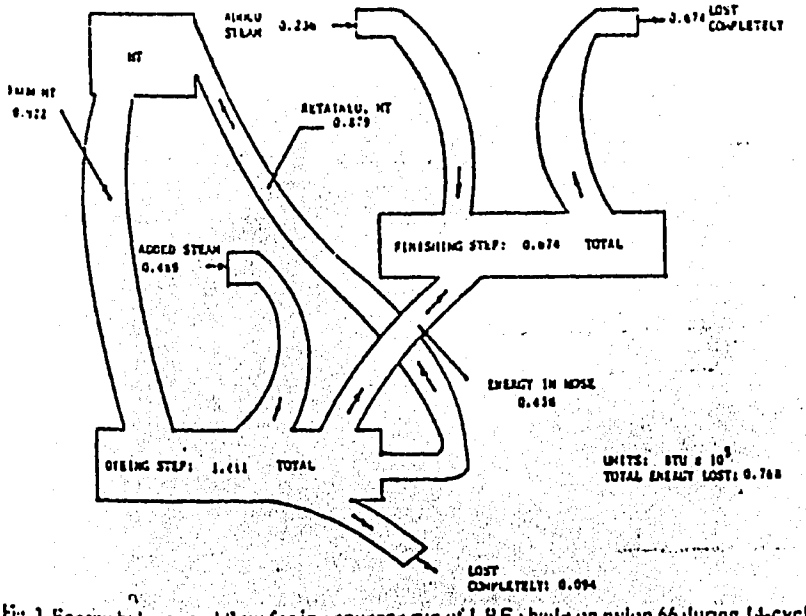

Fig. 3. Energy balance and flow for in-sequence run of LBE shade on nylon 66 during 14-cycle reuse.

In Table XVII, the average energy/material costs by process are repeated, with the percentages contributed toward the total finishing cost per weight of goods given for each component. The reuse sequence with and without prescour were almost identical in cost, and both were about 0.2¢/lb cheaper than the 1978 optimized process. Although percentage savings in energy and water/sewer requirements were impressive (Tables XV and XVI), their contributions to the total average cost per run were minimal. The largest single cost savings on reuse incorporation was due to the value of the reused auxiliary chemicals (about 0.9¢/lb), reflecting the artificially low cost of energy in the U.S. and cheap water/sewer prices.

An economic analysis by shade revealed that the combined cost savings from the two nylon 66 shades averaged 2.1¢/lb, while the nylon 6 savings were lower at 1.3¢/lb (Table XVIII). The reasons were discussed earlier for the consumption data: i.e., the longer LR and the 250% higher mass of softener chemical for the nylon 6 runs.

Summary

Dyebath reuse has been demonstrated on commercial equipment to be a feasible process for reducing energy, water/sewer, chemical and dye requirements in the disperse dyeing of nylon hosiery while yielding first quality goods. Adams-Millis has continued to

use the reuse engineering/analytical system since the completion of the study project, and the dyer has reported coloration of up to 41 batches of pantyhose from the same bath. The plant is consistently dyeing 30 batches of material in reuse sequences.

Based on the results of the demonstration, Adams-Millis plans to convert six 100-lb hosiery machines to dyebath reuse. Since the cost and consumption factors were similar for the two reuse sequences, the simplicity factor (fewer unloadings of wet hosiery) dictated that the reuse procedure without prescour (Table VIII) was the company's choice for the long term implementation. The plant scheduling is such that two machines can be operated from a single holding tank, and thus three insulated holding tank/pumping systems must be constructed to incorporate dyebath reuse on the six machines.

The estimated total cost for converting the machines to reuse systems and to purchase the necessary analytical equipment is $28,441. Based on the demonstration results, dyebath reuse will save about 0.2¢/lb of the plant's wet processing costs over the optimized 1978 process. The plant expects to process 612,000 pounds of goods per year on the six machines adapted to reuse. Thus yearly savings will be $12,240.

Not even taking into account the tax benefits (depreciation) of the equipment, or the fact that it is expected to operate virtually maintenance free its first three years, the initial raw capital investment should be recovered years.

Several unique factors lengthe payoff. First, the p[illegible]r operates one 8-hour shift per [illegible] and thu utilization of the syst[illegible] produ capability will not be reali[illegible] Se by the nature of the analysis sch each batch of goods dyed by the sequence requires an analysis re less of the batch size. Thus a 100-p hosiery dyeing requires the [illegible] analysis and analytical equipmen for example, an 1800 pound carpet ing.

An in-plant reuse demonstr project on acid dyeing of nylon c also funded by the U.S. Departme Energy, is currently underway (7). return on raw capital investmen carpet implementation is projected only seven months, based on pilot results (7).

Acknowledgements

The authors gratefully acknowl the overwhelming support extend the project by the managemen Adams-Millis Corp. Special recogn is due John Wallner, vice-preside operations; Walter Von Cannon, manager; Max Moore, plant dyer; Ed Markushewski, plant engineer

The research was funded by Department of Energy Contract EY-76-S-05-5099, for which the in tigators are grateful. The authors cially acknowledge the valuable ance and support of John Rossme DOE technical monitor, and also Al Stren and Doug Harvey of DOI their administrative roles in the pro

References

(1) Cook, F. L., et al., *Energy Conserve the Textile Industry, Phase II Report* U S partment of Energy Contract No. EY-76-S-05 Georgia Institute of Technology, Atlanta, Ga. 1979.

(2) Tincher, W. C., *American Dyestuff Rep* Vol. 66, No. 5, 1977, p36.

(3) Cook, F. L. and W. C. Tincher, *T Chemist and Colorist*, Vol. 10, No. 1, January p21.

(4) Cook, F. L. and W. C. Tincher, "Dyeba Auxiliary Reuse for Energy and Mass Con tion," Chapter in *Energy Conservation in the duction and Use of Textile Fibers*, Sympo Book Series, American Chemical Societ press).

(5) Cook, F. L., et al., *In-Plant Demonstra Dyebath Reuse Applied to Hosiery Dyeing Report, Part I, Phase III*, Extension of the Department of Energy Contract No. EY-76 5099, Georgia Institute of Technology, At Ga., April 1979.

(6) Cook, F. L. and P. Crenshaw, School o tile Engineering, Georgia Institute of Techno Atlanta, Ga., unpublished results, August 19

(7) Tincher, W. C., et al., *In-Plant Demon tion of Optimization of Energy Utilization in Dyeing of Carpet*, Proposal Funded as Par Phase II, Extension of U.S. Department of E Contract No. EY-76-S-05-5099, Georgia Instit Technology, Atlanta, Ga., July 1979.

Energy Book

for your employees!

The Alliance to Save Energy believes every American should know the facts about our energy situation. So it has produced a 40-page book, "The Energy Puzzle," that tells what we can do to help ourselves—and our country—straighten out the energy mess.

Compelling articles on conservation explain how to save energy, and money, now—on the job and at home. You will learn how coal, solar heating, windpower and other reserve sources fit into the energy puzzle.

It is crucial that America act now to stretch its resources. You, and everyone who works for you, should have a copy of "The Energy Puzzle." For information on how to get bulk copies, write The Alliance to Save Energy.

ALLIANCE TO SAVE ENERGY
Box 57200, Washington, D.C. 20036

I want to help save energy. Send me your book.

Name

Address

City State Zip

A public service message from this magazine and the Advertising Council