APPENDIX TO
APPLICATIONS REVIEW/CONCEPTUAL DESIGN
FOR FIELD TEST #8
PV-POWERED DESALINATION PLANT
AT EL KASR

MARCH 1987

FINAL

Prepared for:

Egyptian Electricity Authority
Cairo, Egypt

U.S. Agency for International Development
USAID Mission: Cairo, Egypt

Submitted to:
Louis Berger International, Inc.
East Orange, NJ
(Contract AID 263-0123C-00-4069-00)
(Meridian Task No. MC-173-380)

Prepared by:

Meridian Corporation
Falls Church, VA 22041

APPENDICES

Appendix A. Available Ground Water Quality Analyses for El Kasr Extension #3 Wells.....

Appendix B. Eastern Mediterranean Water Quality Analysis.....

Appendix C. Comments and Direction Received by Meridian Resulting from EEA/USAID Review of the Draft-for-Comment AR/CD FT #8.....

Appendix D. Trip Reports Resulting from Site Visit to Mersa Matruh and El Kasr, Mr. James Hoelscher and Mr. Bruce Watson.....

Appendix E. Report on Conceptual Design for Field Test Site #8 - Photovoltaic Brackish Desalination System, May 26, 1986.....

Appendix F. Field Test #8 at El Kasr Reverse Osmosis Redesign, February 23, 1987.....

Appendix G. Derivation of Array Power Formula.....

Appendix H. PV F-Chart Printouts.....

APPENDIX A

AVAILABLE GROUND WATER QUALITY ANALYSES

FOR EL KASR EXTENSION #3 WELLS

DATES OF SAMPLES

Ground Water Constituents		11/15/85	3/19/86	4/24/86	6/29/86	9/1/86	9/8/86	9/23/86
PH		7.6	7.8	7.8	8.6	7.6	7.4	7.2
Conductivity U - mhos/Cm2		10,900	13,000	15,000	920	630	20,000	20,000
Partial alkalinity	mg/l $CaCo_3$	0	0	0	17.5	0	0	0
Total alkalinity	mg/l $CaCo_3$	250	300	270	203	180	270	260
Total Hardness	mg/l $CaCo_3$	1,620	1,300	2,000	80	172	2,240	2,090
Calcium	mg/l $CaCo_3$	420	490	600	50	98	250	640
Manganese	mg/l $CaCo_3$	1,200	1,410	1,400	30	47	1,620	1,450
Sodium	mg/l $CaCo_3$	4,130	5,220	5,087	313	94	5,037	5,900
Potassium	mg/l $CaCo_3$	115	155	162	11.5	6	175	173
Manganese	mg/l as Mn			0	.03	.01	.02	.01
Iron	mg/l as Fe		.024	0.1	.45	.013	.006	.01
Chlorides	mg/l as $CaCo_3$	5,052	6,052	5,706	126	53	6,340	6,250
Sulphates	mg/l as $CaCo_3$	877	948	1,317	67	42	1,636	1,661
Total Dissolved Solid (TDS) mg/l		6,540	6,380	10,093	737	359	13,397	12,840
Turbidity (NTU)					84	1.2	2.8	2.2
Suspended Solids	mg/l		60		157	5	7	5

APPENDIX B

EASTERN MEDITERRANEAN WATER QUALITY ANALYSIS

Ionic Composition in Seawater (in mg/l)

Constituent	Normal Seawater	Eastern Mediterranean
Chloride (Cl^{-1})	18,980	21,200
Sodium (Na^{+1})	10,556	11,800
Sulfate (SO_4^{-2})	2,649	2,950
Magnesium (Mg^{+2})	1,272	1,403
Calcium (Ca^{+2})	400	423
Potassium (K^{+1})	380	463
Bicarbonate (HCO_3^{-1})	140	--
Strontium (Sr^{-2})	13	--
Bromide (Br^{-1})	65	155
Boric Acid (H_3BO_3)	26	72
Fluoride (F^{-1})	1	--
Silicon (Si^{-4})	--	--
Iodine (I^{-1})	<1	2
Other	1	--
Total Dissolved Solids	34,483	38,600

- Note: -- Means much less than 1 mg/l or not given.
- Assume pH 7.9, 26.4°C.

Reference: The USAID Desalination Manual, August 1980, pg. 2-5. (PN-AAJ-122).

APPENDIX C

LETTERS

APPENDIX C

Comments and Direction Received by Meridian Resulting From EEA/USAID Review of the Draft-For-Comment AR/CD FT#8

- Letter from USAID to the Project Manager Team, Subject: Review of AR/CD Field Test #8, dated July 14, 1986
- Memorandum from DR. Tablawi/R. Botros concerning EEA/EHTDO Comments on AR/CD for FT#8, dated August 14, 1986
- Memorandum signed by R. Botros and J. Hoelscher concerning Comments on AR/CD for FT#8, dated August 25, 1986
- Letter from Meridian to Robert Spongberg, LBII/Cairo, Subject: Approval of Conceptual Design for Field Test #7, #8, #9, and #10 Under Contract AID 263-0123C-00-4069-00 (Meridian Project No. 173), dated November 12, 1986 (MCC-429-86-TA)
- Letter from Robert Spongberg to Meridian, Subject: Result of Discussions Regarding AR/CD-7 and AR/CD-8 In Response to MC Letter #429-86-TA DAted 12 November 1986, dated December 10, 1986

DATE: July 14, 1986

REPLY TO ATTN OF: HRDC/S&T:Eric A. Peterson EAP

SUBJECT: Review of AR/CD Field Test #8

14 OCT 1986

14 OCT 1986

TO: Project Management Team
See Distribution

Comments:

1) Graphical presentations are required to illustrate the differences in output as a function of insolation and salinity of feedwater. I suggest a separate graph of OR and ED output versus isolations with a family of curves for salinity.

2) What was the variation in isolation (2.6 Kwh/m^2 to 7.6 Kwh/m^2) effect on chossing system size of 15 m^3 of water?

3) Does demand vary by season?

4) Equipment for assessing source water quality needs to be specified.

5) Exhibit 4-1, page 27, answer to "tolerance to change in power supply" may be better answered with "high" rather than "yes". Does "yes" mean it continues to operate but at reduced flow or reduced quality?

6) Is EEA aware of other data sources? Did Meridian check for other data during site visit? One data point cannot be the basis for conceptual design unless a sensitivity analysis is given. See comment No. (1).

7) Discussion and analysis of two types of disposal (evaporation versus ocean disposal) are required. Evaporation would require a lined pond. Disposal will require long lines to beach or further.

8) Discussion and analysis of diesel generation set is inadequate. What is genset impact on output when running in parallel with PV or at other times? Why use batteries when there is a genset?

9) What is the solar insolation data given on page 33? Is the December number a minimum while the June is a maximum? Are these theoretical or actual data?

10) The justification for batteries is inadequate on page 34.

Copied to Ford/Bryo by 16/10/86 Pouch

OPTIONAL FORM NO. 10
(REV. 1-80)
GSA FPMR (41 CFR) 101-11.6
5010-114

★U.S. GOVERNMENT PRINTING OFFICE : 1982 0 - 361-526 (7290)

11) AR/CD lacks instrumentation.

12) AR/CD lacks a summary of conclusion and recommendation of desalinization type and PV type.

13) AR/CD lacks information on institutional arrangements of what EEA should be negotiated with Governorate. EEA needs to meet with AID staff about the private operation agreement being considered by Matruh Government.

14) AR/CD needs information on O&M requirements.

Distribution:

Dr. Emad El Sharkawi, Chairman, EEA
Dr. Moustafa Swedan, Deputy Chairman, EEA
Dr. Talaat El Tablawi, EEA
Eng. Reda Botrous, EEA ✓
Mr. Robert Spongber, LB II

Peter Borgo, MC.

August 14, 1986

TO: R. Spongberg

TO: Tom West

CC: Deeepak Kenkeremath
Pete Borgo
Jim Hoelscher

From: D. Tabbawi T. El Tobbawi

FROM: R. Botros R. Botros

KEA/EREDO Comments
on
AR/CD for FT #8

Copied to Ford/Borgo, DK/Hoelscher Ay 10/10/86 Pouch 10/13/86

- o Site visit report should be included in the AR document (including data of visit, institutional arrangements, required staffing for O&M, contact person, site data, site information, etc. and additional information needed that help design. + Conclusions and final recommendations.)

- o Develop a site check list.

- o Define energy resources, and the nearest electric line.

- o Define user requirements, that will help in hardware identification and possible size of the PV/Des. unit.

- o Identify effect of seasonal salinity on the product water to meet user requirements and its effect on the design and size of the PV/Des. unit. Family of curves should be made showing performance specification correlation charts.

- o For each salinity level, the type of des. technology must be addressed showing the reason of selection.

- o Diesel operation scheme should be addressed for winter and summer operation.

- o AC vs. DC design should be given showing advantages and disadvantage and reasons of selection.

- o Evaluate desalination alternatives showing reason of selection.

- o Are the given parameters reflect user requirement?

- o P. 13, Item 5.4, Titled Batteries: it was stated that sealed batteries are always preffered over vented ones in remote applications and sandy areas. This is not necessarily true in hot climates, i.e., electrolyte rise in temp., probably gas formation and boiling may damage the plates. Vented batteries would prevent this problem accordingly evaluating the two alternatives and select one. However, vented can be equipped by recombination caps, thus reducing electrolyte loss.

- o Final site selection should be identified reflecting technical consideration for selection.

- o Recommendation is given to move the unit inland 200 meters, reasons of moving should be clarified showing its effect on the sizing of unit, piping protection, treatment needed to overcome deposite and scaling problems.

- Eric comment shout be taken into consideration

- Lay out of the system should be part of the report showing place of all components on site.

- Schematic diagram and block diagram for system components, showing their connections should be given.

- The final decision of transporting brine water should be identified, feed water connection to the des. unit should be clarified.

- No information given regarding way of installing system in the selected site.

- Instrumentation requirements are not included, what needs to be measured for easy evaluation.

- Modes of operation should be explained & addressed in the AR report (with curves) according to item 5.1.3 page 33.
- Correct dec. insolation data, two different figures are given (p. 33, p. 43) and recalulate design according to the correct insolation figure.

- It is stated, page 33, no. 4, that the unit will be sized for 8 hr. operation, at what extent this can affect R/O membranes life time, maintenance... etc. (for membranes safety it should operate 24 hrs under constant pressure, this required additional battery storage, consequently additional array sizing... evaluation should be made).

- Insolation data given by M. Shaltout p. 33, is a theoretical data, av. should be the reasonable value for the insolation.

- Options of RO/ED with/without battery storage for 3/day taking into consideration a 2/3 day storage tank.

- Cost analysis should be part of the AR/CD document.
- Three options should be taken into consideration :

  1- Product water to be 25 -- 30 m^3/d. using PV & diesel back up. with batt. storage.

  2- PV/Diesel hybrid (8 operating hrs for PV — 16 hrs by diesel) with batt. storage. (one day)

  3- PV/diesel hybrid. without batt storage (using storage tank.)

During her visit to the Meridian Corporation during August 1986, Engr. Reda Botros discussed in detail the Application Review/Conceptual Design for Field Test #8. Comments concerning this document are summarized in the following pages. These comments supplement those contained in a letter from Eric Peterson to "Project Management Team" dated July 14, 1986, (Subject: Review of AR/CD Field Test #8) which was given to us by Engr. Botros.

Comments on AR/CD for FT #8

1. Trip Reports for the Site Visit should be included as part of the AR/CD. Specifically,

   o What skills and education should the person(s) who operate and maintain the desalination site have?

   o Who are the people in the Matruh governorate who we should talk to to get data, specific information about the site, etc.?

2. The distance to the nearest electric line should be specified for all three candidate sites.

3. User requirements should be specified.

4. The projected mode of operation of the diesel (how many hours operation per day, seasonal variation,) should be specified.

5. The justification for using sealed batteries should be re-examined. In hot climates, the temperature of the electrolyte in batteries may rise to unacceptably high temperatures because there is no venting. Equipping a vented battery with recombination caps may be a better alternative.

6. The site selection of El Kasr #3 should be justified on a technical basis.

7. There is a recommendation that the building site at El Kasr #3 be moved from the vincinity of the Roman wells to about 200 meters inland. One disadvantage of this is that there must be a feedwater pipeline installed to get the water from the source to the site of the desalination plant. This pipeline will be subject to scaling and corrosion. How to combat these problems should be addressed in the AR/CD. Also the effect of, corrosion and array sizing should be addressed.

8. Exhibit 5-11 (a sketch of the field layout) for both El Kasr Central and El Kasr #3 should be drawn to scale with more detail.

9. Exhibit 5-8 (Electrical Schematic) should be expanded and drawn in a similar style to that in Field Test #6 AR. "Single line diagram."

10. The disposal method for the brine should be reconsidered and a recommendation made based on cost for both El Kasr Central and El Kasr #3. If disposal to the sea is recommended, then the corrosion and scaling problem in a pipeline needs to be addressed.

11. The method of installing the system, such as access to the site with delivery vehicles, fences, and types of building construction should be addressed.

12. There is an inconsistency in the December insolation value on pages 33 and 43. This should be corrected and any resulting conceptual design calculations based on incorrect insolation should be changed.

13. Reverse osmosis desalination units work best when operating constantly. The recommendation as it now stands is to operate the units on a 8-hour basis. There should be a discussion on the effect of this. For instance, if the membranes are not kept wet, what is the effect? Does this involve any more maintenance? Will components wear out faster?

14. There should be options in the sensitivity analysis section showing the effect of 1, 2, and 3 days of battery storage. If there is excess energy produced, this energy should be used for other purposes.

15. The economic effect of running the diesel for an additional 16 hours per day should be calculated as an option.

OTHER ITEMS:

During our discussions with Engr. Botros, we discussed the need to get more and better feedwater analysis. Engr. Botros helped us to draft a TELEX to Egypt asking for data regarding periods of no water at El Kasr 3.

2. It is the opinion of Engr. Botros that if feedwater supply completely dries up at El Kasr #3 during the dry season, then the field test should not be located at El Kasr #3, but probably at El Kasr Central. MC should study alternatives and select the suitable site.

3. A sketch of the relative locations of El Kasr Extrension 3 and El Kasr Central (and surroundings) was furnished by Engr. Reda Botros.

4. There is a report (in Arabic) on the PV-powered desalination plant at the EEA High Tension Laboratory. The data in this report should be used as a comparison to FT #8. Meridian has been unsuccessful in getting a copy of this document. Engr. Botros will assist us in getting this document.

Engr. Reda Botros

R. Botros

3/25/1986

Va

James F. Hoelscher

James F. Hoelscher

8/25/86

MC

DEC 1 0 1986

RENEWABLE ENERGY FIELD TESTING PROJECT

(A.I.D. 263-0123.2)

TO: Deepak Kenkeremath, MC

From: Robert C. Spongberg, LBII

Through: Michael Ford, LBII

Date: 10 December 1986

Ref.: ARE 0652/86 C

Subject: Result of Discussions Regarding AR/CD-7 and AR/CD-8 In Response to MC Letter # 429-86-TA Dated 12 November 1986

Reference Meridian's letter # MC-429-86-TA dated 12 November 1986 requesting approval of Conceptual Designs for Field Tests. The following directions for FT-7 and FT-8 are an outgrowth of meetings held at AID with the EEA Task Leader and the Project Officer on 8 December 1986. A similar meeting will also be held to discuss the questions raised regarding FT-9 and FT-10.

Field Test # 7 - PV Lighting and Water-Pumping

In light of the USAID letter dated 24 November 1986 attached no further discussions were held regarding a centralized system for the village of Ries. Discussions are underway between EEA and AID on the possibilities of doing such a system under the New Initiatives Task.

A PV/Lighting-water pumping system will be developed for and installed in the village of El Ezz in the Baharyia Oasis and will consist of the following major sub-systems:

1. One water-pumping system with:

   a. PV-power source to provide sufficient water to flood-irrigate a 60 feddan area every other day plus a total of 10 cubic meters per day for domestic use.

b. A water source with a minimum of two new wells located at an elevation higher than and far enough from the existing wells to minimize drawdown.

c. Two inter-connected water storage components; one, to provide two hours of water supply for irrigating early in the day, prior to the PV-system becoming operational with sufficient piping and valving to transport and control flow of the water into the existing irrigation system; and, two, to provide up to a one-day supply of water for domestic use with piping to allow a central location of a single, manually-operated valve for extracting the domestic water.

2. In addition to the primary water-pumping system described the project will provide for an option of two portable PV water pumping units each capable of providing sufficient water to flood-irrigate one feddan per day from shallow wells, or irrigation ditch.

3. Twenty PV-power systems, each capable of providing an individual household with sufficient power to meet an energy demand of 1000 watt-hours/day. Each system will include: 2-20 watt and 2-40 watt florescent lights with fixtures; 4-220 vac electrical outlets; batteries; inverter; and sufficient wiring and hardware to allow for a light and outlet in each of four rooms. The Contractor will be required to install the systems, assure that each is operational, and demonstrate to the user that the systems can be used for appliances such as a television, refrigerator, small power tools, sewing machine and battery charger.

4. Ten individually PV-powered street lights to be located where required in and near the village of El Ezz.

Field Test # 8 - PV-Powered Desalination Plant

The PV-desalination system will be required to produce 25 cubic meters of water per day with a maximum of 500 ppm of salt using the reversed osmosis technology and having sufficient battery storage to assure that the r.o. unit is levelized. The system will also contain a storage tank capable of holding a one-day (25m3) supply of desalinated water and make provisions for a water source in addition to the Roman wells. The AR/CD should discuss clearly the following:

1. The advantages of R.O. vs E.D. technologies taking into consideration the two different water sources (i.e. Roman wells and Mediterranean Sea).

2. The quantities of feed water required, again considering the different sources.

3. The disposition of the salt residue depending on source.

cc.: Chrono
EO Office (for files)
IPH Technical File
MC Corres. Files

Talaat El Tablawi, EEA
Reda Botros, EEA
Rafik Georgy, EEA
Eric Peterson, USAID

Meridian Corporation

In Reply Refer to
MCC-429-86-TA
November 12, 1986

Mr. Robert Spongberg
Louis Berger International, Inc.
100 Halsted Street
P.O. Box 270
East Orange, NJ 07019

Subject: Approval of Conceptual Designs for Field Tests #7,#8,#9, and #10 Under Contract AID 263-0123C-00-4069-00 (Meridian Project No. 173)

Dear Bob:

During the visit to the United States by Dr. Bassyouni and Director General Botros this summer, discussions were held concerning the conceptual designs for the subject field tests. Meridian engineers worked closely with Dr. Bassyouni and DG Botros to redefine the field test requirements and to scope new conceptual designs in some cases. Agreement was reached on the general conceptual design specifications for each field test and we proceeded to begin detailed design activity until the stop work order was imposed on October 10, 1986.

Meridian EREFT engineers will soon be available to resume work on the AR/CD documents for the subject field tests. In light of the budget limitations that we are currently working under, Meridian believes that it is prudent to minimize any rework of these documents by obtaining official EEA/AID approval of the change in scope and redefinition of the conceptual designs before proceeding any further. Therefore, we request that you obtain concurrence from the proper authority on the conceptual designs described below. We need your response by 30 November, 1986.

o <u>AR/CD FT#10 -- Wind-Powered Desalination Plant</u>

Desalination plant - 80 m3/day fresh water output from a two-pass RO desalination plant. Sea water pumped from a 25m deep sea well. Total power requirement is 28 kW. A Pelton wheel energy recovery turbine is used to extract 6.7 kW from the first pass reject brine stream.

Wind energy system - Three 55 kW wind turbines with DC generators (or AC rectified to DC). 50 kWh of battery storage capacity. Excess power is fed to the Hurghada grid through a 100 kW inverter and isolation transformer. Back-up power is provided by the grid through a rectifier. The back-up power usage simulates a stand-alone diesel operation.

5113 Leesburg Pike • Suite 700 • Falls Church, Virginia 22041 • (703) 998-0922 • Telex 469248

o AR/CD FT#9 -- Small Village Wind Electric System

Load Demamd - 266 watts per residence for each of 17 residences for 19 hours per day. 2.25 kW of continuous power for a 7 m3/day RO desalination plant. The desalination requirement is new and not identified in the original statement-of-work. This results in an average continuous power requirement of 5.8 kilowatts or 140 kilowatt-hours/day.

Central Power System:

- Two 10 to 12 kilowatt rated power wind turbines
- One 20 kilowatt diesel generator
- A minimum of 25 to 30 kilowatt-hours of battery storage capacity
- A control system that limits the battery charge rate to approximately 4.5 kWh per hour.

Distributed Power System:

Cluster of Four Residences:

- Two 2.5 kW or one 5 kW rated power wind turbine
- One 5 kW diesel generator
- A minimum of 10 to 15 kWh of battery storage
- A control system that limits the battery charging rate to approximately 1.5 kwh per hour.

Single Residence:

- A single one kilowatt rated power wind turbine
- A 2.5 kilowatt diesel generator
- At least 5 kilowatt-hours of battery storage
- A control system that will limit the battery charging rate to less than 0.75 kWh per hour.

Stand-Alone Desalination Plant:

- Four 2.5 kilowatt or two 5 kilowatt turbines
- One 2.5 kilowatt diesel generator
- A minimum of 15 kWh of battery storage
- A control system that limits the battery charging rate to about 2.25 kWh per hour.

o AR/CD FT#8 -- PV-Powered Desalination Plant

Product water output will be 25-30 cubic meters per day. This is a change to the 10-20 cubic meters per day in the original SOW. Meridian has verbally been told that there is no problem with feedwater supply at El Kasr Ext. #3. Please confirm this; we will assume that this is correct unless the EEA tells us otherwise.

Revision of the AR/CD for FT#8 will follow the principles in the paper agreed to and signed by Director General Botros and Jim Hoelscher on August 25, 1986. The options that will be considered are as follows:

- Option 1. Use PV only (with unspecified number of days battery storage) to produce the entire output of product water. A diesel generator will be on site to be used in case of an emergency or unexpected need for more water. There will be no water storage tank.

- Option 2. Use PV (with one day of battery storage) and diesel as a hybrid power source. Design for 8 hours PV/battery operation with 16 hours of diesel operation. Use no water storage tank.

- Option 3. Use a PV/diesel hybrid power source without battery storage (using storage tank for product water).

Each of the above options will be analyzed using reverse osmosis and electrodialysis desalination technologies.

o AR/CD FT#7 -- PV Lighting and Water Pumping

The rated power for this field test will be approximately 50 kilowatts of PV. Two villages in the Bahariya Oasis will be served, Ries and El Ezz.

Ries (which has about 35 homes) will have a centralized system which will power a community center with enough power to support a light industry, such as grain grinding, with a maximum load demand of between 3 and 5 kilowatt-hours per day. In addition, the PV power source will supply 35 homes and pumps for irrigation.

El Ezz will have a decentralized PV system, i.e. individual PV systems for the community center, each residence and pumps for irrigation.

The irrigation pumps and the PV power source which powers them will be portable and identical. Each PV-powered pump will be independent and will irrigate about 5 feddans. The number of PV-powered pumps that are finally procured will be determined by a trade-off among the needs of the village, the ability of the local farmers to till the reclaimed feddans and the total budget available.

The estimate of the various loads and the site specific details of the field test will be as determined in cooperation with Engrs. Irene Sakr and Mohamed Adb El Aal during their visit to Meridian in September 1986.

Meridian will forward a revised schedule for submission of these AR/CD documents as soon as we obtain EEA/AID approval of these conceptual design specifications and reinitiate work on the designs. We request that you give this matter your prompt attention since any delay will affect the reinitiation of these activities.

Sincerely,

MERIDIAN CORPORATION

Deepak Kenkeremath
Project Manager

cc: Mike Ford - LBII
Pete Borgo - MC

APPENDIX D

TRIP REPORTS

TRIP REPORT TO MERSA MATRUH AND EL KASR TO INVESTIGATE PV DESALINATION PLANT (FIELD TEST NO. 8) NOVEMBER 15-17, 1985

Personnel Making Trip:

Mr. Rafik Georgy (EEA)

Mr. Mahmoud Taha (EEA)

Mr. Bruce Watson (Consultant to Meridian Corp. for Desalination Matters)

Mr. James F. Hoelscher, (Meridian Corporation)

Itinerary:

Left Cairo about 4:30 AM November 13, arrived Mersa Matruh about 11:45 PM same date.

Departed Mersa Matruh 7:30 AM November 15, arrived Cairo about 6:00 PM same date.

Personnel Contacted:

Gen. Mohammed Yousr el-Shami, Governor, Matruh

Eng. Sa'ad Kamel, Secretary General, Matruh Governorate

Mohammed Ibraham Faheed, the Engineer responsible for Water Resources in Governorate of Matruh and site Engineer responsible for PV-Desalination project (field Test No. 8).

Mr. Mansour, Secretary General of Council of the City of Mersa Matruh

Eng. Sayed Mukhtar Ahmed (in charge of wind engineering) for EEA

Discussions with Governorate Officials:

When we arrived in Mersa Matruh on the first afternoon we immediately went to the Governorate building to get our permits to visit the site at El Kasr the next day. While we were there we were escorted to the Secretary General's office. During the time our permits were being processed we had an extended discussion with the Secretary General. Among the points he made included the following:

The old pipeline from Alexandria to Mersa Matruh carries 2000 cubic meters of water per day, but it is badly deteriorated.

There are reservoirs which hold 35,000 cubic meters in which to store up for the tourist demand in summer.

The governorate needs more than the 2000 cubic meters per day, so several new methods of getting water are planned.

There are another 150,000 cubic meters per day capacity planned for three different areas. This water originates from Nobariga (an area near Alexandria). Two of the three 50,000 cubic meter blocks will go via a 700 mm pipeline to the Mersa Matruh area; a tourist village in the vicinity of Mersa Matruh and in Mersa Matruh itself. The other 50,000 cubic meters are to be furnished to Alexandria.

There are two electrodyalisis units being installed near Mersa Matruh, each with a capacity of 200 cubic meters per day. There are 10 other units (12 in all) to be installed in the Western desert.

There are three USAID-sponsored (500 cubic meters per day) reverse osmosis units in some stage of procurement. We got no details.

The Secretary General was to leave the next morning for a desalination conference in Bermuda.

The Secretary General was extremely knowledgeable about various types of desalination. He is less familiar with details of alternative energy sources but is nonetheless a booster. He spoke not ony of solar and wind energy for use in desalination but also as an aid for the people who live in villages and have never had any electricity of any type.

There was a discussion on the cost of water---Fresh water prices now charged in the Governorate are:

Commercial/industiral - 1.00 (Egyptian Pounds)/m^3
private users - .14/m^3

All of the units spoken about are conventionally powered (i.e. no wind, solar, etc.). The Secretary General did not speak of the multi-flash distallation unit in Mersa Matruh.

In the evening we had an opportunity to meet the governor. Among other points he made include:

There are many companies who come into the area and do a research project with solar energy and/or wind and then go away and they never see them again. Some of the units appear to be successful. There should be some follow-up to make sure that those projects which are promising are funded and taken beyond the research stage.

SITE VISITS

Note---Accompanying this report is a series of photographs which are submitted under separate cover.

FIRST SITE

On the morning of November 14, after meeting Mr. Mansour, Mohammed Ibraham Faheed, and Eng. Sayed Mukhtar Ahmed, (who accompanied us throughout the day), we proceeded directly to an area called Mowaah, a site about 10 kilometers west of Mersa Matruh, which is on an Army installation.

It is a central pickup point for water. We observed a number of trucks being filled during our visit there. There is no operational desalination units there now but two electrodyalisis units which are powered by the grid with diesel generator backup, are installed and appear about ready to undergo checkout.

Some considerations for siting or not siting the PV-powered desalination plant at Mowaah include the following:

Our hosts from Mersa Matruh recommended against using this because of the way the water storage area is set up.

The site, because it is on a military reservation, should be relatively safe from vandalism.

It is only a kilometer or so from the Mediterranean shore, thereby making it susceptible to corrosion from sea atmosphere.

It would provide a side-by side comparison to the grid-diesel powered electrodyalisis units beind installed.

Because there will be someone already designated to maintain the electrodyalisis units, there ought to be a better chance to get someone to do routine maintenance and checks at a PV-powered desalination plant.

Concerning the necessity of getting properly trained and motivated technical assistance to take data and do maintenance, this site (of the three that we visited) is the closest to Mersa Matruh.

SECOND SITE

The second site we visited is called El Kasr Central. It is located several kilometers west of Mowaah and is about a kilometer from the sea. It is geographically located in an area which has a number of small farms which come directly up to the walls of the enclosure. There is an area outside the enclosure approximately 27 meters x 44 meters which could be used for a PV array. Some other features include:

Six storage reservoirs about 200 cubic meters apiece. They are all interconnected and on the same level.

Pumps are powered by diesels---two of them, one of which was in operation. There is also a power line to the site.

There are no wells at this site; water is piped in from elsewhere.

Considerations for siting or not siting the PV array at El Kasr Central include the following:

Because farms adjoin the enclosure and there are a number of people around, there is some danger of vandalism should the PV array be sited here.

It is a few kilometers from the sea, thereby making the installation somewhat less susceptible to saltwater corrosion (than the last site we visited).

The useful area available to put a solar array on is in doubt. Several of our party feel that because some of the 27 x 44 meter area is needed for trucks to get into the enclosure there would not be enough area left to site a photovoltaic array. An additional consideration is the fact that there is a water pipe buried directly under this area. A solar array could be mounted over this area (where the pipe is buried) but it would be a complication.

There is a small rise in the land to the south which some of our party felt would not provide optimium sun access. However the highest point of the land is only about 3-5° incline from the possible array plot.

THIRD SITE - El Kasr No. 3

The third site we visited was an area about one half kilometer from the sea and the westernmost of the three sites. To get there one must drive through a farming area which is directly back of the rock/sand beach. The beach is

approximately 1 kilometer wide. The water source is a series of four trenches which run parallel to the shoreline and are approximately four meters deep. These trenches, called "Roman Wells", have access holes approximately every 30 meters. We were told that these "wells" were the originally dug in Roman times.

There is a stench of hydrogen sulfide from the water.

Considerations for siting or not siting a PV array include:

- This is almost certainly the site that the writers of the original Request for Proposal had indentified.
- The collection point, where presumably the desalination unit would be located, is on the beach area which is intermittent sand/limestone base.
- Structural support members for a building and/or the PV array should be anchored to the rock which is not a trivial task.
- Our hosts were of the opinion that this should be the place where the desalination unit should be located (as apposed to the first two sites).
- The present collection point is only about 100 meters from the sea making sea-air corrosion a definite problem for all structural members and instrumentation.
- The site is the most distant from Mersa Matruh, making it a potential problem to get qualified maintenance people at the site.
- Presently the water is piped (untreated) via an underground pipe back to the El Kasr Central collection area. If a desalination unit were installed here, there needs to be thought on how the desalted water would be delivered to the potential users. One method discussed was to run a short pipeline (less than 1 km) to a collection station on the farms nearby. This pipeline does not now exist.

Some characteristics common to all three sites include:

- Access to the sun is not a problem on any of the sites. The terrain is not hilly nor are there any tall structures.
- Water samples were taken from each of the three sites and taken back to Cairo for analysis. The results were not known as of the time we left Egypt on Nov. 20.

WATSON DESALINATION FOUNDED 1976
8710 BARNETT ST MANASSAS, VA. 22110 (703) 361-7333 • TELEX 904111 • WADSAL MANA

SUMMARY REPORT

on

Task 1 - SITE VISITS AND APPLICATION REVIEW

for

Field Test Site #8 - Photovoltaic Desalination System
Field Test Site #10 - Wind Energy Desalination System

Contract AID 263-0123C-00-4069-00
Meridian Project No. MC-173

November 1985

CONCEPTUAL DESIGNS, FEASIBILITY STUDIES AND COST ESTIMATES / SCALE AND CORROSION DIAGNOSIS & CONTROL
OPERATIONAL TROUBLESHOOTING AND COST REDUCTION / STAFF INSTRUCTION / MARKETING & TECHNOLOGY CONSULTATION

1.1 TRAVEL SCHEDULE (also submitted as Exit Report)

Nov. 8 Arrived Cairo - to Project Office

9 AM - Flight to Hurghada - meetings with Peter Borgo, Bob Russo, Mohammed Metwally and Issam Shafiq (EEA), David Renne and Bernard Holst (Batelle)

10 AM - To Marine Biological Institute, suggested area for Field Test #10. Discussed siting considerations, present and future water and power needs of Hurghada and environs with:

Dr. Fahry El-Gamal, Institute Director
Dr. Salah, Asst. Director

Viewed facility, substation, fresh water storage and pumping system, seawater supply system.

PM - met 1st Undersecretary, Red Sea Governorate; outlined Project.

Assisted wind energy team with kite measurements.

11 Working sessions re wind/desal siting, design and operating considerations.

12 Return to Cairo Project Office; planning and activities re El Kasr PV/desal site visit.

13 Departure 4 AM by car to Mersa Matrouh with Jim Hoelscher, Rafiq Georgy and Mahmoud Taha.

PM - meeting at Mersa Metrouh Governorate with Secretary-General Saad Kemal and Eng. Mohammed Ibrahim Fahed, i/c Governorate water supply; obtained information on water and power supply planning for Matrouh.

Evening social meeting with Governor, Gen. Mohamed Yousri El-Shami and staff; reviewed project plans and siting factors, and obtained his views.

14 With Eng. Fahed, Eng. Sayed Mokhtar Ahmed (Site Engineer for wind energy) and Mr. Monsour (Sec. Gen. of Local Council for Mersa Matrouh) visited completing EDR facility (2 x 200 m3/d) and municipal brackish water pump station at El Kasr, the central brackish water collection station and El Kasr Extension #3 well field.

PM - visited old 4 x 500 m3/d distillation facility in Mersa Matrouh.

15 Return to Cairo. En route visited American U. Agricultural Research station at Sadat City to view experimental PV arrays and drip irrigation projects.

16 Day off.

17 Project Office - various discussions with Eng. Reda Butros, Dr. Anhar Hegazi and staffs re desal sites and applications.

18 Project Office - additional discussions; short desal seminar for Dr. Hegazi's staff; started Exit Report.

19 AM - to EEA's HV Laboratory, Solar Energy lab to view direct-coupled PV/desal project. Discussed operating factors with Eng. Hassan Rakha relative to power changes and well salinities.

PM - RO software seminar for Egyptian wind and solar staff.

20 - Depart to US

21 - Work on Summary Report

22 - Work on Summary Report

23 - Work on Summary Report

A. Desalination Considerations for Hurghada

Feedwater

Although test drillings might locate a brackish aquifer nearby, the most practical source of feedwater for this location would be the Red Sea itself, primarily because of its stability of chemical composition. This feature is of paramount importance to employment of reverse osmosis (RO) technology for Field Test #10.

Based on many years of application experience, however, the supply must be drawn from a drilled seawater well ("beach well"), rather than a surface intake. This method is to insure clarity and freedom from organic contamination of the membranes by wastewater discharges.

One possible drawback: since a subterranean seawater source is usually devoid of oxygen ("anaerobic"), certain organisms such as sulfate-reducing bacteria may generate sulfides. These ions will form hydrogen sulfide (H_2S) at low pH in the desalting process, and thus require post-treatment of the product water to remove the familiar but unpleasant "rotten egg" odor.

The Institute has records of the local seawater analysis, but were unwilling to let us have copies without the permission of:

Academy of Scientific Research and Technology
101 El-Kasr El-Ainy Street
Cairo

We ask that EEA obtain copies of this data as soon as possible - that is, before the conceptual design stage.

For information, we attach a copy of a sea water well analysis from the Ras El Behar area.

Site

Present location of wind tower adjacent to Marine Institute is apparently favored for the wind turbine, and is also quite acceptable for the desal plant, provided that:

- o reject brine is piped to sea clear of the Marine Institute's intake, and
- o there is adequate area for plant enclosure and product storage tank.

Production Capacity vs Local Needs

The design figure of 50 cu.m/day originally cited appears to be entirely appropriate from a local end-user standpoint.

Hurghada is served by an 8" pipe from Safaga delivering about 1000 cu.m daily, to be augmented by a 10" pipeline which will eventually increase the supply to 4200 cu.m/day by mid-1987.

The Marine Institute and housing compound (total about 250 persons) currently receives some 750 cu.m/month, transferred every other day from Hurghada by pipeline to a central storage facility of 32 cu.m, from where it is distributed to each building.

Dr. Salah said that the compound population is projected to double in about 2 years, so that any additional product water from the wind/desal unit would be welcome indeed.

Current water pricing is:

Hotels and commercial	EL 1.000/cu.m
Private consumers	0.550

Stand-by Power for Desalination at FT #10

We have strongly recommended that initial start-up, acceptance trials and internal optimization runs by the desal system be made independently of the wind turbine to allow evaluation of acceptability against normal industry standards of performance with a constant power source.

This would require site connection to the 85 kva 11.5kv/380v transformer at the Marine Institute. Power requirements for the 50 cu.m/d seawater RO plant and well pump could be 20 - 30 kw at full output, depending upon recovery set by the water analysis (see attached SEARO printout using as an example the Ras El Behar seawater and 30% recovery).

Use pattern could vary between 8 to 24 hours per day, depending upon performance test requirements.

Occasional power interruptions must be anticipated, however. We were told that since part of the 11kv transmission line is above-ground, on especially humid days (wind from the south) insulation breakdowns require isolation of the Marine Institute feeder for as much as 2 - 3 days at a time. There is no backup diesel alternator in the area.

Conclusions and Recommendations re Field Test #10

1. From the desalination system point of view, the location referred to has considerable merit, since it is

- o easily accessible,
- o located near the Marine Institute, whose interest and analytical support if needed will be very helpful,
- o located near product water users who can consume up to full output, but who still have conventional supplies to fall back on,
- o located near enough to the sea to minimize piping from beach well to, and brine discharge from the plant, and
- o located near to a transformer station to tap for constant 380v 3-phase power when needed.

2. The technology employed should be single-stage sea water reverse osmosis, operated at recovery low enough to make chemical pretreatment unnecessary. This combination will maximize reliability and simplicity of operation, though at some penalty in capital and energy cost per unit of output.

3. Product water storage (minimum 25 cu.m) should be provided at the site, with transfer pump and piping to point of use.

4. EEA should be requested to determine what spare capacity is available from the Marine Institute transformer over and above peak loading, for the period until direct coupling to the wind turbine.

5. EEA should be requested to obtain copies of the local seawater analyses made by the Marine Institute.

نموذج رقم ٦٢ (١٣ / -)

THE GENERAL PETROLEUM COMPANY
Laboratories & Production Research Sector

الشركة العامة للبترول
قطاع المعامل والبحوث الانتاجية

WATER ANALYSIS تحليل الماء

File No. 1212/12 REPORT NO. 124/85

Well No. : Ras El Behar Area
Tested Interval :
Zone :
Reference : Under Ground Water Projects Dept Letter 11/11/85

Date Sampled :
Date Analysed : 14/11/85

Radicals		ppm	Hypothetical Combinations	ppm
Potassium	K^{+}		calcium carbonate	131
Sodium	Na^{+}	13246	Mangnesium carbonate	0
Calcium	Ca^{++}	320	calcium Sulphate	1589
Magnesium	Mg^{++}	1344	Magnesium Sulphate	2701
Chloride	Cl^{-}	23334	Calcium chloride	0
Sulphate	So_4^{--}	3276	Magnesium chloride	2910
Carbonate	Co_3^{--}	0	Sodium Sulphate	0
Bicarbonate	Hco_3^{-}	159	Potassium chloride	
			Sodium chloride	33668
Total		42079	Sodium carbonate	

Other Tests	ppm
Total Dissolved Solids	46630
Hydrogen Sulphide H_2S	0
Total Alkalinity As Ca CaO_3	131
Total Hardness " "	7647
Temporary " " "	131
Permanent " " "	7516
Specific Gravity at 20°C	1.029
pH Value at 20°C	7.6
Resistivity Ohm/m at 20°C	0.21
Ca / Mg	0.2

Remarks :

RESERVOIR ANALYSIS DEPT.MANAGER
(FATHALLA M.ABDEEN)

SEA WATER R. O. DESIGN PROGRAM

Desalination Information Systems and Controls Corp.
Manassas, Virginia

FEED SOURCE: RAS EL BEHAR

A. DESIGN SUMMARY

MEMBRANE SYSTEM:	U.O.P.	MODEL NO:	SW7020SS
NO. OF TRAINS:	1	ELEMENTS/VESSEL:	6
PRODUCT FLOW:	9.100001 gpm	2 cu.m/h	
RECOVERY:	30 %		
TEMPERATURE:	68 F	20 C	
INITIAL PRESSURE:	798 psi	56 kg/cm2	
MAXIMUM PRESSURE:	900 psi	63 kg/cm2	

B. TRAIN CONFIGURATION

AGE	VESSELS	FEED FLOW USgpm	PRODUCT FLOW USgpm	BRINE FLOW USgpm	BRINE PRESSURE psi
1	15	30.4	9.1	21.3	860.7
SYSTEM	15	30.4	9.1	21.3	0.0
		cu.m/h	cu.m/h	cu.m/h	kg/cm2
1	15	6.9	2.1	4.8	60.5
SYSTEM	15	6.9	2.1	4.8	

C. ENERGY REQUIREMENTS

(assuming 95% motor and 65% pump efficiencies)

BRAKE HP/TRAIN:	24.5
KWH/1000 US gal:	35.4
KWH/cu.m:	9.3

P R E T R E A T M E N T A N D R E C O V E R Y

ACID ADDITION WITH 30 % RECOVERY AT 20 C

CACO3:

TARGET OPERATING pH: 7.60
REQUIRED DOSAGE - lb 66 Be' H2SO4/kgal feed:
CASO4:

PRETREAT OR REDUCE RECOVERY? UNNECESSARY
MAXIMUM RECOVERY WITH INHIBITOR - PERCENT: 33
10 ppm NaHMP, or (Consult
7 ppm Flocon 100, or membrane
7 ppm AF 100 supplier)

SILICA:

SIO2 SCALE POTENTIAL: NONE
MAXIMUM ALLOWABLE RECOVERY - PERCENT: 97

F I N A L W A T E R A N A L Y S E S

	FEED		BRINE	PRODUCT
	RAW mg/l	TREATED mg/l	mg/l	mg/l
	520.0	520.0	742.[illegible]	0.6
	1544.0	1544.0	2205.0	1.8
	13246.0	13261.3	18860.6	199.9
	0.0	0.0	0.0	0.0
3	159.0	159.0	226.5	1.6
	3276.0	3276.0	4679.8	0.4
	23334.0	23334.0	33200.3	312.6
	0.0	0.0	0.0	0.0
	6.5	6.5	6.5	6.5
2	2.0	2.0	2.8	0.2
	0.0	0.0	0.0	0.0
	0.0	0.0	0.0	0.0
	0.0	0.0	0.0	0.0
	0.0	0.0	0.0	0.0
	42096.3	42096.3	59923.8	517.0
	7.6	7.6	7.5	

Total acid demand = 0.00 lb/1000 US gal. feed
= 0.00 lb/1000 US gal. product

B. Desalination Considerations for El Kasr (FT #8)

Background Information

The coastal region of Matrouh, including the port of Mersa Matrouh is a composite of needs by local population, tourism and the military. Present drinking water supply is by pipeline from Alexandria, capacity 2000 cu.m/d but badly deteriorated by corrosion and illegal tapping along the line. A new 70 cm pipeline, planned for completion in about 7 years, will bring 50,000 cu.m/d of Nile Delta water to the area.

Until now, conventional water supply from Alexandria was conserved during the winter by some 34,000 cu.m of storage as a backlog for the summer months. This was augmented by production from 4 x 500 cu.m/d distillation plants, now old, in poor condition and very inefficient.

The Governorate of Matrouh has contracted with two entities to obtain a short-term solution:

- Ionics, Inc. (Massachusetts) for 12 x 200 cu.m/d reversing polarity electrodialysis desalination (EDR) plants (2 for El Kasr)
- A.I.D., now receiving tenders for 3 x 500 cu.m/d SW reverse osmosis units for Mersa Matrouh itself.

Current power supply for Mersa Matrouh is from 3 x 5 mw open cycle gas turbine/alternator sets. A 2 x 30 mw station is now in planning.

Feedwater

Brackish water for the El Kasr area is obtained from three sources, two of which are described as "Roman wells" and named El Kasr Extension #2 and #3. The third field is of the more conventional drilled well category. Each source is said to have a normal capacity of about 500 cu.m/day.

The Roman well fields each consist of four conduits approximately 1 m in diameter and 665 m long, laid parallel to the beach about 300 m from it at depths ranging from 3 to 8 m. The main feature of these conduits is that they lie on a sloping rock shelf, and through apertures on the landward side collect rainwater seepage from that direction on an average of 0.25 cu.m/d/m of length.

The collected water is transferred from each conduit to a central tank, thence by a 114 HP diesel-driven 3 - stage centrifugal pump some 12 km to the El Kasr collecting tank farm.

Clearly, both quantity and quality of these supplies are substantially affected by rainfall patterns. We were told that salinity may vary from 1100 to 11000 ppm, and on some occasions of prolonged drought, quantity has diminished to zero.

The Central Collection Station is located about 12 km toward El Kasr, and consists of 6 x 200 cu.m inter-connected concrete tanks, one of which is the receiving point from the well fields. A pump house containing three motor-driven and two diesel-driven pumps, each 108 cu.m/h capacity, delivers the blended well waters to the Mowah reservoir in El Kasr itself.

This tank is the source of water for non-potable area use, and is now the feedwater source for the two new 200 cu.m/d high salinity Ionics EDR units scheduled for start-up in one month. Each will require 300 cu.m/d of feed, and is warranteed to produce 250 ppm product water from a feed salinity of 7000 ppm at an electrical energy consumption of 70 kw. No chemical pretreatment is required; polarity reversal frequency is 20 minutes and a weekly acid flush is recommended by the manufacturer.

Significantly, though, prefiltration (Bruner, Milwaukee) is installed, pointing to concern for suspended matter in the feed.

Each plant is equipped with a 100 HP Caterpillar diesel-generator for backup (80 kw, 400v, 3-phase, 50-cycle, PF 0.8).

Three water samples were collected during these visits:

- o El Kasr Extension #3
- o Central Collection tank farm composite, and
- o Mowah reservoir

These were taken to Cairo for analysis by EEA's Central Lab. and transmittal of results to Meridian as soon as possible.

Site

Each of the above locations was considered as a possible site for PV array and desalination plant.

The Central Collection tank farm was easiest to discard for both systems because of restricted space and potential security problems.

We originally felt that the Mowah facility would be preferable for the desal plant because:

- o feedwater salinity at that point would be most homogenous and least variable,
- o proximity to the EDR facility and its operators might be beneficial in terms of common problems, feedwater analyses, etc.,
- o availability of grid power for startup,
- o facility security, and
- o ready access from Mersa Matrouh for a resident operating technician.

However both Governorate and PV personnel appeared to favor El Kasr Extension #3, partly from project philosophy point of view (demonstration value of relative remoteness and potential higher salinity feed), unrestricted solar radiation and clean atmosphere, and a water consuming community in the vicinity.

These factors are admittedly significant to the viability of FT #8 and can be acceptable to the desal plant siting IF:

- o a technical solution can be found for dealing with the wide swings in feedwater salinity reported,
- o constant power at 380v is available for start-up tests, and
- o site accessibility (presently a tortuous 15 minute trip off-road by 4-wheeler) is improved for daily and emergency visits by the operating technician.

Desalination System Design Constraints

Reverse osmosis desalination is reliant on a reasonably constant feed salinity. For the El Kasr #3 site, a feedwater ranging from 1100 to 11000 ppm would ostensibly require a design based upon the highest salinity anticipated. Unfortunately, membrane sizing and design pressure for that condition would be totally unfitting for much lower salinities, which would create production rates and brine flow rates completely at odds with the design.

Re-adjustment of operating pressure, recovery and chemical treatment would be of some help, but to maintain simultaneously

- o brine flows within membrane safety requirements,
- o chemical pretreatment and recovery rates within non-scaling limits, and
- o product water salinity within potability limits

is a complex task even over lesser extremes of feedwater salinities.

We recommended that, starting immediately, regular sampling and analysis of the El Kasr Extension #3 tank be made by EEA to develop some preliminary information on salinity variations with time. If initially coupled with on-site conductivity and pH measurements, correlations should enable eventual elimination of the need for EEA Central Lab analyses.

Nevertheless, it would be prudent at this stage to open consideration of other desalination technologies such as EDR, which rightfully claims less sensitivity to internal hydraulic problems introduced by feedwater changes. This state-of-art is apparently gaining acceptance in the region, particularly where there is feedwater instability.

Production Capacity vs Local Needs

With PV power, a nominal 50 cu.m/d desal plant should produce about 12 cu.m/d, at a power demand of around 10 kw for the high salinity case.

A small village nearby El Kasr Extension #3 could be supplied with all this product as available.

Stand-by Power for Desalination

For the same reasons advanced for Hurghada, we recommend that a constant source of power be available during startup and evaluation.

This would require a 380v 3-phase power source in the vicinity, with a use pattern of from 8 to 24 hours a day in the early phases.

Conclusions and Recommendations re Field Test #8

1. From the desalination system standpoint, the location preferred by the Governorate has some limitations, chief of which is a reported wide variation in feedwater salinity from 1100 to 11000 ppm TDS. This poses considerable complexity for a reverse osmosis system, and if verified as fairly frequent must open consideration to other desal technologies such as EDR.

In light of the above, task 2 (Technology Review) should be expanded in scope to include EDR - est. additional 3 man-days.

2. Product water storage (minimum 10 cu.m) should be provided at site, with transfer pump and piping to point of use.

3. EEA should be requested to make regular (biweekly) sampling of the El Kasr #3 tank, to begin characterization of salinity changes vs calendar time.

4. EEA should be requested to determine what spare capacity is available at the nearest 380v 3-phase transformer taps.

APPENDIX E

REPORT ON CONCEPTUAL DESIGN

FOR FIELD TEST SITE #8

REPORT

on

CONCEPTUAL DESIGN

for

Field Test Site #8 - Photovoltaic Brackish Desalination System

Contract AID 263-0123C-00-4069-00

Meridian Project No. MC-173

May 26, 1986

Conceptual Design

of

Brackish Systems

Introduction

The following study will establish the conceptual design for the Desalination units required to treat brackish water. The systems will employ the Reverse Osmosis and Electrodialysis processes. The power source for the systems will be solar-photovoltaic units.

The Desalting systems will be designed to have:

a) Optimum energy use

b) Operating flexibility on brackish water with a TDS range of 1000 mg/l to 12,000 mg/l.

Design

A. Water Analysis.

The water analysis to be used is shown in Figure 1 under the Column titled "KASAR EXT."

The cations and anions do not balance, as shown; we therefore balanced the analysis by the addition of 145 mg/l of Sodium (see Figure 2). The analysis was converted from calcium carbonate to "as the ion values."

The analysis does not show Silica (SiO_2); we should therefore confirm the Silica content, since Silica is a potential scalant.

The KASAR EXT. is an old Roman well and as such is more of an open channel than a conventional deep well. This construction permits contamination by particulate matter and oxidation of metals (Iron) and Hydrogen Sulfide (H_2S), if they are present. It has been reported that a strong H_2S odor was noticeable at these wells. The presence of particulate matter and/or oxidation byproducts can be ascertained by the Salt Density Index (SDI). It is urgent that the SDI be taken in order to establish what, if any, pretreatment is required.

It is very important that the test for SiO_2, H_2S and SDI be performed before final equipment specifications are prepared.

B. Design Parameters

The following parameters were used in establishing the designs:

1. Capacity - 15 m^3/day

   Designs were evaluated on the basis of both a 24-hour and 8-hour day.

2. Product Water Quality will be 500 mg/l or less Total Dissolved Solids (TDS).

3. The design will minimize energy consumption while maintaining simplicity of operation.

4. The system will be capable of treating water with 1000 to 12,000 mg/l TDS.

C. Reverse Osmosis

A wide range of operating recoveries and pressures were evaluated at the TDS levels of 1000, 7195, and 11750 mg/l. The initial design was based upon a 24-hour day.

At the 11750 TDS level, a 2-Stage system with a maximum recovery of 55% was selected. Higher recoveries resulted in excessive operating pressures in order to maintain a product quality of less than 500 TDS.

In addition, higher recoveries resulted in brine flows that were significantly below recommended limits.

A 2-Stage system was selected to maintain adequate brine flows and to provide a product TDS of less than 500 mg/l.

Figures 2 to 7 are computer printouts of the process design for a system that will operate as indicated at the 1000, 7195 and 11750 TDS levels. The systems described are based upon 24-hour operation. The figures show the pretreatment, design summary, and a simplified process flow diagram for each of the three cases.

The systems employ a thin film composite membrane having a 2½ inch diameter and a length of 40 inches. Four elements are used in each pressure vessel and each system uses three pressure vessels arranged in a 2 x 1 array. A FilmTec model BW30-2540 element was selected for this design.

The systems have a 24-hour rated capacity of 2.75 gpm (15 m^3/day), but operate at different pressure levels depending upon the feedwater Total Dissolved Solids (TDS).

An operating temperature of 25°C was assumed.

Figures 8 and 9 describe a system that will produce the required 15 m^3/day in 8 hours. The system geometry is the same as in the 24-hour case; namely, 2 x 1 pressure vessel array with four (4) elements per vessel. However, the elements

are larger (4 inches diameter and a length of 40 inches), and produce approximately three times as much water. The pressure vessels have a larger diameter to accommodate the larger elements. A FilmTec model BW30-4040 was selected for this design; however, there are a number of companies that manufacture similar type elements.

The major difference between the 8-hour and 24-hour systems are the physical size, greater pumping rates, and higher instantaneous power requirements. However, the specific power (KWH/1000 gals) is the same. Figure 10 shows the product flows, operating pressures, and relative power consumption for all three TDS ranges.

The advantages of the larger system are (1) the ability to produce the full water requirement during 8 hours of daylight; (2) the larger four-inch elements are more readily available and are an industrial standard.

The disadvantages are (1) higher capital cost; (2) higher instantaneous power demand.

Figure 11 shows the relationship between feed water TDS and power requirements for a given size system (15 m^3/day, 8-hour day). The power requirements for the 8-hour system are three times those for 24-hour operation. At TDS levels of 1018 mg/l, 7328 mg/l, and 11750 mg/l, the power requirements for 8-hour operation are 1.74 KW, 2.65 KW, and 3.42 KW, respectively. The specific energy is 3.38, 5.26, and 6.86 KWH/1000 gals for TDS levels of 1018, 7328, and 11750 mg/l, respectively.

D. Electrodialysis

Tables I, II and III define the water analysis used to design the ED System.

Figures 12 and 13 (sub. fig. 3) describe the ED system. The system consists of a low pressure feed pump, four membrane stacks, brine recirculation pump, and required controls. Each stack will consist of one electrical stage and 2 hydraulic stages.

In the 1000 TDS case, the stacks will operate in parallel; in the 7000 and 12000 TDS cases, the stacks will be piped in series.

The system operating characteristics and power requirements are shown in Table IV.

The system was designed on the basis of a constant energy requirement of 60 KWH per 8-hour day, or a total power of 7.5 KW.

The specific energy varies from 2.3 KWH/K gal. at 1000 TDS to 25.25 KWH/K gal. at 12,000 TDS.

The product flow also varies with TDS, ranging from 100 m^3/day at 1000 TDS to 9 m^3/day at 12000 TDS. The 100 m^3/day may be reduced by operating only one stack, thus reducing the capacity to 25 m^3/day. (Note: Data based on 8-hour day.)

In the 12000 TDS case, the unit would have to operate for 13.3 hours to produce 15 m^3/day.

The electrodialysis process is well suited for solar applications, because the system self-corrects for increases or decreases in available energy.

As the solar energy increases, the D C pumps will increase flow rate and the D C desalting power will increase, providing more product water.

E. Pretreatment

The Reverse Osmosis system will require pretreatment to prevent $CaCO_3$ scaling. The design of the RO system was based upon the addition of acid to prevent the calcium carbonate scale. However, depending upon the information available on the feed water characteristics at the time of bidding, antiscalant chemicals may be proposed. The chemical feed pump should add a maximum of .025 KW to the overall system requirements.

The ED system will not require chemical addition because the reverse polarity technique will minimize scaling potential.

Data on the particulate contamination (SDI) is not available. In addition, the nature of the wells could result in increased levels of particulate contamination. We therefore propose that a media filter be placed ahead of the RO or ED units to minimize particulate fouling. This is shown in the ED System diagram, Figure 12. This should add a maximum of 15 psi to the well-pump pressure head feeding the RO or ED units.

Conclusion

The Reverse Osmosis and Electrodialysis systems will require dual media pressure filters as pretreatment for the feed water.

The RO system will require an acid feed system after the dual media filter.

The RO system will be designed on the basis of an 8-hour operating day. The design will be as defined in Figure 8 and Figure 9. It will consist of the following:

1. A 2-stage configuration having a pressure vessel array of 2 x 1 with each pressure vessel containing spiral wound elements.

2. Spiral wound elements shall be 4 inches in diameter and 40 inches long. The membranes shall be of the Thin Film Composite type.

3. A positive displacement high pressure pump with a maximum motor rating of 5 HP.

4. A ten (10) micron cartridge filter will be located ahead of the high pressure pump to protect the system from failure of the media filters.

The Electrodialysis system will be designed on the basis of an 8-hour day. The design will be as defined in Figure 12 and Figure 13. It will consist of the following:

1. Low Pressure Feed Pump
2. Four (4) Electrodialysis Reverse Polarity stacks
3. Brine Recirculation Pump
4. Micron Cartridge Filter between Media Filter and ED stacks.

A power comparison of ED and RO, based on the 7000 TDS feed water and 8-hour operation, shows the following:

ED Power-KW	7.5
Well Pump (600 ft. of 1½" Pipe + Micron Filter)	.4
ED Total KW	7.9
ED Specific Energy KWH/K gal	15.1
RO Power-KW	2.65
Well Pump (600 ft. of 1½" Pipe + Media Filter + Micron Filter)	.5
Chemical Feed Pump	.025
RO Total KW	3.175
RO Specific Energy KWH/K gal	5.20

As is apparent, the Reverse Osmosis system uses considerably less power. However, it is less flexible than ED and prefers operation at its design point. Reducing pressure will reduce output but will also increase the salt content of the treated effluent .

The ED system, while requiring more power, makes more efficient use of the available PV power, since ED is a direct current process. The ED is flexible in that it will change the product water capacity to meet available energy conditions.

Unless there is an overriding benefit to one process over the other in its adaptation to the solar power system, it is our recommendation that the RFP should ask for both ED and RO proposals.

292079 LBI UR

RCA DEC 19 1222
21918 SONRA UN

Tack 3
Please fax this to DK at MC ASAP TSW 12/19/85

DEC 19,1985
TO :THOMAS G.WEST , LBII
FROM=ROBERT C.SPONGBERG , LBII
REF :ARE 0085/85 C

RECEIVED THE FOLLOWING FROM TABLAWI QUOTE AS FOLLOWS :
AA.RE YOUR TLXS DATED DEC .3 AND 4, 1985 CONCERNING WATER ANALYSIS OF THE THREE SAMPLES TAKEN DURING HOELSCHER/ WATSON VISIT KINDLY BE INFORMED BY THE RESULTS AS FOLLOWS :

Figure 1

	KASAR 6 TANKS	EDR 1 TANKS	KASAR (3)	EXT. ion
PH	7.15	7.4	7.6	
CONDUCTIVITY M MHOS	11800	9200	10900	
T.D.S.(TOTAL DISSOLVED SOLIDS)	7080	5520	6540	
PARTIAL ALKALINITY MG/L AS CACO3	ZERO	ZERO	ZERO	
TOTAL ALKALINITY MG/L AS CACO3	195	200	250	305
TOTAL HARDNESS MG/L AS CACO3	1650	1400	1620	
CALCIUM HARDNESS MG/L AS CACO3	450	420	420	168
MAGNESIUM HANDNESS MG/L AS CACO3	1200	980	1200	291
CHLORIDES HANDNESS MG/L AS CACO3	5591	4925	5052	3583
SULPHATES HANDNESS MG/L AS CACO3	667	471	877	843
SOLDIUM HANDNESS MG/L AS CACO3	4347	3971	4130	1903
POTTASIUM HANDNESS MG/L AS CACO	102	77	115	90

BB.WE HAVE ARRANGED WITH MATRUH PERSONNEL CONCERNED SENDING WATER SAMPLES FROM EL KASR (3) TANK ON BI-WEEKLY BASIS FOR ANALYSIS IN CAIRO EEA LAB .

CC.WE CHECKED WITH MATRUH RESPONSIBLE PEOPLE THE POSSIBILITY OF HAVING CONDUCTICITY MEASUREMENT MADE ON SITE AND UNFORTUNATELY THE ANSWER WAS THAT IT IS NOT POSSIBLE FOR THE TIMEBEING . HOWEVER , AFTER SENDING US THE NEEDED MEASURING EQUIPMENT DISCUSSED DURING HOELSCHER / WATSON VISIT IT WOULD BE POSSIBLE TO ARRANGE AN ON -SITE CONDUCTIVITY MEASUREMENT . ACCORDINGLY , WE REQUEST YOU SEND US A/M MEASURING EQUIPMENT ASAP .
BEST REGARDS
UNQUOTE
KINDLY PASS THE ABOVE MESSAGE TO PETER BURGO , MC STOP

FROM VIVIAN AZIZ STOP REYOURS 065/85 I, 16 DEC . INVOICE 16 HAND CARRIED BY SEYOUM SOLOMON STOP REGARDS

Figure 2

BRACKISH REVERSE OSMOSIS PROCESS AND SYSTEM DESIGN

PRETREATMENT

CID REQUIREMENTS
PERATING pHFA 6.30
6 Be ACID - #/F GAL. FEED 1.11#/F GAL.PRODUCT 2.02
O CALCIUM SULFATE SCALE
aSO4 MAX. ALLOWABLE RECOVERY WITH 10 MG/L NaHMP OR 7 MG/L OF ANTISCALANT .79
O SiO2 SCALE
iO2 MAX. ALLOWABLE RECOVERY.00
O STRONTIUM SULFATE SCALE
rSO4 MAX. ALLOWABLE RECOVERY WITH 10 MG/L NaHMP OR 7 MG/L OF ANTISCALANT.79
O BARIUM SULFATE SCALE
aSO4 MAX. ALLOWABLE RECOVERY WITH 10 MG/L NaHMP OR 7 MG/L OF ANTISCALANT .79

WATER ANALYSIS

	FEED				BRINE	
	RAW		ACIDIFIED			
	ION	CaCO3	ION	CaCO3	ION	CaCO3
a	168.0	420.0	168.0	420.0	373.3	933.3
g	291.0	1198.9	291.0	1198.9	646.7	2664.3
a	1903.0	4444.7	2048.3	4444.7	4551.7	9877.2
	90.0	115.2	90.0	115.2	200.0	256.0
ATIONS		6178.85				
CO3	305.0	250.1	150.9	123.7	335.3	275.0
O4	843.0	876.7	964.5	1003.1	2143.3	2229.1
l	3583.0	5052.0	3583.0	5052.0	7962.2	11226.7
O3	0.0	0.0	0.0	0.0	0.0	0.0
NIONS		6178.85				
O2	12.5		123.7		123.7	
iO2	0.0		0.0		0.0	
e	0.0		0.0		0.0	
	0.0		0.0		0.0	
a	0.0		0.0		0.0	
r	0.0		0.0		0.0	
DS	7195.535		7295.664		16285.03	
H	7.6		6.3		6.6	
ECOVERY	55					
	25					
DI	0					
SI	-.00034					
IS	.3803665					

Best Available Document

Figure 2 Cont'd

DESIGN SUMMARY

BY R.QUINN FOR ROA
DATE 01-01-1980
PRODUCT FLOW 2.8(0.6) GPM(CU.M./HR) 4062(15) GPD(CU.M./D)
RECOVERY 55 TEMPERATURE 25 C
MEMBRANE SYSTEM FT MODEL BW2540 4
MAX.OPER.PRESSURE 341(24) PSI(KGR./SQ.CM) NO. OF TRAINS 1
INITIAL PRESSURE 290(20) PSI(KGR/SQ.CM)

TRAIN CONFIGURATION

STAGE	VESSELS	FEED FLOW GPM(C.M/HR)	PRODUCT FLOW GPM(C.M/HR)	BRINE FLOW GPM(C.M/HR)	BRINE PRESSURE PSI(Kg/Sq.Cm)
1	2	5.1(1.2)	2.2(0.5)	2.9(0.7)	266.2(18.7)
2	1	2.9(0.7)	0.6(0.1)	2.3(0.5)	229.0(16.1)
SYSTEM	3	5.1(1.2)	2.8(0.6)	2.3(0.5)	

FINAL WATER ANALYSIS

	FEED RAW MG/L	FEED ACIDIFIED MG/L	BRINE MG/L	PRODUCT MG/L
Ca	168.0	168.0	368.8	3.7
Mg	291.0	291.0	636.7	8.1
Na	1903.0	2048.3	4445.9	86.5
K	90.0	90.0	193.7	5.2
HCO3	305.0	150.9	324.1	9.2
SO4	843.0	964.5	2115.6	22.7
Cl	3583.0	3583.0	7783.6	146.1
NO3	0.0	0.0	0.0	0.0
CO2	12.5	123.7	123.7	123.7
SiO2	0.0	0.0	0.0	0.0
Fe	0.0	0.0	0.0	0.0
[illegible]	0.0	0.0	0.0	0.0
Ba	0.0	0.0	0.0	0.0
Sr	0.0	0.0	0.0	0.0
TDS	7328.3	7295.7	15868.4	281.6

OPERATING pHFA 6.3
66 Be ACID - #/K GAL. FEED 1.11#/K GAL.PRODUCT 2.02
BRAKE HORSEPOWER = 1.134164
KWH/1000 GAL. OF PRODUCT = 5.451407

Best Available Document

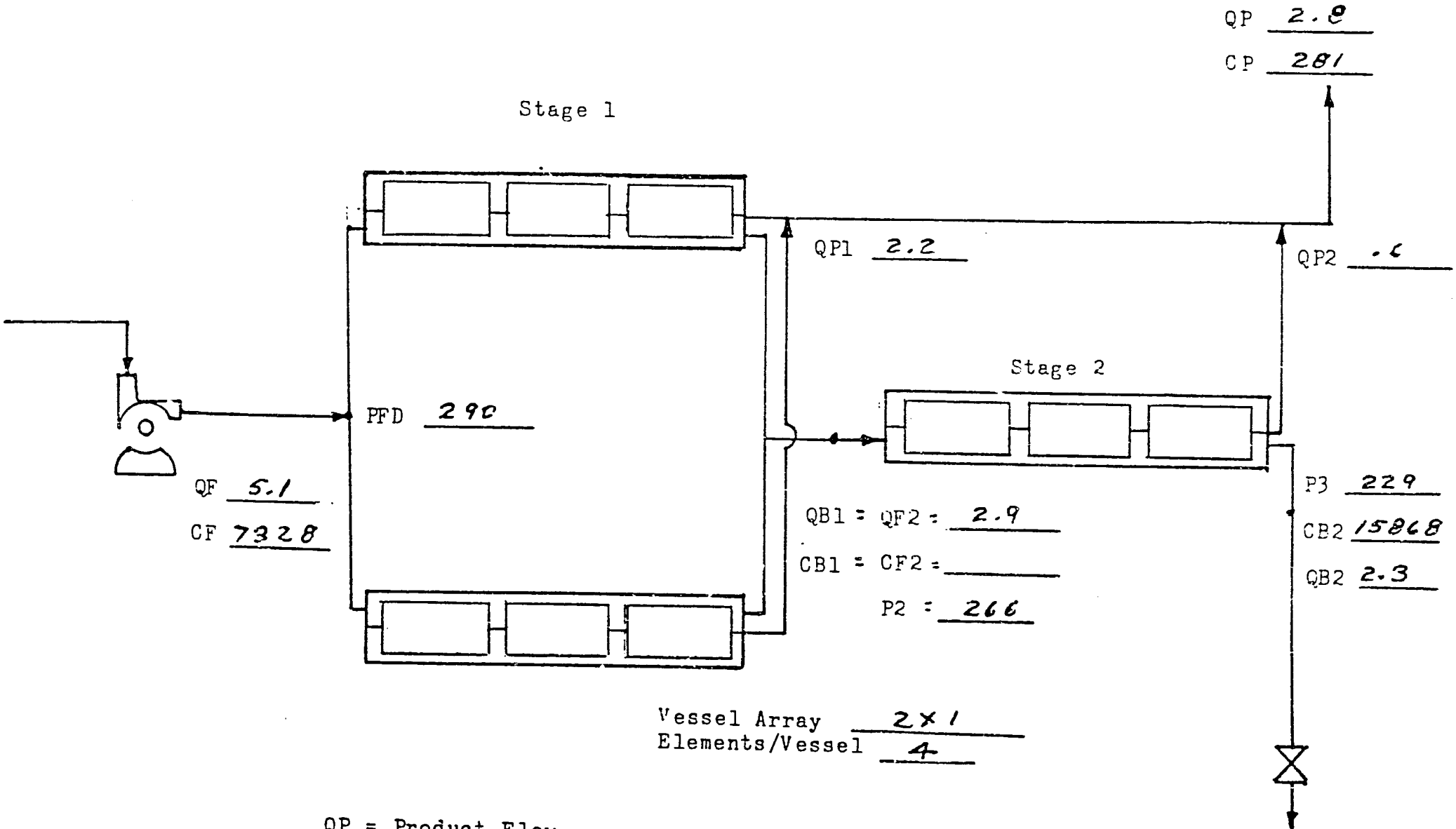

QP = Product Flow

QF = Feed Flow

QB = Brine Flow

C = Salt Concentration

P = Pressure

Fig. 3

Figure 4

BRACKISH REVERSE OSMOSIS PROCESS AND SYSTEM DESIGN

PRETREATMENT

NO CALCIUM CARBONATE SCALE
NO CALCIUM SULFATE SCALE
CaSO4 MAX. ALLOWABLE RECOVERY WITH 10 MG/L NaHMP OR 7 MG/L OF ANTISCALANT .97
NO SiO2 SCALE
SiO2 MAX. ALLOWABLE RECOVERY.00
NO STRONTIUM SULFATE SCALE
SrSO4 MAX. ALLOWABLE RECOVERY WITH 10 MG/L NaHMP OR 7 MG/L OF ANTISCALANT.97
NO BARIUM SULFATE SCALE
BaSO4 MAX. ALLOWABLE RECOVERY WITH 10 MG/L NaHMP OR 7 MG/L OF ANTISCALANT .97

WATER ANALYSIS

	FEED				BRINE	
	RAW		ACIDIFIED			
	ION	CaCO3	ION	CaCO3	ION	CaCO3
Ca	22.9	57.3	22.9	57.3	50.9	127.2
Mg	39.7	163.6	39.7	163.6	88.2	363.5
Na	270.0	622.2	286.7	622.2	637.1	1382.6
	12.3	15.7	12.3	15.7	27.3	35.0
CATIONS		858.712				
HCO3	41.6	34.1	41.6	34.1	92.4	75.8
O4	115.0	119.6	115.0	119.6	255.6	265.8
Cl	500.0	705.0	500.0	705.0	1111.1	1566.7
NO3	0.0	0.0	0.0	0.0	0.0	0.0
NIONS		858.712				
CO2	1.7		1.7		1.7	
SiO2	0.0		0.0		0.0	
e	0.0		0.0		0.0	
F	0.0		0.0		0.0	
Ba	0.0		0.0		0.0	
r	0.0		0.0		0.0	
TDS	1003.21		1018.207		2262.682	
H	7.6		7.6		7.9	
ECOVERY	55					
T	25					
DI	0					
SI	-.03052					
TIS	4.574541E-02					

Figure 4 Cont'd

DESIGN SUMMARY

BY R.QUINN FOR ROA
DATE 01-01-1980
PRODUCT FLOW 2.8(0.6) GPM(CU.M./HR) 4038(15) GPD(CU.M./D)
RECOVERY 55 TEMPERATURE 25 C
MEMBRANE SYSTEM FT MODEL BW2540 4
MAX OPER.PRESSURE 212(15) PSI(KGR./SQ.CM) NO. OF TRAINS 1
NO OPR PRESSURE 180(13) PSI(KGR/SQ.CM)

TRAIN CONFIGURATION

STAGE	VESSELS	FEED FLOW GPM(C.M/HR)	PRODUCT FLOW GPM(C.M/HR)	BRINE FLOW GPM(C.M/HR)	BRINE PRESSURE PSI(Kg/Sq.Cm)
1	2	5.1(1.2)	2.0(0.5)	3.1(0.7)	155.8(11.0)
2	1	3.1(0.7)	0.8(0.2)	2.3(0.5)	117.2(8.2)
SYSTEM	3	5.1(1.2)	2.8(0.6)	2.3(0.5)	

FINAL WATER ANALYSIS

	FEED RAW MG/L	FEED ACIDIFIED MG/L	BRINE MG/L	PRODUCT MG/L
Ca	22.9	22.9	50.3	0.5
Mg	39.7	39.7	86.8	1.1
Na	270.0	286.7	621.9	12.5
K	12.3	12.3	26.4	0.7
HCO3	41.6	41.6	89.3	2.6
SO4	115.0	115.0	252.2	2.7
Cl	500.0	500.0	1085.9	20.6
NO3	0.0	0.0	0.0	0.0
CO2	1.7	1.7	1.7	1.7
SiO2	[illegible]	0.0	0.0	0.0
Fe	0.0	0.0	0.0	0.0
F	0.0	0.0	0.0	0.0
Ba	0.0	0.0	0.0	0.0
Sr	0.0	0.0	0.0	0.0
TDS	1018.2	1018.2	2212.8	40.8

OPERATING pHFA 7.6
[illegible] Be ACID - #/K GAL. FEED 0.00#/K GAL.PRODUCT 0.00
BRAKE HORSEPOWER = .6998616
KWH/1000 GAL. OF PRODUCT = 3.383632

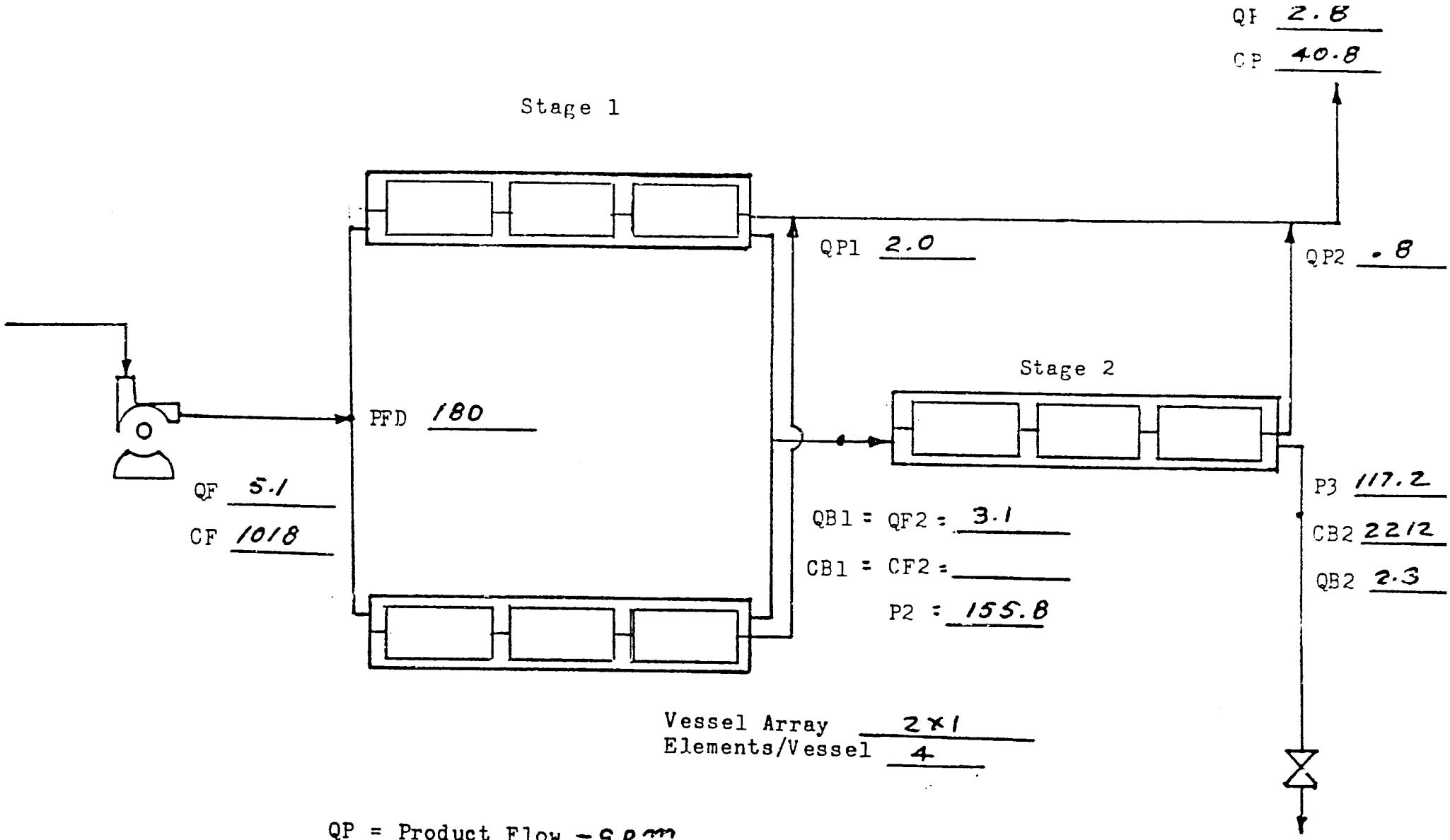

QP = Product Flow - gpm
QF = Feed Flow - "
QB = Brine Flow - "
C = Salt Concentration - Mg/l
P = Pressure - psi

Fig. 5

Figure 6

BRACKISH REVERSE OSMOSIS PROCESS AND SYSTEM DESIGN

PRETREATMENT

ACID REQUIREMENTS
OPERATING pHFA 6.00
56 B. ACID - #/K GAL. FEED 2.54#/K GAL.PRODUCT 4.61
NO CALCIUM SULFATE SCALE
CaSO4 MAX. ALLOWABLE RECOVERY WITH 10 MG/L NaHMP OR 7 MG/L OF ANTISCALANT .64
NO SiO2 SCALE
SiO2 MAX. ALLOWABLE RECOVERY.00
NO STRONTIUM SULFATE SCALE
SrSO4 MAX. ALLOWABLE RECOVERY WITH 10 MG/L NaHMP OR 7 MG/L OF ANTISCALANT.64
NO BARIUM SULFATE SCALE
BaSO4 MAX. ALLOWABLE RECOVERY WITH 10 MG/L NaHMP OR 7 MG/L OF ANTISCALANT .64

WATER ANALYSIS

	FEED				BRINE	
	RAW		ACIDIFIED			
	ION	CaCO3	ION	CaCO3	ION	CaCO3
Ca	285.0	712.5	285.0	712.5	633.3	1583.3
Mg	496.0	2043.5	496.0	2043.5	1102.2	4541.2
Na	3245.0	7041.6	3245.0	7041.6	7211.1	15648.1
	153.0	195.8	153.0	195.8	340.0	435.2
CATIONS		9993.51				
HCO3	520.0	427.4	168.2	137.9	373.8	306.5
SO4	1437.0	1494.5	1714.4	1782.9	3809.7	3962.1
Cl	5593.0	8072.6	5725.3	8072.6	12722.8	17939.2
CO3	0.0	0.0	0.0	0.0	0.0	0.0
ANIONS		9993.51				
SiO2	21.4		275.2		275.2	
Fe	0.0		0.0		0.0	
	0.0		0.0		0.0	
	0.0		0.0		0.0	
Ba	0.0		0.0		0.0	
Sr	0.0		0.0		0.0	
TDS	11750.37		11786.85		26358.38	
pH	7.6		6.0		6.3	
RECOVERY	55					
	25					
SDI	0					
LSI	-.04672					
RSI	.6275711					

Figure 6 Cont'd

DESIGN SUMMARY

BY R.QUINN FOR RQA
DATE 01-01-1980
PRODUCT FLOW 2.7(0.6 GPM(CU.M./HR) 3921(15) GPD(CU.M./D)
RECOVER 55 TEMPERATURE 25 C
MEMBRANE SYSTEM FT MODEL BW2540 4
MAX.OPER.PRESSURE 429(30) PSI(KGR./SQ.CM) NO. OF TRAINS 1
INITIAL PRESSURE 365(26) PSI(KGR/SQ.CM)

TRAIN CONFIGURATION

STAGE	VESSELS	FEED FLOW GPM(C.M/HR)	PRODUCT FLOW GPM(C.M/HR)	BRINE FLOW GPM(C.M/HR)	BRINE PRESSURE PSI(Kg/Sq.Cm)
1	2	5.0(1.1)	2.2(0.5)	2.8(0.6)	343.2(24.1)
2	1	2.8(0.6)	0.5(0.1)	2.2(0.5)	308.5(21.7)
SYSTEM	3	5.0(1.1)	2.7(0.6)	2.2(0.5)	

FINAL WATER ANALYSIS

	FEED RAW MG/L	FEED ACIDIFIED MG/L	BRINE MG/L	PRODUCT MG/L
Ca	285.0	285.0	625.6	6.4
Mg	496.0	496.0	1085.0	14.1
Na	3245.0	3245.0	7040.8	139.3
K	153.0	153.0	329.0	9.0
HCO3	520.0	168.2	361.0	10.5
SO4	1437.0	1714.4	3759.4	41.2
Cl	5593.0	5725.3	12431.2	238.6
NO3	0.0	0.0	0.0	0.0
CO2	21.4	275.2	275.2	275.2
SiO2	0.0	0.0	0.0	0.0
Fe	0.0	0.0	0.0	0.0
F	0.0	0.0	0.0	0.0
Ba	0.0	0.0	0.0	0.0
Sr	0.0	0.0	0.0	0.0
TDS	11861.3	11786.9	25632.1	459.0

OPERATING pHFA 6.0
66 Be ACID - #/K GAL. FEED 2.54#/K GAL.PRODUCT 4.61
BRAKE HORSEPOWER = 1.377862
KWH/1000 GAL. OF PRODUCT = 6.861253

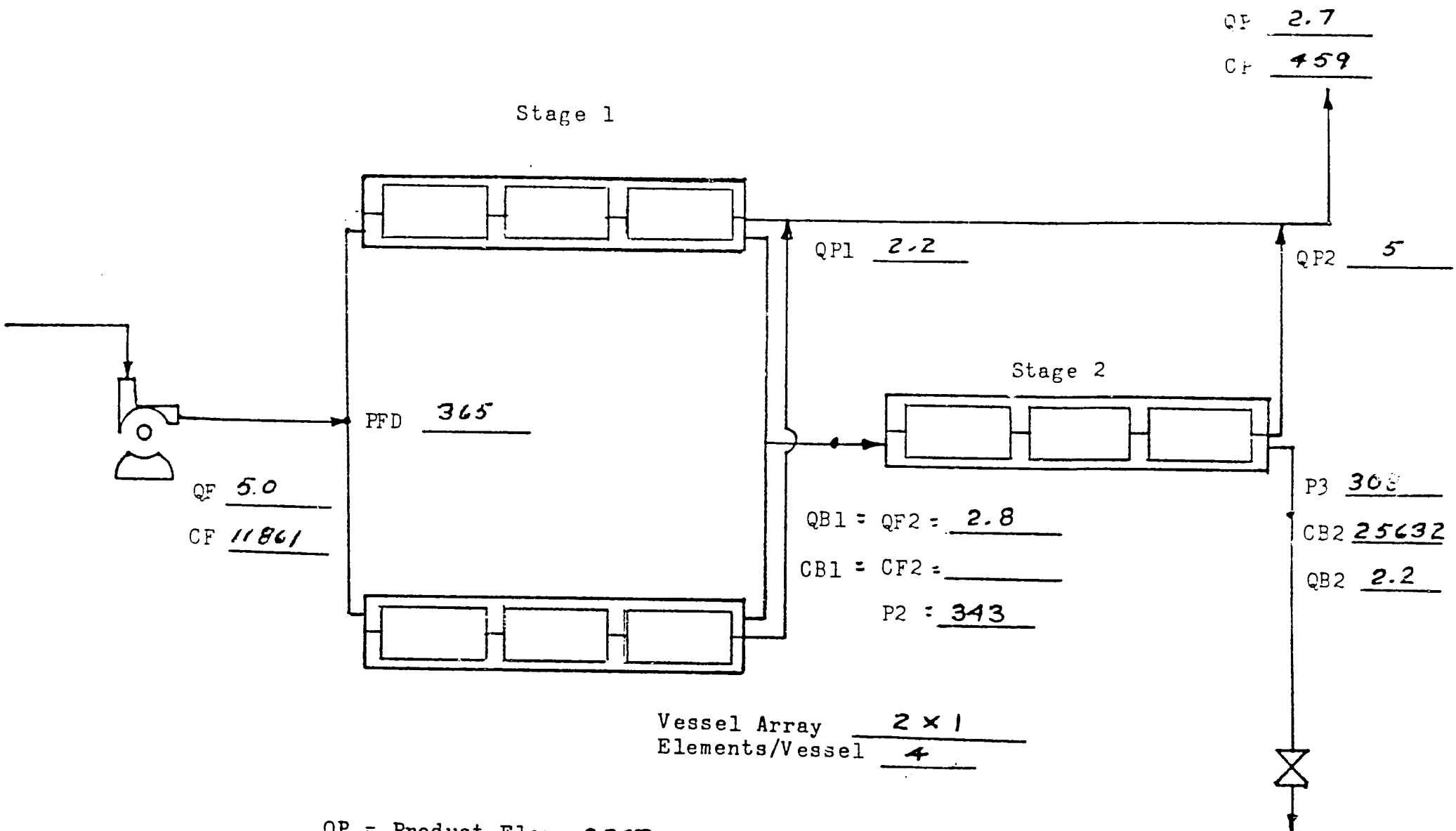

QP = Product Flow – gpm

QF = Feed Flow – "

QB = Brine Flow – "

C = Salt Concentration – Mg/ℓ

P = Pressure – psi

Fig. 7

Figure 8

DESIGN SUMMARY

BY R.QUINN FOR RQA
DATE 05-16-1986
PRODUCT FLOW 8.3(1.9) GPM(CU.M./HR) 11880(45) GPD(CU.M./D)
RECOVERY 55 TEMPERATURE 25 C
MEMBRANE SYSTEM FT MODEL BW4040 4
MAX.OPER.PRESSURE 329(23) PSI(KGR./SQ.CM) NO. OF TRAINS 1
INITIAL PRESSURE 280(20) PSI(KGR/SQ.CM)

TRAIN CONFIGURATION

STAGE	VESSELS	FEED FLOW GPM(C.M/HR)	PRODUCT FLOW GPM(C.M/HR)	BRINE FLOW GPM(C.M/HR)	BRINE PRESSURE PSI(Kg/Sq.Cm
1	2	15.0(3.4)	6.3(1.4)	8.7(2.0)	264.2(18.6)
2	1	8.7(2.0)	2.0(0.4)	6.8(1.5)	239.3(16.8)
SYSTEM	3	15.0(3.4)	8.3(1.9)	6.8(1.5)	

FINAL WATER ANALYSIS

	FEED RAW MG/L	FEED ACIDIFIED MG/L	BRINE MG/L	PRODUCT MG/L
Ca	168.0	168.0	368.7	3.8
Mg	291.0	291.0	636.4	8.4
Na	1903.0	2048.3	4442.4	89.4
K	90.0	90.0	193.4	5.4
HCO3	305.0	150.9	323.7	9.5
SO4	843.0	964.5	2114.7	23.4
Cl	3583.0	3583.0	7777.6	151.1
NO3	0.0	0.0	0.0	0.0
CO2	12.5	123.7	123.7	123.7
SiO2	0.0	0.0	0.0	0.0
Fe	0.0	0.0	0.0	0.0
F	0.0	0.0	0.0	0.0
Ba	0.0	0.0	0.0	0.0
Sr	0.0	0.0	0.0	0.0
TDS	7328.3	7295.7	15856.9	291.0

OPERATING pHFA 6.3
66 Be ACID - #/K GAL. FEED 1.11#/K GAL.PRODUCT 2.02
BRAKE HORSEPOWER = 3.202634
KWH/1000 GAL. OF PRODUCT = 5.263426

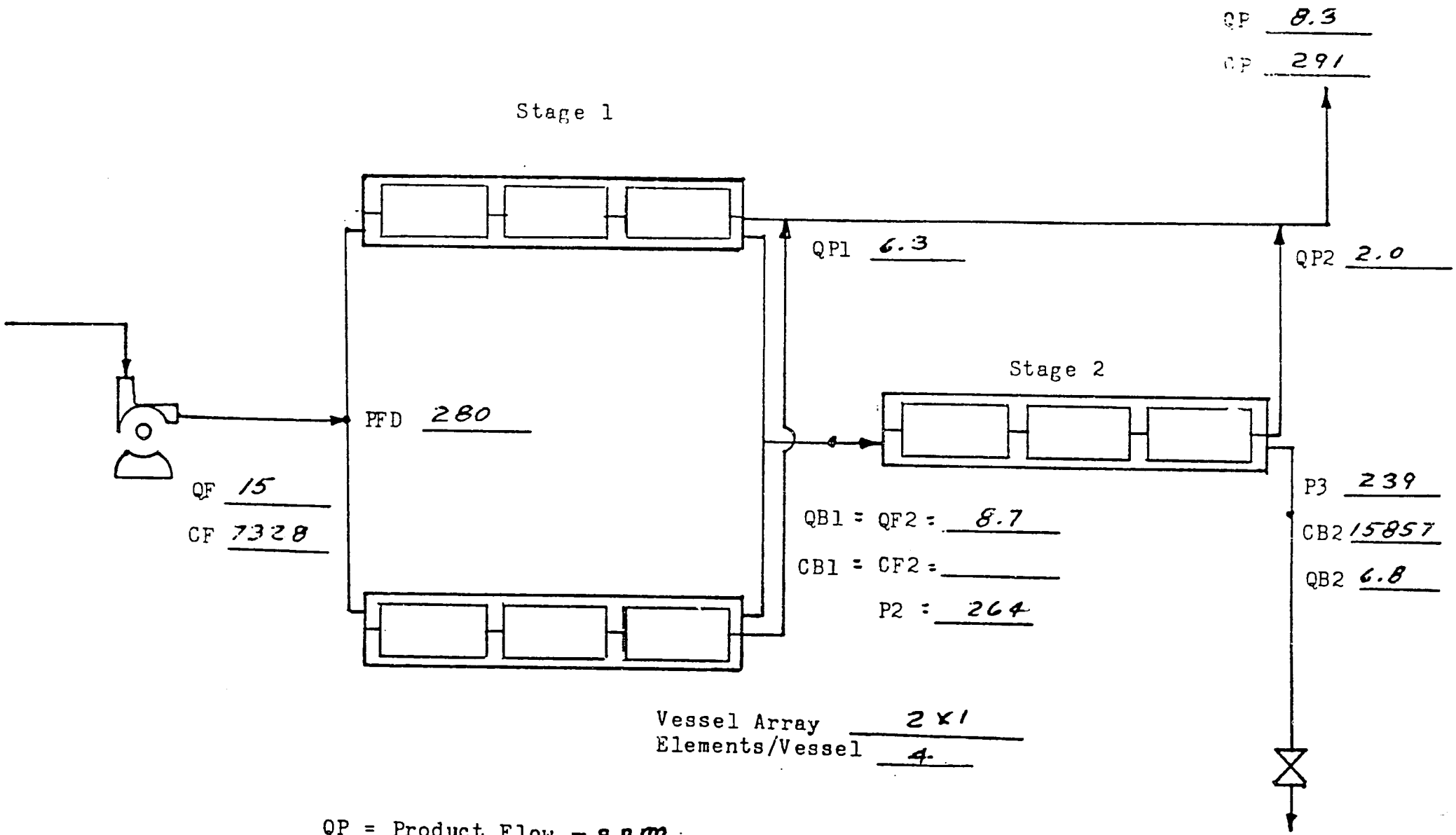

QP = Product Flow – gpm

QF = Feed Flow – "

QB = Brine Flow – "

C = Salt Concentration – Mg/ℓ

P = Pressure – psi

Fig. 9

Reverse Osmosis Power Consumption

	24 Hr. Day						8 Hr. Day						
	1 TDS	Press.	3 Qp	4 BHP	5 HP	6 KW	7 Qp	8 BHP	9 HP	10 KW	11	KWH/Kgal	KWH/m³
	Mg/l	psi	gpm										
	1018	180	2.8	.7	.778	.58	5.4	2.1	2.33	1.74		3.38	.89
	7328	290	2.8	1.134	1.26	.94						5.45	1.44
		280					8.3	3.2	3.55	2.65		5.26	1.39
	11750	365	2.7	1.38	1.53	1.14	8.1	4.14	4.59	3.42		6.86	1.81

Notes:

1. A positive displacement pump will be used, having a pump efficiency of 90% and a motor efficiency of 92%.

2. Qp = Product Flow

Figure 10

Reverse Osmosis Power
vs.
TDS

Figure 11

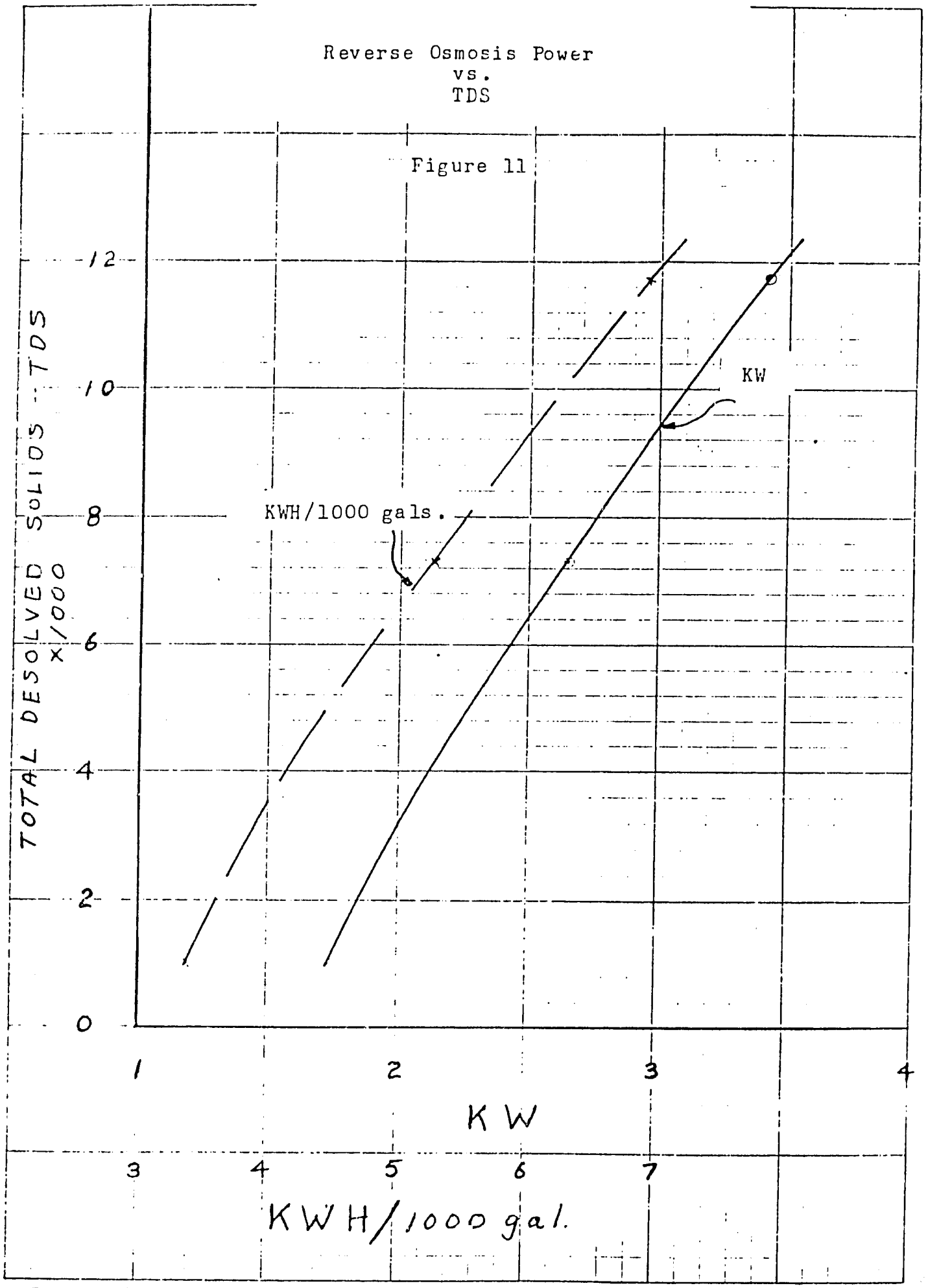

KEUFFEL & ESSER CO.

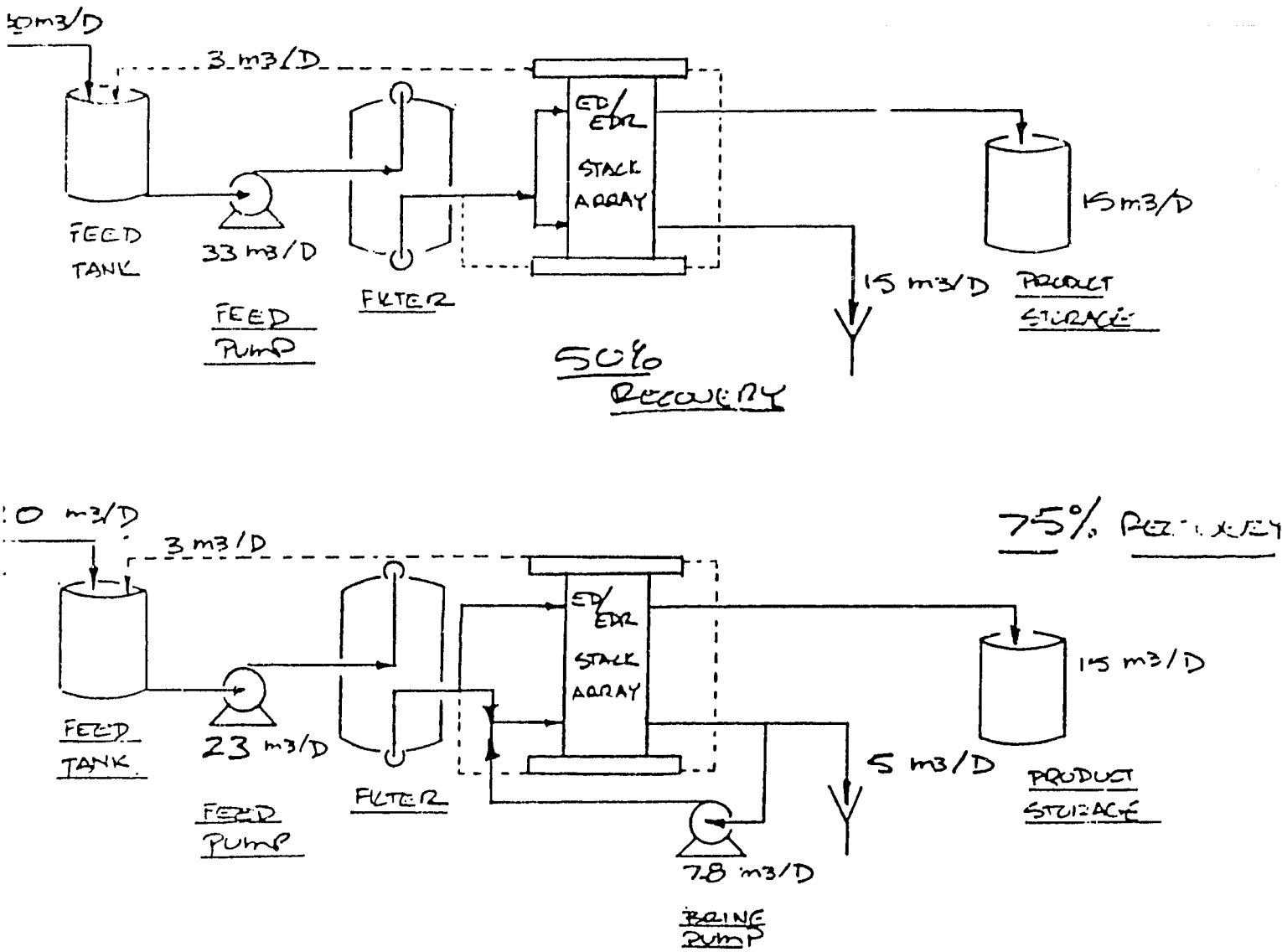

Figure 12
EDR 50% AND
75% RECOVERY SYSTEMS

Sketched in Figure 1 you will find block diagrams of a typical 50% and increased recovery EDR system. The example used for the enhanced recovery case is the 75% recovery, 6957 ppm feed case.

IONICS

PROJECT SOLAR ED/EDR

SUBJECT

FILE NUMBER M3-21054
SHEET NUMBER 1 OF 1
DATE 19 MAY '86
COMPUTED BY
CHECKED BY

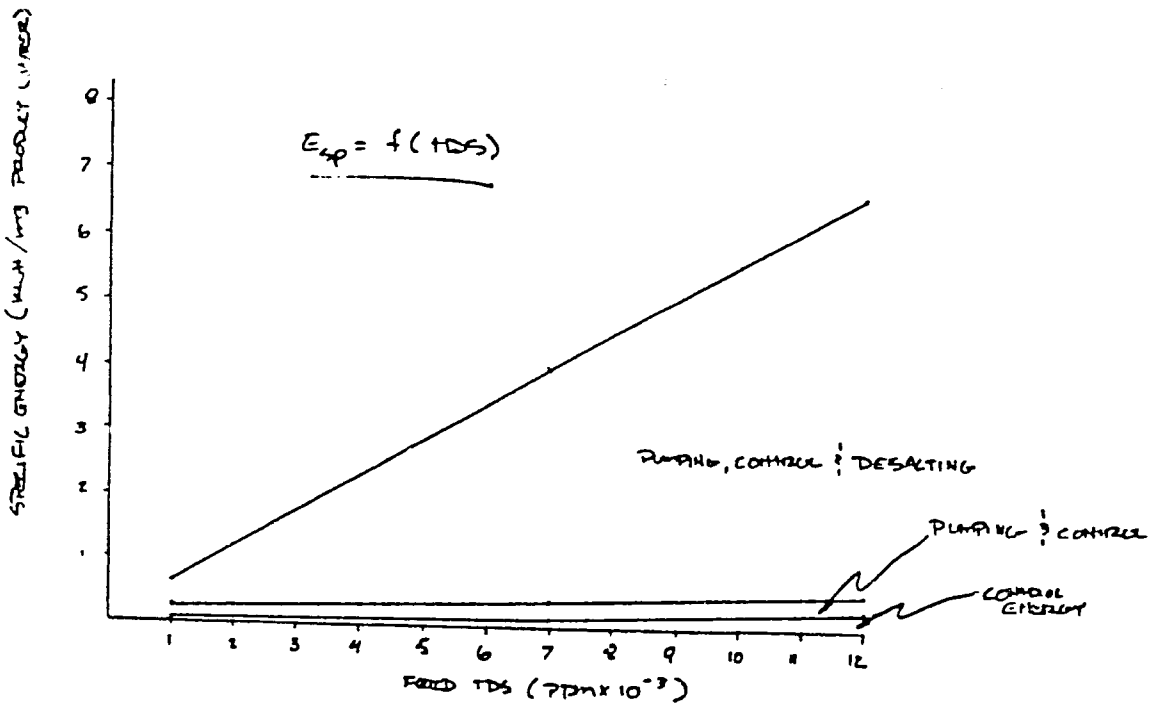

FIGURE 2 - EFFECT OF FEED CONCENTRATION ON TOTAL SPECIFIC ENERGY IN ELECTRODIALYSIS SYSTEM.

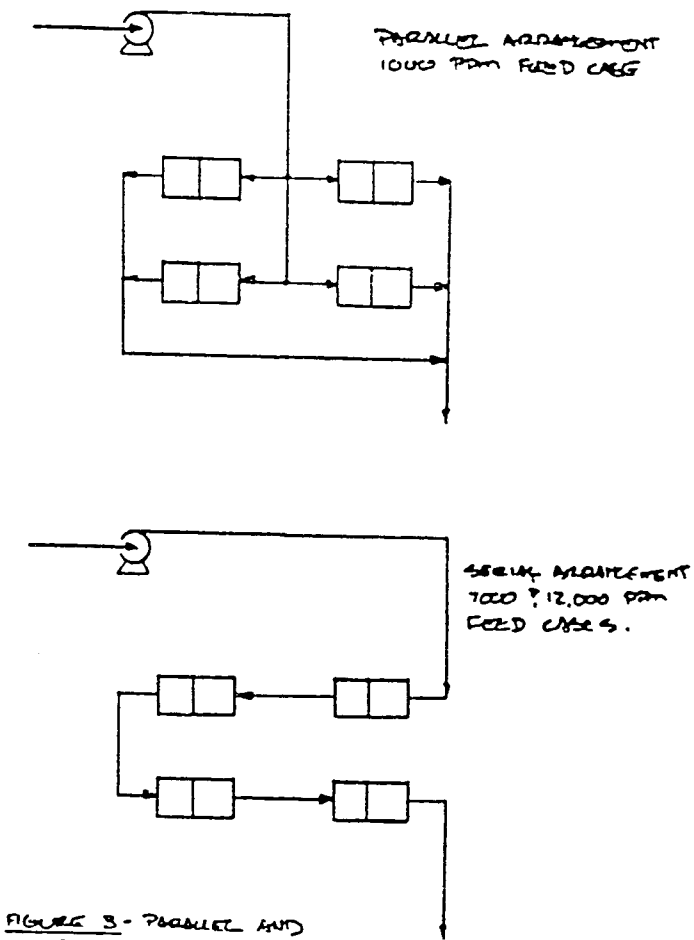

FIGURE 3 - PARALLEL AND SERIAL ARRANGEMENT OF MEMBRANE STACK ARRAY.

Figure 13

19 MAY '86

TABLE I
WATER ANALYSES
6957 PPM FEED

	Feed	Product	Brine (50%)	Brine (75%)
Na	1,900	154	3,659	7,198
Ca	168	4	330	654
Mg	288	9	562	1,110
K	90	6	175	345
Cl	3,364	219	6,509	12,829
SO_4	842	27	1,639	3,239
HCO_3	305	66	567	1,097
TDS	6,957	485	13,441	26,472
pH	7.6	7.3	7.9	7.9

TABLE II
WATER ANALYSES
1000 PPM FEED

	Feed	Product	Brine (50%)	Brine (85%)
Na	274	154	407	1,049
Ca	24	4	40	8
Mg	42	9	65	15
K	12	6	20	5
Cl	484	219	743	211
SO_4	121	27	190	523
HCO_3	43	66	51	49
TDS	1,000	485	1,516	3,978
pH	7.6	7.5	7.7	7.7

Concentrations are ppm as the ion.

TABLE III
WATER ANALYSES
12,000 PPM FEED

	Feed	Product	Brine (50%)
Na	3,278	154	6,398
Ca	289	4	571
Mg	496	9	976
K	155	6	305
Cl	5,803	219	11,362
SO_4	1,453	27	2,855
HCO_3	526	66	1,003
TDS	12,000	485	23,470
pH	6		

Concentrations are ppm as the ion.

TABLE IV
POWER AND SPECIFIC ENERGY SUMMARY

Case	I	II	III	IV	V
Feed TDS (PPM)	1,000	1,000	6,975	6,975	12,000
Recovery (%)	50	85	50	75	50
Flow (M3 per 8 hour day)	100	100	15	15	9
Energy (KWH per 8 hour day)	60	60	60	60	60
Power (KW)					
Pumping	2.8	2.8	.42	.42	.25
Control	.25	.25	.25	.25	.25
Desalting	4.45	4.45	6.83	6.83	7.00
Total Power(KW)	7.5	7.5	7.5	7.5	7.5
Specific Energy (KWH per Kgal of Product Water)	2.3	2.3	15.1	15.1	25.25
(KWH per M3 of Product Water)	61	61	4.0	4.0	6.7

Assumptions:

Pump Efficiency = 50%
Motor Efficiency = 85%
SP.GR = 1.00

APPENDIX

IONICS, INCORPORATED
65 Grove Street, Watertown, Massachusetts 02172 U.S.A.
Telephone (617) 926-2500 Telex 922473

May 19, 1986

R.Q. Associates
P.O. Box 1205
Teaneck, N.J. 07666

File: M3-21054-Solar

Dear Bob,

The following is in response to your request that Ionics calculate nominal power and specific energy values for desalting Kasar Ext. 3 water in Egypt via Electrodialysis Reversal (EDR), and has been written with the guidance of Jerry Lundstrom. The basis for all calculations was a desired product water concentration of less than 500 ppm TDS. The feed water analysis with which we started follows. This is the analysis received from you during our telephone conversation on Tuesday, 29 April, 1986.

ph 7.6 Conductivity 10,900 micro Scm^{-1}
TDS 6,540

Alkalinity	250	ppm as $CaCO_3$
TH	1,620	" " "
Ca	420	" " "
Mg	1,200	" " "
Cl	5,052	" " "
SO_4	877	" " "
Na	4,130	" " "
K	115	" " "

As we discussed, there are certain properties of this water which have not been defined, and which will certainly become important considerations for both EDR and reverse osmosis (RO) designs such as:

- Dissolved and Colloidal Silica Content
- BOD, COD, and TOC
- Turbidity
- Silt Density Index
- Zeta Potential
- Color
- Temperature
- Heavy Metals

The base case used for the design performance projections was the feedwater as previously shown. The ionic make up of this water did not chemically balance (heavy in anions) and was adjusted by derating the chloride level to 4,738 ppm as $CaCO_3$. This yielded the feed water analysis (6,957 ppm) as shown in Table I. Included in Table I are the expected product water (485 ppm), and brine waste analyses at both 50% and 75% recovery. Please note that no acid addition is required for EDR due to its ability to operate at elevated Langelier Saturation Indexes (LSI) up to positive 2.25. This obviates the need for acid injection, and eliminates the costs associated with dosing equipment. Product and waste pH's are very close to feed water pH, assuring that all streams will be non-corrosive to existing pipes and conduits, and eliminating the need for waste neutralization. Please note also that no sequesterant addition allowances need be made for EDR due to its proven ability to operate at $CaSO_4$ (gypsum) supersaturation values up to 175% without sequesterant addition. For you information, values up to 430% $CaSO_4$ supersaturation have been achieved with sequesterant addition in EDR.

As you indicated in our discussions, the feed water was reported to seasonally vary in composition from 1,000 ppm to 12,000 ppm. The feed water analysis found in Table I was thus linearly factored down to 1,000 ppm (Table II) and linearly factored up to 12,000 ppm (Table III). It was assumed throughout these calculations that the desalting component of the EDR system, the membrane "stacks", will be invariant for all design cases, allowing the user the capability of running any feed water concentration without having to change any of the system's components. Plese note also that EDR operating pressure will be low (less than 350 KPa) because water flows over, rather than through the EDR membranes. This makes pump pressure, and resultant pumping specific energy minimal and independent of feed water salinity. In fact, EDR is particularly well suited for solar applications because the system self-corrects for sun intensity. As sun intensity increases, the DC pump motors increase the flow rate, and the DC stack desalting available power increases, giving more product water at a constant product water salinity of 485 ppm. Because centrifugal pumps will be used, this ability to move along the pump curve will be possible. Since pressure need not increase, the relationship between stack power and flow rate remains linear, and the system adjusts itself. The recovery of the system may be adjusted from 50% to 85% merely by turning a valve.

In Table II, the 1,000 ppm feed water case is reviewed. In this case, the recovery was based at 50% and 85%. Again, 485 ppm product water is easily obtained.

Finally, in Table III, the 12,000 ppm feed water case is shown. Enhanced recovery is not considered in this case primarily because we feel that the extrapolation to 12,000 ppm is, at best, questionable, and a more valid feed water analysis is requested in order to calculate higher recovery designs on this case.

The multimedia filter will be the only pretreatment required for EDR. In general, the quality of water delivered to the EDR membrane stack for desalination needs little pretreatment, and may be summarized as;

Silt Density Index - 15 minutes	Up to 6
Turbidity	Up to 2 NTU
Silica	No Upper Limit
Mn	.1 ppm
Fe	.3 ppm

Please note that in addition to the ability of EDR to run at elevated supersaturation values of $CaCO_3$ (Langelier Index) and $CaSO_4$ concentrations, dissolved silica is not concentrated in EDR. Thus, recovery is independent of feed water silica content, and the danger of silica scaling of EDR membranes does not exist.

Also in each case, please note that the electrode stream rinse water has been recirculated to the feed tank to reduce waste volume. This water undergoes no TDS change and is equivalent to feed water in concentration and pH.

In the case of the enhanced recovery system, a pump has been used to return a portion of the brine waste to the EDR membrane stack array for further concentration. Total specific pumping energy actually decreases slightly since the recirculation water need not be refiltered, and thus need only be pumped to about 240 KPa. The system configuration will most likely consist of a built in brine pump which will be by-passed for 50% recovery operation, and which may be used should higher recoveries be desired.

In Table IV you will find power and specific energy figures for the feed water cases given. Specific energy is defined to be Kilowatt hours of energy per volume (either Kgal or M3) of desalted water produced. Pump and motor efficiencies were considered worst case at 50% and 85% respectively. Control power (.25 KW) is also conservative and will most probably be held to about .12 KW. In evaluating these numbers, please keep in mind the ability of EDR to move along the power curve to most effectively deliver a given quality desalted product water regardless of sun intensity. Also, as you are most probably aware, a good deal of modeling has been done using a diesel/PV (phovoltaic) hybrid system which has several benefits over both conventional diesel, and PV systems when incorporated with EDR. Hybrid systems offer the ability to run up to 24 hours a day. Thus, equipment for desalting, and the PV array may be sized smaller, with associated equipment cost savings.

As you will note in Table IV the basis for all calculations is a constant system power draw for all cases. This is acheieved by taking advantage of the flexibility inherent to ED/EDR systems in choosing between parallel and serial staging. In figure 3 you will find a simple schematic representation of the two flow schemes. Each membrane stack contains one electrical stage and two hydraulic stages. The parallel staging scheme will be used for the 1,000 ppm feed case, since only about a 50% reduction is required. This method will produce 100 M3 of product water per 8 hour day. If less product water is required, one or more stacks may be turned off.

A serial arrangement of membrane stacks will be used for the 6,975 ppm and 12,000 ppm feed cases (93% and 96% reduction respectively). 15 M3/D will be produced from the 6,975 ppm case and 9 M3/D will be produced from the 12,000 ppm case. In all cases, it is assumed that by day, we mean an 8 hour day, since we wish to design a realistic solar powered system. The energy requirement for all cases is 60 KWH per 8 hour day, or an average power of 7.5 KW for total power.

Finally, in Figure 2 you will find a simplified graph representing total specific energy (KWH per M3 of product water) as a function of feed water TDS (ppm). It may be seen from this graph the relationship between the three power components of an Electrodialysis desalination system; control power, pumping power and desalting power. The specific energy values corresponding to these power requirements have been represented in this figure.

The control energy line is not perfectly flat since control power is constant at .25 KW, while flow decreases as feed TDS increases. The pumping energy line is parallel to the control energy line. Desalting power increases with feed TDS, and is fairly linear with respect to feed concentration.

It is evident that some questions remain, specifically the nature and quantity of the balance of feed water constituents which are unknown, and actual analyses at both the high and low salinity extremes. If I may be of further assistance, please do not hestitate to contact me directly. Also, I suggest that you speak with Jerry Lundstrom directly regarding some of the finer points in combining renewable energy sources with EDR desalination.

Sincerely,

Bruce M. Dawson
Ionics, Incorporated

BMD/kmd
cc: AWP, JEL, FHM, JRE

TABLE I
WATER ANALYSES
6957 PPM FEED

	Feed	Product	Brine (50%)	Brine (75%)
Na	1,900	154	3,659	7,198
Ca	168	4	330	654
Mg	288	9	562	1,110
K	90	6	175	345
Cl	3,364	219	6,509	12,829
SO_4	842	27	1,639	3,239
HCO_3	305	66	567	1,097
TDS	6,957	485	13,441	26,472
pH	7.6	7.3	7.9	7.9

TABLE II
WATER ANALYSES
1000 PPM FEED

	Feed	Product	Brine (50%)	Brine (85%)
Na	274	154	407	1,049
Ca	24	4	40	8
Mg	42	9	65	15
K	12	6	20	5
Cl	484	219	743	211
SO_4	121	27	190	523
HCO_3	43	66	51	49
TDS	1,000	485	1,516	3,978
pH	7.6	7.5	7.7	7.7

Concentrations are ppm as the ion.

TABLE III
WATER ANALYSES
12,000 PPM FEED

	Feed	Product	Brine (50%)
Na	3,278	154	6,398
Ca	289	4	571
Mg	496	9	976
K	155	6	305
Cl	5,803	219	11,362
SO_4	1,453	27	2,855
HCO_3	526	66	1,003
TDS	12,000	485	23,470
pH	7.6		

Concentrations are ppm as the ion.

TABLE IV
POWER AND SPECIFIC ENERGY SUMMARY

Case	I	II	III	IV	V
Feed TDS (PPM)	1,000	1,000	6,975	6,975	12,000
Recovery (%)	50	85	50	75	50
Flow (M3 per 8 hour day)	100	100	15	15	9
Energy (KWH per 8 hour day)	60	60	60	60	60
Power (KW)					
Pumping	2.8	2.8	.42	.42	.25
Control	.25	.25	.25	.25	.25
Desalting	4.45	4.45	6.83	6.83	7.00
Total Power(KW)	7.5	7.5	7.5	7.5	7.5
Specific Energy (KWH per Kgal of Product Water)	2.3	2.3	15.1	15.1	25.25
(KWH per M3 of Product Water)	.61	.61	4.0	4.0	6.7

Assumptions:
- Pump Efficiency = 50%
- Motor Efficiency = 85%
- SP.GR = 1.00

IONICS

PROJECT SOLAR ED/EDR

SUBJECT

FILE NUMBER M3-71054
SHEET NUMBER 1 OF 1
DATE 19 MAY '76
COMPUTED BY
CHECKED BY

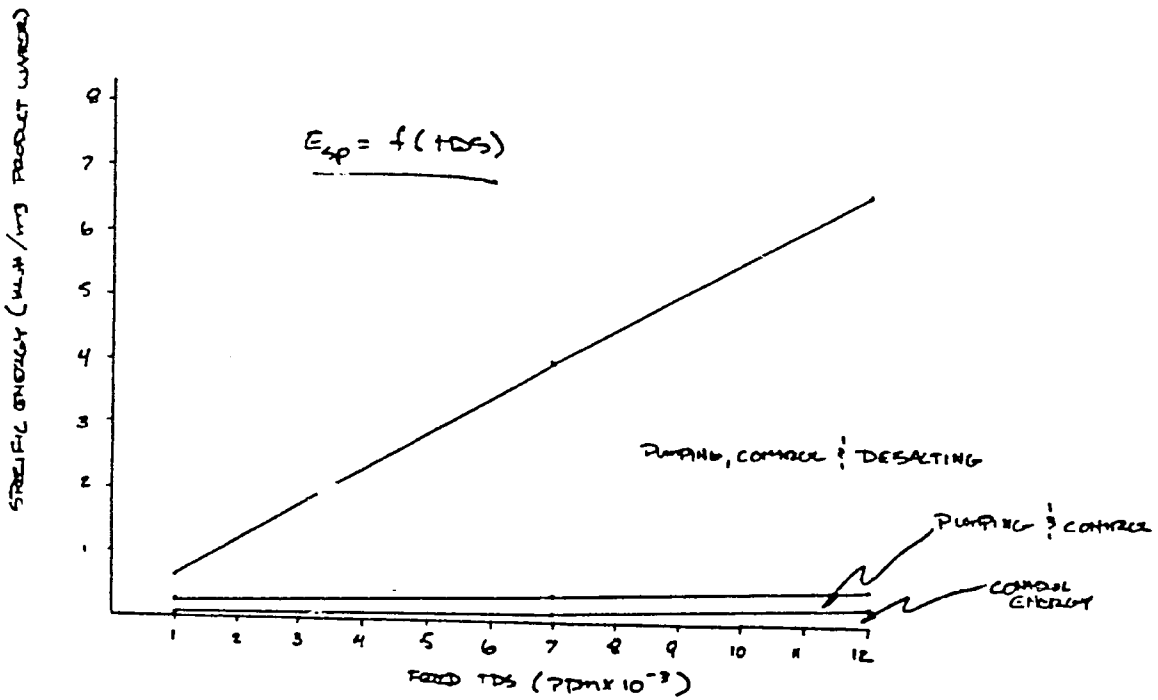

FIGURE 2 - EFFECT OF FEED CONCENTRATION ON TOTAL SPECIFIC ENERGY IN ELECTRODIALYSIS SYSTEM.

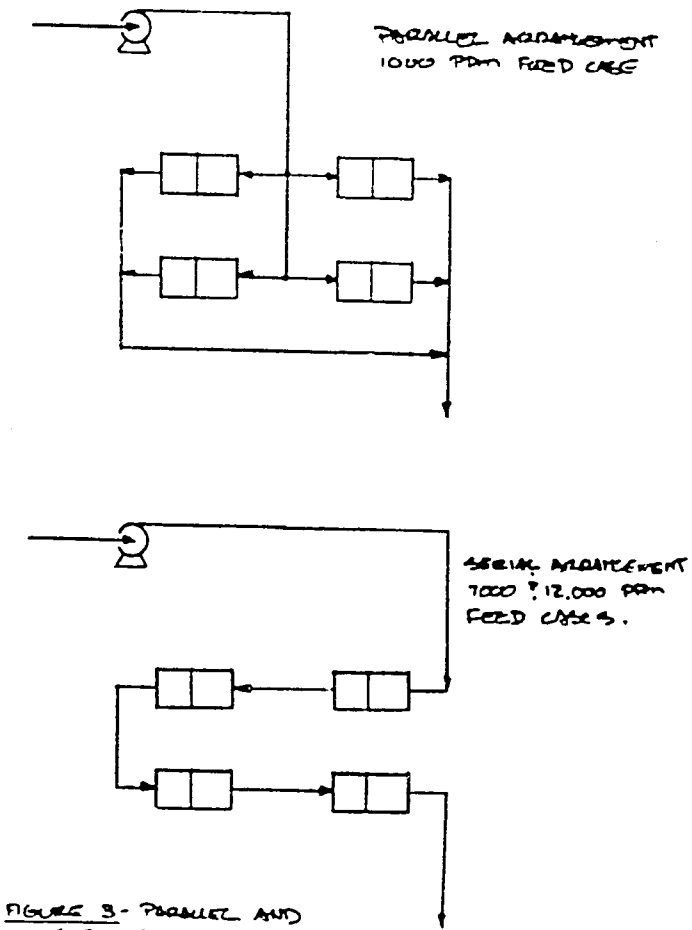

FIGURE 3 - PARALLEL AND SERIAL ARRANGEMENT OF MEMBRANE STACK ARRAY.

19 MAY '76

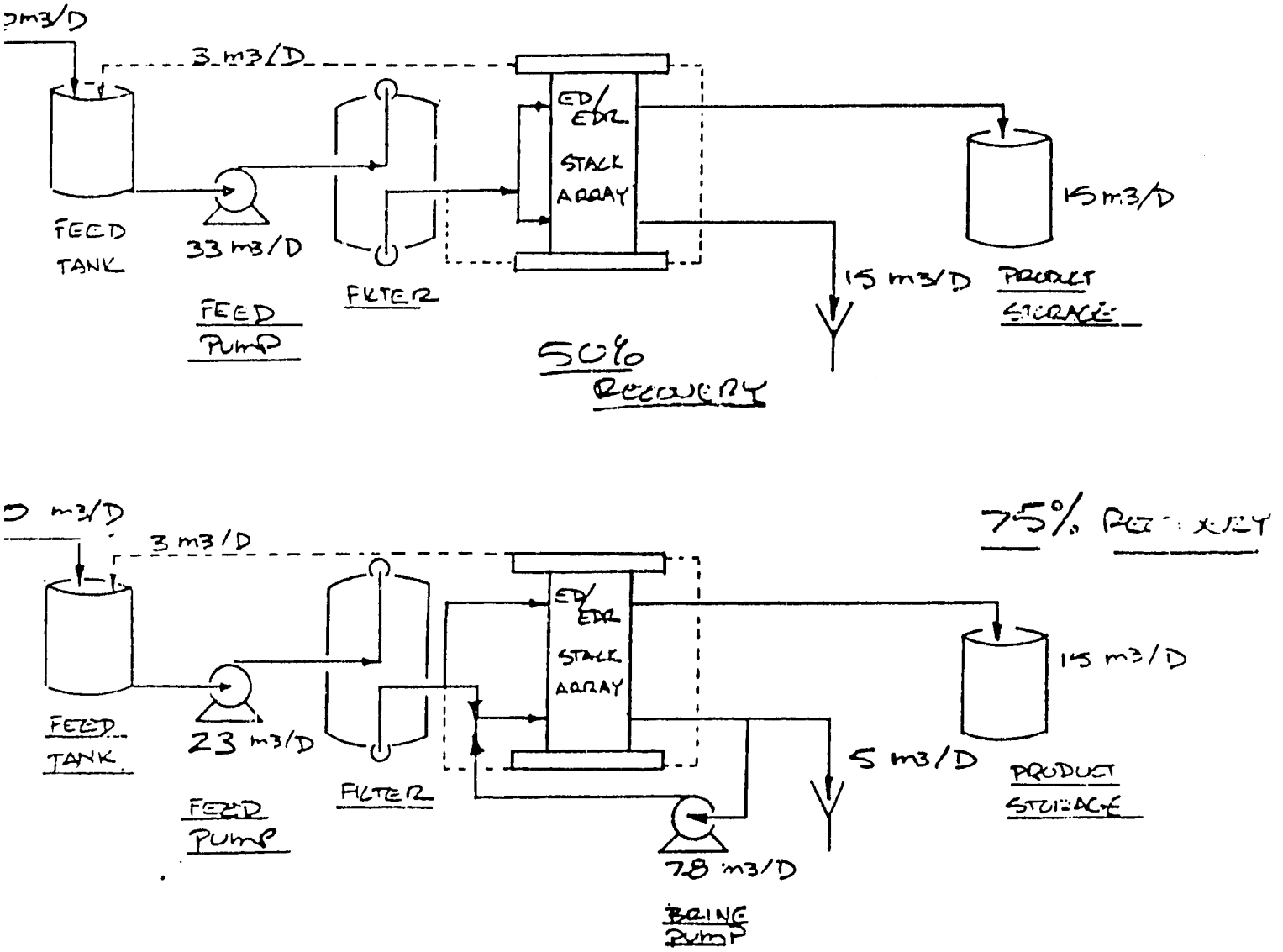

FIGURE 1
EDR 50% AND
75% RECOVERY SYSTEMS

Sketched in Figure 1 you will find block diagrams of a typical 50% and increased recovery EDR system. The example used for the enhanced recovery case is the 75% recovery, 6957 ppm feed case.

APPENDIX F

RQ CORRESPONDENCE ON

FIELD TEST #8

RQ Associates Consultants
P.O. Box 1205 Teaneck, N.J. 07666 201-692-1640

February 23, 1987

Mr. James Hoelscher
Meridian Corp.
5113 Leesburg Pike
Suite 700
Falls Church, VA 22041

Field Test #8 at El Kasr
Reverse Osmosis Redesign

Dear Jim:

The redesign of the Field Test #8 Reverse Osmosis system will be based on increasing the capacity to 25 Cu.M. per day. In addition, a Sea Water system will be designed as an alternate source of treated water or as a supplement to the Brackish system. The design will be based on 24-hr operation, but a sample design demonstrating the effects of 8-hr operation will be prepared.

Option #1

The base line Brackish system will produce 25 Cu.M. per day when treating water with a TDS range of approximately 1000 mg/l to 12000 mg/l. The system will operate with a uniform recovery of 55%, and the feed pressure will be varied to accommodate the varying TDS level.

1. Figure 1 shows that pretreatment of a 1018 mg/l feed water to prevent scaling is not required.

2. Figure 2 describes a system to treat feed water containing 1018 mg.l. The system consists of a single pressure vessel having six FilmTec (FT) BW4040 elements and operating with an initial feed pressure of 185 PSI (13 KGR/SQ.CM).

3. Figure 3 shows the necessary pretreatment of a 7328 mg/l feed water to prevent scaling.

4. Figure 4 describes a system to treat feed water containing 7328 mg/l TDS. The system configuration is the same as Figure 2 but has an initial feed pressure of 303 PSI (21 KGR/SQ.CM). The treated effluent has a TDS of approximately 300 mg/l.

5. Figure 5 describes a system to treat a feed water containing 11861 mg/l TDS. The system configuration is the same as Figure 2, but requires an initial feed pressure of 384 PSI (27 KGR/SQ.CM) and has a treated effluent TDS of 475 mg/l. The BHP is 2.57.

6. Figure 6 shows the necessary pretreatment of an 11861 mg/l feed water to prevent scaling.

Figures 1 to 6 describe a system that can produce the desired quantity and quality of treated effluent over a feed TDS range of 1000 to 12000 mg/l. The system will require a pump capable of pumping 1.9 Cu.M. per hr at pressures in excess of 32 Kgr./SQ.Cm. The pump will always operate at its maximum pressure and rated output.

At the lower TDS levels the excess pressure will be dissipated across the pump discharge throttle valve.

A Reverse Osmosis system is generally designed around the selected membrane; however, if broad enough operating parameters are acceptable, then alternate membranes may be used.

Figure 7 and Figure 8 describe systems treating feed water containing 7328 and 11861 mg/l TDS respectively and employing FLUID SYSTEMS (FS) 4021LF membrane elements. The FS elements not having as good a salt rejection as the FT elements, operate at lower recoveries and higher pressures. This results in higher power consumption for the FS units than the FT systems (4,47 BHP and 2.58 BHP respectively).

Option #2

Sea Water is an alternate source of supply for Field Test #8 at El Kasr. A stand-alone sea water unit capable of producing 25 Cu.M. per day of 500 mg/l or less product water can be designed as follows:.

1. Figure 9 describes a system producing the desired quantity and quality of treated water directly from East Mediterranean sea water. The system uses FilmTec SWHR4040 elements and consists of 2 pressure vessels in parallel, each having 6 elements (See Sketch #2). The system has a recovery of 40% and an operating pressure of 889 PSI (62 KGR./SQ.CM). Power consumption is 6.9 BHP.

2. Figure 10 is similar to figure 9, except that it uses Fluid Systems' 1021SS elements. The FS elements do not have as high a salt rejection as the FT elements and therefore must operate at higher pressures. The higher pressure produces a greater output per element and therefore the FS system uses 5 elements per vessel. The power requirements, because of the higher pressure are 7.38 BHP, compared to the FT systems' 6.9 BHP. If this power difference is not a problem, then the FS elements are an acceptable alternate.

This Sea Water unit can be used as an alternate to the Brackish system or as a supplemental source of potable water. Another option for the treatment of Sea Water is as follows:

Option #3

The option #2 Sea Water system would be installed along with the option #1 Brackish system and either one would be operated depending upon the condition of the Roman Wells. The maximum power required by this arrangement would be 6.9 BHP (option #2 power)

The following sytem would integrate the Brackish and Sea Water requirements:

1. Figure 11 describes a system operating at a maximum recovery of 50%, a low pressure of (60 KGR./SQ.CM), and pr[illegible] 21 Cu.M. per day with an effluent quality of approximately [illegible] mg/l TDS. The system consists of 4 pressure vessels, each [illegible]taining 6 FilmTec SW4040 elements (See Sketch #3). The treated effluent is sent to the Brackish system Figure 12 (Same as Option 1, Figures 1 to 6). The total power consumption of this configuration (Figure 11 followed by Figure 5) is 9.21 BHP.

Option #4

A more energy efficient integrated system is the following:

1. Figure 13 describes a Brackish system that will be more energy efficient when treating the 2000 mg/l effluent from Figure 11. The system consists of 2 pressure vessels in series, each containing 6 FilmTec BW4040 elements. The system operates at a recovery of 80% and a maximum pressure of 13 KGR./SQ.CM. The power consumption of Figure 13 alone is .72 BHP and the total power of the integrated system (Figure 11 plus Figure 13) is 7.36 BHP.

Figure 13 (Sketch #4) consists of adding a second pump (P-2) to Sketch #1 (Figures 1 to 6, and 12), which will have a rated flow of 1.3 Cu.M. per hr and a discharge pressure of at least 11 KGR./SQ.M.). In addition, a second pressure vessel (V-2) is added in series with the first vessel (V-1). The additional pump and vessel are valved to permit their operation when treating the 2000 mg/l effluent from Figure 11 (Sketch #4). When the system is using the Roman Wells, only Pump P-1 and Vessel V-1 will be operational.

Solar-Brackish/Seawater System Costs

	Figure 5	Figure 9	Figure 11	Figure 13
Vessels	800	1600	3200	1600
Elements	4800	9600	19200	9600
Pumps	2800	3000	3000	4300
Micron Filters	1000	1000	1000	1000
Assembly	3000	3000	3000	3000
Media Filter	1000	1000	1000	1000
Total Costs	13400	17600	30400	20500
Price @ 50% Profit	26800	35200	60800	41000

System Comparison

	Power (BHP)	Capital Cost
Option #1 (Fig.5)	2.57	26800
Option #2 (Fig.9)	6.92	35200
Option #1 + Option #2	6.92	62000
Option #3 (Fig.11 + Fig.5)	9.21	87600
Option #4 (Fig.11 + Fig.13)	7.36	101800

Summary

Option #1 is the brackish system capable of producing 25 Cu.M./day of potable water, over a TDS range of 1000 mg/l to [illegible] mg/l when operating on the Roman Wells. As expected, it has the lowest power and capital requirements (See Fig.1 to 6 and Fig.11).

Option #2 is the Sea Water system capable of producing 25 Cu.M./day of potable water when operating on the Eastern Mediterranean (38400 mg/l TDS).

If you wish to operate independently on the Roman Wells or Eastern Mediterranean Sea Water, you must install both Options #1 and #2. The maximum power requirement of 6.92 BHP will be for the Sea Water system (Option #2). The capital cost as indicated will be $62000.

Option #3 is an integrated system with the Sea Water unit producing 31 Cu.M./day of approximatly 2000 mg/l product water which is further treated in the Option #1 Brackish system. This system has the highest power requirement (9.21 BHP) and the second highest capital cost.

Option #4 is a more energy efficient system, in which the 2000 TDS Sea Water system effluent is treated in a Brackish system operating at 80% recovery. The Brackish system permits operation on the Roman Wells at a recovery of 55%, and on the Sea Water effluent at the 80% recovery. The power requirement on the Roman Wells is the same as for Option #1 and when treating the Sea Water system effluent, the power is .719 BHP. As indicated the total Sea Water treatment power requirements are 7.36 BHP. The capital cost for this system is the highest ($101,800).

The high rejection of the Sea water membranes permits operation at a relatively high recovery while still making potable water. This negates some of the benefits of the integrated systems and therefore Option #3, with its high power and relatively high capital cost, is a questionable choice. Option #4 provides an integrated system with a lower power requirement but high capital cost.

The final choice depends upon the importance of an integrated system and the impact of the power variations on the design and cost of the solar units.

Sincerely yours

Robert M. Quinn

RQ/lm

SKETCH #1
Option #1 - Brackish
(Figures 1 to 6 and 12)

Qf=1.9 Cu.M./hr. Pf=13-32 Kgr/SQ.Cm Recovery=55% BHP=2.58
Qp=1.04 Cu.M/hr (25 Cu.M/day)

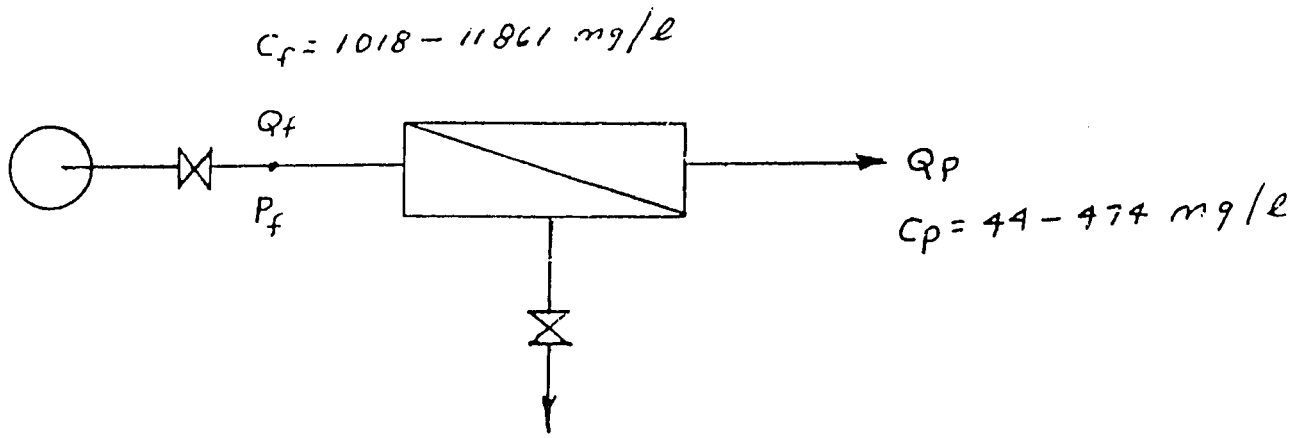

SKETCH #2
Option #2 - Sea Water
(Figure 9)

Qf=2.6 Cu.M./hr Pf=62 Kgr/SQ.Cm Recovery=40% BHP=6.92
Qp=1.04 Cu.M./hr (25 Cu.M./day)

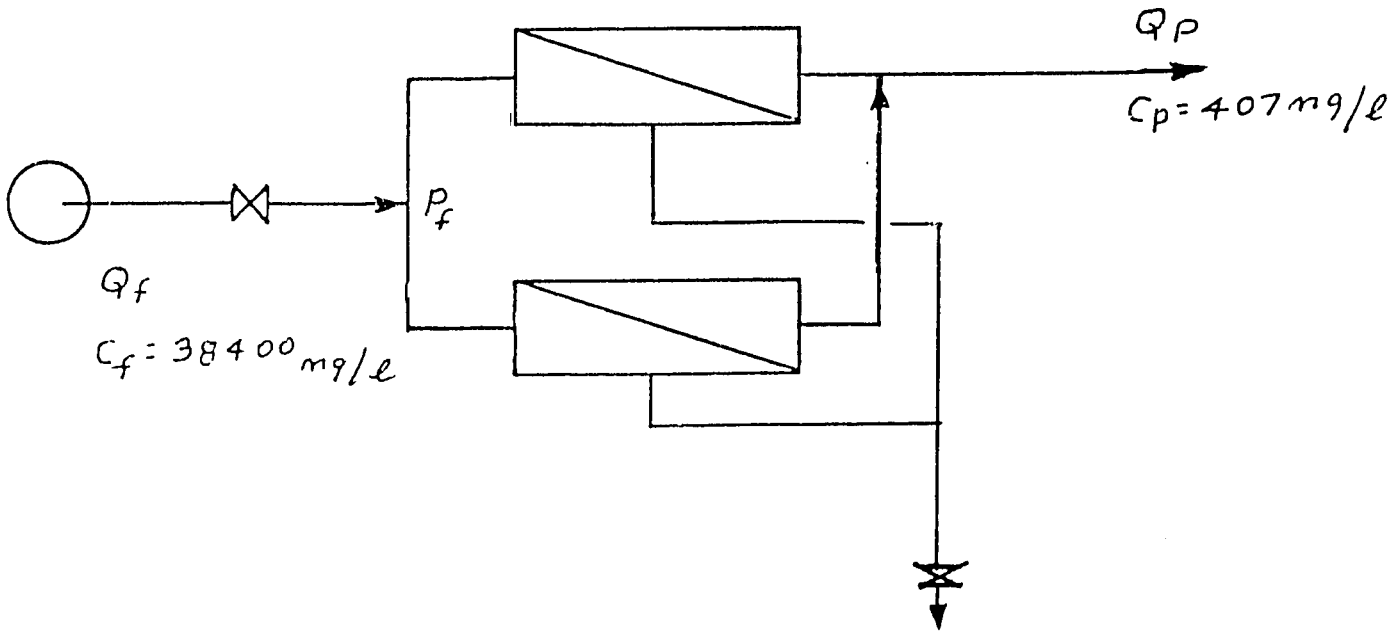

SKETCH #3
Option #3 - Sea Water
(Figure 11)

Qf=2.6 Cu.M./hr Pf=60 Kgr./SQ.Cm Recovery=50% BHP=6.64
Qp=1.3 Cu.M/hr (31 Cu.M/day)

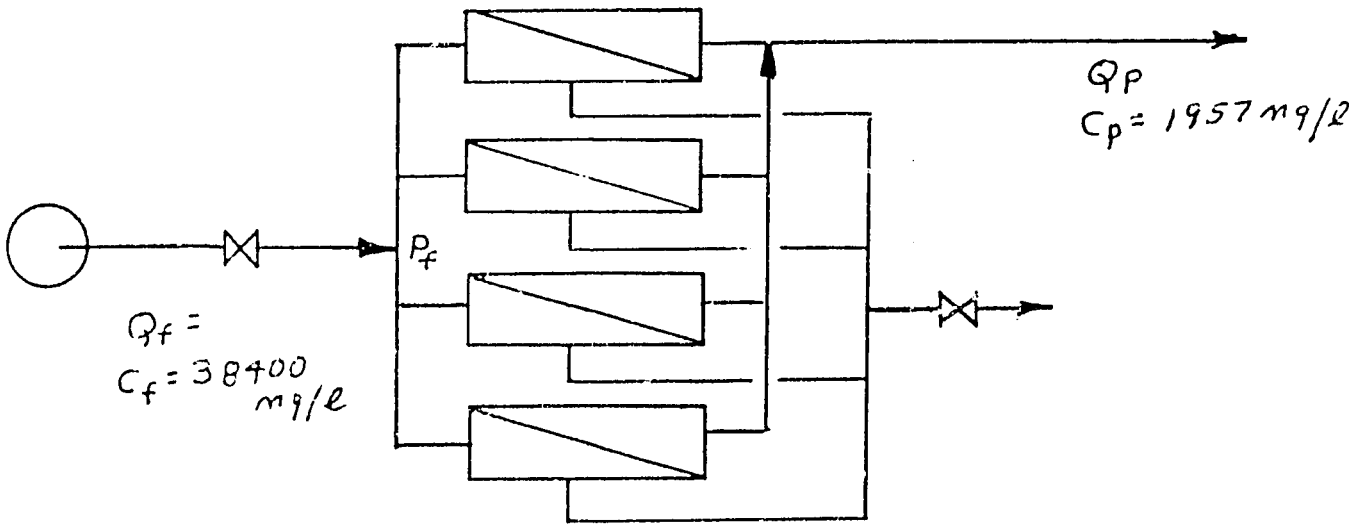

SKETCH #4
Option #4 - Brackish
(Figure 13)

Qf=1.3 Cu.M./hr Pf=11 Kg./SQ.Cm Recovery=80% BHP=.719
Qp=1.04 Cu.M./hr (25 Cu.M./day)

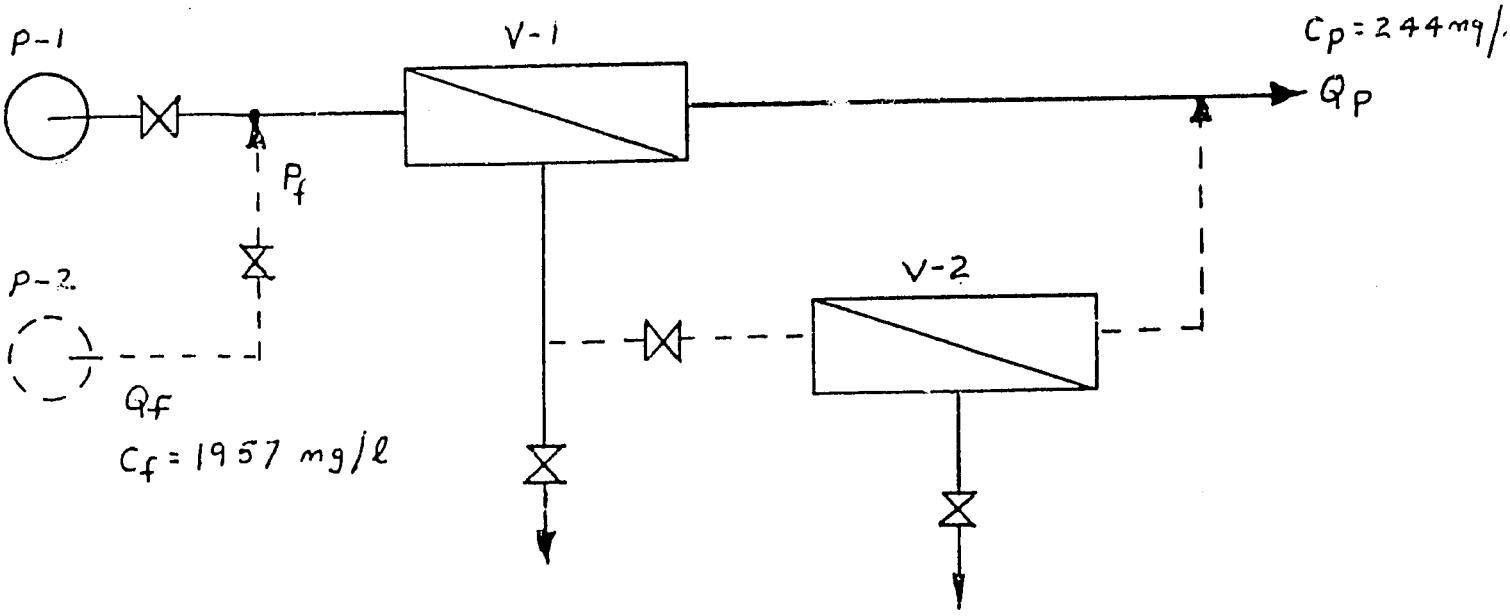

Fig. 1

BRACKISH REVERSE OSMOSIS PROCESS AND SYSTEM DESIGN

PRETREATMENT

NO CALCIUM CARBONATE SCALE
NO CALCIUM SULFATE SCALE
CaSO4 MAX. ALLOWABLE RECOVERY WITH 10 MG/L NaHMP OR 7 MG/L OF ANTISCALANT .97
NO SiO2 SCALE
SiO2 MAX. ALLOWABLE RECOVERY.00
NO STRONTIUM SULFATE SCALE
SrSO4 MAX. ALLOWABLE RECOVERY WITH 10 MG/L NaHMP OR 7 MG/L OF ANTISCALANT.97
NO BARIUM SULFATE SCALE
BaSO4 MAX. ALLOWABLE RECOVERY WITH 10 MG/L NaHMP OR 7 MG/L OF ANTISCALANT .97

WATER ANALYSIS

	FEED				BRINE	
	RAW		ACIDIFIED			
	ION	CaCO3	ION	CaCO3	ION	CaCO3
Ca	22.9	57.3	22.9	57.3	45.8	114.5
Mg	39.7	163.6	39.7	163.6	79.4	327.1
Na	286.7	622.2	286.7	622.2	573.4	1244.3
K	12.3	15.7	12.3	15.7	24.6	31.5
CATIONS		858.712				
HCO3	41.6	34.1	41.6	34.1	83.2	68.2
SO4	115.0	119.6	115.0	119.6	230.0	239.2
Cl	500.0	705.0	500.0	705.0	1000.0	1410.0
NO3	0.0	0.0	0.0	0.0	0.0	0.0
ANIONS		858.712				
CO2	1.7		1.7		1.7	
SiO2	0.0		0.0		0.0	
Fe	0.0		0.0		0.0	
F	0.0		0.0		0.0	
Ba	0.0		0.0		0.0	
Sr	0.0		0.0		0.0	
TDS	1018.207		1018.207		2036.414	
pH	7.6		7.6		7.9	
RECOVERY	50					
T	25					
SDI	0					
LSI	-.16271					
TIS	4.117087E-02					

Fig. 2

DESIGN SUMMARY

BY RO FOR ROA
DATE 02-19-1987
PRODUCT FLOW 4.6(1.0) GPM(CU.M./HR) 6627(25) GPD(CU.M./D)
RECOVERY 55 TEMPERATURE 25 C
MEMBRANE SYSTEM FT MODEL BW4040 6
MAX.OPER.PRESSURE 218(15) PSI(KGR./SQ.CM) NO. OF TRAINS 1
INITIAL PRESSURE 185(13) PSI(KGR/SQ.CM)

TRAIN CONFIGURATION

STAGE	VESSELS	FEED FLOW GPM(C.M/HR)	PRODUCT FLOW GPM(C.M/HR)	BRINE FLOW GPM(C.M/HR)	BRINE PRESSURE PSI(Kg/Sq.Cm)
1	1	8.4(1.9)	4.6(1.0)	3.8(0.9)	164.3(11.6)
SYSTEM	1	8.4(1.9)	4.6(1.0)	3.8(0.9)	

FINAL WATER ANALYSIS

	FEED RAW MG/L	FEED ACIDIFIED MG/L	BRINE MG/L	PRODUCT MG/L
Ca	22.9	22.9	50.2	0.6
Mg	39.7	39.7	86.7	1.2
Na	286.7	286.7	620.7	13.5
K	12.3	12.3	26.4	0.8
HCO3	41.6	41.6	89.0	2.8
SO4	115.0	115.0	252.0	2.9
Cl	500.0	500.0	1083.9	22.3
NO3	0.0	0.0	0.0	0.0
CO2	1.7	1.7	1.7	1.7
SiO2	0.0	0.0	0.0	0.0
Fe	0.0	0.0	0.0	0.0
F	0.0	0.0	0.0	0.0
Ba	0.0	0.0	0.0	0.0
Sr	0.0	0.0	0.0	0.0
TDS	1018.2	1018.2	2208.9	44.0

OPERATING pHFA 7.6
66 Be ACID - #/K GAL. FEED 0.00#/K GAL.PRODUCT 0.00
BRAKE HORSEPOWER = 1.249042
KWH/1000 GAL. OF PRODUCT = 3.761959

BRACKISH REVERSE OSMOSIS PROCESS AND SYSTEM DESIGN

Fig. 3

PRETREATMENT

ACID REQUIREMENTS
OPERATING pH= 6.30
66 be ACID - #/K GAL. FEED 1.11#/K GAL.PRODUCT 2.02
NO CALCIUM SULFATE SCALE
CaSO4 MAX. ALLOWABLE RECOVERY WITH 10 MG/L NaHMP OR 7 MG/L OF ANTISCALANT .79
NO SiO2 SCALE
SiO2 MAX. ALLOWABLE RECOVERY.00
NO STRONTIUM SULFATE SCALE
[illegible] MAX. ALLOWABLE RECOVERY WITH [illegible] MG/L NaHMP OR 7 MG/L OF ANTISCALANT .79
NO BARIUM SULFATE SCALE
BaSO4 MAX. ALLOWABLE RECOVERY WITH 10 MG/L NaHMP OR 7 MG/L OF ANTISCALANT .79

WATER ANALYSIS

	FEED				BRINE	
	RAW		ACIDIFIED			
	ION	CaCO3	ION	CaCO3	ION	CaCO3
Ca	168.0	420.0	168.0	420.0	373.3	933.3
Mg	291.0	1198.9	291.0	1198.9	646.7	2664.3
Na	2048.3	4444.7	2048.3	4444.7	4551.7	9877.2
K	90.0	115.2	90.0	115.2	200.0	256.0
CATIONS		6178.85				
HCO3	305.0	250.1	150.9	123.7	335.3	275.0
SO4	643.0	576.7	964.5	1003.1	2143.3	2229.1
Cl	3583.0	5052.0	3583.0	5052.0	7962.2	11226.7
NO3	0.0	0.0	0.0	0.0	0.0	0.0
ANIONS		6178.85				
CO2	12.5		123.7		123.7	
SiO2	0.0		0.0		0.0	
Fe	0.0		0.0		0.0	
F	0.0		0.0		0.0	
Ba	0.0		0.0		0.0	
Sr	0.0		0.0		0.0	
TDS	7328.263		7295.664		16285.03	
pH	7.6		6.3		6.6	
RECOVERY	55					
T	25					
SDI	0					
LSI	-.00034					
TIS	.3803664					

Fig. 4

DESIGN SUMMARY

BY RO FOR ROA
DATE 01-01-1980
PRODUCT FLOW 4.6(1.0) GPM(CU.M./HR) 6656(25) GPD(CU.M./D)
RECOVERY 55 TEMPERATURE 25 C
MEMBRANE SYSTEM FT MODEL BW4040 6
MAX.OPER.PRESSURE 356(25) PSI(KGR./SQ.CM) NO. OF TRAINS 1
INITIAL PRESSURE 303(21) PSI(KGR/SQ.CM)

TRAIN CONFIGURATION

STAGE	VESSELS	FEED FLOW GPM(C.M/HR)	PRODUCT FLOW GPM(C.M/HR)	BRINE FLOW GPM(C.M/HR)	BRINE PRESSURE PSI(Kg/Sq.Cm)
1	1	8.4(1.9)	4.6(1.0)	3.8(0.9)	282.2(19.8)
SYSTEM	1	8.4(1.9)	4.6(1.0)	3.8(0.9)	

FINAL WATER ANALYSIS

	FEED RAW MG/L	FEED ACIDIFIED MG/L	BRINE MG/L	PRODUCT MG/L
Ca	168.0	168.0	368.5	3.9
Mg	291.0	291.0	636.1	8.6
Na	2048.3	2048.3	4439.1	92.2
K	90.0	90.0	193.2	5.5
HCO3	305.0	150.9	323.3	9.8
SO4	843.0	964.5	2113.9	24.1
Cl	3583.0	3583.0	7772.1	155.6
NO3	0.0	0.0	0.0	0.0
CO2	12.5	123.7	123.7	123.7
SiO2	0.0	0.0	0.0	0.0
Fe	0.0	0.0	0.0	0.0
F	0.0	0.0	0.0	0.0
Ba	0.0	0.0	0.0	0.0
Sr	0.0	0.0	0.0	0.0
TDS	7328.3	7295.7	15846.2	299.8

OPERATING pHFA 6.3
66 Be ACID - #/K GAL. FEED 1.11#/K GAL.PRODUCT 2.02
BRAKE HORSEPOWER = 2.055507
KWH/1000 GAL. OF PRODUCT = 6.163825

DESIGN SUMMARY

Fig 5

BY RO FOR ROA
DATE 01-01-1980
PRODUCT FLOW 4.6(1.0) GPM(CU.M./HR) 6581(25) GPD(CU.M./D)
RECOVERY 55 TEMPERATURE 25 C
MEMBRANE SYSTEM FT MODEL BW4040 6
MAX.OPER.PRESSURE 452(32) PSI(KGR./SQ.CM) NO. OF TRAINS 1
INITIAL PRESSURE 384(27) PSI(KGR/SQ.CM)

TRAIN CONFIGURATION

STAGE	VESSELS	FEED FLOW GPM(C.M/HR)	PRODUCT FLOW GPM(C.M/HR)	BRINE FLOW GPM(C.M/HR)	BRINE PRESSURE PSI(Kg/Sq.Cm)
1	1	8.3(1.9)	4.6(1.0)	3.7(0.8)	363.7(25.6)
SYSTEM	1	8.3(1.9)	4.6(1.0)	3.7(0.8)	

FINAL WATER ANALYSIS

	FEED RAW MG/L	FEED ACIDIFIED MG/L	BRINE MG/L	PRODUCT MG/L
Ca	285.0	285.0	625.3	6.6
Mg	496.0	496.0	1084.4	14.6
Na	3245.0	3245.0	7034.9	144.2
K	153.0	153.0	328.6	9.3
HCO3	520.0	168.2	360.5	10.9
SO4	1437.0	1714.4	3757.8	42.5
Cl	5725.3	5725.3	12421.1	246.9
NO3	0.0	0.0	0.0	0.0
CO2	21.4	275.2	275.2	275.2
SiO2	0.0	0.0	0.0	0.0
Fe	0.0	0.0	0.0	0.0
F	0.0	0.0	0.0	0.0
Ba	0.0	0.0	0.0	0.0
Sr	0.0	0.0	0.0	0.0
TDS	11861.3	11786.9	25612.6	474.9

OPERATING pHFA 6.0
66 Be ACID - #/K GAL. FEED 2.54#/K GAL.PRODUCT 4.61
BRAKE HORSEPOWER = 2.576393
KWH/1000 GAL. OF PRODUCT = 7.813299

BRACKISH REVERSE OSMOSIS PROCESS AND SYSTEM DESIGN

Fig. 6

PRETREATMENT

ACID REQUIREMENTS
OPERATING pHFA 6.00
66 BE ACID - #/K GAL. FEED 2.540#/K GAL.PRODUCT 4.61
NO CALCIUM SULFATE SCALE
CaSO4 MAX. ALLOWABLE RECOVERY WITH 10 MG/L NaHMP OR 7 MG/L OF ANTISCALANT .64
NO SiO2 SCALE
SiO2 MAX. ALLOWABLE RECOVERY.00
NO STRONTIUM SULFATE SCALE
SrSO4 MAX. ALLOWABLE RECOVERY WITH 10 MG/L NaHMP OR 7 MG/L OF ANTISCALANT.64
NO BARIUM SULFATE SCALE
BaSO4 MAX. ALLOWABLE RECOVERY WITH 10 MG/L NaHMP OR 7 MG/L OF ANTISCALANT .64

WATER ANALYSIS

	FEED				BRINE	
	RAW		ACIDIFIED			
	ION	CaCO3	ION	CaCO3	ION	CaCO3
Ca	285.0	712.5	285.0	712.5	633.3	1583.3
Mg	496.0	2043.5	496.0	2043.5	1102.2	4541.2
Na	3245.0	7041.7	3245.0	7041.7	7211.1	15648.1
K	153.0	195.8	153.0	195.6	340.0	435.2
CATIONS		9993.51				
HCO3	520.0	426.4	168.2	137.9	373.8	306.5
SO4	1437.0	1494.5	1714.4	1782.9	3809.7	3962.1
Cl	5725.3	8072.6	5725.3	8072.6	12722.8	17939.2
NO3	0.0	0.0	0.0	0.0	0.0	0.0
ANIONS		9993.51				
CO2	21.4		275.2		275.2	
SiO2	0.0		0.0		0.0	
Fe	0.0		0.0		0.0	
F	0.0		0.0		0.0	
Ba	0.0		0.0		0.0	
Sr	0.0		0.0		0.0	
TDS	11861.27		11786.85		26358.38	
pH	7.6		6.0		6.3	
RECOVERY	55					
T	25					
SDI	0					
LSI	-.04672					
TIS	.6275711					

Fig. 7

DESIGN SUMMARY

BY RO FOR RDA
DATE 01-01-1980
PRODUCT FLOW 4.5(1.0) GPM(CU.M./HR) 6495(25) GPD(CU.M./D)
RECOVERY 40 TEMPERATURE 25 C
MEMBRANE SYSTEM FS MODEL BW4021LP 3
MAX.OPER.PRESSURE 578(41) PSI(KGR./SQ.CM) NO. OF TRAINS 1
INITIAL PRESSURE 445(31) PSI(KGR/SQ.CM)

TRAIN CONFIGURATION

STAGE	VESSELS	FEED FLOW GPM(C.M/HR)	PRODUCT FLOW GPM(C.M/HR)	BRINE FLOW GPM(C.M/HR)	BRINE PRESSURE PSI(Kg/Sq.Cm)
1	1	11.3(2.6)	4.5(1.0)	6.8(1.5)	416.9(29.3)
SYSTEM	1	11.3(2.6)	4.5(1.0)	6.8(1.5)	

FINAL WATER ANALYSIS

	FEED RAW MG/L	FEED ACIDIFIED MG/L	BRINE MG/L	PRODUCT MG/L
Ca	285.0	285.0	474.1	1.3
Mg	496.0	496.0	824.8	2.7
Na	3245.0	3245.0	5315.1	139.8
K	153.0	153.0	249.3	8.6
HCO3	520.0	226.1	373.5	5.0
SO4	1437.0	1668.7	2780.6	0.8
Cl	5725.3	5725.3	9389.0	229.7
NO3	0.0	0.0	0.0	0.0
CO2	21.4	233.4	233.4	233.4
SiO2	0.0	0.0	0.0	0.0
Fe	0.0	0.0	0.0	0.0
F	0.0	0.0	0.0	0.0
Ba	0.0	0.0	0.0	0.0
Sr	0.0	0.0	0.0	0.0
TDS	11861.3	11799.1	19406.6	387.9

OPERATING pHFA 6.2
66 Be ACID - #/K GAL. FEED 2.12#/K GAL.PRODUCT 5.30
BRAKE HORSEPOWER = 4.47069
KWH/1000 GAL. OF PRODUCT = 13.73851

Fig. E

DESIGN SUMMARY

BY RO FOR ROA
DATE 01-01-1980
PRODUCT FLOW 4.6(1.1) GPM(CU.M./HR) 6677(25) GPD(CU.M./D)
RECOVERY 50 TEMPERATURE 25 C
MEMBRANE SYSTEM FS MODEL BW4021LP 6
MAX.OPER.PRESSURE 317(22) PSI(KGR./SQ.CM) NO. OF TRAINS 1
INITIAL PRESSURE 263(18) PSI(KGR/SQ.CM)

TRAIN CONFIGURATION

STAGE	VESSELS	FEED FLOW GPM(C.M/HR)	PRODUCT FLOW GPM(C.M/HR)	BRINE FLOW GPM(C.M/HR)	BRINE PRESSURE PSI(Kg/Sq.Cm)
1	1	9.3(2.1)	4.6(1.1)	4.6(1.1)	237.2(16.7)
SYSTEM	1	9.3(2.1)	4.6(1.1)	4.6(1.1)	

FINAL WATER ANALYSIS

	FEED RAW MG/L	FEED ACIDIFIED MG/L	BRINE MG/L	PRODUCT MG/L
Ca	168.0	168.0	334.5	1.5
Mg	291.0	291.0	578.8	3.2
Na	2048.3	2048.3	3919.3	177.2
K	90.0	90.0	169.9	10.1
HCO3	305.0	150.9	295.1	6.7
SO4	843.0	964.5	1928.1	1.0
Cl	3583.0	3583.0	6876.6	289.4
NO3	0.0	0.0	0.0	0.0
CO2	12.5	123.7	123.7	123.7
SiO2	0.0	0.0	0.0	0.0
Fe	0.0	0.0	0.0	0.0
F	0.0	0.0	0.0	0.0
Ba	0.0	0.0	0.0	0.0
Sr	0.0	0.0	0.0	0.0
TDS	7328.3	7295.7	14102.2	489.2

OPERATING pHFA 6.3
66 Be ACID - #/K GAL. FEED 1.11#/K GAL.PRODUCT 2.22
BRAKE HORSEPOWER = 2.020426
KWH/1000 GAL. OF PRODUCT = 6.039609

DESIGN SUMMARY

Fig. 9

BY RO FOR ROA

DATE 02-18-1987

PRODUCT FLOW 4.5(1.0) GPM(CU.M./HR) 6534 (25) GPD(CU.M./D)

RECOVERY 40 TEMPERATURE 26 C

MEMBRANE SYSTEM FT MODEL SWHR4040 6

MAX.OPER.PRESSURE 889(62) PSI(KGR./SQ.CM) NO. OF TRAINS 1

INITIAL PRESSURE 756(53) PSI(KGR/SQ.CM)

TRAIN CONFIGURATION

STAGE	VESSELS	FEED FLOW GPM(C.M/HR)	PRODUCT FLOW GPM(C.M/HR)	BRINE FLOW GPM(C.M/HR)	BRINE PRESSURE PSI(Kg/Sq.Cm)
1	2	11.3(2.6)	4.5(1.0)	6.8(1.5)	873.2(61.4
SYSTEM	2	11.3(2.6)	4.5(1.0)	6.8(1.5)	

FINAL WATER ANALYSIS

	FEED RAW MG/L	FEED ACIDIFIED MG/L	BRINE MG/L	PRODUCT MG/L
Ca	423.0	423.0	703.8	1.8
Mg	1403.0	1403.0	2332.3	9.1
Na	11819.2	11819.2	19607.9	136.1
K	463.0	463.0	765.9	8.6
HCO3	144.0	138.2	228.5	2.8
SO4	2950.0	2954.6	4915.9	12.7
Cl	21200.0	21200.0	35175.9	236.1
NO3	0.0	0.0	0.0	0.0
CO2	1.5	5.7	5.7	7.5
SiO2	1.0	1.0	1.6	0.0
Fe	0.0	0.0	0.0	0.0
F	0.0	0.0	0.0	0.0
Ba	0.0	0.0	0.0	0.0
Sr	0.0	0.0	0.0	0.0
TDS	38404.7	38401.9	63731.7	407.2

OPERATING pHFA 7.6

66 Be ACID - #/K GAL. FEED 0.04#/K GAL.PRODUCT 0.10

BRAKE HORSEPOWER = 6.92071

KWH/1000 GAL. OF PRODUCT = 21.13841

DESIGN SUMMARY

Fig. 10

RO FOR ROA

L 02-19-1987

DUCT FLOW 4.5(1.0) GPM(CU.M./HR) 6502 (25) GPD(CU.M./D)

COVERY 40 TEMPERATURE 25 C

MBRANE SYSTEM FS MODEL SW1021SS 5

.OPER.PRESSURE 953(67) PSI(KGR./SQ.CM) NO. OF TRAINS 1

ITIAL PRESSURE 783(55) PSI(KGR/SQ.CM)

TRAIN CONFIGURATION

AGE	VESSELS	FEED FLOW GPM(C.M/HR)	PRODUCT FLOW GPM(C.M/HR)	BRINE FLOW GPM(C.M/HR)	BRINE PRESSURE PSI(Kg/Sq.Cm)
1	2	11.3(2.6)	4.5(1.0)	6.8(1.5)	938.9(66.0)
STEM	2	11.3(2.6)	4.5(1.0)	6.8(1.5)	

FINAL WATER ANALYSIS

	FEED RAW MG/L	FEED ACIDIFIED MG/L	BRINE MG/L	PRODUCT MG/L
	423.0	423.0	704.7	0.5
	1403.0	1403.0	2337.2	1.7
	11819.2	11819.2	19576.1	188.0
	463.0	463.0	767.1	6.9
O3	144.0	138.2	229.3	1.5
4	2950.0	2954.6	4924.0	0.4
	21200.0	21200.0	35131.1	300.3
3	0.0	0.0	0.0	0.0
2	1.5	5.7	5.7	6.8
O2	1.0	1.0	1.6	0.1
	0.0	0.0	0.0	0.0
	0.0	0.0	0.0	0.0
	0.0	0.0	0.0	0.0
	0.0	0.0	0.0	0.0
S	38403.2	38401.9	63673.1	499.4

ERATING pHFA 7.6

Be ACID - #/K GAL. FEED 0.04#/K GAL.PRODUCT 0.10

AKE HORSEPOWER = 7.382136

H/1000 GAL. OF PRODUCT = 22.66038

Fig. 11

DESIGN SUMMARY

BY RO FOR ROA
DATE 02-19-1987
PRODUCT FLOW 5.7(1.3) GPM(CU.M./HR) 8151 (31) GPD(CU.M./D)
RECOVERY 50 TEMPERATURE 25 C
MEMBRANE SYSTEM FT MODEL SW4040 6
MAX.OPER.PRESSURE 855(60) PSI(KGR./SQ.CM) NO. OF TRAINS 1
INITIAL PRESSURE 727(51) PSI(KGR/SQ.CM)

TRAIN CONFIGURATION

STAGE	VESSELS	FEED FLOW GPM(C.M/HR)	PRODUCT FLOW GPM(C.M/HR)	BRINE FLOW GPM(C.M/HR)	BRINE PRESSURE PSI(Kg/Sq.Cm)
1	4	11.3(2.6)	5.7(1.3)	5.7(1.3)	850.5(59.8
SYSTEM	4	11.3(2.6)	5.7(1.3)	5.7(1.3)	

FINAL WATER ANALYSIS

	FEED RAW MG/L	FEED ACIDIFIED MG/L	BRINE MG/L	PRODUCT MG/L
Ca	423.0	423.0	834.6	11.4
Mg	1403.0	1403.0	2766.8	39.2
Na	11819.2	11819.2	22978.0	660.3
K	463.0	463.0	888.8	37.2
HCO3	144.0	134.0	256.5	11.4
SO4	2950.0	2957.9	5840.9	74.9
Cl	21200.0	21200.0	41277.3	1122.7
NO3	0.0	0.0	0.0	0.0
CO2	1.5	8.7	8.7	24.7
SiO2	1.0	1.0	1.8	0.2
Fe	0.0	0.0	0.0	0.0
F	0.0	0.0	0.0	0.0
Ba	0.0	0.0	0.0	0.0
Sr	0.0	0.0	0.0	0.0
TDS	38403.2	38401.0	74844.8	1957.3

OPERATING pHFA 7.4
66 Be ACID - #/K GAL. FEED 0.07#/K GAL.PRODUCT 0.14
BRAKE HORSEPOWER = 6.641361
KWH/1000 GAL. OF PRODUCT = 16.26136

Fig. 12

DESIGN SUMMARY

BY RO FOR ROA
DATE 02-19-1987
PRODUCT FLOW 4.6(1.1) GPM(CU.M./HR) 6662(25) GPD(CU.M./D)
RECOVERY 55 TEMPERATURE 25 C
MEMBRANE SYSTEM FT MODEL BW4040 6
MAX.OPER.PRESSURE 243(17) PSI(KGR./SQ.CM) NO. OF TRAINS 1
INITIAL PRESSURE 206(14) PSI(KGR/SQ.CM)

TRAIN CONFIGURATION

STAGE	VESSELS	FEED FLOW GPM(C.M/HR)	PRODUCT FLOW GPM(C.M/HR)	BRINE FLOW GPM(C.M/HR)	BRINE PRESSURE PSI(Kg/Sq.Cm)
1	1	8.4(1.9)	4.6(1.1)	3.8(0.9)	185.5(13.0)
SYSTEM	1	8.4(1.9)	4.6(1.1)	3.8(0.9)	

FINAL WATER ANALYSIS

	FEED RAW MG/L	FEED ACIDIFIED MG/L	BRINE MG/L	PRODUCT MG/L
Ca	11.4	11.4	24.9	0.3
Mg	39.2	39.2	85.6	1.2
Na	660.3	660.3	1430.6	30.1
K	37.2	37.2	79.8	2.3
HCO3	11.4	11.4	24.4	0.8
SO4	74.9	74.9	164.1	1.9
Cl	1122.7	1122.7	2433.3	50.5
NO3	0.0	0.0	0.0	0.0
CO2	24.7	24.7	24.7	24.7
SiO2	0.2	0.2	0.4	0.0
Fe	0.0	0.0	0.0	0.0
F	0.0	0.0	0.0	0.0
Ba	0.0	0.0	0.0	0.0
Sr	0.0	0.0	0.0	0.0
TDS	1957.3	1957.3	4243.2	87.0

OPERATING pHFA 7.4
66 Be ACID - #/K GAL. FEED 0.07#/K GAL.PRODUCT 0.14
BRAKE HORSEPOWER = 1.400537
KWH/1000 GAL. OF PRODUCT = 4.196031

100

DESIGN SUMMARY

Fig 12

B RO FOR ROA

DATE 02-19-1987

PRODUCT FLOW 4.6(1.1) GPM(CU.M./HR) 6685(25) GPD(CU.M./D)

RECOVERY 80 TEMPERATURE 25 C

MEMBRANE SYSTEM DT MODEL BW4040 6

AVG.OPER.PRESSURE 181(13) PSI(KGR./SQ.CM) NO. OF TRAINS 1

INITIAL PRESSURE 154(11) PSI(KGR/SQ.CM)

TRAIN CONFIGURATION

STAGE	VESSELS	FEED FLOW GPM(C.M/HR)	PRODUCT FLOW GPM(C.M/HR)	BRINE FLOW GPM(C.M/HR)	BRINE PRESSURE PSI(Kg/Sq.Cm)
1	1	5.8(1.3)	3.0(0.7)	2.8(0.6)	146.3(10.3)
2	1	2.8(0.6)	1.6(0.4)	1.2(0.3)	141.1(9.9)
SYSTEM	2	5.8(1.3)	4.6(1.1)	1.2(0.3)	

FINAL WATER ANALYSIS

	FEED RAW MG/L	FEED ACIDIFIED MG/L	BRINE MG/L	PRODUCT MG/L
Ca	11.4	11.4	53.8	0.8
Mg	39.2	39.2	182.6	3.3
Na	660.3	660.3	2964.1	84.4
K	37.2	37.2	160.2	6.4
HCO3	11.4	11.4	48.5	2.1
SO4	74.9	74.9	352.6	5.5
Cl	1122.7	1122.7	5047.7	141.5
NO3	0.0	0.0	0.0	0.0
CO2	24.7	24.7	24.7	24.7
SiO2	0.2	0.2	0.9	0.0
Fe	0.0	0.0	0.0	0.0
F	0.0	0.0	0.0	0.0
Ba	0.0	0.0	0.0	0.0
Sr	0.0	0.0	0.0	0.0
TDS	1957.3	1957.3	8810.4	244.1

OPERATING pHFA 7.4

66 Be ACID - #/K GAL. FEED 0.07#/K GAL.PRODUCT 0.14

BRAKE HORSEPOWER = .7197309

KWH/1000 GAL. OF PRODUCT = 2.148658

APPENDIX G

DERIVATION OF ARRAY POWER FORMULA

APPENDIX G

Derivation of Array Power Formula

An Energy Balance on a PV system can be done starting with the general formula:

Energy Produced x Efficiency Factors = Energy Consumed by Load + Losses.

The left side of the equation can be expressed as:

Array Power x Time x η operating x η P.C.

Where:

Array power	=	Rated Power at Standard Conditions at a given angle
Time	=	No. of full sun hours equivalent (Hours)
η Operating	=	Efficiency factor that takes into account a derating because of temperature effects and wiring losses in the array field (dimensionless)
η P.C.	=	Efficiency that takes into account the losses associated with channeling power through the power conditioning equipment (dimensionless)
Energy Consumed	=	Load times duration (kw-Hr)
Losses	=	Miscellaneous Losses (Kw-Hr)

Rearranging terms, the general formula can be expressed as follows:

$$\text{PV Array Size} = \frac{\text{Load + Losses}}{(\text{Time})\ (\text{PV Oper. Eff.})\ (\text{Power Cond. Eff}}$$

APPENDIX H

DATA OUTPUT SAMPLE

2	DATA CALC NUMBER.....	65	
3	DATA INPUT INPUT NUMBER.....	1	
4	CELL TEMP AT NOT CONDITIONS E..	45	C
5	AMB + ADD+DIVIDE EFFICIENCY....	.12	
6	AMB + MULT+DIVIDE TEMPERATURE...	27	C
7	AMB + TEMP DIFF DIFF A LOAD.	4.2	DEG
8	POWER TRANSMISSION EFFICIENCY.....	.9	
9	POWER CONDITIONING EFFICIENCY.	.9	
10	% STANDARD DEVIATION OF LOAD..	0	%
11	EXPECTED PERIOD LOAD.....	21	KW-HR
12	EXP TEMP EFFICIENCY.....	.8	
13	MAX MPP.....	10.	MW
14	DATA DIFF.....	22	DEG
15	DATA ACTUAL SOLAR.....	0	DEG

SUMMARY

	SOLAR KW-HR	LOAD KW-HR	F %	BUY KW-HR	IS KW-HR
JAN	12997.2	1595.9	67.1	326.0	162.0
FEB	15114.5	1446.1	78.6	288.8	193.2
MAR	20771.9	1548.4	95.6	70.2	247.1
APR	20766.5	1547.2	93.7	96.1	243.1
MAY	22173.7	1596.9	101.1	-8.8	229.4
JUN	21532.5	1547.2	100.1	-3.1	227.5
JUL	22887.2	1596.9	102.2	-3.9	202.9
AUG	22640.7	1596.9	99.6	6.5	236.2
SEP	21285.5	1547.2	98.9	17.2	216.3
OCT	18817.7	1596.9	94.5	247.8	210.8
NOV	14647.1	1547.2	74.8	455.1	165.8
DEC	13[illegible]	1596.9	[illegible]	[illegible]	147.4
YR	207477.1	18815.1	87.6	2123.2	2457.9

Best Available Document