PN-AAC-156

RENEWABLE ENERGY RESOURCES
FIELD TESTING

STATEMENT OF WORK FOR FIELD TEST #3
POULTRY PROCESSING
SOLAR THERMAL INDUSTRIAL PROCESS HEAT
GENERAL POULTRY, HELIOPOLIS, EGYPT
DECEMBER 1986

FINAL

Prepared for

Egyptian Electricity Authority
Cairo, Egypt

U.S. Agency for International Development
USAID Mission: Cairo, Egypt

Submitted to

Louis Berger International, Inc.
Washington, D.C.
(Contract AID 263-0123C-00-4069-00)

Prepared by

Lockwood Greene Engineers, Inc.
Spartanburg, South Carolina

STATEMENT OF WORK

SECTION		PAGE
1.0	PROJECT DESCRIPTION	
1.1	Background of the Renewable Energy Resources Field Testing Project	1-1
1.2	Description of System	1-2
1.3	Summary of Bidder Requirements	1-5
1.4	Description of the Application Site	1-8
2.0	FLAT PLATE SOLAR SYSTEM, FLASH STEAM SYSTEM, AND CONDENSATE RETURN SYSTEM DESIGN SPECIFICATIONS	
2.1	Schedule for Design, Delivery and Installation	2-1
2.2	Design Review	2-1
2.3	General Design Requirements	2-2
2.4	Technical Design Requirements	2-3
2.4.1	Solar System	2-3
2.4.2	Flash Steam System	2-8
2.4.3	Condensate Return System	2-10
2.4.4	Piping, Valves, and Piping Specialties	2-12
2.4.5	Insulation	2-14
2.4.6	Electrical	2-15
2.4.7	Instrumentation	2-16
2.5	Proof of Performance	2-17
3.0	INSTALLATION	
3.1	Equipment Shipment	3-1
3.2	Plan and Schedule for Construction	3-1
3.3	Site Planning and Construction	3-3
4.0	OPERATION AND MAINTENANCE	
4.1	Schedule of Energy Production	4-1
4.2	Guarantee/Spare Parts Requirements	4-1
4.3	Operations Support	4-1
5.0	PERFORMANCE MONITORING	
5.1	Field Test Data Aquisition System	5-1
5.2	ODAS Installation and Training	5-1
5.3	Log Sheets/Maintenance Records	5-2
6.0	TRAINING REQUIREMENTS	
6.1	Operator Training Program	6-1
6.2	Maintenance Training Program	6-2
6.3	In-Factory Training Program	6-3
7.0	SYSTEM ACCEPTANCE TEST CRITERIA	
7.1	Point of Manufacture Testing (PMT)	7-1
7.2	Field Acceptance Testing	7-1

8.0 OPERATION AND MAINTENANCE MANUALS
8.1 System Description 8-1
8.2 System Installation 8-1
8.3 System Operation 8-2
8.4 Principals (or Theory) of Operation 8-2
8.5 Maintenance (Preventive/Corrective) 8-2
8.6 Parts List 8-3
8.7 Drawings 8-3

9.0 SPECIAL PROVISIONS
9.1 Site Access and Local Labor 9-1
9.2 Protection of the Environment and Personnel 9-1
9.3 Public Release of Information 9-1
9.4 Pre-Award Survey 9-2
9.5 Minimum Proposal Requirements 9-2
9.5.1 Organization Chart 9-2
9.5.2 Key Personnel and Resumes 9-2
9.5.3 Staffing Plan 9-3
9.5.4 Related Experience 9-3
9.5.5 Construction Projects 9-3
9.5.6 Operating and Maintenance of Solar IPH/Waste Systems 9-3
9.6 Post-Award Site Visit 9-4
9.7 Summary of Deliverables 9-4
9.7.1 Contract Documentation Schedule 9-4
9.7.2 Contract Hardware Installation Schedule 9-5

APPENDICES

A. Proposed Process Flow Diagram A-1

B. Insolation Data: Cairo, Egypt B-1

C. Field Test Data Acquisition System C-1

D. Simplified Process and Instrument Diagram D-1

E. Plant Layout E-1

F. FCHART-4R Results F-1

G. Services and Prices G-1

1.0 PROJECT DESCRIPTION

1.1 Background of the Renewable Energy Resources Field Testing Project

The Government of Egypt herein referred to as (GOE) and the U.S. Agency for International Development (USAID) have initiated a four year Renewable Energy Field Test project (REFT). The Egyptian Electricity Authority (EEA/EREDO) and Louis Berger International, Inc. are leading a team of subcontractors in the REFT project activities that encompass solar industrial process heat, wind and photovoltaic system applications.

The specific objectives of the EEA/EREDO project are twofold: (1) to demonstrate, analyze and evaluate the viability of commercially available renewable energy technologies in Egypt, and (2) to establish the infrastructure necessary to ensure that succesful renewable technologies are available for widespread use in-country. Three tasks are planned:

(1) Field Tests - Assess selected renewable energy systems/applications which could be suitable for commercial use in Egypt; develop detailed engineering design hardware specifications and system performance requirements; prepare RFP (Request for Proposal) packages for procuring equipment; supervise the work of hardware contractors; and collect and evaluate data generated from the field tests.

(2) Supporting Analysis - Conduct technical, social, financial, economic, and market analyses of renewable energy systems related to the field tests. Develop a computerized Renewable Energy Information System (REIS).

(3) Training - Improve the skills of the EEA/EREDO and the private sector in evaluating renewable energy technologies, applications, economics and markets, and provide technical assistance in systems design, installation, operation and maintenance.

B. Pumps

Electrically driven pumps shall be compatible with hot water service. Consideration should be made for stagnation temperatures which would be much higher than normal operating temperatures.

Two circulation pumps (one active and one standby) shall be sized to provide the flow required at the heads imposed by the solar system. The circulation pump should be sized to meet the requirements of the collection system so as to circulate water through the collectors at a flow rate that produces optimum efficiency. The pumps may be centrifugal or positive displacement type.

C. Valves

Valves shall be constructed of material compatible with hot water service. This should include body, shafts, seals, and valve mechanism. The correct style valve design should be chosen for each location in the hydraulic circuit.

D. Thermal Storage Tanks

Solar collection water storage tank(s) shall be sized to provide one day's storage to meet the process demand requirements for initial scalder fill, daily evaporation losses, and product carryover.

E. Controls

The control system shall be designed and constructed such that high system reliability in a harsh environment is attained. Simplicity should be a prime goal in the design of the control system. The system is to be assembled and tested prior to shipment.

F. Flash Steam System

The contractor shall design, specify, supply, and install a steam flash tank system to recover energy from high pressure steam condensate discharge streams.

G. Condensate Return System

The contractor shall design, specify, and supply condensate return system(s) for combining the discharge from low pressure steam condensate streams. The system shall operate at atmospheric pressure.

H. Piping, Valves, and Piping Specialties

Piping systems shall be designed and installed to include all control and isolation valving, traps, strainers, unions, anchors, guides, hangers, supports, instrumentation ports, and insulation as required for a completed system.

I. Piping Insulation

All piping serving the solar collection system shall be insulated with form-fitted, heavy-density fiberglass. All piping shall have an embossed aluminum jacket.

J. Equipment Insulation

All above-grade thermal storage tanks and heavy recovery equipment shall be insulated with heavy-density unfaced industrial fiberglass board conforming to equipment contours and banded in place.

K. Electrical

The contractor shall provide all electrical design, specifications materials, tools and construction labor to complete a ready to operate electrical system.

L. Instrumentation

The contractor shall provide all instrumentation design, specifications, materials, tools, and construction labor to complete a ready to operate instrumented solar IPH system.

M. Proof of Performance

EEA/EREDO and/or its appointed representatives reserves the right to witness inspection and performance tests for all hardware equipment at the manfuafcturer's (or contractor's) facilities prior to shipment.

1.3 Summary of Bidder Requirements

The tenderer shall submit a complete proposal for a turn-key job for the detailed design, manufacture, supply, instrumentation, installation, testing and performance guarantee of a flat plate solar system, flash steam system, and steam condensate return system. The

solar system shall include one day's storage capacity, and a hot water distribution system. The solar system shall help maintain scalder temperature and improve boiler efficiency. The proposals shall include on-the-job, classroom and in-factory training programs, including training materials and manuals, for the assigned Egyptian engineers and technicians. The operation, maintenance, training, troubleshooting and repair shall be according to requirements specified in Section 6.0. The contractor shall support operation of the system on request for a period of up to one year after the system is accepted by the EEA/EREDO. Each tenderer shall submit a set of qualification documents describing in detail the contractor's and subcontractor's relevant capabilities and experience on similar projects. EEA/EREDO reserve for themselves the right to refer to any of the tenderer(s) customers to obtain independant information about the contractor and/or the performance of equipment to be supplied.

The offer shall be made on turn-key basis. The contractor shall identify site preparation requirements. It is anticipated that required site preparation would be performed locally by an EEA/EREDO Contractor according to the tenderer's specifications and drawings and under the supervision of his representatives.

Representative climatic conditions are shown in Appendix -B-. The presence of airborne sand in the atmosphere, occasional sand storms and high temperature in summer shall be taken into consideration in the design of the proposed equipment.

For each component offered, the tenderer shall state in his offer the exact type and model number, estimated quantities and unit. He shall also submit a complete set of catalogues and drawings for each hardware item offered detailing complete specifications. All hardware offered shall be commercially available and proven reliable in similar applications. In general he shall develop a system similar to that

conceptualized. However, other system designs are encouraged but must be justified and defined in sufficient detail to allow the evaluators to relate the system to that proposed.

The tenderer shall include in his offer a preliminary design description; system layout drawing; functional schematic; system electrical circuit diagram including the performance monitoring instrumentation system; and typical year round daily performance curves for the solar system, flash steam system, and condensate return system. Maintenance requirements and spare parts lists for each major equipment item shall be included. In addition, the proposal should include details of installation, design procedures and interface requirements. Electrical and other utility requirements shall be identified.

Packaging and shipping of all required hardware to Alexandria, Egypt, custom clearance and transportation to the General Poultry site shall be the responsibility of the contractor. EEA/EREDO will assist with custom clearance and permits as required.

The tenderer shall provide estimated quantities and unit prices of system components. Cost reimbursement for supplies will be based on the conceptual design.

The bidder shall furnish all necessary hardware and material for the satisfactory performance of the project systems. A breakdown of each item used in the systems is encouraged. This will include at a minimum the following equipment, materials and services:

<u>Hardware</u>

1. Flat-Plate Solar Collectors
2. Solar Storage Tank
3. Solar Circulation and Distribution Pumps
4. All Solar System Controls
5. Solar Circulation and Distribution Piping and Fittings
6. A Meteorolligical Station for Onsite Data Acquisition

7. Flash Steam Tank
8. Flash Steam System, Valves, Instrumentation and Controls
9. Flash Steam System Piping
10. Condensate Return System Tanks
11. Condensate Return System Pumps
12. Condensate Return System Piping
13. Condensate Return System Instrumentation and Controls
14. All Electrical Controls and Panels
15. All Equipment and Piping Insulation
16. All Mechanical Tie-Ins
17. All Electrical Interfaces
18. Approved User Manuals for Project Systems.
19. Required Operating and Maintenance Repair Tools, Meters, Spare Parts, etc.
20. An on-site data acquisition system for performance monitoring of the solar system, flash steam system and condensate return systems.
21. All other miscellaneous items, support steel, etc. necessary to provide a complete, ready for use, turn-key installation.

Services

1. Detailed System Design, Instrumentation, Procurement and Shipment
2. Installation, Checkout, Operations Support for 1 year after acceptance, and acceptance testing
3. Training of Egyptian Engineers/Technicians (Classroom, in-factory and on-the-job in Operation, Maintenance, Data Acquisition, Troubleshooting and Repair)
4. Two-year guarantee on all parts

Use of Egyptian materials and personnel are encouraged. This will not however, relieve the tenderer from meeting all specifications and requirements given here after.

1.4 Description of the General Poultry Site

General Poultry, located in Heliopolis, near Cairo, is a large poultry processing plant, packing 50,000 chickens per day. An ongoing expansion will increase production to 100,000 chickens per day. The process plant includes an unloading area, slaughter area, scalding process, rendering removal (feathers, organs, heads, feet, etc.) area, rendering cooker area, cleaning area, and packaging areas.

Each day 5 mTONS (11,025 lbs) of dead birds are also processed in the rendering cookers in addition to waste parts from the production line.

The cookers use high pressure steam to evaporate the moisture in renderings. The moisture is condensed in a series of vent condensers. Solids are returned to the poultry farm and used as feed. The rendering cookers' steam is from one oil-fired boiler operating at 8 bar (116 psig).

Each morning the scalders are filled with cold water and the temperature increased to 60°C (140°F) using low pressure steam in a closed coil. Scalder make-up water is required due to evaporation and water entrained in the chicken feathers as the chickens leave the scalder. Appendix -A- includes an operating schedule for scalders and rendering cookers.

Boilers supplying steam to the rendering cookers and the scalders are assumed to operate at 75% efficiency (Note: No boiler or stack data is available).

No steam condensate is returned to the boilers; therefore boiler feed is 100% make-up. The make-up water is not preheated.

Electrical source is 220 volt, single phase, 50 Hertz and 380 volt, three phase, 50 Hertz.

2.0 FLAT PLATE SOLAR SYSTEM, FLASH STEAM SYSTEM, AND CONDENSATE RETURN SYSTEM DESIGN SPECIFICATION

2.1 Schedule for Design, Delivery and Installation

The Contractor's proposal shall include the dedicated time requirements for the design, manufacture, factory testing, procurement, and delivery of the complete system cost, insurance and freight, CIF, to Alexandria, Egypt. In no case shall the total time exceed 150 days from the date of contract award.

Within 14 days after contract award, the Contractor shall submit for EEA/EREDO review a detailed project schedule for the design, manufacture, factory testing, installation, instrumentation, startup and acceptance testing of the proposed Solar Thermal IPH Project. The schedule shall include provision for a final design review and approval by EEA/EREDO, or its designated representative, prior to start of manufacture and procurement. The schedule will be approved in writing (or an alternate recommended) by the contracting officer within 14 days of receipt in Cairo.

2.2 Design Review

The EEA/EREDO or its authorized representative shall have the right to review drawings and specifications pertaining to the design of the system and individual components. Submission of the drawings and specifications for review and the completion of the review will be in accordance with the detailed project schedule (Section 2.1) submitted by the Contractor and approved by EEA/EREDO. EEA/EREDO shall have the right to require modifications to the design prior to final design approval for specified cause; namely: for minimum safety, prevention of harm to property or equipment, meeting of minimum standards, or interference with General Poultry operations.

2.3 General Design Requirements

The Solar System, Flash Steam System and Condensate Return System plant design shall conform to U.S. standard specifications and practice with all equipment suited and sized for efficient, safe and functional use. The system should be designed for a life of 15 years [illegible]. [illegible] power [illegible] system, [illegible] breakers and instrument controls, should provide for reasonable equipment protection against incorrect procedures for starting, stopping, and operating the equipment. Operating and maintenance personnel safety shall be an integral part of the system design. All proposed equipment shall be commercially available, and of demonstrated reliability. The use of protoype or one-of-a-kind hardware will not be allowed.

The required level of the final design detail shall include as a minimum:

- Justification for system sizing and design including all calculations and technical/operational assumptions
- Justification for component selection
- Component (product) literature where appropriate
- General piping layout drawing with valves and fittings
- General electrical schematics showing junction connections, grounding circuitry, voltage and current limits, etc.
- An installation diagram that includes the relative sizing and location of major pieces of equipment in relation to the facility

2.4 Technical Design Requirements

This section provides specification guidelines. The guidelines should assist the contractor in preparing the final specifications. Areas covered include:

- Solar System
  - Collectors
  - Pumps
  - Valves
  - Thermal Storage Tanks
  - Controls
- Flash Steam System
- Condensate Return System
- Piping, Valves, and Piping Specialties
- Insulation
- Electrical
- Instrumentation

2.4.1 Solar System

A. Collectors

Provide not more than 4,000 square feet of flat plate collectors with an instantaneous efficiency curve not less than a first order y intercept of .71 and a slope of not more than .76. The proposed must include a computer model of the proposed system. Collector field output will be weighed heavily in proposed evaluation.

The collectors shall be flat plate construction treated to insure reliable operation for the specified life of the plant in Egyptian Environment. The glazing shall be low iron glass suitably mounted and sealed to maintain collector integrity.

The collector tubes cross sectional area shall be no smaller than 1/2" inside diameter and designed for 125 psig operating pressure.

The headers and collection tubes shall be constructed of copper and shall be joined together in such a manner as to insure proper collector operation for the system life without joint degradation between the headers and the tubes. The absorber plate shall be constructed of copper or aluminum sheet and shall be bonded to the absorber tubes in a manner conducive to effective heat transfer. Roll bond type absorbers will not be considered. Absorbers shall be finished with a selective coating having an absorptivity of .95 and emissivity of .10.

The minimum aperture area shall be 85% of the gross area. Row spacing shall be designed to prevent shading of adjacent rows. Mounting shall be parallel to the building column lines but shall not deviate more than +/-10 degrees from true south. Tilt angle shall be 45° from horizontal, field adjustable.

Sealing compounds, gaskets, and insulation shall be capable of withstanding stagnation temperatures without outgassing. Insulation shall be closed cell type.

The collector shall be designed and mounted in such as manner as to provide adequate support during a 25 meters/second wind load.

The collector array shall be roof mounted on steel supports with walkways provided for easy maintenance access. See Appendix -E- for example.

The collectors shall be tested and rated in accordance with ASHRAE 93-77 and the ASHRAE first order efficiency equation shall be used as as a guide' ne for collector efficiency.

$$eff = F_R (\tau\alpha) - F_R U_L (T_i - T_a)/G_T$$

Within 30 days of contract award, the collector of the brand and model proposed shall be shipped to EEA for evaluation.

B. Pumps

Electrically driven pumps shall be compatible with hot water service. Consideration should be made for stagnation temperatures which would be much higher than normal operating temperatures.

Two circulation Pumps (one active and one standby) shall be sized to provide the flow required at the heads imposed by the solar system. The circulation pump should be sized to meet the requirements of the collection system so as to circulate water through the collectors at a flow rate that produces optimum efficiency. The pumps may be centrifugal or positive displacement type.

Distribution pumps, if used, should be sized for the flow requirements of the process load. The use of multiple pumps in parallel should be considered when throttling of one pump would bring flow below manufacturer's recommended minimum.

All pumps' design shall be seal-less or mechanical seal type to reduce maintenance and minimize solar water energy losses. All pumps shall be equipped with isolation valves, discharge check valve, inlet strainer with drain valve, pressure gauge (with isolation valves). Each pump shall be equipped with an appropriate sized recyle line with globe valve piped from the pump discharge to the pump suction.

C. Valves

Valves shall be constructed of materials compatible with hot water service. This should include body, shafts, seals, and valve mechanism. The correct style valve design should be chosen for each location in the hydraulic circuit. Each pump shall have isolation valves. A high performance butterfly valve (wafer) is recommended for this application. Straight-through swing check valves should be installed on all pump discharges and elsewhere as required. Vents, drains and gauge isolation values should be ball valves. Isolation valves for rows of collectors should be minimized, thus minimizing the number of safety valves. Valves or orifice plates or piping design may be used to balance flow through individual collector circuits. Control valves should be butterfly valves (wafer) with electrical or pneumatic actuation.

D. Thermal Storage Tanks

Solar collection water storage tank(s) shall be sized to provide one day's storage to meet the process demand requirements for initial scalder fill, daily evaporation losses, and product carryover.

The tank(s) shall be designed and fabricated to meet or exceed all applicable codes and standards. The tanks shall have all flanged connections required for proper installation, operation, and control.

Preference shall be given to ground level or below grade storage; overhead or roof-mounted tanks shall not be considered.

The storage may be either atmospheric or pressurized.

Internal piping and/or baffles shall be provided for stratified storage.

Tank material shall be selected as appropriate for installation and service requirements (above/below grade).

Fiberglass or carbon steel tank with corrosion resistant interior coatings suitable for potable water shall be provided.

E. Controls

The control system shall be designed and constructed such that high system reliability in a harsh environment is attained. Simplicity should be a prime goal in the design of the control system. The system is to be assembled and tested prior to shipment.

The contractor shall design and install a control system for the solar collection system compatible with the operational requirements of section 1.0 of this Statement of Work.

Manually operated balance valves with local flow indicating meters shall be provided on each collector row.

The circulation pumps shall be operated by an adjustable on/off differential temperature controller.

Locally mounted dial thermometers with thermal wells shall be installed at the inlet and outlet of each collector row, on the main solar heated return header to the storage tank and on the main outlet from the storage tank to the pump's suction as a minimum. Each thermometer shall be easily visible from the walkways.

All pump discharges shall have a dial pressure indicator.

2.4.2 Flash Steam System

A. The contractor shall design, specify, supply, and install a steam flash tank system to recover energy from high pressure steam condensate discharge streams. The combined discharge flows shall enter the flash tank through a tangential nozzle. The percent flash steam, lb/hour and btu/hour shall be calculated by the contractor. The steam velocity leaving the liquid surface shall not exceed three (3) feet per second. The system shall operate at 1 bar gauge.

B. The flash tank shell shall be constructed of pressure vessel quality steel ASME coded for 150 psig. The thickness shall not be less than 0.25 inches (0.635 cm). All local codes shall also be met.

C. A heavy duty welded structural steel stand with integral pump support shall be provided to support the flash tank system. Two pumps shall be provided each with twice the normal flow capacity. The pumps shall be centrifugal type designed for heavy industrial service with low NPSH characteristics. Minimum rpm motors are preferred, with integral- mounted pump bearing frame housing and shall be "C" flange type to assure proper alignment.

D. Should the flash steam system be located near the condensate return system or the deaerator, the pumps can be eliminated and the flash steam pressure (1 Bar) used to transfer flash steam system condensate to the condensate return receivers.

E. The condensate shall be continuously discharged using a side-mounted level control unit with isolation, drain and vent valves. A side-mounted reflective gauge glass shall be located on the flash tank chamber for observation of condensate level control. The flash tank shall be equipped with a low level alarm and pump cut off. Electrical control circuits shall be pre-wired internally with all wiring clearly color coded and connected to a numbered terminal block to facilitate field connection of electrical equipment external to the packaged system.

F. An approved pressure relief valve shall be provided to meet all local and government codes. The pressure relief valve discharge shall be directed away from the building and operating personnel. The discharge line shall be sized to prevent a back pressure exceeding one psig.

G. Commercial packaged systems are encouraged and should be sized based on the maximum rate of condensate flow. See Appendix -A-.

2.4.3 Condensate Return System

A. The contractor shall design, specify, and supply condensate return system(s) for combining the discharge from low pressure steam condensate streams. The system shall operate at atmospheric pressure. See Appendix -A- for sizing data.

B. The condensate receiver shall be of closed grained cast iron construction, furnished with: (2) externally adjustable 2-pole float switches, water level gauge, dial thermometer, (2) dial pressure gauges for pump discharges, (2) suction piping with all bronze isolation gate valves between pump suction and receiver and (2) lifting eye bolts.

C. A cast iron inlet strainer with vertical self-cleaning bronze screen and large dirt pocket shall be mounted on the receiver. The screen shall be easily removable for cleaning, requiring no additional floor space for servicing.

D. The water pumps shall be two-stage, centrifugal design, permanently aligned and flange mounted for vertical operation. Each pump shall be bronze fitted with enclosed bronze centrifugal impeller,axial flow, bronze first-stage impeller, bronze straightening vanes, renewable bronze case ring and stainless steel shaft. Mechanical seals shall be suitable for 250°F operation. Each pump shall be close-coupled to a minimum rpm, vertical, drip-proof motor and shall deliver its full capacity at operating temperature, with at 2 ft. NPSH (net positive suction head).

E. Contractor shall furnish, mount on the deck and wire, a NEMA II control cabinet with piano hinged door and grounding lug, enclosing the following: UL listed.

(2) Combination magnetic starter (having 3 over-load relays) with circuit breaker and cover interlock.
(1) Electrical alternator.
(2) "Auto-Off-Hand" selector switch.
(1) Numbered terminal strip.
(1) Removable control mounting plate.
(1) Fusible control circuit transformer for each circuit

F. Each pump control circuit shall be completely independent of the other. The electrical alternator shall (1) change the operating sequence automatically after each cycle, (2) provide simultaneous operation under peak load conditions and (3) operate the second pump automatically, should the active pump or its controls fail.

G. All factory installed wiring shall be numbered for easy identification and the numbers shall coincide with those shown on the wiring diagrams.

H. The unit shall be factory tested as a complete unit and the manufacturer shall furnish complete elementary and connection wiring diagrams, piping diagrams and installation and operation instructions. The unit shall be shipped completely assembled.

2.4.4 Piping, Valves, and Piping Specialties

A. Piping systems shall be designed and installed to include all control and isolation valving, traps, strainers, unions, anchors, guides, hangers, supports, instrumentation ports, and insulation as required for a completed system. All systems shall be hydrostatically tested at 1.5 times the design pressure. All water systems shall be disinfected and flushed prior to use.

B. Piping material for the solar collection system array shall be seamless, drawn type K hard temper copper with wrought or cast copper fittings. Solder joint shall be made with 95-5 (tin-antimony) solder. Main headers may be galvanized steel.

C. Piping material for other systems (heat recovery, solar circulation headers and distribution) shall be galvanized carbon steel, stainless steel, threaded or flanged as required. Tubing may be considered in lieu of piping to decrease system mass and overnight heat loss.

D. All pipe systems shall have a maximum velocity of 7 ft/sec (2 meters/second) with the minimum inside diameter for optimal balance between parasitic power requirements and system heat loss.

E. Valves shall be specified as required for [illegible], and operation. Ball valves shall be full bore, bronze body. Wafer valves shall have carbon steel disc in carbon steel body. Swing-check valves shall be bronze construction with bronze disc.

F. Anchors, guides and expansion joints shall be provided as required for proper restraint and alignment. No rubber hoses shall be used. Flexible joints shall be stainless steel braided hose.

G. Hangers and supports shall be selected or designed to carry the loads with ample safety margin, provide for expansion and vibration, and give suitable support without contributing to piping stress. All supports, guides and anchors shall be thermally isolated from the piping system.

H. Unions shall be provided at control valves, specialty items, and equipment to allow easy disassembly for removal and maintenance. In general, unions should be 300-pound, malleable iron, screwed, with ground iron to brass seats. Dielectric unions shall be used between dissimilar metals.

I. Steam traps shall be provided as required and shall be inverted bucket traps with thermic vents, internal strainers, and orifices designed for the maximum pressure of the steam main. Each trap shall be followed by a check valve and equipped with unions for easy removal.

J. Strainers shall be provided in the suction inlet to all pumps, and shall be basket or "Y" type with drain valve.

K. Safety relief valves and automatic air relief valves shall be incorporated in the solar system design as required for a continuous, safe operation.

L. Provide a reduced pressure backflow preventor at all plant water tie-ins to prevent cross-contamination of water systems.

M. All piping shall be identified in English and Arabic based on the American National Standards Institute, Standard No. A13.1-1956.

2.4.5 Insulation

A. Piping

All piping serving the solar collection system shall be insulated with form-fitted, heavy-density fiberglass. All piping shall have an embossed aluminum jacket. Fittings shall have a PVC (poly vinyl chloride) form fitted cover. No duct tape shall be used.

The insulation product shall not support combustion. It shall have a flame spread rating not exceeding 25 and a smoke developed rating not exceeding 50 (ASTM E84 or UL 723 or English System equivalent). Insulation protection saddles shall be used at each hanger location. "Blocking" (multiple layers of insulation) shall be employed on all insulated piping 2-1/2" diameter or larger. Unions shall not be insulated.

Insulation thicknesses shall be selected to provide an overall heat loss equal to or less than 0.6 W/m^2 °C (0.10 $BTUH/ft^2$ °F). In no case shall the piping insulation thickness be less than 25.4 mm (1 inch).

B. Equipment

All above-grade thermal storage tanks and heat recovery equipment shall be insulated with heavy-density unfaced industrial fiberglass board conforming to equipment contours and banded in place. A field-applied mastic and/or aluminum cover surface finish will be required. Outdoor equipment will require a metal covering.

Insulation thicknesses shall be selected to provide an overall heat loss equal to or less than 0.6 W/m^2 °C (0.10 $BTUH/ft^2$ °F). In no case shall insulation thickness be less than 1".

The insulation product shall not support combustion. It shall have a flame spread rating not exceeding 25 and a smoke developed rating not exceeding 50 (ASTM E84 or UL 723).

Below-grade thermal storage tanks shall be insulated, as appropriate for the site conditions, using a hydrophobic material compatible with the equipment material (chemically inert).

2.4.6 Electrical

A. The contractor shall provide all electrical design, specifications materials, tools and construction labor to complete a ready to operate electrical system.

B. All electrical work shall conform with the requirements and recommendations of the NEMA (National Electrical Manufacturer's Association local codes and all applicable government codes.

C. The contractor shall provide all necessary raceways, offsets, fittings, and boxes and adjust all fixtures and equipment and provide all supporting materials required for a planned, coordinated and neat installation.

D. The Contractor shall commission and check for correct operation of all electrical devices.

E. Rigid conduit shall be galvanized, zinc metalized or aluminum.

F. Flexible conduit shall be used for final connections to motors.

2.4.7 Instrumentation

A. The contractor shall provide all instrumentation design, specifications, materials, tools, and construction labor to complete a ready to operate instrumented solar IPH system.

B. All instrumentation work shall conform to the requirements and recommendations of the Joint Industrial Counsel (JIC), American Society of Instrumentation, local codes, and all applicable government codes.

C. The contractor shall design, purchase and install all panels and instruments and provide all electrical and electronic interconnections between the various components

in the system and their local source of electrical energy. The contractor shall calibrate, commission, and check for correct operation of all instrument devices.

D. The contractor shall submit manufacturer's data or shop drawings of all items giving full information as to dimension, weight, materials, operating instruction, spare parts lists, and all other information pertinent to the acequency of the items.

E. The contractor shall provide an on-site data acquisition system for monitioring the performance of the field test (see Section 5.0).

2.5 Proof of Performance

EEA/EREDO and/or its appointed representatives reserves the right to witness inspection and performance tests for all hardware equipment at the manufacturer's (or contractor's) facilities prior to shipment. The Contractor shall provide 30 days notice of performance testing of components. The proposal should address this issue by explaining which component and which tests will be performed to assure reliable operational performance of components prior to shipment. This testing is the responsibility of the Contractor.

3.0 INSTALLATION

3.1 Equipment Shipment

Packing, insurance, freight and related charges to deliver all equipment items to the plant site is the responsibility of the Contractor. EEA/EREDO will assist the contractor in obtaining custom clearance.

The supplier shall send shipping documents, bill of lading, inspection certificates and other related documents to EEA/EREDO one month prior to the receipt of the equipment at Alexandria.

All equipment shall be packaged or boxed in clearly numbered cartons or boxes. A Box Contents List (BCL) shall be delivered to the USAID contracting officer with a copy to EEA/EREDO prior to the delivery of any equipment at Alexandria. This is in addition to Bill of Lading documents. The BCL shall identify the contents of each box by box number. Box numbers shall be grouped by subsystem. For example, solar arrays and related hardware are number series 200, flash steam system 300, and so forth. Prior to shipment, the tenderer should define in writing such equipment transport and receipt controls in similar detail as that provided above.

3.2 Plan and Schedule for Construction

The schedule for design, delivery and installation submitted in accordance with Section 2.1 shall include the number and skill level of laborers which will be employed; the duration of the work; and the plans for accomodations for both the labor force and the Contractor's personnel.

Within two weeks of EEA/EREDO approval of the final design the Contractor shall submit a "Plan and Schedule for Construction" to the USAID Contracting Officer for approval. The Contracting Officer will approve the Plan/Schedule, or recommend changes required for approval within two weeks of receipt in Cairo.

The EEA/EREDO reserves the right to periodically inspect all phases of the work in progress or after completion of the whole or any part thereof to insure that the work is performed in compliance with the terms of the contract. If EEA/EREDO determines that the work is not performed in accordance with the specifications, they reserve the right to require that the work be corrected or replaced if acceptable corrections cannot be made. Any part of the work that is redone shall be at the Contractor's expense. All work related records shall be available at all times for examination by the EEA/EREDO Contracting Officer. The Contractor shall provide all necessary facilities for such inspection during contractor's regular working hours. It should be clearly understood, except as otherwise provided, that such progress inspection shall not constitute acceptance by the Contracting Officer of any part of the work, but will be for the purpose of coordination and assistance in interpretation of specifications and technical requirements.

Within one month of system acceptance (see Section 7.0), the Contractor shall furnish a complete set of "as built" drawings incorporating all changes and corrections to the original system design incurred in the system installation. The "as builts" shall be modified original tracings. Changes and corrections so entered shall be indicated by a lettered circle, and noted as "As-Built" in the revision. In the case where no revisions or correction to an individual drawing were necessary, the notation "As-Built-No-Changes" shall be made directly below the revision block. Where several manufacturers' brands, types or clases of items listed have been used in the project, the

specific areas where each item was used shall be designated. Designations shall be keyed to the area and space designations on the contract drawings. Information shall be furnished, typewritten, for the listed materials. Copies of the "As-Built" drawings shall be given to the Contracting Officer.

3.3 Site Planning and Construction

The Contractor is encouraged to use local Egyptian labor and in-country fabrication of subsystems whenever possible. The proposal shall discuss the extent to which the proposed system can be constructed and installed by local labor using local materials should the system be replicated elsewhere in Egypt. The contractor shall indicate where this approach has been taken with this or similar equipment in other developing countries.

4.0 OPERATION AND MAINTENANCE

4.1 Schedule of Energy Production

The Contractor shall include in the proposal an "Energy Production Plan and Schedule". This document shall contain, but is not necessarily limited to, average daily energy supply and demand projections for twelve months of solar thermal collection and waste heat recovery systems. A complete description of how these projections were computed, including descriptions of any computer models used, is required. Input parameters to any model shall be shown. Planned scheduled outages during the upcoming year and planned changes in equipment, control mode, or operating characteristics significantly impacting the energy production of the system shall be given, if applicable.

4.2 Guarantee/Spare Parts Requirements

The contractor shall provide at least a 2 year guarantee on all parts from the time of EEA/EREDO system acceptance. An option for a 5-year guarantee shall be included as a separately costed option. The contractor shall separately cost an itemized list of spare parts that should be purchased by EEA/EREDO and made available to insure trouble-free operation for five years. Any specialized, custom manufactured tools or equipment required for operation and maintenance of the system shall be specified and provided by the contractor as part of the original contract (scope of supply).

4.3 Operations Support

The contractor is required to provide technical support of the operation of the system for a period of 2-years after system acceptance by EEA/EREDO. The contractor's proposal shall describe the level of

support offered, the procedures for management and control of the technical support and related support issues such as availability of spare parts, anticipated response time to a request for support, etc. This technical support shall be costed as a separate cost item in the contractor's cost proposal.

5.0 PERFORMANCE MONITORING

5.1 Field Test Data Acquisition System

The contractor shall provide an on-site data acquisition system (ODAS) for monitoring the performance of hardware installed for this field test. This requirement is in addition to any other requirement for system control instrumentation and instrumentation necessary for routine test and maintenance checks.

The ODAS will comply with the specifications listed in Appendix -C- of this statement-of-work and will monitor, as a minimum, the data parameters listed in Appendix -C-. The contractor will provide output ports and transducers to sample and measure each data parameter as specified in Appendix -C- and to insure compatibility with the data storage system proposed. The contractor will also provide a separate meteorological station to monitor data parameters as specified in Appendix -C-. The meteorological station will have its own data recording system that is compatible with the ODAS. If an exception must be taken to any of these requirements, the contractor will clearly note the exception and explain why the exception should be acceptable to the EEA/EREDO.

5.2 ODAS Installation and Training

The contractor will install the ODAS at the same time that the field test hardware is being installed. Training for Egyptian engineers and technicians in the installation and operation of the ODAS will be included in the on-the-job training program described in Section 6.0 of this statement-of-work.

The ODAS instrumentation and installation shall be a separate item in the cost proposal for this field test. The EEA/EREDO reserves the right to replace or modify the proposed ODAS during contract negotiation if required to maximize compatibility with other data collection, analysis and storage requirements of the REFT Project.

5.3 Log Sheets/Maintenance Records

The contractor shall develop, as part of the proposal, a log sheet of pertinent data that should be manually recorded on each major subsystem to document operations and maintenance history. The recommended frequency for maintenance of each item shall be stated. These logs/records should comply with the specifications outlined in Section 8.0.

7.0 SYSTEM ACCEPTANCE TEST CRITERIA

The Contractor shall include in his proposal a proposed Acceptance Test Procedure for "Point of Manufacture Testing" and "Field Acceptance Test" of the system and specific components. At a minimum it shall include the following:

7.1 Point of Manufacture Testing (PMT)

The Contractor shall detail in his proposal the procedures to be followed for the point of manufacture testing of the major equipment items. At a minimum this shall include: solar collectors, pumps, and controls. EEA/EREDO or their authorized representative shall have the right to attend and witness component and system performance testing at the manufacturer's plant prior to shipment. EEA/EREDO representatives attending the tests shall have the right to require measures and procedures necessary to ensure that tests comply with contractors proposed testing procedure specifications (Institute of Electrical and Electronic Engineering, American Society of Mechanical Engineers, etc.). PMT data and acceptance test certificates shall be assembled into usable formats to constitute baseline acceptance test data for the equipment. The signed (manufacturer) and countersigned (EEA/EREDO and/or representative) acceptance test certificates shall be considered part and parcel of the necessary shipping documents.

7.2 Field Acceptance Testing

The Contractor's proposal shall provide, in detail, performance guarantees and evaluation procedures for the system and its major components, whether supplied from the U.S. or made in Egypt. These shall include, as a minimum, the following:

- A solar array performance guarantee expressed, in part, as a curve guaranteeing the average daily output of the array as a function of the average daily insolation.

- Operating efficiency as a function of load over a sustained running time.

- Control system full operational performance.

EEA/EREDO and/or their authorized representatives shall participate in a 30-day acceptance test conducted by the contractor at the site. The contractor shall submit in the proposal the guaranteed solar array output. The EEA/EREDO, or its designated representative, will measure solar array operating conditions at a number of insolation levels throughout the 30-day acceptance test period. Calibrated pyranometers, curve tracers, and temperature measurement instrumentation will be used.

6.0 TRAINING REQUIREMENTS

The following training program and materials are required from the contractor for this project. These training programs fall into three general areas: classroom training in Cairo, in-factory training in the U.S. and on-the-job training at Heliopolis, Egypt. Training sessions and materials vary in content and presentation from informal "one-on-one" type instruction to more formal group "lectures and workshops". The sections below describe the training requirements. All training and materials will be written and conducted in English. All emergency startup and shut-down procedures must be provided in both English and Arabic.

6.1 Operator Training Program

Formal classroom training will be given in Cairo for EEA/EREDO and General Poultry engineering, operating, and maintenance staff in the design of the Solar IPH and Waste Heat Recovery Systems. This training is anticipated to be for 20 hours (5 days, 4 hours per day) and intended to provide the EEA/EREDO and General Poultry staff with an understanding of the engineering parameters, design process, and decisions which resulted in the final design of the system. This training will be conducted at the start of the installation work and is not intended to require separate dedicated travel to Cairo.

As part of this proposal, the Contractor shall develop a syllabus that briefly summarizes topics and content of the classroom design training program.

6.2 Maintenance Training Program

Formal classroom training will be given in Cairo for selected EEA/EREDO and General Poultry engineering, operating and maintenance staff in the operation, maintenance and repair of the system and individual components. The training is anticipated to be for 20 hours (5 days, 4 hours per day). The training will utilize the actual working drawings for this project to cover such topics as installation procedures, specifications, contruction schedule and labor requirements. This training is intended to familiarize EEA/EREDO and General Poultry staff with the details of the installation as well as the project management aspects of the project. System installation will begin as soon as possible following this training and the operator training program (Section 6.1).

The Contractor is required to operate the Solar Thermal IPH and Waste Heat Recovery Systems for a period of 30 days after the system is designated as operational by the EEA/EREDO. During this time period the contractor shall provide an on-the-job training program in the operation, maintenance and repair of the system and equipment components. The training program shall consist of a minimum of 20 hours of on-site formal classroom training and 140 hours of on-the-job (OJT) field training. As part of the proposal the contractor shall develop a syllabus for the on-site training program that briefly summarizes the topics, operating and maintenance procedures which will be taught.

It is assumed that the OJT field training will consist of selected EEA/EREDO and General Poultry personnel accompanying the contractor personnel during normal daily operational tasks. The contractor shall briefly describe, as part of this proposal, the itinerary of the Solar Thermal IPH and Waste Heat Recovery operating personnel over an average day. The itinerary should take into account the demonstration nature of this field test, i.e., the Egyptian engineer must understand the function and operation of any specialized equipment and instrumentation.

6.3 In-Factory Training Program

The Contractor is required to provide and/or coordinate in-factory training on the operation, maintenance and repair of the Solar Thermal IPH and Waste Heat Recovery systems and major equipment components. This training is anticipated to take place at the respective manufacturer's facilities for the following components: solar array, flash steam tanks and condensate return systems. The training should be both classroom and "hands-on". The total number of training days is not expected to exceed 20 days covering all subsystems. All expenses for the visiting engineers are the responsibility of EEA/EREDO. As part of this proposal, the contractor shall develop a syllabus for the in-factory training and suggested itinerary for the program.

8.0 OPERATION AND MAINTENANCE MANUALS

The contractor shall provide manual(s) prepared to the minimum content listed below. The manual is to be used for operation, maintenance, repair and logistic support for the Solar and Waste Heat Recovery Systems. All manuals shall be delivered to EEA/EREDO for review at least 30 days prior to the arrival of equipment at the site. All manuals shall be in English. Manual(s) will be revised as needed and a final set submitted no later than 30 days after the completion of the 30-day acceptance testing period. The minimum requirements for the manual(s) shall include chapters on the folowing subjects:

8.1 System Description

This chapter shall include but not be limited to the following:

- a full page composite illustration of the Plant equipment and layout
- an illustration(s) calling out the major assemblies
- a basic description of the type of equipment and its purpose
- a function block diagram
- tables listing equipment supplied and equipment required but not supplied, if any
- tables of technical, environmental and physical characteristics, as appropriate

8.2 System Installation

This chapter shall include:

- information on unpacking and proper location of equipment
- interconnections and initial pre-operational adjustments
- details of structure, cables and foundation requirements (as applicable)

- operating ranges (voltage, current for each equipment item and system)

8.3 System Operation

This chapter shall include:

- step-by-step procedures for starting, operating and stopping the equipment

- meter readings and/or results expected from properly adjusted and operated equipment

- tables and illustrations calling out all operational controls and indicators and their functions (all references to controls and indicators throughout the manual shall follow these designations)

- means for setting array tilt angle

8.4 Principals (or Theory) of Operation

This chapter shall include:

- a functional description of the equipment, based on a block diagram

- for complex mechanical features, a complete explanation, using block diagrams, exploded views of cutaway drawings

- major assemblies broken into individual circuits, accompanied by complete circuit analysis keyed to simplified schematic

- brief description of conventional circuits

- detailed descriptions of complex and novel circuits

- typical daily power, load, and state of charge curves for each component

8.5 Maintenance (Preventive/Corrective)

This chapter shall include:

- a maintenance schedule for all equipment including adjustments and procedures

- list of recommended test equipment

- lubrication data
- information that permits a technician to locate trouble and to make replacements, repairs or adjustments to the equipment
- for complex equipment or where the procedure is not obvious, an outline of disassembly and reassembly procedures
- details of special test procedures
- complete adjustment and maintenance information for relays and other electro-mechanical devices
- list of tools required for maintenance

8.6 Parts List

The parts list shall consist of a tabulation of descriptive data on all electrical components and repairable/replaceable commercial or vendor mechanical components in the equipment. All parts shall be sufficiently described to implement reorder/replacement. The parts list shall contain at least the following information:

(a) Reference designation

(b) Name and description of part

(c) True Manufacturer's code and part number (and list manufacturer's codes and addresses)

(d) Quantity

8.7 Drawings

In addition to drawings previously specified, the following shall be included:

(a) Schematic diagrams of individual major components, printed wiring boards and, where applicable, the certified equipment drawings

(b) Logic diagrams

(c) Interconnection diagrams

(d) Cabling diagrams

(e) Wiring diagrams

9.0 SPECIAL PROVISIONS

9.1 Site Access and Local Labor

Employees and representatives of the Contractor and personnel conducting business with the Contractor relating to the Contract, will be granted a revocable permit to enter the General Poultry plant for the purpose of installation, operation, and/or maintenance of the facilities and equipment under this Contract. Access to and movement within this area is subject to restrictions and provisions of the security instruction in effect.

It is the Contractor's responsibility to maintain satisfactory labor relations with his employees. Representatives of the Contracting Officer will not participate in labor relations matters unless disputes develop that interfere with the proper performance of the contract, at which time the representative may endeavor to assist in settling the difficulty. The Contractor is encouraged to hire local labor whenever possible.

9.2 Protection of the Environment and Personnel

During all operations, all EEA/EREDO and local environmental and labor requirements shall be rigorously observed. The EEA/EREDO will retain the right to suspend any operation judged to present an imminent threat to the environment or personnel, or a violation of applicable labor laws and regulations or natural resources management agreements, after giving notice to the contractor.

9.3 Public Release of Information

There shall be no public release of information or photographs concerning the aspects of this Contract or other documents resulting from this Contract without prior written approval of the EEA/EREDO.

9.4 Pre-Award Survey

The EEA/EREDO may make a pre-award survey of the facilities of any apparently successful bidder to determine whether or not such bidder is adequately qualified to perform the requirements of any Contract that may be awarded on the basis of this specification. Investigation may be conducted to determine that the Contractor does regularly engage in the performance of work of the type covered by the specification and has a satisfactory record of performance in this field. The bidder is required to submit information, as well as any other related material, requested by EEA/EREDO audit agencies during the course of the preaward survey.

9.5 Minimum Proposal Requirements

The contractor is required to submit as part of the proposal the following:

9.5.1 Organization Chart. Show the organization for accomplishing and managing the project. Explain briefly the responsibilities of each element shown on the organizational chart. Identify key personnel by name in each element and submit their curriculum vitae (resumes). Show the lines of authority within the organization. If important portions of the project are to be subcontracted (e.g., design of the system), identify the subcontracted function, the subcontractor(s), the subcontractor(s) key personnel, and which elements of the organization will manage the subcontract(s).

9.5.2 Key Personnel and Resumes. Provide resumes of key personnel, including those of the subcontractor(s). Be explicit in identifying past training and experience of each individual which qualifies him/her for the position to be held in the organization.

9.5.3 Staffing Plan. Indicate the type and approximate number of skilled personnel required in each element of the organization chart. State whether or not the required personnel are available within the organization. If not, comment on the availability of needed skilled personnel within the labor force and outline a schedule and plan for recruitment and/or training.

9.5.4 Related Experience. For each of the categories of experience below, list and describe projects or contracts which have provided your firm or that of your proposed subcontractor with related, qualifying experience. The descriptions should include: (1) dates during which the work was accomplished; (2) the scope and price of the total project or contract; (3) statement of what portion of the total project or contract was accomplished by your firm, i.e., an explicit description of the responsibilities or role of your firm; (4) financing arrangements; (5) references; (6) approximate payment for your service; (7) number of similar projects, location and contact person.

9.5.5 Construction Projects. List and discuss projects or contracts providing experience in the construction of facilities, particularly those using Solar IPH/Waste Heat Systems.

9.5.6 Operation and Maintenance of Solar IPH/Waste Systems. List and discuss projects or contracts providing experience in the operation and/or maintenance of Solar IPH/Waste Systems.

For each of the items listed, state which of the following functions were the responsibility of your firm; (a) start-up of facilities; (b) operation of facilities; (c) routine maintenance; (d) periodic overhaul of facilities. Also state, what type of facilities were included; (e) solar thermal systems; (f) controls; (g) electrical switchgear and protection equipment; (h) other. If "other" is listed, please identify or explain.

9.6 Post-Award Site Visit

Upon contract award, winning contractor personnel are expected to inspect the Heliopolis site to satisfy themselves as to all general and local conditions that may affect the design and installation of the Solar IPH/Waste Heat Systems. EEA/EREDO, and/or authorized representative personnel, will be available at that time for detailed discussions prior to initiation by the contractor of detailed system design.

9.7 Summary of Deliverables

9.7.1 Contract Documentation Schedule

	ACTIVITY	WEEKS AFTER CONTRACT AWARD*
(a)	Project Schedule	2
(b)	EEA/USAID Approval of Project Schedule	5
(c)	Detailed Design Complete	16
(d)	EEA/USAID Design Review Complete (Authorization to proceed)	20
(e)	Written Results of Component/Subsystem In-Factory Testing	Within 2 weeks of test completion
(f)	System Operations and Maintenance Manuals	Within 4 weeks of system acceptance
(g)	Unscheduled Maintenance Reports	As required to document unscheduled maintenance throughout the 2-year support period

9.7.2 Contract Hardware Installation Schedule

(a) Site Preparation Complete, Hardware Delivered (D) to Site ..... Day 0 (D)

(b) Construction Completed, Solar Thermal IPH, and Waste Heat Recovery Interconnected with the Existing Facility ..... D + 120 days

(c) System Acceptance Test Complete ..... D + 150 days

(d) Final System Drawings and System Operations and Maintenance Manual Submitted ..... D + 180 days

In this schedule, one week is allowed for transmittal and receipt of documents mailed from either the United States or Cairo.

Appendix -A-

Proposed Process Flow Diagram

Proposed Flow Diagram

The Flow Diagram M-1, indicate the proposed process flows, pressures, temperatures, and relationships to the system described by this Statement of Work, SOW.

The following list describes the Flow Diagram streams.

(1) Poultry In - the poultry supplied to the scalder for processing

(2') Poultry Out - the poultry solids coming out of the scalder

(2") Poultry Water Out - the water carried in the feathers of the poultry

(3) Rendering In - the poultry solids from the processing to the rendering cooker.

(4') Vapor Out - the process vapor released from the rendering cooker

(4") Vapor Out - the vapor released from the rendering cooker to the preheater from the dead poultry (DOA)

(5') Processed Poultry to Packaging - the poultry that has been processed and is ready for packaging

(5") Process Water to Drain -

(6) Poultry DOA - the poultry that dies before arriving at the plant site

(7) Rendering Out - the solid waste from the rendering cooker

(8) Rendering Condensate Out - the high pressure vapor exiting the rendering cooker to the flash tank

(9) Flash Steam - the flashed steam from the rendering cooker condensate

(10b) Batch Make Up Water - the daily refill water from the solar system to refill the scalder before the start of each process day.

(10c) Continuous Make Up Water - the water from the solar system required to maintain the level in the scalder during a process day.

(11) System Out - the steam produced at 8 bar by the boiler delivered to the scalder and rendering cooker

(12) Steam to Scalder - the portion of steam produced by the boiler that is reduced to 1 bar pressure and delivered to the scalder.

(13) Condensate Out - the condensed steam out of the scalder.

(14) Make Up - the water that is returned to the boiler as make up for losses.

(15) Low Pressure Condensate - the condensed steam from the scalder and returned to the make up tank

(16) Not used

(17) Flash Condensate - the water condensed from the rendering cooker steam and returned to the make up tank

(18) Make-up Steam to Scalder

(19) Make Up Water In - water supplied to the solar system to make up for system losses

(20) Not used

(21) Evaporation Losses - the losses in the scalder due to evaporation

(22) Radiation Losses - the losses in the scalder due to radiation

(23) Fill Water Out - the water dumped out of the scalder at the end of a process day

(24) Steam In - the steam supplied to the rendering cooker by the boiler at 8 bar

(25) Radiation Losses - the losses in the rendering cooker due to radiation

(26) Fuel Used - the fuel consumed in the production of the steam required

(27) Burner Losses - the losses due to burner inefficiency

(28) Other Losses - the losses due to radiation and distribution inefficiencies

(29) Steam In - the steam supplied to the deaerator to maintain the required temperature

(30) Other Losses - the losses from the deaerator due to radiation

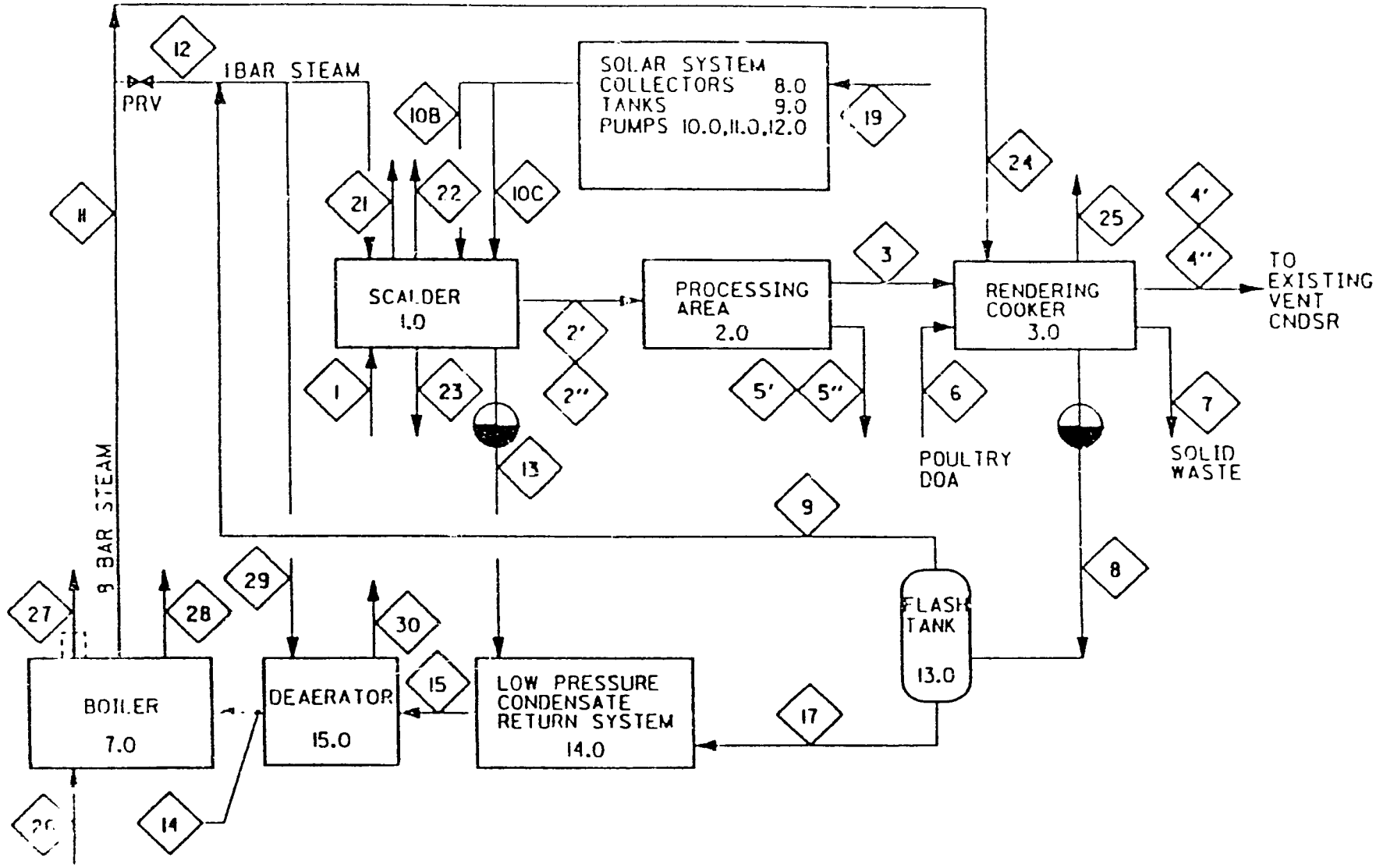

PROPOSED FLOW DIAGRAM FOR GENERAL POULTRY COMPANY

EXHIBIT 5-3

LOCKWOOD GREENE

FLOW DIAGRAM
GENERAL POULTRY COMPANY

GENERAL POULRTY MWJPAC

EXISTING MWJPAC01 DESCRIPTION	BIRDS IN	BIRDS OUT	H2O W/ BIRD	BIRDS TO RENDER'G	H2O TO VENT COND	H2O TO VENT COND	PROCESSED BIRDS	H2O FROM BIRDS	DOA BIRDS
LOCATION	1	2'	2''	3	4'	4''	5'	5''	6
M (LB/HR)	39,690	39,690	7,144	9,923	[illegible],442	1,034	29,768	7,144	1,378
T (DEG F)	97	115	140	115	212	212	115	140	70
PRESSURE(PSIG)									
H (BTU/LB)	52	66	108	66	1,150	1,150	66	108	30
Q (BTU/HR)	2,063,880	2,635,416	771,574	658,854	8,558,156	1,188,633	1,976,562	771,574	4[illegible],895

GENERAL POULRTY MWJPAC

EXISTING MWJPAC01 DESCRIPTION	SOLIDS FRO COOKERS	COND COOKERS	LP STM FR F T'K	FILL H2O	MAKE-UP H2O	STM FROM BOILERS	STM TO SCALDER	COND FROM SCALDER	H2O TO MAKE-UP	LP COND TO DEAIR
LOCATION	7	8	9	10B	10C	11	12	13	14	15
M (LB/HR)	2,825	12,297	N/A	7,166	7,482	14,032	1,736	1,736	14,032	N/A
T (DEG F)	347	347	N/A	72	72	347	250	250	72	N/A
PRESSURE(PSIG)		115	N/A	ATM	NR	115	15	15	NR	N/A
H (BTU/LB)	252	319	N/A	40	40	1,193	1,193	219	40	N/A
Q (BTU/HR)	711,939	3,922,888	N/A	286,650	299,287	16,740,623	2,070,508	380,251	561,295	N/A

GENERAL POULRTY MWJPAC

EXISTING MWJPAC01 DESCRIPTION	BOILER FEED	F. TANK COND	MAKE-UP STM TO SC	H2O TO SCALDER		SCALDER V LOSSES	SCALDER R LOSSES	SCALDER DRAIN	STM TO COOKER	LOSSES COOKER
LOCATION	16	17	18	19	20	21	22	23	24	25
M (LB/HR)	14,032	N/A	1,736	14,648	DELETED	(338)	0	(7,166)	12,297	0
T (DEG F)	72	N/A	347	72	DELETED	140	140	140	347	347
PRESSURE(PSIG)	115	N/A	15	NR	DELETED	NR	ATM	ATM	115	
H (BTU/LB)	40	N/A	1,192	40	DELETED	108	NR	108	1,193	NR
Q (BTU/HR)	561,295	N/A	2,068,252	585,937	DELETED	(36,500)	(122,630)	(772,955)	14,6[illegible],115	([illegible])

84208.02

8573[illegible]

GENERAL POULRTY MWJPAC

EXISTING MWJPACC1 DESCRIPTION	FUEL TO BOILER	STACK LOSSES	BOILER RAD LOSSES	dQ1.0 BTU/HR	dQ3.0 BTU/HR	dQ7.0 BTU/HR
LOCATION	26	27	28			
M (LB/HR)	NR	0	0	(1,690,258)	(10,733,777)	(21,575,134)
T (DEG F)	NR	NR	NR			
PRESSURE (PSIG)	NR	NR	NR			
H (BTU/LB)	NR	NR	NR			
Q (BTU/HR)	21,575,134	(4,044,832)	(1,350,974)			

84208.C1

R.173/9.dt

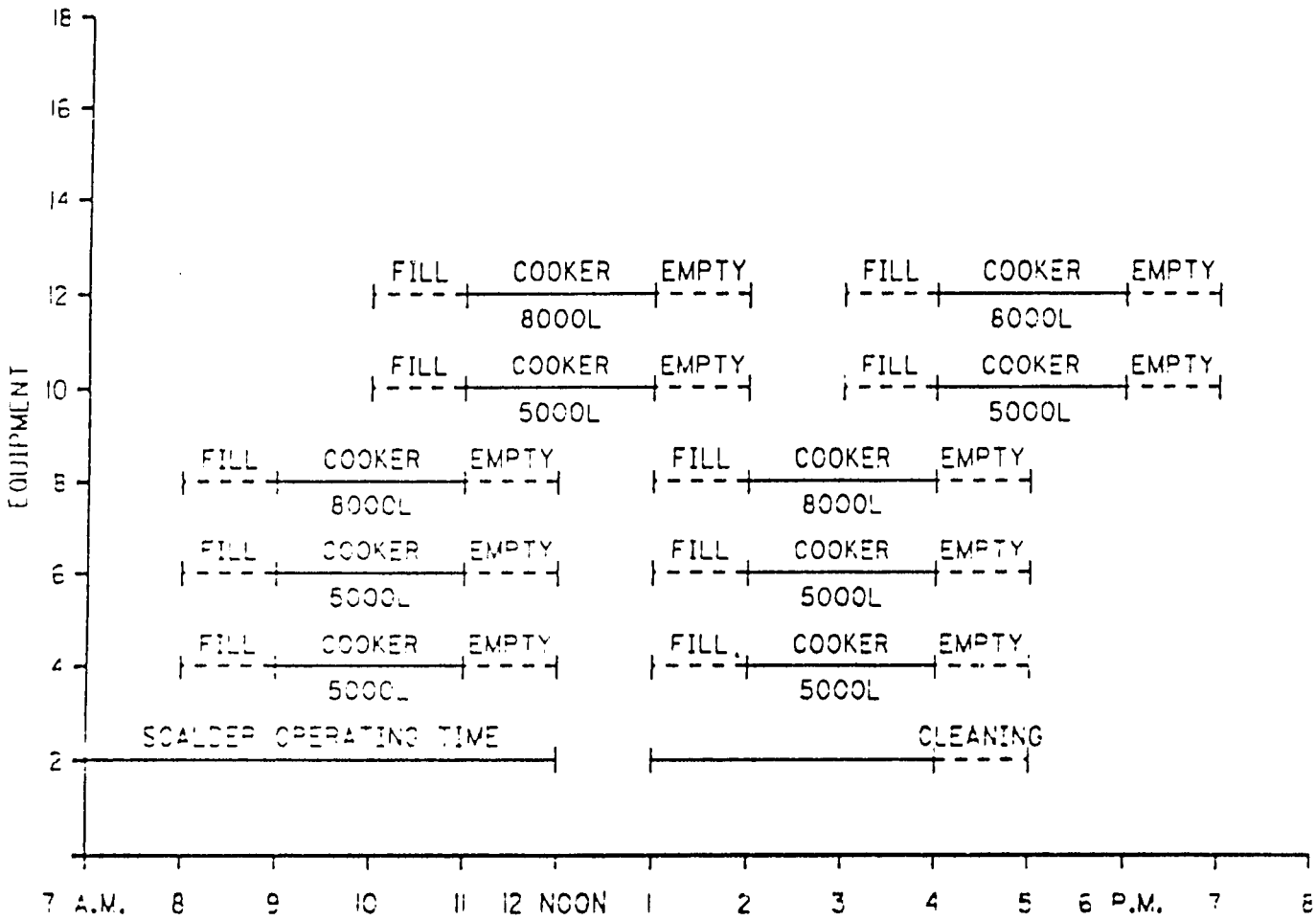

SCALDERS & RENDERING COOKERS SCHEDULE

Appendix -B-

nsolation Data: Cairo, Egypt

51

A Summation of the Daily Total Solar Radiation Received on Surfaces of Variou
Orientations in cal/cm^2

Month	Normal	Horiz.	South	North	East	West
Jan.	720	360	485	44	215	215
Feb.	752	435	440	49	250	250
March	796	523	350	56	273	273
April	830	600	226	65	275	275
May	863	650	150	106	288	288
June	864	662	115	130	295	295
July	858	650	130	116	288	288
Aug.	828	610	190	80	285	285
Sep.	790	546	293	59	270	270
Oct.	714	438	385	51	240	240
Nov.	672	361	452	45	216	216
Dec.	660	330	466	42	202	202
Annual	779	514	306	70	258	258

Data Supplied by EEA/EREDO

Appendix -C-

Field Test Data Acquisition System

SPECIFICATIONS FOR A

FIELD TEST ONSITE DATA ACQUISTION SYSTEM (ODAS)

The Renewable Energy Field Test instrumentation system will be used to monitor IPH, PV and wind energy system installation at urban and remote desert locations in Egypt. These energy systems include main power sources (solar collectors, PV arrays and wind turbines) as well as ancillary subsystems depending on specific field test applications. These subsystems include the solar array, solar storage, solar circuilation, solar distribution, meteorologicl data and a variety of waste heat characteristics.

The on-site data acquisiton must be a stand-alone system. Failure of the system must not affect the performance of the field test system that is being monitored. The ODAS must have an on-site data storage system that is non-volatile and capable of easy physical removal and transport to another location for data removal and long-term storage. One form of the non-volatile storage system must be microchip/ EPROM or CMOSRAM - Type system that can be "milked" on site easily and without danger of a loss of data.

The OSDA must be a microprocessor based data logger with programmable input channels and output formats both analog and digital. The user must have control over sampling frequency and output period for each channel. The capability to multiplex some of the channels is also required. Primary design objectives for the OSDA system should be reliability, simplicity, small size, low power and the ability to operate in environmental extremes as specified (especially high temperature, and sand/dust). The unit must be capable of stand-alone battery operation for a period of at least one month, preferably for two months.

The following minimum specifications are required for the OSDA. If an exception must be taken to one or more of these requirements, the exception shall be noted and a clear explanation given as to why the bidder believes that the exception should be acceptable to the purchaser.

System Power Requirements

- o Capable of operation using self-contained batteries
- o Capability of the use of an external power source to allow continued data collection while changing batteries is desirable
- o Capable of transient protection from spurious electrical charges or lightning.

Environmental Specifications

- o Ambient Temperature: -5° C to +55° C
- o Relative Humidity: 0 to 95 percent non-condensing
- o Impervious to airborne sand/dust.

Analog Inputs

- o Number of channels: At least 12 channels
- o Voltage Measurement Types: Differential or single-ended
- o Accuracy of Measurements: at least ± 0.5 percent

- Range and Resolution: Selectable for any input channel from microvolts to several volts full scale

- Sample Rates: At least once per second for each channel

- Multiplex Capability: at least four channels

Pulse Inputs

- Number of Pulse Counter Channels: at least 4 channels

- Analog and Digital Control Outputs: a total of three resettable channels each is desired with a range of 0 to +/- 5 volts with a 0.5 volt resolution

- Multiplex Capability: at least three channels

Output Signal Interface

- Memory: Capable of storing at least 3000 data points per day for a period of two months

- Display: A visual display of instantaneous stored data is required on-site for data verification before data removal

- Peripheral Interface: Downloading of data at the site should be by physical removal of the data storage device or simple, reliable data downloading to a non-volaile storage device. Storage data files shall be IBM-PC compatible on floppy disc either directly from the data logger or through a simple, fast, reformatting techique.

FIELD TEST PERFORMANCE DATA REQUIREMENTS

Field Test #3 Solar Industrial Process Heat General Poultry

CSDA	Parameter	Channel Type	Output Interval
T-1	Make-up Water to Solar Storage Tank - Temperature	A	10 min
F-2	Solar Collector (8.0) Inlet - Flowrate	P	10 min
T-3	Solar Collector (8.0) Inlet - Temperature	A	10 min
T-4	Solar Collector (8.0) Outlet - Temperature	A	10 min
T-5	Solar Storage Tank Temperature	A	10 min
F-6	Solar Heated Water to Scalder - Flowrate	P	10 min
T-6	Solar Heated Water to Scalder - Temperature	A	10 min
F-7	Low Pressure Condensate Return System 14.1 - Flowrate	P	10 min
T-8	Low Pressure Condensate Return System 14.1 - Temperature	A	10 min
F-9	Low Pressure Condensate Return System 14.2 - Flowrate	P	10 min
T-10	Low Pressure Condensate Return System 14.2 - Temperature	A	10 min

T-11	Steam Flash Tank 13.0 Temperature	A	10 min
F-12	Steam Flash Tank 13.0 Condensate Outlet Flowrate	P	10 min
F-13	Steam Flash Tank 13.0 Pressure	A	10 min
F-14	Steam Flash Tank 13.0 L.P.S. Outlet - Flowrate	A	10 min
F-15	Plane of Array Insolation	P	10 min
T-16	AMB DRY BULB Temperature	A	10 min
T-17	AMB WET BULB Temperature	A	10 min
P-18	Barometeric Pressure	A	10 min
F-19	Wind Velocity	P	10 min
F-20	Wind Direction	A	10 min
E-21	Watt-hour Meter		

Appendix -D-

Simplified Process and Instrument Diagram

Simplified Process and Instrument Diagram

Using the proceeding Flow Diagram, with the mass and heat balance (Appendix -A-), the Simplified Process and Instrument Diagram was developed.

The Simplified Process and Instrument Diagram, indicates the existing and new equipment, with representative instrumentation sensing points identified.

The sextet symbol represents a mechanical "tie-in" location to the existing system. The host client must provide the "tie-in" and an isolation valve.

In addition to the mechanical "tie-in" the host client must provide electrical power to a central junction box.

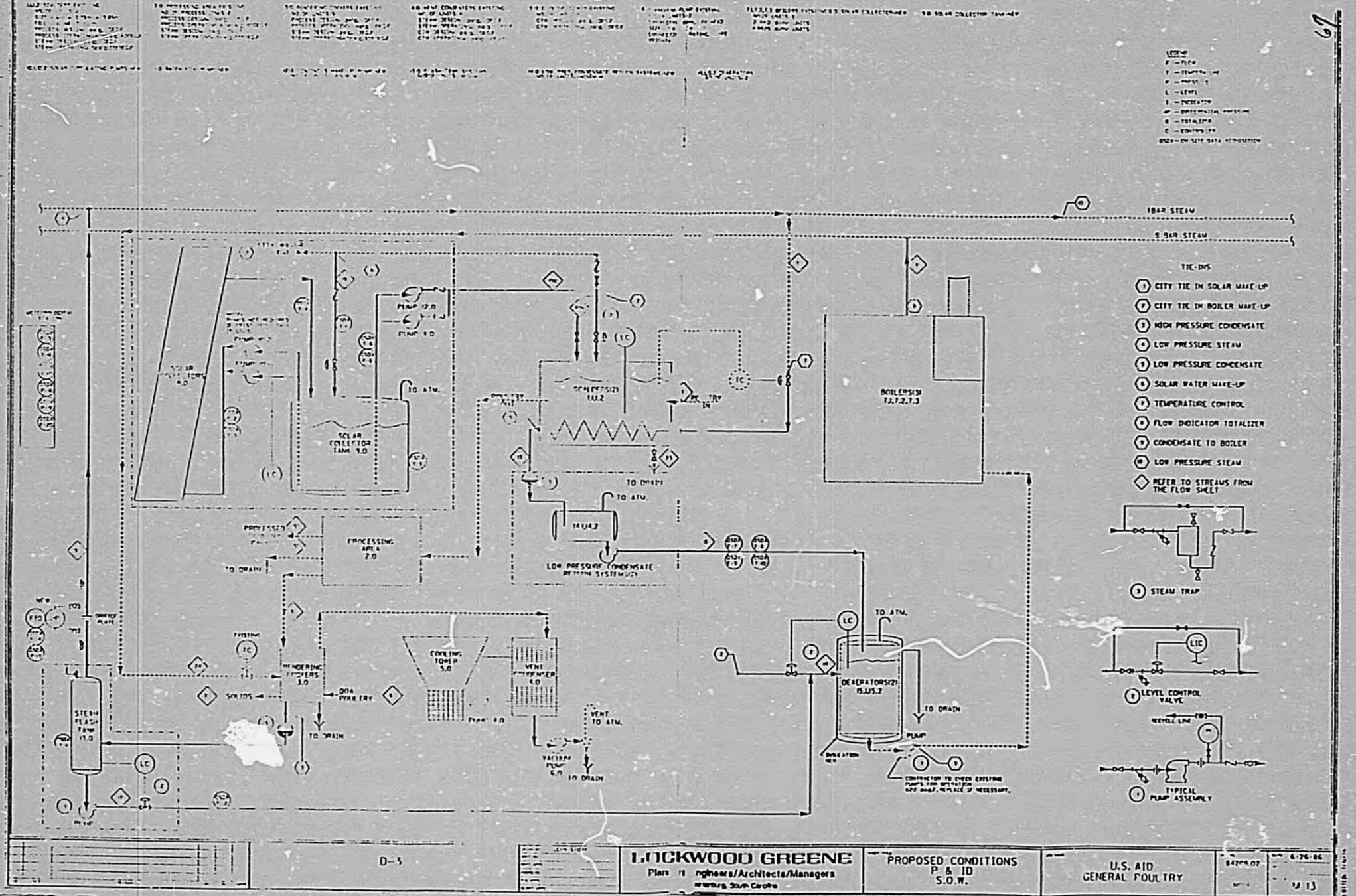

D-3

LOCKWOOD GREENE
Plans & Engineers/Architects/Managers
Spartanburg, South Carolina

PROPOSED CONDITIONS
P & ID
S.O.W.

U.S. AID
GENERAL POULTRY

84299.07

6-26-86

9 of 13

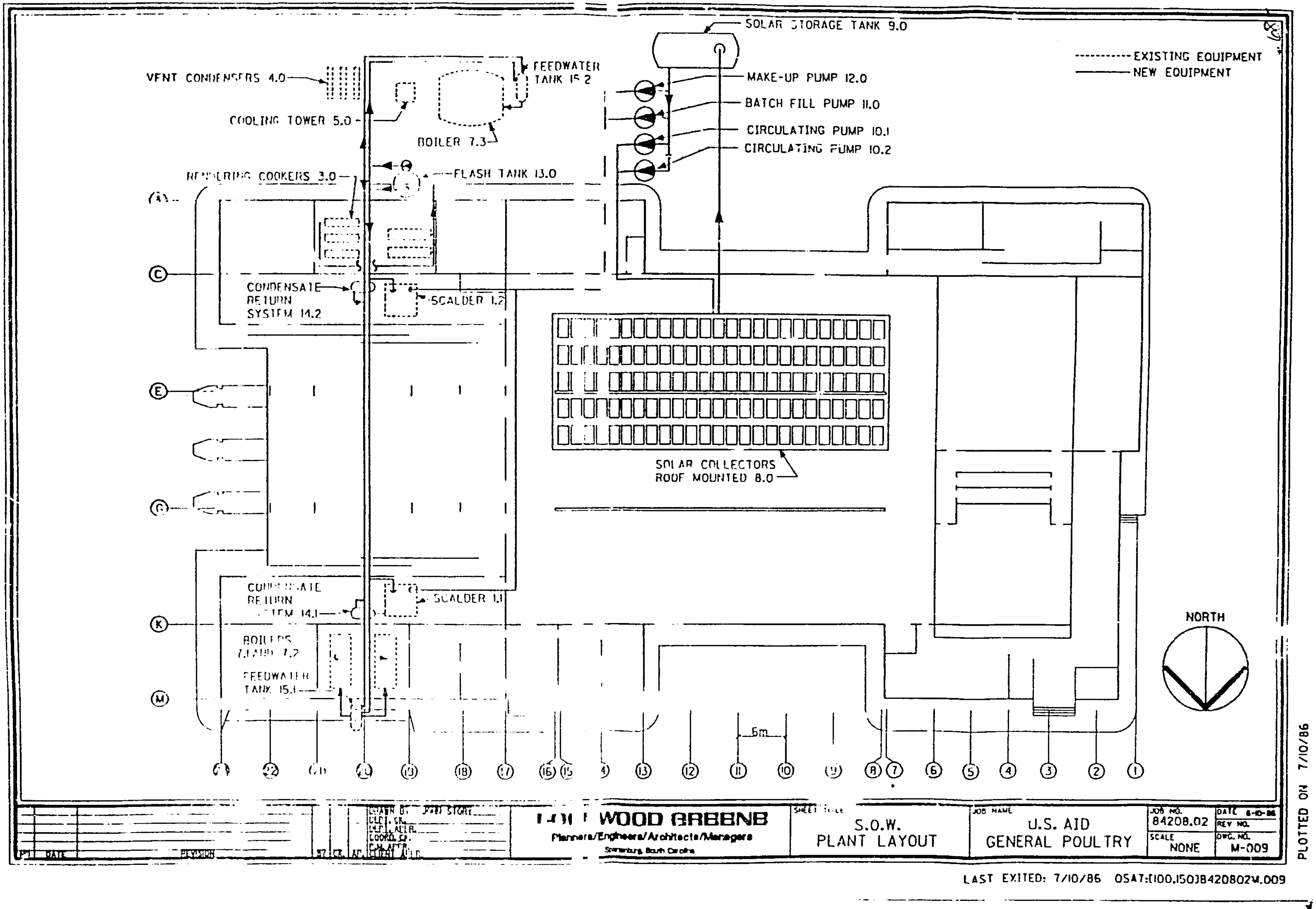
SOLAR STORAGE TANK 9.0
EXISTING EQUIPMENT
NEW EQUIPMENT
VENT CONDENSERS 4.0
FEEDWATER TANK 15.2
MAKE-UP PUMP 12.0
BATCH FILL PUMP 11.0
COOLING TOWER 5.0
BOILER 7.3
CIRCULATING PUMP 10.1
CIRCULATING PUMP 10.2
FLASH TANK 13.0
CONDENSATE RETURN SYSTEM 14.2
SCALDER 1.2
SOLAR COLLECTORS ROOF MOUNTED 8.0
SCALDER 1.1
BOILERS
FEEDWATER
NORTH
6m
S.O.W. PLANT LAYOUT
U.S. AID GENERAL POULTRY
84208.02
NONE
M-009
PLOTTED ON 7/10/86
LAST EXITED: 7/10/86 OSAT:[100,150]8420802M.009

Appendix -E-

Plant Layout

ARCHITECTS-ENGINEERS
NEW YORK - SPARTANBURG - ATLANTA - DALLAS

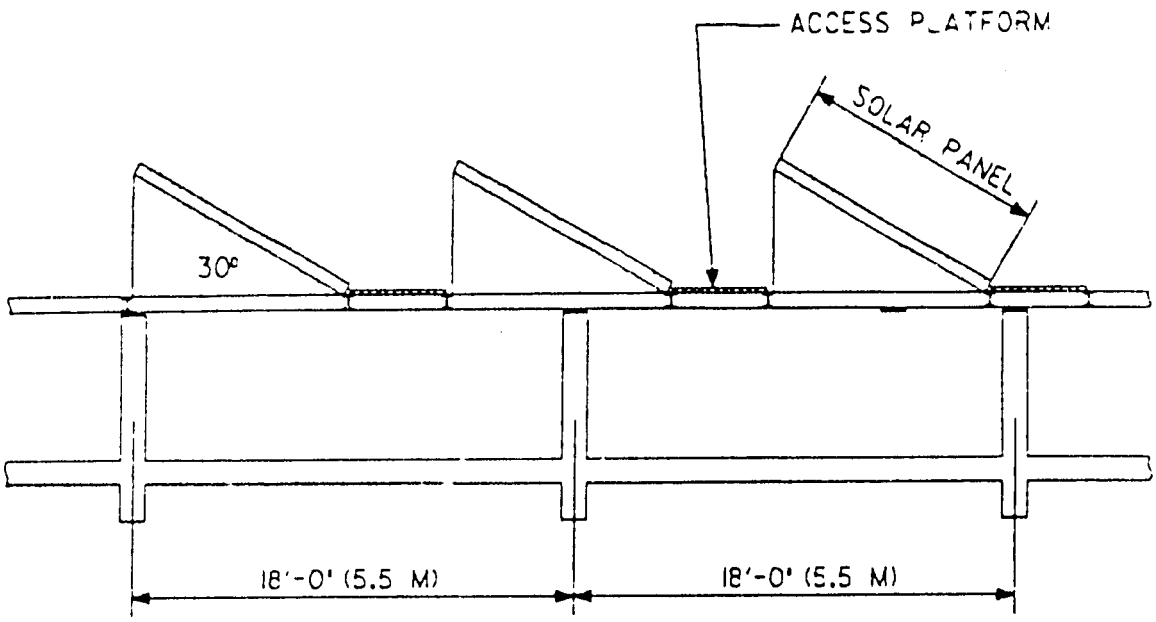

SECTION

SCALE: 1/8" = 1'-0"

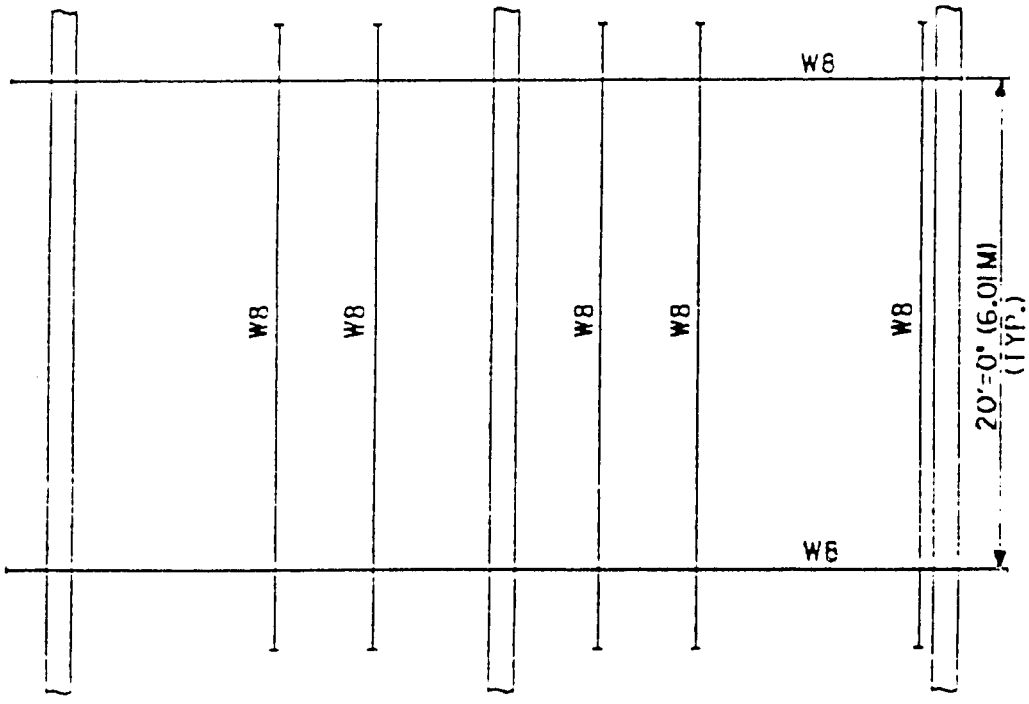

PLAN

SCALE: 1/8" = 1'-0"

EXHIBIT 5-6 TYPICAL SOLAR SUPPORT FRAMING	U.S. AID GENERAL POULTRY	

QST2000, 5038-0[illegible]

10

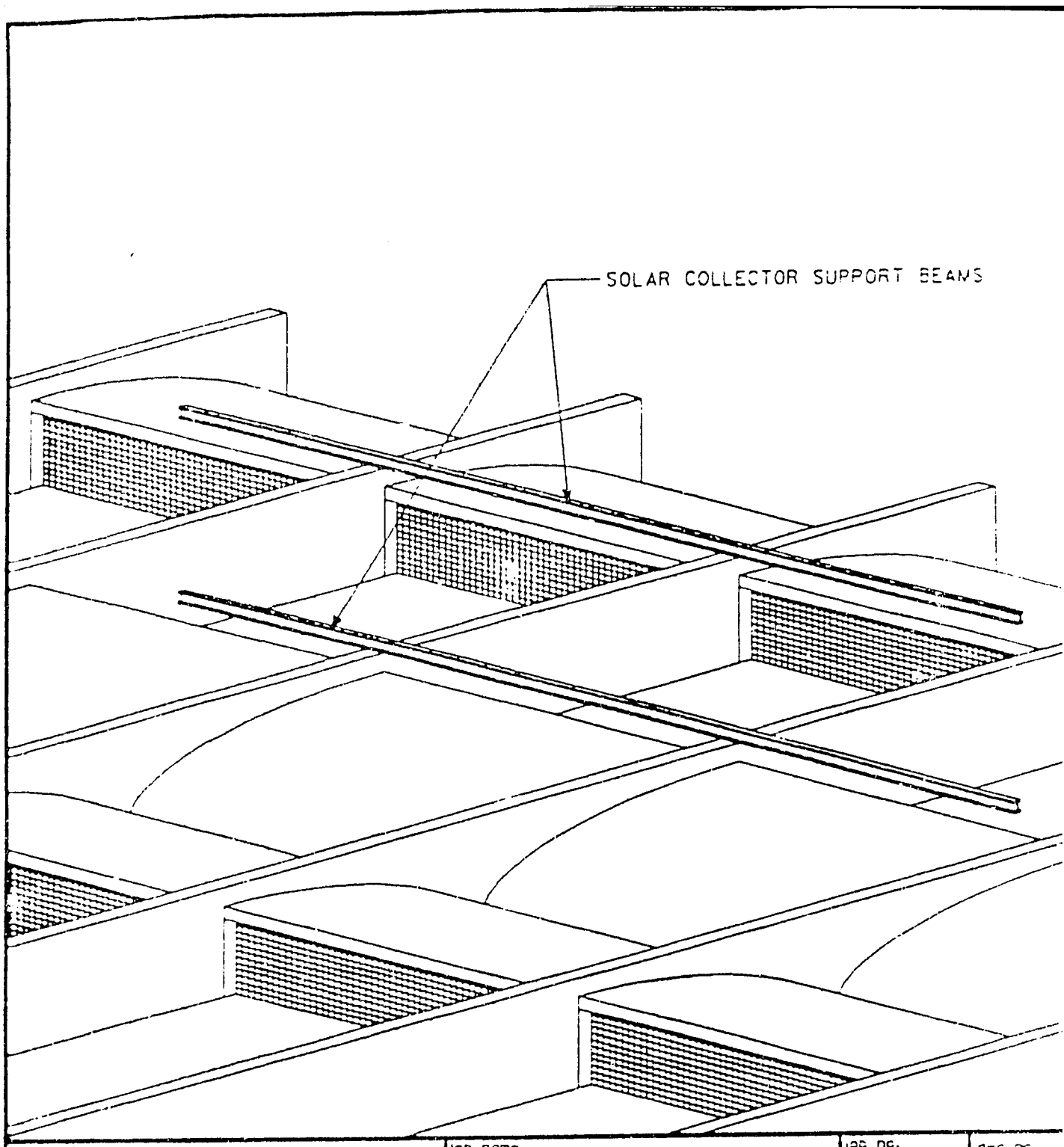

sheet title	job name	job no.	dwg. no
TYPICAL SOLAR SUPPORT FRAMING	U.S. AID GENERAL POULTRY	date	

84208.02
R573/9.dt

Appendix -F-

FCHART-4R Results

```
****************************
** FCHART-4R VERSION 2.00 **
****************************
```

PROJECT: General Poultry
COMMENT: Application Review-Final

DATE: 04/03/85
FILE NAME: MWJPAC

THERMAL DATA

GENERAL INFORMATION:

1	SYSTEM TYPE (1-5) 1 = DHW-1TANK 4 = DHW-PREHEAT-LOADSIDE HX 2 = DHW-2TANK 5 = CONSTANT TEMP-COLLECTOR ONLY 3 = PROCESS HEAT	2.00
2	ECONOMICS (1=YES; 2=NO, 3=ECONOMIC ONLY)	2.00
3	COLLECTOR AREA OPTIMIZATION (1=YES; 2=NO)	2.00
4	CITY NUMBER	262.00

COLLECTOR AND COLLECTOR HX:

11	COLLECTOR AREA	4000.00	SQFT
12	FR-UL PRODUCT	0.72	BTU/SQFT-HR
13	FR-TAU-ALPHA PRODUCT	0.76	
14	INCIDENT ANGLE MODIFIER CONSTANT	0.17	
15	COLLECTOR TILT ANGLE	45.00	DEGREES
16	COLLECTOR AZIMUTH (SOUTH=0, EAST=-90, WEST=+90)	0.00	DEGREES
17	COLLECTOR HX EFFECTIVENESS	1.00	
18	COLLECTOR LOOP FLOW RATE	14.70	LB/HR-SQFT
19	COLLECTOR-STORAGE LOOP FLOW RATE	14.70	LB/HR-SQFT
20	SPECIFIC HEAT OF COLLECTOR FLUID	1.00	BTU/LB-F
21	SPECIFIC HEAT OF SOLAR TANK FLUID	1.00	BTU/LB-F
22	UA OF COLLECTOR INLET PIPE	0.50	BTU/HR-F
23	UA OF COLLECTOR OUTLET PIPE	0.50	BTU/HR-F
24	GROUND REFLECTANCE	0.20	
25	COLLECTOR TEST FLOW RATE	33.74	LB/HR-SQFT

SOLAR STORAGE TANK:

31	SOLAR STORAGE CAPACITY	1.50	GAL/SQFT
32	SOLAR TANK HEIGHT-DIAMETER RATIO	2.00	
33	SOLAR TANK U-VALUE	0.10	BTU/HR-SQFT
34	SOLAR TANK ENVIRONMENT TEMPERATURE	70.00	DEG F

AUXILIARY STORAGE TANK:

41	AUX TANK OVERALL UA	0.00	BTU/HR-F
42	AUX TANK ENVIRONMENT TEMPERATURE	0.00	DEG F

DHW LOAD INFORMATION:

51	WATER HEATER USAGE	12718.00	GAL/DAY
52	WATER HEATER SET TEMPERATURE	140.00	DEG F
53	WATER SUPPLY TEMPERATURE (-1000 SETS TO GND TEMP)	-1000.00	DEG F

PROJECT: General Poultry
COMMENT: Application Review-Final

DATE: 04/03/86
FILE NAME: MWJPAC

ENVIRONMENTAL DATA AND THERMAL PERFORMANCE

ENVIRONMENTAL DATA

CAIRO , EG — LATITUDE = 30.08
TILT ANGLE = 45.00 — AZIMUTH ANGLE = 0.00

	HORIZONTAL SOLAR RAD	TILTED SOLAR RAD	AMBIENT AIR TEMPERATURE	WATER SUPPLY TEMPERATURE
	BTU/SQFT-DAY	BTU/SQFT-DAY	DEG F	DEG F
JAN	1329.	2122.	57.	58.
FEB	1606.	2180.	59.	56.
MAR	1931.	2174.	64.	58.
APR	2215.	2050.	70.	65.
MAY	2400.	1931.	77.	73.
JUN	2444.	1839.	82.	81.
JUL	2400.	1862.	82.	87.
AUG	2252.	1964.	83.	89.
SEP	2016.	2099.	79.	86.
OCT	1617.	2037.	75.	80.
NOV	1333.	2006.	67.	71.
DEC	1218.	2020.	60.	64.

THERMAL PERFORMANCE — SPECIFIED COLLECTOR AREA = 4000.00 SQFT

	SOLAR FRACTION	INCIDENT SOLAR	COLLECTOR OUTPUT	SOLAR SYS OUTPUT	TANK LOSS	LOAD	TANK TEMP	TEM OUT
	%	*	*	*	*	*	DEG F	DEG
JAN	53.7	263.11	146.49	145.25	1.22	270.66	102	10
FEB	53.6	244.19	134.83	133.77	1.07	249.52	101	10
MAR	53.6	269.62	145.12	143.89	1.23	268.36	102	10
APR	53.9	245.95	130.46	129.13	1.31	239.65	105	10
MAY	53.7	239.41	120.10	118.59	1.49	221.00	109	10
JUN	55.6	220.72	106.00	104.36	1.64	187.78	114	11
JUL	60.2	230.94	107.33	105.54	1.90	175.29	115	11
AUG	67.4	243.58	116.09	113.94	2.11	169.04	123	12
SEP	70.5	251.86	123.34	121.26	2.08	171.86	124	12
OCT	64.9	252.60	130.12	128.22	1.91	197.65	119	11
NOV	58.8	240.65	129.82	128.28	1.56	218.33	112	11
DEC	54.4	250.51	138.09	136.75	1.35	251.59	105	10
YR	57.6	2953.15	1527.79	1508.92	18.87	2620.75		

* UNITS = MMBTU — ANNUAL OPERATING HOURS = 2887

FCHART-4R DESCRIPTION

F.1 FCHART-4R is a computer program that simulates the performance of several types of solar hot water and process heat systems. It is intended for use by engineers, architects, solar energy consultants, energy analysts, and others who need accurate information about the thermal and economic performance of the types of solar energy systems included. Features include optimization of collector area and a comprehensive economic analysis which was developed at the National Bureau of Standards.

F.2 Types of systems that can be simulated using FCHART-4R include liquid based active solar hot water and process heat systems. System types include systems that have either one or two storage tanks and may optionally have a collector heat exchanger.

F.3 The thermal performance report generated by FCHART-4R calculates the monthly average values for solar fraction, solar energy incident on the collectors, solar energy collected, tank losses, load, average tank temperature, and average temperature delivered from the solar storage tank. The program also calculates annual results.

F.4 The economic report generated by FCHART-4R calculates the discounted life cycle cost of the solar, auxiliary, and reference systems. Also included are the net savings, internal rate of return, discounted payback time, and annual simple and discounted cash flow for the solar energy system relative to the reference system. Economics will be addressed in a separate document; therefore, the FCHART-4R economics report will not be used.

Input Data Descriptions

General Poultry Company
Heliopolis, Egypt

General Information

1. System Type = 2.

1.1 Two-Tank System (FCHART-4R only)

1.2 This type of system includes a collector with an optional heat exchanger, a solar storage tank, and a separate auxiliary tank. In this system, water flows between the solar storage tank and the collector, where it is heated. Makeup water is supplied to the solar tank. When there is a hot water demand, the solar tank provides its output to the auxiliary tank where the hot water load is supplied from the auxiliary tank. If the temperature from the solar tank is lower than the thermostat setting on the auxiliary tank, auxiliary energy is added to bring it to the set temperature. In our case, the auxiliary tank is the scalder.

2. Economics (Yes=1, No=2, Economic Only =3)

Enter a one (1) to perform a thermal and economic analysis, a two (2) for thermal analysis only, or a three (3) for economic analysis only. If either collector area optimization (#3) or range of areas-fractions (#136) options are chosen, a one (#1) must be entered, as these options require economic data.

76

3. Collector Area Optimization (Yes=1, No=2)

Enter a one (#1) to perform collector area optimization or a two (#2) for the area specified in data item 11. The optimal collector area is the collector area which results in the greatest net savings over the analysis period. When optimization is selected, the economic data items must be specified.

4. City Number = 262.

CAIRO, EGYPT

LATITUDE = 30.08

	AMBIENT TEMP (DEG F)	DEGREE DAYS (DEG F-DAY)	HORIZONTAL SOLAR RAD. (BTU/SQFT-DAY)	GROUND WATER TEMP (DEG F)
JAN	57.0	148.0	1329.0	57.7
FEB	59.0	115.0	1606.0	56.0
MAR	63.5	97.0	1931.0	58.4
APR	70.0	63.0	2215.0	64.7
MAY	76.5	23.0	2400.0	72.8
JUN	81.5	1.0	2444.0	81.0
JUL	82.0	0.0	2400.0	86.7
AUG	82.5	0.0	2252.0	88.6
SEP	79.0	1.0	2016.0	86.0
OCT	74.5	22.0	1617.0	79.9
NOV	67.0	81.0	1333.0	71.4
DEC	59.5	138.0	1218.0	63.5

5-10. Not used in FCHART-4R.

C. Collector and Collector HX

11. Collector Area = 4,000

Enter the total collector area. If optimization is selected, this value is ignored. (1.0 square foot is the minimum value accepted by FCHART).

12. FR-UL Product = 0.72 Btu/hr. sf. F

Enter the slope of the straight line collector efficiency curve as determined by the ASHRAE 93-77 Collector Method. (Value is for flat U.S. solar collector).

13. FR-TAU-ALPHA Product = 0.76

Enter the y-intercept of the straight line collector efficiency curve as determined by the ASHRAE 93-77 Collector Test Method. (Value is for U.S. solar collector).

14. Incident Angle Modifier Constant = 0.17

Enter the value which is experimentally determined by the ASHRAE 93-77 Collector Test Method. (Value is for U. S. solar collectors.)

15. Collector Tilt Angle = 45 degees, Base Run

Enter the number of degrees (from horizontal) that the collector is tilted.

16. Collector Azimuth Angle (South Ø, East=-9Ø, West=+9Ø)

Enter the direction of the collector relative to South, which is defined as zero. Any azimuth between -18Ø and +18Ø is acceptable.

17. Collector HX Effectiveness = 1.

Enter a value of one (1) when there is no collector heat exchanger. When there is a collector heat exchanger, enter a value between zero and one. Typical values are 0.7 with correctly sized heat exchanger and 1 for no heat exchanger.

18. Collector Loop Flow Rate = 14.70 lb/hr sq ft

The flow rate per unit of collector area between the collector array and the collector heat exchanger or tank (depending on whether there is a collector heat exchanger or not).

Fluid flow per square foot (SF) of collector area. Define as 1.0 gpm/34 SF.

8.33 lb/gal of water

The collector loop flow rate becomes

	1/32	gpm/SF
*	8.33	lb/gal
*	60	minutes/hour
	14.70	lb/hr sf

19. Not used as FCHART-4R input.

20. Specific Heat of Collector Fluid = 1.0 Btu/lb°F

Enter the value for the specific heat of the collector fluid. The value for water is one (1) when using English units.

21. Specific Heat of Tank Fluid = 1.0 Btu/lb°F

Enter the value for the specific heat of the tank fluid. The value for water is one (1) when using English units.

22. UA of Collector Inlet Pipe = 0.5 Btu/hr°F

The overall heat loss coefficient U of the inlet pipe multiplied by the surface area A of the pipe.

23. UA of Collector Outlet Pipe = 0.5 BTU/HR°F

The overall heat loss coefficient U of the outlet pipe multiplied by the surface area A of the pipe.

24. Ground Reflectance = 0.2

Enter the reflectance of the horizontal surface in front of the collector. A value of 0.2 is typical except for conditions of snow or water surroundings, or other reflective surfaces.

25. Collector Test Flow Rate = 33.74 LB/HR.SF

The flow rate per unit of collector area through the collector during the ASHRAE 93-77 collector efficiency test. (Value is for U.S. solar collector)

26-30. Not used in FCHART-4R.

D. Solar Storage Tank

31. Solar Storage Capacity = 1.5 gal/SF

Enter the tank storage capacity per unit collector area. Typical values are 1.2 to 2.0 gal/sq ft (English units).

32. Solar Tank Height - Diameter Ratio = 2.

Enter ratio of the tank height to tank diameter.

33. Solar Tank U-Value = 0.10 BTUH/SF.F

Enter the overall heat loss coefficient of the Solar Storage Tank.

34. Solar Tank Environment Temperature = 70 degrees F

Enter the temperature to which tank losses occur. 70 degrees F is the mean annual ambient temperature for Cairo, Egypt.

35-40. Not used in FCHART-4R.

E. Auxiliary Storage Tank

41. Aux Tank Overall UA = 0.

Enter the overall heat loss coefficient U times surface area A of auxiliary tank. This is the tank heat loss per degree of temperature difference between tank fluid temperature and environment. Tank temperature is assumed to be equal to the

hot water set temperature. The scalder is the auxiliary tank for this application. Scalder heat loss has been accounted for in the energy balance.

42. Aux Tank Environment Temperature = 0.

Enter the temperature to which tank losses occur.

Process Load Information

51. Water Heater Usage = 12,718 gal/day

52. Water Heater Set Temperature = 140 degrees F

Enter the desired supply temperature of heated water. This temperature is used to calculate the total water heating load.

53. Water Main Temperature = -1000.

Enter the temperature of the cold water supplied to the water heating system (DHW). If a value of -1000 is used, temperature will be set equal to monthly ground water temperature (which is in the weather data file).

Appendix -G-

Services and Prices

G.1 Purpose

The Contractor shall furnish all design, equipment, shipment, installation, and training necessary to have a Flat Plate Solar Array System for Industrial Process Heat at Helwan Textiles, Helwan, Egypt that meets all performance requirements noted this S.O.W.

G.2 Price Schedule

A. Item	Quantity	Unit Price	Total Price
1. Solar Array (Collectors)	_____	_____	_____
2. Pumps	_____	_____	_____
3. Valves	_____	_____	_____
4. Thermal Storage Tanks	_____	_____	_____
5. All Controls	_____	_____	_____
6. Flash Steam Tank	_____	_____	_____
7. Condensate Return System	_____	_____	_____
8. Piping, Valves, and Piping Specialties	_____	_____	_____
9. Piping Insulation	_____	_____	_____

	Quantity	Unit Price	Total Price
10. Equipment Insulation	_____	_____	_____
11. Electrical	_____	_____	_____
12. Instrumentation	_____	_____	_____
13. Structural Steel	_____	_____	_____
14. Design	_____	_____	_____

B. Activities

Freight	_____
Insurance*	_____
Installation & Check Out	_____
Training	_____
DBA Insurance Required	_____
TOTAL CONTRACT PRICE	$_____
Operation & Maintenance Assistance**	_____

*To project site in Egypt with insurance remaining effective at least 6 months after arrival at the port of Alexandria.

**According to the Statement of Work, the Contractors are required to submit a complete program for Operation & Maintenance Assistance which will not be part of the evaluation but be negotiated as part of the entire agreement.