57190

7

BIOMASS ENERGY

TECHNOLOGY REFERENCE NOTEBOOK

Prepared for

EGYPTIAN ELECTRICITY AUTHORITY
Cairo, Egypt

and

U.S. AGENCY FOR INTERNATIONAL DEVELOPMENT
USAID Mission: Cairo, Egypt

Submitted to

LOUIS BERGER INTERNATIONAL, INC.
Washington, D.C.

Prepared by

MERIDIAN CORPORATION
Falls Church, VA
U.S.A.

SEPTEMBER 1985

RENEWABLE ENERGY RESOURCES FIELD TEST PROJECT

BIOMASS ENERGY TECHNOLOGY REFERENCE NOTEBOOK

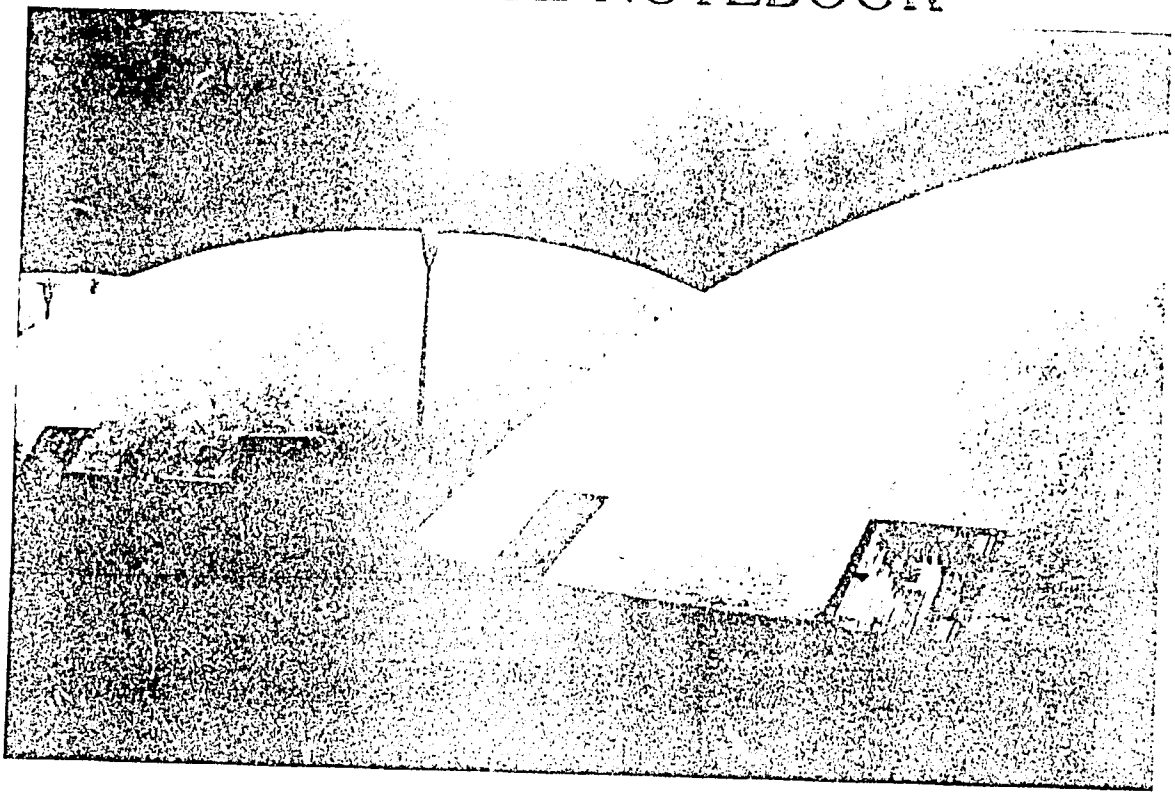

Prepared for:
EGYPTIAN ELECTRICITY AUTHORITY
Cairo, Egypt

and

U.S. AGENCY FOR INTERNATIONAL DEVELOPMENT
USAID Mission: Cairo, Egypt

Submitted to:
LOUIS BERGER INTERNATIONAL, INC.
Washington, D.C.

Prepared by:
MERIDIAN CORPORATION
Falls Church, Virginia, USA

SEPTEMBER 1985

Cover photograph: Sludge thickeners for anaerobic digesters at the Back River Sewage Treatment Plant in Baltimore, Maryland. See Appendix C for detailed description of this biogas production facility.

TABLE OF CONTENTS

	PAGE
1.0 INTRODUCTION	1-1
2.0 OVERVIEW OF BIOMASS ENERGY	2-1
2.1 A Broad Overview of Biomass Energy Options	2-1
2.1.1 Thermochemical Conversion	2-4
2.1.1.1 Direct Combustion	2-4
2.1.1.2 Gasification	2-4
2.1.1.3 Pyrolysis/Direct Liquefaction	2-5
2.1.2 Biochemical Conversion	2-5
2.1.2.1 Anaerobic Digestion	2-5
2.1.2.2 Fermentation	2-9
2.2 Viable Options for Egypt	2-10
2.2.1 Resource Availability	2-10
2.2.2 Market Readiness	2-12
2.2.3 Economic Viability	2-12
2.2.4 Industry Status	2-15
2.2.4.1 Methane from Sewage Sludge	2-15
2.2.4.2 Methane from Animal Manure	2-16
2.2.4.3 Energy from Municipal Waste	2-17
3.0 METHANE FROM SEWAGE SLUDGE	3-1
3.1 Sewage Treatment Process Overview	3-1
3.1.1 Sludge Treatment	3-3
3.1.1.1 Sludge Characterization	3-3
3.1.1.2 Thickening	3-6
3.1.1.3 Stabilization	3-8
3.1.2 Anaerobic Digestion	3-9
3.1.2.1 History and Current Status	3-9
3.1.2.2 Applicability	3-10
3.1.2.3 Advantages and Disadvantages	3-11
3.1.3 Microbiology	3-12
3.2 System Options	3-14
3.2.1 Low Rate Digestion	3-14
3.2.2 High Rate Digestion	3-15
3.2.2.1 Heating	3-16
3.2.2.2 Auxiliary Mixing	3-17
3.2.2.3 Pre-thickening	3-17
3.2.2.4 Uniform Feeding	3-18
3.2.2.5 Two-Stage Digestion	3-18
3.2.3 Anaerobic Contact Process	3-19
3.2.4 Phase Separation	3-20
3.3 System Design Considerations	3-22
3.3.1 System Components	3-22
3.3.1.1 Tanks	3-22
3.3.1.2 Heating	3-26
3.3.1.3 Mixing	3-28
3.3.1.4 Covers	3-31
3.3.1.5 Piping	3-35
3.3.1.6 Cleaning	3-35

3.3.2 Sizing of Anaerobic Digesters..... 3-40
3.3.2.1 Loading Criteria..... 3-40
3.3.2.2 Solids Retention Time..... 3-41
3.3.2.3 Recommended Sizing Procedure..... 3-45
3.3.3 Process Performance..... 3-45
3.3.3.1 Solids Reduction..... 3-46
3.3.3.2 Gas Production..... 3-47
3.3.3.3 Supernatant Quality..... 3-51
3.3.3.4 Digester Operation..... 3-51
3.3.4 Energy Production..... 3-53
3.3.4.1 Treatment of Digester Gas..... 3-56
3.3.4.2 Corrosion Factors..... 3-57
3.3.4.3 Boilers..... 3-57
3.3.4.4 Prime Movers..... 3-59
3.3.4.5 Generators..... 3-60
3.3.5 Other Design Considerations..... 3-61
3.4 Environmental Impacts..... 3-63
3.4.1 Pathogenic Organisms..... 3-63
3.4.2 Pathogenic Characteristics..... 3-64
3.4.2.1 Viruses..... 3-64
3.4.2.2 Bacteria..... 3-65
3.4.2.3 Parasites..... 3-66
3.4.2.4 Fungi..... 3-68
3.4.3 Pathogen Reduction During Digestion..... 3-69
3.4.3.1 Viruses..... 3-69
3.4.3.2 Bacteria..... 3-70
3.4.3.3 Parasites..... 3-70
3.4.4 Pathogen Survival in the Soil..... 3-71
3.4.4.1 Viruses..... 3-71
3.4.4.2 Bacteria..... 3-71
3.4.4.3 Parasites..... 3-72
3.4.5 Potential Human Exposure to Pathogens..... 3-72
3.4.6 Other Environmental Impacts..... 3-73
3.5 Special Considerations in the Egyptian Context..... 3-74
3.6 Current R&D Thrusts..... 3-76
3.6.1 Industry R&D..... 3-76
3.6.2 U.S. Government R&D..... 3-76
3.6.3 Other R&D..... 3-78

4.0 METHANE FROM MANURE..... 4-1
4.1 Process Description/Overview..... 4-1
4.2 Technology Description..... 4-2
4.3 System Design Considerations..... 4-8
4.3.1 Resource Inventory..... 4-8
4.3.2 Component Selection..... 4-8
4.3.3 Energy Applications..... 4-11
4.4 Environmental Impacts..... 4-12
4.5 Special Considerations in the Egyptian Context..... 4-16
4.6 Current R&D Thrust for Biogas Technology..... 4-16
4.6.1 Egyptian R&D..... 4-16
4.6.2 U.S. Government R&D..... 4-19
4.6.2.1 Agricultural Research Service..... 4-20
4.6.2.2 Biological Energy Research Division, DOE..... 4-20
4.6.2.3 Office of Industrial Programs, DOE..... 4-21
4.6.2.4 Biomass Energy Technology Division, DOE..... 4-22
4.6.3 Worldwide Experience Using Biogas Technology..... 4-23

5.0 ENERGY FROM MUNICIPAL SOLID WASTE 5-1
5.1 Overview of Process Options 5-1
5.1.1 Mass Incineration 5-1
5.1.2 Source Separation 5-2
5.1.3 Refuse Derived Fuel 5-2
5.1.4 Anaerobic Digestion of Municipal Solid Wastes 5-4
5.1.5 Landfill Gas 5-5
5.1.6 Pros and Cons of the Options 5-5
5.1.6.1 Resource Availability 5-5
5.1.6.2 Market Readiness 5-6
5.1.6.3 Economic Viability 5-7
5.1.6.4 Industry Status 5-7
5.2 Mass-Burn Technology Description 5-9
5.2.1 Site Built Systems 5-9
5.2.1.1 Refractory Systems 5-9
5.2.1.2 Waterwall Systems 5-9
5.2.2 Modular Systems 5-13
5.3 System Design Considerations 5-16
5.3.1 Energy Applications 5-16
5.3.2 Resource Inventory & Characterization 5-16
5.3.3 Site Selection 5-21
5.3.4 Input Waste Processing 5-22
5.3.5 Combustion System 5-25
5.3.6 System Sizing 5-28
5.3.7 Operational Considerations 5-29
5.4 Environmental Impacts 5-32
5.5 Special Considerations in the Egyptian Context 5-34
5.5.1 Public Infrastructure 5-34
5.5.2 Waste Availability 5-35
5.5.3 Industrial Development 5-35
5.5.4 Experience 5-36
5.6 Current R&D Thrusts 5-38
5.6.1 Industry R&D 5-38
5.6.2 U.S. Government R&D 5-38
5.6.2.1 Technology Transfer 5-39
5.6.2.2 Liquid and Gaseous Fuels Research 5-39
5.6.2.3 Biochemical Research 5-40
5.6.2.4 Base Research 5-41
5.6.3 Other R&D 5-43

6.0 ENERGY APPLICATIONS 6-1
6.1 Thermal Applications 6-1
6.1.1 Space Conditioning 6-2
6.1.2 Industrial Processes and Agricultural Applications 6-4
6.1.3 Desalination 6-6
6.2 Mechanical Applications 6-7
6.3 Electricity Generation 6-7
6.4 Cogeneration 6-8

7.0 ECONOMIC ANALYSIS 7-1
7.1 System Size 7-1
7.2 Estimation of Capital Costs 7-2
7.3 Estimation of Annual Costs 7-3
7.4 Estimation of Revenues 7-4
7.5 Life-Cycle Costing 7-4
7.6 Sensitivity Analysis 7-5

8.0 PRODUCTS..... 8-1
8.1 Anaerobic Digestion..... 8-2
8.2 Municipal Solid Waste..... 8-4
8.3 Manufacturers' Address..... 8-6

APPENDIX A: ANAEROBIC DIGESTION VISIT BOOK
APPENDIX B: MUNICIPAL SOLID WASTE VISIT BOOK
APPENDIX C: ANAEROBIC DIGESTION SIZING/SITE SELECTION GUIDE
APPENDIX D: SAMPLE CALCULATION OF GAS PRODUCTION FROM A SECONDARY SEWAGE TREATEMENT PLANT
APPENDIX E: MUNICIPAL SOLID WASTE SIZING/FEASIBLITY GUIDE

BIBLIOGRAPHY

LIST OF EXHIBITS

EXHIBIT		PAGE
2.1	Cycle of Biomass Energy Production	2-2
2.2	Municipal Solid Waste Incinerator for Direct Biomass Combustion	2-3
2.3	Characteristics of Anaerobic Digester Systems	2-7
2.4	Anaerobic Digester Designs	2-8
2.5	Annual Biomass Resources in Egypt	2-11
2.6	Estimated Biomass Energy and Contemporary Reference Costs	2-14
3.1	Sewage Treatment Process Schematic	3-2
3.2	Summary of the Anaerobic Digestion Process	3-12
3.3	Low-Rate Anaerobic Digestion System	3-15
3.4	Single-Stage, High-Rate Anaerobic Digestion System	3-16
3.5	Two-Stage, High-Rate Anaerobic Digestion System	3-18
3.6	Anaerobic Contact Process	3-19
3.7	Two-Phase Anaerobic Digestion Process	3-21
3.8	Cylindrical Anaerobic Digestion Tanks	3-23
3.9	Rectangular Anaerobic Digestion Tank	3-24
3.10	Egg-Shaped Anaerobic Digestion Tank	3-25
3.11	Circulation Patterns Produced by Draft Tube and Free Gas Lift Mixers	3-32
3.12	Types of Digestion Covers	3-34
3.13	Digestion Drain System	3-39
3.14	Typical Design Criteria for Sizing Mesophilic Anaerobic Digesters	3-41
3.15	Effect of SRT on the Relative Breakdown of Degradable Waste Components and Methane Production	3-43
3.16	Effect of Temperature and SRT on the Pattern of Methane Production and Volatile Solids Breakdown	3-44
3.17	Gas Production for Several Compounds in Sewage Sludge	3-49
3.18	Effect of Temperature on Gas Production	3-50
3.19	Composition of Biogas	3-52
3.20	Energy Flow Through an Anaerobic Sludge Digestion System	3-54
3.21	The Release, Conversion, Forms and Uses of Energy from Sludge	3-55
3.22	Schematic of Combined Boiler/Condenser System for Hot Water Production	3-58
3.23	Pathogenic Human Viruses Potentially in Wastewater Sludge	3-65
3.24	Pathogenic Human Bacteria Potentially in Wastewater Sludge	3-66
3.25	Pathogenic Human and Animal Parisites Potentially in Wastewater Sludge	3-67
3.26	Pathogenic Fungi Potentially in Wastewater Sludge	3-69
3.27	Pathogen Occurrence in Liquid Wastewater Sludge	3-70
3.28	Pathogen Survival in Soils	3-72
3.29	Potential Pathogen Pathways to Man	3-73

LIST OF EXHIBITS

EXHIBIT		PAGE
4.1	Traditional Complete-Mix Digester	4-3
4.2	Simple Complete-Mix Digester	4-3
4.3	Plug-Flow Digester	4-3
4.4	Comparison of Complete-Mix and Plug-Flow Digester	4-5
4.5	Suitability of Various Feedstocks for Anaerobic Digestion	4-6
4.6	Manure Production	4-7
4.7	Biogas Plumbing Schematic	4-9
4.8	Present Biogas Units in Egypt	4-18
5.1	Comparison of Energy Values of Municipal Solid Waste and Conventional Fuels	5-3
5.2	Cross Section of Typical Refractory Mass Incineration Facility	5-10
5.3	Cross Section of Typical Waterwall Mass Incineration Facility	5-11
5.4	Cross Section of a Rotary Combustor System	5-12
5.5	Cross Section of a Modular Combustion Unit	5-14
5.6	Net Quantity and Composition of Post-Consumer Residential and Commercial Solid Waste by Type of Material in the U.S., 1978	5-18
5.7a	Densities of Refuse and Associated Materials	5-19
5.7b	Densities of Pure Refuse Components	5-19
5.8	Typical Chemical Composition of Municipal Refuse Components (Ultimate Analysis)	5-20
5.9	Trommel for Waste Screening	5-23
5.10	Waste Shredder	5-24
5.11	Combustion System Schematic	5-26
5.12	Grate Designs	5-27
5.13	Summary of Worldwide Inventory of Waste to Energy Systems	5-37
6.1	Space Heating Systems	6-3
6.2	Applications Temperature Ranges for Some Industrial Process and Agricultural Applications	6-5
6.3	Topping and Bottoming Cogeneration Systems	6-10

1.0 INTRODUCTION

This document is one of a series of Technology Reference Notebooks developed for the Renewable Energy Field Test (REFT) Project sponsored by USAID and the Government of Egypt. The series includes individual notebooks on the following energy technologies:

- Active and Passive Solar
- Biomass
- Geothermal
- Photovoltaics
- Solar Thermal
- Wind

The objective of this series is to provide the most current information on renewable energy technologies in an easily updated and easily retrievable format.

The Biomass Energy Technology Reference Notebook is intended to give a detailed overview of all phases of biomass energy development, from initial resource assessments through project operation. Areas such as resource inventory development, environmental impact assessment, combustion system design, sewage treatment plant design, microbiology, pathology, application designs, and economic considerations are covered in sufficient detail to allow the reader to be "conversant" in these highly specialized fields. The notebook emphasizes biomass energy systems which are most appropriate in the Egyptian environment, namely municipal solid waste incineration and biogas production from sewage and from animal wastes. The appendices include a Biomass Projects Site Visit Book, providing information on specific projects that have been installed worldwide; and extensive product literature obtained from manufacturers, suppliers, and service companies in the United States.

2.0 OVERVIEW OF BIOMASS ENERGY

Biomass fuels represent a significant and diverse set of renewable energy resources, many of which are presently in widespread use. In this introductory chapter we will first present a broad overview of biomass energy options and then focus on specific options likely to be viable in Egypt.

2.1 A BROAD OVERVIEW OF BIOMASS ENERGY OPTIONS

Biomass fuels provide almost 15 percent of the energy used worldwide, mostly through the direct combustion of wood. Half the people in the world today are using biomass to meet 90 percent of their energy needs for cooking and heating. The Egyptian rural population depends upon bio-fuels to meet 50 percent of its energy needs. In the U.S., biomass supplies almost as much energy as nuclear reactors or hydroelectric plants.

Biomass is organic matter derived from plants and animals. There is no single biomass energy technology, but a number of biomass production techniques and conversion technologies that are interrelated in various combinations. Biomass resources include wastes and by-products from industrial and agricultural processes, plus biomass produced specifically for conversion to energy. The resource base includes: (1) municipal solid wastes and sewage, (2) residues and wastes from agricultural, forestry and livestock operations; (3) by-products from the food processing industry; (4) grains and sugar crops; and (5) woody, herbaceous and aquatic crops grown specifically for conversion to energy.

Biomass can be converted to solid, liquid and gaseous fuels through thermochemical, biochemical and extractive processes. The resulting energy products can be used by residential, commercial and industrial consumers for heat, power and fuel; by utilities for electricity production; and the chemical industry for petrochemical substitutes. Exhibit 2.1 illustrates the biomass energy production path.

EXHIBIT 2.1: CYCLE OF BIOMASS ENERGY PRODUCTION

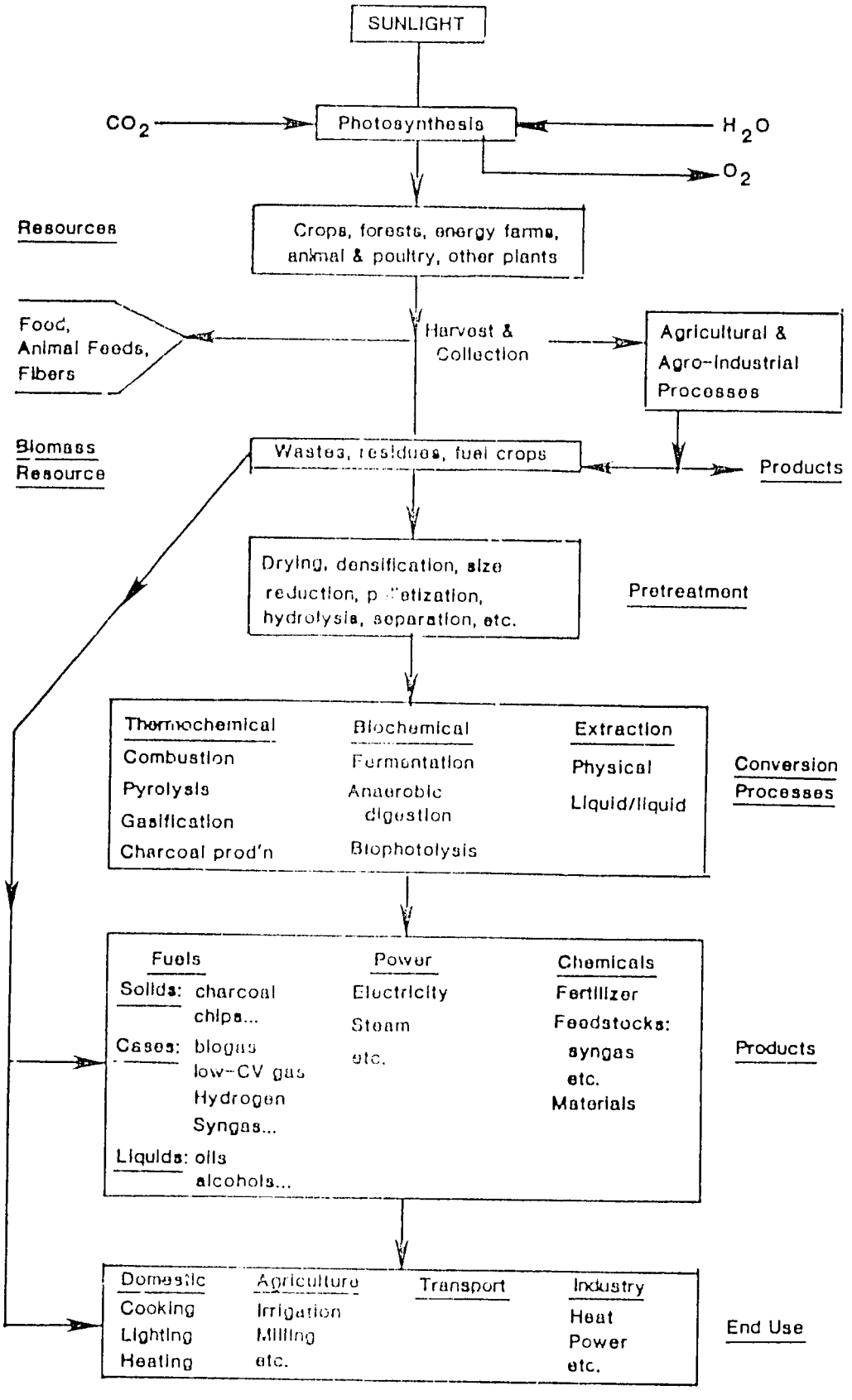

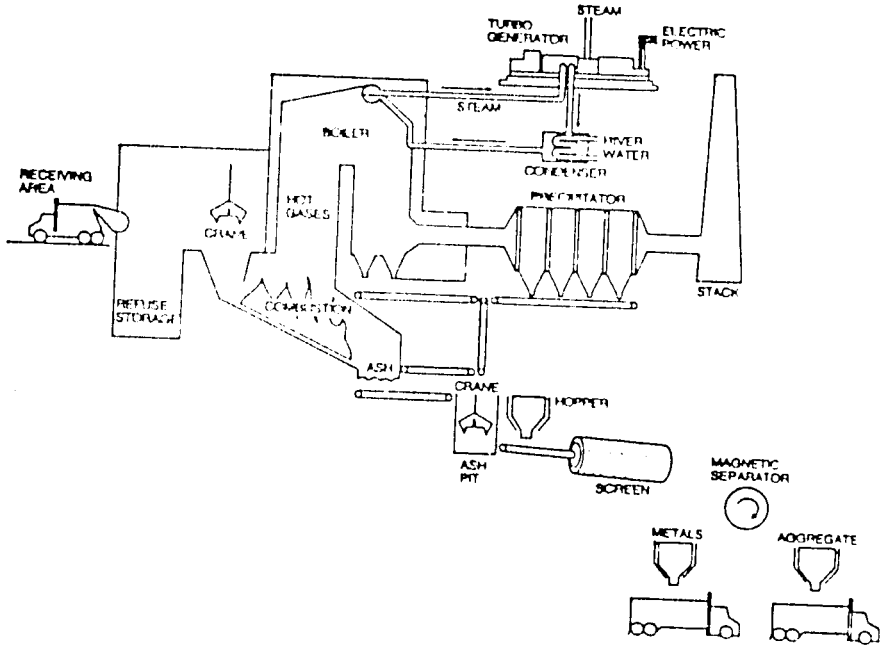

Exhibit 2.2

MUNICIPAL SOLID WASTE INCINERATOR
FOR DIRECT COMBUSTION

Source: Signal Environmental Systems, Inc.

2.1.1 Thermochemical Conversion

Thermochemical conversion processes use heat to convert biomass to fuels and energy. There are four thermochemical conversion processes. Direct combustion produces heat which, in turn, can produce steam for use in industrial processes or electricity generation. Gasification yields low-, medium- and high-heat content gas which can be used directly as fuel. Medium-heat content gas can also be refined into a natural gas substitute, methanol (wood alcohol) and ammonia. Direct liquefaction converts biomass into crude oil. And lastly, pyrolysis yields gases, oils and solid char.

2.1.1.1 Direct Combustion

Traditionally, biomass has been burned in open fire stoves in villages. This is thermally inefficient ($\leq$ 10%), although design improvements can double the efficiencies of cooking stoves.

Many larger scale direct combustion applications exist in which agricultural residues or municipal wastes are used as feedstocks for incinerator/steam turbine systems to produce steam or electricity. Both large and small scale direct combustion projects utilize mature technologies to produce thermal energy for a variety of applications (see Exhibit 2.2).

2.1.1.2 Gasification

Gasification of biomass is accomplished by heating the material in an oxygen-starved container and extracting combustible gas for use as fuel. A successful gasification operation requires properly constructed hardware, a feedstock whose characteristics are well-established and careful and constant process monitoring and control. The gas is typically a mixture of methane, hydrogen and carbon monoxide. It has 10% to 20% of the heating value of natural gas; thus it is best used at or near the site of production to supply process heat and steam to generate electric power.

2.1.1.3 Pyrolysis/Direct Liquefaction

Pyrolysis is the chemical decomposition of organic material, at high temperatures, in the absence of oxygen. Products from the pyrolysis of wood and agricultural residues are light oils, gases and charcoal. The slow heating of biomass, characteristics of conventional pyrolysis, typically yields these three products in equal amounts. Rapid heating, called "fast" or "flash" pyrolysis, substantially increases the quantities of the higher-valued light oils and gases. Direct liquefaction is a related process which, in a broad sense, includes any thermochemical conversion process that produces liquid products (crude oil) from biomass feedstocks without going through a separate, intermediate gas phase.

2.1.2 Biochemical Conversion

Biochemical conversion processes involve the controlled decomposition of biomass by microorganisms. There are two biochemical conversion processes that have been examined extensively for fuel production. Anaerobic (oxygen-free) digestion yields biogas, a mixture of methane and carbon dioxide. Fermentation by suitable microorganisms in an anaerobic environment results in the production of ethanol.

2.1.2.1 Anaerobic Digestion

Biochemical conversion processes utilize microorganisms which break down biomass feedstocks into simpler compounds, giving off energy in the process. Anaerobic digestion and fermentation are two microbial degradation processes used for the production of bio-fuels.

Anaerobic digestion provides an energy-efficient method for converting very wet biomass resources such as municipal sewage and animal manure. Exhibit 2.3 lists the characteristics of several anaerobic digester systems. Gaseous energy products readily separate from the liquid component and relatively

unsophisticated technologies are required for collecting the gas. In an anaerobic digester (essentially an enclosed gas-tight tank containing an aqueous slurry of biomass material), the absence of oxygen, and temperatures between 35°C and 60°C, favor bacteria which decompose the feed into biogas consisting of 50%-70% methane, with most of the remainder as carbon dioxide.

The biogas formation rate depends on the feedstock retention time, pH, temperature, and the nature of the substrate. Cellulosic materials, such as crop residues and municipal solid waste, produce biogas much more slowly than sewage sludge and animal manure. Various aquatic plants and wet food processing waste, such as those from cheese and fruit processing, are well suited for digestion.

Anaerobic digestion involves a number of different bacteria and the exact biochemical processes and relationships are not yet fully understood. The basic anaerobic digestion reactions are as follows: (1) decomposition (hydrolysis) of plant and animal matter into useable size molecules, such as sugar; (2) conversion of the decomposed matter to organic acids; and (3) conversion of the acids to methane. At least two different types of bacteria are involved. The methane-forming bacteria (methanogens) involved in step (3) above are especially sensitive to changes in temperature, pH, or the presence of toxins. The necessary bacteria may be present in the feedstock (as with cattle manure) or they may be introduced into the reactor upon start-up. Biogas production begins within a few days although complete stabilization may take months.

The energy conversion efficiency in digesters is typically about 50 percent, with the remaining energy used in bacterial cell growth and respiration and heat loss. An overall thermal/biochemical conversion efficiency of 30 percent is obtained if the biogas is then burned in appropriately designed burners.

Biogas production is a relatively straightforward technology and numerous possible digester designs are available. Selection of a specific design is

EXHIBIT 2.3 CHARACTERISTICS OF ANAEROBIC DIGESTER SYSTEMS

TYPE OF SYSTEM	APPLICATIONS AND INPUTS	SCALE[a]	STAGE OF DEVELOPMENT	ADVANTAGES	DISADVANTAGES
Landfill	Existing and planned landfills municipal solid wastes, sewage sludge, warm climates	2×10^6 tons of waste and up (10^5 m^2 landfill)	Commercial for "as is" landfills, controlled land filling in pilot stages	Low cost, tanks not required, high loading rates possible, no moving parts	Gas generation may last only 10 years in "as is" landfills, gas usage onsite may present problems
Single-tank plug flow	All types of organics, farm and feedlot operations	Small to large	Commercial	Low cost, simple design can run high solids wastes, can have gravity feed and discharge	Low solids wastes may stratify
Mutlitank batch system	Can accept all types of wastes, limited application crop residues, grasses, chicken broilers, turkeys	Small to large	Commercial in Asia	Simple, low maintenance, low cost, complete digestion of materials	Gas generation not continuous, labor, intensive feed and discharge, low gas production per day
Single-tank complete mix	All types of organics, sewage treatment, farm and feedlot, municipal solid wastes	Small to large	Commercial	Proven reliability, works well on all types of wastes	Greater input energy to run mixers, higher cost than plug flow
Anaerobic contact	Sewage sludge and other organics, limited application (see variable feed)	Medium to large	Commercial, for sewage treatment	Small tank sizes, operation not overly critical	Two tanks necessary
Two or three phase	Cellulosic feedstocks	Medium to large	Pilot scale	Allows more complete decomposition, greater gas yields, greater loading rates, low retention times	Feed rates vary with feedstocks, have not been attempted full scale, require tight controls and management of the operation
Packed bed	Dilute organics-sewage food-processing wastes, very dilute animal wastes - industrial and commercial	Medium to large	Commercial, as waste treatement technology	High loading rates possible, short retention times	Tends to clog with organic particles, limited to dilute wastes
Expanded bed	Dilute organics-sewage food-processing wastes, very dilute animal wastes	Undetermined	Laboratory	High loading rates low temperature digestion, high quality gas, short retention times	Not developed high energy input to operate pumps, no operating data
Mixed bed	Sewage sluge, animal wastes, food processing wastes - fairly dilute mixture	Small to large	Pilot scale	Fast throughputs, high loading rates, higher solids input than packed beds	Tends to clog, high pumping energy input, no operating data
Variable feed	All types of organics, farms and feedlots	Small to medium	Conceptual-combines plug flow with anaerobic contact	Allows seasonal peaking of gas production, preserves nutrient value of material, low cost	Feed-discharge may require extra pump

[a] Scale defined as small - 0 to 100 m^3 medium - 100 to 300 m^3 and large - over 300 m^3.

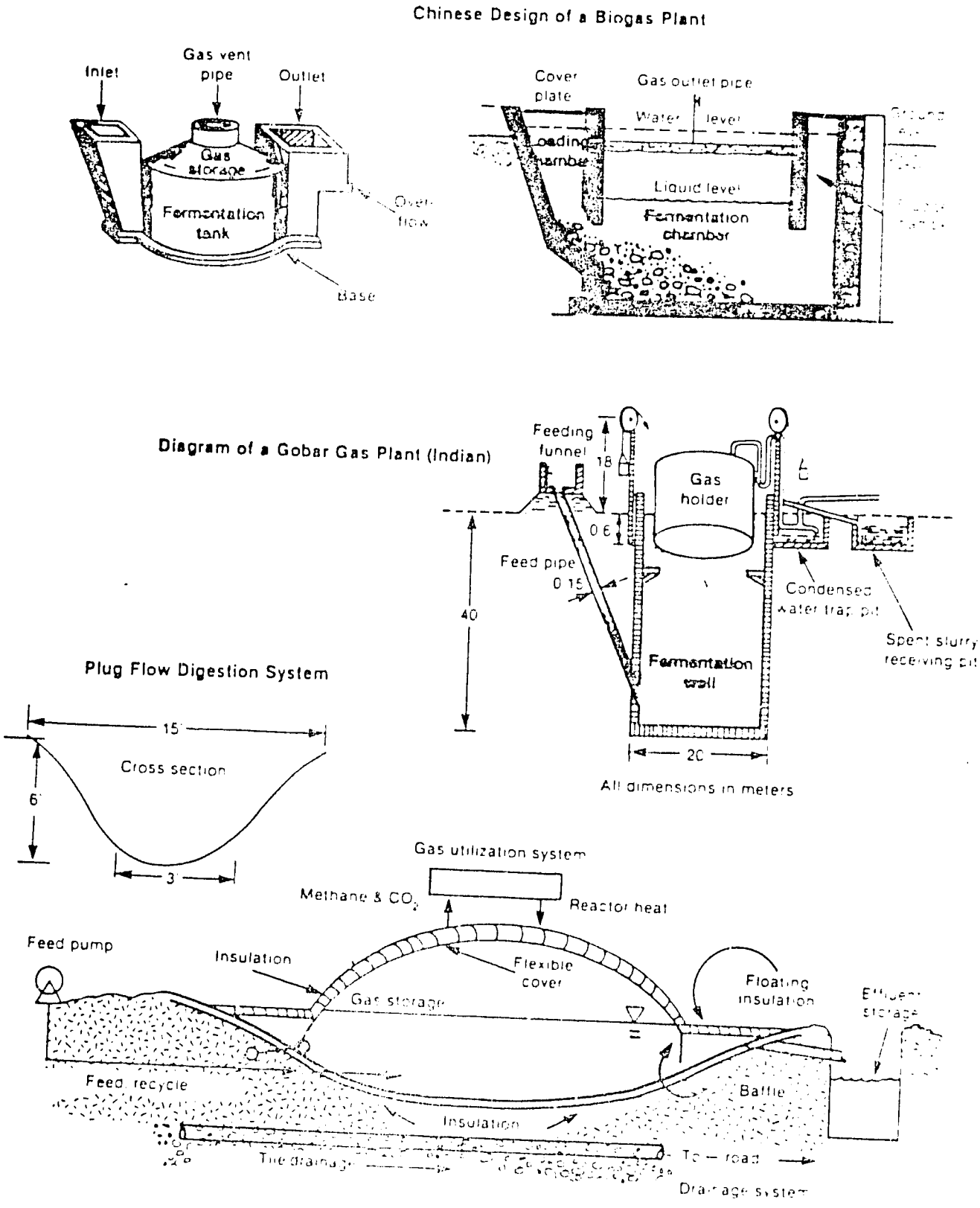

Exhibit 2.4
ANAEROBIC DIGESTER DESIGNS

dependent on the feedstock, availability of low-cost labor and the purpose of the digestion process. Exhibit 2.4 illustrates some some of these designs.

Major advantages of digestion, especially when compared to combustion of dung or wood fuels, are the ability to use wet feedstocks without drying, the greater energy conversion efficiencies realized, and the ability to use the resulting sludge by-product as a soil conditioner, fertilizer, and possibly as animal feed. Since the digestion process is one of waste stabilization, killing most pathogenic bacteria and parasites contained in manure and sewage, improved public health and hygiene from increased pollution control is a further benefit.

In urban areas, sewage is typically collected through existing networks and thus is readily available to be fed into anaerobic digesters. The biogas can either be burned in internal combustion engines to generate mechanical power or electricity, or the carbon dioxide can be removed and the methane used as fuel for automobiles or sold to local gas utilities. On-farm digesters utilize animal manure and agricultural residues to supply farm energy needs, such as heating and electricity. Family/village size units may also prove feasible in rural settings using a combination of human wastes, agricultural residues and manure. Village electricity needs can be met or the gas can be piped short distances to villagers' homes for use in cooking stoves. Raw biogas typically has a heating value of about 18,600 KJ/m^3 or half that of natural gas.

2.1.2.2 Fermentation

Biomass also can be fermented in an anaerobic (oxygen-free) environment by yeast or bacteria to produce ethyl alcohol. Ethyl alcohol, or ethanol, can be used for space heating; as the sole fuel in modified engines or combustion turbines; as a blended fuel in conventional gasoline engines; and as a solvent or reactant in the production of organic chemicals, plastics and fibers.

The production of ethanol involves: (1) treating the feedstock to produce a

19

concentrated and sterilized sugar solution, (2) converting the sugar to ethanol and carbon dioxide through fermentation, and (3) distilling to remove ethanol from the fermented solution. Ethanol can be produced from sugar crops (sugarcane, molasses, sweet sorghum, etc), starches (corn, potatoes, cassava, etc.), and from celluloses (wood, agricultural residues, etc.). The intensity of the required treatment process increases with starches and especially with cellulosic feedstocks. In general, processes for ethanol production from cellulosic feedstocks are more complex and larger in scale than those from starches and sugars.

2.2 VIABLE OPTIONS FOR EGYPT

The biomass options most likely to be viable for Egypt can be identified by assessing resource availability, market readiness, economic viability, and industry status.

2.2.1 Resource Availability

Because of their diverse and dispersed nature, bio-energy resources can be difficult to quantify. However, Exhibit 2.5 presents estimates of the annual resource base available to Egypt. As this exhibit indicates, the largest single biomass resource is agricultural residues -- approximately 20 M tons annually. Although there are considerably more tons of sewage sludge, the energy content of the agricultural residue is much greater, as shown in Exhibit 2.5. The principal residues are those from cotton, sorghum, maize, sugarcane, peanuts and sesame.

The two primary uses of the Egyptian resource base include direct burning and anaerobic digestion. Direct burning of agricultural residues and dung cakes (which is only about 10 percent efficient) completely destroys the organic matter and nutrients available in the feed. Conversely, anaerobic digestion produces a residue which can be used to meet increasing demand for fertilizer

and soil conditioners

EXHIBIT 2.5 ANNUAL BIOMASS RESOURCES IN EGYPT

Resources	Quantity on Dry Basis, Ton Potential	Quantity on Dry Basis, Ton Utilized as Energy*	Energy[1] Content 10^{15}J	Conversion Efficiency %	Net Energy Output[2] 10^{15}J
Agricultural Residues	$20x10^6$	$10x10^6$	200	8	16
Animal Excreta	$3x10^6$	$1.5x10^6$	17	8	1.4
Animal Power			96	10	10
Municipal Refuse	$2x10^6$	-	27		-
Sewage Sludge	$250x10^6$	-	29		-

* The rest is used as animal fodder and organic fertilizer.
1 = Supply; 2 = End Use

while also providing energy. This asset is extremely important in this region of decreasing agricultural productivity. The present deficit in farm yard manure wanted for fertilizer compared to that which is available is more than 80 million tons per year. The use of agricultural residues for anaerobic digestion is feasible then, if combined with an active soil conservation effort. The combined energy value of agricultural residues and animal wastes in Egypt is estimated at $217x10^{15}$ J annually.

Municipal wastes are a resource that is not only significant in size but significant as a highly visible public problem. The waste collection and disposal infrastructure in most of Egypt's urban areas is not keeping up with the increasing quantities of waste being generated. This resource can be considered highly available.

2.2.2 Market Readiness

Crop residues currently supply approximately one-third of the total energy consumed in Egypt. Animal wastes provide about 8 percent of the energy consumed in cooking applications. The potential energy market in Egypt consists of some 4,000 rural farm communities, encompassing about one-half of the population. Digesters can often be adapted to specific conditions and end uses and implemented using locally available materials and labor. Although much of the current energy market involves large scale operations, there is considerable interest in efficient, small scale systems and there have been technical breakthroughs in the development of low-cost digesters in countries as diverse as China, Tanzania and the U.S. A currently untapped market for large scale anaerobic digester systems that utilize municipal sewage also exists.

According to the Egyptian National Strategy, an attempt will be made to establish 400,000 digestion units by the year 2000, including 25,000 large-scale units. It is estimated that 6 percent of the total rural energy needs and a significant portion of fertilizer requirements can be met with this program.

Approximately 15 million liters of ethyl alcohol are produced annually in the sugar industry in Egypt by industrial fermentation of molasses. However, most of this is not utilized as fuel.

A market for energy generation from municipal wastes exists in Egypt, not only because there is a need for additional electricity generating capacity, but also there is a need - an imperative - to solve urban waste disposal problems.

2.2.3 Economic Viability

Since transporting animal and agriculture wastes long distances is very costly, the most economic use of digesters involves on-farm systems using local wastes in a beneficial manner.

On the average, 15 percent of the energy produced by an anaerobic digester is used to heat the waste entering the system and for the other operating requirements, e.g., pumping. The remainder of the gas is surplus energy. Removal of the carbon dioxide and sale of the methane gas to natural gas pipelines is not feasible in small operations because: (1) gas pipelines are often not readily accessible, (2) the cost of carbon dioxide removal equipment is high, and (3) revenues from gas sales would probably be relatively low. In very large systems, production of pipeline quality gas may be feasible.

In most on-farm systems, digester energy output is sufficient to meet the energy needs of livestock operation and, in about 50 percent of the cases, also meet the farmers' home energy needs and possibly allow for a small net export of electricity. The most economically attractive operations are relatively large poultry, dairy, beef or swine operations (enabling economy of scale) which are relatively energy intensive (enabling the displacement of large quantities of energy bought at retail prices with the production of biogas from large locally available quantites of manure).

Production of electricity from small, family-size digester units is rarely cost-effective. Larger systems in the 10 to 100 kW range may be able to produce electric power economically in the case of larger city/village-size systems. These larger systems can also save land which can then be used for productive purposes. The product gas can also be used to meet heating and cooking needs of the city or village.

Besides the potential for economic production of fuel and electricity, digestion produces an effluent which can be used as a soil conditioner, fertilizer or animal feed. In fact, the digested material has a higher value as fertilizer than the equivalent amount of farm yard manure. Also, nutrients which would be lost if the biomass were directly burned are recycled to the land. Furthermore, there are social benefits which should be considered in determining economic viability.

EXHIBIT 2.6

ESTIMATED BIOMASS ENERGY AND
CONTEMPORARY REFERENCE COSTS

Country	Product	Cost ($/GJ)
Brazil (1977)	Ethanol	16.1
	Gasoline	12.3
Australia (1975)	Ethanol	16.7
	Ethanol (industrial)	18.4
Canada	Methanol (Wood)	4.2 - 9.7
New Zealand	Biogas	3.5 - 5.6
	Natural Gas (prod)	1.1
	Coal Gas (prod)	6.3
Upper Volta	Fuelwood (plantation)	25
	Kerosene	36
	Butane	31
Tanzania	Biogas	3.3
	Electricity	31.4
USA	Methanol	8.0 - 15.1
	Ethanol	14.2 - 34.1
	Medium Btu Gas	4.5 - 7
	S.N.G.	4.5 - 6.9
	Ammonia	5.5 - 10.8
	Fuel Oil	3.4 - 7.5
	Electricity	8.3 - 38.9

Approximate Reference Costs:

S.N.G.	2.8 - 4.7
Fuel Oil	2.8
Ethanol	19
Medium Btu Gas	2.8 - 4.7
Electricity	8.3 - 16.6

These inlcude improved health and hygiene which can result from the anaerobic digestion of manure and sewage.

Considered solely as a thermal or electrical energy source, a municipal solid waste incinerator will only have borderline economic feasibility, costing more to build per KW of power capacity than traditional fossil-fuel or nuclear power plants. However, when one also considers an energy recovery plant's value in reducing the quantity and noxiousness of municipal waste requiring disposal, the economics of the project usually become extremely attractive. Exhibit 2.6 presents cost comparisons between selected bio-fuels and conventional fuels in various countries.

2.2.4 Industry Status

The industry varies greatly, worldwide, as patterns of use vary widely. Some countries have technical expertise in virtually every aspect of biomass production and conversion to energy. Useage in developing countries consists largely of gathering wood by hand for cooking and heating applications. It is estimated that about 1 billion people still do not have adequate supplies of fuelwood, which prevents many small businesses and industries in developing countries from utilizing more efficient biomass energy technologies.

2.2.4.1 Methane from Sewage Sludge

Anaerobic digestion has been used as a means of sterilizing and stabilizing sewage sludge for almost a century. Many large scale digestors have been in nearly countinuous operation for periods of fifty years and more, and the design of sophisticated continuous-feed digestor systems is now a part of standard environmental engineering practice.

Until recently the methane gas generated by anaerobic digestion was often simply burned off in the open air. Since the fuel price increases of 1973 it has become more common to utilize this gas for space and process heating at

the sewage treatment plant, and, in some cases, to scrub and compress the gas for sale to distributors of natural gas. This biogas technology is well-established as a means of stabilizing sewage sludge and can be expected to be used whenever anaerobic digestion is clearly indicated over alternative stabilization processes including aerobic digestion, heat treatment or chemical treatment.

As Egypt builds its civil infrastructure, including sewage collection systems and sewage treatment plants, it can incorporate sewage biogas utilization as a standard feature of this component of its physical development. This will require only a marginal additional investment in these facilities.

2.2.4.2 Methane from Animal Manure

On farm anaerobic digesters are rapidly moving out of the laboratory and into the marketplace. The anaerobic digestion process is well known and it is often used in waste water treatment plants to stabilize sludge. Private sector prospects are also improving because of new reactor designs. It is predicted that, in the next few years, commercially competitive digesters will be available for use on farms and feedlots, in food processing plants, in pulp and paper mills, and in chemical manufacturing plants. At present, most systems digest manures. However, custom-designed digestion systems ranging from small to large scale are also commercially available for handling agricultural wastes, sewage and food processing wastes; some of these systems are combined with organic composting systems. China has demonstrated the use of village-size units with millions of units reportedly in place.

Remaining problems in the commercial development of anaerobic digesters are the lack of long-term, detailed and reliable economic and operating data for use in critical analyses and digester design, along with the low conversion efficiencies often associated with the process. There are, however, existing plants that are far more efficient in terms of biogas production rates than those

often found in the developing countries.

2.2.4.3 Energy from Municipal Waste

Municipal solid waste (MSW) can be used to generate useful enegy in a variety of ways. Certain processes, such as combustion to produce steam or electricity, have a long record of successful use in both the United States and Europe. Anaerobic digestion of MSW is still in the research and development phase. Tapping of landfill gas and refuse-derived fuel production are innovations that only recently have achieved widespread commercial acceptance. The use of MSW in direct combustion "mass-burn" systems is likely to be appropriate in Egypt just as it is elsewhere in the world.

In its larger, older cities, Egypt's traditional garbage collectors and scavengers can no longer dispose of waste as quickly as it is generated. Unscavenged waste piles up in the streets and new means of garbage collection and disposal are being sought. In new, planned cities, there is an expressed desire to build this infrastructure with the city so that it keeps pace with the city's garbage disposal needs. The use of MSW for fuel may provide part of the solution to Egypt's urban garbage disposal problems in addition to providing a reliable source of energy for these cities.

3.0 METHANE FROM SEWAGE SLUDGE

Sewage treatment plants generate substantial amounts of organic sludge during both primary and secondary treatment of liquid wastes. Anaerobic digestion has been used as a means of sterilizing and stabilizing this sewage sludge for almost a century. Many large scale digesters have been in nearly countinuous operation for periods of fifty years and more, and the design of sophisticated, continuous-feed digester systems is now a part of standard environmental engineering practice.

Until recently, the methane gas generated by anaerobic digestion was often simply burned into the atmosphere with no heat recovery. Since the fuel price increases of 1973 it has become more common to utilize this gas for space and process heating at the sewage treatment plant, and, in some cases, to scrub and compress the gas for sale to local distributors of natural gas.

As Egypt builds its civil infrastructure, including sewage collection systems and sewage treatment plants, it can incorporate sewage biogas utilization as a standard feature of this component of its physical development. This will require only a marginal additional investment in these facilities.

This chapter begins with a brief description of the sewage treatment process and anaerobic digestion. It then covers system options, system design considerations, economic analysis, environmental impacts, special considerations in the Egyptian environment and current R&D thrusts.

3.1 SEWAGE TREATMENT PROCESS OVERVIEW

There are currently a great variety of approaches to the treatment of sewage. The specific combination of processes specified for a given treatment plant depend on a number of parameters: the composition and characteristics of the raw sewage, the means of disposing of the liquid effluent and the solid sludge, climatic considerations and budgeting constraints.

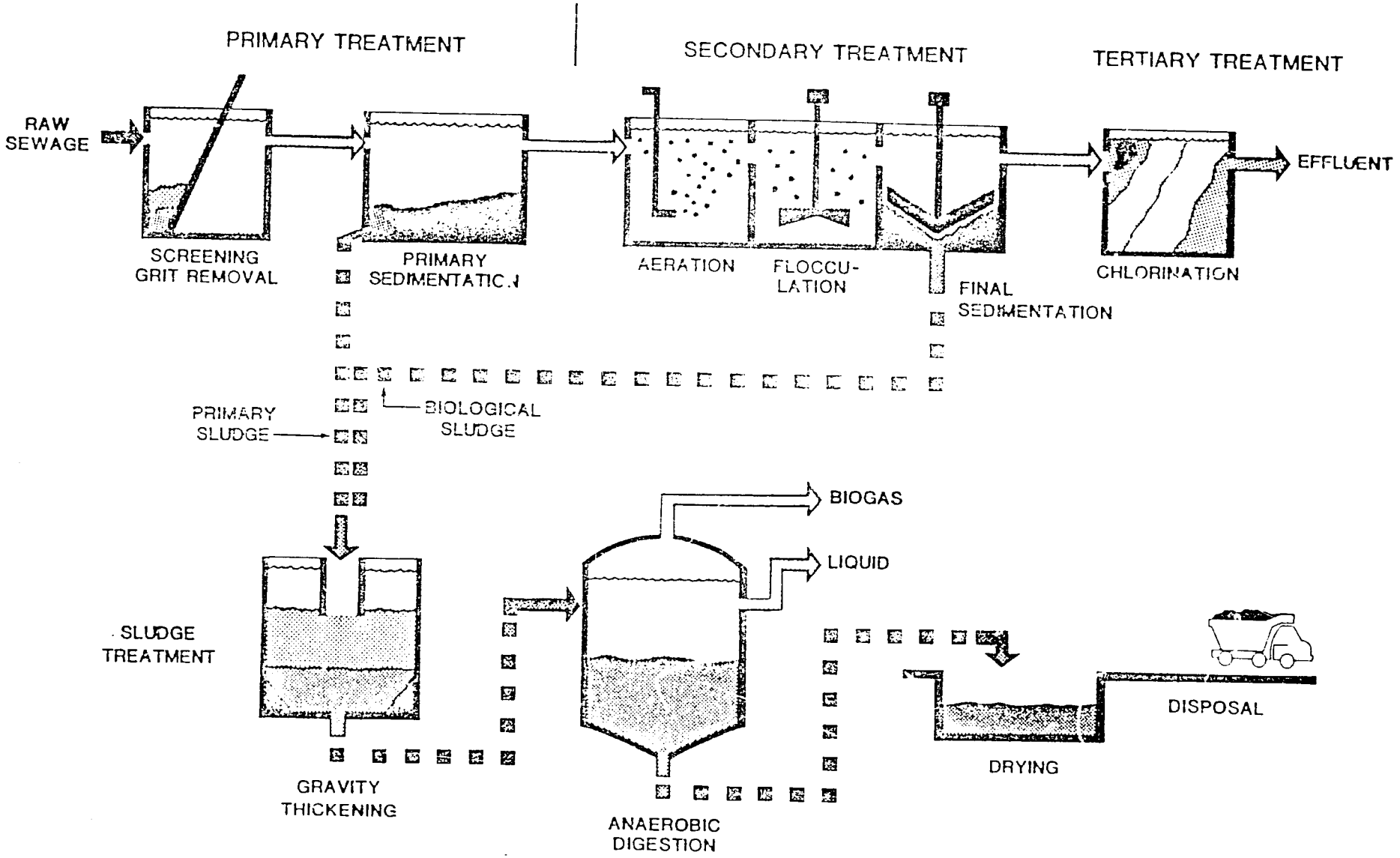

Exhibit 3.1
SEWAGE TREATMENT PROCESS SCHEMATIC

Most wastewater treatment plants undertake, at a minimum, initial screening and grit removal, followed by primary sedimentation or settling (See Exhibit 3.1). This primary stage removes the larger suspended and settleable solids from the waste stream and produces a primary effluent and a primary sludge. The primary effluent often undergoes secondary treatment. This may involve a process as simple as disposal via direct application to land for either surface or subsurface percolation. However, quite often it will take the form of biological treatment, in which bacteria (and other microbes) metabolize the organic components of the effluent and then settle out of the waste stream to form an activated sludge, leaving a cleaner secondary effluent. The secondary biological treatment process usually involves 3 steps: aeration (bubbling air through the effluent) to encourage bacterial growth, flocculation (making solids gather together) to cause waste particles to aggregate, and sedimentation (settling of wastes). The secondary effluent can undergo tertiary treatment, which is often a chemical disinfection process such as chlorination.

3.1.1 Sludge Treatment

Whether the raw sewage undergoes primary, secondary or tertiary treatment, sludges are produced and must be disposed of.

3.1.1.1 Sludge Characterization

Primary Sludge - Most wastewater treatment plants use primary sedimentation to remove readily settleable solids from raw wastewater. In a typical plant with primary sedimentation and a conventional activated sludge process for secondary treatment, the dry weight of primary sludge solids is roughly 50 percent of that for the total sludge solids. For several reasons, primary sludge is usually easier to manage than biological and chemical sludges. First, primary sludge is readily thickened by gravity, either within a primary sedi-

mentation tank or within a separate gravity thickener. In comparison with biological and many chemical sludges, primary sludge with low conditioning requirements can be mechanically dewatered rapidly. Further, the dewatering device will produce a drier cake and give better solids capture than it would for most biological and chemical sludges. Primary sludge production is typically within the range of 100 to 300 mg/l of wastewater.

Biological Sludges - Biological sludges are produced by secondary treatment processes such as activated sludge, trickling filters, and rotating biological contactors. Quantities and characteristics of biological sludges vary with the metabolic and growth rates of the various microorganisms present in the sludge. The quantity and quality of sludge produced by the biological process is intermediate between that produced in no-primary systems and that produced in full-primary systems in cases when fine screens or primary sedimentation tanks with high overflow rates are used. Biological sludge containing debris such as grit, plastics, paper, and fibers will be produced at plants lacking primary treatment. Plants with primary sedimentation normally produce a fairly pure biological sludge. The concentrations and, therefore, the volumes of waste biological sludge are greatly affected by the method of operation of the clarifiers. Biological sludges are generally more difficult to thicken and dewater than primary sludge and most chemical sludges.

Chemical Sludges - Chemicals are widely used in wastewater treatment to precipitate and remove phosphorus, and in some cases, to improve suspended solids removal. At all such facilities, chemical sludges are formed. A few plants apply chemicals to secondary effluent and use tertiary clarifiers to remove the chemical precipitates. However, it is more common to add the chemicals to the raw wastewater or to a biological process. Thus, chemical precipitates are usually mixed with either primary sludge solids or biological sludge solids.

Elemental Analysis of Various Sludges - As a rule, almost any element can be found in sludge. This paragraph describes trace elements in all types of sludge. It is a basic principle of chemistry that elements are not created or destroyed but chemically recombined. Therefore, the mass of each element entering a treatment plant fixes the mass that either accumulates within the plant or leaves it. The mass leaving the plant does so in gaseous emissions, effluent, a special concentrated stream, or sludge. Extracting toxic elements from sludge appears to be impractical; source control is the most practical way to reduce these toxicants.

Trace elements are present in industrial process waste, industrial waste spills, domestic water supply, feces and urine, and detergents. Additional trace elements are derived from:

- Chemicals in photographic solutions, paints, hobby plating supplies, dyes, and pesticides used in households and commercial enterprises.
- Storm inflow (this is particularly true for lead from gasoline anti-knock compounds).
- Corrosion of water piping, which contributes zinc, cadmium, copper, and lead.
- Chemicals used in wastewater treatment, sludge conditioning, etc.

Occasionally, elements can be converted from a highly toxic form to a less toxic form in wastewater treatment. Chromium is a good example of this. In its initial form, it is highly toxic, but may be converted to a less toxic form in secondary treatment.

The elemental compositions of various sludges differ from one another. If sludges are to be reused, they should be analyzed for a number of elements. The importance of site-specific analysis of sludges varies with the size of the project, regulatory requirements, industrial activity, and the type of reuse desired.

Several of the trace organic compounds found in sludge, for example, polychlorinated biphenyls (PCBs), are toxic, slow to decompose, and widely distributed in the environment. Because of their fat-soluble nature, PCBs tend to concentrate in skimmings and scum at wastewater treatment plants. The conventional procedure of introducing skimmings into the digester can cause higher concentrations of PCBs in the final sludge. Alternative disposal procedures for skimmings, such as incineration, can reduce this problem.

Miscellaneous Wastewater Solids - In addition to the primary, biological, and chemical sludges discussed in previous sections, there are several other wastewater solids that must be properly handled to achieve good effluent, general environmental protection, and reasonable treatment plant operations. These solids include screenings, grit, scum, septage, and filter backwash.

When mixed with primary or secondary sludges, screenings, scum, grit, and septage can interfere with the processing and reuse of the sludge. Before mixing these wastewater solids with primary and secondary sludges, design engineers should consider the following:

- Screenings and scum detract from the final appearance, and marketability, of sludges. They can also clog piping, pumps, and mixers, and occupy valuable space in digesters and other tankage.
- Scum presents a special problem when mixed with other solids and subjected to gravity thickening, decanting, or de-watering by centrifuge. Under these conditions, scum tends to concentrate in the sidestream and to be recycled to the wastewater processes. Eventually some of this recycled scum is discharged to the effluent.
- Grit can block pipelines, occupy valuable space in digesters and other tankage, and cause excessive wear to solids piping and processing equipment.

3.1.1.2 Thickening

Thickening is only one part of the wastewater solids treatment and disposal system and must be integrated into the overall treatment process, so that performance for both liquid and solids treatment is optimized and total cost

is minimized. Thickening is defined as removal of water from sludge to achieve a volume reduction. The resulting material is still fluid.

Sludges are thickened primarily to decrease the capital and operating costs of subsequent sludge processing steps by substantially reducing the volume. Thickening from one percent solids concentration to five percent reduces the volume to one-fifth its original volume.

Depending on the process selected, thickening may also provide the following benefits: sludge blending, sludge flow equalization, sludge storage, grit removal, gas stripping, and clarification.

The main design variables of any thickening process are:

- o Solids concentration and volumetric flow rate of the feed stream;
- o Chemical demand and cost if chemicals are employed;
- o Suspended and dissolved solids concentrations and volumetric flow rate of the clarified stream;
- o Solids concentration and volumetric flow rate of the thickened sludge.

Specific design criteria for selection of a thickening process can also be dependent on the chosen downstream process train. Another important consideration is the operation and maintenance (O/M) cost and the variables affecting it. Finally, thickening reliability is important for successful plant operation. A reliable thickening system is needed to maintain the desired concentration and relatively uninterrupted removal of sludge from a continuously operated treatment plant. Sludges are being generated constantly, and if they are allowed to accumulate for a long time, the performance of the entire plant will be degraded.

Thickening is accomplished in sedimentation basins; gravity, flotation and centrifugal thickeners; and in miscellaneous facilities such as secondary anaerobic digesters, elutriation basins, and sludge lagoons.

3.1.1.3 Stabilization

The principal purposes of stabilization are to make the treated sludge less odorous and putrescible (tendency to decay) and to reduce the pathogenic organism content. Some procedures used to accomplish these objectives can also result in other basic changes in the sludge. The selection of a certain method hinges primarily on the final disposal procedure planned. If the sludge is to be dewatered and incinerated, frequently no stabilization procedure is employed. Most stabilization methods, particularly anaerobic and aerobic digestion, result in a substantial decrease in the amount of suspended sludge solids.

Four processes that have the primary function of sludge stabilization will be discussed. These processes are anaerobic digestion, aerobic digestion, lime stabilization, and chlorine oxidation. Both anaerobic and aerobic digestion are currently increasing in popularity. The former is receiving revived attention for several reasons. The production of methane in anaerobic digestion is attractive in view of energy shortages, and anaerobically digested sludges are highly suitable for disposal on land. Interest in aerobic digestion of excess activated sludge is growing because it has the potential for providing a good quality liquid process stream and can produce exothermic reaction conditons. A major impetus for processes such as anaerobic and aerobic digestion and lime treatment is the growing emphasis on utilization of sludge rather than mere disposal. Chlorine oxidation is of limited use for special situations or where septic tank wastes are involved.

Several other sludge treatment processes provide varying degrees of stabilization, although this is not their principal function. Composting is practiced in several United States cities and is being actively investigated for others. Heat treatment has been installed in several new United States plants to improve the economics of sludge conditioning and dewatering. Some

processes used to disinfect sludge, such as heat drying and pasteurization, also provide limited stabilization.

Selection of the optimum stabilization method for any treatment and disposal system requires an in-depth understanding of the method and its limitations. The designer must recognize these limitations and accommodate them in the design of the subsequent processing and disposal steps.

Following stabilization, sludges may undergo several types of final treatment steps. Disinfection, which is the destruction or inactivation of pathogenic organisms in the sludge, can be carried out to minimize public health dangers. The sludge can also be conditioned biologically, chemically and/or physically to enhance water removal. Dewatering can be done to dramatically reduce the volume of sludge to be disposed of. Drying makes the sludge easy to handle. The sludge often must be transported and stored prior to ultimate disposal. Disposal itself can be beneficial, as when sludge is utilized for soil improvement, landfill toppings, or as a source heat and work.

3.1.2 Anaerobic Digestion of Sewage Sludge

Anaerobic digestion is the biological degradation of complex organic substances in the absence of free oxygen. During these reactions, energy is released and much of the organic matter is converted to methane, carbon dioxide, and water. Since little carbon or energy remain available to sustain further biological activity, the remaining solids are rendered stable.

3.1.2.1 History and Current Status

Anaerobic digestion is among the oldest forms of biological wastewater treatment. It was first used a century ago to reduce both the quantity and odor of sewage sludges. Originally, anaerobic digestion was carried out in the same tank as sedimentation, but the two-story tanks developed in England by Travis and in Germany by Imhoff began a trend toward separating the two processes.

Separate sludge digestion tanks came into use in the first decades of this centry. At first, these were little more than simple holding tanks, but they provided the opportunity to control environmental conditions during anaerobic digestion and thereby improve process performance. With the development of digester heating and, subsequently, mixing, anaerobic digestion became the most common method of stabilizing sludge.

As both industrial waste loads and the general degree of wastewater treatment increased, the sludges generated by treatment plants became more varied and complex. Digester systems failed because their design and operation were empirically developed under simpler conditions. As a result, anaerobic sludge digestion fell into disfavor. However, interest in anaerobic digestion of dilute wastes stimulated a new wave of research into the process. This has led to significant improvements in both reliability and performance of anaerobic digesters.

Currently, sludge stabilization by anaerobic digestion is used extensively. A 1977 survey of 98 municipal wastewater treatment plants in the United States found that 73 used anaerobic digestion to stabilize and reduce the volume of sludge. Because of emphasis on energy conservation and recovery, and environmental pressure to use wastewater sludges on land, it is expected that anaerobic digestion will continue to play a major role in municipal sludge processing.

3.1.2.2 Applicability

A wide variety of sludges from municipal wastewater treatment plants can be stabilized through anaerobic digestion. Solids-liquid separation of digested primary sludge is downgraded by even small additions of biological sludge, particularly activated sludge. Although mixtures of primary and biological sludge will break down readily under anaerobic conditions, the net rate of the reaction is slowed slightly. Experience with full-scale anaerobic digestion of

straight activated sludge is limited, although laboratory and pilot-scale studies demonstrate that separate digestion of activated sludge is feasible.

Chemical sludges have been successfully digested anaerobically, although in several cases, volatile solids reduction and gas production were low, compared to conventional sewage sludges. Decreased performance appears to result from reduced biodegradability rather than from toxic inhibition of the anerobic microorganisms.

Anaerobic digestion is a feasible stabilizing method for wastewater sludges that have low concentrations of toxins and a volatile solids content above 50 percent. The anaerobic microorganisms involved in the process are sensitive and do not thrive under fluctuating operating conditions. Consequently, the process must be carefully considered for use at treatment plants where wide variations in sludge quantity and quality are common.

3.1.2.3 Advantages and Disadvantages

Anaerobic digestion offers several advantages over other methods of sludge stabilization; specifically, the process:

- <u>produces methane,</u> a usable source of energy. In most cases, the process is a net energy producer, since the energy content of digester gas exceeds the energy demand for mixing and heating. Surplus methane is frequently used for heating buildings, running engines, or generating electricity.

- <u>reduces total sludge mass</u> through the conversion of organic matter to primarily methane, carbon dioxide, and water. Commonly, 25 to 45 percent of the raw sludge solids are destroyed during anaerobic digestion. This can substantially reduce the cost of sludge disposal.

- <u>yields a solids residue suitable for use as a soil conditioner.</u> Anaerobically digested sludge contains nutrients and organic matter than can improve the fertility and texture of soils. Odor levels are greatly reduced by anaerobic digestion.

- <u>inactivates pathogens.</u> Disease-producing organisms in sludge die off during the relatively long detention times used in anaerobic digestion. The high temperatures used in thermophilic digestion (50 to 60°C) have an additional bactericidal effect.

38

Principal disadvantages of anaerobic sludge digestion are that it:

- o has a high capital cost. Very large, closed digestion tanks are required, which must be fitted with systems for feeding, heating, and mixing the sludge.

- o is susceptible to upsets. Microorganisms involved in anaerobic decomposition are sensitive to small changes in their environment. Monitoring of performance and close process control are required to prevent upsets.

- o produces a poor quality sidestream. Supernatants (liquid run-off) from anaerobic digesters often have a high oxygen demand and high concentrations of nitrogen and suspended solids. Recycling of digester supernatant to the plant influent may upset the liquid process stream or produce a build-up of fine particles in the treatment plant. In plants that are required to remove nitrogen from the wastewater, the soluble nitrogen in the supernatant can cause problems and/or increased costs of treatment.

- o keeps methane-producing bacteria growth at a slow rate. Large reactors are required to hold the sludge for 15 to 30 days to stabilize the organic solids effectively. This slow growth rate also limits the speed with which the process can adjust to changes in waste loads, temperature, and other environmental conditions.

3.1.3 Microbiology

Anaerobic digstion involves several successive fermentations carried out by a mixed culture of microorganisms. This web of interactions comprises two general degradation phases: acid formation and methane production. Exhibit 3.2 shows, in simplified form, the reactions involved in anaerobic digestion.

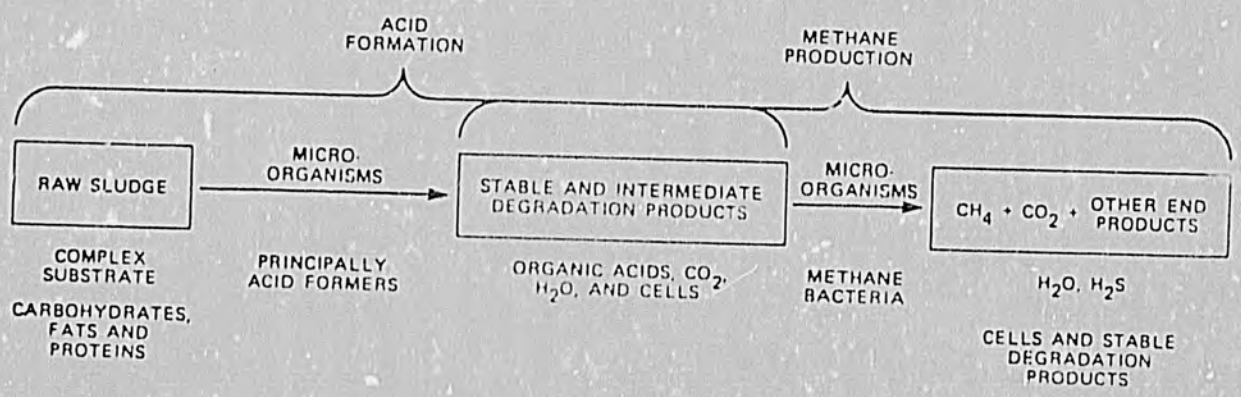

Exhibit 3.2
SUMMARY OF THE ANAEROBIC DIGESTION PROCESS

Source: EPA, 1979

31

In the first phase of digestion, facultative bacteria convert complex organic substrates to short-chain organic acids--primarily acetic, propionic, and lactic acids. These volatile organic acids tend to reduce the pH, although alkaline buffering materials are also present. Organic matter is converted into a form suitable for breakdown by the second group of bacteria.

In the second phase, strictly anaerobic bacteria (called methanogens), convert the volatile acids to methane (CH_4), carbon dioxide (CO_2), and other trace gases. There are several groups of methanogenic bacteria, each with specific substrate requirements, that work in concert to reduce complex wastes such as sewage sludge.

When an anaerobic digester is working properly, the two phases of degradation are in dynamic equilibrium; that is, the volatile organic acids are converted to methanes at the same rate that they are formed from the more complex organic molecules. As a result, volatile acid levels are low in a working digester. However, methane formers are inherently slow-growing, with doubling times measured in days. In addition, methanogenic bacteria can be adversely affected by even small fluctuations in pH, substrate concentrations, and temperature. In contrast, the acid formers can function over a wide range of environmental conditions, and have doubling times normally measured in hours. As a result, when an anerobic digester is stressed by shock loads, temperature fluctuations, or an inhibitory (toxic) material, methane bacteria activity begins to lag behind that of the acid formers. When this happens, organic acids cannot be converted to methane as rapidly as they form. Once the balance is upset, intermediate organic acids accumlate and the pH drops. As a result, the methanogens are further inhibited, and the process eventually fails unless corrective action is taken.

The anaerobic process is essentially controlled by the methane bacteria because of their slow growth rate and sensitivity to environmental change.

Therefore, all successful designs must be based around the special limiting characteristics of these microorganisms.

3.2 SYSTEM OPTIONS

Experimentation over the years has yielded four basic variations in anaerobic sludge digestion: low-rate digestion, high-rate digestion, anaerobic contact, and phase separation.

High-rate digestion is obviously an improvement over low-rate digestion, and its features have been incorporated into standard practice. The anaerobic contact process and phase separation, while offering some specific benefits, have not been used for sludge digestion in full-scale facilities.

3.2.1 Low-Rate Digestion

The simplest and oldest type of anaerobic sludge stabilization process is low-rate digestion. The basic features of this process layout are shown on Exhibit 3.3. Essentially, a low-rate digester is a large storage tank. With the possible exception of heating, no attempt is made to accelerate the process by controlling the environment. Raw sludge is fed into the tank intermittently. Bubbles of sludge gas are generated soon after sludge is fed to the digester, and their rise to the surface provides the only mixing. As a result, the contents of the tank stratify, forming three distinct zones: a floating layer of scum, a middle level of supernatant, and a lower zone of sludge. Essentially, all decomposition is restricted to the lower zone. Stabilized sludge, which accumulates and thickens at the bottom of the tank, is periodically drawn off from the center of the floor. Supernatant is removed from the side of the tank and recycled back to the treatment plant. Sludge gas collects above the liquid surface and is drawn off through the cover.

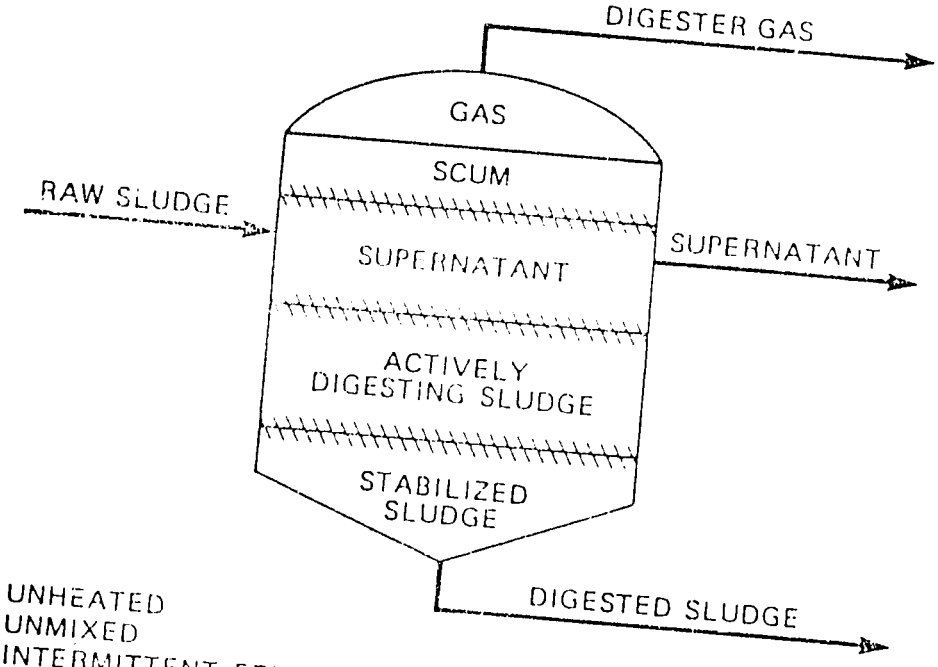

UNHEATED
UNMIXED
INTERMITTENT FEEDING AND WITHDRAWAL
DETENTION TIME: 30-60 DAYS
LOADING RATE: 0.03-0.10 lb VSS/cu ft/day
(0.4-1.6 kg VSS/m^3/day)

Exhibit 3.3
LOW RATE ANAEROBIC DIGESTION SYSTEM

Source: EPA, 1979

3.2.2 High-Rate Digestion

In the 1950s, research was directed toward improving anaerobic digestion. Various studies documented the value of heating, auxiliary mixing, thickening the raw sludge, and uniform feeding. These four features, the essential elements of high-rate digestion, act together to create a steady and uniform environment, the best conditions for the biological process. The net result is that volume requirements are reduced and process stability is enhanced. Exhibit 3.4 shows the basic layout of this process.

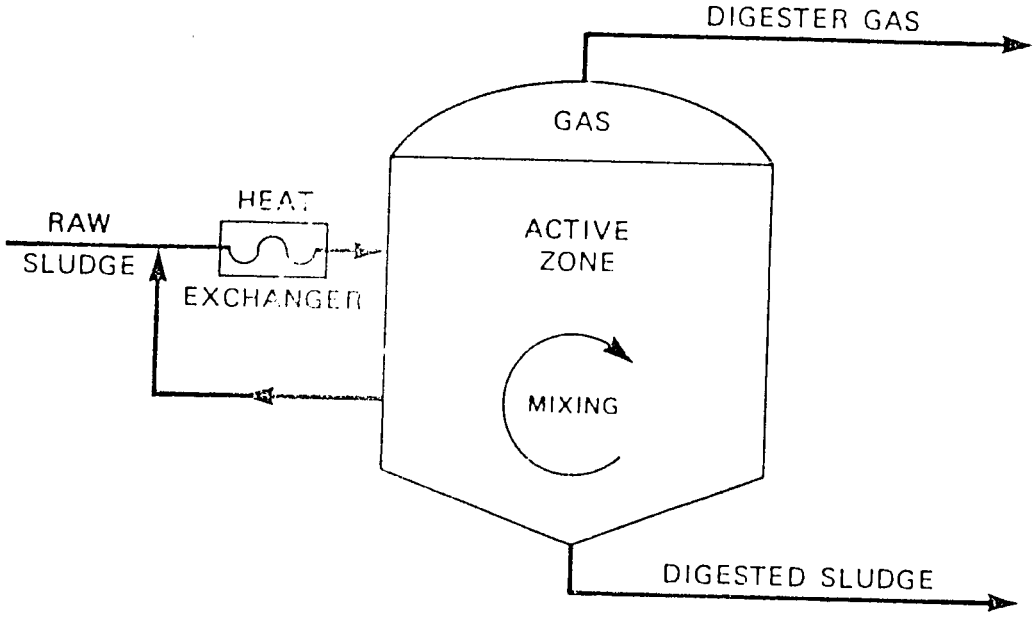

HEATED TO CONSTANT TEMPERATURE
MIXED
CONTINUOUS FEEDING AND WITHDRAWAL
DETENTION TIME: 10-15 DAY MINIMUM
LOADING RATE: 0.10-0.50 lb VSS/cu ft/day
(1.6-8.0 kg VSS/m^3/day)

Exhibit 3.4
SINGLE-STAGE, HIGH-RATE ANAEROBIC DIGESTION SYSTEM

Source: EPA, 1979

3.2.2.1 Heating

The contents of a high-rate digester are heated and consistently maintained to within 1°C of design temperature. Heating is beneficial because the rate of microbial growth and, therefore, the rate of digestion, increases with temperature. Anaerobic organisms, particularly methanogens, are easily inhibited by even small changes in temperature. Therefore, close control of the temperature in a digester helps maintain the microbial balance and improves the digestion process.

Methane production has been reported at temperatures ranging from 0 to as high as 60°C. Most commonly, high-rate digesters are operated between 30 and 38°C. The organisms that grow in this temperature range are called mesophilic. Another group of microorangisms, the thermophilic bacteria, grow at temperatures

between 50 and 60°C. Thermophilic anaerobic digestion has been studied since the 1930s, both at laboratory and plant scale. In general, the advantages claimed for thermophilic over mesophilic digestion are: faster reaction rates that permit lower detention times, improved dewatering of the digested sludge, and increased destruction of pathogens.

Disadvantages of thermophilic digestion include higher energy requirements for heating; lower quality supernatant, containing larger quantities of dissolved materials; and poorer process stability. Thermophilic organisms are particularly sensitive to temperature fluctuation.

3.2.2.2 Auxiliary Mixing

Sludge in high-rate digesters is mixed continuously to create a homogeneous environment throughout the reactor. When stratification is prevented, the entire digester is available for active decomposition, thereby increasing the effective detention time. Furthermore, mixing quickly brings the raw sludge into contact with the microoganisms and evenly distributes metabolic waste products and toxic substances.

3.2.2.3 Pre-thickening

By thickening raw sludge before digestion one can achieve stabilization equivalent to digestion without thickening in one quarter of the digestive volume. Also, heating requirements can be considerably reduced by prethickening, since smaller volumes of raw sludge enter the digesters.

There is, however, a point beyond which further thickening of feed sludge has a detrimental effect on digestion. Two problems can result from over-concentration of feed sludge.

1. Good mixing becomes difficult to maintain. The solids concentration in the digester affects the viscosity, which, in turn, affects mixing. Feed solids concentrations may reach eight to nine percent before mixing is impaired.

2. Chemical concentrations can reach levels that can inhibit microbial activity. A highly thickened feed sludge means that the contents of the digester will be very concentrated. Compounds entering the digester, such as salts and heavy metals, and end products of digestion, such as volatile acids and ammonium salts, may reach concentrations toxic to the bacteria in the digester.

3.2.2.4 Uniform Feeding

Feed is introduced into a high-rate digester at frequent intervals to help maintain constant conditions in the reactor. In the past, many digesters were fed only once a day or less. These slug loadings placed an unnecessary stress on the biological system and destabilized the process. Although continuous feeding is ideal, it is acceptable to charge a digester intermittently, as long as this is done frequently (for example, every two hours).

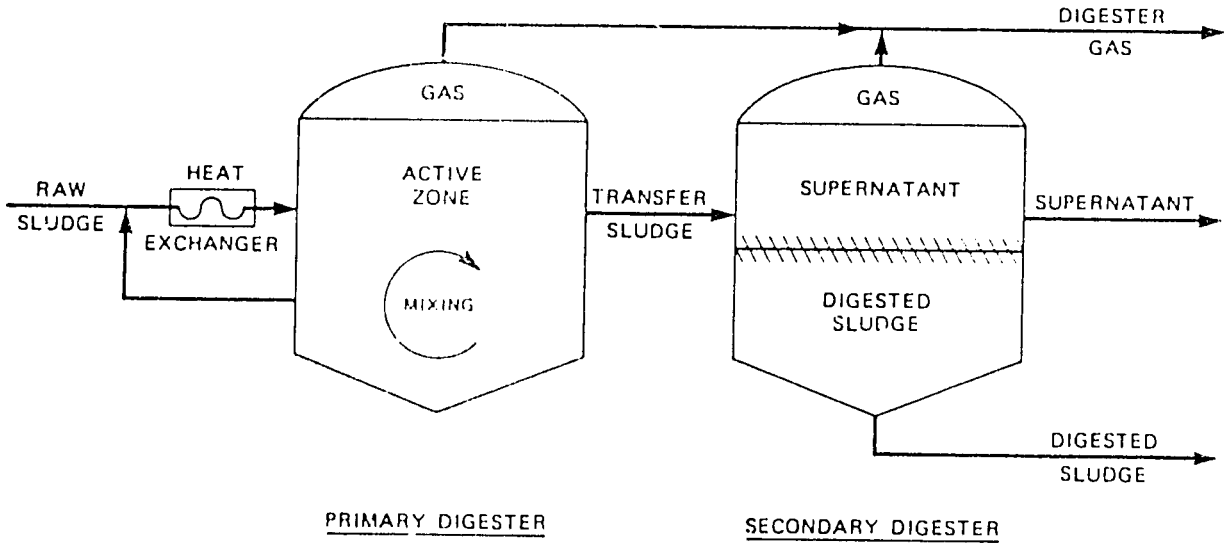

Exhibit 3.5
TWO-STAGE, HIGH RATE ANAEROBIC DIGESTER SYSTEM

Source: EPA, 1979

3.2.2.5 Two-Stage Digestion

Frequently, a high-rate digester is coupled in series with a second digestion tank see Exhibit 3.5. Traditionally, this secondary digester is similar in design to the primary digester, except that it is neither heated nor mixed. Its main

function is to allow gravity concentration of digested sludge solids and decanting of supernatant liquor. This reduces the volume of the sludge requiring further processing and disposal. Very little solids reduction and gas production takes place in the second stage.

- Unfortunately, many secondary digesters have performed poorly as thickeners, producing dilute sludge and a high strength supernatant. The basic cause of the problem is that, in most case, anaerobically digested sludges do not settle readily.

A secondary digester may successfully serve the following functions:

- o Thickening digested primary sludge.
- o Providing standby digester capacity. If the secondary digester is equipped with adequate heating, mixing, and intake piping.
- o Storing digested sludge. A secondary digester fitting with a floating cover can provide storage for sludge.
- o Assuring against short-circuiting of raw sludges through digestion. This may be important for odor control if digested sludge is transferred to open basins or lagoons. It also provides a margin of safety for pathogen reduction.

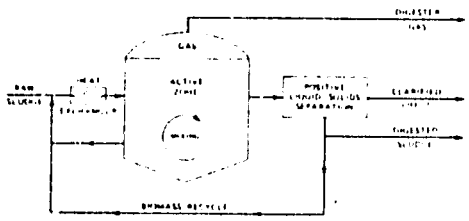

Exhibit 3.6
ANAEROBIC CONTACT PROCESS

Source: EPA, 1979

3.2.3 Anaerobic Contact Process

The anaerobic contact process is the anaerobic equivalent of the activated sludge process. As shown on Exhibit 3.6, the unique feature of this varation

is that a portion of the active biomass leaving the digester is concentrated and then mixed with the raw sludge feed. This recycling allows for adequate cell retention to meet kinetic requirements while operating at a significantly reduced hydraulic detention time.

Positive solids-liquid separation is essential to the operation of the anaerobic contact process. To gain any of the benefits from recycling, the return stream must be more concentrated than the contents of the digester. The difficulties in thickening anaerobically digested sludge have been discussed above. Vacuum degasifiers have been used in anaerobic contact systems to reduce the buoyancy effect of entrapped gas, thereby improving cell settling.

The anaerobic contact process has found application in the treatment of high strength industrial wastes, and it also has been operated successfully at a laboratory scale to stabilize primary sludge. Nevertheless, this system configuration is rarely considered in municipal anaerobic sludge digestion because of the difficulty in achieving the necessary concentration within the return stream.

3.2.4 Phase Separation

As discussed in Section 3.1.3, anaerobic digestion involves two general phases: acid formation and methane production. In the three preceding anaerobic digestion processes, both phases take place in a single reactor. The potential benefits of dividing these two phases into separate tanks were discussed as early as 1958.

Subsequent research has shown that two-phase digestion is feasible for the treatment of sewage sludges. Exhibit 3.7 shows a schematic of this multi-stage system.

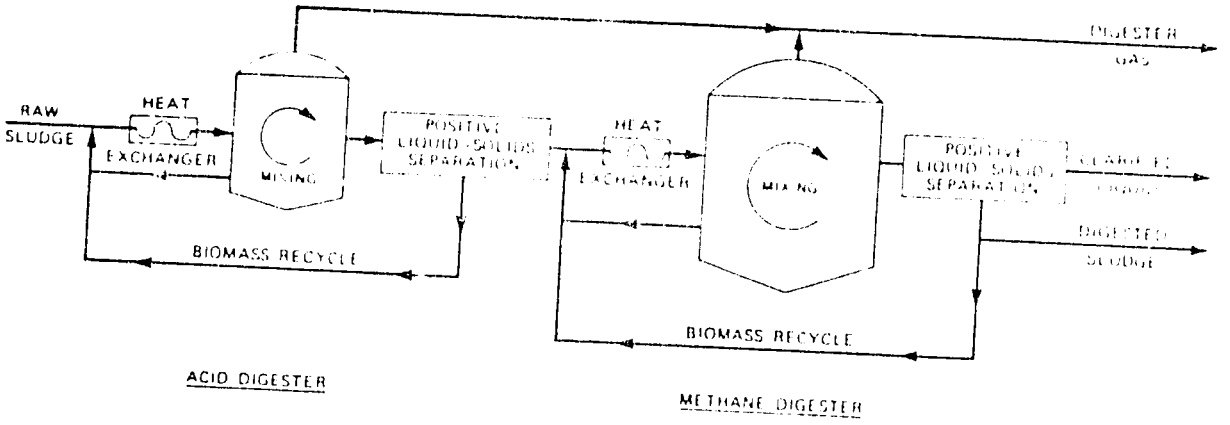

Exhibit 3.7
TWO-PHASE ANAEROBIC DIGESTION PROCESS

Source: EPA, 1979

An effective means of separating the two phases is essential to the operation of anaerobic digestion in this mode. Possible separation techniques include dialysis, addition of chemical inhibitors, adjustment of the redox potential, and kinetic control by regulating the detention time and recycle ratio for each reactor. The latter approach is the most practical and has been developed into a patented process (U.S. Patent 4,022,665), but it has not yet been proved in a full scale plant operation.

3.3 SYSTEM DESIGN CONSIDERATIONS

When designing an anaerobic digestion system, or evaluating proposed designs, several subjects need special consideration. These include the selection of system components, digester sizing, analysis of process performance, and energy utilization.

3.3.1 System Components

3.3.1.1 Tanks

Anaerobic digestion tanks are either cylindrical, rectangular, or egg-shaped. A simplified sketch of each tank design type is shown on Exhibits 3.8, 3.9 and 3.10.

The most common tank design is a low, vertical cylinder ranging in diameter from 6 to 38 m, with a side water depth between 6 to 12 m. Gas-lift mixing is most effective when the ratio of tank radius to water depth is between 0.7 and 2.0. The tanks are usually made of concrete, with either internal reinforcing or post-tensioning rods or straps. The latter design is the least expensive of the two for tanks with diameters greater than 24 meters. Some steel tank digesters have been constructed to diameters of 25 meters.

The floor of a cylindrical digester is usually conical, with a minimum slope of 1:6. Sludge is withdrawn from the low point in the center of the tank. Digestion tanks with "waffle bottoms" also have been put into operation. The principal objective of the waffle floor design is to minimize grit accumulation and to reduce the need for cleaning.

The primary advantages of rectangular digestion tanks are simplified construction and efficient use of a limited plant site. However, it is more difficult to keep the contents of a rectangular digester uniformly mixed because "dead spots" tend to form at the corners.

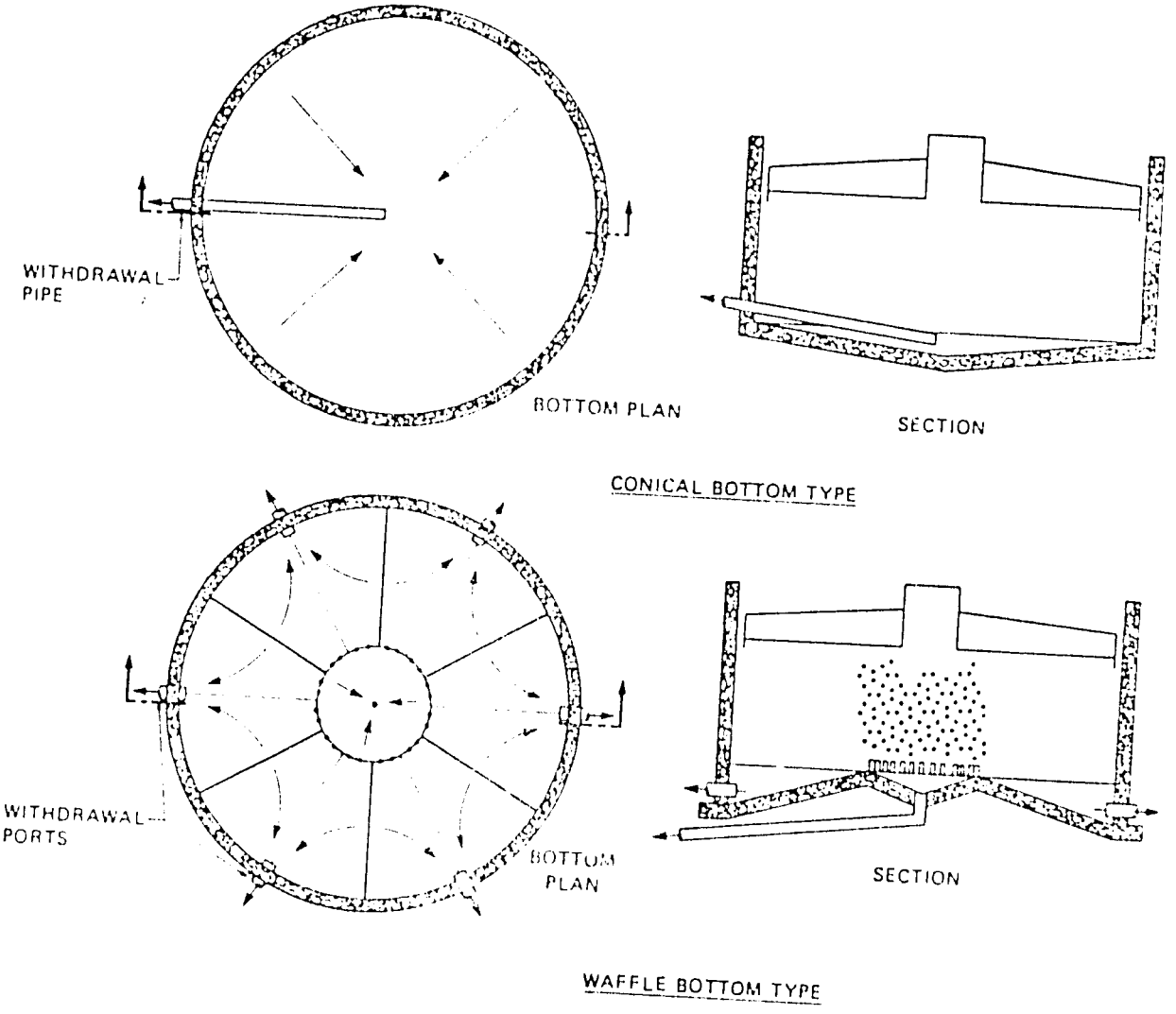

EXHIBIT 3.8
CYLINDRICAL ANAEROBIC DIGESTION TANKS

Source: EPA, 1979

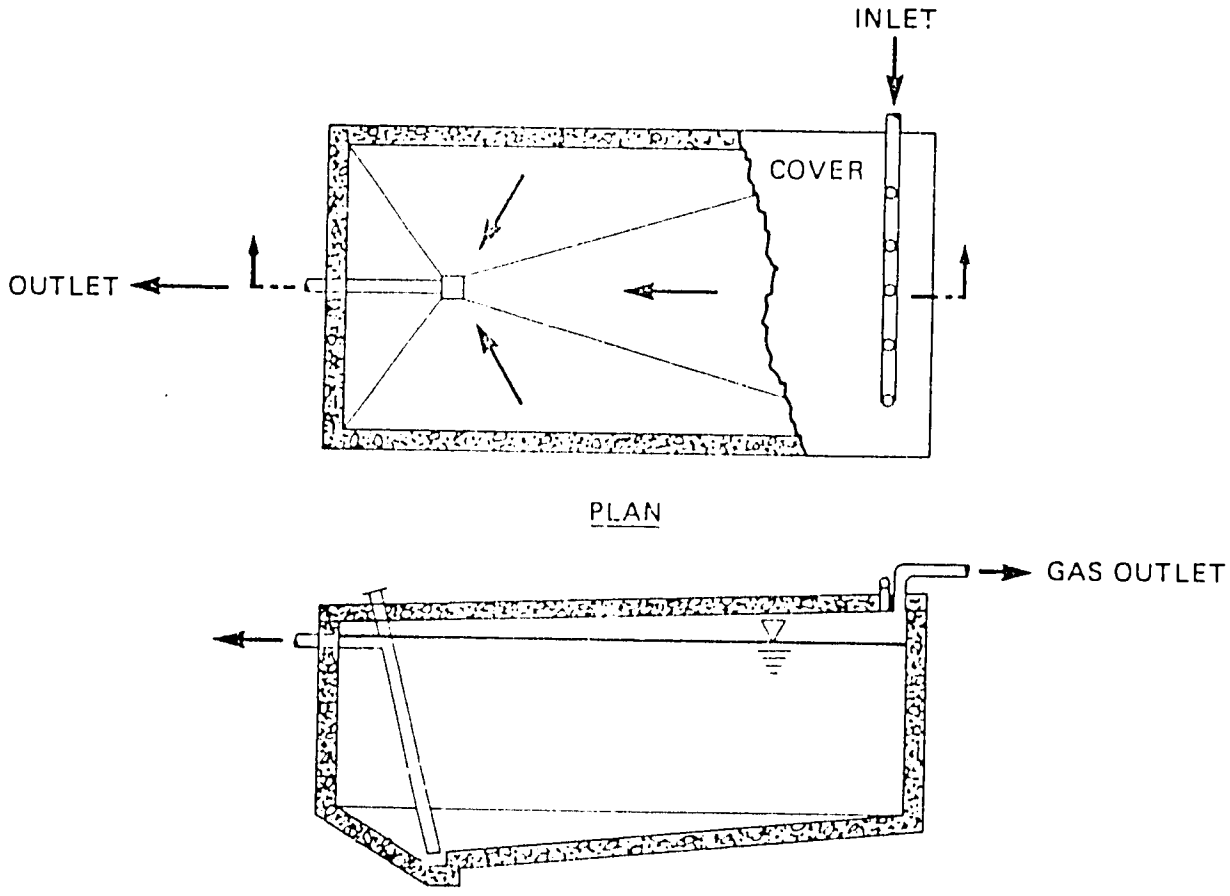

EXHIBIT 3.9
RECTANGULAR ANAEROBIC DIGESTION TANK

Source: EPA, 1979

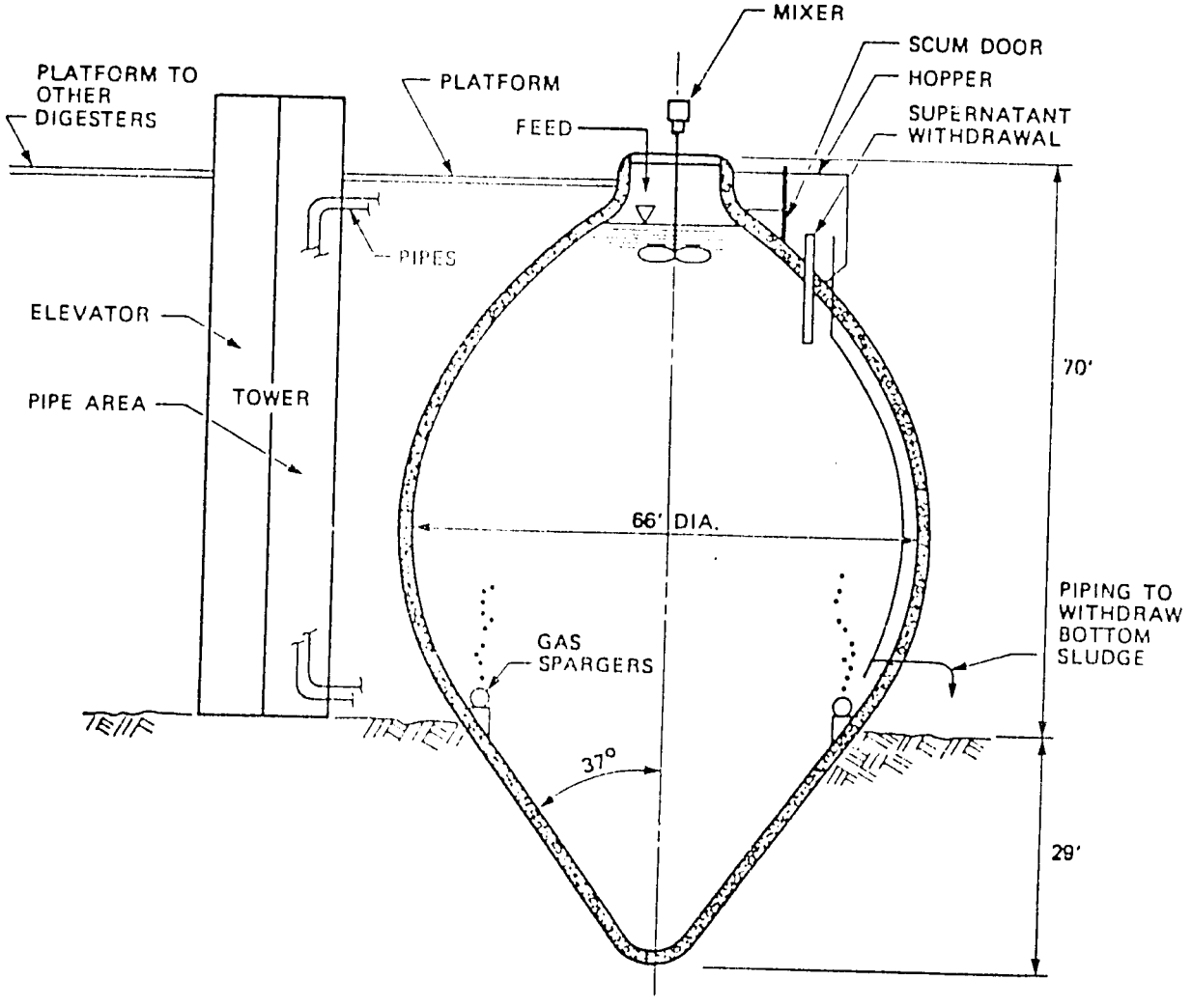

EXHIBIT 3.10

EGG-SHAPED ANAEROBIC DIGESTION TANK AT TERMINAL ISLAND TREATMENT PLANT, LOS ANGELES

Source: EPA, 1979

Egg-shaped digesters have been used extensively in Europe, originating over 20 years ago, and they are now entering U.S. practice. The purpose of forming an egg-shaped tank is to eliminate the need for cleaning. The digester sides form a cone so steep at the bottom that grit cannot accumulate. The top of the digester is small, so that scum contained there can be kept fluid with a mixer and removed through special scum doors. Construction of egg-shaped tanks requires complex form work and special building techniques. Accordingly, capital costs are higher than for other tank designs.

3.3.1.2 Heating

A heating system is an important feature of a modern anaerobic digester. Raising the temperature of the digesting sludge increases the metabolic rate of the anaerobic organisms and reduces digestion time. Maintenance of the temperature consistently within 1°C of design temperature improves process stability by preventing thermal shock.

Methods of Heating

Heating equipment must be capable of delivering enough heat to raise the temperature of incoming sludge to operating levels and to offset losses of heat through the walls, floor, and cover of the digester. Methods used to transfer heat to sludge include:

- Heat exchangers coils placed inside the tank
- Steam injection directly into the sludge
- External heat exchange through which sludge is circulated
- Direct flame heating in which hot combustion gases are passed through the sludge

External heat exchangers are the most commonly used heating method. Internal heat exchanger coils were used in early digesters; however, they are difficult to inspect and clean. This is a serious disadvantage because the

coils become encrusted, reducing the rate of heat transfer. To minimize caking of sludge on the coils, water circulating through the coils is kept between 49 to 55°C.

Steam injection heating requires very little equipment but dilutes the digesting sludge and requires 100 percent boiler makeup water. The cost of this water may be considerable, particularly if hardness must be removed before addition to the boiler.

Three types of external heat exchangers are commonly used for sludge heating: water bath, jacketed pipe, and spiral. In the water bath exchanger, boiler tubes and sludge piping are located in a common, water-filled container. Gravity circulation of hot water across the sludge pipes is augmented with a pump, to increase heat transfer. In a jacketed pipe exchanger, hot water is pumped, counter-current to the sludge flow, through a concentric pipe surrounding the sludge pipe. The spiral exchanger is also a counter-flow design where the sludge and water passageways are cast in a spiral. To minimize clogging with rags and debris, sludge passageways in a heat exchanger should be as large as possible. The interior of these passageways should be easily accessible to allow the operator to quickly locate and clear a blockage.

Each digester should have a separate heat exchanger, and in larger plants, the addition of a single heat exchanger for warming raw sludge should be considered. Cold raw sludge should never be added directly to the digester. The thermal shock will be detrimental to the anaerobic bacteria, and isolated pockets of cold sludge may form. Raw sludge should be preheated or mixed with large quantities of warm circulating sludge before being fed to the digester.

Heat losses can be reduced by insulating the cover and the exposed walls of the digester. Common insulating materials are glass wool, insulation board, urethane foam, lightweight insulating concrete, and dead air space. A facing is placed over the insulation for protection and to improve aesthetics. Common

facing materials are brick, metal siding, stucco, precast concrete panels, and sprayed-on mastic.

3.3.1.3 Mixing

Digester mixing is considered to have the following beneficial effects:

- Maintaining intimate contact between the active biomass and the feed sludge.
- Creating physical, chemical, and biological uniformity throughout the digester
- Rapidly dispersing metabolic end products produced during digestion and any toxic materials entering the system, thereby minimizing their inhibiting effect on microbial activity.
- Preventing formation of a surface scum layer and the deposition of suspended matter on the bottom of the tank. Scum and grit accumulations adversely affect digester performance by consuming active volume in the tank.

While the benefits of digester mixing are widely accepted, controversy and confusion arise in attempting to answer such questions as how much mixing is adequate, and what the most effective and efficient method is for mixing digesting sludge. The degree of mixing attained is closely related to the total power actually delivered to the contents of the tank, irrespective of the actual mixing method used.

A certain amount of natural mixing occurs in an anaerobic digester, caused by both the rise of sludge gas bubbles and the thermal convection currents created by the addition of heated sludges. The effect of natural mixing is significant, particularly in digesters fed continuously and at high loading rates. However, natural mixing does not maximize the benefits of mixing and is insufficient to ensure stable performance of the digestion process. Therefore, mixers are an essential component in a high-rate digestion system. Methods used for mixing include external pumped circulation, internal mechanical mixing, and internal gas mixing.

External Pumped Circulation

Pumped circulation, while relatively simple, is limited in a physical sense because large flow rates are necessary for high-rate digester mixing. However, this method can effect substantial mixing, providing that sufficient energy (5 to 8 W/m^3) is dissipated in the tank. Greater pump power will be required if piping losses are significant. Pumped circulation is used most advantageously in combination with other mixing systems. Besides augmenting agitation, circulation allows external exchangers to be used for heating the digester and uniform blending of raw sludge with heated circulating sludge prior to the raw sludge's entering the digester.

Internal Mechanical Mixing

Mixing by means of propellers, flat-bladed turbines, or similar devices is widely practiced in the process industries. Its usefulness, when applied to wastewater sludge digesters, is limited by the nature of non-homogeneous wastewater sludge. The large amounts of raggy and relatively inert, nonfluid material in wastewater sludge results in fouling of the propellers and subsequent failure of the mechanisms. The practice of grinding screenings within the wastewater flow will accelerate ragging.

Mechanical mixers can be installed through the cover or walls of the tank. In one design, a propeller drives sludge through a draft tube to promote vertical mixing. Wall installations restrict maintenance and repair to the time when the digester has been emptied (usually every three to five years in well maintained plants). Strong mechanical mixing can be effected with about (6.6 W/m^3) of reactor.

Internal Gas Mixing

Several variations of gas mixing have been used for digesters, including:

- The injection of a large sludge gas bubble at the bottom of a 30 cm tube to create piston pumping action and periodic surface agitation.
- The injection of sludge gas sequentially through a series of lances suspended from the digester cover to as great a depth as possible, depending on cover travel.
- The free or unconfined release of gas from a ring of spargers (discharge nozzles) mounted on the floor of the digester.
- The confined release of gas within a draft tube positioned inside the tank.

The first method generally has a low power requirement, but produces only a low level of mixing. As a result, the major benefit derived from its use is in scum control. Lance, free gas lift, and draft tube gas mixing, however, can be scaled to induce strong mixing of the digester contents. The circulation patterns produced by these two mixing methods differ. As shown on Exhibit 3.11 in the free gas lift system, the gas bubble velocity at the bottom of the tank is zero, accelerating to a maximum as the bubble reaches the liquid surface.

Since the pumping action of the gas is directly related to the velocity of the bubble, there is no pumping from the bottom of the tank with a free gas lift system. In contrast, a draft tube acts as a gas lift pump which, by the law of continuity, causes the flow of sludge entering the bottom of the draft tube to be the same as that exiting at the top. Thus, the pumping rate is largely independent of height. The significance of this difference is that draft tube mixers induce bottom currents to prevent, or at least reduce, accumulations of settleable material. Velocity profile studies indicate that lance type mixers induce comparable bottom velocities. Another difference among internal gas mixing systems is that the gas injection devices in a free gas lift system are fixed on the bottom of the digester and thus cannot be removed for cleaning without draining the tank.

To reduce clogging problems, provisions should be made for flushing the gas lines and diffusers with high pressure water. With the lance and draft tube systems, the gas diffusers are inserted from the roof and, therefore, can be withdrawn for cleaning without removing the contents of the tank. A drawback of these systems, though, is that the draft tube and gas lines suspended inside the tank may foul with rags and debris contained in the digesting sludge.

3.3.1.4 Covers

Anaerobic sludge digestion tanks are covered to contain odors, maintain operating temperature, keep out oxygen, and collect digester gas. Digester covers can be classified as either fixed or floating. Cross sections of both types are shown on Exhibit 3.12. Floating covers are most expensive but allow independent additions and withdrawals of sludge, reduce gas hazards, and can be designed to control formation of a scum-mat.

Fixed digester covers are fabricated from steel, reinforced concrete and, since the mid-1970s, corrosion-proof fiberglass reinforced polyester (FRP). In most cases, fixed covers are dome-shaped, although conical and flat concrete covers have been built. Concrete roofs are susceptible to cracking caused by rapid temperature changes. Consequently, gas leakage has been a frequent problem with reinforced concrete covers.

Generally, fixed-cover digesters are operated so as to maintain a constant water surface level in the tank. Rapid withdrawals of digested sludge (without compensating additions of raw sludge) can draw air into the tank, producing an explosive mixture of sludge gas and oxygen. The explosive threshold of sludge gas in air is 5 to 20 percent by volume. In addition, there have been cases in in which the liquid level under the fixed cover has been allowed to increase sufficiently to structurally damage the cover. Usually, this involves a tightly clogged overflow system and a forgotten feed valve.

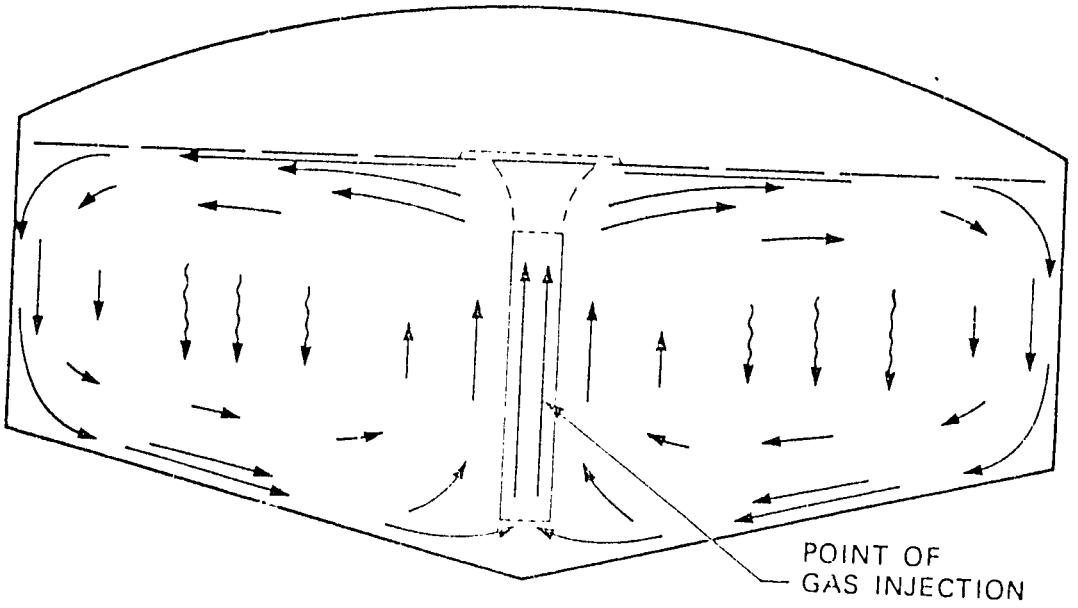

DRAFT TUBE MIXER

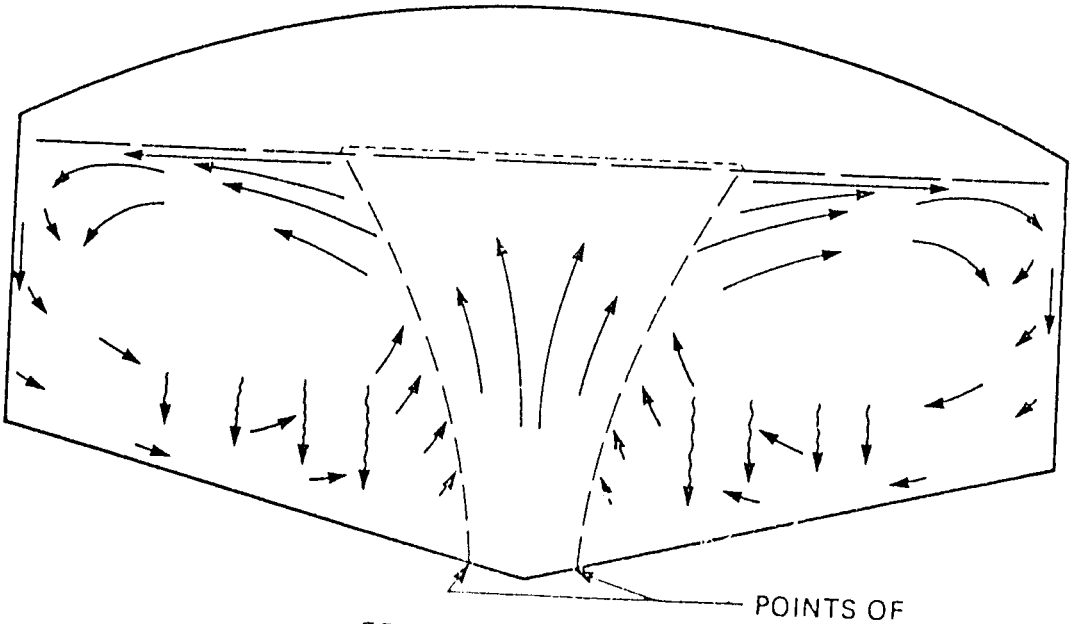

FREE GAS LIFT MIXER

EXHIBIT 3.11

CIRCULATION PATTERNS PRODUCED BY DRAFT TUBE AND FREE GAS LIFT MIXERS
SOURCE: EPA, 1979

Traditionally, floating covers have followed one of two designs: the pontoon or Wiggins type and the Downes type (Exhibit 3.12). Both types of covers float directly on the liquid and commonly have a maximum vertical travel of 2 to 3 m. These cover designs differ primarily in the method used to maintain buoyancy, which, in turn, determines the degree of submergence.

In the Wiggins design, the bottom of the cover slopes steeply along the outer edge. This outer portion of the cover forms an annular pontoon, or float, that results in a large liquid displacement for a small degree of cover-plate submergence. Therefore, Wiggins covers have only a portion of the annular area submerged, with the largest portion of the cover exposed to the gas above the liquid surface. However, for the Downes design, the bottom of the cover slopes gradually throughout the entire radius, thereby providing only a small liquid displacement for a greater degree of cover-plate submergence. Typically, the outer one-third of the radius of the Downes cover is in contact with the liquid. However, it is desirable to increase the degree of submergence adding ballast to the cover, thus keeping the liquid level a few inches within the central gas dome. This keeps floating matter submerged and subject to mixing action, reduces the area exposed to corrosive sludge gas, and adds to cover stability. The fundamental principle used to calculate ballast requirements is that, at equilibrium, a floating cover displaces a volume of liquid equal in weight to the total weight of the cover. Ballast can be added as concrete blocks or as a layer of concrete spread across the upper surface of the cover.

A variation of the floating cover is the floating gas holder. Basically, a gas holder is a floating cover with an extended skirt (up to 3 m high) to allow storage of gas during periods when gas production exceeds demand. However, storage pressure in a gas holder is low--a maximum of 3.7 kPa. Therefore, this type of cover will store up to three to six hours of gas production, based on about 2 m of net travel. Greater storage is achieved by compressing the gas

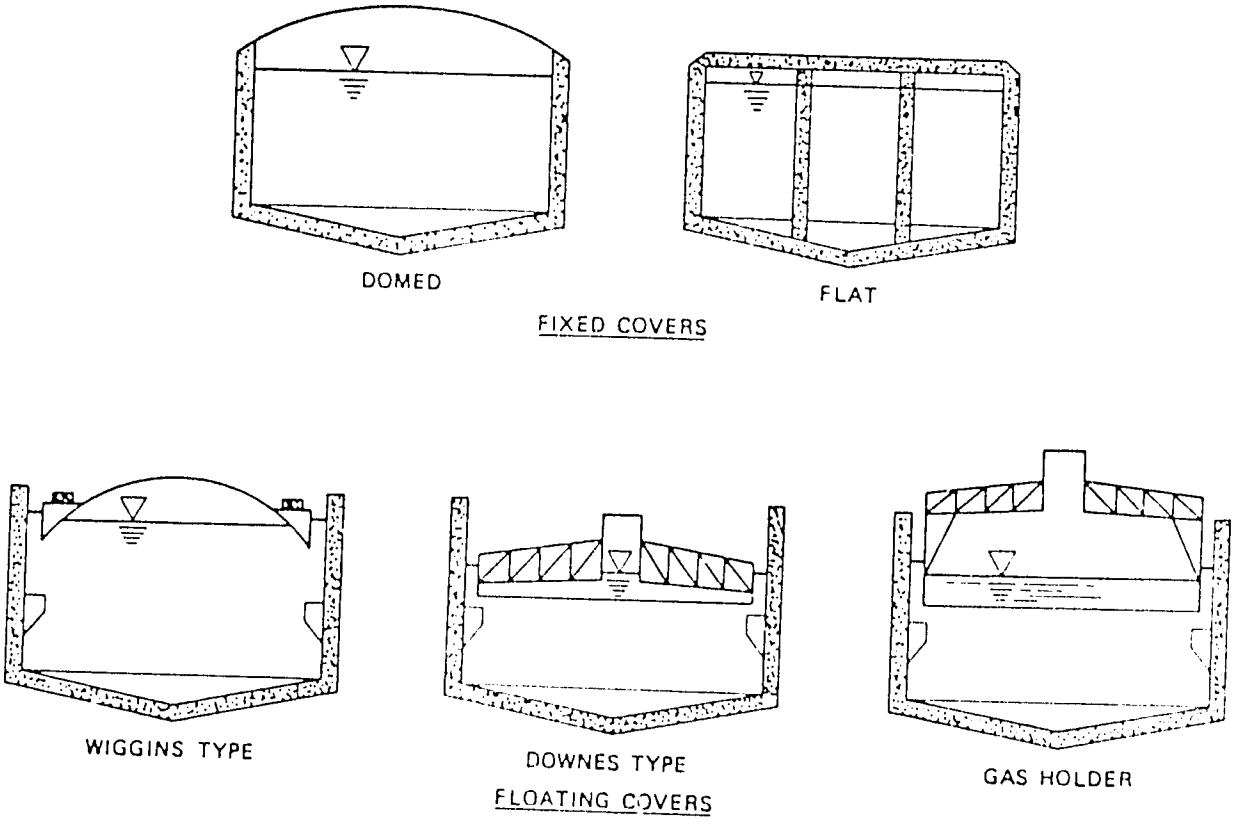

EXHIBIT 3.12
TYPES OF DIGESTER COVERS
SOURCE: EPA, 1979

for high pressure storage in spheres or horizontal cylinders, or by providing a separate low pressure displacement storage tank.

Gas-holding covers are less stable than conventional floating covers because they are supported entirely by a cushion of compressible gas rather than incompressible liquid and because they expose a large side area to lateral wind loads. To prevent tipping or binding, ballast at the bottom of the extended skirt and spiral guides must be provided.

Typical appurtenances for a digester cover include sampling ports; manholes for access, ventilation, and debris removal during cleaning; a liquid overflow system; and a vacuum-pressure relief system equipped with a flame trap. The permissible range of gas pressure under a digester cover is typically 0 to 3.7 kN/m^2.

3.3.1.5 Piping

The piping system for an anaerobic digester is an important component of the design. Many activities take place during the operation of a digester: feeding of raw sludge, circulation of sludge through the heat exchanger, withdrawal of digested sludge and supernatant, and collection of sludge gas. The piping system should be designed to allow these activities to occur concurrently, yet independently. Flexibility should also be built into the piping system to allow operation in a variety of modes and to ensure that digestion can be continued in the event of equipment breakdown or pipe clogging.

Digested sludge is usually drawn off the bottom of the tank, although means to withdraw sludge from at least one other point should be provided in case the main line becomes plugged. A supernatant collection system, when required, should have drawoff points at three or more elevations to allow the operator to remove the clearest supernatant. An unvalved overflow with a vent as a siphon breaker should be provided to ensure that the tank cannot be over-

filled.

Special consideration should be given in the design of sludge-piping systems to prevent the deposition of grease and clogging with debris. Velocities in sludge pipelines should be maintained above 1.2 m/sec to keep sludge solids in suspension. Glass lining of cast iron and steel pipe will prevent the buildup of grease and is recommended for all pipes conveying scum and raw sludge. The grease content of sludge is typically reduced by 50 percent or more during digestion, so that glass lining is not warranted for pipes carrying digested or circulating sludge. Sludge piping is generally kept as short as practicable, with a minimum number of bends. Long radius elbows and sweep tees are preferred for changes in direction. Provisions are commonly made for cleaning sludge lines with steam, high pressure water, or mechanical devices. These provisions should include blind flanges, flushing cocks, and accommodation for thermal expansion.

A problem unique to anaerobic digestion systems is the buildup of crystalline inorganic phosphate deposits on the interior walls of the tank and downstream piping. This encrustation will increase pipeline friction, displace volume in the digestion tank, and foul downstream mechanical equipment. Methods successfully used to prevent this buildup include:

- aerobic digestion of the sludge stream with the highest phosphate content;
- dilution of digested sludge flows to prevent super-saturation and to raise pipeline velocities;
- limiting magnesium ion concentration in the stream;
- substitution of PVC pipe for cast-iron pipe to reduce interior roughness.

3.3.1.6 Cleaning

Anaerobic digestion tanks can become partially filled with a bottom

layer of settled grit and a top layer of floating scum. These accumulations reduce the volume available for active digestion and thereby degrade the performance of the digesters. Periodically, the digestion tank must be drained and these deposits removed. This cleaning process is usually expensive and unpleasant. Furthermore, it can disrupt normal processing of sludge for as long as several months. Therefore, attention should be given during design to (1) reducing the rate at which grit and scum can accumulate, and (2) making it easy to clean the digester when it becomes necessary.

Prevention of Grit and Scum Buildup

The most sensible approach to minimizing digester cleaning is to prevent grit and scum from entering the system. This can be accomplished through effective grit removal in the headworks of the plant coupled with separate processing of scum (for example, incineration or hauling to a rendering plant). A second mitigation measure, which is almost as effective, is to maintain a homogeneous mixture within the digester so that the grit and scum cannot separate out. This is best achieved by strong mixing and positive submergence of the liquid surface under a floating cover (efer to the preceding sections on mixers and covers).

Provisions can also be made to remove grit and scum easily from the digester while normal digestion continues. Grit removal from the digester can be improved by providing multiple withdrawal points or steep floor slopes (as in a waffle bottom or egg-shaped digester). Either an access hatch in the digester cover or pipes extending into the upper levels of the digesting sludge can be used to remove floating material in the tank before it forms a mat. Strong mixing in the tank will carry floating material down into the zone of active digestion, where it it will be broken down.

Facilities for Digester Cleaning

Traditionally, digester cleaning has been a difficult, dirty task. As a result, it is often postponed until tank capacity is severely reduced. Cleaning then becomes even more onerous because of the increased urgency and scope of the operation. If a digester can be cleaned easily, it is much more likely that it will be cleaned regularly.

To ensure that the digesters can be easily cleaned, it is important for the designer to consider the following questions:

- What will be done with the raw sludge while the tank is out of service? Typically, raw sludge flow is distributed to the remaining tanks as long as there is adequate capacity. The problem, however, becomes much more serious in a plant with only one digester. Possibly, a temporary aerobic digester or an anaerobic lagoon can be devised, although odors may be a problem with the latter. Lime may be added to the raw sludge to disinfect it and control odors.
- How will the tank be drained? There is a risk of explosion during the period in which the tank is being emptied, making it important to speed this step in the cleaning process.
- Where will the contents of the tank and the wastewater be taken? Placing these materials on a sand drying bed or in an existing sludge lagoon are two simple solutions to the problem (See Exhibit 3.13). Construction of a small earthen basin, specifically for use during digester cleaning, may be warranted. Hauling material in tank trucks to another treatment plant, or to a suitable disposal site, is another option. Mechanical dewatering equipment may be used to reduce the volume of hauling, but the large proportion of abrasive material (grit) contained in the sludge and wash water may produce excessive wear.

- How will access be provided into the tank? Manholes should be provided through both the cover and the sidewalls of the tank to allow for ventilation, entrance of equipment and personnel, and removal of organic and inorganic debris. Often in the past, the number and size of these openings has not been sufficient for easy cleaning.
- Is there a source of water for washing the tank and refilling it for start-up? Washdown water should be air-gapped (to prevent backflow) and capable of supplying high pressure water. Once the tank has been cleaned, start-up begins by filling the tank with either raw wastewater, primary effluent, or unchlorinated secondary effluent, and bringing the entire contents up to operating temperature. If seed sludge is to be used, it should be fed into the digester as soon as its liquid contents have achieved operating temperature.

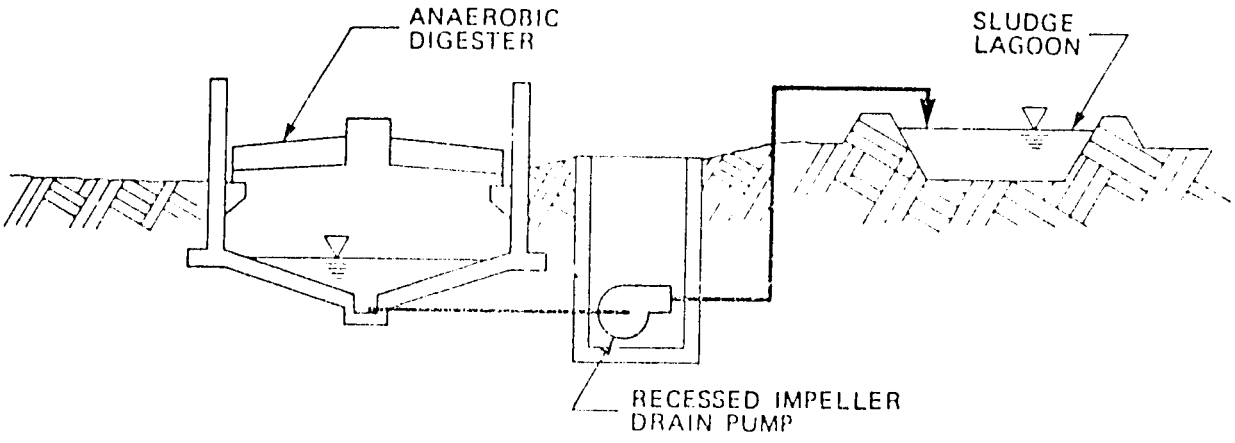

Exhibit 3.13
DIGESTER DRAIN SYSTEM

Source: EPA, 1979

3.3.2 Sizing of Anaerobic Digesters

Determination of digestion tank volume is a critical step in the design of an anaerobic digestion system. First, and most important, digester volume must be sufficient to prevent the process from failing under all expected conditions. Process failure is defined as the accumulation of volatile acids and the cessation of methane production. Once a digester turns sour, it usually takes at least a month to return it to service. Meanwhile, raw sludge must be diverted to the remaining digesters, which may become overloaded in turn. Furthermore, sludge from a sour digester has a strong, noxious odor, and therefore, its storage and disposal are a great nuisance.

Digester capacity must also be large enough to ensure that raw sludge is adequately stabilized. "Sufficient stabilization" must be defined on a case-by-case basis, depending on the processing and disposal after digestion.

3.3.2.1 Loading Criteria

Traditionally, volume requirements for anaerobic digestion have been determined from empirical loading criteria. The oldest and simplest of these criteria is per capita volume allowance. Exhibit 3.14 lists typical design values. This crude loading factor should be used only for initial sizing estimates, since it implicitly assumes a value for such important parameters as per capita waste load, solids removal efficiency in treatment, and digestibility of the sludge. These parameters vary widely from one area to the next and cannot accurately be lumped into one parameter.

A more direct loading criterion is the volatile solids loading rate, which specifies a certain reactor volume requirement for each unit of volatile dry solids in the sludge feed per unit of time. This criterion has been commonly used to size anaerobic digesters. However, as early as 1948, it was recognized that process performance is not always correlated with the volatile solids loading

rate. The problem stems from the fact that this parameter is not directly tied to the fundamental component in anaerobic digestion, the microorganisms actually performing the stabilization.

Exhibit 3.14
TYPICAL DESIGN CRITERIA FOR SIZING MESOPHILIC ANAEROBIC SLUDGE DIGESTERS

Parameter	Low-rate digestion	High-rate digestion
Volume criteria, cu ft/capita		
Primary sludge	2-3	1.3
Primary sludge + Trickling filter humus	4-5	2.7 - 3.3
Primary sludge + Activated sludge	4-6	2.7 - 4
Solids loading rate, lb VSS/day/cu ft	0.04 - 0.1	0.15 b- 0.40
Solids retention time, days	30-60	10-20

1 cu ft/capita = .028 m^3/capita
1 lb/day/cu ft = 16.0 kg/day/m^3

Source: EPA, 1979

3.3.2.2 Solids Retention Time

The most important consideration in sizing an anaerobic digester is that the bacteria must be given sufficient time to reproduce so that they can (1) replace cells lost with the withdrawn sludge, and (2) adjust their population size to follow fluctuations in organic loading.

To ensure that the process will not fail, it is critical to know the growth rate of the bacteria in the digester. It is not practical to measure directly the rate at which the anaerobic bacteria multiply. However, as these bacteria grow and reproduce, they metabolize the waste and produce end products. As a result, the bacterial growth rate can be determined by monitoring the rate

at which substrate is reduced and end products are produced. Studies of these rates of change began in the late 1950s and have led to an understanding of digester process kinetics.

The key design parameter for anaerobic biological treatment is the biological solids retention time (SRT), which is the average time a unit of microbial mass is retained in the system. SRT can be operationally defined as the total solids mass in the treatment system divided by the quantity of solids withdrawn daily. In anaerobic digesters without recycle, the SRT is equivalent to the hydraulic detention time. Recycling of a concentrated stream back to the head of the system, which is the unique feature of the anaerobic contact process, increases the SRT relative to the hydraulic detention time.

Exhibit 3.15 illustrates the relationship between SRT and the performance of a lab-scale anaerobic digester fed with raw primary sludge. Specifically, the figure shows how the production of methane, as well as the reduction of degradable proteins, carbohydrates, lipids, chemical oxygen demand, and volatile solids, are related to the SRT. As the SRT is reduced, the concentration of each component in the effluent gradually increases until the SRT reaches a value beyond which the concentration rapidly increases. The SRT can be lowered to a critical point (SRT_c) beyond which the process will fail completely. Calculations based on process kinetics predict an SRT_c of 4.2 days for the digestion of wastewater sludge at 35°C.

Temperature has an important effect on bacterial growth rates and, accordingly, changes the relationship between SRT and digester performance. The effect of temperature on methane production and volatile solids reduction is shown on Exhibit 3.16. The significance of this relationship is that stabilization is slowed at lower temperatures, with 20°C appearing to be the minimum temperature at which sludge stabilization can be accomplished within a practical solids retention time. The critical minimum solids retention time (SRT^c) is

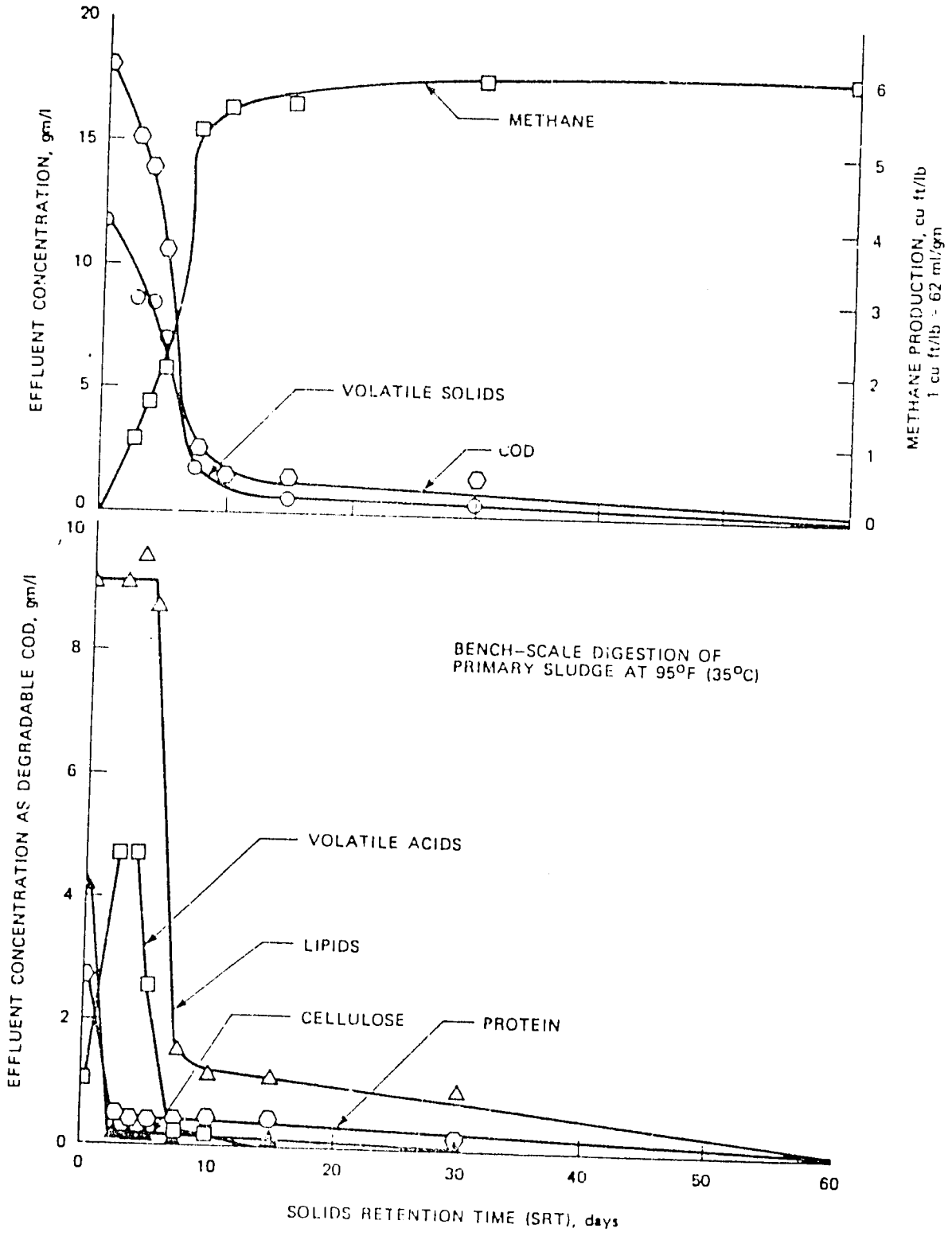

EXHIBIT 3.15

EFFECT OF SRT ON THE RELATIVE BREAKDOWN
OF DEGRADABLE WASTE COMPONENTS AND
METHANE PRODUCTION
SOURCE: EPA, 1979

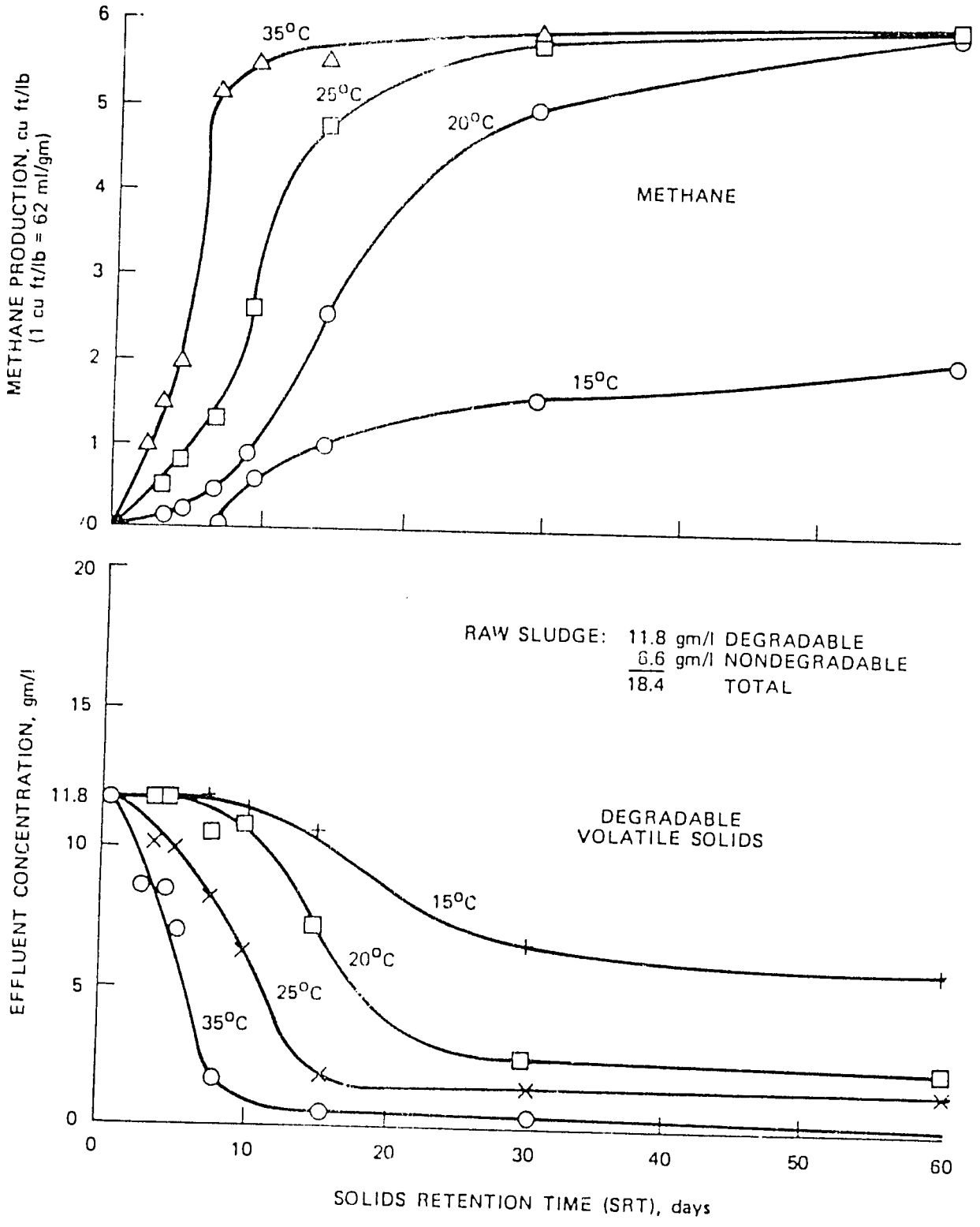

EXHIBIT 3.16

EFFECT OF TEMPERATURE AND SRT ON THE PATTERN OF METHANE PRODUCTION AND VOLATILE SOLIDS BREAKDOWN
SOURCE: EPA, 1979

also affected by temperature.

3.3.2.3 Recommended Sizing Procedure

The size of an anaerobic digester should be adequate to ensure that the solids retention time in the system never falls below a certain critical value. This design solids retention time (SRT_d) and the conditions under which it must be met should be selected with care. As a result, SRT_d must be considerably greater than SRT_c. The recommended minimum safety factor is 2.5.

Several researchers have recommended ten days a a minimum acceptable solids retention time for high-rate digesters operating near 35°C. This sizing criterion is reasonable, since it corresponds with the replication time of the slowest growing bacteria. However, this criterion must be met under all expected conditions, including:

- Peak hydraulic loading. This value should be estimated by combining poor thickener performance with the maximum plant loading expected during seven continuous days during the design period.
- Maximum level below highest level. Approximately one meter of liquid level variability must be retained to allow for differences in the rate of feeding and withdrawal and to provide reasonable operational flexibility.

These conditions may occur simultaneously and, therefore, the designer should compound them when applying the ten-day SRT_d sizing criterion. In the past, "liberal" detention time criteria have been applied at the average conditions. However, problems arise during critical periods, not when conditions are average. For this reason, the most rational approach to sizing a full-scale facility is to apply experimentally based design criteria (increased by a reasonable margin of safety) to the actual set of expected peak conditions.

3.3.3 Process Performance

The primary result of anaerobic sludge digestion is the reduction of both volatile solids and pathogenic organisms. Volatile solids are degraded into

smaller molecules, and eventually a large portion is converted into gas, primarily methane (CH_4) and carbon dioxide (CO_2). Pathogens are reduced through natural die-off because the anaerobic environment is unsuitable for their survival. Many other chemical and physical changes occur during anaerobic sludge digestion, some of which are described later in this section.

It is not possible to predict precisely the nature and extent of all changes occurring during anaerobic digestion. Wastewater sludges have a complex, variable character and there are many reactions that occur during digestion within the mixed culture of ananerobic microorganisms. This section describes general trends of digester performance and identifies the major influences on anaerobic digestion.

Three topics are discussed in detail: solid reduction, gas production and supernatant quality.

3.3.3.1 Solids Reduction

Solids reduction is one of the main objectives of anaerobic digestion. It not only makes the sludge less putrescible but also reduces the amount of solids for ultimate disposal. It is usually assumed that this reduction takes place only in the volatile portion of the sludge solids. Therefore, a common measure of digester performance is the percent of the volatile solids destroyed. Volatile solids reduction in anaerobic digesters usually ranges between 35 to 60 percent. The degree of volatile solids reduction achieved in any particular application depends on both the character of the sludge and the operating parameters of the digestion system.

The character of the sludge determines the upper limit for volatile solids reduction. Not all of the volatile solids can be converted by the anaerobic bacteria. Limited research suggests that only 60 to 80 percent of the volatile solids in municipal wastewater sludge is readily biodegradable. The remaining

fraction consists chiefly of inert organics such as lignins and atannins. These complex organic molecules may eventually be degraded when held for several months in a sludge lagoon, but can be considered indigestible within the contact times normally associated with anaerobic digestion.

The most important operating parameters affecting volatile solids reduction are solids retention time and digestion temperature.

3.3.3.2 Gas Production

A particular advantage of anaerobic digestion over other methods of sludge stabilization is that it produces a medium-energy gas as a by-product. Digester gas can be burned to provide heat and generate electricity for the treatment plant. Several off-site uses of digester gas are also feasible, including: blending with the domestic gas supply, generation of steam or electricity for sale to adjacent industries, bottling for use as a portable fuel, and production of chemicals such as ammonia and methanol. Before any utilization program can be established, the quantity and quality of available digester gas must be determined.

The generation of digester gas is a direct result of the destruction of solids. The microbiology and biochemistry of this conversion are described in Section 3.1.3. Because of this close relation between gas production and solids retention, gas production is best expressed in terms of the volume of gas produced per unit of solids destroyed. This parameter, termed specific gas production, is commonly expressed as cubic meters of gas per kg of volatile solids (VS) destroyed. Specific gas production values for the anaerobic digestion of some of the principal components of sludge are presented in Exhibit 3.17. Fatty substances have a higher energy content per unit weight than other forms of organic matter. Thus, the breakdown of a sludge with a high proportion of fats, oils, and greases can be expected to yield a greater quantity of gas per

unit of solids destroyed.

Specific gas production for anaerobically digested municipal sludges generally ranges between 0.75 to 1.1 m^3/kg of volatile solids destroyed. Exhibit 3.18 shows how specific gas production is affected by temperature. Conversion of volatile solids is most efficient at about 35°C and 54°C. Detention time, or SRT, has essentially no effect on specific gas production as long as the SRT_c is exceeded. Lengthening the SRT, however, increases the total quantity of gas produced because volatile solids reduction is increased. As discussed earlier, the mix of organic compounds in the feed sludge strongly influences specific gas production values.

Instantaneous rates of gas production can vary widely becuse of fluctuations in the feed rate, sludge composition, and bacterial activity. These momentary peaks must be considered in sizing gas piping and storage facilities. Generally, gas production increases soon after sludge is fed to the digester. Therefore, continuous feeding aids in providing uniform gas production.

The characteristics of sludge gas are shown in Exhibit 3.19. A healthy digestion process produces a digester gas with about 65 to 70 percent methane, 30 to 35 percent carbon dioxide, and very low levels of nitrogen, hydrogen, and hydrogen sulfide. The carbon dioxide concentration of digester gas has been found to increase with the loading rate.

The hydrogen sulfide (H_2S) content of the gas is affected by the chemical composition of the sludge. Sulfur-bearing industrial wastes and saltwater infiltration tend to increase H_2S levels in sludge gas. However, metal wastes and metal ions added during chemical treatment or conditioning can reduce the amount of H_2S in the sludge by forming insoluble salts. H_2S, a major source of odors in digested sludge, can also become corrosive in the presence of moisture, by forming sulfuric acid.

Although the hydrogen content has some effect on the heat value, methane

EXHIBIT 3.17

GAS PRODUCTION FOR SEVERAL COMPOUNDS
IN SEWAGE SLUDGE

Material	Specific gas production, m^3/kg destroyed	CH_4 content, percent
Fats	1.1 - 1.4	62 - 72
Scum	0.9 - 1.0	70 - 75
Grease	1.1	68
Crude Fibers	0.8	45 - 50
Protein	0.7	73

Source: EPA, 1979

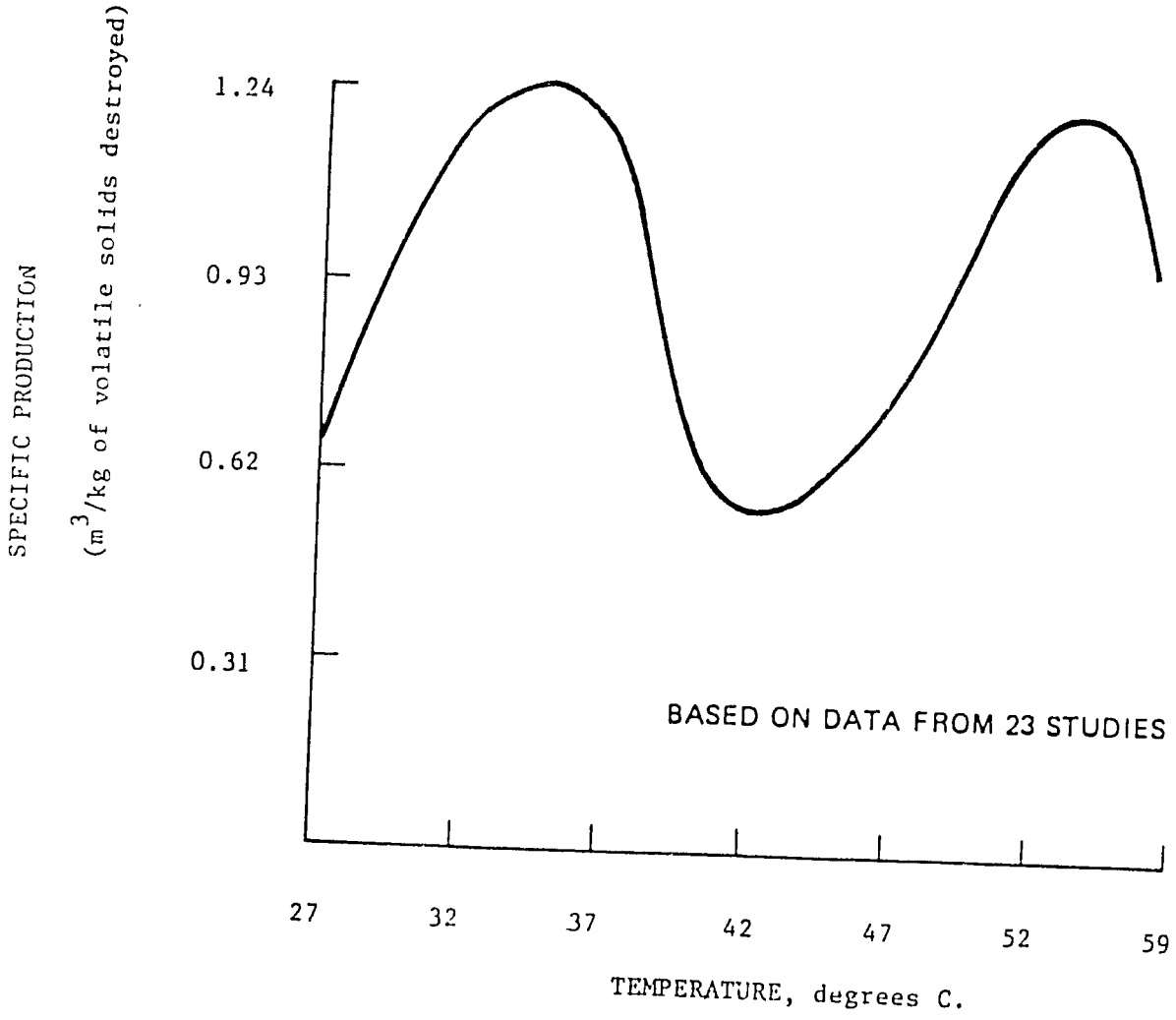

EXHIBIT 3.18
EFFECT OF TEMPERATURE ON GAS PRODUCTION
BASED ON EPA, 1979

is the chief combustible constituent in digester gas. The high heat value for digester gas ranges between 18,400 to 25,800 kJ/m^3, with an average of about 23,600 kJ/m^3.

3.3.3.3 Supernatant Quality

Supernatant, or liquid run-off, from an anaerobic digestion system can contain high concentrations of organic material, dissolved and suspended solids, nitrogen, phosphorus, and other materials that, when returned to the plant, may impose extra loads on other treatment processes and effluent receiving waters. It is very difficult to generalize about supernatant quality because it can vary widely, even at a single treatment plant. The suspended solids, biochemical oxygen demand, soluble phosphorus, phenols, and ammonia in the supernatant can all cause problems in a treatment plant. If the anaerobic supernatant must be returned to the plant flow for treatment, it should be recycled continuously to spread the loading.

3.3.3.4 Digester Operation

An effective anaerobic digester will not run automatically without attention. In general, wastes should be loaded frequently, preferably every few hours, but not less than daily, in order to avoid losing solids volatility to oxidation and aerobic bacteria. Wastes fed to the digester should be measured by a count of pump timing, or direct weighing. Similarly, gas production should be continuously metered and recorded daily, as any fall off of gas production will usually be the first signal of digester upset.

The feedstock should be inspected before it enters the digester. Slugs of unusual constituents are to be avoided. A good rule of thumb is not to feed more than 10% by weight of any out-of-the-ordinary material to the tank. Toxic substances such as chlorinated hydrocarbons, pesticides, strong acids and bases, and heavy metals should never enter the digester at all. In addition, straw and

EXHIBIT 3.19

COMPOSITION OF BIOGAS

GAS		PERCENT
CH_4	Methane	55-70%
CO_2	Carbon Dioxide	30-45%
N_2	Nitrogen	Trace*
H_2	Hydrogen	0.1-2%
CO	Carbon Monoxide	0.1%
O_2	Oxygen	Trace*
H_2S	Hydrogen Sulfide	Trace-0.3%
H_2O	Water Vapor	

* The presence of significant quantities of these gases indicates air leaks into the digester.

NOTE: H_2S becomes toxic at concentrations in air of around 0.04%.
CO is a threat at 0.05%.

Source: TVA, 1981

other floatable material should be avoided because they tend to form an undesirable scum layer on the surface of digesting fluid. Excess water will also slow digestion by diluting the active sludge mass, and will waste energy by increasing heating requirements.

The digester itself should be checked daily for acidity. Also, the color and odor of the digesting or digested sludge should be monitored every day. Sludge color should be black -- a grey color indicates acid build-up and insufficient digestion. The odor of a healthy digester id described as dry and pungent; that of a "sour" digester as nauseating, acidic and fatty. Most digester failures are due to excess acidity, caused by overloading.

A small, bench-scale digester is often helpful in testing sludge, evaluating methane production, and identifying toxic materials.

In order to begin digestion, a starter "seed" of previously digested sludge should be fed into the digester and then raw sludge added to it gradually.

It will be necessary to empty any digester for accumulated solids removal every few years, depending on system design and degree to which indigestible solids have been introduced into the digester feed. At such a time, it is highly desirable to have more than one digester, so that gas production can continue and a fresh starter will be readily available for restarting the cleaned-out digester. Complete mix digestion tanks will require considerable labor to clean, with shovels, buckets and high-pressure hoses; while a well-designed canal-type digester can be cleaned with a front end loader or similar farm equipment.

3.3.4 Energy Production

As Exhibit 3.20 indicates, the energy value of methane generated from the anaerobic digestion process exceeds the energy requirements of the digestion process. The gas generated may be sufficient to supply the energy needs of the

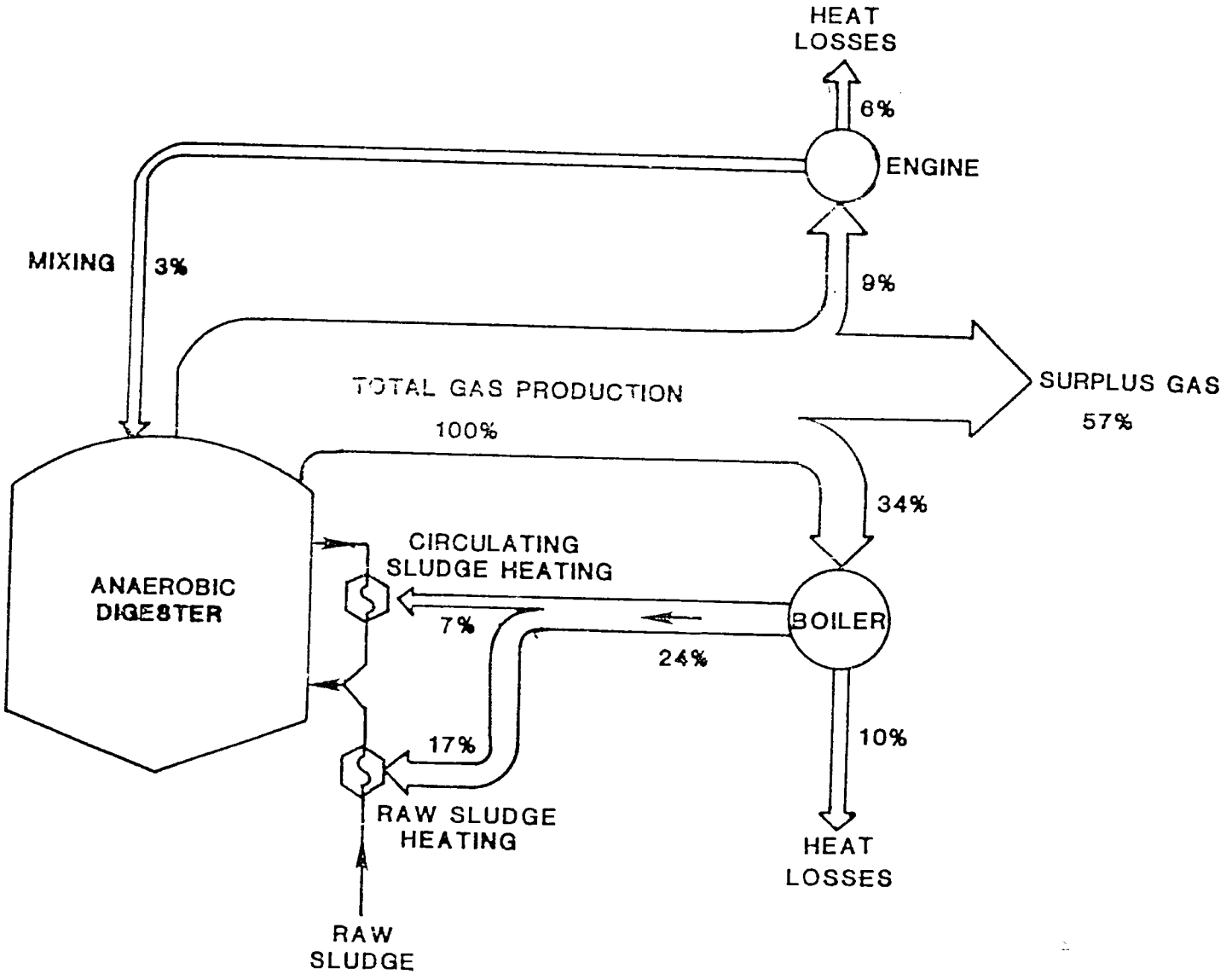

EXHIBIT 3.20 ENERGY FLOW THROUGH AN ANAEROBIC SLUDGE DIGESTION SYSTEM

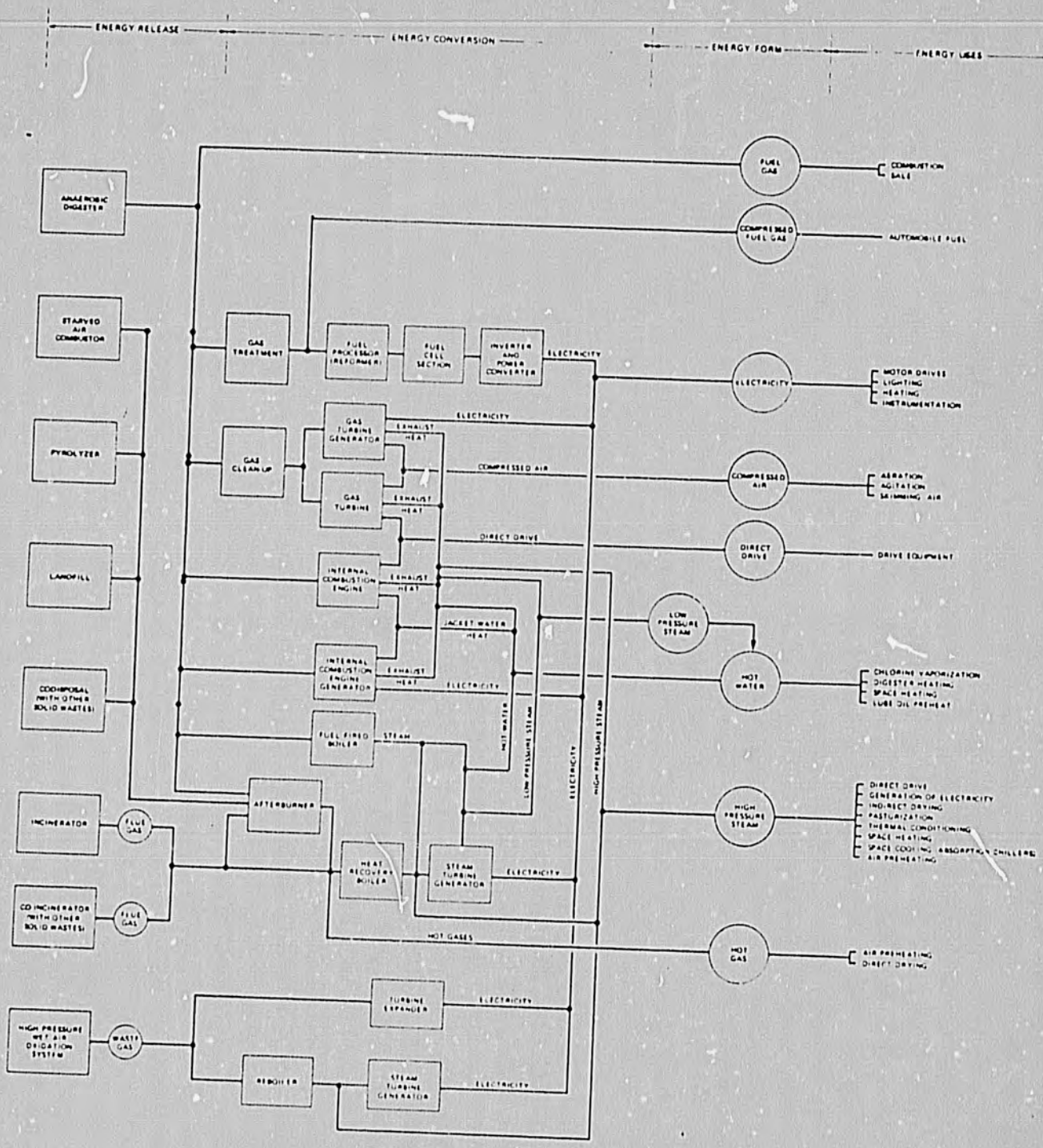

EXHIBIT 3.21

THE RELEASE, CONVERSION, FORMS AND USES OF ENERGY FROM SLUDGE
SOURCE: EPA, 1979

entire wastewater treatment plant, with excess gas available for sale. The same is true for manure digesters on farms.

Exhibit 3.21 shows, on one diagram, processes which release energy from sludge; devices which convert the released energy to useful forms; useful energy forms; and suggested applications of recovered energy, either at the plant (or farm) or off-site. Special consideration must be made when designing processes to recover energy from sludge. Some of these considerations are discussed below.

3.3.4.1 Treatment of Digester Gas

The chemical composition of digester gas has already been described above. Of the common constituents, only hydrogen sulfide (H_2S) and water vapor (H_2O) are of serious concern for reliable engine operation. Much of the suspended water vapor in wet digester gas can be precipitated out with a simple water trap; along with the water vapor goes a significant portion of the H_2S. The remaining H_2S may range widely in concentration. Some plants have successfully designed and operated their engines to allow for residual H_2S by replacing critical engine parts with substitutes made from corrosion resistant metals. Others have installed devices to remove it from the digester gas. Passing the gas through heated iron oxide (iron sponge) is one of the simplest techniques to remove H_2S when concentrations are low. When H_2S levels in the digester gas are very low, successful engine operation may occur with only the water trap.

The large carbon dioxide content of most digester gas is not a problem in engine operation, although it does not combust and hence leads to engine-de-rating. Some engines can function with CO_2 levels as high as 75% of total gas volume. Only if the digester gas is to be sold as pipeline-quality gas would CO_2 removal be necessary.

3.3.4.2 Corrosion Factors

One of the major problems associated with recovering heat from digester gas is corrosion caused by sulfur oxides such as SO_2 and SO_3, which are combustion products of H_2S. If the exhaust gas temperature is allowed to drop below its dew point, the condensate which forms is acidic from absorbing SO_2 and SO_3. The acidic condensate is corrosive to metallic elements of the exhaust-carrying system. There are two alternatives to alleviate the problem. The first is scrubbing of H_2S from the gas before combustion. The second is maintaining the exhaust gas at temperatures considerably greater than its dew point, to prevent condensation. This generally requires that the water temperature of any boiler or engine using unscrubbed gas be at least 100°C. Also, stack gas temperatures should not be allowed to drop below 177°C. Use of unscrubbed digester gas is preferred. Equipment fueled by unscrubbed digester gas should not be used in intermittent service, since condensation will occur each time the unit is shut down.

Shut downs should be minimized. Similarly, the equipment should be designed so that even when operated at its lowest loadings, exhaust gas temperatures are sufficiently high to prevent condensation.

3.3.4.3 Boilers

Steel tube boilers and cast iron sectionalized boilers have both worked well with untreated digester gas as long as the water or steam temperatures are maintained above 100°C. Exhibit 3.22 illustrates an effective method for hot water production using a boiler to transfer heat via a thermal siphon, using natural circulation. If heat supply exceeds heat demand, the excess heat is released by venting steam from the condensers. Temperature control is automatic, being set by the vent pressure. Advantages of this system are simplicity, elimination of costs associated with pumping, automatic temperature control,

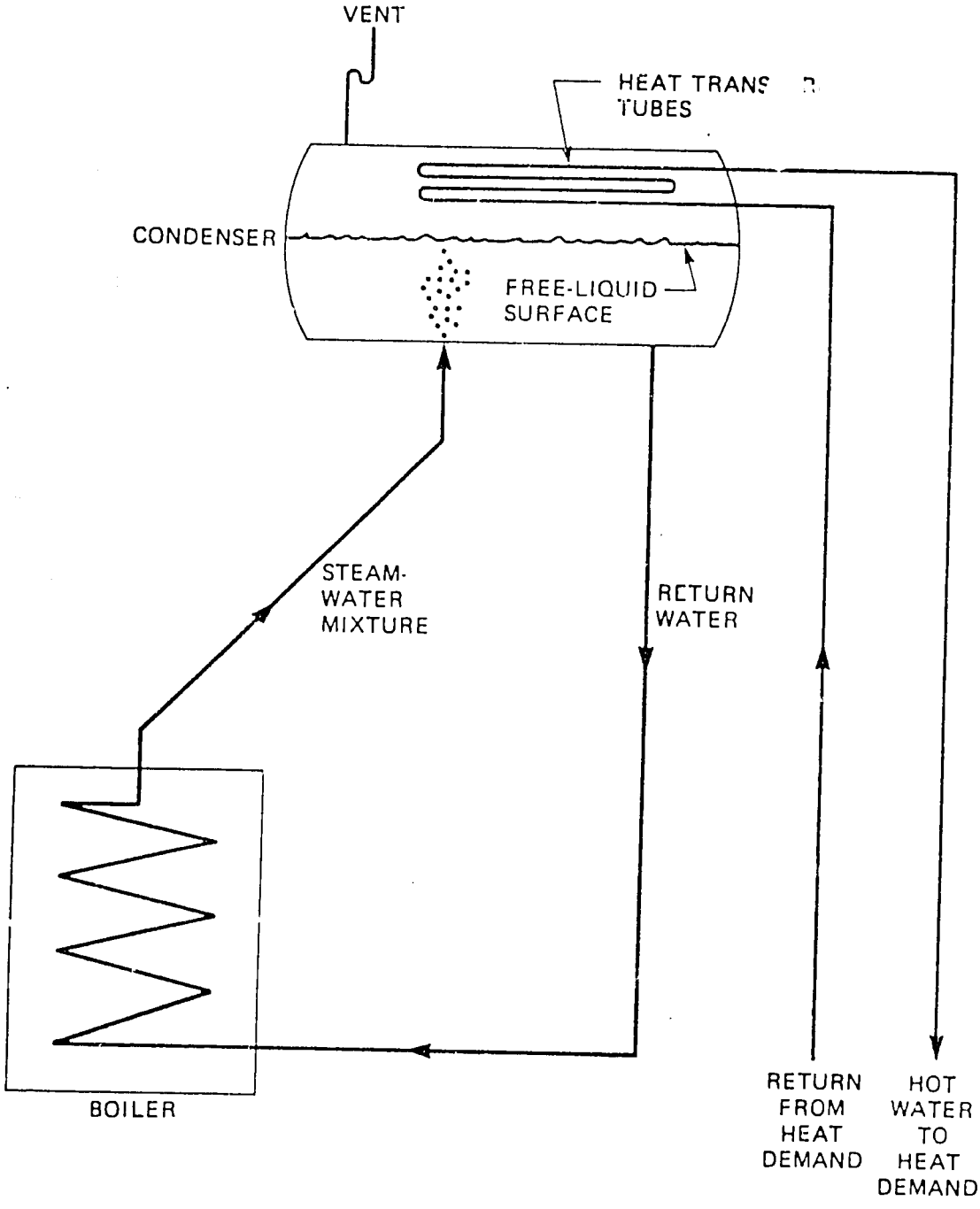

Exhibit 3.22

SCHEMATIC OF COMBINED BOILER/CONDENSER
SYSTEM FOR HOT WATER PRODUCTION
SOURCE: EP', 1979

and independent operation of the boiler from other heat sources and heat demands. Independent operation is particularly important; it allows the boiler to operate at its own best conditions, without being affected by the operations of other components of the system.

3.3.4.4 Prime Movers

Digester gas can be used to fuel reciprocating engines, steam turbines and gas turbines. Prime movers convert part of the fuel's energy to work, rejecting the remainer as waste heat. Thermal efficiency can be dramatically improved as portions of the rejected heat can be recovered and used for process or building heating. Waste heat recovery is more efficient if prime movers are run hot, since heat rejected at higher temperatures can be put to a greater variety of uses than heat rejected at low temperature. Also, exhaust systems last longer because SO_2/SO_3 corrosion is reduced.

There are a number of different engine types which can operate on medium-Btu gas as produced in anaerobic digestion, including:

1) Compression ignition engines, modified for dual fuel combustion, require from 2-15% (average, 5%) diesel fuel for ignition and top end lubrication. Two fuel delivery systems are required, as well as modified carburation. Maximum fuel energy which can be converted to shaft housepower is 32-36%. Twenty percent, or lower, efficiency when operating at partial load is common.

2) Spark ignition engines have had somewhat less use operating on biogas; generally in smaller horsepower sizes than the dual-fuel engines. Natural gas or propane may be used as supplemental fuel. Slow speed, high compression engines may yield 32-36% power extraction rates; high speed, low compression units, only 20-25%. Partial load again decreases engine efficiency.

3) Gas turbines have some theoretical advantages over reciprocating engines, but little successful experience with their use on digester gas has

been documented and the selection of turbine sizes available under 500KW is limited. Mechanical power efficiency ranges from 17-30%, depending on the degree to which exhaust heat is recovered.

4) Steam turbines are the engines least affected by constituents in the fuel gas because they do not come in direct contact with it; only the steam raised by fuel combustion operates the engines. The use of digester gas to produce steam is well-documented but the cost of generating power with steam turbines may be difficult to justify at facilities with less than 1 MW (1000 KW) potential.

3.3.4.5 Generators

The choice of a generator is basically a matter of matching the output of the generator (power output and shaft speed) with that of the prime mover. Depending on the type of prime mover (turbine, spark ignition, or compression engine), the gearbox joining the prime mover to the generator will usually increase the engine speed to that of the generator, or decrease the turbine speed to match that of the generator. In most cases, manufacturers match the prime movers to the generator set, or can recommend a distributor who does. Generators are packaged with necessary electrical controls for their operation.

Generators may be synchronous or induction types. Synchronous generators are by far the most common. However, in smaller sizes (below 5 or 10 MW) induction units are generally less expensive than synchronous units. They are also easier to maintain since they require no governor or synchronizing equipment. Induction generators have the disadvantage of being unable to operate unless parallelled with synchronous generation, either utility or in-plant. An induction generator by itself cannot be used to provide emergency power.

In addition to a generator, the system will include electrical equipment, either for interface with the utility grid or delivery of power on-site. Switchgear, wiring, and controls which protect the unit from under/over voltage

conditions, and automatic circuit breakers with manual reset to separate the system from the distributor line in case of distributor line power loss are also necessary equipment.

3.3.5 Other Design Considerations

Some of the factors a designer must consider when conducting a heat recovery analysis include:

- Determining the energy value of the digester gas.
- Calculating the heat balance around the engine/generator/boiler.
- If an engine is used, determine whether sufficient heat can be recovered from the jacket cooling water to satisfy digester heating requirements.
- Determining the efficiency of the energy recovery system.
- For boiler systems, determine steam and condensate flows, determine work produced in both process steam cycles and turbine operation.
- The full range of conditions expected at the plant must be evaluated, not just average conditions. Energy supply and energy demand schedules must be established. Heat recovery equipment must be sized to handle peak demands. Storage requirements for primary and backup fuels must be determined.
- A source of backup energy must be available in the event that plant energy recovery systems experience partial or total failure.
- The physical and chemical nature of flue gases generated must be considered (for example, temperature, corrosiveness, particulate concentration, and moisture content).
- The equipment must be designed to withstand the conditions to which it will be subjected. Appropriate construction materials must be used.
- Any solid, liquid or gaseous residue from the heat recovery operation must be collected and disposed of in a safe and environmentally sound manner.
- Chemical and physical treatments for makeup and circulating water or steam must be established.
- Manpower to operate the heat recovery system must be determined. Specialists may be required for certain equipment, for example, stationary engineers for high pressure boilers and engine specialists for internal combustion engines.
- Control strategies must be decided upon; instrumentation to carry

them out must be provided.

- Economic analysis must be performed to determine if the system can be economically justified. As a rule-of-thumb, the larger the plant, the more sophisticated the heat recovery system which can be justified.

3.4 ENVIRONMENTAL IMPACTS

The likely environmental impacts of each proposed project alternative should be evaluated. Since environmental impacts are important for political, economic, health and aesthetic reasons, a formal study of them is a necessary part of good project planning.

The primary function of a sewage treatment plant is to mitigate the adverse environmental effects of abundant raw sewage. The particular contributions of anaerobic digestion to this goal include sludge stabilization and pathogen neutralization. A discussion of pathogenic organisms follows.

3.4.1 Pathogenic Organisms

A pathogen or pathogenic agent is any biological species that can cause disease in the host organism. These organisms or agents fall into four broad categories: viruses, bacteria, parasites, and fungi. Within the parasite category, there are protozoa, nematodes, and helminths. Viruses, bacteria, and parasites are primary pathogens that are present at some level in sludge as a sludge as a result of human activity upstream from the wastewater treatment plant. Fungi are secondary pathogens and are only numerous in sludge when given the opportunity to grow during some treatment or storage process.

Pathogen Sources

Pathogens enter wastewater treatment systems from a number of sources:

- Human wastes, including feces, urine, and oral and nasal discharges;
- Food wastes from homes and commercial establishments;
- Industrial wastes from food processing, particularly meat packing plants;
- Animal feces and urine; and
- Biological laboratory wastes such as those from hospitals.

In addition, where combined sewer systems are used, ground surface and street runoff materials, especially animal wastes, may enter the sewers as

storm flow. Desease vectors such as rats that inhabit some sewer systems may also add a substantial number of pathogens.

3.4.2 Pathogen Characteristics

Viruses, bacteria, parasites, and fungi differ in size, physical composition, reproductive requirements, occurrence in the population, and prevalence in wastewater.

3.4.2.1 Viruses

Viruses can only reproduce by dominating the internal processes of host cells and using the host's resources to produce more viruses. Viruses are very small particles whose protein surface charge changes in magnitude and sign with pH. In the natural pH range of wastewater and sludges, most viruses have a negative surface charge. Thus, they will adsorb to a variety of material under appropriate chemical conditions. Different viruses show varying resistance to environmental factors such as heat and moisture. Enteric viruses are acid-resistant and many show tolerance to temperatures as high as 60°C.

Many of the viruses that cause disease in man enter the sewers with feces or other discharges and have been identified, or are suspected of being, in sludge. The major virus subtypes transmitted in feces are listed in Exhibit 3.23 together with the disease they cause. Viruses are excreted by man in numbers several orders of magnitude lower than bacteria. Typical total virus concentrations in untreated wastewaters are 1,000 to 10,000 plaque-forming units (PFU) per 100 ml; effluent concentrations are 10 to 300 PFU per 100 ml. Wastewater treatment, particularly chemical coagulation or biological processes followed by sedimentaiton, concentrates viruses in sludge. Raw primary and waste-activated sludges contain 10,000 to 100,000 PFU per 100 ml.

EXHIBIT 3.23

PATHOGENIC HUMAN VIRUSES POTENTIALLY IN WASTEWATER SLUDGE

Name	Disease
Adenoviruses	Adenovirus infection
Coxsackie virus, Group A	Coxsackie infection; viral meningitis; AFRI[a], hand, foot, and mouth disease
Coxsackie virus, Group B	Coxsackie infection, viral meningitis; viral carditis, endemic pleurodynia, AFRI[a]
ECHO virus, (30 types)	ECHO virus infection; aseptic meningitis; AFRI[a]
Poliovirus (3 types)	Poliomyelitis
Reoviruses	Reovirus infection
Hepatitis virus A and B	Viral hepatitis
Norwalk agent	Sporadic viral gastroenteritis
Rotavirus	Winter vimiting disease

[a]AFRI is acute febrile respiratory illness. Source: EPA, 1979

3.4.2.2 Bacteria

Bacteria are single-celled organisms that range in size from slightly less than one micron in diameter to 5 microns wide by 15 microns long. Among the primary pathogens, only bacteria are able to reproduce outside the host organism. They can grow and reproduce under a variety of environmental conditions. Low temperatures cause dormancy, often for long periods. High temperatures are more effective for inactivation, although some species form heat-resistant spores. Pathogenic bacterial species are heterotrophic and generally grow best at a pH between 6.5 and 7.5. The ability of bacteria to reproduce

outside a host is an important factor. Although sludge may be disinfected, it can be reinoculated and recontaminated.

Bacteria are numerous in the human digestive tract; man excretes up to 10^{13} coliform and 10^{16} other bacteria in his feces every day. The most important of the pathogenic bacteria are listed in Exhibit 3.24, together with the diseases they cause.

EXHIBIT 3.24

PATHOGENIC HUMAN BACTERIA POTENTIALLY IN WASTEWATER SLUDGE

Species	Disease
Ariozona hinshawii	Arizona infection
Bacillus cereus	B. cereus gastroenteritis; food poisoning
Vibrio cholerae	Cholera
Clostridium perfringens	C. perfringens gastroenteritis; food poisoning
Clostridium tetani	Tetanus
Escherichia coli	Enteropathogenic E. coli infection; acute diarrhea
Leptospira sp	Leptospirosis; Swineherd's disease
Mycobacterium tuberculosis	Tuberculosis
Salmonella paratyphi, A, B, C	Paratyphoid fever
Salmonella sendai	Paratyphoid fever
Salmonella sp (over 1,500 serotypes)	Salmonellosis; acute diarrhea
Salmonella typhi	Typhoid fever
Shingella sp	Shigellosis; bacillary dysentery; scute diarrhea
Yersinia enterocolitica	Yersinia gastroenteritis
Yersinia pseudotuberculosis	mesenteric lymphadenopathy

Source: EPA, 1979

3.4.2.3 Parasites

Parasites include protozoa, nematodes, and helminths. Pathogenic protozoa are single-celled animals that range in size from 8 to 25 microns Protozoa are transmitted by cysts, the nonactive and environmentally insensitive form of the organism. Their life cycles require that a cyst be ingested by man or another hosc. The cyst is transformed into an active organism in the

intestines, where it matures and reproduces, releasing cysts in the feces. Pathogenic protozoa are listed in Exhibit 3.25, together with the diseases they cause.

Nematodes are roundworms and hookworms that may reach sizes up to 36 cm in the human intestines. The more common roundworms found in man and the diseases they cause are listed in Exhibit 3.25. They may invade tissues other than the intestine. This situation is especially common when man ingests the ova of a roundworm common to another species such as the dog. The nematode does not stay in the intestine but migrates to other body tissue such as the eye and encysts. The cyst, similar to that formed by protozoa, causes inflammation and fibrosis in the host tissue. Pathogenic nematodes cannot spread directly from man to man. The ova discharged in feces must first embryonate at ambient temperature, usually in the soil, for at least two weeks.

EXHIBIT 3.25

PATHOGENIC HUMAN AND ANIMAL PARASITES
POTENTIALLY IN WASTEWATER SLUDGE

Species	Disease
A. Protozoa	
Acanthamoeba sp	Amoebic meningoencephalitis
Balantidium coli	Balantidiasis, Balantidial dysentery
Dientamoeba fragilis	Dientamoeba infection
Entamoeba histolytica	Amoebiasis; amoebic dysentery
Giardia lamblia	Giardiasis
Isospora bella	Coccidiosis
Naegleria fowleri	Amoebic meningoencephalitis
Toxoplasma gordii	Toxoplasmosis
B. Nematodes	
Ancyclostoma dirodenale	Ancylostomiasis; hookworm disease
Ancyclostoma sp	Cutaneous larva migrans
Ascaris lumbricoides	Ascariasis; roundworm disease; Ascaris pneumonia
Enterobius vermicularis	Oxyuriasis; pinworm disease
Fasciola spp.	Fascioliasis
Filaroma	Rift Valley Fever, Filariasis
Necator americanus	Necatoriasis; hookworm disease
Schistosoma m,h	Schistosomiasis
Strongyloides stercoralis	Strongyloidiasis; hookworm disease

Toxocara canis	Dog roundworm disease, visceral larva
Trichusis trichiura	Trichuriasis; whipworm disease
C. Helminths	
Diphyllobothrium latum	Fish tapeworm disease
Echinococcus granulosis	Hydatid disease
Echinococcus multilocularis	Aleveolar hydatid disease
Hymenolepis diminuta	Rat tapeworm disease
Tymenolepis nana	Dwarf tapeworm disease
Taenia saginata	Taeniasis; beef tapeworm disease
Taenia solium	cysticercosis; pork tapeworm disease

Source: EPA, 1979

Helminths are flatworms, such as tapeworms, that may be more 30 cm in length. The most common types are associated with beef and rats. Transmission occurs when man ingests raw or inadequately cooked meat or the eggs of the tapeworm. In the less serious form, the tapeworm develops in the intestine, maturing and releasing eggs. In the more serious form, it localizes in the ear, eye, heart, or central nervous system.

3.4.2.4 Fungi

Fungi are single-celled non-photosynthesizing plants that reproduce by developing spores, which form new colonies when released. Spores range in size from 10 to 100 microns. They are secondary pathogens in wastewater sludge, and large numbers have been found growing in compost. The pathogenic fungi, listed in Exhibit 3.26, are most dangerous when the spores are inhaled by people whose systems are already stressed by a disease such as diabetes, or by immunosuppressive drugs. Fungi spores are ubiquitous in the environment and have been found in pasture lands, hay stacks, manure piles, and the basements of most homes.

EXHIBIT 3.26

PATHOGENIC FUNGI POTENITALLY IN WASTEWATER SLUDGE

Species	
Actinomyces sp	Actinomycosis
Aspergillus sp	Aspergillosis; Aspergillus pneumonia otomycosis
Gandida albicans	Monilliasis; candidiasis oral thrush

Source: EPA, 1979

3.4.3 Pathogen Reduction During Digestion

Sludge digestion is one of the major methods for sludge stabilization in the United States. Well-operated digesters can substantially reduce virus and bacteria levels but are less effective against parasitic cysts.

3.4.3.1 Viruses

Viruses are removed most readily in wastewater treatment processes when attached to larger particles such as chemical or biological flocs. Primary treatment virus removal is from three percent to extensive; primary treatment removals of 60 to 95 percent occur with a one-hour detention time, 70 to 99 percent removals occur with activated sludge.

Virus concentration ranges for raw and anaerobically digested sludges are given in Exhibit 3.27. Anaerobic digestion has been shown to reduce the concentration of detectable viruses by one to several orders of magnitude. Digester detention time, operating temperature, and meth d of operation are apparently the most important factors affecting virus removal. Almost 50 percent virus inactivation occurs with sludge storage at 20°C for two weeks under laboratory conditions. Reduction continues with longer storage. Increased operating temperature also improves reduction.

EXHIBIT 3.27

PATHOGEN OCCURRENCE IN
LIQUID WASTEWATER SLUDGES

Pathogen	Name or species	Concentration, number/100 ml: Unstabilized raw sludge[a]	Concentration, number/100 ml: Digested sluge[a,b]
Virus	Various	$2.5 \times 10^3 - 7 \times 10^4$	$100 - 10^3$
Bacteria	Clostridia sp	6×10^6	2×10^7
Bacteria	Fecal coliform	10^9	$3 \times 10^4 - 6 \times 10^6$
Bacteria	Salmonella sp.	8×10^3	BDL[c] - 62
Bacteria	Streptococcus faecalis	3×10^7	$4 \times 10^4 - 2 \times 10^6$
Bacteria	Total coliforms	5×10^9	$6 \times 10^4 - 7 \times 10^7$
Bacteria	Mycobacterium tuberculosis	10^7	10^6
Parasites	Ascaris lumbricoides	200 - 1,000	0 - 1,000
Parasites	Helminth eggs	200 - 700	30 - 700

[a] Type of sludge usually unspecified.
[b] Anaerobic digestion; temperature and detention times varied.
[c] BDL is below detection limits, <3/100 ml.

Source: EPA, 1979

3.4.3.2 Bacteria

Most bacteria in wastewater are readily sampled and measured. Commonly found concentrations and types of bacteria are shown in Exhibit 3.27. Increasing both the temperature and the detention time increases bacterial inactivation. Fill-and-draw operation, however, prevents digestion from removing as large a fraction of the bacteria as it might in another operation mode.

3.4.3.3 Parasites

Protozoa cysts should not survive anaerobic digestion, but helminth ova definitely do and should be expected in digested wastewater sludge unless testing proves the contrary.

3.4.4 Pathogen Survival in the Soil

An objective of reducing the number of pathogens in wastewater treatment plant sludge is to produce a product that may be beneficially utilized. As such, the behavior of sludge pathogens in the soil is important. Sludge is returned to the soil by spray irrigation, surface flooding, wet or dry surface spreading, or subsurface injection. These techniques expose the sludge to the sun, air, water, and soil in different ways that may strongly affect pathogen survival.

3.4.4.1 Viruses

Data for the survival of viruses, bacteria, and parasites in soil are summarized in Exhibit 3.28. Factors that have been found to affect survival include soil temperature, pH, clay concentration, cation exchange capacity, specific surface area, and organic content. Viruses survive best at slightly alkaline pH levels. Cooler temperatures prolong virus infectiveness, as does a moisture content between 15 and 25 percent.

3.4.4.2 Bacteria

Maximum recorded bacterial survival times vary with species, from a little over one month to almost a year, as shown in Exhibit 3.28. The important variables in bacteria survival are moisture content, moisture holding capacity, temperature, pH, sunlight, organic matter, and competition or predation. Moisture content is most important, since desiccation often leads to cellular death. Lower temperatures prolong survival, and a lower pH increases the rate of inactivation. The presence of organics may promote survival or even regrowth.

If sludge is applied by a surface method and allowed to dry before incorporation into the soil, considerable bacterial reduction can be achieved. This potential advantage of surface applications must be weighed against the associated odor risk and the cost of subsurface injection.

EXHIBIT 3.28

PATHOGEN SURVIVAL IN SOILS

Pathogen type	Name or species	Length of survival, days
Virus	Poliovirus	Up to 84
Virus	Poliovirus 1	Up to 170
Virus	ECHO 7	Up to 170
Virus	ECHO 9	Up to 170
Virus	Coxsackie B3	Up to 170
Bacteria	Clostridium sp	Up to 210
Bacteria	Leptospira sp	Up to 43
Bacteria	Mycobacteriaum tuberulosis	More than 180
Bacteria	Salmonella sp.	Up to 570
Bacteria	Salmonella typhi	Up to 120
Bacteria	Shigella sp.	Up to 210
Bacteria	Streptococcus faecalis	Up to 210
Bacteria	Total coliform	Up to 210
Parasite	Entamoeba histolytica	Up to 8
Parasite	Ascaris lumbricoides	Up to 2,550
Parasite	Hookworm larvae	Up to 42
Parasite	Schistosoma	Up to 21

Source: EPA, 1979

3.4.4.3 Parasites

Protozoa cysts are reported to be destroyed in eight days after land application. Helminth ova, however, are very durable and may survive up to seven years. Hookworm larvae may be viable for over a month.

3.4.5 Potential Human Exposure to Pathogens

Man may be exposed to pathogens in wastewater sludge in a variety of ways and at greatly varying concentrations. Exhibit 3.29 lays out in simplified form some of the potential pathways. There is no firm scientific evidence that human disease is directly linked to exposure to pathogens from wastewater sludge. Viable pathogens have, however, been isolated from intermediate points in the sludge management system, such as from surface runoff from sludge treated fields. These factors should be considered in the selection and design of a process for

reducing the number of pathogenic organisms.

3.4.6 Other Environmental Impacts

Land application of anaerobically stabilized sewage sludge has other environmental impacts. Its primary adverse impacts aside from pathogen transmission are odor and the potential for toxin or heavy metal contamination. The beneficial impacts include soil fertilization and stabilization of sandy or eroded soils.

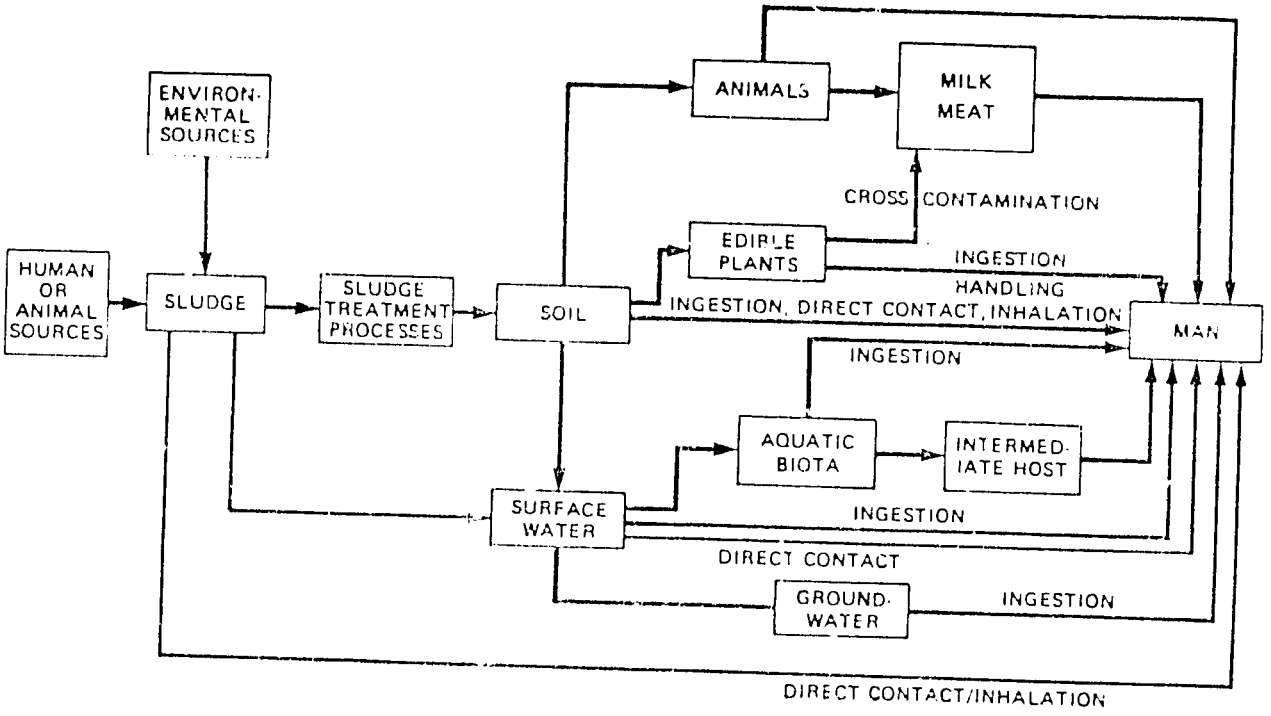

EXHIBIT 3.29

POTENTIAL PATHOGEN PATHWAYS TO MAN

Source: EPA, 1979

3.5 SPECIAL CONSIDERATIONS IN THE EGYPTIAN ENVIRONMENT CONTEXT

Much of Egypt's primary infrastructure is not yet adequate to meet the population's needs. Cairo's West Bank, for example, is only one-third sewered; the remaining two-thirds of the city is served by septage tanks. Private carriers track raw sewage from the individual buildings' septage tanks to the nearest canal (carrying Nile River water to the farms) or drain (returning water to the Nile) for dumping. Piped sewage goes to one of several wastewater treatment plants and undergoes primary treatment (screening and sedimentation) prior to discharge. The effluent presently does not undergo secondary treatment or disinfection. The sludges that are generated are simply applied to land for drying. Many urban areas in Egypt need complete and adequately sized sewage collection networks in addition to sewage treatment plants. Much of the primary sludge that is generated is used by farmers, and they can be expected to continue this beneficial use of sludge as its quantities grow along with Egypt's infrastructure improvements. A good public health argument exists for anaerobically stabilizing this sludge prior to use; not only will it be less putrescent and easier to handle, but pathogen levels will be greatly reduced. Energy recovery is an added benefit that makes the digestion process more economic.

Investments in anaerobic digesters will not be made obsolete by the introduction of secondary and/or tertiary sewage treatment processes. Sludge will continue to be generated and the need to stablize it will continue to exist.

Prior to claiming substantial public health benefits for sludge digestion, a detailed analysis of actual Egyptian pathogen destruction by the process is warranted. Anaerobic digestion may not neutralize some of Egypt's most persistent parasites.

One of the best uses of digester-produced methane may be to make sewage treatment plants energy self-sufficient. By utilizing the gas to produce

mechanical, electrical, and thermal energy, treatment plants may be built in new cities and in other locations not well served by the electric grid.

3.6 CURRENT R&D THRUSTS

3.6.1 Industry R&D

Sewage treatment plant design and construction is a mature industry in the United States. Anaerobic digeters have been used to stabilize sludges for nearly 100 years, and a great deal of research, process refinement, and experimentation with alternative designs has been completed. Research and development activities within the industry continue at several levels. At the systems level, there is constant experimentation with new process combinations, as engineers attempt to optimize designs based on both quality and cost-effectiveness criteria. At the process level, development of better digesters continues; for example, phase separation using separate tanks for acid formation and methane production is being tried, and the application of computers with detailed instrumentation is being introduced to allow instantaneous monitoring and control of system performance.

3.6.2 U.S. Government R&D

In the United States, the federal government during the past decade has initiated numerous programs to foster the development of biomass energy. The main emphasis of Federal biomass R&D is in applied research and engineering, which includes activities related to developing feedstock production and conversion technologies from the conceptual stage through establishing technical feasibility. The programs involved in R&D exhibit a broad range of interests concentrating on five feedstock production categories (woody, herbaceous, aquatic, waste-derived, and environmental) and five conversion technology categories (direct combustion, biochemical, thermochemical, photobiological, and environmental).

Research on sewage gas energy recovery is coordinated by the Municipal Waste Division of the U.S. Department of Energy. Their mission is to conduct research that will allow the private sector to complete the development necessary

for the commercial application of these technologies in the marketplace.

The wastewater treatment research is conducted as part of the Biochemical Research Program. Recent projects have included the development of improved microbial strains for anaerobic digestion of wastewater, biofilm process research for treatment of wastewater and effluent dewatering and drying process research.

The first project mentioned is the development of improved microbial strains for anaerobic digestion of MSW and wastewater. The objective of this research is to explore and use known genetic-manipulation techniques in order to select, and develop improved microbial strains capable of fermenting MSW- and wastewater-feedstock in anaerobic digesters.

It is known that methane production from cellulosic and starchy materials (as well as other materials which are constituents of MSW and wastewater) follows three distinctive steps, that is cellulolysis - starch hydrolysis, acetogenesis, and methanogenesis. The three steps (mechanisms) are accomplished by three corresponding groups of microbes. It has been demonstrated that cellulolysis and starch hydrolysis produce higher amounts of simple sugars and faster by the aid of improved bacterial and/or fungal strains than with the usual ones (wild, etc. types). In the area of acetogenic bacterial improvement, and in particular, in the area of methanogenic bacterial improvement, research is in its infancy. Therefore, the employment of known genetic techniques (like conjugation, transformation, transduction, and mutation) to improve the genotype of the bacteria involved in methanogenesis (towards a higher rate of methane production than the usual one) is needed. A 10% increase of methane yields by improved bacterial strains will have an appreciable effect on the economic and energy requirements of methane production through anaerobic digestion of MSW and wastewater.

The development of a biofilm process for treatment of wastewater is

also underway. The objective of this study will be the production of basic data for the development of a highly effective biofilm process for treating wastewater to produce methane gas.

Several systems are currently used to treat wastewater, among them the anaerobic film process appears to be of high interest due to recent increasing concern in energy matters. The wastewater stream, by its available nutrients and biological oxygen demand, determines the microflora population dynamics and chemical activities. It is possible to change both the nature and dynamics of the microbial population towards a highly methane-producing microflora through biofilm processes. These processes involve reactors that immobilize the bacteria (retained-biomass reactors) that have the property to attach on solid surfaces of special materials, especially methanogenic bacteria. These materials provide a vast surface area for biological growth, supporting the development of a high biomass concentration. Such biosupport materials, known as biofilms, can be made of plastics. These types of reactors provide long retention times without the need for solids recycling, are less susceptible to microflora washout with the effluent, permit short hydraulic residence times, are suitable for soluble microbial food sources, provide a high degree of digestion (treatment) with dilute waste streams, produce high methane content of the gas (up to 70%, probably from the absorption and removal of most of carbon dioxide in the effluent), can operate at higher temperatures than other systems, and can handle moderate overloading effects.

3.6.3 Other R&D

Both the Europeans and the Japanese continue to work on process improvements relating to digester performance. Innovative tank shapes and piping systems designed to improve digestion ratio and reduce maintenance downtime are among the things being explored.

4.0 METHANE FROM MANURE

Agricultural wastes including animal manure can be anaerobically digested to produce methane gas in a manner similar to that used for stabilizing sewage sludge. Both the gas and the stabilized solid effluent are valuable products that can be productively utilized in agricultural processes. This chapter will focus on the larger scale applications for anaerobic digestion of agricultural wastes, including dairy farms, beef feedlots and poultry farms. Small-scale individual family digesters will not be covered because an extensive body of documented experience with smaller installations already exists in Egypt.

4.1 PROCESS DESCRIPTION/OVERVIEW

As has been described in Chapter 3, methane-based biogas is a by-product of anaerobic digestion, the decomposition of organic wastes by bacteria in an oxygen-free environment. The process does not completely stabilize municipal and farm wastes, but it can break down much of the degradable material which is a nuisance or health hazard. Other stabilization methods do not offer the advantage of producing both fuel and a material which can be used as an animal feed, soil conditioner, or livestock bedding.

We recall from Chapter 3 that three major factors contributing to digester balance for maximum methane production are a pH, temperature, and composition of wastes.

Bacterial populations of digesters need carbon, nitrogen, and other nutrients to grow, multiply and thereby produce gas. A shortage of any basic nutrient can inhibit microbial activity.

The amount and spatial distribution of volatile solids (materials which can be decomposed by the bacteria) in the sludge also affects gas production. This volatile fraction is generally reduced by: 1) water and, 2) the presence of inert solids such as soil, clay, calcium carbonate and salts. Not all the

106

stubborn solids are inorganic. Lignin, a structural organic material in wood, is particularly difficult to break down. Skimming, thickening, continuous loading, and mixing enhance digestion by increasing the fraction and uniform distribution of volatile solids.

Substances toxic to bacteria are sometimes present in sludge. Materials such as heavy metals, antibiotics, phenols, pesticides, detergents, sulfur compounds, and disinfectants are common inhibitors of anaerobic digestion. The source of the wastes is often a good predictor of the toxic constituents. Some of these substances can be diluted to non-toxic concentrations, some can be precipitated out of the sludge, and still others must be removed from wastes before they enter digesters.

4.2 TECHNOLOGY DESCRIPTION

There is much current experimentation and debate over how to optimize digestion. Therefore, the equipment available to accomplish anaerobic digestion ranges widely in size, design and operation. Equipment used to transform the raw feedstock into a digested product must allow for feeding into the digester, heating the manure and maintaining its temperature, holding the material during digestion, keep oxygen out of the digester, mixing the digester contents, accumulating and releasing biogas and discharging digested material.

Several types of digesters, discussed in the previous chapter, perform all of the above functions satisfactorily. Most manure digesters are variations of the two principal designs described here.

A complete-mix high-rate digester is, by definition, a design which incorporates stirring or agitation of the contents to achieve good mixing and which also has a means of heating to ensure that digestion takes place at a stable optimum temperature. These digesters were first developed for the wastewater disposal field, but there are now many alternative types available,

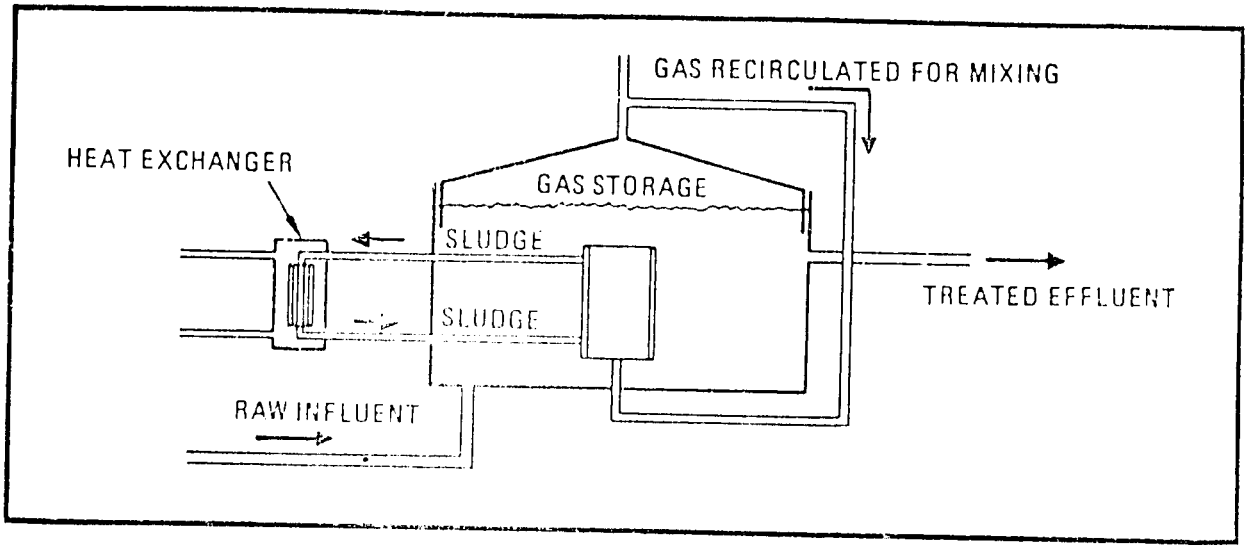

Exhibit 4.1 Traditional Complete-Mix Digester Source: TVA (1981)

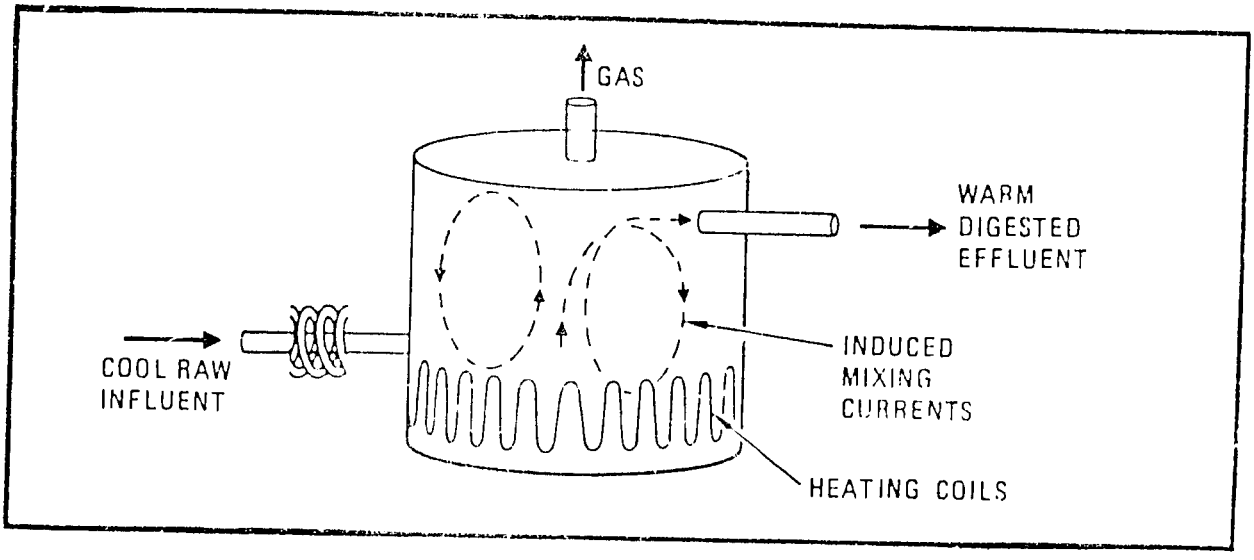

Exhibit 4.2 Simple Complete-Mix Digester Source: TVA (1981)

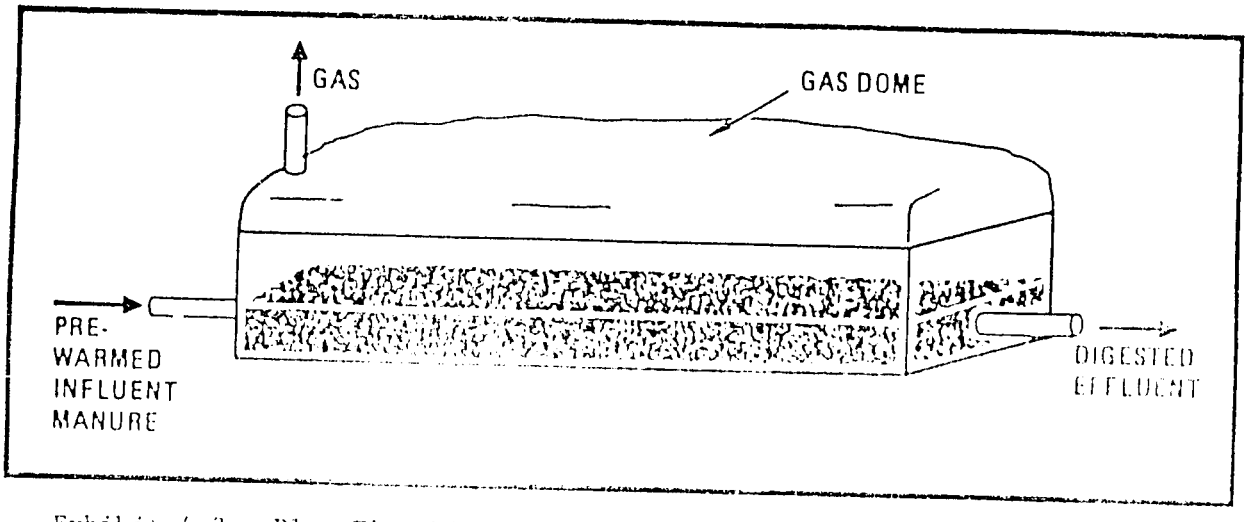

Exhibit 4.3 Plug-Flow Digester Source: TVA (1981)

and it is generally recognized that, for maximum efficiency coupled with short retention periods, the high-rate concept is probably essential. A typical high-rate digester with mixing by gas circulation and sludge heating by external heat exchanger is illustrated in Exhibit 4.1. These digesters are essentially round concrete tanks with dome roofs of concrete or steel.

When the material being digested is fairly homogenous (as may be the case in farm settings), vigorous mixing may not be required for thorough digestion. By locating the intake and outlet ports strategically, and applying heat at the bottom of the digester, sufficient thermal currents may be induced to effectively mix the digester's contents. A flow schematic of an effectively mixed but not agitated digester appears in Exhibit 4.2. Even though the apparatus in Exhibit 4.2 is much simpler than that in Exhibit 4.1, the essential digestion reaction taking place inside is the same.

The second arrangement which as been used successfully to digest uniform sludges in farm settings is plug-flow or canal digester. Although not a pure plug-flow in the hydraulic sense (totally without longitudinal mixing), manure is fed into a long trough at one end removed from the other, undergoing very little mixing in between. A schematic of a digestion trough appears in Exhibit 4.3. This type of digester might typically be built as a long, concrete-lined excavated trough with an impermeable "balloon" cover. Under the cover, a layer of material such as styrofoam can serve to insulate the sludge and inhibit the formation of scum on its surface. Other construction possibilities include horizontal metal tanks or plastic-lined canals. In the canal-type digester, the sludge must be warmed before entering the chamber in order to prevent thermal stratification with the cold sludge flowing undigested along the bottom of the tank.

A decision between these two leading digester types should be based on several factors, which are summarized in Exhibit 4.4. There is divided opinion

EXHIBIT 4.4

Comparison of Complete-Mix and Plug-Flow Digesters

	Advantages	Disadvantages
Complete-Mix Digester	Little land required. Maximum gas production. Short retention time (15-20 days). Slow solids buildup (5 yr cleanout interval).	High capital cost. Energy required for mixing. Difficult to clean.
Canal Plug-Flow Digester	Lower capital cost. No mixing required. Cleanable with bulldozer or other means.	Large land requirements. Less gas production. Long retention time. Rapid solids buildup (2 yr cleanout interval).

Source: TVA, 1981

EXHIBIT 4.5

Suitability of Various Feedstocks for Anaerobic Digestion

Feedstock	Availability	Suitability for digestion	Special problems
ANIMAL WASTES			
Dairy	Small- to medium-sized farms, 30-150 head	Excellent	No major problems, some systems operating.
Beef cattle	Feedlots, up to 1,000-100,000 cattle	Excellent	Rocks and grit in the feed require degriting, some systems operating.
Chicken	10,000-1,000,000 per farm	Excellent	Degritting necessary, broiler operations need special design due to aged manure, tendency to sour.
Turkey	30,000-500,000 per farm	Excellent	Bedding can be a problem, manure is generally aged, no commercial systems operating.
CROP RESIDUES			
Wheat straw	Same cropland	Poor, better suited to direct combustion	Particle size reduction necessary, low digestibility, no commercial systems.
Corn stover	Same cropland	Poor, better suited to direct combustion	No commercial systems, no data available, particle size reduction necessary.
AQUATIC PLANTS			
Water hyacinth	Southern climates, very high reproduction rates	Very good	No commercial operations, needs pre-grinding.
Algae	Warm or controlled climates	Good	Longer reaction time than for animal wastes.

Based on: Tom Abeles and David Ellsworth, "Biological Production of Gas," contractor report to OTA by I.E. Associates, Inc., Minneapolis, Minn., 1979.

EXHIBIT 4.6 MANURE PRODUCTION

Animal	Per 500 Kg of live animal			Weight of Typical Animal (Kg)
	Volume (m^3)	Wet Weight (Kg)	Daily Gas Production (m^3)	
Dairy Cattle	0.038	38.5	1.02	600
Beef Cattle	0.038	41.7	0.87	400
Poultry	0.028	31.3	2.32	2

Based on TVA (1981) and NAS (1977)

as to which of these two digesters types is better able to withstand operating upsets from overloading, excess acidity, and toxic exposure.

4.3 SYSTEM DESIGN CONSIDERATION

4.3.1 Resource Inventory

Each agricultural enterprise will have a different combination of resources available for feeding an anaerobic digester. This section examines three types of enterprise: dairy farms, beef feedlots and poultry farms.

A wide range of plant and animal matter can be anaerobically digested. Both the gas yields and rates of digestion vary. Generally materials that are higher in lignin (e.g., wood and crop residues) are poor feedstocks because the lignin protects the cellulose from bacterial attack. Pretreatment could increase their susceptibility to digestion. However, even then digestion energy efficiencies generally do not exceed 50 to 75 percent. Thus, more usable energy can be obtained through combustion or thermal gasification of these feedstocks.

The best feedstocks for anaerobic digestion usually are wet biomass such as fresh animal manure, various aquatic plants, and wet food processing wastes such as those that occur in the cheese, potato, tomato, and fruit-processing industries. See Exhibit 4.5 for a summary of the suitability of various feedstocks for digestion. Exhibit 4.6 details manure and biogas production potential for dairy cattle, beef cattle and poultry.

4.3.2 Component Selection

Chapter Three's descriptions of the various components of an anaerobic digestion system are applicable for the cases of both manure and sewage sludge. Manure systems are often smaller in scale and simpler than sewage sludge systems. The components that must be specified include digester feed systems, digester tanks, heaters, mixers, covers, piping and cleaning mechanisms.

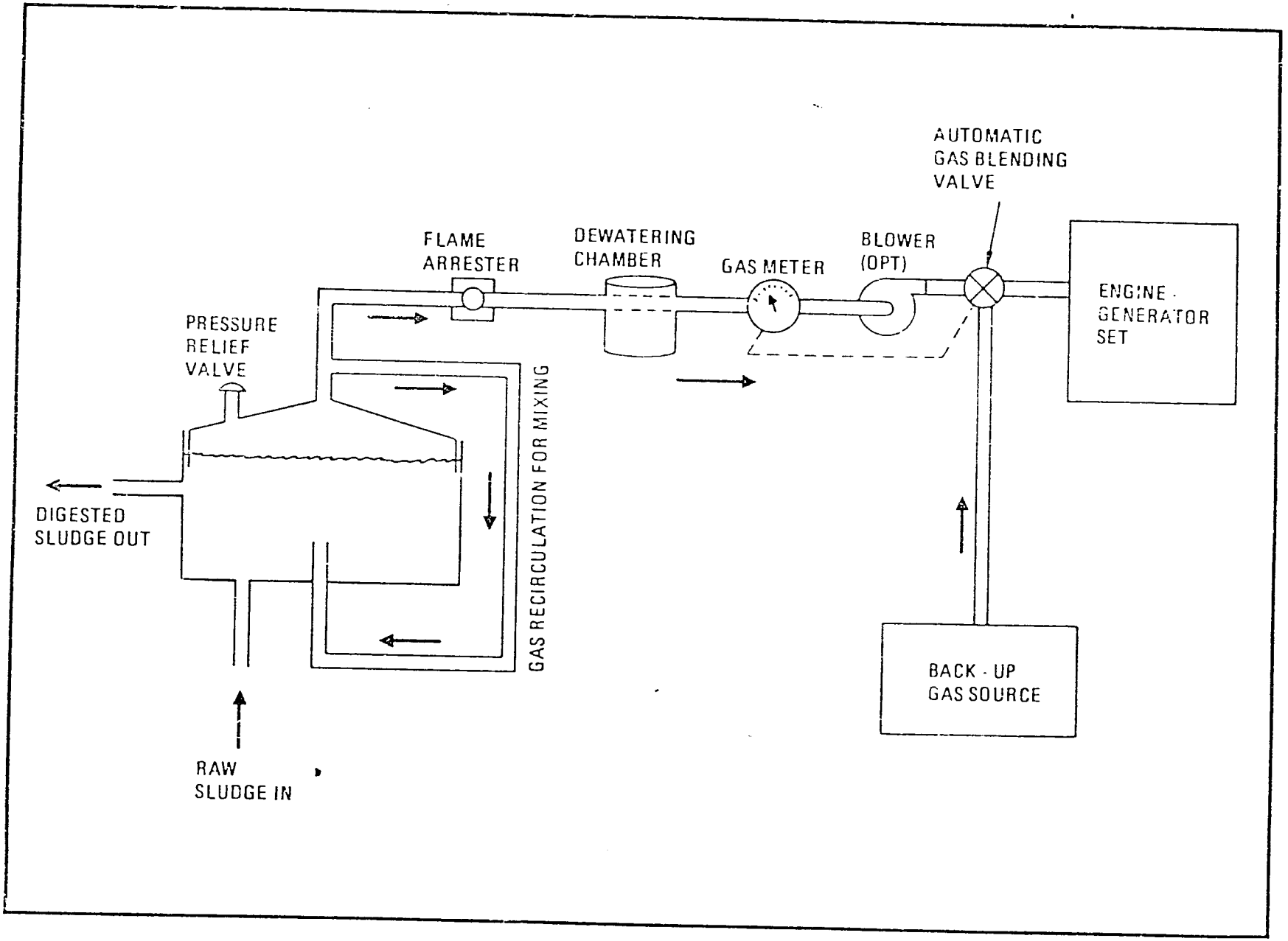

Exhibit 4.7 Biogas System Plumbing

Source: TVA (1981)

Manure-fed systems differ from sewage-fed systems in their pre-processing requirements. The manure feedstock must be substantially diluted prior to introduction into the digester, whereas sewage sludge feedstock must be thickened. Both system types need a pre-processing reservoir in order to function optimally.

The biogas formed during anaerobic digestion will naturally collect in the top of the tank. Most commonly used digesters allow some space for gas storage within the digester. Since both gas production and gas consumption rates fluctuate, it is necessary for a good design to provide some flexibility in the gas space volume by using either a floating digester cover or an inflatable bladder-type cover. Since the gas stored will be at a very low pressure, only a small amount of gas (possibly a few hours' equivalent in engine operation) can be contained.

If additional gas storage is required, a separate high-pressure vessel will be needed, along with a gas compressor. Pressurized tanks are available as horizontal cylinders for small installations and large spheres for bigger plants. Even these high-pressure vessels will typically storage store only a few days' gas supply, eliminating the potential for long-term storage. Assuming that some source of backup energy is available to the site, it may be difficult to justify the expense and safety requirements of high pressure gas storage for biogas cogeneration. See Exhibit 4.7.

The piping through which biogas exits the digester may be of any standard piping material (even PVC pipe), but brass or copper fittings must be avoided because of their tendency to react with the hydrogen sulfide in the gas. Low-carbon steel is suitable for the piping. The gas exit must be situated at the highest point in the digester and equipped with a pressure-relief valve (in case the exit valve is blocked for some reason) and a flame arrester (to prevent a fire in the pipe from entering the digester). Also,

a simple draindown dewatering chamber may be desired, fed by gently sloping pipes. Because of the water content of the biogas, pipes must be protected from freezing where sub-freezing temperatures occur, and condensation drain points should be provided.

Normal operating pressure within the digester is usually about 1.7 kPa just enough pressure to move the gas slowly a few hundred yards, although it may reach 3.7 kPa safely. The addition of a low-pressure blower, or gas pump, may be needed to satisfy engine manufacturers' intake manifold pressure requirements.

Gas pumps can be sophisticated and relatively expensive items. The pump itself must be absolutely leak proof, for apart from the obvious explosive gas hazard, a gradual depletion of gas from the digester will disturb the normal operating pressure, and could well introduce air into the anaerobic environment and so cause digester failure. On large digesters, a small amount of gas leakage would obviously be insignificant, but on smaller units gas systems must be virtually leak proof. Unless inspection is vigilant and regular, leakage can go undetected until digester performance deteriorates noticeably.

4.3.3 Energy Applications

Despite the fact that biogas has only about one half of the heating value as natural gas, and may contain one or more contaminants as well, there are several factors that enhance the economic value of biogas as a fuel.

A quality that often makes biogas generation economically attractive is that generally this energy source "fits" on-site energy use in a number of ways:

1) The quantities of power and heat produced will often be of the same order of magnitude as required at the immediate site.

2) The installation can usually be made reasonably compact, with

116

gas production near areas of energy use. This feature will be especially significant at remote sites with high fuel delivery costs.

3) The technology used in biogas cogeneration is largely within the experience of a seasoned farm owner or sewage plant operator.

4) Allowing for short-term lags, the timing of gas production will coincide with fluctuations in energy demand. For instance, if sludge availabilty drops off (perhaps as a result of selling some livestock), both sludge pumping and sludge heating requirements will decline immediately, followed a short time later by reduced gas production and hence less energy availability.

Finally, within the reliability limits of the equipment and the diligence of the maintenance person, biogas production is under the sole control of the owner-operator. Fuel scarcity arising from national or international events is not a problem.

Biogas can be combusted for cooking, water heating, space conditioning, refrigeration or lighting (see Chapter 6). It can be used to fuel engines to produce mechanical power, or engine-generators to produce electricity (see Chapter 3). Co-generation, the simultaneous production of electricity and thermal energy, is also likely to be cost-effective in many cases. The highest priority use of the biogas should of course, be digester process heating. This normally consumes only a small fraction of the total gas generated.

4.4 ENVIRONMENTAL IMPACTS

Anaerobic digestion of feedlot manure can be considered to be an environmentally beneficial technology because it is an adaptation of a pollution control process. The energy product - biogas - is basically a byproduct of the control process, which converts the raw manure (which often represents a substantial disposal problem) into a more benign sludge waste. Where the manure was used as a fertilizer and soil amendment, the digestion wastes can subsitute

for the manure while eliminating some of its drawbacks.

The environmental benefits associated with reducing feedlot pollution are extremely important. The runoff from cattle feedlost is a source of high concentrations of bacteria, suspended and dissolved solids, and chemical and biological oxygen demand (COD/BOD). This type of runoff has been associated with: large and extensive fish kills because of oxygen depletion of receiving waters; high nitrogen concentrations in ground and surface waters, which can contribute to the aging of streams and to nitrate poisoning of infants and livestock; transmission of infectious disease organisms to man, livestock, and wildlife; and coloring of streams. Other problems associated with feedlots include attraction of flies and obnoxious odors.

Because anaerobic digestion is a relatively simple process not requiring extreme operating conditions or exotic controls, biogas facilities may be designed for very small (10 cow) operations as well as large feedlots. The environmental impacts will vary accordingly. For example, recycling of waste-water may be possible for the small on-farm digesters because of high water treatment costs. The product gas from the smaller units is likely to be used on-site and, depending on its use, may or may not be scrubbed of its H_2S and ammonia (NH_3) content; the product from very large units may be upgraded to pipeline quality by removing these pollutants as well as the 30 to 40 percent of the CO_2 fraction in the biogas.

The major problem associated with the digestion process is waste disposal and the associated water pollution impacts that could result. As noted above, anaerobic digestion is basically a waste treatment technology, but although it reduces the organic pollution content of manure it does not eliminate it. The combination of liquid and solid effluent from the digester contains organic solids, fairly high concentrations of inorganic salts, some concentrations of H_2S and NH_3, and variable amounts of potentially toxic metals such as boron,

copper, and iron. For feedlot operations where the manure is collected only intermittently, small concentrations pesticides used for fly control may be contained in the manure and passed through to the waste stream.

A variety of disposal options for the liquid and sludge wastes exist. Generally, wastes will be ponded to allow settling to occur. The liquid, which is high in organic content, can be pumped into tank trucks (or, for very large operations, piped directly to fields) to be used for irrigation and fertilization. The high salt content and the small concentrations of metals in the fluid make it necessary to rotate land used for this type of disposal. Large operations may conceivably treat the water and recycle it, but treatment cost may prove to be prohibitive. Other disposal methods include evaporation and discharge into water-ways. In all cases, infiltration of wastewater into the ground water system is possibility where soils are porous and unable to purify the effluent through natural processes. As with virtually all disposal problems of this nature, this is a design problem rather than a technological one; if necessary, ponds can be lined with clay or other substances for ground water protection.

The organic content of the effluent, which varies according to the efficiency of the digester, will represent a problem if allowed to enter surface waters that cannot dilute the effluent sufficiently. Similar problems can occur with organics leached from manure storage piles; this problem exists in more severe form in the original feedlot operation.

The sludge often has value either as a fertilizer or cattle feed. In numerous applications worldwide, the sludge is considered a substantial improvement over the previously used manure fertilizer. In areas where chemical fertilizers are not available or are too expensive, the retention of the manure's fertilizer value is a particularly critical benefit of the biogas process.

Although the H_2S (and related compounds) content of the effluent may present some odor problems, this problem, as well as that of the very small

pesticide content, should be negligible.

The gas produced by the digester will contain small (less than 1-percent each) concentrations of H_2S and NH_3. If the gas is burned onsite without scrubbing out these pollutants, combustion will oxidize these contaminants to sulfur and nitrogen oxides. Because the H_2S will form mostly sulfurous and sulfuric acids, which are extremely corrosive to metal, the biogas has limited use if it is not scrubbed. For example, scrubbing is a requirement if the gas is to be used in an internal combustion engine. Simple and inexpensive scrubbing methods are available, using an "iron sponge" of ferric oxide and wood shavings to react the gas with the iron to form ferric sulfide. However, even if the gas were not scrubbed, the pollutant concentrations caused by biogas combustion should be of little consequence to public health as long as the combustion did not take place in a confined area.

The major air pollution problem of anaerobic digestion, therefore, is not from combustion of the product gas, but from leaks of raw gas from the system. For a manure sulfur content of 0.2 percent and digester pH of 7.2, the raw biogas can contain H_2S in concentrations of nearly 2,000 parts per million (ppm). Although exposure to this full concentration seems extremely unlikely, concentrations of 500 ppm can lead to unconsciousness and death within 30 minutes to 1 hour, and concentrations of 100 ppm to respiratory problems of gradually increasing severity over the course of a few hours.

Because of rapid diffusion of the gas, health problems associated with H_2S exposures are likely to be confined to these occupantional exposures. However, venting of raw gas can cause severe odor problems to the general public. In this case, odor problems associated with gas venting should be compared to the similar (but more certain) ordor problems associated with the sometimes haphazard treatment of manure that the biogas operations replaces.

4.5 SPECIAL CONSIDERATIONS IN THE EGYPTIAN CONTEXT

The extensive research programs at the National Research Center and elsewhere in Egypt have already indigenized biogas technology to a significant degree. The technical resources are available domestically to undertake projects of considerable size and technical sophistication. As with projects anywhere, success will depend on demonstrating technical, economic and political feasibility, followed by careful, detailed design work, followed in turn by competent and craftsmanlike construction, shakedown and operation.

Special considerations in the Egyptian context would include several items. First, the lack of primary infrastructure in rural areas indicates that non-grid-connected biogas systems serving only the needs of the farm and surrounding local may be the most practical biogas application. Second, the prevalence of fecal and waterborne pathogens in the Egyptian environment gives an investment in a pathogen-neutralizing anaerobic digester a highly favorable social significance. Third, and on the same subject, thermophilic (high-temperature) digestion neutralizes a larger number of pathogens than does mesophilic digestion, making it the process of choice from the societal point of view. Finally, anaerobic digestion is a sophisticated enough technology that system operators will need regular access to expert troublshooters to correct problems as they develop. An extension service that gives operators easy access to NRC, University and other trained personnel will be an important contribution to any project's success.

4.6 CURRENT R&D THRUST FOR BIOGAS TECHNOLOGY

4.6.1 Egyptian R&D

Most Egyptian R&D in the area of biomass energy emphasizes biogas production although research on improving design and efficiency of woodstoves and the development of small gasifiers is also underway. The most intensive

biogas R&D involves the development of low-cost digester designs.

A national demonstration project for the development and application of village-scale digesters has been undertaken by the National Research Center (NRC) since 1979. At present there are about 45 field demonstrations, most of which are household units, along with 4 larger-scale units constructed in conjunction with livestock operations. Both laboratory and pilot scale testing involving modified Chinese and Indian digester designs are being conducted utilizing cattle manure, agricultural residues and water hyacinth. The goal of this research is to demonstrate that appropriate biogas technology is technically, socially and economically feasible in rural areas of Egypt.

The faculties of Agriculture in Fayoum, Minia and Assuit are currently conducting research, in conjunction with the Faculty of Engineering, Cairo University, involving an integrated renewable energy system which includes wind, solar and biogas energies.

In other research activities, anaerobic digestion of mixtures of cow dung, sewage and agricultural wastes at different ratios, organic loadings and temperatures are being examined. The effects of precomposting, digestion, and post-composting on the survival of bacterial pollution indicators and pathogens are also being investigated. Since most digesters operate at below 10 percent solids, R&D on high-loading digesters and the use of recycle is also being undertaken.

According to the Egyptian national strategy, an attempt will be made to establish 400,000 digestion units by the year 2000, including 25,000 large-scale units. In constructing these units, the constraints of lack of space for digester installation and the insufficient number of animals owned by a large number of rural families will be taken into consideration. It is estimated that 6 percent of the total rural energy needs and a significant portion of fertilizer requirements can be met with this program.

EXHIBIT 4.8

PRESENT BIOGAS UNITS IN EGYPT

No.	Executing Agency	Site	System Design	Size m^3	Date of Construction	Status
1	F/A Fayyoum	Fayyoum	Chinese	10	1978	N/O
2	F/A Fayyoum	Abu Gandeer	Chinese	10	1980	Irreg.
3	ARC	Moshtuhor	Chinese	45	1980	Irreg.
4	ARC	Moshtuhor	Indian	10	1980	Oper.
5	ARC	Moshtuhor	Indian	6	1980	Oper.
6	ARC	Moshtuhor	Indian	38	1981	Oper.
7	ARC	Moshtuhor	Indian	8	1980	Oper.
8	ARC	Toukh	Indian	8	1981	Oper.
9	ARC	Toukh	Indian	7	1981	Oper.
10	ARC	Toukh	Indian	8	1981	Oper.
11	ARC	Embaba	Chinese	10	1981	Oper.
12	ARC	Embaba	Indian	20	1981	Oper.
13	ARC	Embaba	Indian	17	1981	Oper.
14	ARC	Embaba	Indian	10	1981	Oper.
15	F/A Alexandria	Embaba	Indian	8	1981	U/C
16	Owner	Beheira	Indian	8	1981	U/C
17	NRC	Beheira	Chinese	10	1979	N/O
18	NRC	Beheira	Chinese	6	1980	Worked 8 mos.
19	NRC	Beheira	Pressurized Indian	7	1981	Oper.
20	NRC	El-Menawat	Modified-Indian	10	1981	Oper.
21	NRC	El-Menawat	Modified-Chinese	10	1981	Oper.
22	NRC	Omar Makram	Modified-Indian	8	1982	Oper.
23	NRC	Omar Makram	Modified-Indian	6	1982	Oper.
24	NRC	Omar Makram	Modified-Chinese	10	1982	Oper.

The arable land in Egypt comprises 4% of the total surface area of the country. Therefore, it is unlikely that bio-energy production will have as much influence in energy applications as in countries like Brazil. However, the fact that Egypt currently utilizes biomass to meet one-third of its energy needs illustrates the potential contribution of bio-fuels.

In Egypt, the use of agricultural residues and animal wastes in energy systems consists primarily of burning in open fire stoves, and mud ovens, etc., for cooking and heating. These processes are inconvenient, thermally inefficient and may pose health hazards due to heavy indoor concentrations of smoke. Consequently, people in rural areas often switch to kerosene or butane stoves whenever they can afford to do so. The present ways of handling, storing and burning biomass are not only wasteful but also pose serious threats to the ecological balance.

It has been estimated that the utilization of crop residues already used as energy sources and animal and human wastes available in Egyptian villages to produce biogas, could provide the major portion of residential energy requirements. That is, biogas could substitute for all noncommercial energy sources including kerosene and butagas. Further, an additional amount of organic fertilizer equivalent to more than 12 M tons of manure would be produced, which would otherwise be lost through the direct burning of crop residues and dung cakes.

As stated earlier, most of the development activity in Egypt is oriented towards biogas production. Exhibit 4.8 presents existing Egyptian biogas units. Most digesters installed to date in developing countries have served individual families and have used human or animal wastes as feedstock.

4.6.2 U.S. Government R&D

In the United States, the Federal Government during the past decade has initiated numerous programs to foster the development of biomass energy. Thirty-

towards energy conversion and conservation to support future development in energy-related biotechnology. BER focuses on comprehending biological principles and mechanisms rather than the development of specific technological processes.

One of the objectives of the BER subprogram is to provide the (biological) foundation of basic information for the Department's efforts for production of fuels and chemicals, microbiological transformation of organic materials for conservation, and using biological systems for resource recovery. The program has two facets, botanical investigations and microbiological studies.

The plant science research includes: photosynthetic energy conversion; limitations of green plant productivity; adaptability for growth and productivity of plants under conditions of environmental stress; the biological regulatory processes which determine how plants synthesize and distribute reduced carbon compounds both quantitatively and qualitatively; and the biochemical expression of genetic information. Emphasis is also placed on other topics related to comprehending plant productivity for fuels and chemicals.

The microbiological research includes studies on anaerobic microorganisms involved in fermentations, including methanogenesis; the biochemical pathways of degradation of abundant substrates, such as cellulose, hemicelluloses and lignins; and the genetics of anaerobic microorganisms. Such phenomena as thermophily, end product inhibition, and other regulatory aspects of fermentations are also given emphasis. Microbial degradation and conversion mechanisms involving hydrocarbons and other carbonaceous fuel or chemical materials are considered.

4.6.2.3 Office at Industrial Programs

The Office of Industrial Programs (OIP) at the U.S. Department of Energy supports R&D for industrial energy conservation technologies that have the potential for saving scarce fuels, and encourages private industry to implement these technologies. Technical objectives of OIP include (1) developing innovative

processes and technologies which advance the state-of-the-art of industrial processes, (2) accelerating development of high-risk, high-payoff technologies to improve energy productivity, (3) utilizing the energy embodied in waste streams, (4) improving utilization of waste materials as well as better utilization of new materials, and (5) developing processes which increase energy savings and/or shift fuel consumption from scarce to more plentiful resources.

OIP has supported the development of seven energy-integrated farms designed to combine diverse on-site energy sources and provide continuous energy, reducing the farm's dependence on energy produced from nonrenewable resources. A number of different biomass processes are used on these farms, including production of ethanol from sweet sorghum and milo, methane generation from manure by anaerobic digestion, and subsequent generation of electricity from the methane.

4.6.2.4 Biofuels and Municipal Waste Technology Division

The objectives of the Biofuels and Municipal Waste Energy Technology Division (BMWT) at the U.S. Department of Energy are to provide a generic technology base for biomass energy production and conversion to reduce uncertainty to the point where industry will invest in biomass technology development, and to establish the feasibility of biomass technologies that increase feedstock supply without adversely affecting the supply and prices of food and fiber. Specific technical objectives are to increase biomass feedstock productivity by factors of 2 to 5 over current yields through species screening, genetic improvements, and innovative agronomic practices; establish the technical feasibility of aquatic species and biological hydrogen as economical sources of biomass feedstocks; and improve the performance of conversion processes through advanced research of fundamental reaction mechanisms and kinetics.

Current research efforts, managed by the Solar Energy Research Institute, are being directed toward the digestion of agricultural residues that are

lignocellulosic and difficult to digest by other biochemical means. Pretreatment of these feedstocks, anaerobic bacteria strain selection, and nutritional factors that may improve the methane-producing capability of the cultures are being examined. The microbiology and biochemistry of digestion cultures and the genetic manipulation of bacteria in the methane production cycle are also being studied.

4.6.3 Worldwide Experience Using Biogas Technology

During the past five years, significant advances in biogas production technologies have been made. Many of these developments immediately pertain only to large-scale, municipal-type digesters found in urban areas. However, the developing countries have taken an especially large interest in biogas production since they are largely rural and thus often have abundant animal and crop wasts available for digestion. One of the most extensive biogas programs is that of India. Thirty years of R&D has resulted in an accumulation of useful information and data, especially regarding digestion of cow manure. Several institutions have played a major role in this program: Indian Agricultural Research Institute, New Delhi; the Khadi and Village Industries Commission (KVIC), Bombay; the Gobar Gas Research Station, Ajitmal; and the Planning Research and Action Institute, Lucknow. Biogas plant designs published by KVIC utilize concrete tanks and inlet and outlet basins, with floating gas holders. These single family units have no pumps, motors, mixing devices or other moving parts and digestion occurs at ambient temperatues.

Also operating in India, is a larger scale plant managed by the Bharatya Agro Industries Foundation that produces 340 cu.m/day using dung from a cattlebreeding operation. A community plant has also been installed in the village of Fatah-Singh-Kapura by the Gobar Gas Research Station. The plant operates successfully on dung supplied by the villagers, providing cooking gas,

village lighting, water pumping and grain milling. Several other community biogas plants are being installed throughout India since these large-scale community systems have potential of being economically advantageous.

The Organization of Rural Development in the Republic of Korea has installed 25,000 digesters. However, severe winters and non-cattle-based economy have adversely affected this program. A major campaign was conducted from 1969-1976 that encouraged the construction of biogas plants that digest both animal and human wastes.

Growing interest in Pakistan has resulted in the construction of approximately 100 biogas plants. Low winter temperatures and the high cost of imported steel for fabrication of gasholders has generally restricted the program. The Appropriate Technology Development Organization of Pakistan has recently undertaken design and construction work on low priced, 10 cu.m-capacity, fixed gasholder digesters based on Chinese technology

There also is an increasing interest in biogas systems in the Philipines, especially with respect to pollution control and the associated public health benefits. The National Institute of Science and Technology has installed units, including 48 digesters (22 cu.m each) at an integrated agroindustrial complex of 7,500 hogs. The resulting gas is used as fuel for canning, rendering, cooking, electricity generation and deep-well pumping.

Biogas utilization in Thailand has increased rapidly over the past several years with 225 units now operating. Plans call for the installation of 50 digesters every year. Plants have also been promoted by the Agricultural Economic Department, the Sanitation Division of the Health Department and the Applied Scientific Research Corporation. The majority of systems presently focus on waste treatment rather than energy production.

Although Indonesia has only 12 operating biogas plants at present, numerous experiments are undergoing evaluation with respect to reduced constructior

costs.

One of the most extensive programs is that of the People's Republic of China, with the reported installation of seven million plants. The destruction of bacteria cointained in the waste is stressed so that the digester residue can be safely applied to crops as fertilizer.

At the end of 1984, over 50 on-farm biogas systems were operating in the U.S. and nine were operating in Canada. Most of these systems utilize a cattle manure and integrated farm systems are growing in popularity. In Europe, with typically higher population densities, 500 on-farm systems were operating at the close of 1984.

5.0 ENERGY FROM MUNICIPAL SOLID WASTE

5.1 OVERVIEW OF PROCESS OPTIONS

The conversion of municipal solid waste (MSW) to energy is a time-tested and well-developed concept. Several different types of technologies exist to recover energy and materials from municipal solid waste.

Municipal solid waste reduction technologies can provide a range of outputs, depending upon the system and operational requirements. Power output can be methane gas, or high or low pressure steam to provide heat or mechanical power. Output can include electricity for process use or for sale to the electric grid.

Most of the waste conversion technologies discussed here are used to provide steam, which can provide heat or mechanical power for processes.

There are five major categories of waste conversion technologies available in the market. These are (1) mass incineration; (2) source separation and incineration; (3) refuse derived fuel; (4) anaerobic digestion of municipal solid waste and (5) land fill gas. In general terms, the major differences between these waste conversion technologies concern:

1. the quantity and make-up of wastes handled;
2. capital and operating costs;
3. on-site energy requirements; and
4. end products.

5.1.1 Mass Incineration

Mass incineration technologies are designed to burn raw, unprocessed waste. The mass burning system is a well-established, commercially developed system in which waste is fed to the combustor by a hydraulic ram or gravity chute. The output from mass incineration systems is thermal energy, in the form of steam, and/or recoverable waste. Systems can also be designed to provide electricity.

5.1.2 Source Separation

An alternative to mass incineration is to sort the waste prior to burning it. The sorting process can remove ferrous metals, aluminum, glass, and other valuable and non-combustable materials. The waste can also be shredded to improve the evenness of burning. Source separation and preprocessing of the waste improve the burn, reduce boiler maintenance, reduce the quantity of ash to be disposed of and recover valuable recyclables. However, separation and other preprocessing add significantly to both the construction and operating costs of a plant, making the operation more complex and vulnerable to additional operating problems. Like mass incineration, this process produces steam or electricity as one of its products.

5.1.3 Refuse Derived Fuel (RDF)

Refuse derived fuel (RDF) is processed municipal solid waste. The principal advantage of RDF over raw waste is that it is more combustible, transportable, and homogeneous (see Exhibit 5.1).

There are four types of RDF: fluff, densified, dust, and wet. Fluff RDF consists of small sized particles with a very low quantity of inert material. Densified RDF is fluff RDF mixed with binders, and then compressed into small pellets or briquettes. Dust RDF consists of fluff RDF mixed with embrittling agents, and then reduced. Wet RDF is made by mixing waste and water in a wet pulper to a slurry; nonpulpable material is removed; the pulped material is further separated and dried.

RDF is typically 50 to 75 percent (by weight) of the incoming waste. RDF is produced from municipal solid waste through a series of processes including size segregation, size reduction, removal and recovery of inert materials. The equipment required to process waste into RDF depends upon the type of RDF being produced. The more processing involved, the greater the production costs.

EXHIBIT 5.1

COMPARISON OF ENERGY VALUES OF MUNICIPAL SOLID WASTE AND CONVENTIONAL FUELS

Energy Source	Energy Values (kJ/kg)
Municipal Solid Waste (MSW)	10,500
Refuse Derived Fuel (RDF) - Fluff	11,500 - 14,000
Refuse Derived Fuel (RDF) - Dust	18,000
Peat	7,500
Wood	10,900
Lignite	16,400
Sub-bituminous B	23,800
Anthracite	25,800
Bituminous - Hi Volatile B	28,400
Bituminous - Volatile	33,600
#6 Fuel Oil	42,400
#2 Home Heating Oil	45,500
Methane	55,500

Source: EPA, 1979

There are two technologies capable of using RDF: co-fired boilers and dedicated boilers. Each of these systems has a smaller furnace and boiler size than mass incineration systems, due to the higher heat content of RDF. The maintenance costs associated with these systems tends to be lower than that of mass burning systems because of the higher quality of the refuse.

Co-fired systems use refuse-derived fuel to provide a portion of the energy input of a fossil fuel-fired combustion system. Such systems use two fuels, refuse-derived fuel and a commercial fuel (generally coal). Co-fired systems can produce high-temperature, high-pressure steam suitable for most industrial processes.

Dedicated boilers are designed and constructed to accept RDF as the primary fuel. The dedicated boilers produce higher-temperature, higher-pressure steam than mass incineration systems. Co-fired systems, owing to their use of commercial fuels, produce higher-pressure, higher-temperature steam than dedicated boilers.

5.1.4 Anaerobic Digestion of Municipal Solid Wastes

As an alternative to incinerating municipal solid waste, several facilities have explored anaerobic digestion as a means of stabilizing waste. The anaerobic digestion process is similar to that used for stabilizing sewage sludge: material is fed into an oxygen-free, closed container where acid producing bacteria initially break down the organic component of the waste and methane-producing bacteria transform the acid products into usable methane gas. Municipal solid waste must be extensively pretreated prior to introduction into a digester. The waste must be sorted to remove non-organics such as glass and metals and shredded to ensure that only small waste particles enter the digester. Large or inert waste particles inhibit complete and rapid digestion.

There are a few full-scale municipal waste digestors in operation, but

There are two technologies capable of using RDF: co-fired boilers and dedicated boilers. Each of these systems has a smaller furnace and boiler size than mass incineration systems, due to the higher heat content of RDF. The maintenance costs associated with these systems tends to be lower than that of mass burning systems because of the higher quality of the refuse.

Co-fired systems use refuse-derived fuel to provide a portion of the energy input of a fossil fuel-fired combustion system. Such systems use two fuels, refuse-derived fuel and a commercial fuel (generally coal). Co-fired systems can produce high-temperature, high-pressure steam suitable for most industrial processes.

Dedicated boilers are designed and constructed to accept RDF as the primary fuel. The dedicated boilers produce higher-temperature, higher-pressure steam than mass incineration systems. Co-fired systems, owing to their use of commercial fuels, produce higher-pressure, higher-temperature steam than dedicated boilers.

5.1.4 Anaerobic Digestion of Municipal Solid Wastes

As an alternative to incinerating municipal solid waste, several facilities have explored anaerobic digestion as a means of stabilizing waste. The anaerobic digestion process is similar to that used for stabilizing sewage sludge: material is fed into an oxygen-free, closed container where acid producing bacteria initially break down the organic component of the waste and methane-producing bacteria transform the acid products into usable methane gas. Municipal solid waste must be extensively pretreated prior to introduction into a digester. The waste must be sorted to remove non-organics such as glass and metals and shredded to ensure that only small waste particles enter the digester. Large or inert waste particles inhibit complete and rapid digestion.

There are a few full-scale municipal waste digestors in operation, but

the process has not yet gained widespread acceptance. Research on improved process and hardware designs is currently being pursued.

5.1.5 Landfill Gas

Anaerobic digestion and methane production occur naturally in many large landfills where the waste is layered to depths of 15 meters or more. The methane produced at these depths can be tapped by drilling a series of collection wells that channel gas to the surface for central collection, scrubbing, compression, and use. This process requires a minimal hardware investment when compared with controlled anaerobic digestion; but it is a less reliable source in the sense that each collection well taps a finite reservoir of gas that is difficult to characterize precisely in advance.

Landfill gas is often collected and flared for safety and aesthetic (odor) reasons. If this is already done at a landfill, then it may be a simple matter to use the gas constructively instead of flaring it.

5.1.6 Pros and Cons of the Options

An evaluation of the different municipal-solid-waste-to-energy conversion options requires an assessment of resource availability, market readiness, economic viability, and operating experience.

5.1.6.1 Resource Availability

Egypt has a population of 45 million people, with most of the population living in a densely packed strip along the Nile River. This high population density ensures that a sufficient quantity of waste is available. The collection, transportation, and preparation of this waste will require an infrastructure that is currently either inadequate or not in place. The development of this infrastructure is a necessary prerequisite for municipal solid waste energy conversion in Egypt. At least two cities are viable sources, Cairo and Alexandria. The Cairo area generates about 4200 tons of municipal solid waste

per day. It is estimated that 1500 tons per day are currently collected and recycled for other uses. The remaining 2,700 tons per day represent a significant resource which can be converted to energy.

The city of Alexandria generates approximately 1,700 tons of municipal solid waste per day, of which 700 tons per day are collected and recycled for other uses. Thus, there is a significant potential for energy from the remaining 1,000 tons per day.

The existing waste collection systems of both cities are inadequate. In Cairo, it is estimated that 30 percent of the garbage generated is left on the streets. Larger truck fleets will be required in both cities to improve the collection of municipal waste as well as improve the viability of converting this waste to energy.

5.1.6.2 Market Readiness

The availability of waste reduction technologies in the market is dependent upon the state of development and degree of successful commercialization for each of the technology types. Most of the systems discussed here are either in or beginning commercial operation.

Mass Incineration -- Mass incineration of municipal solid waste in refractory, modular, and waterwall systems is currently in commercial operation. This technology has been widely used in the United States, Europe, and Japan. Source separation prior to incineration is a fairly recent innovation that has been commercially implemented in only a few locations.

Refuse-Derived fuel -- Both co-fired systems and dedicated refuse-derived fuel boilers have been in commercial operation since 1972 in the United States. More widespread use of refuse-derived fuel systems has occurred in Europe. Earlier systems were plagued with reliability problems. Systems built more recently have incorporated design changes to reduce these problems.

Anaerobic digestion -- While this process has been successfully demonstrated, it has not yet been commercialized to a significant extent. The largest plant in the U.S. has a capacity of 100 tons per day (Pompano Beach, Florida).

Landfill gas -- More than sixty U.S. cities currently collect landfill gas for constructive use. The technology is well established. The viability of individual projects depends to a great degree on the methane resource available a each site.

5.1.6.3 Economic Viability

The cost of a municipal solid waste reduction technology is dependent upon several factors, including: the technology type; the system size; the output; and the quality of refuse burned.

In general, modular systems tend to be less expensive than custom built systems in the small size range (<100 tons/day). The economics of incineration systems are also dependent upon the level of waste preprocessing. Pre-processed waste does not require expensive in plant fuel processing systems to remove non-combustible materials.

Installed capital costs for these systems is dependent upon pre-processing equipment, system size, site specific requirements, and many other factors. In favorable circumstances municipal solid waste conversion systems can be installed for $20,000/TPD, but systems can easily cost $150,000/TPD and more. The economic feasibility of municipal solid waste reduction should be determined on a per-application basis.

5.1.6.4 Industry Status

Many of the companies working in this field ar large and well-established, while others are relatively new businesses. the larger companies (GE, Babcock & Wilcox, Combustion Engineering, among others) are international in scope with a broad range of products and services including maintenance and service contracts,

and in some instances, financing.

Municipal solid waste-to-energy conversion technologies have been in existence for over 50 years. The technological sophistication of these systems has increased dramatically over this time period, particularly in the last 15 years.

The combustion of waste in large waterwall incinerators or in small scale modular systems are the most technologically developed technologies to date. Although these technologies have reached commercialization and others are emerging, there is still research being conducted for the purpose of minimizing emissions and improving system economics.

5.2 MASS-BURN TECHNOLOGY DESCRIPTION

Mass-burn incineration is the best established of the technologies available for converting municipal solid waste to usable energy. Several types of systems are on the market, including refractory systems, waterwall systems, and modular units. The first two system types mentioned are site built plants, while the modular units are usually prefabricated and shipped to the site.

5.2.1 Site Built Systems

5.2.1.1 Refractory Systems

The refractory-lined mass incineration system has a heat resistant coating, or refractory lining, in the combustion chamber that decreases heat transfer to areas outside the incinerator. This lining protects its outer shell from extreme temperature changes. The refractory-lined combustor does not recover energy in the combustion chamber. Hot combustion gases leave the chamber to an auxiliary heat exchanger or waste heat boiler where the heat energy is recovered (See Exhibit 5.2).

Refractory technologies require large volumes of combustion air to prevent furnace components from overheating. The major drawback of such a system is that these larger air volumes carry more particulate emissions. Control technologies for air pollution add considerably to the capital and operating cost of these systems.

The quality of the municipal solid waste affects both the design and required maintenance for a system. Higher quality waste which costs more to process, requires less maintenance and a smaller combustor than a system using lower quality MSW.

5.2.1.2 Waterwall Systems

The second mass incineration technology is the waterwall system. In the waterwall incinerator, the walls of the furnace are lined with tubes of circulating

control, and disposal of pollutants emitted as a result of the combustion of municipal wastes. Materials research is conducted to better enable identification and analysis of liquid and gaseous fuels produced from municipal solid wastes with the aim of assessing possible alternative uses and processing of such fuels. Feedstock preparation efforts entail the research into concepts of developing better methods of handling and processing municipal solid waste in addition to studying innovative ways of processing waste into different forms of refuse-derived fuel (RDF).

Part of the environmental research effort includes an evaluation of combustor stack emission control technologies. The objective is to obtain detailed data on the identity and quantity of major environmental pollutants emitted during the combustion of municipal solid waste in large-scale mass burners and small-scale modular mass burners and to test and evaluate control technologies that can be used for pollution abatement in solid waste combustion. The testing will provide a data base for judging the effectiveness of electrostatic precipitators and baghouses. Test results from modular units not using a control technology would provide a basis for decisions by regulatory agencies on the problems presented by such units. Identification of new control technologies will be made and a data base on their effectiveness compiled for use on municipal solid waste combustors.

The disposability of MSW combustor ash is also being examined. The objectives of this task are to determine the long term storability of combustor char in conventional landfills and to develop low-cost processing schemes to significantly enhance this storability. Detailed data will be generated on the chemical and physical state of municipal solid waste combustor ash and on the leachability of heavy metals from the ash. Processing techniques which would enhance the safe disposal of the ash will also be identified.

Also being explored are the variations in flux of gases through cover of

The objective is to develop innovative powdered and densified fuel (RDF) concepts for the processing of waste which can produce fuels of desired quality, at lower cost, and with greater consistency than the RDF fuels that are currently available. In addition, the fuel should be easily transportable and stable under long-term storage conditions. Activity is underway to provide the necessary fundamental knowledge of various unit process operations specifically suited for the handling of municipal solid waste. This will be accomplished by the development of mathematical models and design equations. This activity will provide a fundamental knowledge of the unit operations of disc screens and shear shredders and will provide the data base for use in the systems integration modeling effort. Finally, work is beind done to develop a computer modeling program that will allow designers of MSW processing systems to select the proper processing equipment and to sequence this equipment into an integrated RDF production system in the most economical and reliable manner.

5.6.3 Other R&D

European mass-burn MSW incineration technology is highly advanced and work continues at a rapid pace on efficiency, process, and environmental problems. New grate designs, mostly proprietary, continue to be developed and marketed. Air pollutant mitigation technologies are being tested in combination to improve emissions in both new and existing facilities. Much of the most advanced work is German and Swiss.

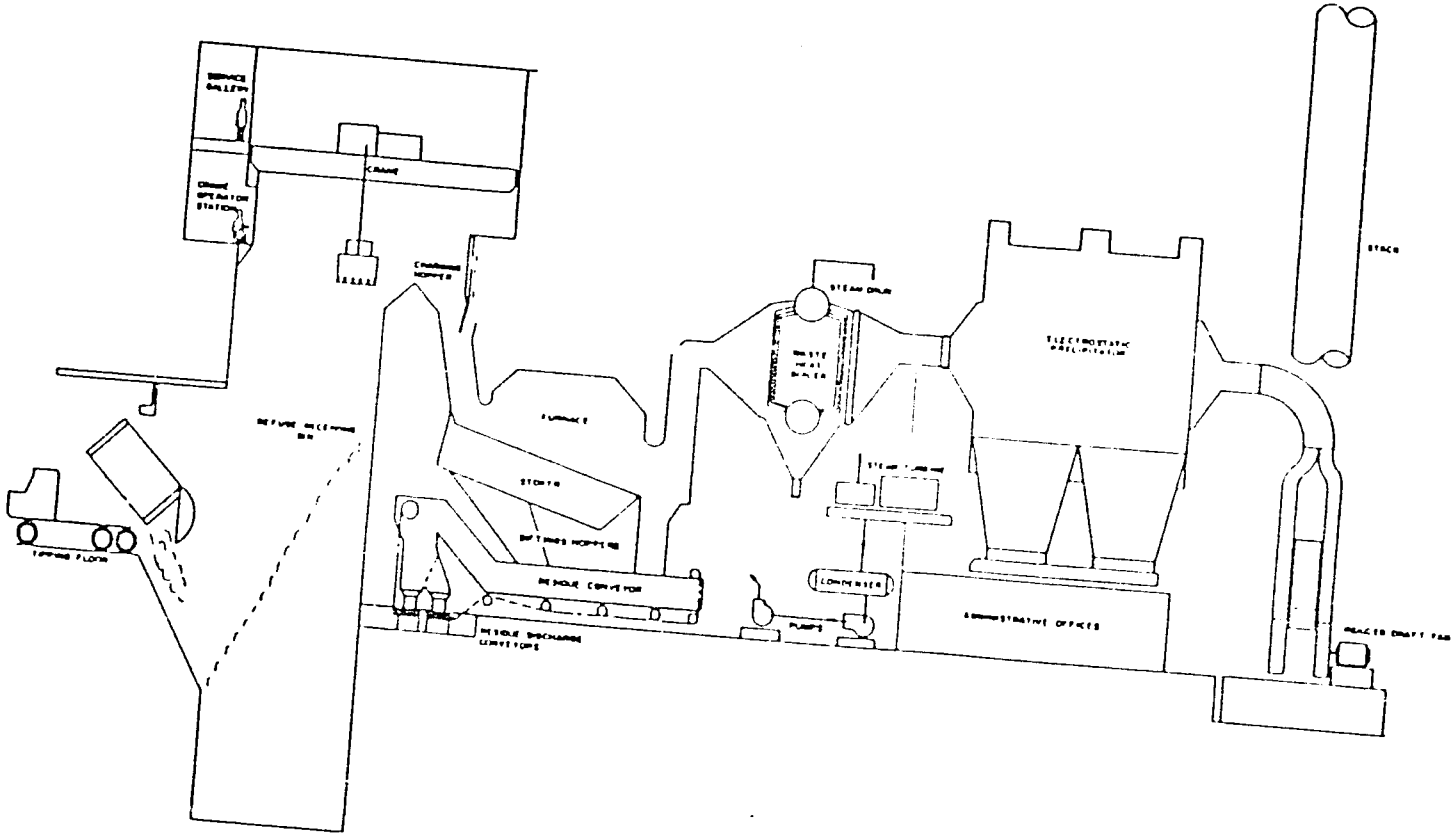

EXHIBIT 5.2

CROSS SECTION OF TYPICAL REFRACTION MASS INCINERATION FACILITY
SOURCE: WASATCH FRONT REGIONAL COUNCIL, 1981

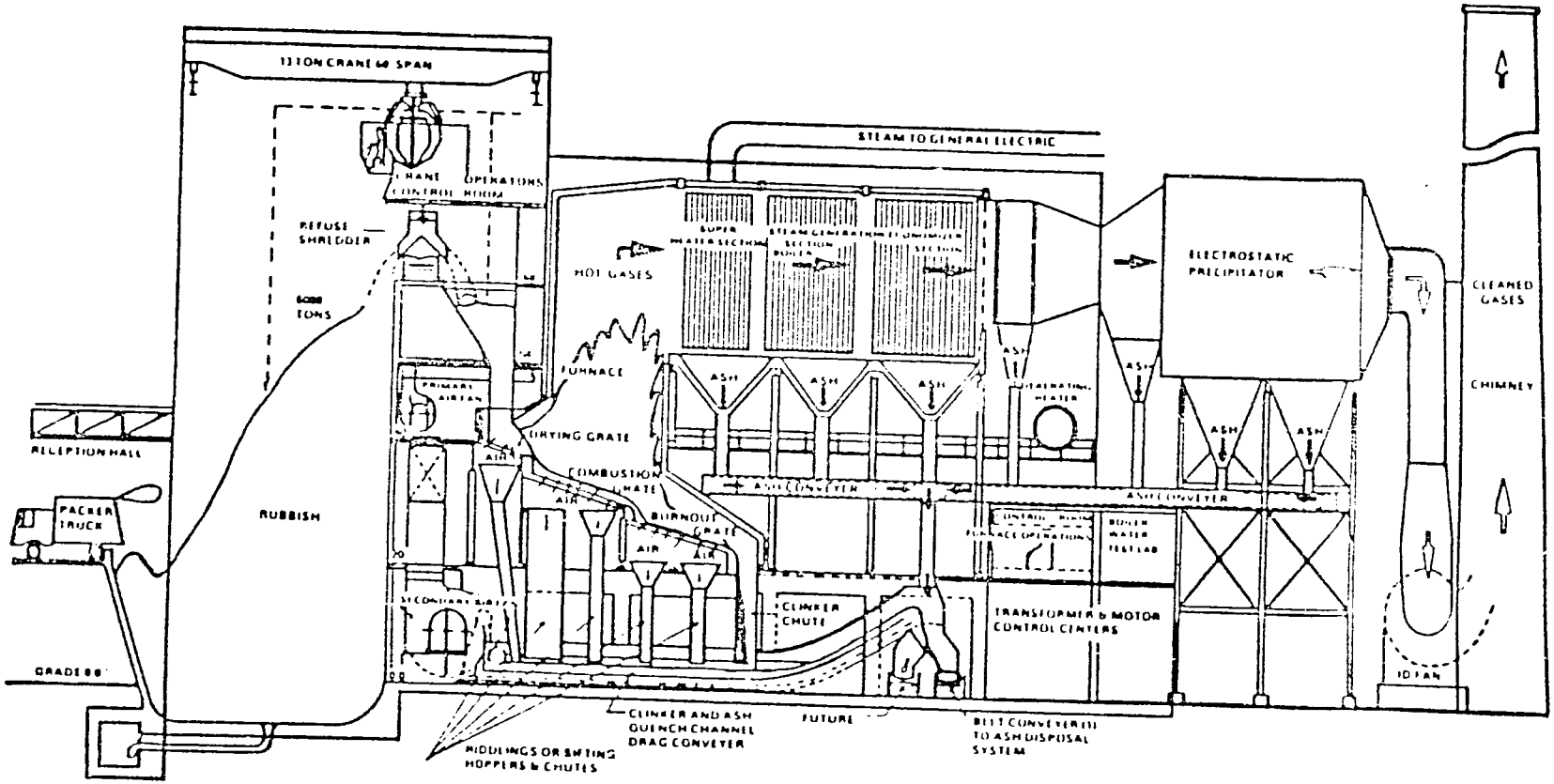

EXHIBIT 5.3

CROSS SECTION OF TYPICAL WATERWALL MASS INCINERATION FACILITY
SOURCE: WASATCH FRONT REGIONAL COUNCIL, 1981

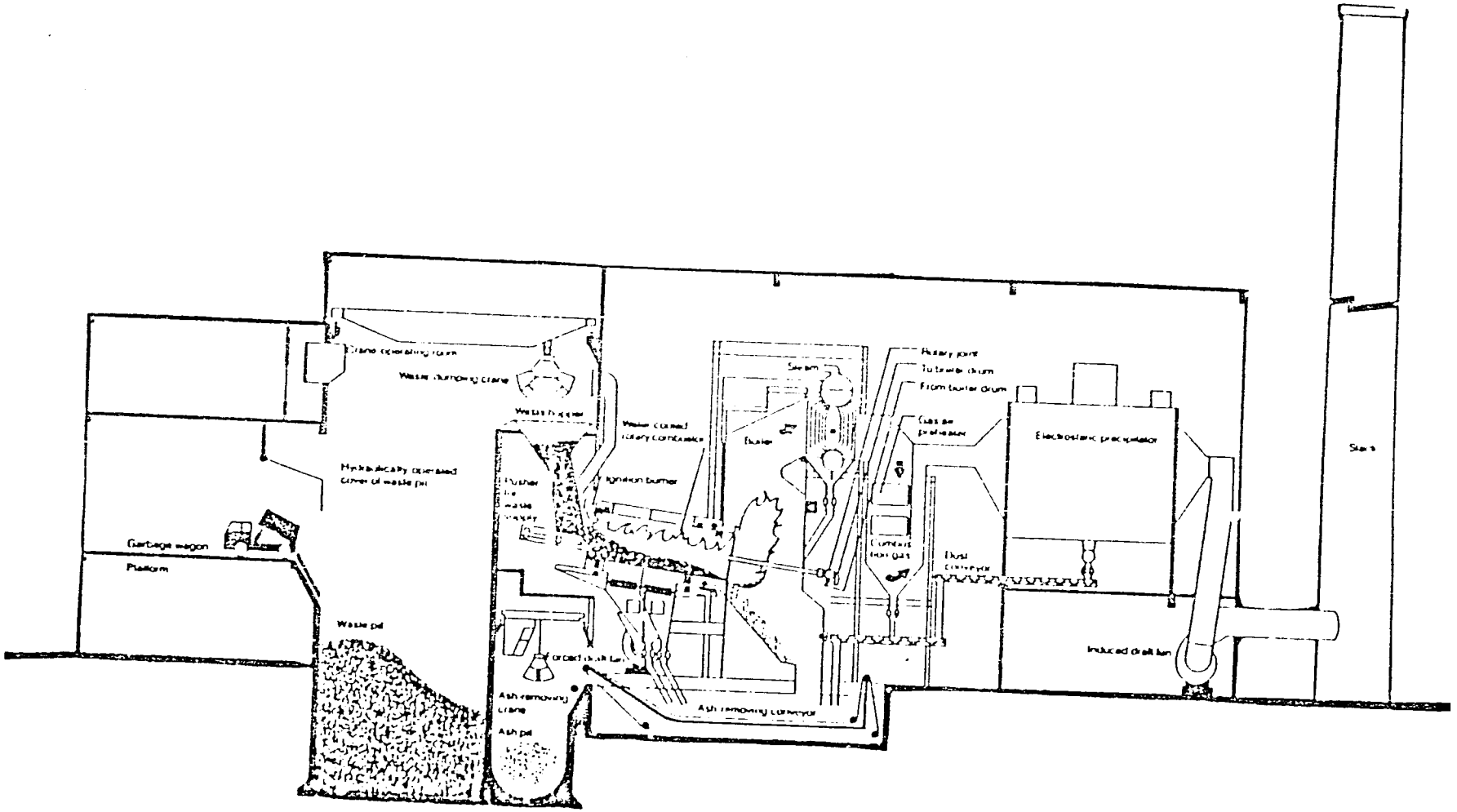

EXHIBIT 5.4

CROSS SECTION OF A ROTARY COMBUSTOR SYSTEM
SOURCE: WASATCH FRONT REGIONAL COUNCIL, 1981

water. The water acts as a coolant and the heat transfer medium. The tubes are usually lined with a refractory coating to protect them from high temperature corrosion and erosion from air-entrained particles (See Exhibit 5.3).

The waterwall incinerator requires less combustion air than a refractory system because the circulating water cools the furnace. The decrease in air requirements allows for a smaller incinerator and fewer emissions.

The heat recovery efficiency of a waterwall incinerator is usually higher than that of a refractory unit. The steam generated by a waterwall unit has higher temperature and and higher pressure, thus offering a broader range of potential industrial appplications.

Continuous feed incinerators often use a reciprocating grate system to move the waste through the combustion chamber and remove the ash after burning. Arranged like descending steps, the grates move horizontally to push the waste down and through the combustion area a step at a time.

The rotary combustor system is a waterwall system, in that the combustor is water-cooled, but with a major operational difference. In this system, the combustor grate, which is inclined, rotates (See Exhibit 5.4). The advantages of this system over the reciprocating grate system are that it has a higher efficiency and a lower maintenance cost. The higher efficiency can be attributed to more effective agitation in the combustion chamber from the rotation, resulting in more complete combustion and heat transfer. The lower maintenance cost is due to the absence of traveling grates and refractory linings.

The rotary combustor is generally more expensive than the waterwall incinerator of comparable size. It is best suited for systems up to 300 tons per day (TPD) of input capacity.

5.2.2 Modular Systems

Modular combustion units for mass incineration are pre-fabricated for

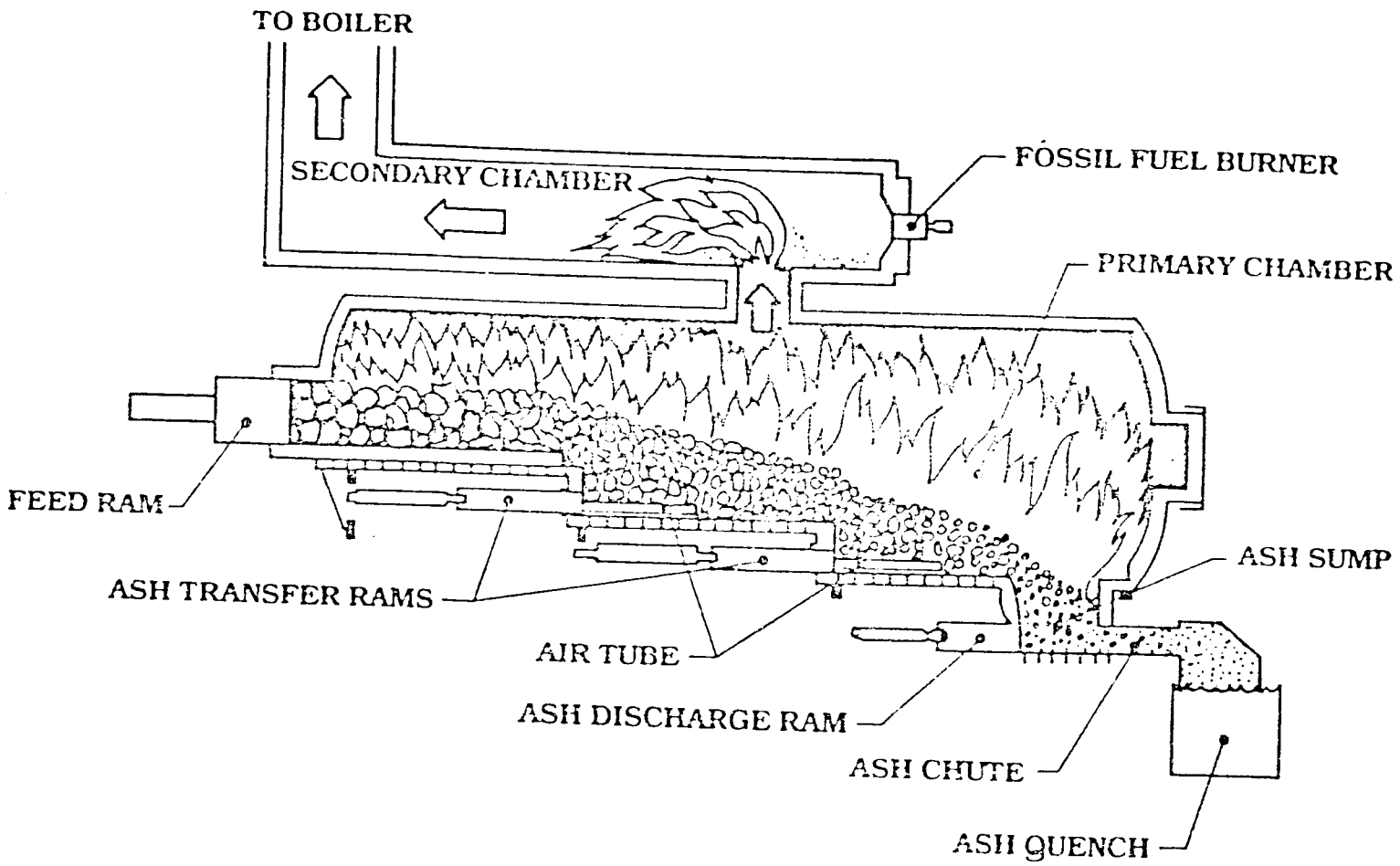

EXHIBIT 5.5

CROSS SECTION OF A MODULAR COMBUSTION UNIT
SOURCE: WASATCH FRONT REGIONAL COUNCIL, 1981

use in small scale applications. For larger applications, up to 100 tons per day (TPD), multiple units can be used. The unit has primary and secondary combustion chambers, with controlled air techniques for combustion of waste material (See Exhibit 5.5).

The modular combustion units are shop-fabricated, include controls and instrumentation, and are typically placed on concrete foundations. A major advantage of these systems is the minimal installation and erection requirements. They offer several advantages over other mass incineration systems. These systems are efficient and well suited for small scale applications; they have relatively short construction periods; there is a high level of redundancy with multiple units; and there is flexibility in sizing with multiple units.

5.3 SYSTEM DESIGN CONSIDERATIONS

A great number of factors must be considered when planning a municipal solid waste energy recovery incineration project. These include the applications for energy that is produced, the resource inventory and its characteristics, site selection, collection and pre-processing of waste, the specifics of the combustion system, an economic analysis, environmental impacts, future technological developments and special considerations in the Egyptian environment.

5.3.1 Energy Applications

Municipal solid waste incinerators produce energy in the form of steam which has a variety of uses. Medium pressure steam may be used for industrial process heating or district heating and cooling, while high pressure steam can be fed through a turbine for conversion to electricity.

Revenue accruing from the sale of energy produced by waste incinerators is always a secondary justification for undertaking such a project. This revenue improves the economic viability of technologies whose primary purpose is to dispose of waste in a safe, aesthetic, responsible, and cost-effective manner.

5.3.2 Resource Inventory and Characterization

A waste stream analysis is a crucial step in designing a municipal solid waste incinerator. Its quantity, composition, characteristics and seasonality affect both the physical design and the economic viability of a project.

Solid wastes may be initially classified by source, i.e municipal, industrial, wastewater/sewage sludge, agricultural, mining or miscellaneous wastes. Municipal solid wastes are generated by residences, retail and wholesale outlets, office buildings, and institutions. Industrial wastes from a variety of manufacturing projects contain a hazardous component (10%-15% in the USA) and a larger non-hazardous component. Sludge from water and sewage treat-

ment plants often has a high moisture content. On a country-wide basis, agricultural wastes, including residues from crop growing, harvesting and processing, meat, poultry and dairy products usually comprise the largest portion of the wastes generated. Mining and milling tailings usually rank second in total weight. Generally, only municipal solid waste, selected industrial wastes, sewage sludge and certain miscellaneous items are considered appropriate incinerator inputs because they are more centralized in urban areas, reducing transportation costs.

Further steps in a waste stream analysis include assessments of gross discards, quantities diverted, processible discards, waste composition and characteristics, and seasonality.

Gross Discards: This is the measure, preferably in units of weight, of all of the garbage normally collected within the area being studied. In the United States, this number, while steadily increasing, is presently about 1.7 kg/person-day in urban/suburban areas. In urban areas of Egypt, this number is probably 50% smaller.

Quantities Diverted: A portion of the waste stream is often reclaimed or recycled because of its high relative value. In the United States, aluminum, high grade paper, glass bottles, tires and ferrous metals are often separated from other wastes for re-use. In Egypt, a significant fraction of total wastes are channeled into re-use by professional garbage pickers.

Processible Discards: Gross discards minus quantities diverted yields processible discards, a measure of the load faced by the incinerator. In the United States, this is usually found to be roughly 90%-95% of gross discards. For Egypt, the percentage figure is likely to be lower.

Waste Composition: The composition of the waste stream will have a significant effect on the quantities diverted for recycling and the suitability of incineration as the means of reduction of processible discards. Each

six distinct programs, representing nine departments, six independent agencies, and an office in the legislative branch fund biomass energy research & development. The main emphasis of Federal biomass R&D is in applied research and engineering, which includes activities related to developing feedstock production and conversion technologies from the conceptual stage through establishing technical feasibility. The programs involved in R&D exhibit a broad range of interests concentrating on five feedstock production categories (woody, herbaceous, aquatic, waste-derived, and environmental) and five conversion technology categories (direct combustion, biochemical, thermochemical, photobiological, and environment).

4.6.2.1 Agricultural Research Service

Agricultural Research Service (ARS) within the U.S. Department of Agriculture administers research and development programs in animal and plant production; the use and improvement of soil, water, and air; the processing, storage, and distribution of farm products; food safety; and consumer services. Research is applied to a wide range of goals, commodities, natural resources, fields of science, and geographic, climatic, and environmental conditions. Biogas-related research activities include:

- production of crops for biomass energy feedstocks;
- hydrocarbon-producing plants as potential multi-use crops;
- chemical, microbiological, and enzymatic biomass conversion;
- energy-saving methods for recovery of usable protein from alcohol or methane fermentation media;
- biomass harvesting and processing; and
- methane generation and utilization.

4.6.2.2 Biological Energy Research Division

The Biological Energy Research (BER) Program at the U.S Department of Energy was established to conduct fundamental studies in biology oriented

EXHIBIT 5.6

NET QUANTITY AND COMPOSITION OF POST-CONSUMER RESIDENTIAL AND COMMERCIAL SOLID WASTE BY TYPE OF MATERIAL, 1978 (U.S.A.)

Material Category	Net Waste Disposed of	
	Quantity (Millions of Tons)	% of Total Waste
Paper	41.3	29.7
Glass	14.8	10.7
Metals	13.3	9.6
Ferrous	11.6	8.4
Aluminum	1.3	0.9
Other nonferrous	0.4	0.3
Plastics	5.8	4.2
Rubber	2.9	2.1
Leather	0.5	0.4
Textiles	3.4	2.4
Wood	4.8	3.4
Total nonfood product waste	86.8	62.5
Food waste	23.4	16.8
Yard waste	26.6	19.2
Misc. inorganic wastes	2.1	1.5
TOTAL	138.9	100.0

Source: EPA, 1981

EXHIBIT 5.7a DENSITIES OF REFUSE AND ASSOCIATED MATERIALS

Material	Density (lb/cu yd)
Loose refuse, no processing	100-200
Refuse from a compactor truck, after dumping	350-400
Refuse in compactor truck	500-700
Shredded refuse	600-900
Refuse baled in paper baler	800-1200
Resuse in landfill	500-900
Dry ash residue	1080
Wet ash residue	1350
Processed Materials	
Ferrous cans (flattened)	800-900
Alumin m cans (flattened)	250
Mixed glass, minus 5/8" cullet	2300
Mixed glass, minus 2" cullet	1000
Baled shredded paper bundles	750

Source: EPA, 1981

Note: 1 lb/cu yd = 0.58 kg/m^3

EXHIBIT 5.7b DENSITIES OF PURE REFUSE COMPONENTS

Component	Specific Gravity	Density (lb/cu ft)
Aluminum	2.70	168
Carboard	0.69	43
Glass	2.50	156
Paper	0.7-1.15	44-72
Steel	7.70	480
Wood	0.60	37
Plastics		
Acrylic	1.18	74
ABS	1.03	64
Polyethylene	0.94	59
Polypropylene	0.90	56
Polystyrene	1.05	65
PVC	1.25	78

Source: EPA, 1981

Note: 1 lb/cu ft = 16 kg/m^3

EXHIBIT 5.8
TYPICAL CHEMICAL COMPOSITION OF MUNICIPAL REFUSE COMPONENTS
(ULTIMATE ANALYSIS)

Refuse Component	C(%)	H_2(%)	O^2(%)	N_2(%)	S(%)	Inerts[1]	Percent Moisture
Newspapers	49.14	6.10	43.03	0.05	0.16	1.43	5.97
Brown paper	44.90	6.08	47.84	0	0.11	1.01	5.83
Magazine paper	32.91	4.95	38.55	0.07	0.09	22.47	4.11
Corrugated boxes	43.73	5.70	44.93	0.09	0.21	5.06	5.20
Plastic coated paper	45.30	6.17	45.50	0.18	0.08	2.64	4.71
Waxed milk cartons	59.18	9.25	30.13	0.12	0.10	1.17	3.45
Paper food cartons	44.74	6.10	41.92	0.15	0.16	6.50	6.11
Junk mail	37.87	5.41	42.74	0.17	0.09	13.09	4.56
Tissue paper	43.9	6.1	49.0			0.93	7.00
Cardboard	45.52	6.08	44.53	0.16	0.14	3.57	
Miscellaneous paper	44.00	6.15	41.65	0.43	0.12	7.65	
Vegetable and food wastes	49.06	6.62	37.55	1.68	0.20	1.06	78.29
Citrus rinds, seeds	47.96	5.68	41.67	1.11	0.12	0.74	78.70
Meat scraps, cooked	59.59	9.47	24.65	1.02	0.19	3.11	38.74
Fried fats	73.14	11.54	14.82	0.43	0.07		
Garbage	41.7	5.75	27.62	2.79	0.25	21.87	
Leather	42.01	5.32	22.83	5.98	1.00	21.16	7.46
Rubber Composition, heel, sole catch	53.22	7.09	7.76	0.50	1.34	29.74	1.15
Plastics							
Average	78.0	8.0	13.0				
High	90.0	10.0					
Low	55.8	7.0	37.2				
Polyethylene	85.6	14.4					
Vinyl	47.1	5.9	18.6(chlorine=28.4%)				
Plastic film Mixed, from municipal refuse, contaminated with food waste	67.21	9.72	15.82	0.46	0.07	6.72	
Other plastics, rubber, leather	47.70	6.04	24.06	1.93	0.55	19.72	
Paints, oils	52.1	8.1	34.8				
Vacuum cleaners	35.69	4.73	20.38	6.26	1.15	30.34	5.47
Evergreen trimmings	48.51	6.54	40.44	1.71	0.19	0.81	69.00
Flower, garden plants	46.65	6.61	40.18	1.21	0.26	2.34	53.94
Lawn grass, green	46.18	5.96	36.43	4.46	0.42	1.62	75.24
Ripe trees leaves	52.15	6.11	30.34	6.99	0.16	3.82	9.97
Softwood, pine	52.55	6.08	40.90	0.25	0.10	0.12	
Hardwood, oak	49.49	6.62	43.39	0.25	0.10	0.15	
Wood	49.00	6.0	42.00			2.28	24.00
Grass and dirt	36.20	4.75	26.61	2.10	0.26	30.08	
Rags	43.9	6.1	49.0			0.93	7.00
Textiles	46.19	6.41	41.85	2.18	0.20	3.17	
Dirt						100.00	
Glass bottles	0.57	0.07	0.36	0.03		99.02	
Glass, stones, ceramics	(same as above, glass bottles)						
Metal cans	4.54	0.63	4.28	0.05	0.01	90.49	
Metals						100.00	

[1]Inerts - ash, glass, metal, stone, ceramics

Source: EPA, 1981

locality will have different proportions of paper, glass, ferrous and non-ferrous metals, plastics, rubber, leather, textiles, wood, food waste and other organic and inorganic waste types composing its waste stream. It is important to conduct a compositional analysis for each area being considered for incineration service because considerable variation is likely to be encountered. The composition of municipal solid wastes for the United States as a whole is shown in Exhibit 5.6. That of Egypt will, of course, differ from this. The densities of several pure refuse components are listed in Exhibit 5.7.

Waste characterization: MSW being fed into an incinerator can be characterized by its moisture and ash, or non-combustible, content. Non-combustibles inhibit good incinerator performance and the waste stream can often by pre-processed to minimize the quantity of this component in the incinerator feed. Waste with high moisture content, such as sewage sludge, is often dried prior to burning. Exhibit 5.8 lists the typical chemical composition of municipal solid waste components.

Seasonality: The quantity, composition, and moisture content of municipal waste varies over the course of the year and both the collection system and the incinerator must be designed to accommodate this variation.

5.3.3 Site Selection

Several criteria merit equal consideration when selecting a site for a municipal solid waste incineration plant. These include site accessibility, proximity to energy markets, proximity to disposal site, and proximity to waste centroids.

Site Accessibility: The local road network will be profoundly affected by the presence of an incineration facility receiving hundreds of truck loads per day of refuse. The roadways must be large enough to handle this increased traffic flow and must be sturdy enough to bear large, heavy, garbage handling

vehicles. Entrances and exit locations should not disrupt local traffic patterns.

Proximity to Energy Markets: When the energy product to be marketed is steam the site should be located adjacent to the energy purchaser. It is rarely practical to transmit steam more than 3 km without incurring uneconomic thermal losses, as well as a loss of quality control. When electricity is the product to be marketed, this constraint is less severe. While electricity can be transmitted over long distances, an economically acceptable site will probably be one located near to an electric grid with enough capacity enough to accomodate the new power source.

Proximity to Disposal Site: Significant amounts of non-combustible ash and residue are generated by an incineration plant, and these products must be disposed of in a landfill. A large plant will have to dispose of several truck loads of residue each day.

Proximity to Waste Centroids: The cost of collecting and transporting waste comprises a large part of total disposal costs. This cost can be minimized by placing the plant in a central location.

Other site selection criteria include proximity to cooling water and boiler feed water; and proximity of neighbors whose local environment might be affected by noise, odors, and ash emanating from the plant.

5.3.4 Input Waste Processing

The nature and moisture content of the waste is an important determinant of the extent of preprocessing needed before incineration, the incineration technology being the other. Certain small modular incinerator types can combust only small sized particles of refuse, requiring shredding to be included in the pre-processing. Other technologies, such as those used for mass-burn incineration, require no preprocessing of the waste stream. The following types of preprocessing are commercially available: screening, shred-

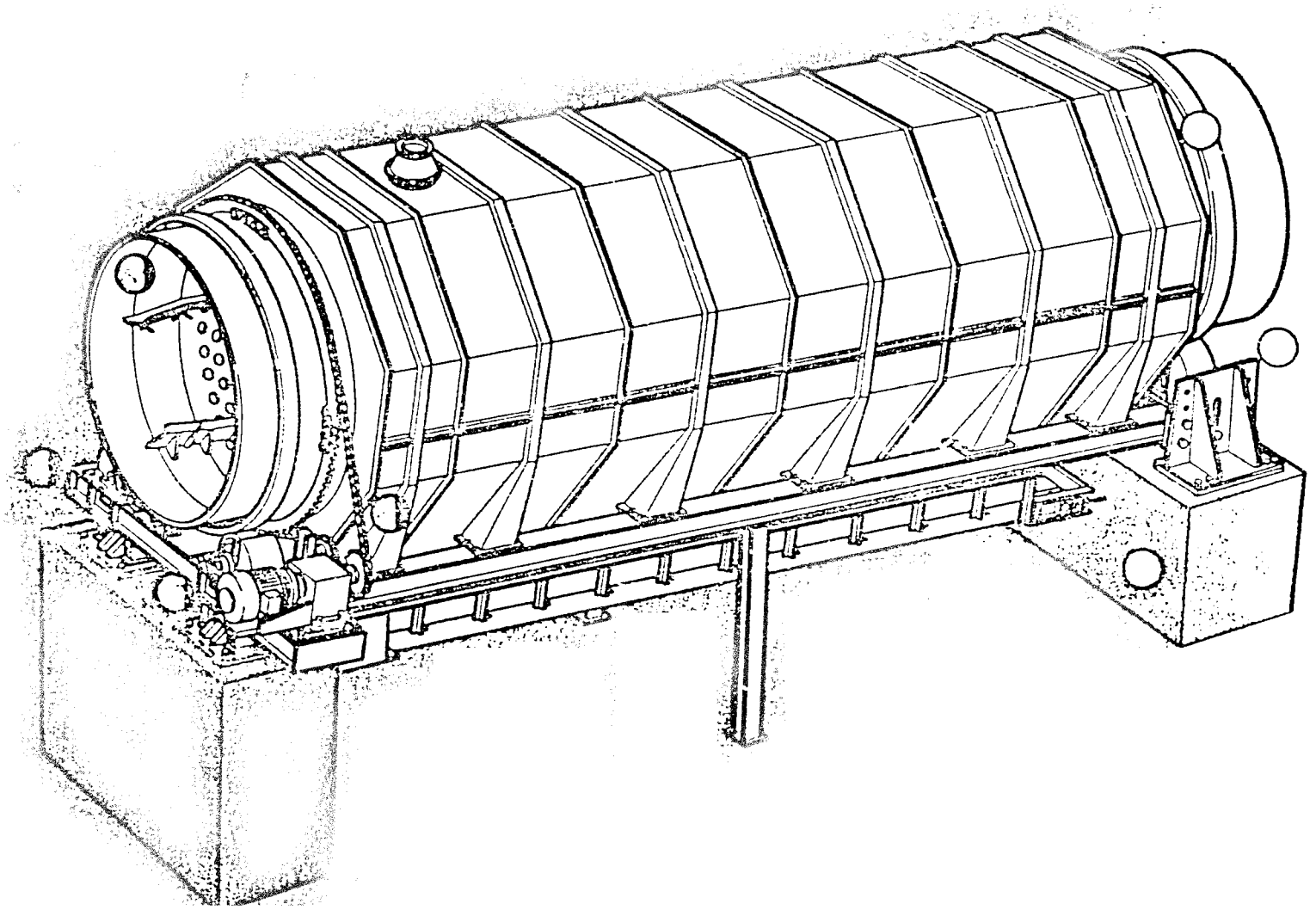

EXHIBIT 5.9

TROMMEL FOR WASTE SCREENING
SOURCE: HEIL CO.

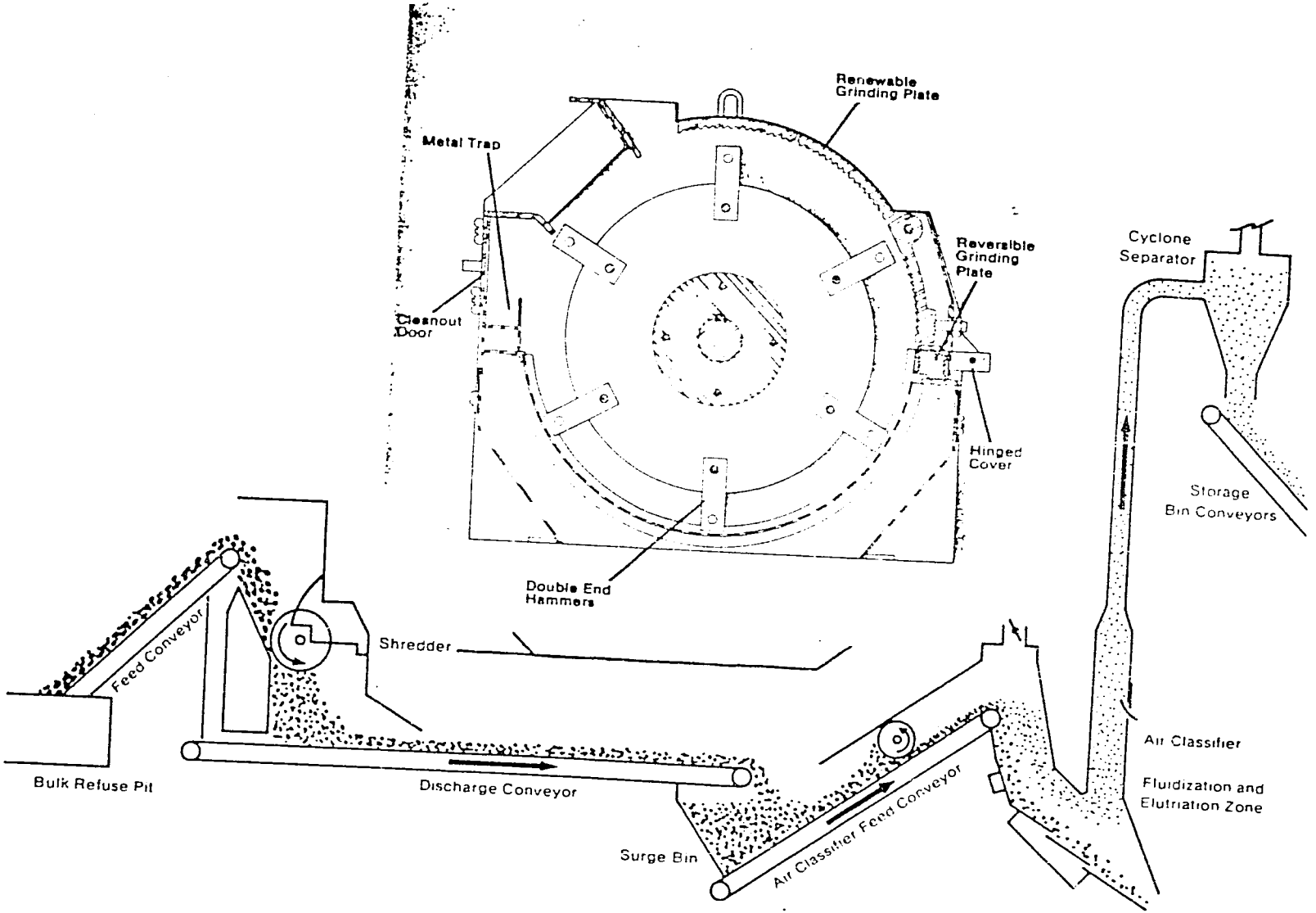

EXHIBIT 5.10

WASTE SHREDDER
SOURCE: WILLIAMS CO.

ding, ferrous metal recovery, and air classification.

Screening: A trommel or inclined rotating cylindrical screen, allows small, heavy, mostly non-combustable waste particles to be separated from the main waste stream. The screen mesh determines the size of the particles being separated. See Exhibit 5.9.

Shredding: This process reduces the size of the waste particles, separates the various components of the waste from each other, opens bags, and makes the waste stream more homogenenous. Shredding is accomplished by using hammers to pulverize waste within a confined space and forcing it through a grating. The process has a high operating cost owing to the large mechanical energy requirements and extreme wear on the hammer and grates. See Exhibit 5.10.

Ferrous Metal Recovery: A drum magnet or an overhead magnetic belt system, with either permanent or electromagnets, can extract ferrous metal objects from the waste stream. Multi-stage separators improve the purity of the metal extracted by selecting out attached non-ferrous objects.

Air Classification: A powerful column of upwardly blowing air can be used to separate light combustibles, such as paper and plastics, from heavier non-combustibles like concrete, metal, and glass. This provides a better burning fuel for the incinerator. See Exhibit 5.10.

5.3.5 Combustion System

Many interrelated components comprise an incinerator's combustion system. From the tipping floor, garbage is usually dumped into a pit large enough to accomodate several days' supply of incinerator input. An overhead crane lifts the garbage out of the receiving pit and into a small charging hopper at the incinerator inlet, where it falls into a combustion grate inside of the furnace. The rubbish progresses along the grate, propelled either by a hydraulic ram, reciprocating grate sections or an inclined rotary grate system. As it

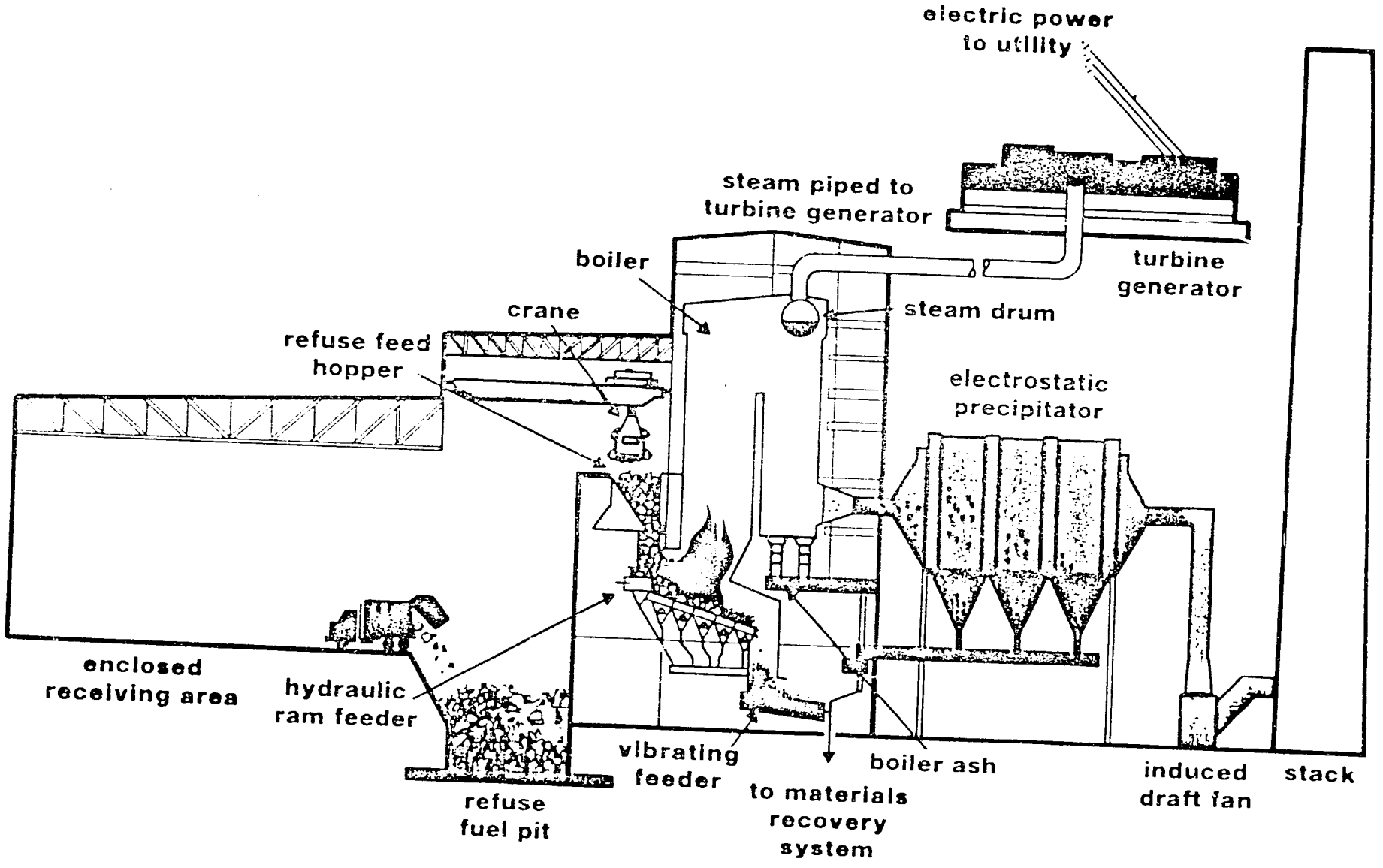

EXHIBIT 5.11

COMBUSTION SYSTEM SCHEMATIC
SOURCE: MARTIN CO.

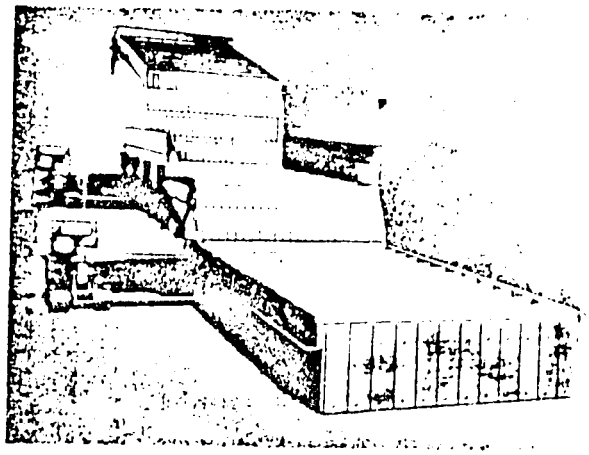

Reciprocating Grates

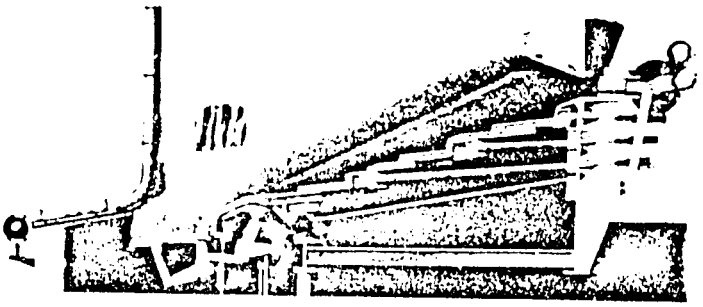

Rotary Grate

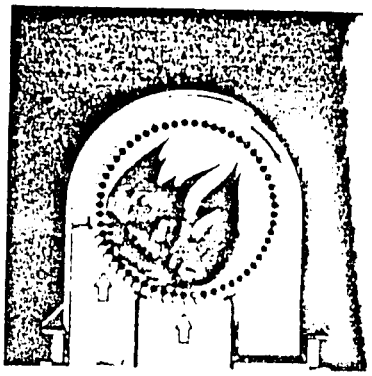

EXHIBIT 5.12

GRATE DESIGNS
SOURCE: DETROIT STOKER, INC.

progresses it combusts, often in a fan-injected air stream. Ash collects at the far end and underneath the grates, from where conveyors carry it away. The hot gases produced by the combustion process rise into the boiler section of the incinerator and produce steam. These gases, now slightly cooled, precipitate more ash prior to entering (in many cases) an electrostatic precipitator which removes nearly all remaining particulate matter. The cleaned gases then pass up and out of a stack, aided by an induced draft fan. See Exhibit 5.11.

There are a great variety of stoker and grate designs that are commercially available. Their performance records vary widely, and grates are often one of the most significant maintenance and replacement items in an incineration system. Grate systems have many of their moving parts in contact with the combusting refuse and thus are susceptible to clinker and slag formation in inconvenient places. Most grate systems are specialized and sophisticated enough to be patented. See Exhibit 5.12 for examples of available grate systems.

Combustion air, if drawn from the tipping floor area, keeps that area under negative pressure and prevents odors from migrating elsewhere to annoy neighbors.

The electrostatic precipitators that are often used to remove particulates from the flue gas are extremely temperature sensitive, having both a high temperature limit above which the unit will not function, and a low-limit, below which the corrosive chemical components of the flue gas will condense and damage the precipitator. Care must be taken, when designing and operating the plant, to correctly size the incinerator's boiler section and air flows to reduce the temperature of the flue gases to an acceptable level.

5.3.6 System Sizing

System size influences technology choice to a large extent, as well as affecting financing approaches and administrative structures for solid waste

management. The following factors need to be considered in determining facility size: quantity of waste available, requirements of the energy market, desired system redundancy, planned operating schedule, and variations in waste generation.

Quality of Waste Available: This is the limiting factor. Generally the plant should be sized to accomodate all of the processible waste generated in its service area.

Energy Market: Plants producing steam may be constrained by the size of the local market for their product. Electricity producing plants are less likely to face this constraint since electricity is more easily transmitted to distant users than steam. Areas with marginal steam markets should consider the alternative of cogenerating steam and electricity to better match plant size to energy markets.

Redundancy: The energy market may demand redundancy in the form of multiple boilers in order to guarantee a steady, reliable source of steam or electricity. Waste disposal needs may also dictate a certain degree of redundancy if there is limited space available to store refuse prior to incineration.

Operating schedule: A system that operates only 5 day per week has less need for redundancy because routine maintenance can be done during the off days. Round-the-clock, seven-days-per-week systems require multiple incinerators in order to allow for periodic maintenance without interrupting the waste disposal/energy production process.

Seasonality: The quantity of processible waste varies temporally, and plants should be sized to handle peak rather than average waste quantities. They should also be designed to function efficiently at a part load of 90% or even less of the rated load.

5.3.7 Operational Considerations

A municipal solid waste incinerator burns a feedstock that varies greatly

in particle size, combustibility and ease of handling. The nature of this feedstock affects both the operating and maintenance needs of an incineration plant. Three major operational considerations must be mentioned: combustion control, operating schedule and component replacement.

Ideally, waste remains in the furnace just long enough to completely combust. If the waste is conveyed through the furnace area too quickly, then combustion will not have finished, volume reduction of the waste will not be adequate, and the waste will have retained some of its noxious characteristics. Too slow a transit of waste through the furnace area is an underutilization of expensive plant capacity. Controlling the rate of travel of the waste, which is not homogeneous, through the combustion chambers to produce a homogeneously burned ash is a difficult task. Successful combustion control depends on several factors. First, the waste must be broken up or pre-processed to provide at least a marginal homogeneity of particle size. Second, the grate system must allow for variable feedstock travel rates. Third, it must be feasible to conduct frequent visual or remote electronic inspections of the combustion area to identify slow-burning items.

Municipal solid waste often has a large incombustible component. These incombustibles collect inside the incinerator and interfere with proper grate operation, heat recovery and ash disposal. Incinerators require regular cleaning in order to function properly, and most large scale mass burn facilities need to be shut down once each week for this reason. Multiple combustion units will be necessary if the plant is to operate continuously.

Even with proper maintenance, the handling and combustion iof waste imposes severe wear on many parts of the facility. The components most subject to failure are those that move while in contact with the waste. Pre-processing machinery, including rotating trommel, reciprocating shredders, and waste conveyors all experience high failure rates. In the combustion chamber, the

travelling grate system, whether it is a reciprocating grate, a rotary grate or a track conveyor, experiences regular failures. These failures must be planned for because they are inevitable. Parts that are likely to fail should be easily replaceable during normal maintenance times, and should be simple to find or to fabricate. Successful operation of the facility depends on designing this flexibility into the plant initially.

5.4 ENVIRONMENTAL IMPACTS

Each proposed project alternative should be evaluated in terms of its likely environmental impacts. Environmental effects have importance for political, economic, health, and aesthetic reasons. A formal study is a requisite part of good project planning. In many locations, strict emissions standards have been legislated. A municipal solid waste incineration facility is likely to have many of the following types of environmental impacts:

- Reduction in area of land required for landfill operation;
- Reduction in disease vector population associated with landfills or open rubbish disposal;
- Reduction in the use of fossil fuels for steam and/or electricity production;
- Increase in air pollutant emissions from incinerator operations;
- Increase in air pollutant emissions from collection vehicles;
- Increase in demand on water supply system; and
- Increase in wastewater discharges;
- Increase in temperature of water used for process cooling; large groundwater or surface water quantities are involved.
- Increase in vehicular traffic along transportation corridors.
- Increase in noise levels along transportation corridors.

Many of the adverse impacts can be mitigated by making suitable design choices. For example, air pollutant emissions resulting from combustion can be controlled by obtaining high furnace temperatures which encourage complete combustion of noxious gases followed by electrostatic precipitators which remove airborne particulates. Currently, electrostatic precipitators (ESPs) are being used successfully to control the amount of particulate emissions discharged to the atmosphere, although control of gaseous emissions is not accomplished unless the gases happen to be absorbed on the captured particulate. Attempts at using wet scrubbers for removal of both particulates and gaseous emissions

have been largely unsuccessful, as scrubbers are not designed to capture the small-size particulates commonly found in the flue gas. Several European installations are utilizing both ESPs and wet scrubbers to remove these two types of emissions (this is a requirement in West Germany). Questions as to the adequacy of current devices to remove potentially hazardous emissions from the combustion of wastes are just now being posed.

For smaller, lower temperature incinerators, baghouses have been employed to reduce the level of particulates emissions. Baghouses consist of a series of woven fabric filter bags. The flue gases pass through these filter bags, which are periodically cleaned by automatic shaking or reverse pulsing of collected particulates to an ash hopper for disposal. In the past, baghouses have not found extensive use in incineration applications due to filter material limitations at high gas temperatures. The development of new temperature resistant fabrics for baghouse applications have increased their applicability to incineration. Waterwall incinerators utilize less draft air and burn at higher temperatures than refractory brick incinerators and consequently pollute less per unit of input. Odor and dust control on the tipping room floor and elsewhere can be accomplished by maintaining those areas under slightly negative air pressure.

Thermal pollution of the cooling water supply can be minimized by productively utilizing as much as possible of the energy generated by the incinerator and by using air-cooled condensors.

Proper siting and plant layout can minimize the effect of increased vehicular traffic on other road users, as can ensuring that the plant is located in an area having few nearby neighbors.

Significant adverse environmental impacts must be mitigated, or the part of the population being adversely affected will seek their own political solutions, which may include shutting down the plant.

5.5 SPECIAL CONSIDERATIONS IN THE EGYPTIAN CONTENT

The viability of municipal solid waste incineration technologies in Egypt is dependent upon four factors: the public infrastructure; waste availability; industrial development; and experience. The success of an implementation program in Egypt is contingent upon the degree of development of each of these.

5.5.1 Public Infrastructure

The necessary public infrastructure for MSW technologies would include a reliable collection and transportation system to gather municipal solid wastes and transport them to the plant site. In Egypt, with population and transportation development heavily concentrated along the Nile River Valley, the collection and transportation of municipal solid wastes would not appear to be a major difficulty. Detailed investigation would be necessary to determine further requirements.

The collection, transportation, and disposal of municipal waste in urban Egypt is primarily in the hands of private enterprise. Within a given territory, entrepreneurs collect rubbish, scavenge all of the valuable or recyclable items and dispose of the residue in the most convenient way possible. This means that residue is rarely disposed of in a sanitary, aesthetically acceptable manner and that rubbish collection is conducted unevenly. In Cairo, a centrally planned approach to coordinating private rubbish collection with final disposal by a public agency is underway. The development of a successful arrangement for accomplishing this is a necessary prerequisite for constructing a municipal solid waste incineration plant.

Another element of the public infrastructrure which bears mentioning is the power system. This system can be divided into the generation and the distribution systems. The success of certain MSW cogeneration technologies is dependent upon access to the utility grid, so that cogenerated power may be

exported to the grid. With a developed distribution network, cogenerators will be able to interconnect with the grid and provide both energy and capacity to the utility.

In many parts of Egypt, the electric grid is still under construction. Design specifications resulting in a robust electric system capable of handling multiple small power producers can still be established. Such a system will interface easily with future MSW-to-energy facilities. If connection of an energy recovery facility to the electric grid is infeasible, it may be appropriate to make the plant a dedicated facility, serving a single nearby user such as a sewage or water treatment plant, a pumping station or an industrial user.

5.5.2 Waste Availability

The availability of waste in Egypt is the second of the four conditions essential for incineration technology development. Because of the current rubbish collection infrastructure, the waste already undergoes a great deal of recycling or preprocessing making it likely that the waste has a high organic component and good combustibility. However, it may also have a high moisture content which would necessitate drying prior to incineration.

5.5.3 Industrial Development

The third condition necessary for successful municipal solid waste incineration technology development in Egypt is a level of industrial development capable of utilizing the steam, heat, and power that can be provided by these technologies. Egypt's largest energy consuming industries are: metals; building materials; chemicals; textiles; and small scale industry. It is estimated that these industries will account for nearly 78 percent of total industrial energy use in 1985. All of these industries could benefit from steam generated from municipal solid waste incineration.

A particular advantage of solid waste-fired steam is that it can displace the use of electricity in the commercial and industrial sectors. In Egypt, where total energy consumption is projected to increase at six percent per year, electric demand growth is projected at 9.9 percent per year. The displacement of electric energy with solid waste derived energy can reduce the necessary investment in high cost, capital intensive electric capacity.

5.5.4 Experience

The final condition for municipal solid waste incineration technology development is experience. With little direct experience with the design, construction, and operation of these technologies, Egypt would be initially dependent on foreign expertise. Although additional activity would be required in municipal solid waste collection and processing, Egypt appears to have the basic requirements for the use of municipal solid waste incineration technologies.

Whether the economics of municipal solid waste incineration technologies can compete with existing fossil fuel-fired systems remains to be determined. Installed capital costs for these systems is dependent upon the technology, preprocessing equipment, system size, site specific requirements, and many other factors. In favorable circumstances, municipal solid waste conversion systems can be installed for $20,000/TPD but can easily cost $150,000/TPD and more. The economics of these technologies in Egypt can only be determined after site specific analyses.

Internationally, there is a growing inventory of municipal solid waste conversion systems. The majority of these systems are in Europe, Japan, and the United States. As of 1983, there were 368 systems installed worldwide, of which 212 are European and 85 are Japanese. Exhibit 5.13 lists the systems by country.

EXHIBIT 5.13

SUMMARY OF WORLDWIDE INVENTORY OF
WASTE TO ENERGY SYSTEMS

Country	No. of Systems	Installed Capacity (Ton/Day)
Australia	1	520
Austria	2	1,320
Belgium	2	1,048
Brazil	2	660
Canada	3	2,800
Czechoslovakia	1	864
Denmark	35	6,348
Finland	2	640
France	26	11,858
Germany, FGR	39	23,389
Hong Kong	3	3,216
Hungary	1	1,440
Italy	24	9,997
Japan	85	44,581
Luxembourg	2	600
Monaco	1	280
Netherlands	6	8,637
Norway	8	206
Singapore	1	1,440
Spain	4	1,158
Sweden	24	5,456
Switzerland	26	7,600
United Kingdom	9	4,624
United States	55	34,870
U.S.S.R.	6	5,032
TOTAL	368	178,584

5.6 CURRENT R&D THRUSTS

5.6.1 Industry R&D

Municipal solid waste-to-energy conversion technologies have been in existence for over 50 years. The technological sophistication of these systems has increased dramatically over this time period, particularly in the last 15 years.

The combustion of municipal solid wastes in large waterwall incinerators and in small-scale modular systems are the most technologically developed technologies to date. Although these technologies have reached commercialization worldwide and others are emerging, research is still being conducted to minimize emissions and improve system economics. Research at a more basic level is underway on other MSW-to-energy conversion technologies, including biochemical processes, thermochemical processes, and refuse-derived fuel preparation.

Most of the development progress in industry has come from improvements in plant design based on actual operating experience in commercial waste processing facilities. Some in-house research is also being conducted. For example, vendors of modular combustion systems for energy recovery from municipal waste or manufacturers of key components for such systems have internally funded R&D activities. Mechanical testing has been conducted on the feed mechanisms, grates, and ash handling systems for such modular combustion systems.

5.6.2 U.S. Government R&D

Research on MSW-to-energy conversion is coordinated by the Biofuels and Municipal Waste Technology Division (BMWT) of the U.S Deparment of Energy. Their mission is to conduct research in energy from municipal waste that will allow the private sector to complete the development necessary for the commercial application of these technologies in the marketplace.

BMWT conducts research activities in the following areas: liquid and gaseous fuels, thermochemical processes, biochemical processes, base environmental concerns, materials, feedstock preparation, and technology tranfer activities.

5.6.2.1 DOE Technology Transfer

The objective of this BMWT effort is to obtain accurate and usable technical data resulting from government-funded R&D and to make it available to the private sector, technical and research communities, educators, A/E's, and policymakers.

5.6.2.2 DOE Liquid and Gaseous Fuels Research

Research efforts that are part of this program are aimed at the conversion of municipal solid waste (MSW) into useful liquid and gaseous fuels. The primary methods under consideration are thermochemical conversion processes. Heat and reduced oxygen availability are used to convert waste to liquids or gases. Included is research to integrate the production of the liquids and gases with various systems to upgrade the product to meet specifications of existing fuel distribution systems. Specific projects include:

- Basic mechanisms of Pyrolysis of Municipal Solid Waste;
- External Combustor Research; and
- Pyrolysis of Municipal Waste in a Coke Oven.

Pyrolysis of municipal solid waste is claimed to have the potential to recover energy in forms other than steam, in particular liquid and gaseous fuels. Unfortunately, the heating values of the products from the potential pyrolysis processes thus far developed have been inferior and, therefore, the processes have not become commercial. Before commercial processes that provide for improved products, better yields, and process optimization can be developed, more information about the basic mechanisms of municipal solid waste pyrolysis is needed. Research facilities where the pyrolytic characteristics of biomass

have been previously examined will be used to study municipal solid waste pyrolysis. Parametric test runs involving variations in temperature, pressure reducing environment, heating rate, and residence time, will be run and the resulting pyrolysis products measured. The use of naturally occurring additives to improve heating value of the liquid products will be investigated. Expected results include information required for the design of a pyrolysis process that yields superior products.

External Combustor Research examines the feasibility of integrating a municipal solid waste combustor and a conventional coal-fired boiler system. It evaluates the concept of combining a modular, mass-burning waste combustor operating at substoichiometric conditions with an existing coal-fired boiler steam plant. The Department of Energy is currently funding research to conduct preliminary test burns to evaluate the feasibility of pyrolyzing minimally processed MSW refuse-derived-fuel and sewage sludge in an inactive coke oven in southeastern Pennsylvania. These tests represent the first time coke ovens have been used to pyrolyze municipal solid waste. This is especially important at this time since with the steady decline of the steel industry, many coke oven facilities have been abandoned.

5.6.2.3 DOE Biochemical Research

Processes which use living organisms to convert organics into useful energy forms are in developmental stages. The BMWT Division is sponsoring development of an anaerobic digestion process that converts the organics in municipal waste to methane under controlled conditions. This process is at the proof-of-concept stage. Another approach involves enzymatic hydrolysis to produce glucose for fermentation to alcohol or digestion to methane. A third process at the early stages of research will convert waste to low molecular weight organic acids biochemically, and would use physical processes to convert

the acid to liquid fuels.

Anaerobic research includes the development of improved microbial strains for anaerobic digestion of municipal solid waste and wastewater. Genetic-manipulation techniques will be used in order to select, and develop improved microbial strains capable of fermenting solid waste-and wastewater-feedstock in anaerobic digesters and producing higher rates (higher volume in shorter retention time) of methane than the conventional microbial systems yield.

Research on processing high solid-waste concentrations by anaerobic digesters for methane production is also being conducted. Its objective is the investigation of innovative and efficient digester concepts for the processing of high (10-25% solids) solids concentration feedstock.

Research is also being done on feed injection to anaerobic digesters for methane production. The purpose of this investigation is the identification of efficient methods for injecting feed to anaerobic digesters producing methane from municipal solid wastes. Bioconversion of waste and recovery of the short-chain organic acids is also being studied. The purpose of this research is the microbial conversion of waste to low molecular weight organic acids and the recovery of these acids to be used for hydrocarbon-fuels production.

The work will provide an understanding of saccharification and acidogenesis pathways utilized by the various microbes present in the substrate, as well as determining the key parameters that have to be manipulated for high yields of short-chain organic acids. Furthermore, it will develop an efficient and economic recovery system for acids produced, and study the marketability of this technology for hydrocarbon fuel generation.

5.6.2.4 Base Research

Included in this BMWT program are environmental, materials, and feedstock preparation research. Environmental efforts are aimed at the characterization,

6.0 ENERGY APPLICATIONS

Municipal solid waste incinerators produce energy in the form of steam which has a variety of uses. Medium pressure steam may be used for industrial process heating or district heating and cooling, while high pressure steam can be fed through a turbine for conversion to electricity.

Anaerobic digesters produce a combustible gas that may be used to fire boilers or engines to produce thermal energy or mechanical energy, which may in turn be converted to electrical energy.

Revenue accruing from the sale of energy produced by waste incinerators or anaerobic digesters is always a secondary justification for undertaking such a project. This revenue improves the economic viability of technologies whose primary purpose is to dispose of waste in a safe, aesthetic, responsible, and cost-effective manner.

6.1 THERMAL APPLICATIONS

There are many applications in which heat can be utilized directly, without first being converted to electricity. Examples of such applications include heating and cooling of buildings, industrial process heating, drying and processing of agricultural products, and desalination.

It is important to compare the energy use requirements of a particular application with the available energy supply. Careful matching of temperature, pressure, and flow characteristics is a prerequisite for both the technical success and economic viability of every project.

Types and Number of Loads: Each application, whether space or water heating, agricultural or industrial process heating, refrigeration, or desalination, has unique load characteristics. Often the steam can serve multiple applications simultaneously in either parallel or a cascaded (series) configuration. The cascaded configuration, serving multiple applications with

different temperature requirements, is usually preferable because it allows the most complete utilization of the available heat via a series of processes.

Proximity: Steam cannot be practically transported a distance greater than 3 km from its generation source because of thermal losses in the transmission piping. Thus, process heat consumers must be located relatively near the boiler supplying the steam; these consumers need to be identified during the initial stages of project planning in order to justify a financial commitment to the facility.

Temporal Fluctuation: The relative difference between the peak use and the average use of heat in a particular process is important in matching a boiler to its load. With multiple applications, the different processes usually will not have simultaneous peaks; thus, a diversity factor will be needed to estimate the overall peak load faced by the plant.

6.1.1 Space Conditioning

Buildings consume a great deal of energy for space heating and cooling, and domestic water heating.

A steam space heating system can serve a single building or, via a district heating network, many buildings. In either case the actual heating is done in one of two ways, either via a forced air system or a hydronic system. (Exhibit 6.1).

Forced air systems use fans to move air through ducts to the space being conditioned. The air is heated by means of an air-to-air heat exchanger, in the case of a furnace, or a water-to-air heating coil, in the case of steam or hot water systems. Steam can be used either directly in the heating coil or indirectly as the primary heat source for an isolated steam or hot water loop which serves a forced air system.

Hydronic systems use steam-heated, pumped, hot water to distribute to the room via fin-tube radiators, convectors, or radiant floor or ceiling

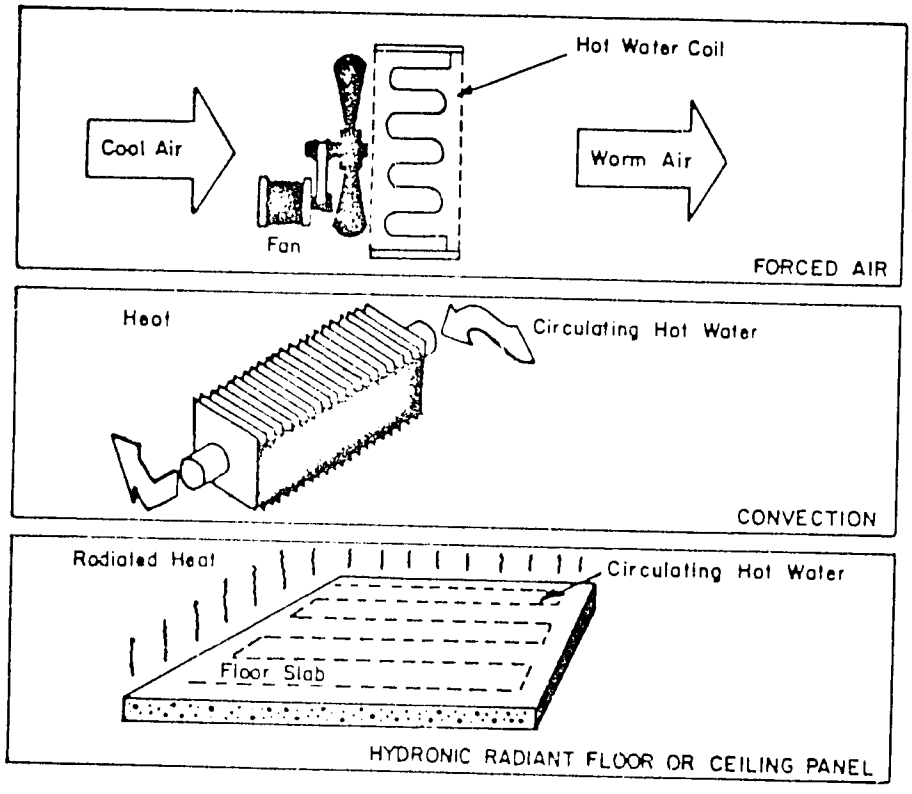

EXHIBIT 6.1

SPACE HEATING SYSTEMS
SOURCE: GEOTHERMAL RESOURCES COUNCIL, 1979

panels.

Domestic hot water heaters utilize steam-to-domestic-water heat exchangers to produce hot water at temperatures in the neighborhood of 50°C. This can comprise a significant fraction of a building's energy consumption (15%), depending on the characteristics of the building occupants.

Cooling of buildings can be accomplished using systems that are similar to those used for heating, either forced air or pumped water. Forced air systems condition air by moving it past cooling coils containing either low temperature refrigerant or chilled water, while pumped water systems utilize chilled water exclusively.

Chilled water for space cooling can be produced using fairly high temperature steam (> 125°C) to operate an absorption chiller. The most efficient lithium-bromide absorption chillers are two-stage units requiring input temperatures of at least 160°C and having a coefficient of performance (COP) of about 1.1.

6.1.2 Industrial Processes and Agricultural Applications

This category covers a variety of applications with different temperature requirements (Exhibit 6.2). Good process designs focus on efficiency considerations, which often imply a cascading arrangement. Applications with complementary thermal requirements can be matched to make efficient and economic use of the thermal resource.

Specific applications likely to be found in Egypt include the production of masonry construction materials such as cement, bricks, and tiles; agricultural processing such as sugar cane evaporation; and food processing applications including drying and canning.

Masonry Construction Materials: Cement, brick, and tile are all produced wet and must be dried before use. Traditional sun drying is not practical in

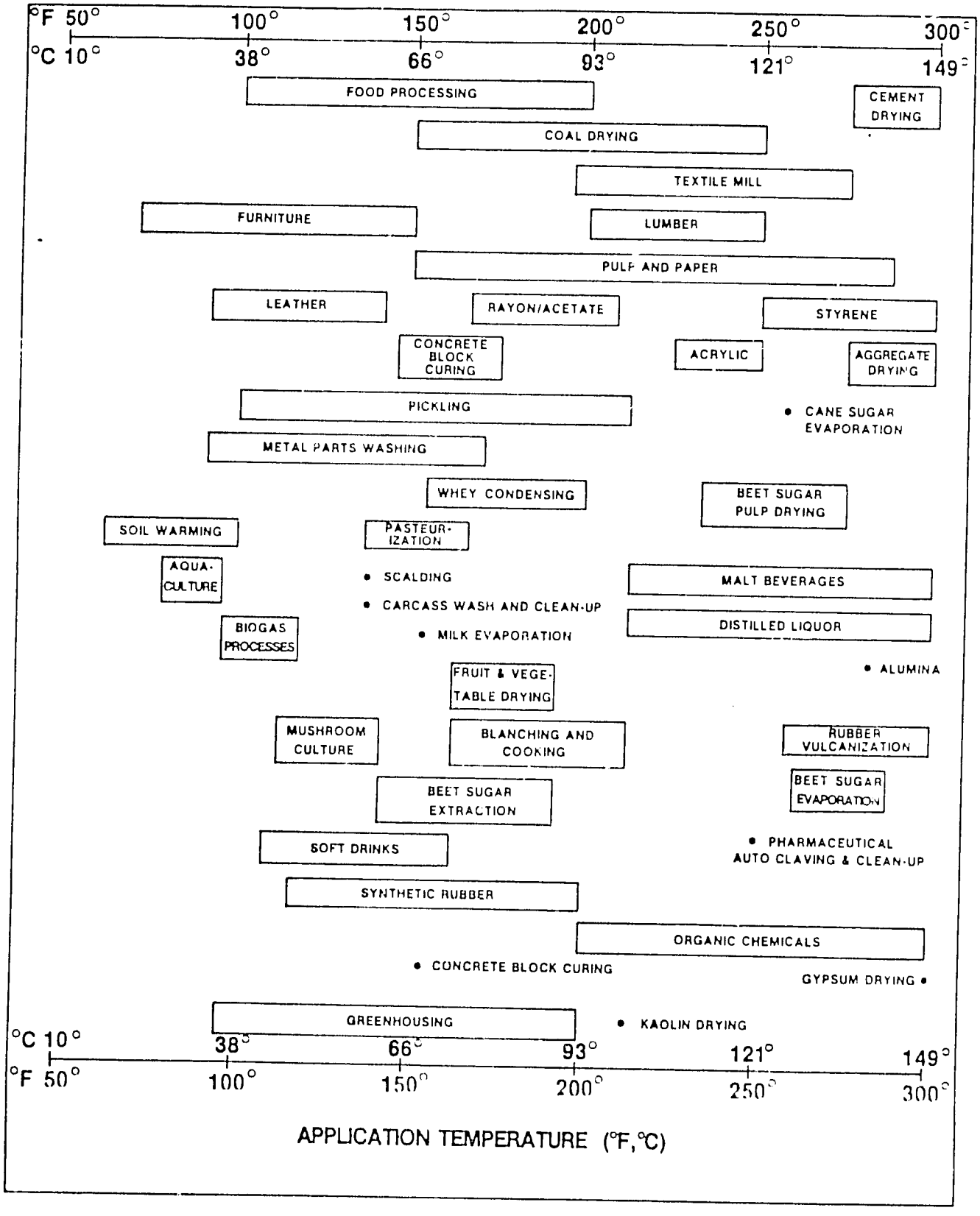

EXHIBIT 6.2

APPLICATIONS TEMPERATURE RANGES FOR
SOME INDUSTRIAL PROCESS AND AGRICULTURAL APPLICATIONS
SOURCE: GEOTHERMAL RESOURCES COUNCIL, 1979

crowded areas, nor does it provide even results compared to drying in a more controlled environment. Drying some of these materials requires input temperatures of 120°C.

Curing of cement blocks and slabs in forms is a lower-temperature application, normally done at about 70°C. Washing of forms can be done by cascading the effluent from the curing process.

Sugar Cane Evaporation: Cane sugar is one of Egypt's most common agricultural products requiring heat processing before use. Excess water in the cane must be driven off in order to make sugar. This requires process temperatures of about 120°C. Most frequently, the evaporator will operate as a batch process in which a quantity of product is introduced and maintained at the given temperature for a period of time.

Food Processing: Many operations can be included under the general category of food processing. Among those requiring process heat are pre-heating, washing, cooking, blanching, peeling, evaporating, sterilizing, distilling, separating, and refrigeration. These operations can often be cascaded. Other uses include meatpacking, poultry dressing, canning, bottle washing, preparation of fruits and vegetables, and drying of grains and other food products.

Cooling above the freezing point of water can be done by using the lithium-bromide absorption refrigeration system. Freezing below 0°C requires the use of an ammonia-based absorption system. Both absorption cycles lend themselves more readily to the larger commercial installations than to the single residential dwelling.

6.1.3 Desalination

Steam produced by an incineration plant or biogas generated by an anaerobic digester may be used as the heat source in a distillation process to produce potable desalinized water. A number of distillation processes are suitable for

use with such a resource, including multi-stage flash evaporation, vertical tube evaporation, and vapor-compressor distillation.

6.2 MECHANICAL APPLICATIONS

The thermal energy generated by combusting biogas or municipal solid wastes can be converted to mechanical energy in engines or turbines (See Section 3.3.4). This shaft power has a variety of potential uses.

Often the plant generating this energy has mechanical power needs for related processes. For example, sewage treatment plants consume large amounts of mechanical energy for pumping of sludge and effluents, and for centrifuging sludges. These can be powered by biogas-driven engines rather than traditional electrical motors.

Farms require mechanical power for irrigation pumping and motive power for vehicles. Both can serve by biogas-fueled engines.

Shaft power can also be used to drive an electrical generator, as the next section describes.

6.3 ELECTRICITY GENERATION

If no market for thermal energy is located adjacent to the energy recovery plant it may be preferable to use the thermal energy generated to produce electricity. Electricity is highly marketable: it has myriad uses and can be transmitted over large distances. Economic generation of electricity requires careful analysis of several market-related factors, the first of which is availability. For example, a municipal waste incinerator's schedule is governed primarily by the delivery schedule of garbage. It is rarely feasible to stockpile more than a few days of fuel for the incinerator. If the plant will be used to generate power remote from the electric grid, then the schedule of operation of the incinerator must coincide with desired schedule of use of electricity. If, alternatively, the plant will tie in with the electric grid, it will contribute

base-load capacity to the existing network, which is generally valued less than intermediate or peak loading capacity.

Another important decision variable is quality of supply. Remote or dedicated electric power production applications generally require lower quality power than grid-connected applications. Lower quality power is less expensive and easier to produce than high quality power meeting precise frequency, voltage and reactive energy specifications.

6.4 COGENERATION

The term "cogeneration" means that the waste heat from a boiler or an engine is used (sometines supplemented by additional fuel) to satisfy some further heating requirement instead of being immediately discharged to the environment. Designing for optimum heat recovery starts with the selection of the prime mover, since the different types of engines yield different amounts of waste heat by virtue of differences in efficiency and ease with which waste heat streams can be captured. a highly inefficient engine may produce substantial recoverable heat at the expense of reduced power output, but this allocation of energy may be desirable for site applications where the thermal load is much higher than the electrical load.

Cogeneration occurs in "topping" and "bottoming" cycles as shown in Exhibit 6.3. The "topping" cogeneration concept is to burn fuel in an engine to produce shaft horsepower for any desired electromechanical workload, then recover engine waste heat to do further work. The most versatile application of the rotating shaft is to drive a generator for electricity production, but direct shaft drive of other machinery might be preferable in certain situations. "Bottoming" cogeneration involves producing heat directly from fuel, as in an MSW incinerator, for example, then capturing very high temperature process exhaust to generate electricity, usually with a waste heat boiler and steam

turbine. The biogas application discussed here is a topping cycle while most municipal solid waste incinerator application will be bottoming cycles. Cogeneration is most attractive at sites with concurrent and continuous demands for electricity and heat.

For topping cycles, once the ratio of power to he s determined by engine selection, the actual use of the heat will guide the design of heat exchange or recovery equipment. Waste heat will be available as a gas (the engine exhaust) and a liquid (engine coolant), and the ultimate use of the heat may require transfer to other gases or liquids. In biogas cogeneration systems, it is assumed that digester heating takes priority among possible applications of engine waste heat. Space and water heating are common secondary uses of the available thermal energy. An incinerator cogeneration system incorporates a turbine generator at the end of a waste-to-energy boiler. In order to produce electricity, high-temperature, high-pressure steam is required to turn the turbine. Hence, refractory systems are not typically considered. The preferred systems for electricity generation are the RDF and waterwall systems. Modular systems have also been used to provide steam for power generation.

Cogeneration systems allow greater flexibility of energy production than either steam-only or electricity-only systems. The choice of a specific configuration for cogeneration can only be made on a plant-by-plant basis.

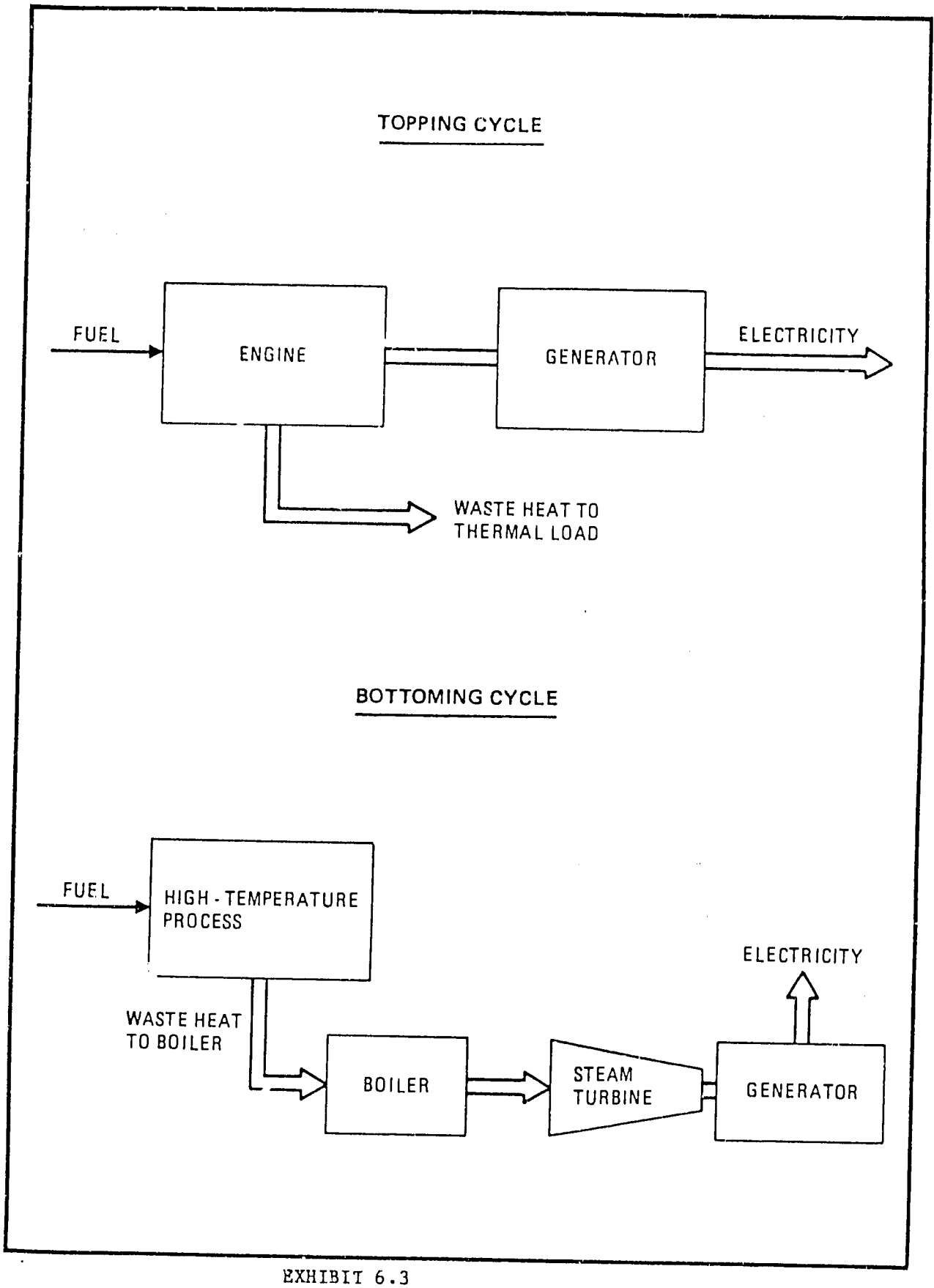

EXHIBIT 6.3

TOPPING AND BOTTOMING COGENERATION SYSTEMS
SOURCE: TVA, 1981

7.0 ECONOMIC ANALYSIS

This section establishes a means for initially evaluating the economic feasibility of a resource recovery alternative and determining its costs. A feasibility analysis should include comparisons to alternative resource disposal/utilization technologies.

Analysis of on-farm digesters differs from sewage plant digesters in several important ways. On-farm digesters are usually much smaller in scale, and they are often private rather than public investments.

In many applications, neither the raw manure, the digested sludge or energy produced will enter local markets. Everything instead will be utilized on the farm. Although no money actually changes hands, the economic analysis is still a useful tool for determining where an initial expenditure on a biogas digester is justifiable.

For each alternative, the analysis procedure includes the following components, which are discussed in more detail below:

- System size and degree of energy recovery;
- Estimation or capital costs;
- Estimation of annual costs;
- Estimation of revenues;
- Life-cycle costing;
- Sensitivity analysis.

7.1 SYSTEM SIZE AND DEGREE OF ENERGY RECOVERY

Determining the size of the energy recovery system is an important first step in developing system costs.

The choice of anaerobic digestion as the means of sludge/manure stabilization, or of incineration for municipal solid waste reduction, does not automatically establish the degree of energy recovery that should be planned.

The energy gas that is generated can be used for process heating, or as fuel to provide mechanical or electrical power at the plant. It can be scrubbed/conditioned and sold to outside consumers, or used to produce electricity for outside consumption. Each of these options has different costs and benefits associated with it, and the size and nature of the energy recovery system should be determined following analysis of all of the options. Important variables include:

- quantity of raw feedstock available;
- quantity of energy generated/quantity of residue generated;
- plant thermal energy requirements;
- plant mechanical and electrical power requirements;
- requirements of the local energy market;
- requirements of the local fertilizer market (for anaerobic digesters);
- degree of automation, monitoring and control desired
- degree of system redundancy desired; and
- seasonal variations in feedstock supplies.

7.2 ESTIMATION OF CAPITAL COSTS

The base capital costs include land, site development, buildings and equipment, engineering and legal fees, and plant start-up and shakedown. Financing during construction should be included elsewhere in the debt service calculations, along with further escalation to reflect the impact of inflation on construction costs prior to ground breaking.

In the U.S., a large scale, modern, mass-burn waste incinerator with energy recovery costs roughly $125,000 to build per ton of waste processing capacity. Anaerobic digestion systems cost roughly $400 per cubic meter of sludge digestion capacity. See the visit books in Appendices A and B for costs associated with specific projects.

7.3 ESTIMATION OF ANNUAL COSTS

In addition to the initial capital cost of an energy recovery facility, the annual operating costs must be determined. They can be broken down into two areas:

- Annualized capital costs or debt service; and
- Operating and Maintenance (O&M) costs.

Annualized capital costs consist of interest payments on borrowed capital and the payback of that capital. These costs must be paid whether the plant operates at full capacity or not. The annualized cost of borrowed capital is dependent upon three factors: the financing approach used, the bond interest rate, and the loan term. The interest rate used for this analysis should reflect the current rate obtainable for similarly scaled projects. The loan term is based on the expected useful life of the facility, usually considered to be 20 years, and the term of the energy purchase agreement, whichever is shorter.

Annual operating and maintenance (O&M) costs are those costs which are necessary to keep a facility operating. These costs include the following items:

- Labor - dependent upon local wage rates, number of personnel required and type of facility;
- Maintenance - materials and labor used for cleaning, repairs and routine maintenance;
- Auxiliary materials and energy usage - includes chemical, supportive electricity, auxiliary fuel, pumps, test equipment, water needed to operate facility and peripheral equipment, rolling stock;
- Sludge or residue disposal - a function of degree of stabilization, volume reduction and available disposal alternatives;
- Maintenance reserve fund - to cover major maintenance needs, such as the replacement of heat exchangers, pumps, boiler tubes or refractories; and
- Insurance.

7.4 ESTIMATION OF REVENUES

The amount of energy revenues produced by an energy recovery facility is a function of the quantity (and characteristics) of the feedstock that is processed, the degree of beneficial utilization of the stabilized sludge or residue, the type of energy produced (low quality gas, high quality gas, steam or electricity), and the price of energy from competing sources. The price received for the energy sold is usually based on the market's existing energy production costs, often including a discount as an incentive for a long-term contract. Typically, price increases are indexed in some way to that of the fuel displaced by the recovered energy.

7.5 LIFE-CYCLE COSTING

It is common practice in the evaluation of public works projects to assess their economics on the basis of the first year of operation; however, the first year of operation of an energy recovery project is not indicative of its potential economic performance in the future. To be accurate, any evaluation of project feasibility should involve the assessment of facility economics over the planned life of the facility. Such a life-cycle costing methodology involves projecting costs and revenues over the 15 or 20 year planning period based on assumptions about inflation and the rate of escalation of energy revenues, and the cost other competing sludge disposal methodologies.

For a preliminary analysis, it can be assumed that operating and maintenance costs (including labor, parts, utilities, and ultimate sludge or residue disposal) will increase with inflation, although this can be examined in the Sensitivity Analysis (see Section 7.6) if desired.

The escalation rate for energy revenues is more difficult to predict and will depend on how the contract with the energy purchaser is structured. It is usual for such contacts to contain a pricing mechanism which pegs the price of

recovered energy to a conventional fuel, usually the one that is being displaced. It is recommended that local utility projections of annual cost escalation be used wherever possible. The escalation rate used for energy revenues should be the sum of the inflation rate and the real value escalation rate assumed for the analysis.

In order to properly evaluate the municipal solid waste incinerator alternative, it is necessary to determine, for comparison, the life-cycle costs for landfill over the planning period. The captial costs for a landfill include purchase of the land itself, its initial preparations and the purchase of earth-moving equipment. Annual operating costs include the debt service, labor, maintenance, machine fuel, maintenance reserve funds and insurance. Landfill costs can be assumed, conservatively, to escalate at the rate of inflation.

It is often the case that incineration will be more expensive than landfill during the early years of the analysis; however, in most cases, the incineration alternative will become cheaper than landfilling before the end of the planning period. If this occurs before the mid-point of the planning period, then incineration can be considered to have definite potential as a cost-effective solid waste management alternative. If this occurs after the mid-point, then incineration may not be a cost-effective alternative.

7.6 SENSITIVITY ANALYSIS

In developing the economic analysis of the previous section, assumptions based on predictions of the future behavior of the economy were made. As the future is unknown it is necessary to assess the impact that any deviations from the predictions will have on the economics of a project. It is particularly useful to consider "worst case" scenarios in order to focus attention on the inherent risks of resource recovery. "Best case" scenarios are valuable in

that they highlight the need to structure the project so that potential savings/ profits are shared equitably, although they should not be used to raise expectations unreasonably.

The following factors are prime candidates for consideration in sensitivity analysis for resource recovery:

- Debt service;
- Energy revenues;
- Inflation rate;
- O&M cost escalation rate;
- Feedstock quantity; and
- Cost of ultimate sludge or residue disposal.

The debt service payment could be affected by the financing approach used, the interest rate obtainable at the time the bonds are issued, and a greater than anticipated initial capital investment due to cost overruns and the requirement for significant modifications during start-up and shake-down.

The future revenues from the sale of energy could be greater or lower than anticipated due to a number of occurrences. The cost of the energy market's displaced fuel could escalate at a higher or lower rate than expected. The high cost of the displaced fuel could prompt the market to convert to a cheaper energy source. The energy market could go out of business or close the plant using the recovered energy. Poor system reliability could result in less feedstock being processed and less energy being produced and sold. Protection against some of these negative occurrences is available through contractual means, but others represent risks which cannot be avoided.

The principal effect of inflation on the economics of a resource recovery project is on the relative value of the debt service compared with other operating costs and revenues. A low inflation rate will result in the debt service over

the life of the project being higher (in real terms) than anticipated.

The O&M cost of a facility could increase at a faster rate than inflation and/or could be higher than anticipated, due to repeated equipment failures.

A lower than anticipated quantity of feedstock delivered to the facility could also have a significant impact on project economics, since revenue would be significantly reduced without corresponding reductions in debt service and, to a lesser degree, O&M costs.

The ultimate cost of disposing of certain sludges or residues could increase rapidly if biological/heavy metal/toxin contamination occurs to a significant degree, or if open space for land disposal becomes scarce.

The sensitivity analysis should examine those factors which are of particular concern in each individual case. It is useful to examine each factor separately so that its impact on project economics can be judged. "Worst case" and "best cast" scenarios can also be developed where several factors are adjusted at a time.

8.0 PRODUCTS

While many components of biomass energy conversion systems are custom built at the project site, certain types of pre-fabricated equipment are available. This chapter organizes U.S. manufacturers' products and presents them in matrix form. There are separate matrices for Anaerobic Digestion related products and Municipal Solid Waste related products. Products available range from individual components to integrated, turn-key systems.

The information presented here is based on product literature obtained through a mailing to U.S. manufacturers. Only those manufacturers who responded are included in the listing. As such, the information in this chapter is representative of U.S. biomass energy products but it is not all-inclusive.

The actual product literature recieved from the mailing is filed by category in the REFT Project Library. At the end of this chapter are the names and addresses of all of the manufacturers identified in the matrices.

8.1 ANAEROBIC DIGESTION PRODUCTS

MANUFACTURER \ FEATURES	ENGINES	ENGINE GENERATORS	COGENERATORS	INDUCTION GEN.	TURBINE GENERATORS	GAS RECOVERY	PACKAGED ANAEROBIC DIGESTER	DESIGN CONSTRUCTION
CATERPILLAR	●	●						
COGENIC			●					
COMBUSTION ENG.			●					
CUMMINS	●	●	●					
EMPIRE		●	●					
FERMONT		●						
GE			●					●
GENERAC	●	●						
HONDA	●	●						
IDE			●					
KW ENERGY			●		●			
O'BRIEN	●	●						
ONAN		●						
ORMAT					●			
PERENNIAL ENERGY				●		●	●	
PINCOR		●						
SOMMER		●						
STIRLING TECH	●		●					
THERMO / ELECTRON			●	●				
T&J POWERGUARD		●						
WABASH		●						
WAUKESHA	●	●	●					
WESTERN ENGINE	●	●	●		●			
WESTINGHOUSE					●			
JOHN ZINK						●		

8.2 MUNICIPAL SOLID WASTE PRODUCTS

FEATURES / MANUFACTURER	PREPROCESSING						COMBUSTION SYSTEMS			GRATES			DESIGN & CONSTRUCTION
								SITE BUILT					
	CONVEYORS	TROMMELS	SHREDDERS	SEPARATORS	ALUMINUM RECOVERY	MAGNETIC SEPARATORS	MODULAR	REFACTORY	WATERWALL	RECIPROCATING	STOKER	ROTARY	
AMERICAN			●										
AMERICAN REFUEL									●	○			●
BASIC ENGINEERING							●						
BECHTEL													●
BRULE							○						
CLEAVER BROOKS							○						
CONSUMAT							○						
DETROIT STOKER	○									○	●		
DINGS						○							
ECOLAIRE							●						
ECONOTHERM							●						
ERIEZ						○							
FULTON IRON WORKS									○	●			●
GRUENDLER			●										
HEIL	○	●	●										
INTERNATIONAL								●					
JEFFREY / DRESSER			●										
NRT				●	●	●							
O'CONNER COMBUSTOR									○			●	
OGDEN MARTIN									●	●			
SOLID FUEL							●						
STEARNS						●							
UNIVERSAL			●										
VICON RECOVERY							●						
WILLIAMS	○		○										
JOHN ZINK							●						

8.3 MANUFACTURERS' ADDRESSES

BIOMASS MANUFACTURERS

American Pulverizer Company
5540 West Park Avenue
St. Louis, Missouri 63110
Phone: (314) 781-6100

American REF-FUEL Company
14701 St. Mary's Lane
Houston, Texas 77079
Phone: (713) 870-7819
Telex: 794592

Basic Environmental Engineering, Inc.
21W161 Hill Street
Glen Ellyn, Illinois 60137
Phone: (312) 469-5340

Bechtel Power Corporation
15470 Shady Grove Road
Gaithersburg, Maryland 20877-1454
Phone: (301) 258-3000

Brule C.E.&E.
13920 South Western Avenue
Blue Island, Illinois 60406
Phone: (312) 388-7900

Caterpillar
Alban Engine Power, Inc. (distributor)
1401 Cherry Hill Road
Baltimore, Maryland 21225
Phone: (301) 355-6700
Telex: 87-695 ALB ENG CH BAL

Cleaver-Brooks
P.O. Box 421
Milwaukee, Wisconsin 53201
Phone: (414) 962-0100

Cogenic
Energy Systems, Inc.
127 East 64th Street
New York, New York 10021
Phone: (212) 772-7500

Combustion Engineering
Power Systems
1000 Prospect Hill Road
Windsor, Connecticut 06095
Phone: (203) 688-1911

Cummins Engine Company, Inc.
Columbus, Indiana 47202-3005
Phone: (812) 377-5000
Telex: 217411
TWX: 810-352-1278

Detroit Stoker Company
1510 East First Street
P.O. Box 732
Monroe, Michigan 48161
Phone: (313) 241-9500
TWX: (810) 231-7293

Dings Company
Magnetic Group
4740 West Electric Avenue
Milwaukee, Wisconsin 53219
Phone: (414) 672-7830

Ecolaire Combustion Products, Inc.
P.O. Box 240707
11100 Nations Ford Road
Charlotte, North Carolina 28224
Phone: (704) 588-1620
Telex: 572-549

Econotherm
Energy Systems Corporation
P.O. Box 1229
Tulsa, Oklahoma 74101
Phone: (918) 272-5371
TWX: 910-845-2137

Empire Generator Corporation
W190 N11260 Carnegie Drive
Germantown, Wisconsin 53022
Phone: (414) 255-2700
TWX: 910-260-3624

Eriez Magnetics
P.O. Box 10608
Erie, Pennsylvania 16514

Fermont Division
Dynamics Corporation of America
141-T North Avenue
Bridgeport, Connecticut 06608
Phone: (203) 366-5211
Telex: 964365 Fermontexp

Generac
P.O. Box 8
Waukesha, Wisconsin 53187
Phone: (414) 544-4811
Telex: 26-9687

General Electric Company
530 Franklin Street
Schenectady, New York 12345
Phone: (800) 626-2001, ext. 990

Gruendler Crusher,
12955 Maurer Industrial Drive
St. Louis, Missouri 63127
Phone: (314) 849-3700
Telex: 42-047

The Heil Company
Engineered Systems Division, Shredder Group
3000 W. Montana Street
Milwaukee, Wisconsin 53201

Honda Power Products
Cycles Arlington (distributor)
4219 Arlington Boulevard
Arlington, Virginia
Phone: (703) 525-5000

International Allied Associates Corporation
(INTACORP)
(Consumat Distributor)
1940 Harrison Street, Suite 303
P.O. Box 2268
Hollywood, Florida 33022
Phone: (305) 920-5506
Telex: 514468 INTACORP HLWD

International Diesel Electric Company,
Inc. (IDE)
100 Midland Avenue Extension
Middletown, New York 10940
Phone: (914) 342-3994
Telex: 996551

International Incinerators, Inc.
P.O. Box 19
Columbus, Georgia 31902
Phone: (404) 327-5475

Jeffrey Manufacturing Division
Dresser Industries, Inc.
P.O. Box 3080
Greenville, South Carolina 29602

Katy-Seghers Inc.
Fulton Iron Works
3844 Walsh Street
St. Louis, Missouri 63116-3399
Phone: (314) 752-2400
Telex: 44-2381

KW Energy Systems, Inc.
P.O. Box 150/75 Otis Street
Northborough, Massachusetts 01532
Phone: (617) 393-7855

National Recovery Technologies
105 28th Avenue, South
Nashville, Tennessee 37212
Phone: (615) 329-9088

The O'Brien Machinery Company
Green Street & Powerhouse Place
Downingtown, Pennsylvania 19335
Phone: (215) 269-6600
Telex: 835319

O'Connor Combustor Corporation
107 Music City Circle
Suite 101
Nashville, Tennessee 37214
Phone: (615) 883-0078
Telex: 786597

Odgen Martin Systems, Inc.
140 East Ridgewood Avenue
Paramus, New Jersey 07652
Phone: (201) 599-2400

Onan Corporation
1400 73rd Avenue, N.E.
Minneapolis, Minnesota 55432
Phone: (612) 574-5000

Ormat Systems, Inc.
500 Dermody Way
Sparks, Nevada 89431
Phone: (702) 356-9111

Perennial Energy, Inc.
P.O. Box 15
Dora, Missouri 65637
Phone: (417) 261-2204

Pincor Products
11600 West King Street
Franklin Park, Illinois 60131
Phone: (312) 455-3456

Solid Fuels, Inc.
One Salt Creek Lane
Hinsdale, Illinois 60521
Phone: (312) 789-6677

Sommer Electric Company
1432 E. Louis Avenue
Elk Grove Village, Illinois 60007
Phone: (312) 956-1222
Telex: 206562

Stearns Magnetic
6001 South General Avenue
Cudahy, Wisconsin 53110
Phone: (414) 769-8000

Stirling Technology, Inc.
9 Factory Street
Athens, Ohio 45701
Phone: (614) 594-2277

Thermo Electron Corporation
Tecogen Sales and Sales
45 First Avenue
P.O. Box 459
Waltham, Massachusetts 02254
Phone: (617) 890-8700

T & J Manufacturing, Inc.
Foot of Nebraska Street
P.O. Box 200
Oshkosh, Wisconsin 54902-0200
Phone: (414) 231-8217
Telex: 26-0165 (ELECPOWR-OSHK)

Universal Engineering Corporation
800 First Avenue, N.W.
Cedar Rapids, Iowa 52405
Phone: (319) 365-0441
Telex: CRUSHER HQ-CDR 46-4443

Vicon Recovery Systems, Inc.
10 Park Place
P.O. Box 100 Butler Center
Butler, New Jersey 07405
Phone: (201) 492-1776

Wabash Power Equipment Company
444 Carpenter Avenue
Wheeling, Illinois 60090
Phone: (312) 541-5600
Telex: 28-2556

Waukesha Engine Division
Dresser Industries, Inc.
Waukesha, Wisconsin 53187

Western Engine Company
Power Systems Division
750 Route 53
Itasca, Illinois 60143-1392
Phone: (312) 773-5700
TWX: 910-991-1647
Telex: 283-457

Westinghouse Electric Corporation
Combustion Turbine Systems Division
P.O. Box 251
Concordville, Pennsylvania 19331
Phone: (215) 358-4980
Telex: 83412

Williams Patent Crusher &
Pulverizer Company
2701 North Broadway
St. Louis, Missouri 63102
Phone: (314) 621-3348

John Zink Company
4401 South Peoria Avenue
P.O. Box 702220
Tulsa, Oklahoma 74170
Phone: (918) 747-1371
Telex: 497414