ORGANIZATION for
ENERGY
PLANNING

PN-ABA-278
ISN 57020

جهاز تخطيط الطاقة

263-0123.01

ENERGY AUDIT

of the

Alexandria Petroleum Company

Alexandria, Egypt

May, 1988

VOLUME 1 of 2

Produced through the joint engineering effort of:

* ALEXANDRIA PETROLEUM COMPANY (APC)
* FOSTER WHEELER USA CORPORATION (FWUSA)
* ORGANIZATION FOR ENERGY PLANNING (OEP)

O.E.P. تلكس دولى ٢٣٤٠٤ ١ شارع عائشة التيمورية ـ جاردن سيتى ـ القاهرة
1, Aiu El-Taymorya — Garden City, Cairo Phone 355-7113 356-4576 Telex. 23404 O.E.P.

TABLE OF CONTENTS

		Page
	Appendices	ii
	List of Tables	iii
	List of Graphs	iv
	Acknowledgment	v
1.0	EXECUTIVE SUMMARY	1
	1.1 Introduction	1
	1.2 Plant Description	1
	1.3 Findings	5
	1.4 Recommendations	12
2.0	DISCUSSION	21
	2.1 Objectives of the Audit	22
	2.1.1 Identify Where Energy is Used	22
	2.1.2 Identify Energy Conservation Opportunities	23
	2.2 Method of Approach	23
	2.3 Goals and Special Considerations	24
	2.4 Analysis of Energy Consumption	25
	2.4.1 Discussion of Tables	33
	2.4.2 Discussion of Graphs	34
	2.5 Economic Evaluation	36
	2.5.1 Value of Energy Saved	36
	2.5.2 Estimating Investment Cost	37
3.0	ENERGY CONSERVATION OPPORTUNITIES (ECO'S)	39
	3.1 Summary List	9
	3.2 Detailed ECO Presentation	2

Appendices
(Report Volume 2 of 2)

Appendix		
1	BASIC ENGINEERING DATA	
2	PORTABLE INSTRUMENT LIST	
3	ECO-35:	FORM A COMMITTEE TO PLAN AND IMPLEMENT ECO's (Pg. 269-326)
4	ECO-36:	PUBLICITY TO MAKE EMPLOYEES AWARE OF IMPORTANCE OF ENERGY CONSERVATION (Pg. 327-331)
5	ECO-29:	TECHNICAL ARTICLES REFERRING TO POWER FACTOR CORRECTIONS
6	DISCOUNT CASH FLOW GRAPH	
7	ECO-02:	FLARE GAS RECOVERY (SHELL CANADA)
8	ARTICLES ON ENERGY USE IN REFINERIES	
9	ECO-08, 09, 10, 13:	CRUDE UNIT AND VRU UNIT PROCESS FLOW SKETCHES

List of Tables

Table No.	Description	Page
1.4 A	Housekeeping Items - ECO Summary	16
1.4 B	In-Country Investment Items - ECO Summary	17
1.4 C	Foreign Investment Items - ECO Summary	19
1	Monthly Energy Consumption	27
2	Monthly Energy Costs	28
3	Monthly Production, Cost and Energy per Unit	29

List of Graphs

Graph No.	Description	Page
1	Energy Consumed - Atmospheric and Lube	30
2	Energy Cost/Unit - Atmospheric and Lube	31
3	Energy/Unit - Atmospheric and Lube	32

Acknowledgment

This project was carried out with the active support of the Organization for Energy Planning, Cairo, Egypt.

We would like to further thank the management and employees of the Alexandria Petroleum Company for their cooperation and assistance during all phases of the energy audit. Everyone was very friendly and extremely helpful in obtaining the necessary data and information that has become a basis for this report.

We also wish to express our appreciation to USAID for their advice and assistance in expediting the smooth flow of this project. This project was funded under USAID Contract Number PDC 5730-I-00-7021-00, Order No. 1.

1.0 EXECUTIVE SUMMARY

1.1 Introduction

The Organization for Energy Planning, in conjunction with the plant staff of the Alexandria Petroleum Company, and with the technical assistance of Foster Wheeler USA Corporation, have executed an energy audit of the Alexandria Petroleum Company, Alexandria, Egypt. The field audit began in February, 1988, and continued into April, 1988. Analysis of all information was performed in the offices of OEP located in Cairo, Egypt.

The energy audit consisted of a detailed review of the Atmospheric Distillation Complex and Lube Oil Complex and their respective performance. All sections of the units were inspected. Drawings of the processes were reviewed and energy and production data were collected. The energy data has been checked for consistency and accuracy, and supported further by independent field measurements of the necessary process variables.

This report serves to document the consumption of energy, in all its forms, analyze whether this energy is being used efficiently, and, if not, identify opportunities to conserve energy based on quantitative economic analysis.

1.2 Plant Description

The Alexandria Petroleum Company consists of an Atmospheric Distillation Complex and a Lube Oil Processing Complex. A block flow diagram for the APC refinery is at the end of this section.

The Atmospheric Distillation Complex is comprised of the following units:

- Atmospheric Distillation Unit #2
- Atmospheric Distillation Unit #3
- Atmospheric Distillation Unit #4
- Vapor Recovery Unit
- Naphtha Distillation
- Merox Treating
- Sulfolane Unit
- Utilities Section and Boilers

The Lube Oil Complex is comprised of the following units:

- Vacuum Unit
- Propane Deasphalting Unit
- MEK Dewaxing Unit
- Furfural Extraction Unit
- Lube Oil Hydrofinishing Unit
- Wax Hydrotreating Unit
- Hydrogen Plant
- Nitrogen Plant
- Sour Water Stripper
- Utilities Section and Boilers

The Lube Oil Complex receives its feed from Atmospheric Distillation Unit #4.

Three types of crude are run in the Atmospheric Units. The properties and approximate throughputs are given below.

Crude Type	S.G.	°API	Average Throughput Tons/hr	Processing Unit
Alamein	0.821	40.8	154	ADU #2
Morgan	0.859	33.2	203	ADU #3
Belayim	0.877	29.8	217	ADU #4
			574	
			(101,500 BPSD)	

The following products are produced in the Atmospheric Distillation Complex:

Product	1987 Production Rate, Tons
Fuel Gas	8,890
C_4 L.P.G.	61,730
Naphtha	831,881
Solvents	33,484
Kerosene	677,193
Solar	849,356
Fuel Oil	1,853,775

The Lube Oil Complex produces the following products:

Product	1987 Production Rate, Tons
Oils:	75,317
Black Oil	
Spindle Oil	
Waxfree Oil	
Lube Oil	
Asphalt:	234,372
Wax:	3,309
Soft	
Hard	
Waxy Distillates:	118,821
Heavy	
Medium	
Light	

Total losses for the refinery amount to 48,177 tons/year.

At present, the only major modifications being undertaken in the refinery are in the Lube Oil Complex. A new Hydrogen Plant and Hexane Unit, plus modifications to the Vacuum Unit are planned to increase capacity.

Alexandria Petroleum Co.
Block Flow Diagram

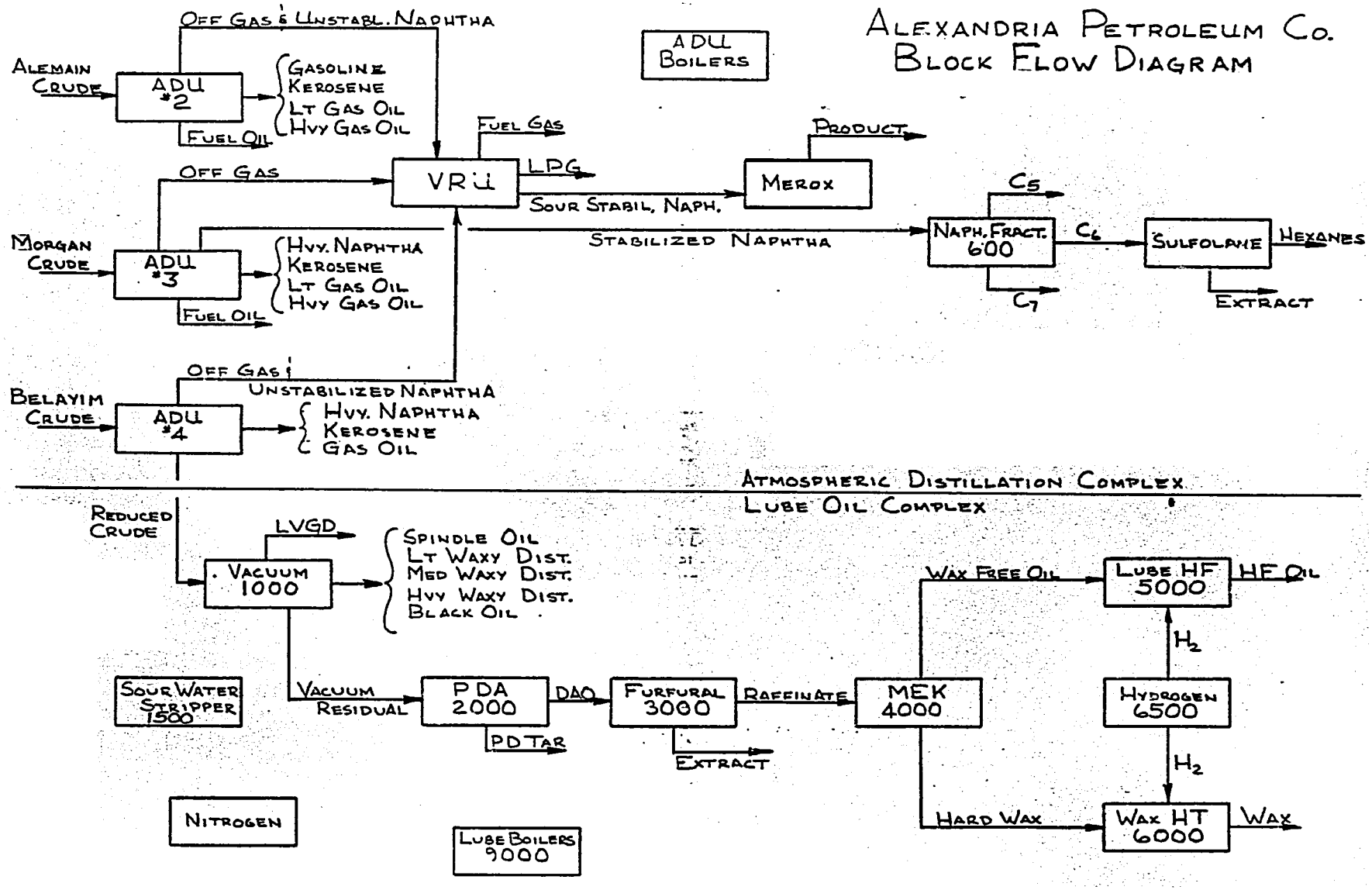

1.3 Findings

The qualitative and quantitative findings at the Alexandria Petroleum Company are below. These findings have been divided into categories deemed most appropriate to this energy audit.

Accuracy of Plant Data

The plant energy consumption data for calendar year 1987 was supplied by the plant from their log sheets, and is the basis for this energy audit. The accuracy of the energy data supplied by the plant was not verified. Any obvious indiscrepencies in this raw data were resolved to the best of our (FWUSA, OEP, APC) abilities.

Energy consumption rates for various pieces of equipment or systems were obtained during the data collection phase of this energy audit. This data was used as a basis for calculating future energy savings for a particular item or system and is not meant to be a check of the 1987 energy data.

Energy

The primary source of energy is No. 6 Fuel Oil. This fuel is used for approximately 88% of the energy consumed in the entire refinery.

Total energy consumption for the refinery averages 6.0×10^{14} joules per month. The average energy consumption per ton of crude oil processed is 1.46×10^{9} joules. This value agrees well with the expected energy consumption of a "typical refinery" of similar complexity.

Depending upon its complexity, a typical U.S. refinery today will normally consume between 4% (1.5×10^{9} joules/ton) and 14% (5.25×10^{9} joules/ton) of the energy contained in the crude that it is processing. A very simple refinery, containing mostly crude and vacuum distillation processes and relatively little additional processing, would be expected to consume a quantity of energy in the region of 4% or approximately 1.5×10^{9} joules/ton. A highly complex refinery containing a full range of catalytic and thermal processes for cracking, reforming and hydroprocessing of the various crude fractions would be expected to consume as much as 14% or approximately 5.25×10^{9} joules/ton.

Based upon an analysis of the refining units presently contained within the Alexandria refinery, we would expect a "typical U.S. refinery" of its complexity to consume 3.9% of the crude processed, or 1.54 x 10^9 joules/ton. One of the reasons why this refinery appears to have such a low energy consumption per ton of crude processed is that only 38% of the total crude of the three crude units is processed in the downstream Vacuum Unit and Lube Oil Complex. Additional factors that lead towards low energy consumption are relaxed product specifications, as compared to international values, and a lack of stringent pollution control standards and facilities.

Pollution and Pollution Control

Only three significant sources of pollution were identified at the Alexandria Petroleum Company, namely, high flare gas emissions, excessive hydrogen sulfide leakage from open sour water headers, and hydrocarbon carryover into the seawater return.

The flare at APC is continually burning vapors that are being fed to the flare system from various locations in the refinery. In general, sources of vapor flow to the flare system are not known. Leaking relief valves, and improper seating of block and vent valves contribute to the flare load. However, a known source at APC is the fuel gas system. Fuel gas that is not consumed by the process heaters or boilers in the various units is vented to the flare. A good maintenance program can minimize the leaks associated with relief valves and block valves. The excessive fuel gas that is relieved to the flare can be recovered; methods to dc so are discussed within this report.

Sour water streams from the ADU fractionator overhead accumulators and the stabilizer overhead accumulator in the VRU are drained to an open sewer by gravity flow. This arrangement results in high hydrogen sulfide emissions being released from the sour water streams. This condition is extremely bad in the VRU.

Utilization of sea water as a cooling medium leads to thermal pollution and hydrocarbon contamination. Thermal pollution is unavoidable when sea water is returned to the local waters. Contamination of the seawater by crude oil

products is also difficult to eliminate, as some traces carry-over from the API separators into the seawater return outlet.

Instrumentation

Overall, the degree of instrumentation found in the refinery is good. Instrumentation in the Lube Oil Complex is much more state-of-the-art than the Atmospheric Distillation Complex, primarily due to the respective ages of the units.

There is, however, room for improvement in the area of instrumentation. In many cases, instrumentation which once functioned properly in both plants is now idle, or in a state of disrepair.

Instrumentation for proper monitoring of energy consumption is lacking in the steam system of the Atmospheric Distillation Complex. Flow indication for total steam production, as well as stripping steam rates, exists but have fallen into a state of disrepair over the course of time. Stripping steam rates are of particular concern, as they affect energy consumption, product properties, and sour water production.

Flow of unused fuel gas to the flare system represents a very large waste of energy and is not measured in either the Atmospheric Distillation Complex or in the Lube Oil Complex. Proper instrumentation will show the potential for energy recovery from these vapors entering the flare system.

Cooling water is another system that lacks sufficient operating instrumentation and/or valves. Total cooling water return temperatures are very low in both complexes due to very high cooling water throughputs. Proper instrumentation and proper use of this instrumentation will lead to lower cooling water circulation rates and therefore lower energy consumption.

Electrical

The plants electrical system consists of 2, 66 kV incoming lines, SF_6 switchgear, 2, 18-25 MVA, 66 - 11 kV (minimum oil) switchgear for in-plant distribution. The main transformer station (MTS) and some other BBC switchgears use 220 V potential transformers and -/1A current transformers, which

are not suitable for our American monitoring instrumentation (common usage is 120 V potential transformers and -/5A current transformers). Hence, only meter readings on switchgear were used for purposes of auditing.

A number of meters appeared to be defective or had obvious erroneous readings. In general, all substations need metering calibration and/or replacement. If replacement is chosen, digital meters should be utilized as they require less maintenance and are easier to calibrate.

The substation for ADU #3, when modified, should include additional digital kW and kVAr meters or recorders. This will aid in proper tracking of energy usage. In addition, variable speed controllers for feed and cooling water pumps should be considered, as well as solid state controlled capacitor banks at the MCC to improve the power factor.

The substation for ADU #2 and #4, again, could use metering to follow energy usage of kW and kVAr. For power factor correction and energy conservation, variable frequency controllers could be added on large motors, or capacitors could be added with proper controllers. Such changes could save energy by better controlling cooling water pump flow rates (throttle back vs. 100% flow).

The Lube Complex substation appears in fairly good condition with the exception of metering calibration and lack of energy usage monitoring. This substation has power factor capacitors, which were disconnected during most of the survey, reducing the apparent power factor to 0.74 - 0.77. For proper usage, the capacitors should be controlled by calibrated (solid state) relays on 2-step banks. The substation main feeders should not be connected in parallel at low load, as one should be a spare.

The offsites substation metering appears confusing. One ammeter reading for 1.6 MVA transformer was too high. The system is in need of calibration and maintenance.

If power factor correction capacitors are installed, for an overall 0.9 PF level, they can be connected in 2 or 3 step banks in the main transformer station and controlled by power factor relays. Alternate installation could be in the individual substations.

In general, documentation, including one-line diagrams and motor data lists, needs to be updated to reflect the current status of equipment at the refinery.

Housekeeping

By far the largest contribution towards energy savings which can be realized through more attentive housekeeping, is steam conservation.

There are approximately 2100 steam traps at the Alexandria Petroleum Company. Of these, only 66 percent were found to be functioning properly. Items such as these can lead to significant energy loss over the course of a year.

Considering the small amount of time involved in checking, cleaning, and repairing steam traps, it should be relatively easy to improve procedures in order to have all of the steam traps functioning properly for a larger percentage of the time.

The instrumentation to test steam traps is already existing in the refinery. Proper maintenance of traps will benefit the refinery directly in the form of fuel savings.

Another major housekeeping item which requires attention concerns the large amounts of spilled wax present in the Lube Complex. Some leakage is unavoidable, but the quantity noted seemed excessive.

Maintenance

The majority of maintenance performed at APC entails steam cleaning of exchanger bundles, painting of units, and routine maintenance of pump internals, boilers and fired heaters. Exchanger shells must routinely be serviced to replace leaking gaskets, install sacrificial anodes in seawater cooling services and cleaning and repair of tube bundles.

It was noted that the manner in which these exchanger bundles are transported could be one of the contributing factors to leakage. Bundles are removed from the shells and placed on grade. Following this, the bundle is picked up with a forklift. The fork is place directly under the bundle and raised. The forklift then backs up and

stops abruptly. This causes the bundle to roll back on the forks and slam into the fork supports. This may cause tube bending or cracking. The proper transport method should be to attach chains to the eyelets provided on the exchanger bundle and pick it up with the chains. This minimizes shocks and abrasion to the tubes.

Other maintenance in the refinery appears in good condition overall. It was stated by APC and noted by FWUSA that the maintenance department at APC was understaffed. The significance of proper maintenance in a refinery cannot be overemphasized, and efforts should be made to increase the size and the ability of the maintenance department.

Management and Personnel

The management and personnel at the Alexandria Petroleum Company are already aware that a substantial amount of energy is required to process one barrel of crude. However, more emphasis needs to be placed on establishing just where the bulk of this energy is being consumed. Measures must be implemented to allow auditing and tracking of energy consumption. In this way, the management will be able to observe the results of energy conservation measures.

The personnel employed at Alexandria need to be reminded of the value of energy, and that its consumption must be limited. An operator who knows the consumption per day of his unit can then attempt to reduce this total for the same production goal.

At present, there is no reporting of energy consumption back to the individual units. It is recommended that three goals be established for each unit: production, product specification, and energy consumption. The addition of the third variable, energy, will make the operators of the units aware that energy can be conserved while maintaining the same production quota.

The savings in both energy and money per equal production of crude oil products can be very significant over a period of just one year. Production need not suffer as a result of energy conservation measures. A large percentage of energy conservation measures do not alter the process in any way. Furthermore, energy

conservation measures generally pay for themselves in periods of three years or less, after which the company receives the profit from these measures at the cost of a minimum amount of maintenance.

1.4 Recommendations

Tables 1.4A, 1.4B, and 1.4C, presented at the end of this section, list those Energy Conservation Opportunities (ECO) having a simple payout of five years or less.

Housekeeping Items

Under the category of housekeeping ECO's, are items requiring better maintenance, better operations and improved scheduling. The total installed cost for housekeeping ECO's is less than LE 40,000. In developing a list of these items, attention was paid to leaks of steam, air, condensate and water, poor combustion efficiency of various fired devices, poor insulation of hot or very cold (refrigerated) lines or equipment, operating procedures, instrumentation, etc.

Table 1.4A, Housekeeping, lists those ECO's having a simple payout of 5 years or less based on local costs to implement the ECO and local utility costs to calculate savings.

The implementation of all of the housekeeping items identified would result in a minimum of 1,900 T.O.E. saved annually, and represents 1% of the total annual energy consumption in the Alexandria refinery. This savings does not take into account the energy savings possible through the implementation of ECO's 31, 35, and 36. While it is impossible to quantify the energy savings realizable from these latter three ECO's, it is expected that they will result in significant continuing energy savings.

These housekeeping ECO's should be implemented as soon as possible, as they can be done with a minimum amount of in-country labor, manufactured equipment and money.

In-Country Investment Items

Items in this category are similar in nature to housekeeping items; however, an expenditure of over LE 40,000 is required to implement a particular ECO. All materials, labor and engineering can be purchased in-country.

Table 1.4B, In-Country Investment, lists those ECO's having a simple payout of less than five years based on worldwide equipment and utility costs.

The implementation of all of the foreign investment items would save a total of 18,835 T.O.E. per year, or 10.2% of the total energy used annually in the Alexandria Refinery. In addition, all but one of the ECO's have payouts of less than three years.

The largest potential for energy savings is the addition of an absorber to recover propane and butane from VRU off-gas (ECO-13). A savings of approximately 5,463 T.O.E. per year can be expected. This ECO will also reduce the flow of fuel to the flare.

The second largest potential for energy savings can be achieved through the proper operation of the approximately 2,100 steam traps at APC. The resulting energy savings is estimated to be 4,319 T.O.E. per year. Once the steam traps are in proper working order, it is estimated that an additional 1,283 T.O.E. can be saved each year by instituting a permanent program for steam trap testing and repair.

Foreign Investment

Items in this category require an investment of foreign (hard) currency to purchase materials, engineering and/or manpower from outside the country.

Table 1.4C, Foreign Investment, lists those ECO's having a simple payout of less than five years based on worldwide equipment and utility costs.

These ECO's have a good potential for the most energy saving, but also require the greatest investment cost. While the energy savings from the items in this category are not strictly additive, the energy savings that can be expected is 33,463 T.O.E. per year, if all were implemented.

Improving, adding and repairing instrumentation alone would result in an indirect energy savings of 924 T.O.E. per year. This investment would pay out in a little over two years.

A conceptual study indicates that the addition of a flare vapor recovery system is predicted to save 9,216 T.O.E. per year. The investment of approximately $3,387,960 would pay out in a little more than 3 years.

Improving the combustion efficiency of fired heaters in both the Atmospheric Distillation and Lube Oil Complexes would result in an annual energy savings of 9,626 T.O.E. The payout period is immediate.

Combustion air preheat in the Atmospheric Distillation Complex would pay out in slightly less than 5 years and result in a predicted annual savings of 5,019 T.O.E.

Improving the combustion efficiency of steam boilers would save 448 T.O.E. per year with essentially an immediate payout.

A front-end optimization study to optimize both column operation and preheat train integration of ADU #4 is estimated to result in an annual energy savings of 7,980 T.O.E.

Installation of a sour water recovery system in the ADU, recommissioning of the sour water stripper, and use of the stripped water as desalter water would have a rapid payout of less than six months and would result in a modest savings of 289 T.O.E. per year.

Installation of a gas turbine (ECO-28A) provides a good technical means of dealing with the persistent problem of power outages. A 30 MW unit will not only satisfy the refinery's entire power needs, with a good margin of additional design safety, but also the needs of an adjacent cement plant. The estimated foreign investment for the package unit is $14,629,100, and corresponds to a 3.06 year payout. This payout excludes the additional income generated from being on-stream a higher percentage of time and thus producing more saleable product.

A gas turbine with waste heat recovery (ECO-28B) provides a more efficient means of generating electricity than using a gas turbine alone. The fuel consumption of a gas turbine with waste heat recovery is two-thirds that of a gas turbine alone; however, there is the addition of electrical requirements for the waste heat recovery section.

A gas turbine package with waste heat recovery would be required to operate continuously. It is not practical to start-up and shut-down the waste

heat recovery facilities in short intervals. A gas turbine package alone, as discussed above, is able to be operated "on demand" if required.

The payout period for such a gas turbine package with waste heat recovery facilities is 5.0 years, based on energy cost savings alone. This payout excludes the additional income generated from being on-stream a higher percentage of time and thus producing more saleable product.

Other Items For Consideration

The addition of a hot oil belt to preheat crude and reboil the VRU Stripper (ECO-11) has a simple payout of 5.53 years. This payout period is based on making the most efficient use of the present VRU Stripper Reboiler heater. No additional heat sources were identified to reheat the circulating oil. However, if additional heat sources are installed in the future, this ECO will become more economical and should be studied again at that time.

Conclusions

It is important that the Housekeeping items listed in Table 1.4A be implemented as soon as possible. These energy conservation opportunities can be implemented by plant personnel using locally available materials.

The total estimated annual energy savings that can be derived through implementation of all non-redundant ECO's listed in Tables 1.4 A, B, and C is 44,982 T.O.E. This annual energy savings has a corresponding value of U.S. $11,127,290. The investment cost to implement all non-redundant ECO's is U.S. $20,296,243 and excludes the cost to implement ECO-10, Table 1.4C. These values result in an overall simple payout period of 1.82 years.

Table 1.4A HOUSEKEEPING ITEMS - ECO Summary

Plant: Alexandria Petroleum Company

ECO #	TITLE	WORLDWIDE ANNUAL ENERGY SAVINGS FUEL	WORLDWIDE ANNUAL ENERGY SAVINGS T.O.E.	WORLDWIDE INVESTMENT COST, $	WORLDWIDE ANNUAL COST SAVINGS, $	WORLDWIDE SIMPLE PAYOUT, YRS	LOCAL INVESTMENT COST, LE	LOCAL SIMPLE PAYOUT, YRS
Steam System								
22	Add new or repair existing insulation on steam and condensate lines.	453 Tons mazout	439	13,305	50,767	0.26	19,292	1.52
23	Repair steam, air, water, and condensate leaks from valves, lines, flanges, etc.	1,505 Tons mazout	1,461	8,750	168,665	IMMEDIATE	19,600	0.47
General								
31	Study the effect of insulation on heat loss from pipes.	--	--	--	--	IMMEDIATE	--	IMMEDIATE
35	Form a committee to plan and implement an energy conservation program in the plant.	--	--	--	--	IMMEDIATE	--	IMMEDIATE
36	Use of publicity, memos, newsletters, etc. to implement an energy program and make personnel aware of energy conservation.	--	--	--	--	IMMEDIATE	--	IMMEDIATE
TOTAL		--	1900.0	22055.0	219432.0	0.10	38892.0	0.71

NOTES: 1. Currency conversion 2.25 LE/$
2. Boiler efficiency 75%
3. Energy conversion 42.0 x 10E9 J/T.O.E.
4. Payout periods of less than 3 months have been labelled "IMMEDIATE"

Table 1.4B IN-COUNTRY INVESTMENT ITEMS - ECO Summary

Plant: Alexandria Petroleum Company

ECO #	TITLE	WORLDWIDE: ANNUAL ENERGY SAVINGS: FUEL	WORLDWIDE: ANNUAL ENERGY SAVINGS: T.O.E.	WORLDWIDE: INVESTMENT COST, $	WORLDWIDE: ANNUAL COST SAVINGS, $	WORLDWIDE: SIMPLE PAYOUT, YRS	LOCAL: INVESTMENT COST, LE	LOCAL: SIMPLE PAYOUT, YRS
Atmospheric Dist. Complex								
03	Eliminate unnecessary cases of cooling streams that are then reheated in downstream units.	1,636 Tons mazout	1,588	295,800	183,347	1.61	--	--
04	Install manual controls to reduce cooling water flows.	3,105 MWH	783	52,280	133,515	0.39	--	--
07	Install a sour water recovery system and integrate with existing sour water stripper in lube complex.	41 Tons mazout	40	211,700	231,612	0.91	--	--
08	Optimize the preheat train of ADU #2.	1,251 Tons mazout	1,215	49,400	140,200	0.35	--	--
09	Optimize the preheat train of ADU #3.	1,408 Tons mazout	1,367	96,400	157,795	0.61	--	--
10	Optimize the preheat train of ADU #4. (Addition of bypass valves)	270 Tons mazout	262	45,760	30,260	1.51	--	--
13	Add an Absorber to recover propane and butane from Vapor Recovery Unit off-gas.	6,000 Tons C3 LPG	5,463	288,700	1,219,838	IMMEDIATE	--	--
14	Recover waste heat from desalter water.	592 Tons mazout	575	142,400	66,335	2.15	--	--

Table 1.4B IN-COUNTRY INVESTMENT ITEMS - ECO Summary (Continued)

Plant: Alexandria Petroleum Company

ECO #	TITLE	WORLDWIDE: ANNUAL ENERGY SAVINGS: FUEL	WORLDWIDE: ANNUAL ENERGY SAVINGS: T.O.E.	WORLDWIDE: INVESTMENT COST, $	WORLDWIDE: ANNUAL COST SAVINGS, $	WORLDWIDE: SIMPLE PAYOUT, YRS	LOCAL: INVESTMENT COST, LE	LOCAL: SIMPLE PAYOUT, YRS
Lube Dist. Complex								
20	Use of a closed loop system to recover pump bearing cooling water.	-208 MWH	-52	183,200	101,800	1.80	--	--
Steam System								
21	Recover heat and produce steam from continuous boiler blowdown.	194 Tons mazout	188	83,200	21,742	3.83	--	--
26	Test, repair, replace steam traps.	4,449 Tons mazout	4,319	475,500	498,599	0.95	--	--
27	Install a condensate recovery system for ADU #2, ADU #3, ADU# 4, and the VRU.	1,859 Tons mazout	1,805	87,230	208,338	0.42	--	--
General								
30	Institute a permanent program for steam trap testing and repair.	1,321 Tons mazout	1,283	214,738	148,044	1.45	--	--
TOTAL		--	18,835	2,226,308	3,141,425	0.71	--	--

NOTES: 1. Currency conversion 2.25 LE/$
2. Boiler efficiency 75%
3. Energy conversion 42.0 x 10E9 J/T.O.E.
4. Payout periods of less than 3 months have been labelled "IMMEDIATE"

Table 1.4C FOREIGN INVESTMENT ITEMS - ECO Summary

Plant: Alexandria Petroleum Company

ECO #	TITLE	WORLDWIDE ANNUAL ENERGY SAVINGS FUEL	WORLDWIDE ANNUAL ENERGY SAVINGS T.O.E.	WORLDWIDE INVESTMENT COST, $	WORLDWIDE ANNUAL COST SAVINGS, $	WORLDWIDE SIMPLE PAYOUT, YRS	LOCAL INVESTMENT COST, LE	LOCAL SIMPLE PAYOUT, YRS
Atmospheric Dist. Complex								
01	Improve the combustion efficiency of fired heaters.	5,853 Tons mazout	5,682	84,380	657,066	IMMEDIATE	--	--
02	Addition of a flare vapor recovery system.	9,492 Tons mazout	9,216	3,387,960	1,063,768	3.18	--	--
05	Combustion air preheat through stack gas heat recovery.	5,170 Tons mazout	5,019	2,866,000	579,402	4.95	--	--
Atmospheric Dist. Complex								
10	Optimize the column operation and the preheat train in ADU #4.	8,219 Tons mazout	7,980	(*)	921,102	--	--	--
Lube Dist. Complex								
16	Improve the combustion efficiency of fired heaters.	4,062 Tons mazout	3,944	105,500	455,228	IMMEDIATE	--	--
19	Recommission the Sour Water Stripper and use stripped sour water in the desalters.	257 Tons mazout	250	94,300	206,430	0.46	--	--
Steam System								
24	Improve the combustion efficiency of steam boilers.	461 Tons mazout	448	21,100	51,664	0.41	--	--

(*) This ECO requires that a front-end optimization study be carried out. A proposal for a front-end study can be developed at a later date, if requested.

Table 1.4C FOREIGN INVESTMENT ITEMS - ECO Summary (continued)

Plant: Alexandria Petroleum Company

ECO #	TITLE	WORLDWIDE ANNUAL ENERGY SAVINGS FUELS	WORLDWIDE ANNUAL ENERGY SAVINGS T.O.E.	WORLDWIDE INVESTMENT COST, $	WORLDWIDE ANNUAL COST SAVINGS, $	WORLDWIDE SIMPLE PAYOUT, YRS	LOCAL INVESTMENT COST, LE	LOCAL SIMPLE PAYOUT, YRS
General								
28 A	Install a gas turbine electric generator.	--	--	14,629,100	4,784,000	3.06	--	--
28 B	Install a gas turbine electric generator with waste heat recovery.	--	--	31,610,000	6,256,000	5.00	--	--
34	Improve, add or fix instrumentaion to be able to properly monitor and control energy consumption. (Note 5)	393 MWH 781 Tons mazout 45 Fuel gas 17 LPG	924 (5)	247,500	111,541	2.22	--	--
TOTAL	(Excluding ECO-288 - NOT ADDITIVE) (NOTE 6)		33,463	21,435,840	8,830,201	2.43	--	--
GRAND TOTAL	(Tables 1.4 A, B, and C) (NOTES 6, 7)	--	44,982	20,296,243	11,127,290	1.82	--	--

NOTES:
1. Currency conversion 2.25 LE/$
2. Boiler efficiency 75%
3. Energy conversion 42.0 x 10E9 J/T.O.E.
4. Payout periods of less than 3 months have been labelled "IMMEDIATE"
5. Energy savings shown represent an indirect an indirect savings. Proper instrumentation will enhance the energy savings due to implementaion of the other ECO's.
6. The investment cost totals and the simple payout totals do not include an investment cost that will be necessary to implement ECO-10 (as mentioned in the first page of Table 1.4C)
7. Grand Total excludes ECO-02. Energy savings from ECO-02 are not additive with ECO-13 (Table 1.4B).

2.0 DISCUSSION

The Organization for Energy Planning in conjunction with the Alexandria Petroleum Company and Foster Wheeler USA Corporation have conducted an energy audit of the Alexandria Petroleum Company to develop, formulate, and rank ECO's. These energy conservation opportunities are presented in three categories, entitled:

- Housekeeping.

  These are items which require low cost/no cost solutions and can be implemented by the personnel at the plant.

- In-country - Investment.

  These are items which require an investment of over LE 40,000 of local currency to implement. All equipment necessary to implement this type of ECO can be made and purchased in-country.

- Foreign Investment.

  These are items which require foreign (hard) currency to purchase materials, engineering, and/or manpower from outside the country.

The overall program to evaluate the energy conservation opportunities at APC was performed in three steps, namely,

- Screening
- Preaudit
- Audit

The initial phase, screening, resulted in the selection of the APC plant as a reasonable candidate for an energy audit.

Upon completion of the screening activity, the preaudit phase was undertaken, the energy consumption of the plant was evaluated, and a list of ECO's was prepared.

This report documents the results of the preaudit and audit activities, and includes:

- An overall energy picture for 1987
- A discussion of the approach taken
- A detailed description of each ECO
- Supporting documentation as required

2.1 Objectives of the Audit

The dual objectives of the energy audit are:

- o identify and measure where energy is used, and
- o identify, evaluate, and list in order of priority each housekeeping ECO and each capital investment ECO. The capital investment ECO's are presented in two categories, in-country investment and foreign investment.

2.1.1 Identify Where Energy is Used

The achievement of this objective requires the evaluation, in some detail, of all features of energy consumption in the plant.

Subactivities to this objective include:

- o the creation of a "base case", as a reference for savings, corresponding to the most current calendar year operation.
- o the careful scrutiny of records, and their supplementation by field measurements, as necessary to establish the utility consumption.
- o particular attention to the energy consumption of large users, with the reasonable assumption that major utility consumption devices offer much greater opportunities for savings.
- o a review of all sources of lost or wasted energy, such as leaks in steam, air, or water systems, and missing or insufficient insulation.
- o a review of all losses which can be recovered, and an appraisal of those which cannot be recovered.

One important aspect of energy conservation is being able to document plant energy consumption and how it varies with time. In order to do this properly it is necessary that the plant assign an individual to keep and maintain a system of records which document both past and present energy consumption. These records should be kept in an active file which goes back a minimum of

five years. Records older than five years should be stored in an inactive file for an additional five years, after which they may be discarded. In this way a plant can carefully study and monitor the improvements which will occur in terms of reduced energy usage as attractive ECO's are implemented within the plant.

2.1.2 Identify Energy Conservation Opportunities

This objective is based upon the proper and effective completion of the identification of all locations in which energy is currently consumed. After this definition is complete, the task of completing the identification and the economic justification, or lack thereof, of each ECO can be completed.

Again, the achievement of the objective includes several sub tasks, which include:

- evaluation of ECO's which relate to housekeeping items.
- evaluation of ECO's which require an investment for implementation.
- development of all significant data to prioritize the ECO's; highlight attractive investments, and provide a basis for rejection of unsatisfactory ECO's.

2.2 Method of Approach

A detailed schedule for carrying out the preaudit and audit work was developed. The time frame for the overall audit work was set at sixteen weeks, including reports and presentation.

Personnel from OEP, APC, and FWUSA specialists were all deployed in a coordinated effort to accomplish this task.

The first day started with a planning meeting between OEP and FWUSA personnel. A detailed measurement plan was set up, followed by a visit to the plant to acquaint the plant personnel with the plan. Energy consumption data, required penetrations, and any comments and ideas which plant personnel might have were collected and discussed.

During the first four weeks, after the necessary preparations were made by plant personnel, instrument

measurements, visual observations and all necessary information required for the audit report was gathered. In addition to the FWUSA team already present, the audit staff was augmented by FWUSA specialist personnel, which included an additional energy systems operations engineer, combustion and electrical experts. These personnel worked with other audit team members and assisted in instrument measurements as well as in the gathering and analysis of other relevant data.

After the first seven weeks, a cost estimating specialist joined the team, and started the estimating work required for each of the ECO's. During this period sketches were prepared for the various systems, as well as listings of equipment and other technical data, as necessary for complete definition of each of the ECO's.

The major part of the work, after the first four weeks of the audit, was carried out in OEP's offices in Cairo, with plant coordination as necessary to produce a complete, coherent and usable report.

During the latter part of the eighth week, report preparation began and continued through the eleventh week.

Weeks fourteen and fifteen were reserved for presentations to OEP and then to the plant, culminating with the finished report at the end of the sixteenth week.

2.3 Goals and Special Considerations

In order to have an effective energy conservation program it is necessary to establish a goal, as a target for which everyone in the plant strives. This goal should be realistic and also somewhat conservative, rather than overly optimistic, in order to ensure that it can be achieved. A goal which we would recommend is a reduction in yearly energy consumption of 7 percent at the end of two years, following partial implementation of housekeeping and in-country investment items, and 18 percent at the end of a five year program of implementation of foreign investment related items.

The results achieved each year are to be plotted and compared against the base case (energy consumption before any implementation was started) in order to demonstrate the actual reduction in consumption versus the predicted goal. Any deviation in energy consumption must be accounted for in terms of increased production, new products, new units, etc.

It is necessary that the scheduling of planned shutdowns be coordinated in such a way that energy conservation recommendations can be implemented.

2.4 Analysis of Energy Consumption

The audit provided a review of the energy consumption of the plant, including an examination of the various types of energy consumed, and their cost impact on production. This energy consumption analysis, as further described below, provides the baseline for the audit, and the implementation of its recommendations.

The basic analysis of these variables is accomplished through the use of a specialized computer program developed by FWUSA, and employed in the preaudit and audit phases of the work.

This program requires, as input, the quantities, unit cost, and energy equivalent of all energy forms supplied to the plant. This includes fuel oils, electricity, natural gas, and other fuels, as applicable. These data, which include production quantities, are entered on a monthly basis, for one recent calendar year. Through systematic calculations the program produces a variety of results in tabular form. These include monthly cost of the energy sources themselves in units of currency or energy consumption, as well as the relationship of energy cost and consumption to production units.

Each of the tables contained in this section is produced with both domestic energy prices and worldwide prices to permit a true evaluation of cost and cost savings.

Pricing basis is per the Basic Engineering Data, which is included in Appendix "1" of this report. The worldwide energy prices and T.O.E. (ton oil equivalent) are of particular value in this analysis, as they reflect the value of the energy, if used as an export product.

The existence of these tables permits direct graphs to be made on the computer, to exhibit a graphic display of the tabulated data, and to aid in analysis.

The choice of graphs to be presented is generally made after a careful review of the tables, to detect trends which would be meaningful as curves when plotted. The graphs of greatest interest will be energy consumption, production costs per production unit and energy consumption per production unit, plotted against calendar time.

Alexandria Petroleum Company - Energy Audit

Table 1A reflects the energy consumption at APC. Table 2A reflects the cost of energy, and Table 3A gives the monthly production figures for 1987 at APC as well as energy and cost figures per ton of crude processed.

Three graphs have been plotted by the computer for the Alexandria Petroleum Company. Energy consumption has been plotted in joules in order to compare the energy consumption figures to worldwide energy consumption in the petroleum refining industry. The conclusions drawn from the three energy consumption tables and the three graphs follow the presentation of the tables and graphs.

TABLE 1 - MONTHLY ENERGY CONSUMPTION

CLIENT: U.S. AID/OEP
DATA: JAN-DEC 1987

COMPANY: ALEXANDRIA PETROLEUM COMPANY
UNIT : APC REFINERY

		ELECTRICITY			#6 FUEL OIL			FUEL GAS			LPG			TOTAL ENERGY	
		PURCHASED ENERGY	EQUIVALENT ENERGY		PURCHASED ENERGY	EQUIVALENT ENERGY		PURCHASED ENERGY	EQUIVALENT ENERGY		PURCHASED ENERGY	EQUIVALENT ENERGY			
		MWH	J x 10E9	T.O.E.**	TONS	J x 10E9	T.O.E.	TONS	J x 10E9	T.O.E.	TONS	J x 10E9	T.O.E.	J x 10E9	T.O.E.**
1	JAN	4061.9	14622.8	1024.0	10900.7	444439.6	10581.9	1100.0	51047.7	1215.4	250.0	11407.4	271.6	521517.6	13092.9
2	FEB	6814.0	24530.4	1717.8	12472.1	508506.0	12107.3	890.0	41302.2	983.4	260.0	11863.7	282.5	586202.4	15091.0
3	MAR	5494.4	19779.8	1385.1	12800.9	521912.6	12426.5	790.0	36661.5	872.9	255.0	11635.6	277.0	589989.5	14961.6
4	APR	8239.2	29661.1	2077.1	13930.0	567947.8	13522.6	1300.0	60329.1	1436.4	245.0	11179.3	266.2	669117.3	17302.3
5	MAY	5519.6	19870.6	1391.5	13842.5	564378.3	13437.6	620.0	28772.3	685.1	240.0	10951.1	260.7	623972.3	15774.9
6	JUN	7399.7	26638.9	1865.5	12758.9	520201.2	12385.7	400.0	18562.8	442.0	246.0	11224.9	267.3	576627.8	14960.4
7	JUL	6307.9	22708.4	1590.2	11824.2	482091.7	11478.4	540.0	25059.8	596.7	305.0	13917.0	331.4	543777.0	13996.6
8	AUG	7558.6	27211.0	1905.5	13305.4	542480.9	12916.2	650.0	30164.6	718.2	290.0	13232.6	315.1	613089.0	15855.0
9	SEP	7519.1	27068.8	1895.6	13041.2	531707.7	12659.7	1100.0	51047.7	1215.4	295.0	13460.7	320.5	623284.9	16091.2
10	OCT	10308.1	37109.2	2598.7	13892.7	566426.3	13486.3	570.0	26452.0	629.8	310.0	14145.2	336.8	644132.6	17051.6
11	NOV	4052.0	14587.2	1021.5	13739.1	560163.1	13337.2	580.0	26916.1	640.9	320.0	14601.5	347.7	616267.9	15347.2
12	DEC	5283.6	19021.0	1332.0	13705.2	558782.3	13304.3	350.0	16242.5	386.7	301.0	13734.5	327.0	607780.2	15350.1
ANNUAL TOTALS		78558.1	282809.2	19804.6	156212.9	6369037.6	151643.8	8890.0	412558.2	9822.8	3317.0	151353.5	3603.7	7215758.5	184874.8
MONTHLY AVERAGE		6546.5	23567.4	1650.4	13017.7	530753.1	12637.0	740.8	34379.9	818.6	276.4	12612.8	300.3	601313.2	15406.2
NOTES		3.60 x 10E9 J / MWH			40.7715 J x 10E9/TON			46.407 J x 10E9 / TON			45.63 J x 10E9 / TON			42.00 J x 10E9/T.O.E.	

** ELECTRICAL T.O.E. VALUES INCLUDE A TYPICAL 34% EFFICIENCY FACTOR AND CORRESPOND TO GENERATING ELECTRICITY USING A CONDENSING STEAM TURBINE

TABLE 2 - MONTHLY ENERGY COSTS

CLIENT: U.S. AID/OEP
DATA: JAN-DEC 1987

COMPANY: ALEXANDRIA PETROLEUM COMPANY
UNIT : APC REFINERY

		ELECTRICITY			# 6 FUEL OIL			FUEL GAS			LPG			TOTAL ENERGY COST	
		PURCHASED ENERGY MWH	COST LE	COST US $	PURCHASED ENERGY TONS	COST LE	COST US $	PURCHASED ENERGY TONS	COST LE	COST US $	PURCHASED ENERGY TONS	COST LE	COST US $	TOTAL COST LE	TOTAL COST US $
1	JAN	4061.9	69052	174662	10900.7	305221	1221645	1100.0	5665	106447	250.0	2250.0	42290.0	382188	1545044
2	FEB	6814.0	115838	293002	12472.1	349218	1397747	890.0	4584	86125	260.0	2340.0	43981.6	471980	1820856
3	MAR	5494.4	93405	236259	12800.9	358425	1434598	790.0	4069	76448	255.0	2295.0	43135.8	458194	1790441
4	APR	8239.2	140066	354286	13930.0	390040	1561136	1300.0	6695	125801	245.0	2205.0	41444.2	539007	2082667
5	MAY	5519.6	93833	237343	13842.5	387589	1551324	620.0	3193	59997	240.0	2160.0	40598.4	486775	1869263
6	JUN	7399.7	125795	318187	12758.9	357250	1429894	400.0	2060	38708	246.0	2214.0	41613.4	487319	1828402
7	JUL	6307.9	107234	271240	11824.2	331078	1325141	540.0	2781	52256	305.0	2745.0	51593.8	443839	1700230
8	AUG	7558.6	128496	325020	13305.4	372551	1491135	650.0	3348	62901	290.0	2610.0	49056.4	507005	1928111
9	SEP	7519.1	127825	323321	13041.2	365152	1461522	1100.0	5665	106447	295.0	2655.0	49902.2	501297	1941192
10	OCT	10308.1	175238	443248	13892.7	388995	1556954	570.0	2936	55159	310.0	2790.0	52439.6	569959	2107801
11	NOV	4052.0	68884	174236	13739.1	384694	1539738	580.0	2987	56127	320.0	2880.0	54131.2	459445	1824232
12	DEC	5283.6	89821	227195	13705.2	383746	1535943	350.0	1803	33870	301.0	2709.0	50917.2	476079	1847924
	ANNUAL TOTALS	78558.1	1335488	3377998	156212.9	4373960	17506776	8890.0	45784	860285	3317.0	29853	561104	5785085	22306163
	MONTHLY AVERAGE	6546.5	111291	281500	13017.7	364497	1458898	740.8	3815	71690	276.4	2488	46759	482090	1858847
	NOTES	17.00 L.E./MWH 43.00 US $/MWH			28.00 L.E./TON 112.07 US $/TON			5.15 L.E./TON 96.77 US $/TON			9.0 L.E./TON 169.2 US $/TON				

TABLE 3 - MONTHLY PRODUCTION, COST AND ENERGY PER UNIT

CLIENT: U.S. AID\OEP COMPANY: ALEXANDRIA PETROLEUM COMPANY
DATA : JAN-DEC 1987 UNIT : APC REFINERY

		CRUDE PRODUCTION	ENERGY COST PER UNIT		ENERGY PER UNIT	
		TONS	LE / TON	US $ / TON	Jx10E9/TON	T.O.E./TON
1	JAN	416828.0	0.92	3.71	1.251	0.031
2	FEB	383454.0	1.23	4.75	1.529	0.039
3	MAR	392061.0	1.17	4.57	1.505	0.038
4	APR	444834.0	1.21	4.68	1.504	0.039
5	MAY	448450.0	1.09	4.21	1.391	0.035
6	JUN	411251.0	1.18	4.45	1.402	0.036
7	JUL	397479.0	1.12	4.28	1.368	0.035
8	AUG	430757.0	1.18	4.48	1.423	0.037
9	SEP	415292.0	1.21	4.67	1.501	0.039
10	OCT	430696.0	1.32	4.89	1.496	0.040
11	NOV	372882.0	1.23	4.89	1.653	0.041
12	DEC	398649.0	1.20	4.64	1.525	0.039
	ANNUAL TOTALS	4942633				
	MONTHLY AVERAGE	411886.1	1.17	4.52	1.462	0.037

GRAPH – 1 (JOULES)

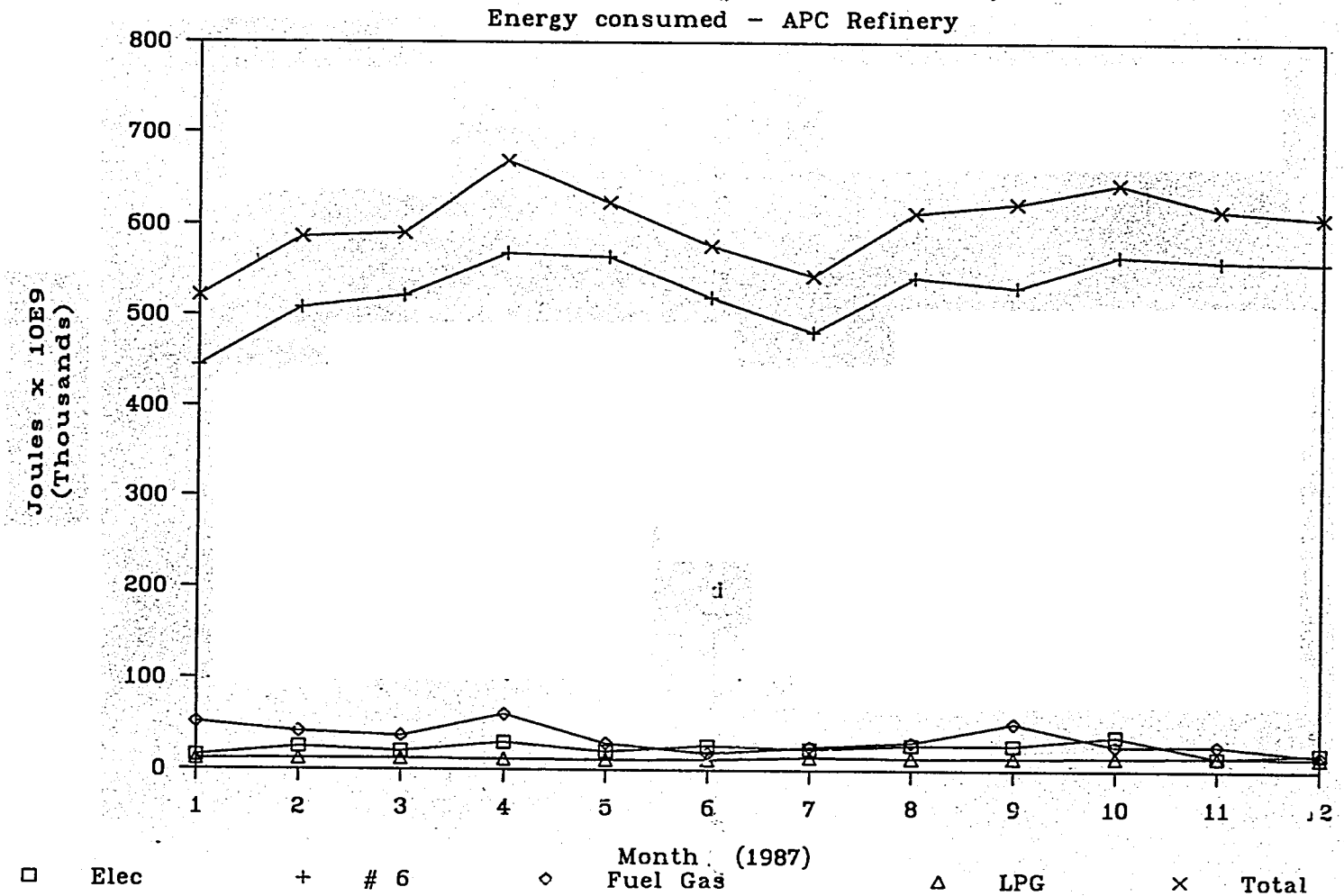

GRAPH – 2 (US $/TON)

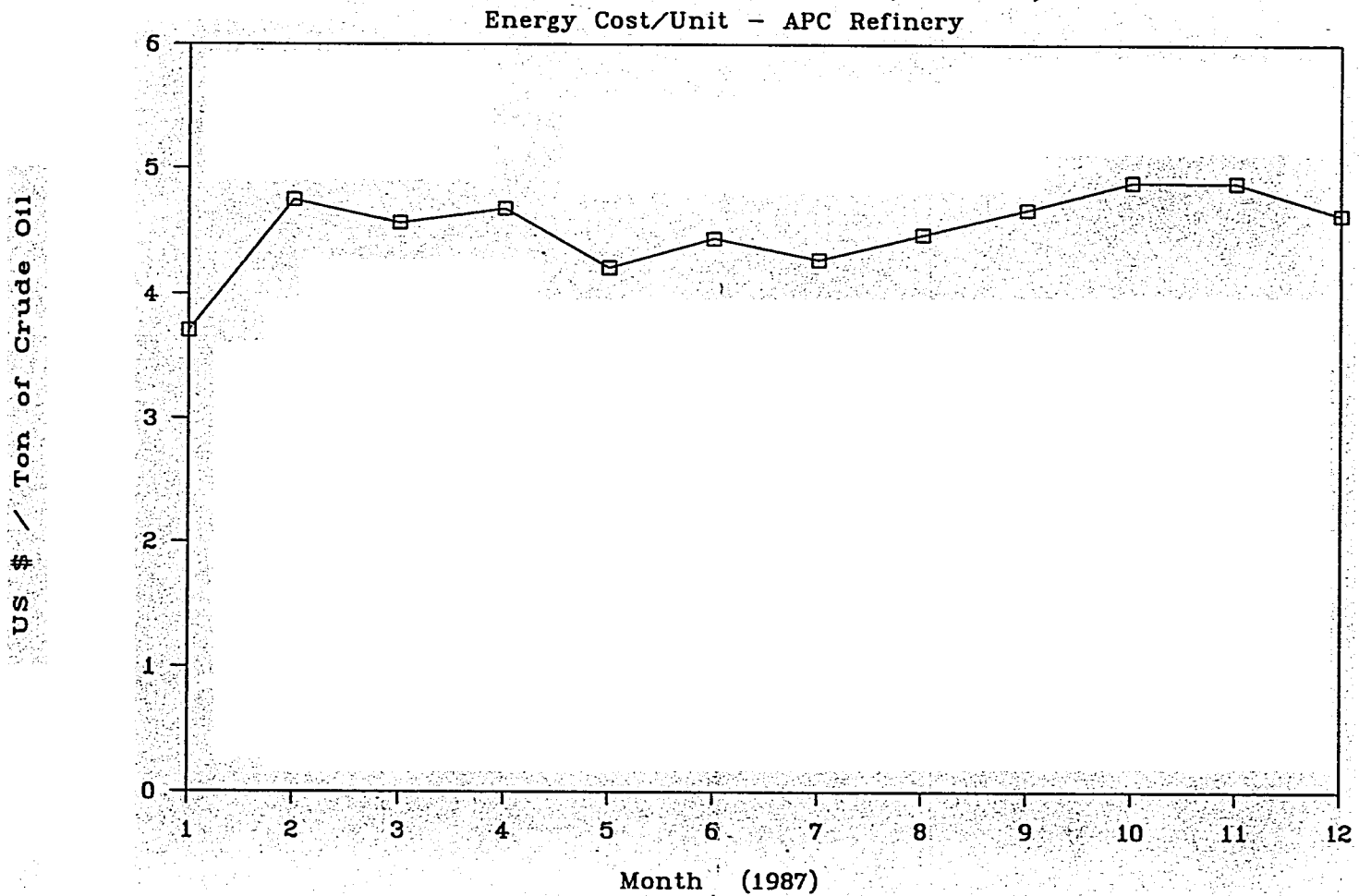

GRAPH – 3 (JOULES/TON)

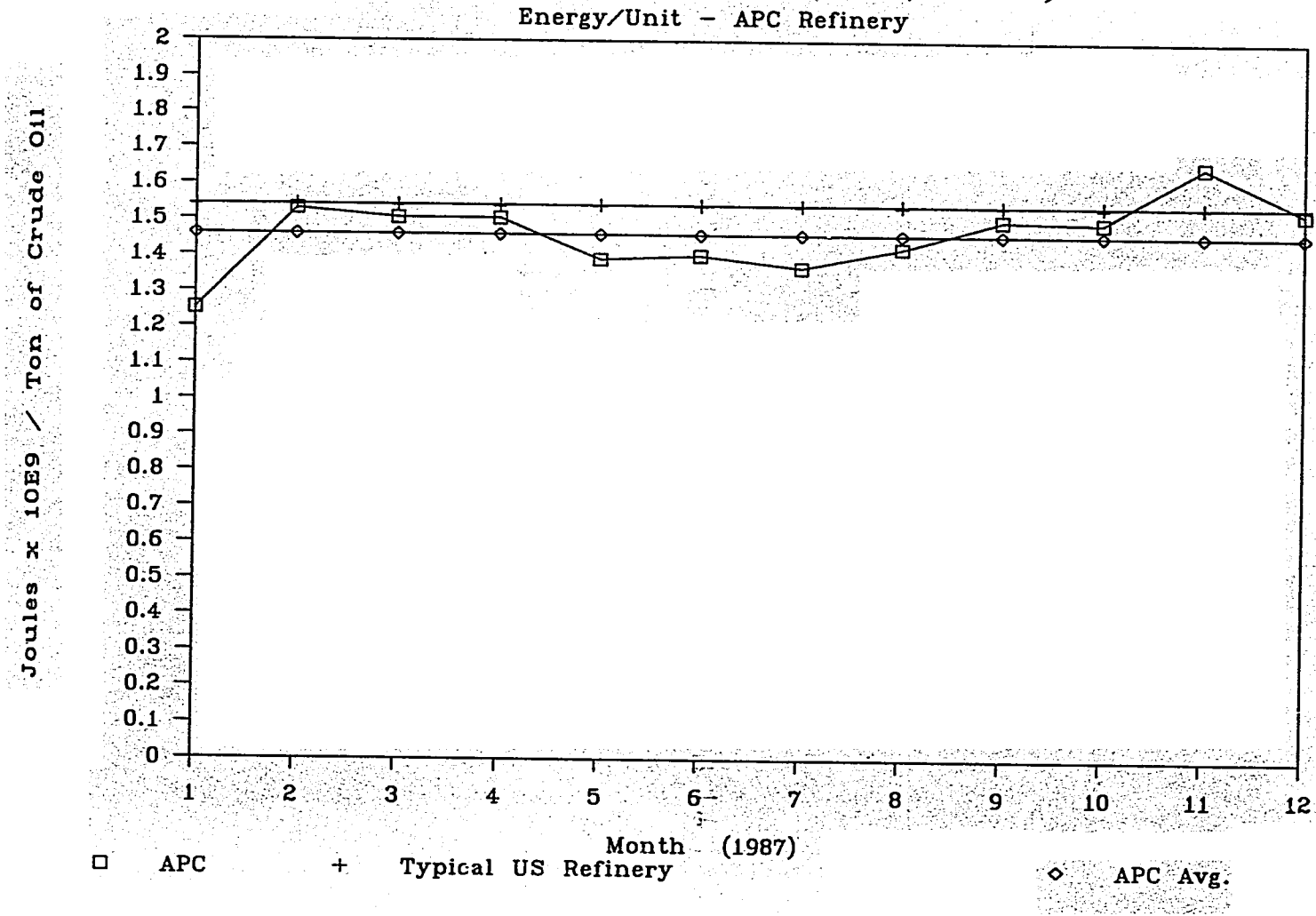

2.4.1 Discussion of Tables

Table 1

The monthly energy consumption for the refinery varied from a low of 521,518 x 10^9 joules in January to a high of 669,117 x 10^9 joules in April. The majority of fuel used is #6 fuel oil, accounting for 88% of the average total monthly energy usage. Attention should therefore be focused primarily on saving #6 fuel oil, as it would provide a significant energy savings, as reflected by the percentage of overall energy consumed in the refinery. Electricity accounts for 4% of the energy usage and fuel gas 6%. The LPG fuel used represents only 2% of the total energy used.

Table 2

The energy costs show that the annual electricity cost is approximately one-fifth the annual #6 fuel oil cost, even though the equivalent energy derived from the #6 fuel oil consumption, in joules, is 23 times that of electricity. This indicates that significant cost savings would result by substituting less expensive energy for electricity, or by generating electricity at the plant at a cost per MWH lower than the cost to purchase the same electricity from the electric company.

Table 3

The crude oil processing (production) rates show a low of 372,882 tons in November, and a high of 448,450 tons in May. This represents a monthly variation between maximum and minimum processing, for the entire year of 1987, of only 20%. This is quite stable. The energy consumption per ton ranges from 1.251 to 1.653 x 10^9 joules, while the energy cost per ton, excluding the month of January, varies from LE 1.09 to LE 1.32, also relatively stable. The lowest cost per ton and energy usage per ton are for the month of January, when the Lube Oil Complex was not in full operation.

2.4.2 Discussion of Graphs

Graph 1

This graph illustrates the contribution of the various forms of energy in the refinery to the total energy consumption. It graphically shows the large usage of #6 fuel oil, as compared to fuel gas and electricity. The graph also shows how energy consumption is lowest in the month of January, when the Lube Oil Complex was not in full operation, and highest in the months of April and May, when the crude processing rates were at the highest values for the year.

Graph 2

The cost per ton of crude oil processed in the refinery remains very constant throughout the year. If we eliminate the month of January, when the Lube Oil Complex was not operating fully, the fluctuation, in US$ per ton, is only 16% for the entire year.

Graph 3

Depending upon its complexity, a typical refinery today will consume between approximately 4% (1.5×10^9 joules/ton) and 14% (5.25×10^9 joules/ton) of the energy contained in the crude that it is processing. A very simple refinery, containing mostly crude and vacuum distillation processes and relatively little additional processing, would be expected to consume a quantity of energy in the region of 4% or approximately 1.5×10^9 joules/ton. A highly complex refinery containing a full range of catalytic and thermal processes for cracking, reforming and hydroprocessing of the various crude fractions would be expected to consume as much as 14% or approximately 5.25×10^9 joules/ton.

Based upon an analysis of the refining units presently contained within the Alexandria refinery, we would expect a "typical refinery" of its complexity to consume 3.9% of the crude processed, or 1.54×10^9 joules/ton. This value is shown on Graph 3, together with the actual consumption

experienced by the Alexandria Refinery during each of the twelve months of 1987. It is interesting to note that during most of 1987 the Alexandria refinery was at or below the energy consumption of a "typical refinery" of its complexity. One of the reasons why this refinery appears to have such a low energy consumption per ton of crude processed, is that only 38% of the total crude to the three crude units is processed in the Vacuum Unit and Lube Oil Complex. Additional factors that lead towards low energy consumption are relaxed product specifications, as compared to international values, and lack of stringent pollution control standards and facilities.

2.5 Economic Evaluation

In carrying out economic evaluations for each of the potential energy conservation opportunities involving an investment, the following steps must be taken:

- Establish utility costs/economic criteria
- Develop energy savings
- Estimate investment cost
- Decide if project is attractive

For this energy audit the utility costs are defined in the Basic Engineering Data contained in Appendix "1".

Both the worldwide and the local cost of the utilities involved are used in each case being evaluated in order to establish a realistic value for the energy savings. The criteria for evaluation which are used in each case is simple payout, defined as estimated investment cost divided by annual savings and discounted cash flow (DCF). The DCF method assumes a 32% tax rate, 3% operating cost, 2.5% salvage value on investment, 30% yearly escalation on investment, a 10 year life, and a constant yearly value for the annual energy savings over the life of the project. These criteria are simple to use and very effective in establishing a priority listing for a group of potential projects.

As a part of the evaluation a simplified design and/or equipment list is developed which contains enough detail to establish an estimated investment cost. The key information needed for any evaluation is an estimate of the energy saved and an estimate of the investment cost. Since these two topics are so crucial to an effective audit, each of them are discussed separately in the sections which follow.

2.5.1 Value of Energy Saved

The first step in predicting the value of the energy saved for any ECO is to establish the energy consumption of the current operation or the so called "base case". Once the base case is established, the ECO must be compared to it to determine exactly what energy savings would take place if the ECO were to be implemented. The savings are initially calculated on an hourly basis in terms of the units of energy normally used.

The next step is to calculate the energy savings on an annual basis taking into account the number of days per year the plant operates, shutdowns for

maintenance, and the number of shifts used for each operating day.

Once this is done, the annual energy savings is converted into U.S. dollars ($) through the use of the worldwide cost data for utilities given in Appendix "1".

2.5.2 Estimating Investment Cost

Each ECO which requires the expenditure of money, regardless of whether it is a housekeeping, in-country investment, or foreign investment ECO, has been provided with an individual estimate of costs. These estimates are of a preliminary nature. Definitive estimates are only possible following detailed engineering.

The majority of the estimates, especially those which are well defined, are estimated using a "definitive" type format enumerating and quantifying, where possible, each discipline of work. Material and installation manhours are estimated separately. In those cases in which the process equipment represents the large majority of the cost, and the bulk materials cannot be accurately defined, the estimate was done using a factored technique for bulk materials and labor.

Engineering data and technical information used in preparation of each estimate is based on the equipment list and technical description provided for each ECO as prepared by the responsible engineer as shown with sketches or schematic drawings when required.

The estimates are done using United States material pricing and United States standard construction manhours as a base line. The material costs are adjusted for a worldwide pricing basis and then the dollar (US) value has been converted to Egyptian pounds at the rate of 2.25 LE / $1.00 (US). The worldwide pricing adjustment is based on historical data and experience in worldwide procurement and construction. It represents a sampling of purchased materials from engineering offices in England, France, United States, Italy and Spain which includes Far East manufactured materials purchased from these locations.

Construction manhours have been adjusted from a baseline representing a U.S. Gulf Coast location to the productivity realized in previous Foster

Wheeler projects carried out in Egypt. Once again, worldwide experience was used as the primary determinant on productivity adjustment. Other factors were considered such as the size and complexity of each item of work, the amount of engineering that will be provided, the amount and type of supervision and who will be executing the work (in plant personnel, contractor, etc.).

Labor rates for construction crafts in Egypt were obtained from Foster Wheeler's Labor Relations Dept., local Egyptian contractors, and rates published in Engineering News magazine.

Each estimate includes:

a) Indirect costs. These include construction supervision, major tools, temporary facilities, subcontractor's requirements.

b) Home office costs. These include engineering, purchasing, drafting and project management. Home office costs were estimated on a factored basis.

All estimates are based on instant execution (No escalation has been applied). Labor is based on a straight time normal work week. It has been assumed that all construction work can proceed with continuity and without interruption or delay due to plant operation interference. It is anticipated that plant shutdowns of sufficient duration will be available, when necessary, to install the needed equipment to implement a particular ECO.

No provision is made for import duties or taxes, as these items require detailed information which is normally not available until the project (or ECO) execution plan is developed.

All estimates for engineering assume execution by local Egyptian engineering contractors, with engineering supervision and/or assistance from an international contractor's staff. This assistance will involve local supervision on all projects, and a "front end" engineering package, as a technical basis, on major projects.

3.0 ENERGY CONSERVATION OPPORTUNITIES (ECO's)

3.1 Summary List

Following is a list of ECO's identified and studied at the Alexandria Petroleum Company.

Atmospheric Distillation Complex

ECO-01	Study combustion efficiency of fired heaters.
ECO-02	Study recovery of vapors lost to flare.
ECO-03	Identify various cases of unnecessary cooling of streams that are then reheated in downstream units.
ECO-04	Install manual controls to reduce cooling water flows by raising cooling water return temperatures.
ECO-05	Combustion air preheat through stack gas heat recovery.
ECO-06	(Number not used)
ECO-07	Install sour water recovery system and investigate integration with existing sour water stripper in Lube Complex.
ECO-08	Investigate ADU #2 crude preheat train for optimum heat recovery.
ECO-09	Investigate ADU #3 crude preheat train for optimum heat recovery.
ECO-10	Investigate ADU #4 crude preheat train for optimum heat recovery.
ECO-11	Investigate the feasibility of integrating sources and sinks suitable to establish a hot oil or hot water belt.
ECO-12	Verify adequacy of insulation thicknesses of crude towers.
ECO-13	Investigate addition of an absorber to recover propane and butane from Vapor Recovery Unit off-gas.
ECO-14	Recover waste heat from desalter water.

Lube Oil Complex

ECO-15	Study addition of new burners to fire hydrogen rich purge gas from hydrotreaters.
ECO-16	Check combustion efficiency of fired heaters.
ECO-17	Combustion air preheat through stack gas heat recovery.
ECO-18	(Number not used)
ECO-19	Recommission Sour Water Stripper and use stripped sour water in desalters.
ECO-20	Investigate the use of a closed loop system to recover pump bearing cooling water.

Steam System

ECO-21	Recover heat and produce steam from continuous boiler blowdown.
ECO-22	Add new or repair existing insulation on steam and condensate lines.
ECO-23	Repair steam, air, water, and condensate leaks from valves, lines, flanges, etc.
ECO-24	Study combustion efficiency of boilers.
ECO-25	Combustion air preheat through stack gas heat recovery.
ECO-26	Test, repair, replace steam traps.
ECO-27	Installation of a condensate recovery system for ADU #2, ADU #3, ADU #4, and the VRU.

General

ECO-28A	Investigate the use of a gas turbine electrical generator to supplement the power supply.
ECO-28B	Investigate the use of a gas turbine electrical generator with waste heat recovery to supplement the power supply.

ECO-29 Installation of capacitors, as required, to improve power factor.

ECO-30 Institute a program for steam trap testing and repair.

ECO-31 Study the effect of insulation on heat loss from pipes.

ECO-32 Provide automatic fuel/air ratio controllers for steam boilers and furnaces.

ECO-33 Investigate energy savings by changing drive controls of variable load equipment to variable frequency (speed) controllers.

ECO-34 Improve, add, or fix instrumentation to be able to properly monitor and control energy consumption.

ECO-35 Form a committee to plan and implement an energy conservation program in plant.

ECO-36 Use of publicity, memos, newsletters, etc., to implement an energy program and make

3.2 Detailed ECO Presentation

For each of the ECO's summarized in Section 3.1, a detailed ECO description and evaluation has been developed. All of this information is now presented in the pages which follow.

Note that each ECO is given an identification number, such as ECO-01, which ties it directly to the list of ECO's, as shown in Section 3.1. Additionally, each ECO is written in such a way that it can be "self standing," and contains, at the bottom of each of its pages, an identifier and page number for that ECO alone. This step is taken so that the full text which defines that ECO, including its technical description, investment cost, savings, and payback can be removed for easy use elsewhere in project definition documents, financing discussions, and the like.

ATMOSPHERIC DISTILLATION COMPLEX	Annual Savings, TOE		:	5682
	Annual Savings, $		:	657,066
	Investment Cost, $		:	84,380
CHECK COMBUSTION EFFICIENCY OF PROCESS FIRED HEATERS	Payout:	Simple, Yrs	:	0.13
		DCF, %	:	--

ECO-01

1.0 PURPOSE

The purpose of this ECO is to improve the overall efficiency of the atmospheric distillation complex process fired heaters. Combustion efficiency of the process fired heaters is highly affected by the oxygen content of the flue gas. Additionally, combustion efficiency as affected by the degree to which combustion is completed.

2.0 PROCESS DESCRIPTION

Fired heater fuel rates are adjusted in accordance with the required process demand. Air entering through the burner register mixes with the misted fuel oil or fuel gas at the burner throat and should be mixed sufficiently to produce complete combustion. Air is drawn into the burner registers as a result of the natural draft effect. When normal load changes in the process are made, air should be adjusted with the burner dampers or registers.

As the quantity of excess air is increased above the design requirements for a given firing rate, more fuel must be fired to the furnace to heat up the additional air. The excess air passes through the fired heater and up the stack releasing only a small portion of its energy to the process. Stoichiometric combustion is not possible (0 percent excess air) therefore, a small amount of excess air is required to allow for complete combustion. This small amount of excess air not only helps to force the combustion reaction to completion, but also acts to aid in the fuel air mixing process.

The condition and design of the burners must be such that complete mixing of fuel and air streams occurs. If a very good degree of mixing is not accomplished in the burners, complete combustion cannot occur. This means that some of the hydrocarbons that are supplied in the fuel are not able to complete the oxidation reaction and do not liberate heat. The net result is an effective reduction in the heating value of the fuel that is supplied. Visible smoke in the stack exhaust or in the combustion chamber of the fired heater is an indication that combustion is not complete. The existence of carbon monoxide is also an indication of this condition.

45'

Monitoring of the flue oxygen and combustibles provides the operator of the fired heater with the information that is needed so that adjustments in the burner registers or dampers can be made as operating conditions change. It is absolutely imperative that all fired heaters have permanently installed and operating oxygen analyzers local to the furnace firing controls. For natural draft furnaces, where the dampers are moved manually, the optimum location for the oxygen and combustibles analyzers is near the furnace at grade.

The oxygen analyzer should draw its sample from the radiant section of the fired heater. This will provide a sample of the flue gas that best represents the oxygen and combustibles content of the combustion process. If the analyzers are located in the stack or in the convection section any leakage of air (due to the low pressure in the furnace) into the furnace will mix with the flue gas and increase the oxygen reading on the analyzer. The purpose of the oxygen analyzer is to provide information about the combustion process only.

Also critical to the furnace, is maintenance of the arch draft (upper portion of the radiant section). The draft at the arch should be controlled at 2mm water gage below atmospheric at all times. A controlled, negative pressure is required to provide draft to draw air into the burners and protect personnel, but too high a furnace draft will increase the leakage of air into the furnace and thus cool down the flue gas decreasing the furnace overall efficiency. It is absolutely imperative that a pressure sensor, transmitter and indicator be working at all times. The stack damper should be manually adjusted to correct the arch draft. The burner dampers should not be used to adjust the arch draft. The burner dampers should only be used to adjust the flue gas oxygen level.

Installation of oxygen analyzers in the radiant section of each fired heater will make it possible to operate the atmospheric distillation complex furnaces at a flue gas oxygen levels of 5.0 percent as recommended in the furnace design data sheets.

It is also suggested that the oxygen analyzers have attached combustible analyzers. Design improvements in burners have made it possible to provide excellent combustion efficiency at very low levels of excess air. If the existing burners cannot produce the desired oxygen levels in the flue gas, while also providing complete combustion with well defined flame patterns, burner replacement or repair may be required.

3.0 EQUIPMENT LIST/SIZE

4 (four) oxygen and combustibles analyzers (as supplied by Thermox Corp. or Teledyne Analytical Instruments Corp.)

-44

4.0 PREDICTED ENERGY SAVINGS

The following tabulation shows the current flue gas oxygen levels and efficiencies for the atmospheric distillation complex process fired heaters:

	VRU	CDU #2	CDU #3	CDU #4
OXYGEN (%)	8.0	7.7	14.0	7.7
EFFICIENCY(%)	69.7	79.9	59.2	78.3

The tabulation that follows indicates the improved efficiencies that will result when the flue gas oxygen is maintained as indicated:

	VRU	CDU #2	CDU #3	CDU #4
OXYGEN (%)	5.0	5.0	5.0	5.0
EFFICIENCY(%)	74.1	82.5	78.7	80.1

Indicated here is the cumulative energy savings that will be realized when the oxygen level is maintained:

ANNUAL ENERGY SAVINGS	
T.O.E.	TONS MAZOUT
5682	5853

5.0 INVESTMENT AND ASSOCIATED ECONOMIC EVALUATION

The estimated total investment and annual cost savings for purchasing and installing the equipment listed above is listed below for both worldwide and local equipment and utility costs.

INVESTMENT COST		ANNUAL ENERGY COST SAVINGS	
$	LE	$	LE
84,380	189,000	657,066	164,164

6.0 CONCLUSIONS

This ECO will provide a rapid and considerable payout.

7.0 RECOMMENDATIONS

This ECO should be implemented at the earliest opportunity. It will be absolutely necessary to instruct the operators of the fired heaters in the proper operation of the above improvements, including equipment maintenance and instrument calibration.

45

ATMOSPHERIC DISTILLATION COMPLEX	Annual Savings, TOE :	9,216
	Annual Savings, $:	1,063,768
	Investment Cost, $:	3,387,960
	Payout: Simple, Yrs :	3.18
STUDY RECOVERY OF VAPORS LOST TO FLARE	DCF, % :	19.5

ECO-02

1.0 PURPOSE

The purpose of this ECO is to recover usable energy, in the form of fuel gas, from the refinery flare system.

2.0 PROCESS DESCRIPTION

A flare gas recovery system normally consists of liquid knock-out, vapor compression, and liquid seal facilities. Recovery of the normal or continuous hydrocarbon vapor flow is now considered attractive from both an economic and environmental viewpoint. Energy savings equivalent to 0.4 wt% of crude throughput per year are typically capable of being recovered. A schematic is shown for a typical refinery flare gas recovery facility. The facility includes a compressor suction drum, two-stage compressor, interstage knock-out drum, and a flare seal drum. The compressor suction and inter-stage drum are provided to knock out liquid droplets before the compressor inlet.

The compressor set is fairly standard, consisting of a compressor and driver, inter and after-coolers, and control facilities. If the recovered vapors are compressed above approximately 4.6 kg/cm^2 g, a two-stage compressor is required. The compressor should be sized for two to three times the normal flare rate in order accommodate large fluctuations in load.

The flare seal drum is designed to provide slight back pressure on the flare header, thus providing suction pressure for the compressor. In addition, the seal prevents air from being drawn down the flare stack. As a further precaution, the portion of the flare system upstream of the seal drum should be purged continuously with fuel gas or nitrogen.

Downstream units, such as the fuel gas treater, must be checked for the increased load it must handle. If no fuel gas treatment is present it may warrant adding the facilities, based on the H_2S content of the recovered gases.

3.0 EQUIPMENT LIST/SIZE

Only a conceptual estimate is possible at this time, as this system requires months of flare gas monitoring and flow recording prior to any design. As an example, a refinery

46

located in Canada is comprised of two crude units with downstream process units of catcracking, hydrocracking, visbreaking, etc. The flare gas recovery compressor utilized is driven by a 400 brake horsepower induction motor compressing vapors with an average MW of 26.5 to about 4.7 kg/cm^2 g. The predicted energy recovery potential was estimated at 0.3 weight percent of crude intake of about 11,800 M^3/day (74,000 B/D).

A second larger refinery, about 19,100 M^3/day, (120,000 B/D) utilizes a two-stage 1100 brake horsepower induction motor to drive its recovery system. This design reflected the operating experience of the earlier system mentioned above and is designed for 2.5 times the normal refinery flare load. This system has operated reliably and independently of process unit turnarounds.

As Alexandria's crude intake falls somewhere between the above two refineries, the compressor size should then fall somewhere between 500 - 1000 brake horsepower. Again, this size can only be a best guess, as a rigorous determination of the flare gas rate must first be attempted, prior to initiation of the design.

4.0 PREDICTED ENERGY SAVINGS

The estimated annual energy savings which can be realized, after implementation of this facility are given below. Figures are conservatively based on 0.2 weight percent of crude recovered from flare gas. Energy recovered from flare vapors can typically be as high as 0.4 weight percent of crude. The crude rate at APC is 576 tons/hr.

ANNUAL ENERGY SAVINGS	
T.O.E.	Tons Mazout
9,216	9,492

5.0 INVESTMENT AND ASSOCIATED ECONOMIC EVALUATION

Due to the lack of measured operating data (ie. no means to collect data is available at the plant at this time) this estimate is of a conceptual nature only. The conceptual investment cost to purchase and install the necessary equipment and materials described herein. The annual cost savings are given below. Figures are based on worldwide and local equipment and utility costs.

INVESTMENT COST		ANNUAL ENERGY COST SAVINGS	
$	LE	$	LE
3,387,960	7,589,030	1,063,768	265,776

6.0 CONCLUSIONS

Flare gas recovery facilities are profitable even for moderately sized refineries. Based on U.S. Gulf Coast perspectives, these facilities will pay out in 3-5 years. In addition, if this fuel is utilized to fire the gas turbine covered in ECO-28, then the energy being lost to flare at present may be harnessed to provide the refinery with a reliable source of electricity.

7.0 RECOMMENDATIONS

As no fixed design can begin to be studied until a flare rate is known, it is recommended that just such a study be performed by APC. This will ascertain whether a flare gas recovery facility can be economically justified for the APC Refinery.

JOINT ENGINEERING GROUP
OEP / FWEC
FOR: APC

REF. 11-36578
DATE MAY 1978
PAGE
REV.

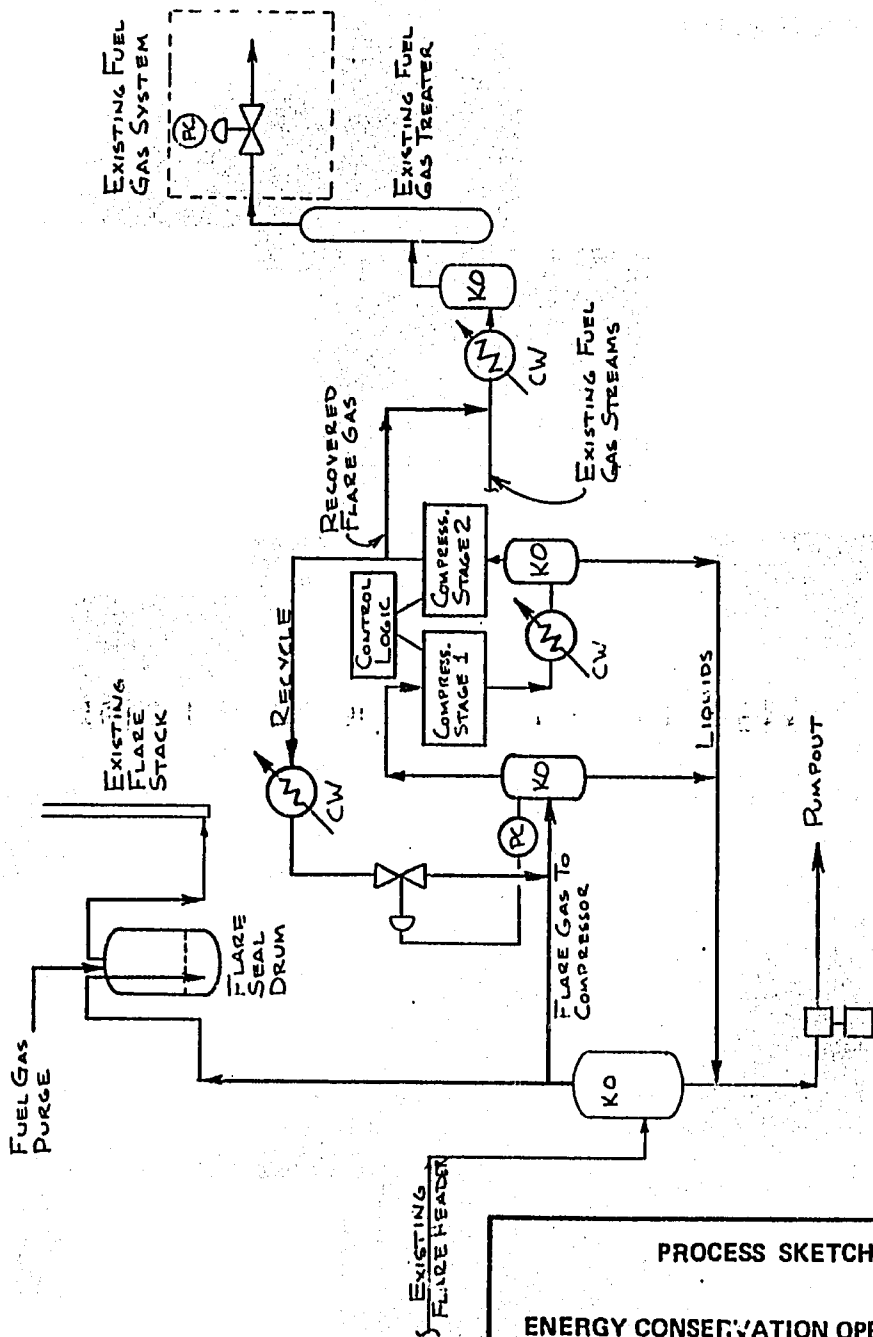

Refinery Flare Gas Recovery Facility

PROCESS SKETCH

ENERGY CONSERVATION OPPORTUNITY:

ECO -02

PLANT Alexandria Petroleum

LOCATION Alexandria, Egypt

LEGEND

EXISTING EQUIPMENT
NEW EQUIPMENT
CW - Cooling Water
KO - Liquid Knock-Out

ATMOSPHERIC DISTILLATION COMPLEX

IDENTIFY VARIOUS CASES OF UNNECESSARY COOLING OF STREAMS THAT ARE THEN REHEATED IN DOWNSTREAM UNITS

Annual Savings, TOE	:	1,588
Annual Savings, $	:	183,347
Investment Cost, $	:	295,800
Payout: Simple, Yrs	:	1.61
DCF, %	:	43.0

ECO-03

1.0 PURPOSE

The purpose of this ECO is to identify and rectify unnecessary cases of cooling and reheating intermediate products. This, in turn, will conserve energy.

2.0 PROCESS DESCRIPTION

The primary source of feedstock to the Lube Complex Vacuum Unit is bottoms from Atmospheric Distillation Unit #4. Atmospheric tower bottoms (fuel oil) is routed from ADU #4 to the Vacuum Unit via tankage. Prior to storage, the atmospheric bottoms is cooled from approximately 130 °C to the storage temperature of 95 °C in the fuel oil cooler, A-402.

The fuel oil is then transferred from tankage to the vacuum unit feed surge drum, FA-1001, for processing. Prior to being charged to the vacuum tower, the fuel oil is preheated by exchange with outgoing products, and brought up to final temperature in the vacuum charge heater, BA-1001.

Through cooling and subsequent reheating of the fuel oil, energy is lost. Much of this heat loss can be avoided by adding a hot bypass line from upstream of A-402 directly to the vacuum unit feed surge drum. It is envisioned that 80% of the bottoms flow be sent hot to the vacuum unit and 20% be sent through cooling and storage. The additional heat which would then be present in the feed would allow more heat to be transferred from hot vacuum product streams to boiler feedwater in the BFW preheaters.

The benefits of this concept is not yet fully appreciated by the vacuum unit personnel, as they require strict control over incoming feedstocks. The viscosity of the fuel oil is an important specification, and has been known to vary due to water content of the crude, unit upsets, etc. As a result, the vacuum unit is run in blocked operation with the viscosity checked at tankage prior to processing.

As fluctuation of viscosity only occurs once to twice a month, it is not felt that this condition warrants abandonment of the hot bypass line between the two units. Tighter control of product specification analysis can signal an impending fluctuation. If the viscosity check is

included as one of the routine shift tasks, sufficient warning will be available to switch the vacuum unit's feed source until the viscosity comes back within acceptable limits. To facilitate this, remote operated control valves may need to be installed in the supply lines to decrease the time required to change over feed sources. These valves can be actuated from the control room.

3.0 EQUIPMENT LIST/SIZE

The only investment required to conserve the vacuum unit feed heat content is a direct header connection from ADU #4 to the vacuum unit. The line will be tied in upstream of the fuel oil cooler, A-402, and routed to the inlet of the vacuum feed surge drum, FA-1001.

Refer to the attached sketch.

Interconnecting fuel oil header:

Diameter, inches :	8.
Length, meters :	1000.
Insulation, mm :	50.

Remote operated valves (ROV's):

2 required - 8"

It is assumed that ADU #4's fuel oil product pump, P-405 A & B, has sufficient head to transfer the product to the vacuum unit feed surge drum. However, a rigorous pressure profile must be made to confirm the suitability of the present pumps, prior to implementation of this ECO.

4.0 PREDICTED ENERGY SAVINGS

The expected annual energy savings after installation of this ECO are given below:

ANNUAL ENERGY SAVINGS	
T.O.E.	TONS MAZOUT
1588	1636

5.0 INVESTMENT AND ASSOCIATED ECONOMIC EVALUATION

The total investment and annual cost savings to implement this ECO are given below. Figures are based on worldwide and local equipment and utility costs.

INVESTMENT COST		ANNUAL ENERGY COST SAVINGS	
$	LE	$	LE
295,800	622,600	183,347	45,808

6.0 CONCLUSIONS

- Energy is lost when intermediate products are cooled and subsequently reheated during processing. It is good engineering practice to minimize these losses by integrating units in order to facilitate direct processing of intermediate products by subsequent downstream units.

7.0 RECOMMENDATIONS

All efforts should be made to integrate ADU #4 and the Lube Oil Complex Vacuum Unit. The energy savings are substantial. Analyses of fuel oil product viscosity will have to be performed more frequently to guard against fluctuation. This ECO should be pursued further.

JOINT ENGINEERING GROUP
OEP / FWEC
FOR: APC

REF. 11-36598
DATE MAY, 1988
PAGE

INSTALLATION OF HOT BYPASS FROM ADU #4 TO VACUUM UNIT

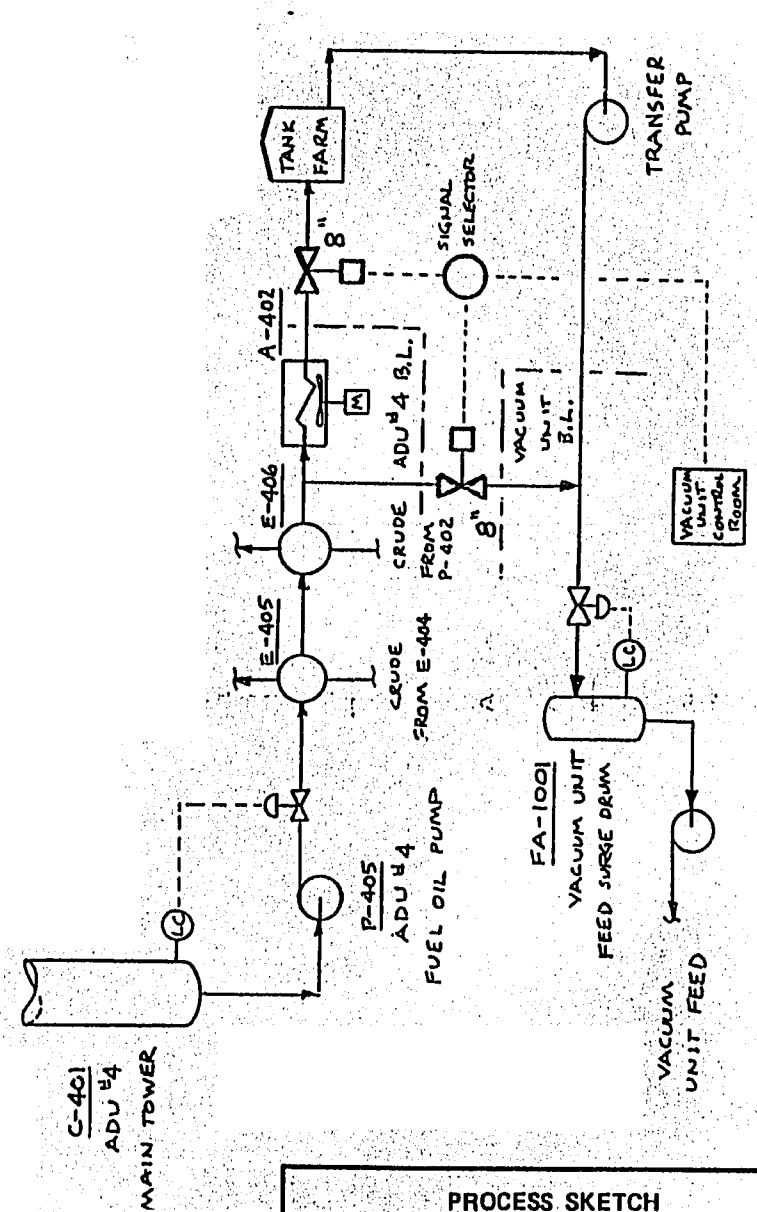

PROCESS SKETCH

ENERGY CONSERVATION OPPORTUNITY:

ECO - 03

PLANT ALEXANDRIA PETROLEUM

LOCATION ALEXANDRIA

LEGEND

EXISTING EQUIPMENT
NEW EQUIPMENT

ATMOSPHERIC DISTILLATION COMPLEX

INSTALL MANUAL CONTROLS TO REDUCE COOLING WATER FLOWS BY RAISING COOLING WATER RETURN TEMPERATURE

Annual Savings, TOE	:	783.
Annual Savings, $	:	133,515.
Investment Cost, $	:	52,280.
Payout: Simple, Yrs	:	0.39
DCF, %	:	--

ECO-04

1.0 PURPOSE

The purpose of this ECO is to decrease the energy consumption of the seawater pumps by maximizing the outlet temperature of seawater exchangers.

2.0 PROCESS DESCRIPTION

Seawater is used in the refinery to satisfy the cooling water requirements. The seawater is supplied by two vertical Worthington pumps. Four pumps are present for this service, but cooling water demands require that only two operate. The pumps supply seawater at a fixed pressure through a pressure control station. A field audit of various cooling water users in the atmospheric unit found most seawater exchangers to be using more seawater than is required. The outlet temperatures from each unit were found to be as follows:

Unit	Supply Temp, °C	Return Temp, °C
ADU #2	24	Not available
ADU #3	24	30
ADU #4	24	40
VRU	24	32

ADU #2 has no provisions to measure the combined cooling water outlet temperature. However, low condenser outlet temperatures were observed. This prompted a survey of all the seawater users for ADU #2 and ADU #3, in order to obtain an overall picture of consumption. The outlet temperature for ADU #4 was acceptable and did not warrant a survey. On the average, the survey indicated many cases where the outlet temperature was very low, indicating inefficient operation.

The cooling water survey for ADU #2 and ADU #3 revealed the following outlet temperatures:

Exchanger Service	Outlet Temperature, oC	
	ADU #2	ADU #3
Main Tower Overhead Condensers:	40,27,27,27,26,n.a.	31,30,33,28

Pre-Flash Tower Overhead Condenser:	28	None
Naphtha Cooler:	Not available	27
Kerosene Cooler:	29	32
Light Gas Oil Cooler:	34	27
Heavy Gas Oil Cooler:	36-40	26
Fuel Oil Coolers:	28,45	26,30

The above data indicate an overuse of cooling water in the exchangers whose outlet temperatures are below 40 °C. In general, the return temperature should be maximized to the limit of 40 °C. This temperature safeguards against salt and algae formation and maximizes utilization of cooling, thereby minimizing consumption.

The total combined cooling water return temperature for the atmospheric complex and lube complex was measured to be 35 °C. This temperature, as well as the circulation rate of approximately 3500 M^3/hr, were used as the basis for estimating the energy savings which could be realized by maximizing the return temperature of the seawater to the API separators.

Keeping records of the cooling water outlet temperatures and manually adjusting the cooling water flowrate by raising the outlet temperature to the maximum limit will reduce overconsumption.

3.0 EQUIPMENT LIST/SIZE

The only equipment necessary to implement this ECO are manual valves and local temperature indicators to be installed in cooling water services which do not already have them. For purposes of estimating, this number has been assumed to be 50 valves and 100 temperature indicators.

4.0 PREDICTED ENERGY SAVINGS

The predicted annual energy savings which can be realized, should this ECO be implemented, are as follows:

ANNUAL ENERGY SAVINGS	
T.O.E.[1]	MWH
783.0	3105

[1]Electricity T.O.E. values include a typical 34% efficiency factor and correspond to generating electricity using a condensing steam turbine system.

5.0 INVESTMENT AND ASSOCIATED ECONOMIC EVALUATION

The total investment and cost associated with installation of this ECO, as well as the annual cost savings are given below. Annual cost savings are based on worldwide and local equipment and utility costs.

INVESTMENT COST		ANNUAL ENERGY COST SAVINGS	
$	LE	$	LE
52,280	117,100	133,515	52,785

6.0 CONCLUSIONS

The return temperatures of some individual seawater users as measured in March 1988 were unusually low (<30 °C). This indicates an overconsumption of cooling water. This consumption can be lowered through manual control of the cooling water consumed by each individual user. The attached plot of energy savings versus cooling water return temperature indicates the incremental savings which could be realized for each degree increase in return temperature.

7.0 RECOMMENDATIONS

This ECO should be implemented during the next shutdown/turnaround. Refer to ECO-33 for energy savings by changing the drive controls of the cooling water pumps.

JOINT ENGINEERING GROUP
OEP / FWEC
FOR: APC

REF. 11-26598
DATE MAY 1988
PAGE
REV.

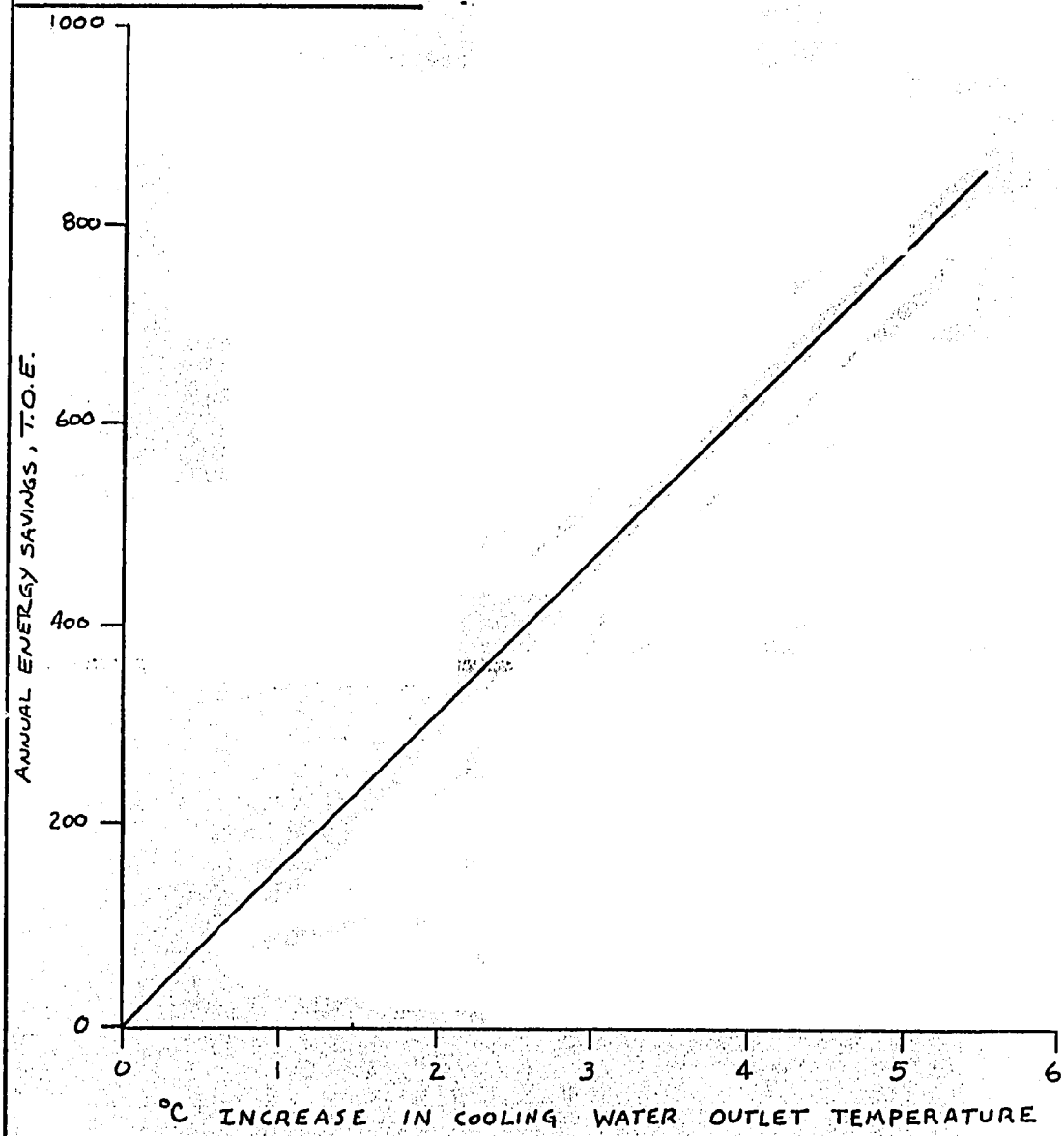

PROCESS SKETCH

ENERGY CONSERVATION OPPORTUNITY:

ECO -04

PLANT ALEXANDRIA PETROLEUM

LOCATION ALEXANDRIA

LEGEND

EXISTING EQUIPMENT
NEW EQUIPMENT

ATMOSPHERIC DISTILLATION COMPLEX

STUDY THE FEASIBILITY OF COMBUSTION AIR PREHEAT FOR PROCESS FIRED HEATERS

Annual Savings, TOE	:	5,019
Annual Savings, $	:	579,402
Investment Cost, $	:	2,866,000
Payout: Simple, Yrs	:	4.95
DCF, %	:	9.0

ECO-05

1.0 PURPOSE

The purpose of this ECO is to study the feasibility of combustion air preheat for the process fired heaters in the atmospheric distillation complex. Overall combustion efficiency can be improved on process fired heaters by exchanging stack gas sensible heat with combustion air and thus decreasing fuel firing rates.

2.0 PROCESS DESCRIPTION

As fuel is fired into the radiant section of a fired heater a portion of the heat that is liberated will be absorbed by the combustion air. The combustion air must be brought up to the theoretical flame temperature before combustion can occur. When combustion air is supplied at higher temperatures, less heat must be supplied or used to heat up the combustion air. The result is that less fuel need be fired into the furnace.

Combustion air can be preheated by exchanging heat with hot flue gases that leave the stack of the furnace. Frequently, a cold process sink does not exist to cool down the flue gases and thus sensible heat is lost to the atmosphere. Ambient combustion air provides a good cold sink.

A combustion air preheater is an exchanger that does not allow leakage of flue gas into the combustion air or vice versa. Additionally, a combustion air preheater should not create considerable pressure losses in the air or flue gas paths.

The feasibility of an air preheat system is dependent on the amount of heat that is available for recovery to offset the equipment cost. In general, high stack temperatures and high heat load furnaces are the best candidates for air preheaters.

As either the stack temperature or the furnace load becomes smaller it is difficult to justify the investment in such equipment.

3.0 EQUIPMENT LIST/SIZE

Please note that the equipment listed below is for only one air preheat system although the investment cost represents

the total price for four air preheat systems. Refer to the attached sketch.

1(one) forced draft fan

1(one) induced draft fan

1(one) cast iron recuperative air preheater

Replacement combination oil and gas forced draft burners

Air and flue gas duct work

Associated instrumentation and electricals

4.0 PREDICTED ENERGY SAVINGS

The efficiency when the stack temperature for each of the fired heaters is reduced to 160 °C will be approximately 90.3 percent. The following tabulation shows the current stack temperature, tons of mazout and T.O.E. savings for the individual heaters when the stack temperature is reduced to 160 °C:

	CDU #2	CDU #3	CDU #4	VRU
STACK TEMP. (°C)	304	362	299	457
TONS MAZOUT	1599	1499	1659	413
T.O.E.	1552	1455	1610	402

The following shows the cumulative fuel savings:

ANNUAL ENERGY SAVINGS	
T.O.E.	TONS MAZOUT
5019	5170

5.0 INVESTMENT AND ASSOCIATED ECONOMIC EVALUATION

The estimated investment and annual cost savings for purchasing and installing the equipment listed above for both worldwide and local equipment and utility costs for the individual fired process heater air preheat systems are listed here:

	CDU #2	CDU #3	CDU #4	VRU
COST SAVINGS($)	179,200	167,993	185,924	46,285
COST SAVINGS(LE)	44,772	41,972	46,452	11,564
INVESTMENT COST($)	837,000	831,300	702,500	495,200
INVESTMENT COST(LE)	1,874,880	1,862,112	1,573,600	1,109,248
SIMPLE PAYOUT($/$)	4.7	4.9	3.8	10.7

The estimated total investment and annual cost savings for purchasing and installing the equipment listed above is listed below for both worldwide and local equipment and utility costs.

INVESTMENT COST		ANNUAL ENERGY COST SAVINGS	
$	LE	$	LE
2,866,000	6,419,840	579,402	144,760

6.0 CONCLUSIONS

CDU #2 and #3 show a marginal payout while CDU #4 shows a slightly better payout. The VRU shows a poor payout due to the low firing load. This ECO should be investigated on detail with a furnace manufacturer.

7.0 RECOMMENDATIONS

This ECO should be investigated further and possibly air preheat systems should be added to CDU #2, #3, and #4.

60

JOINT ENGINEERING GROUP
OEP / FWEC
FOR: APC

REF. 11-36598
DATE MAY 1988
PAGE
REV.

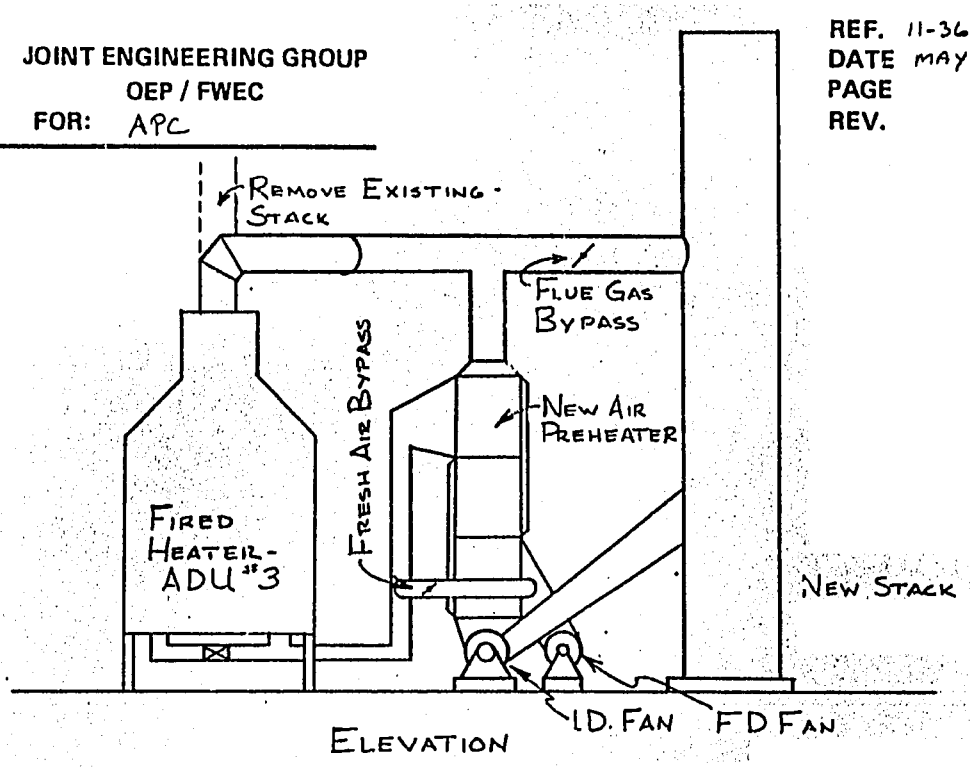

ELEVATION

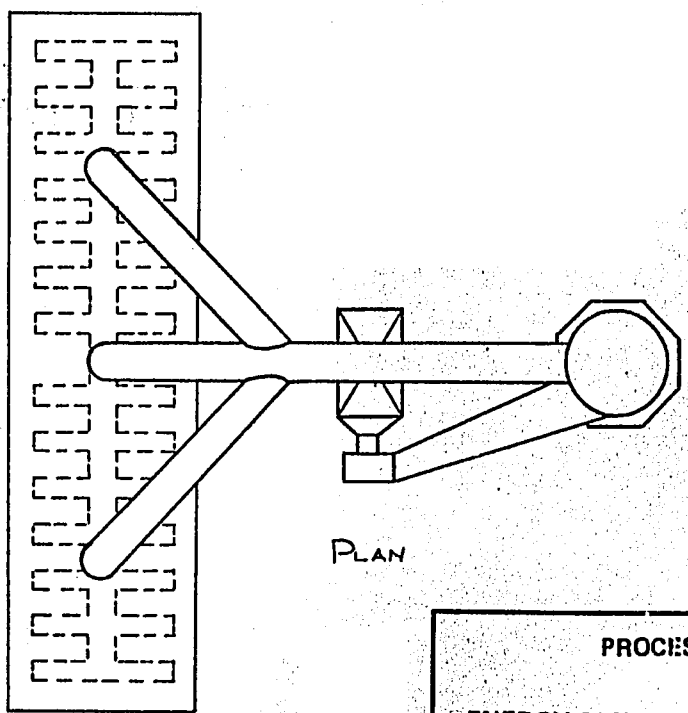

PLAN

PROCESS SKETCH

ENERGY CONSERVATION OPPORTUNITY:
ECO 05

PLANT ALEXANDRIA PETROL
LOCATION ALEXANDRIA, EGYPT

LEGEND

EXISTING EQUIPMENT
NEW EQUIPMENT

61

ATMOSPHERIC DISTILLATION
COMPLEX

ECO-06

(ECO NUMBER NOT USED)

ATMOSPHERIC DISTILLATION UNIT

INSTALL SOUR WATER RECOVERY SYSTEM AND INVESTIGATE INTEGRATION WITH EXISTING SOUR WATER STRIPPER IN LUBE COMPLEX

Annual Savings, TOE	:	39.5
Annual Savings, $	:	231,612.
Investment Cost, $	:	211,700.
Payout: Simple, Yrs	:	0.91
DCF , %	:	--

ECO-07

1.0 PURPOSE

Sour water generated through stripping steam used in the atmospheric distillation towers is currently wasted to sewer. This water should be recovered and re-used in the desalters, once stripped of hydrogen sulfide. The use of stripped sour water in the desalters will negate the current use of treated drinking water, boiler feed water and steam to desalt the crude. An energy savings is realized as the stripped sour water is already at the required temperature, while fresh water must be heated.

2.0 PROCESS DESCRIPTION

At present, treated water is heated and routed to the desalters. Salts-laden water is sent to the sewer from the desalter. The sour water removed from the boots of the atmospheric tower overhead drums is also sent to sewer. No facilities exist to collect sour water, except to route it to the API Separator prior to discharge to the sea.

The revamped sour water system will include piping to a surge drum, and a pump to supply sufficient head to transport the sour water through a new header to the existing sour water stripper. This sour water stripper,which is located in the lube complex, was designed to accommodate a throughput of 34 tons of sour water per hour. The average flowrate presently is 20-25 tons per hour. Accordingly, excess capacity is available to accommodate the additional amount of approximately 13 tons per hour which will be realized once the atmospheric unit sour water is included.

3.0 EQUIPMENT LIST/SIZE

To incorporate the atmospheric unit sour water into the existing sour water facility, the following equipment is required:

Sour water surge drum:

- 1250 mm diameter x 2500 mm T/T,
- Killed carbon steel,
- 65 oC design temperature,
- 3.5 Kg/cm^2 g (343 kPa) design pressure

63

Sour water pump: (two required)

17.0 ^{3}/hr design capacity
60 M differential head
7.0 Kg/cm^2 g (685 kPa) discharge pressure
0.4 Kg/cm^2 g (39 kPa) suction pressure
316 SS case and impeller

Sour water header:

4" pipe killed carbon steel
1000 M Length

4.0 PREDICTED ENERGY SAVINGS

The savings realized after implementation of the new sour water system are given below:

Annual Energy Savings	
T.O.E.	Tons mazout
39.5	40.7

5.0 INVESTMENT AND ASSOCIATED ECONOMIC EVALUATION

The costs associated with purchase and installation of the required equipment and piping are given below:

Figures are based on worldwide and local equipment and utility costs.

Investment Cost		Annual Cost Savings	
$	LE	$	LE
211,700	474,200	231,612	61,265

6.0 CONCLUSIONS

It is normal refinery practice to recover sour water, strip it, and reuse it in the crude desalters. The present operation of directing the flow to the sewer results in the extra costs associated with the use of fresh and treated water for desalting. This approach needs to be improved.

7.0 RECOMMENDATION

This ECO should be implemented and does not require any turnaround/shutdown to make the above modification.

JOINT ENGINEERING GROUP
OEP / FWEC
FOR:

REF. 11-36598
DATE MAY 1988
PAGE
REV.

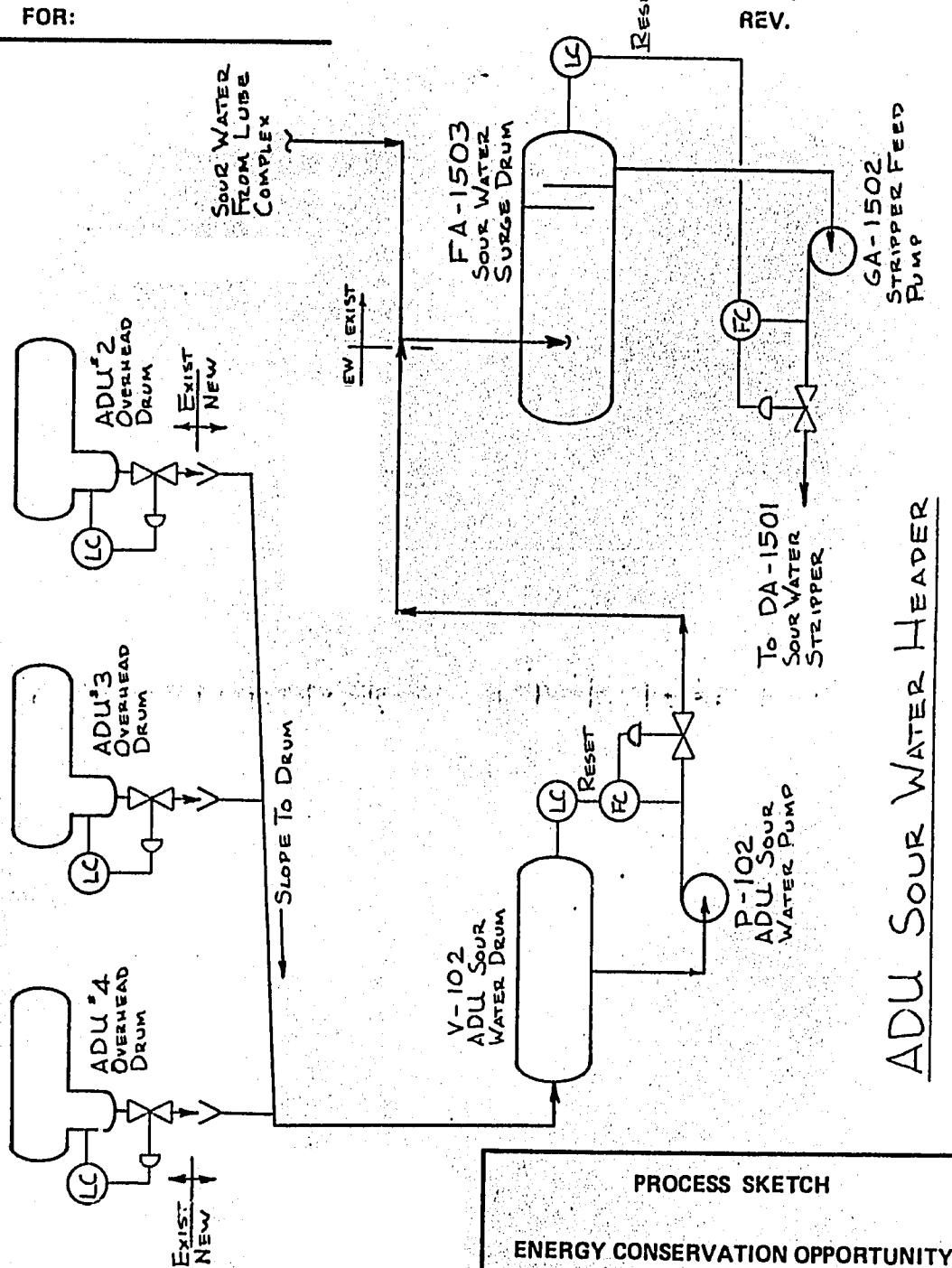

LEGEND

EXISTING EQUIPMENT
NEW EQUIPMENT

PROCESS SKETCH

ENERGY CONSERVATION OPPORTUNITY:

ECO -07

PLANT Alexandria Petroleu

LOCATION Alexandria, Egypt

65

ATMOSPHERIC DISTILLATION COMPLEX

INVESTIGATE ADU #2 CRUDE PREHEAT TRAIN FOR OPTIMUM HEAT RECOVERY

Annual Savings, TOE	:	1,215
Annual Savings, $	:	140,200
Investment Cost, $	:	49,400
Payout: Simple, Yrs	:	0.35
DCF , %	:	--

ECO-08

1.0 PURPOSE

The purpose of this ECO is to optimize the crude preheat train of ADU #2. Improving the transfer of heat from product streams and pumparounds to the crude feed saves fuel in the charge heater. Energy savings is realized with each additional degree of preheat obtained upstream of the charge heater.

2.0 PROCESS DESCRIPTION

Crude from battery limits is preheated through exchange with hot product streams and tower pumparounds. The preheated crude feed is then brought to its final feed temperature in the crude charge heater. The amount of fuel oil fired in the charge heater is inversely proportional to the amount of crude preheat obtained. Accordingly, any increase in feed preheat temperature results in fuel reduction benefits. The fuel savings will pay for any modifications made to the exchanger train.

The feed preheat train in ADU #2 involves exchange with four product streams and two pumparounds. One of these services, the ICR/Crude exchanger, E-203, offers an opportunity for improved heat recovery. The crude outlet temperature from this exchanger can be increased 14 °C through modifications. The modifications would entail addition of a second shell to this service. The final crude preheat temperature resulting from this change will increase from approximately 195 °C to 207 °C.

As all the exchanger shells in ADU #2 are of equal area, it is possible that a spare may be available somewhere in the unit. For estimating purposes, however, the cost of a new exchanger has been included.

3.0 EQUIPMENT LIST/SIZE

The aditional shell which will be added to the ICR/Crude service, E-203, will be of the following design:

Heat Exchanger - one required

Area , M^2	:	100
Design Temperature	:	260 °C Shell 110 °C Tubes
Design Pressure	:	12.0 Kg/cm^2g (1620 kPa) Shell 18.0 Kg/cm^2g (1079 kPa) Tubes

4.0 PREDICTED ENERGY SAVINGS

The anticipated annual energy savings which will be realized after installation of this ECO are as follows:

Annual Energy Savings	
T.O.E.	Tons mazout
1215	1251

5.0 INVESTMENT AND ASSOCIATED ECONOMIC EVALUATION

The total investment cost to purchase and install the required equipment and materials are given below, as well as the annual cost savings.

Figures are based on worldwide and local equipment and utility costs.

Investment Cost		Annual Cost Savings	
$	LE	$	LE
49,400	110,600	140,200	35,028

6.0 CONCLUSIONS

Implementation of this ECO will result in a direct fuel savings which will result in a rapid payout of the required investment cost.

7.0 RECOMMENDATIONS

This ECO should be implemented following a more rigorous analysis of the crude preheat scheme.

ADU #2 CRUDE PREHEAT TRAIN

EXPECTED TEMPERATURE PROFILES AFTER ADDITION OF ANOTHER SHELL TO EXCHANGER E-203

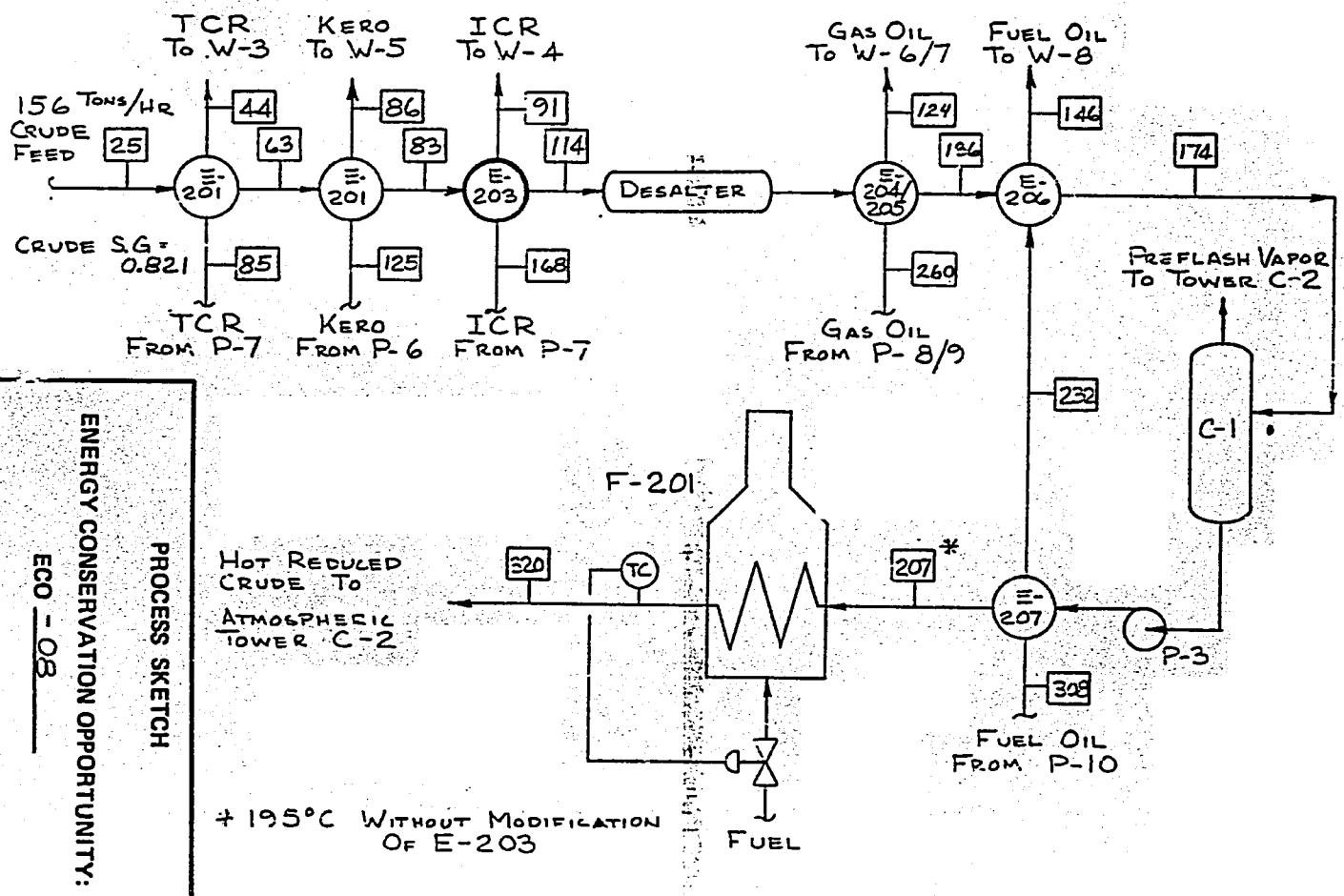

LEGEND

EXISTING EQUIPMENT

NEW EQUIPMENT

°C

JOINT ENGINEERING GROUP

OEP / FWEC

FOR: APC

REF. 11-26598

DATE MAY 1988

PAGE

REV.

PROCESS SKETCH

ENERGY CONSERVATION OPPORTUNITY: ECO - 08

PLANT ALEXANDRIA PETROLEUM

LOCATION ALEXANDRIA, EGYPT

ATMOSPHERIC DISTILLATION COMPLEX

INVESTIGATE ADU #3 CRUDE PREHEAT TRAIN FOR OPTIMUM HEAT RECOVERY

Annual Savings, TOE	:	1,367
Annual Savings, $	:	157,795
Investment Cost, $	:	96,400
Payout: Simple, Yrs	:	0.61
DCF , %	:	--

ECO-09

1.0 PURPOSE

The purpose of this ECO is to optimize the crude preheat train of ADU #3. Improving the transfer of heat from product streams and pumparounds to the crude feed saves fuel in the charge heater. Energy savings is realized with each additional degree of preheat obtained upstream of the charge heater.

2.0 PROCESS DESCRIPTION

Crude from battery limits is preheated through exchange with hot product streams and tower pumparounds. The preheated crude feed is then brought to its final feed temperature in the crude charge heater. The amount of fuel oil fired in the charge heater is inversely proportional to the amount of crude preheat obtained. Accordingly, any increase in feed preheat temperature results in fuel reduction benefits. The fuel savings will pay for any modifications made to the exchanger train.

The feed preheat train in ADU #3 involves exchange with four product streams and two pumparounds. One of these services, the Fuel Oil/Crude exchanger E-306, offers an opportunity for improved heat recovery. The crude outlet temperature from this exchanger can be increased 9 °C through modifications. The modifications would entail addition of a second shell to this service. The final crude preheat temperature resulting from this change will increase from approximately 219 °C to 228 °C.

As all the exchanger shells in ADU #3 are of equal area, it is possible that a spare may be available somewhere in the unit. For estimating purposes, however, the cost of a new exchanger has been included.

3.0 EQUIPMENT LIST/SIZE

The aditional shell which will be added to the Fuel Oil/Crude service, E-306, will be of the same design as the existing shells:

Heat Exchanger - one required

Area , M^2	:	112
Design Temperature	:	270 °C Shell 270 °C Tube
Design Pressure	:	25.0 Kg/cm^2g (2452 kPa) Shell 21.0 Kg/cm^2g (2059 kPa) Tubes

4.0 PREDICTED ENERGY SAVINGS

The anticipated annual energy savings which will be realized after installation of this ECO are as follows:

Annual Energy Savings	
T.O.E.	Tons mazout
1367	1408

5.0 INVESTMENT AND ASSOCIATED ECONOMIC EVALUATION

The total investment cost to purchase and install the required equipment and materials are given below, as well as the annual cost savings.

Figures are based on worldwide and local equipment and utility costs.

Investment Cost		Annual Cost Savings	
$	LE	$	LE
96,400	215,900	157,795	39,424

6.0 CONCLUSIONS

Implementation of this ECO will result in a direct fuel savings which will result in a rapid payout of the required investment cost.

7.0 RECOMMENDATIONS

This ECO should be implemented following a more rigorous analysis of the crude preheat scheme.

ADU #3 Crude Preheat Train

Expected Temperature Profiles After Addition Of Two Shells To Exchanger E-306

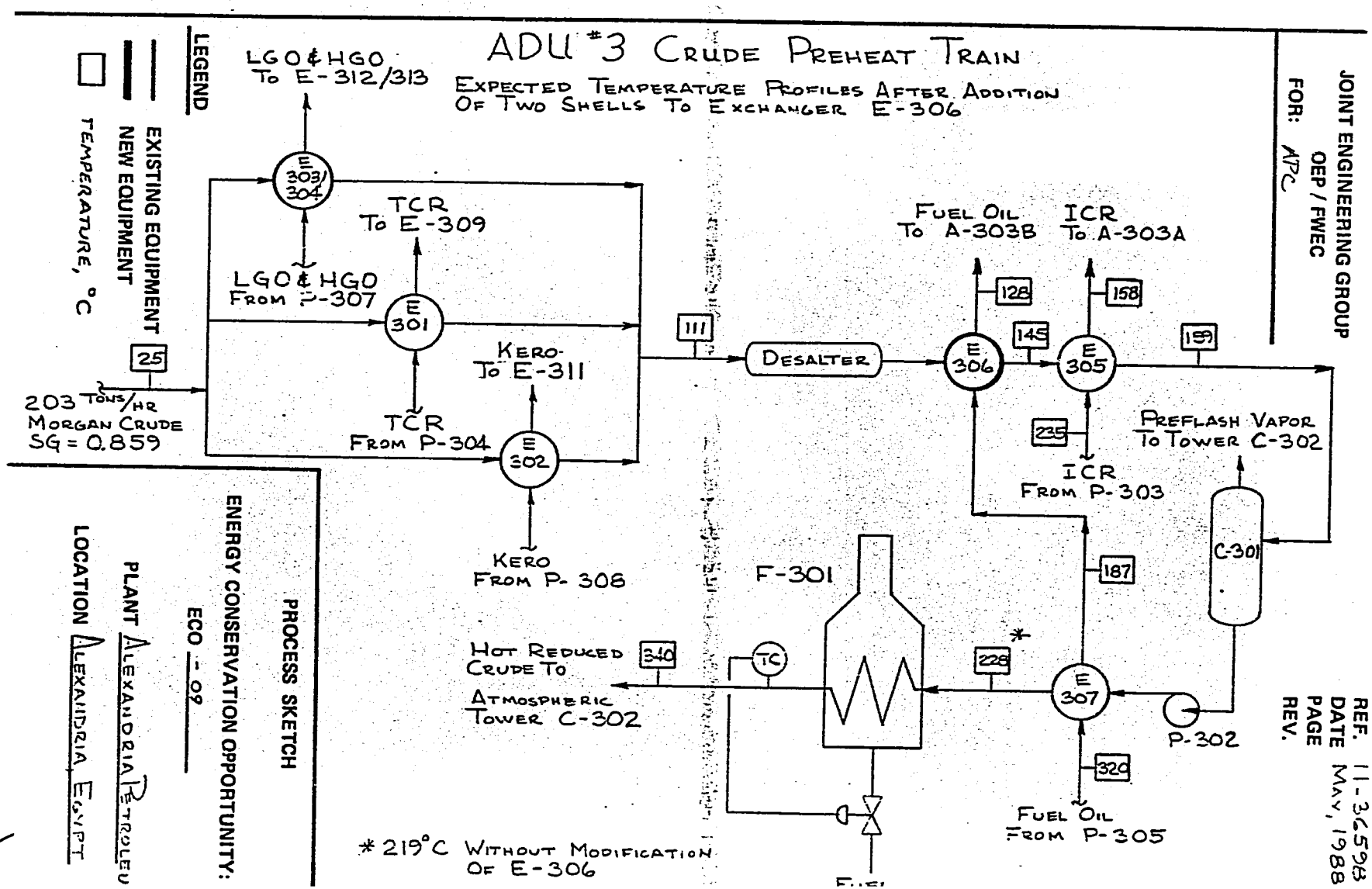

A1

ATMOSPHERIC DISTILLATION COMPLEX

INVESTIGATE ADU #4 CRUDE PREHEAT TRAIN FOR OPTIMUM HEAT RECOVERY

Annual Savings, TOE	:	262
Annual Savings, $	:	30,260
Investment Cost, $	:	45,760
Payout: Simple, Yrs	:	1.51
DCF , %	:	--

ECO-10

1.0 PURPOSE

The purpose of this ECO is to optimize the crude preheat train of ADU #4. Improving the transfer of heat from product streams and pumparounds to the crude feed saves fuel in the charge heater. Energy savings is realized with each additional degree of preheat obtained upstream of the charge heater.

2.0 PROCESS DESCRIPTION

Crude from battery limits is preheated through exchange with hot product streams and tower pumparounds. The preheated crude feed is then brought to its final feed temperature in the crude charge heater. The amount of fuel oil fired in the charge heater is inversely proportional to the amount of crude preheat obtained. Accordingly, any increase in feed preheat temperature results in fuel reduction benefits. The fuel savings will pay for any modifications made to the exchanger train.

The feed preheat train in ADU #4 involves exchange with three product streams and two pumparounds. One of these services, the bottom pumparound exchanger, E-404, offers an opportunity for improved heat recovery. The bottom pumparound exchanger, E-404, is currently out of service. This condition is due to observed contamination of the solar product with mazout. Off-spec product is experienced whenever the unit is processing Belayim crude and the bottom pumparound is in service. APC believes that contamination is caused by the close proximity of the pumparound return nozzle to even the uppermost solar drainoff tray. As a result, it was decided not to utilize the bottom pumparound when processing Belayim crude.

Further investigation reveals that the top pumparound is designed for 146 tons per hour of circulation, but is only operated at approximately 60 tons per hour. This lower rate decreases the amount of heat removed from the tower at this point, and decreases the amount of heat available for crude preheat in the top pumparound exchanger, E-401. If 60 tons per hour was the top pumparound rate when contamination of solar product was experienced, the contamination may have been caused by insufficient reflux between the solar drawoff and the bottom pumparound return. Removing the pumparound from service has improved internal reflux within the tower. From a standpoint of energy conservation, however, it has

12

forced the heat removal to a colder part of the tower where it must be wasted to air or cooling water, and can not be used for useful crude preheat.

Due to a reduction in top pumparound, and consequently a reduction in feed preheat, additional heat was needed to reach the required desalting temperature. A solution was made through modifications to the second fuel oil exchanger, E-406. This was accomplished by a series of bypass valves, and allowed the crude to flow through the first two shells of the second Fuel Oil Exchanger, E-406, then through the desalter and preflash tower, and finally through the remaining shells of E-406. Further crude preheat was gained in the first Fuel Oil Exchanger, E-405, and the bulk of the required heat was supplied by the Crude Heater, F-401.

Without the bottom pumparound exchanger in service, and with a reduced top pumparound circulation rate, the crude preheat train is incapable of bringing the crude to the design preheat temperature of 235 °C upstream of F-401. The crude outlet temperature from the last preheat exchanger is currently 180 °C. This requires harder firing of the crude heater, F-401, and reflects an uneconomical and inefficient operation.

Based on the present inefficient operation of ADU #4, further investigation and optimization of the current crude preheat scheme would be futile. Energy conservation for this unit should be focused on the tower itself, and why it is not performing as designed. This work requires an entire process design computer simulation/optimization study of the tower, its ancillaries, and all of the associated equipment in the unit. Foster Wheeler performs these front-end studies regularly. A computer simulation of the unit is created to give the optimum operating conditions. This computer model would also reveal why the solar product is being contaminated with mazout and what the optimum amount of pumparound and internal reflux should be to achieve proper product specifications. The process study would also describe what modifications, if any, must be made to the tower intervals and/or operating variables to improve/optimize the present energy inefficient operation. This type of study can be performed at a reasonable cost and is generally offset by the savings in fuel, which will be realized once the preheat train and tower are optimized.

In conclusion, the basis of this ECO reflects the amount of energy which might be saved if the preheat train and tower were revamped and operated so that the design preheat outlet temperature of 235 °C is achieved.

Additionally, the cost of adding bypass valves for exchanger services, E-401, E-402 and E-403 have been included. At present, the shell gaskets for these services have been known to leak regularly. As there are no bypass valves between the multiple shells of these services, a leak

73

requires that the whole exchanger service be bypassed. This is a very energy inefficient crude preheat train operation.

3.0 EQUIPMENT LIST/SIZE

The following equipment will be required to facilitate bypassing of crude amongst individual exchanger shells of E-401, E-402, and E-403.

Valves Required:	6" - 12 total
	8" - 12 total

No estimation has been made for the modification, if any, which may be required following a rigorous process front-end optimization study nor the cost of the study.

4.0 PREDICTED ENERGY SAVINGS

The maximum achievable annual energy savings from efficient preheat train and column operations are given below. Also included are the savings as a result of adding bypass valves.

	Annual Energy Savings	
	T.O.E.	Tons mazout
Improve column and preheat operation	7980	8219
Add valves	262	270
	8242	8489

5.0 INVESTMENT AND ASSOCIATED ECONOMIC EVALUATION

The total investment cost to purchase and install the bypass valves are given below.

The investment cost for a front-end study, and any modifications that that may be required as a result of this study are not included. The initial stages of inquiry should be made by APC to obtain these figures.

The annual cost savings figures given below reflect the savings which will be realized after installation of the bypass valves and incorporation of any modifications which may be recommended as a result of a front-end study.

Figures are based on worldwide and local equipment and utility costs.

	Investment Cost		Annual Cost Savings	
	$	LE	$	LE
Improve column and preheat operation	Later	Later	921,102	230,132
Add valves	45,760	102,500	30,260	7,560

74

6.0 CONCLUSIONS

The operation of ADU #4 does not appear to be an energy efficient operation. Every effort should be made to optimize the present crude processing scheme based on the known feed slates. Performing a crude preheat study, based on the present unit operation, is not warranted at this time.

Installation of bypass valves will allow partial operation of the crude preheat exchanger services during maintenance and will result in an energy savings over the present operating scheme. Both of the above investments will provide a quick and rapid payout in the form of direct fuel savings.

7.0 RECOMMENDATIONS

This ECO should be implemented.

JOINT ENGINEERING GROUP
OEP / FWEC
FOR: APC

REF. 11-36598
DATE MAY, 1988
PAGE
REV.

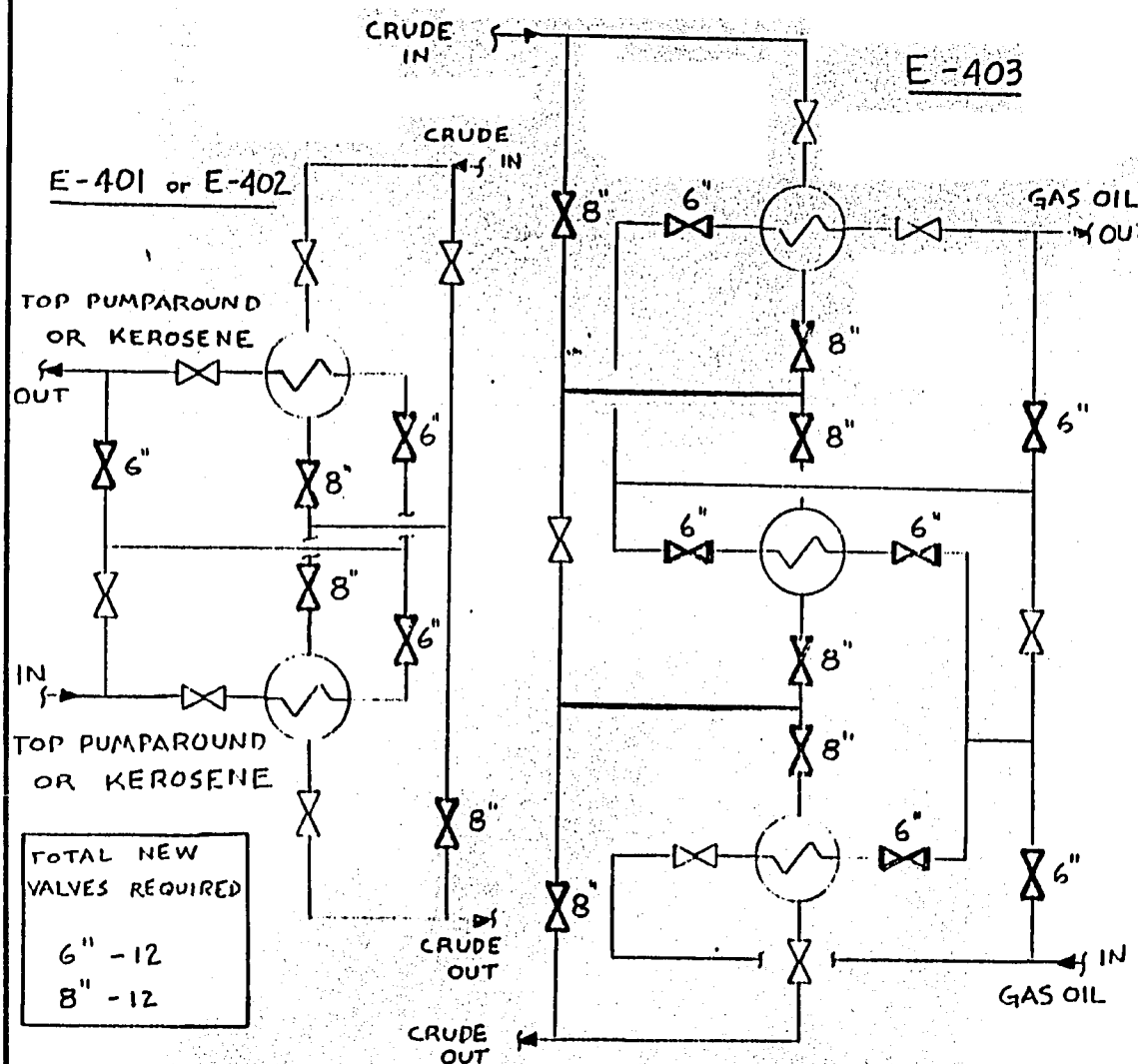

TOTAL NEW VALVES REQUIRED	
6"	12
8"	12

ADDITION OF BYPASS VALVES TO E-401, E-402, & E-403

LEGEND

EXISTING EQUIPMENT
NEW EQUIPMENT

PROCESS SKETCH

ENERGY CONSERVATION OPPORTUNITY:

ECO - 10

PLANT ALEXANDRIA PETROLEUM

LOCATION ALEXANDRIA

ATMOSPHERIC DISTILLATION COMPLEX

INVESTIGATE THE FEASIBILITY OF INTEGRATING SOURCES AND SINKS SUITABLE TO ESTABLISH A HOT OIL BELT

Annual Savings, TOE	:	979.
Annual Savings, $	:	113,079.
Investment Cost, $	:	625,200.
Payout: Simple, Yrs	:	5.53
DCF , %	:	7.0

ECO-11

1.0 PURPOSE

The purpose of this ECO is to optimize operation of the vapor recovery unit furnace by utilizing its excess capacity to preheat reduced crude in ADU #4, via a new hot oil belt. The heating medium for the hot oil belt has been assumed to be vacuum gas oil.

2.0 PROCESS DESCRIPTION

The vapor recovery unit stripper, C-901, uses a fired heater, F-901, to supply the energy required to reboil the tower. This furnace is operating at very low capacity (about 30 percent of design) and as a result is very inefficient. The stack temperature for the furnace is extremely high, which indicates energy is being lost. In order to optimize operation of this fired heater and increase its efficiency, the service will be modified. Rather than heating the stripper bottoms directly, the furnace will heat a hot oil medium. The hot oil will be circulated to reboil the vapor recovery unit stripper and transfer the remainder of available energy to preheat reduced crude in ADU #4.

To facilitate incorporation of this new hot oil circuit, a new exchanger, E-1001, will be designed to handle the normal duty of the VRU stripper. This duty is based on the fuel oil consumption of the furnace adjusted by the efficiency which was measured in the field. No extra exchange facilities (i.e. steam trim reboiler) have been included for purposes of this estimate; however, extra area is included in the reboiler design. In ADU #4, new exchanger facilitates, E-1002, will be added to supplement those of existing exchanger E-404. This exchanger was originally intended to exchange heat between the reduced crude and bottom pumparound streams. But since the crude charged to this tower is heavier than that of design, use of this bottom pumparound has been discontinued, due to observed contamination of the solar product. To prevent off-spec solar product, exchanger E-404 is bypassed and the bottom pumparound circuit is not used when the unit is processing Belayim (normal feed). The bottom pumparound is only used when handling lighter feeds. As a result, energy can be conserved if exchanger area is added to allow integration of this unit into a hot oil belt. This will save consumption of fuel oil in the ADU #4 charge heater and

11

increase the efficiency of the VRU furnace as well.

Additional energy can be conserved by preheating the hot oil with waste heat upstream of the furnace. This can be accomplished through heat exchange with product streams that throw their heat to air or sea water. Should a suitable preheat source be incorporated into the hot oil belt, the economics become even more attractive. However, no credit for preheat has been assumed for purposes of estimating this ECO.

3.0 EQUIPMENT LIST/SIZE

The following equipment items are necessary to allow integration of the vapor recovery unit stripper reboiler and the ADU #4 reduced crude exchanger into a hot oil belt. The existing convection section of F-901 is satisfactory.

Refer to the attached sketch.

Exchangers:

Stripper Reboiler E-1001

Area :	325 M^2
Number Required :	1
Design Temperature:	225 °C Shell 285 °C Tube
Design Pressure :	16 Kg/cm^2g (1569 kPa) Tube 23 Kg/cm^2g (2255 kPa) Shell

Reduced Crude Exchanger E-1002

Area :	525 M^2 each shell
Number required:	2
Design Temperature :	255 °C Shell 205 °C Tube
Design Pressure :	16 Kg/cm^2 g (1569 kPa) Shell 19 Kg/cm^2 g (1863 kPa) Tube (estimate)

Pumps :

Circulation Pump P-1001

Flowrate : 185 M^3/hr

Differential Pressure: 9.5 Kg/cm^2 g (932 kPa)

Vessels :

Surge Drum V-1001

Diameter : 1.9 M
Length : 6.10 M
Design Pressure: 3.5 Kg/cm^2 g (343 kPa)
Design Temperature: 285 ^oC

Piping :

10" pump suction : 4 M
8" pump discharge : 300 M

4.0 PREDICTED ENERGY SAVINGS

The anticipated energy savings which will be realized after implementation of this ECO are as follows.

Annual Energy Savings	
T.O.E.	Ton mazout
979	1009

5.0 INVESTMENT AND ASSOCIATED ECONOMIC EVALUATION

The estimated total investment cost to purchase and install the necessary materials and equipment given above, as well as the annual cost savings, are given below.

Figures are based on worldwide and local equipment and utility costs.

Investment Cost		Annual Cost Savings	
$	LE	$	LE
625,200	1,400,400	113,079	28,252

6.0 CONCLUSIONS

By converting the VRU furnace from strictly a reboiler to a hot oil belt heater, the overall efficiency of heat transfer will increase and the overall refinery fuel oil consumption will be lowered.

7.0 RECOMMENDATIONS

This ECO should only be implemented after investigation of the ADU #4 bottom pumparound. If it is found that no modifications can restore the bottom pumparound service, then this ECO should be pursued as the next attractive solution. The payout period will be reduced even further as additional sources of heat are identified.

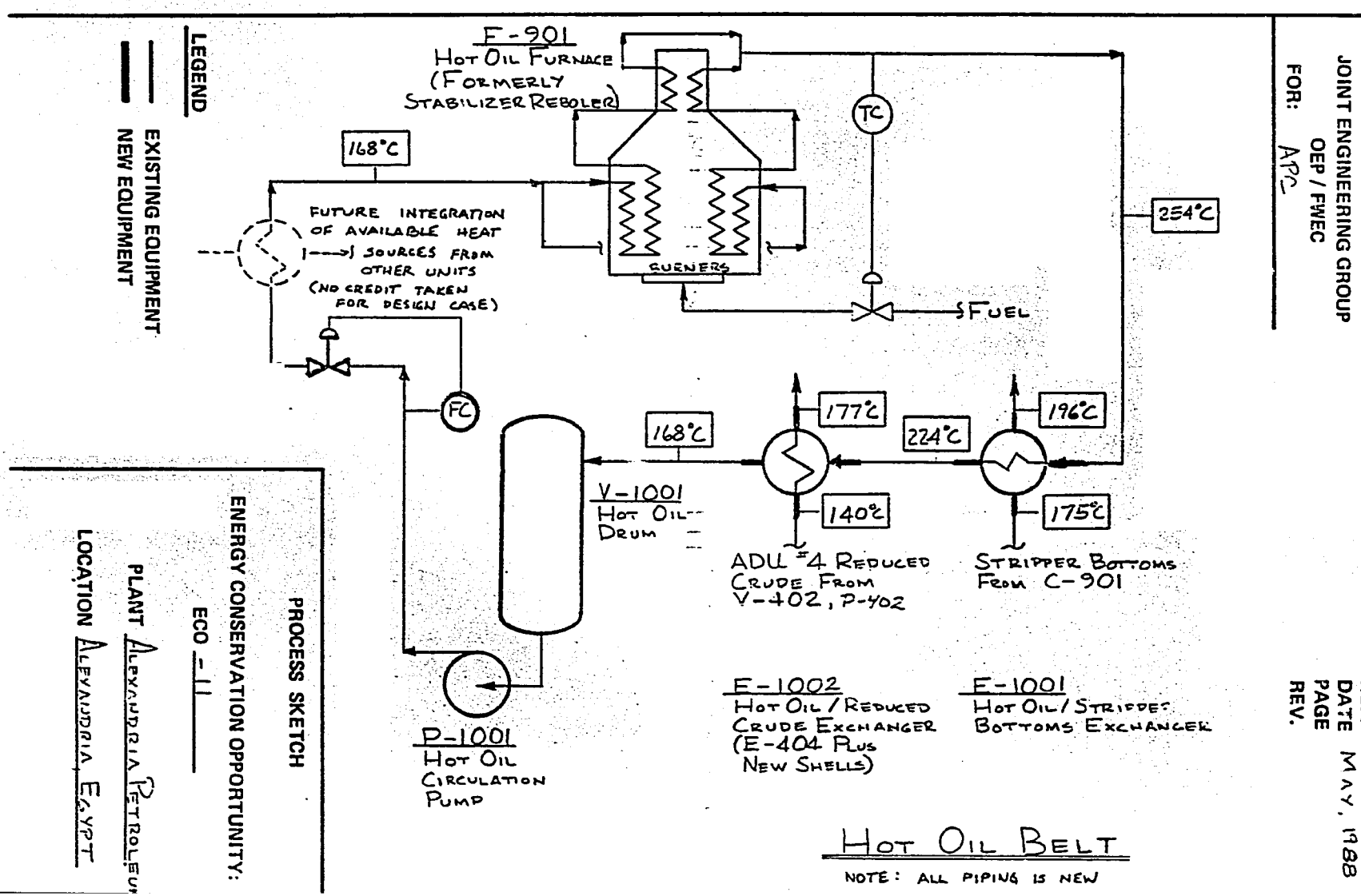
JOINT ENGINEERING GROUP
OEP / FWEC
FOR: APC
REF. 11-36598
DATE MAY, 1988
PAGE
REV.
F-901
HOT OIL FURNACE
(FORMERLY
STABILIZER REBOILER)
BURNERS
TC
FUEL
254°C
168°C
FUTURE INTEGRATION
OF AVAILABLE HEAT
SOURCES FROM
OTHER UNITS
(NO CREDIT TAKEN
FOR DESIGN CASE)
FC
168°C
V-1001
HOT OIL
DRUM
177°C
140°C
224°C
196°C
175°C
ADU #4 REDUCED
CRUDE FROM
V-402, P-402
STRIPPER BOTTOMS
FROM C-901
P-1001
HOT OIL
CIRCULATION
PUMP
E-1002
HOT OIL / REDUCED
CRUDE EXCHANGER
(E-404 PLUS
NEW SHELLS)
E-1001
HOT OIL / STRIPPER
BOTTOMS EXCHANGER
HOT OIL BELT
NOTE: ALL PIPING IS NEW
LEGEND
EXISTING EQUIPMENT
NEW EQUIPMENT
PROCESS SKETCH
ENERGY CONSERVATION OPPORTUNITY:
ECO - 11
PLANT ALEXANDRIA PETROLEUM
LOCATION ALEXANDRIA, EGYPT

ATMOSPHERIC DISTILLATION COMPLEX

VERIFY ADEQUACY OF INSULATION THICKNESS OF CRUDE TOWERS

Annual Savings, TOE	:	5.2
Annual Savings, $	:	605.
Investment Cost, $	:	16,356.
Payout: Simple, Yrs	:	27.0
DCF , %	:	<1.0

ECO-12

1.0 PURPOSE

The purpose of this ECO is to add sufficient insulation on the crude towers to conserve heat. Loss of heat from the tower will eventually lead to harder firing of the furnace, as the lost energy is unavailable for distillation.

2.0 PROCESS DESCRIPTION

The three crude towers are currently insulated with 75 mm of insulation for ADU #2 and #3, and 87.5 mm of insulation for ADU #4. Based on the crude charge heater outlet temperature, an evaluation of the insulation thickness was performed using the Heatalyzer computer program for insulation design. The program calculates the economic thickness of insulation and also the thickness that minimizes the cost of installation and materials. As insulation installation is one of the less expensive investment opportunities, the payback is generally very good for bare surfaces. However, adding new insulation to existing insulation in good condition may not always be economical.

The results obtained from the computer model reveal the optimum thickness to be 100 mm for a flash zone temperature of 290 - 340 ^{o}C. This would indicate that the crude towers could realize an energy savings by adding an incremental layer of mineral wool to bring the thickness up to 100 mm (four inches). The additional insulation is only required in the flash zone area, which has been assumed to be fifteen feet of the tower. The existing insulation can either be removed with a new 100 mm (4 inch) layer installed, or left in place and an incremental 25 mm layer added.

3.0 EQUIPMENT LIST/SIZE

The only materials required are mineral wool insulation padding, galvanized sheeting, and retaining bands.

82

4.0 PREDICTED ENERGY SAVINGS

The expected energy savings after addition of the incremental insulation are as follows:

Annual Energy Savings	
T.O.E.	Ton mazout
5.2	5.4

5.0 INVESTMENT AND ASSOCIATED ECONOMIC EVALUATION

The estimated investment required for installation of additional insulation, as well as the estimated annual cost savings are given below:

Investment Cost		Annual Cost Savings	
$	LE	$	LE
16,356	23,716	605	151

6.0 CONCLUSIONS

Although additional layers of insulation located in the flash zone area of the column will lead to a direct savings of fuel fired to the furnace, it does not appear economical to add insulation at this time.

7.0 RECOMMENDATIONS

This ECO should not be implemented at this time. If the condition of the existing insulation ever deteriorates and requires replacement, then the economic thickness of insulation, 100 mm, should be installed.

ATMOSPHERIC DISTILLATION UNIT

INVESTIGATE ADDITION OF AN ABSORBER TO RECOVER C3 AND C4 FROM THE VAPOR RECOVERY UNIT OFF-GAS

Annual Savings, TOE	:	5,463
Annual Savings, $	:	1,219,838
Investment Cost, $	:	288,700
Payout: Simple, Yrs	:	0.24
DCF , %	:	--

ECO-13

1.0 PURPOSE

The purpose of this ECO is to increase the recovery of propane and associated butane in the Vapor Recovery Unit (VRU). Higher recovery will be achieved via the incorporation of an absorber into the current processing scheme. Energy conservation will be realized through the recovery of 50% of the losses of propane rich gases currently sent to the fuel/flare system.

2.0 PROCESS DESCRIPTION

The present processing arrangement utilizes a stabilizer tower, a de-ethanizer tower, and a stripper. The overhead vapors and liquids from the three atmospheric crude units are fed to the stabilizer, C-901, which removes butanes and lighter, leaving a stabilized naphtha/gasoline product which is sent to storage for gasoline blending or Merox treating, dependent upon demand. The butane and lighter overhead flows to the de-ethanizer, C-902, which removes ethane and lighter components to the fuel system. A side-draw is removed from the upper trays of this tower and routed to the stripper, C-903, where any ethanes are stripped from the propane product. The remaining product from the de-ethanizer is a bottoms product, a mixture of C3 and C4 LPG.

Future modification will entail the addition of an absorber to which the off-gases will be routed. The C3+ rich stream will be contacted with a cool lean oil drawn from the stabilizer. The lean oil will be cooled in a sea water cooler, sent to a trayed absorber where C3 and heavies will be absorbed, and routed to the feed surge drum. It is assumed that the stabilizer and its associated equipment will be able to accommodate the additional recycle of approximately 25 percent of normal stabilizer bottoms product, which will be created when the stabilized gasoline is utilized as lean oil in the absorber.

3.0 EQUIPMENT LIST/SIZE

The following equipment will be required to implement this ECO:

84

Absorber:

Diameter , mm :	1100 (3.5 feet)
Design Temperature, ^oC :	100
Design Pressure, Kg/cm^2 g :	16.5 (1618 kPa)
Number of Trays :	30 (one-pass)
Metallurgy :	Tower Shell : Killed C.S.
Trays :	410 S.S.
Length, M :	22.1 T/T

Lean Oil Trim Cooler:

Required Area , M^2 :	95
Design Pressure, Kg/cm^2 g :	19.3 (1893 kPa) Shell 13.0 (1275 kPa) Tube
Design Temperature, ^oC :	225 (Shell) 70 (Tube)

Lean Oil Circulation Pump:

NM^3/hr :	34.1
Discharge pressure, Kg/cm^2g :	17.6 (1726 kPa)
Head, M :	91.5

4.0 PREDICTED ENERGY SAVINGS

The anticipated annual energy savings realized after implementation of the absorber system are based on the recovery of 18 tons per day of propane rich gases, as liquid, which otherwise would have been sent to flare.

Annual Energy Savings
T.O.E.
5,463

The basis for energy savings is replacement of the calorific value of the propane removed from the fuel gas with equivalent mazout. As most of the fuel gas is consumed in the process heaters, the resultant energy figure has been adjusted to account for this, as more mazout needs to be fired. The additonal mazout fired is equivalent to 1105 T.O.E.

5.0 INVESTMENT AND ASSOCIATED ECONOMIC EVALUATION

The annual cost savings and the investment costs associated with the purchase and installation of the equipment defined above are estimated as follows:

Investment Cost		Annual Cost Savings	
$	LE	$	LE
288,700	646,700	1,219,838	142,888

95

6.0 CONCLUSIONS

The recovery of propane in the Vapor Recovery Unit is poor and can be improved through the addition of a lean oil absorber.

7.0 RECOMMENDATION

If further studies confirm that the existing stabilizer and its associated equipment will not be bottlenecked by introduction of a lean oil recycle of approximately 25 percent, then this ECO should be pursued on a more detailed basis. However, should the stabilizer not be capable of recycling stabilized gasoline as lean oil, due to tower restrictions, this ECO will no longer be attractive, as addition of a new stabilizer would be required.

96

JOINT ENGINEERING GROUP
OEP / FWEC
FOR: APC

REF. 11-36598
DATE MAY 1998
PAGE
REV.

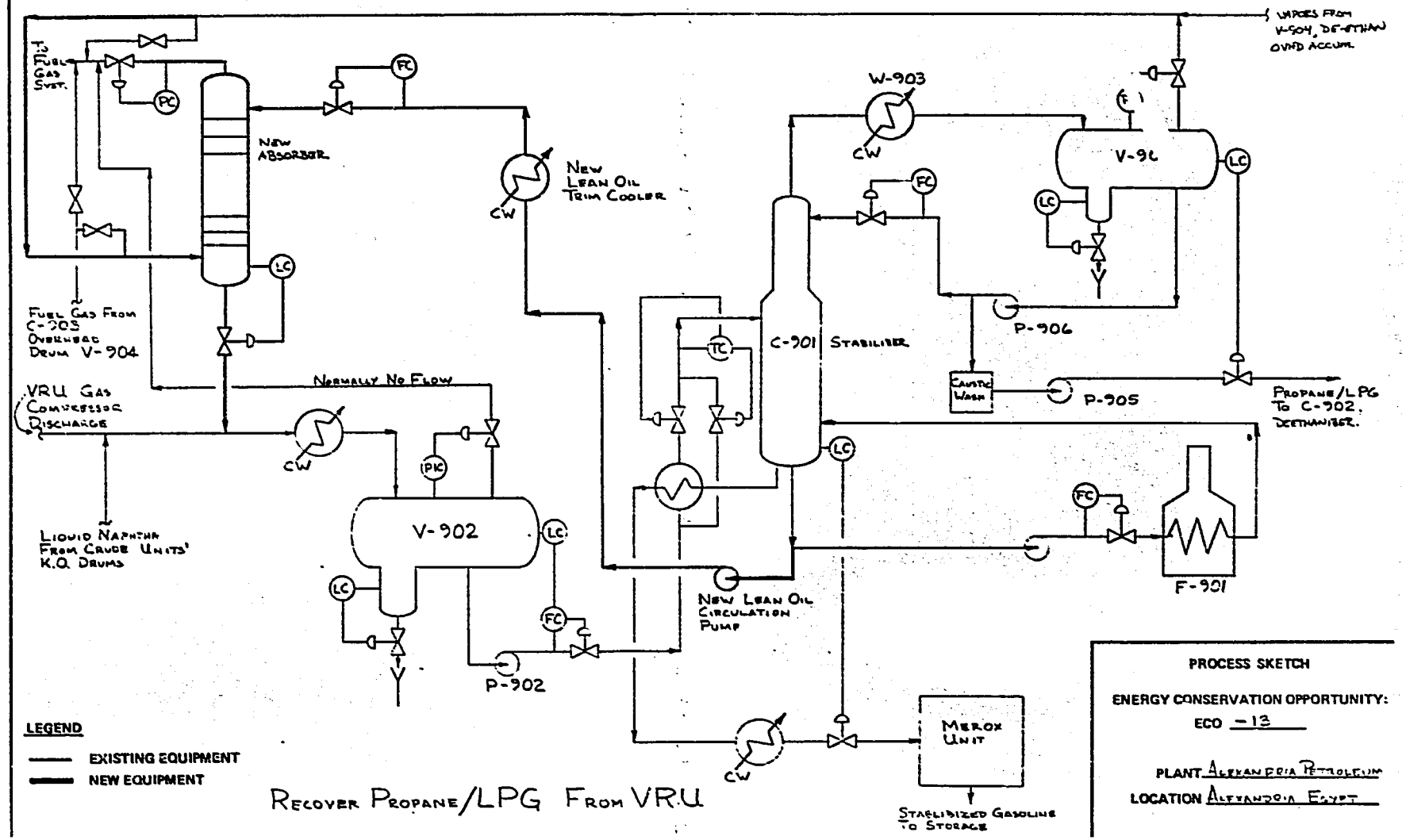

RECOVER PROPANE/LPG FROM VRU

LEGEND

EXISTING EQUIPMENT
NEW EQUIPMENT

PROCESS SKETCH

ENERGY CONSERVATION OPPORTUNITY:
ECO -13

PLANT ALEXANDRIA PETROLEUM
LOCATION ALEXANDRIA EGYPT

STEAM SYSTEM

RECOVER WASTE HEAT FROM DESALTER WATER

Annual Savings, TOE	:	575.
Annual Savings, $	:	66,335.
Investment Cost, $	:	142,400.
Payout: Simple, Yrs	:	2.15
DCF , %	:	--

ECO-14

1.0 PURPOSE

The purpose of this ECO is to recover the energy present in the desalter effluent water, prior to its discharge to the sewer.

2.0 PROCESS DESCRIPTION

The present desalting operation uses 33 tons/hr of drinking water or boiler feedwater to remove salt from the crude. This consumption of treated water is costly, as has been covered in ECO's 7 and 19. It is assumed for purposes of this ECO that stripped sour water will be used to desalt the crude (Case 1). However, if ECO 7 and ECO 19 are not implemented, the temperature may be below the stripped sour water supply temperature of 70 °C. Accordingly, a second case (Case 2) has been considered, that of a fresh water medium supplied at 60 °C. In this case, a two-shell exchanger would be required, rather than the one shell called for in the stripped sour water case.

In either case, the inlet desalting water will be piped up to a heat exchanger designed to recover the heat contained in the effluent desalting water.

3.0 EQUIPMENT LIST/SIZE

For installation of this ECO, the following equipment is required.

Exchanger (one for each Desalting Area - 2 total):

Design Temperature - Shell - 110 °C
Tube - 150 °C

Design Pressure - Shell - 18 Kg/cm^2g (1765kPa)
Tube - 18 Kg/cm^2g (1765kPa)

Total Surface Area

(ADU #4) Case 1 - 25 M^2 (one shell)
or, Case 2 - 35 M^2 (two shells)

(ADU #2 & #3) Case 1 - 50 M^2 (one shell)
or, Case 2 - 70 M^2 (two shells)

98

It is assumed the existing water pumps and control valves are suitable to accommodate the increased differential pressure of 1.4 Kg/cm^2g (137 kPa).

4.0 PREDICTED ENERGY SAVINGS

The anticipated energy savings which will be realized after implementation of this ECO are as follows:

Total Annual Energy Savings	
T.O.E.	Ton mazout
321 (Case 1)	330 (Case 1)
575 (Case 2)	592 (Case 2)

5.0 INVESTMENT AND ASSOCIATED ECONOMIC EVALUATION

The estimated total investment cost to purchase and install the necessary materials and equipment given above, as well as the annual cost savings are given below.

Figures are based on worldwide and local equipment and utility costs.

	Investment Cost		Annual Cost Savings	
	$	LE	$	LE
Case 1	73,600	164,900	37,012	9,247
Case 2	142,400	319,000	66,335	16,573

6.0 CONCLUSIONS

Energy conservation can be achieved through recovery of the heat contained in the desalter effluent water. Heat unrecovered is only energy wasted, as the desalter effluent stream flows to the sewer.

7.0 RECOMMENDATION

This ECO should be implemented. This ECO does not require that ECO-07 or ECO-19 be implemented as a prerequisite.

JOINT ENGINEERING GROUP
OEP / FWEC
FOR: APC

REF. 11-36598
DATE MAY, 1988
PAGE
REV.

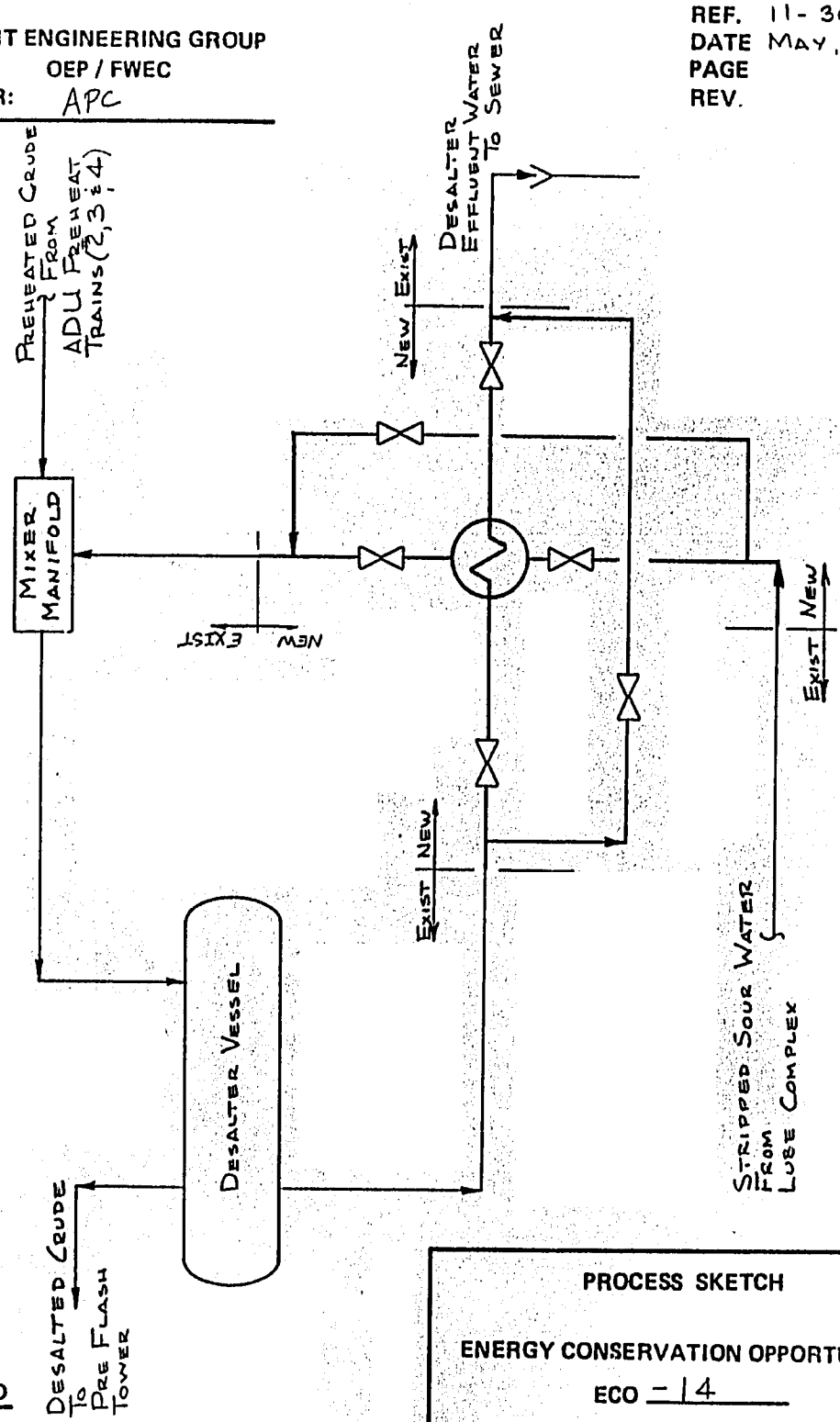

RECOVER WASTE HEAT FROM DESALTER WATER

LEGEND

EXISTING EQUIPMENT
NEW EQUIPMENT

PROCESS SKETCH

ENERGY CONSERVATION OPPORTUNITY:
ECO - 14

PLANT ALEXANDRIA PETROLEUM

LOCATION ALEXANDRIA, EGYPT

LUBE OIL COMPLEX

STUDY THE ADDITION OF NEW BURNERS TO FIRE HYDROGEN RICH PURGE GAS FROM THE HYROTREATERS

Annual Savings, TOE	:	Not
Annual Savings, $	:	Required
Investment Cost, $	:	(See Text)
Payout: Simple, Yrs	:	"
DCF , %	:	"

ECO-15

1.0 PURPOSE

The purpose of this ECO is to burn hydrogen-rich purge gas from the Lube Oil Hydrofinishing Unit (LHF) and the Wax Hydrotreating Unit (WHT) in the Reactor Feed Heater, BA-5001, instead of venting this purge gas to flare.

2.0 PROCESS DESCRIPTION

Purge gas from the WHT LP Separator, FA-6004, the LHF LT HP Separator, FA-5003, and the LHF LT LP Separator, FA-5004, flows to the flare header. Although the original IFP design anticipated that these purge gas streams would flow into a sour fuel gas header, no such fuel gas header exists in the Lube Oil Complex. The pressure in the two LP Separators is too low to warrant sending the purge gas to the VRU fuel gas header.

Burning the purge gas in the LHF Reactor Feed Heater through new low BTU burners was considered, but is not recommended. The H_2S content of the purge gas is very high and should be lowered before burning. If the pressure of the LP Separators cannot be raised in order to send all purge gas to the VRU fuel gas header, then this gas should be sent to the flare. Process considerations and vendor input are required to determine if the LP Separator pressure can, in fact, be raised.

In order to recover the combustion energy of the purge gas streams, it is suggested that a flare gas recovery system, as described in ECO-02, be considered. In such a system, fuel gas sweetening facilities will most likely be required.

The lower heating valve for the HP gas is 12,401 kcal/kg and for the LP gas is 9,553 kcal/kg. Molecular weights are 9.43 and 13.81 respectively.

3.0 EQUIPMENT LIST/SIZE

Not applicable.

4.0 PREDICTED ENERGY SAVINGS

Not applicable.

91

5.0 INVESTMENT AND ASSOCIATED ECONOMIC EVALUATION

Not applicable.

6.0 CONCLUSIONS

Direct combustion of hydrotreater and hydrofinisher purge gases is not feasible due to the high concentration of H_2S associated with such gases.

7.0 RECOMMENDATIONS

Although direct combustion of the purge gases is not feasible, recovery of the purge gas as treated fuel gas is recommended.

97

LUBE OIL COMPLEX

CHECK COMBUSTION EFFICIENCY OF PROCESS FIRED HEATERS

Annual Savings,	TOE	:	3944
Annual Savings,	$	:	455,228
Investment Cost,	$	:	105,500
Payout: Simple,	Yrs	:	0.23
DCF,	%	:	--

ECO-16

1.0 PURPOSE

The purpose of this ECO is to improve the overall efficiency of the lube oil complex process fired heaters. The combustion efficiency of process fired heaters is highly effected by the oxygen content of the flue gas. Additionally, combustion efficiency is effected by the degree to which combustion is completed.

2.0 PROCESS DESCRIPTION

Fired heater fuel rates are adjusted in accordance with the required process demand. Air entering through the burners mixes with the misted fuel oil or fuel gas at the burner throat and should be mixed sufficiently to produce complete combustion. On natural draft furnaces air is drawn into the burner registers as a result of the natural draft effect. On forced draft furnaces air is forced through the air preheater and then through the burners. When load changes in the process are made, air should be modulated with the burner dampers on natural draft type furnaces. As the load changes on forced draft furnaces the variable inlet vanes on the forced draft fan should be adjusted.

As the quantity of excess air is increased above the design requirements for a given firing rate, more fuel must be fired to the furnace to heat up the additional air. The excess air passes through the fired heater and up the stack releasing only a small portion of its energy to the process. Stoichometric combustion is not possible (0 percent excess air) therefore, a small amount of excess air is required to allow for complete combustion. This small amount of excess air not only helps to force the combustion reaction to completion, but also acts to aid in the fuel air mixing process.

The condition and design of the burners must be such that complete mixing of fuel and air streams occurs. If a very good degree of mixing is not accomplished in the burners, complete combustion cannot occur. This means that some of the hydrocarbons that are supplied in the fuel are not able to complete the oxidation reaction and do not liberate heat. The net result is an effective reduction in the heating value of the fuel that is supplied. When smoke is seen in the stack exhaust or in the combustion chamber of the fired heater this is an indication that combustion is not complete. The existence of carbon monoxide is also an

93

indication of this condition.

Monitoring of the flue oxygen and combustibles provides the operator of the fired heater with the information that is needed so that adjustments in the burner registers or dampers can be made as operating conditions change. It is absolutely imperative that all fired heaters have permanently installed and operating oxygen analyzers local to the furnace firing controls. For natural draft furnaces, where the dampers are moved manually, the optimum location for the oxygen and combustibles analyzers is near the furnace at grade.

The oxygen analyzer should draw its sample from the radiant section of the fired heater. This will provided a sample of the flue gas that best represents the oxygen and combustibles content of the combustion process. If the analyzers are located in the stack or in the convection section any leakage of air (due to the low pressure in the furnace) into the furnace will mix with the flue gas and increase the oxygen reading on the analyzer. The purpose of the oxygen analyzer is to provide information about the combustion process only.

Also critical to the furnace, is maintenance of the arch draft (upper portion of the radiant section). The draft at the arch should be controlled at 2mm water gage below atmospheric at all times. A controlled, negative pressure is required to provide draft to draw air into the burners and protect personnel, but excessively high furnace draft will increase the leakage of air into the furnace and thus cool down the flue gas decreasing the furnace overall efficiency. It is absolutely imperative that a pressure sensor, transmitter and indicator be working at all times. The stack damper should be manually adjusted to correct the arch draft on natural draft type furnaces. The burner dampers should not be used to adjust the arch draft. The burner dampers should only be used to adjust the flue gas oxygen level.

On forced draft air preheat systems, the induced draft fan inlet box dampers should be used to make adjustments in the furnace draft. The variable inlet vanes on the forced draft fan should not be used to adjust the arch draft. The variable inlet vanes should only be used to modulate the flue gas oxygen content. The burner dampers are used to compensate for normal maldistributions in the duct work, burners and plenum. Once set for any operating level the burner dampers on a forced draft system need not be readjusted as load changes occur. The ratio of burner damper pressure drops will not change as the load is increased and decreased. After the initial setting of the burner dampers on a forced draft furnace the only time that the dampers are ever moved is if a burner is taken out of operation for cleaning or maintenance. During that time the burner damper on the burner that is out of service is

closed.

Installation of oxygen analyzers in the radiant section of each fired heater will make it possible to operate the lube oil complex forced draft furnaces at a flue gas oxygen level of 3.7 percent as recommended in the furnace design data sheets. The natural draft furnaces can be operated at 5.0 percent flue gas oxygen. It is also suggested that the oxygen analyzers have attached combustible analyzers. Design improvements in burners have made it possible to provide excellent combustion efficiency at very low levels of excess air. If the existing burners cannot produce the desired oxygen levels in the flue gas, while also providing complete combustion with well defined flame patterns, burner replacement or repair may be required.

3.0 EQUIPMENT LIST/SIZE

5 (five) Oxygen and combustibles analyzers (as supplied by Thermox corp. or Teledyne Analytical Instruments Corp.)

4.0 PREDICTED ENERGY SAVINGS

The following tabulation shows the current flue gas oxygen levels and efficiencies for the atmospheric distillation complex process fired heaters:

	BA-1001	BA-2002 & 2002	BA-3001	BA-4001
OXYGEN (%)	11.0	14.5	7.0	11.5
EFFICIENCY(%)	83.5	82.4	80.3	86.6

The tabulation that follows indicates the improved efficiencies that will result when the flue gas oxygen is maintained as indicated:

	BA-1001	BA-2002 & 2002	BA-3001	BA-4001
OXYGEN (%)	3.7	3.7	5.0	3.7
EFFICIENCY(%)	90.3	90.3	81.9	90.3

Indicated here is the cumulative energy savings that will be realized when the oxygen level is maintained:

ANNUAL ENERGY SAVINGS

T.O.E.	TONS MAZOUT
3944	4062

95

5.0 INVESTMENT AND ASSOCIATED ECONOMIC EVALUATION

The estimated total investment and annual cost savings for purchasing and installing the equipment listed above is listed below for both worldwide and local equipment and utility costs.

INVESTMENT COST		ANNUAL ENERGY COST SAVINGS	
$	LE	$	LE
105,500	236,300	455,228	113,736

6.0 CONCLUSIONS

This ECO will provide a rapid and considerable payout.

7.0 RECOMMENDATIONS

This ECO should be implemented at the earliest opportunity. It will be absolutely necessary to instruct the operators of the fired heaters in the proper operation of the above improvements, including equipment maintenance and instrument calibration.

LUBE OIL COMPLEX	Annual Savings, TOE :	708
	Annual Savings, $:	81,701
STUDY THE FEASIBILITY OF	Investment Cost, $:	500,000
COMBUSTION AIR PREHEAT	Payout: Simple, Yrs :	6.1
FOR PROCESS FIRED HEATERS	DCF, % :	7.0

ECO-17

1.0 PURPOSE

The purpose of this ECO is to study the feasibility of combustion air preheat for the process fired heaters in the lube oil complex. All of the fired heaters in the lube oil complex have combustion air preheat systems with the exception of the extract heater (BA-3001), therefore this study only addresses the extract heater. Overall combustion efficiency can be improved on process fired heaters by exchanging stack gas sensible heat with combustion air and thus decreasing fuel firing rates.

2.0 PROCESS DESCRIPTION

As fuel is fired into the radiant section of a fired heater a portion of the heat that is liberated will be absorbed by the combustion air. The combustion air must be brought up to the theoretical flame temperature before combustion can occur. When combustion air is supplied at higher temperatures, less heat must be supplied or used to heat up the combustion air. The result is that less fuel need be fired into the furnace.

Combustion air can be preheated by exchanging heat with hot flue gases that leave the stack of the furnace. Frequently, a cold enough process sink does not exist to cool down the flue gases and thus sensible heat is lost to the atmosphere. Combustion air provides a good cold sink at ambient temperature.

A combustion air preheater is an exchanger that does not allow leakage of flue gas into the combustion air or vice verse. Additionally, a combustion air preheater should not create considerable pressure losses in the air of flue gas paths.

The feasibility of an air preheat system is dependent on the amount of heat that is available for recovery to offset the equipment cost. In general, high stack temperatures and high heat load furnaces are the best candidates for air preheaters. As either the stack temperature or the furnace load becomes smaller it is difficult to justify the investment in such equipment.

3.0 EQUIPMENT LIST/SIZE

1 (one) forced draft fan

1 (one) induced draft fan

1 (one) cast iron recuperative air preheater

8 (eight) combination oil and gas forced draft burners

Air and flue gas duct work

Associated instrumentation and electricals

4.0 PREDICTED ENERGY SAVINGS

The overall efficiency will increase to 90.2 percent when the stack temperature is reduced from 316 °C to 160 °C. The projected energy savings is as follows:

ANNUAL ENERGY SAVINGS	
T.O.E.	TONS MAZOUT
708	729

5.0 INVESTMENT AND ASSOCIATED ECONOMIC EVALUATION

The estimated total investment and annual cost savings for purchasing and installing the equipment listed above is listed below for both worldwide and local equipment and utility costs.

INVESTMENT COST		ANNUAL ENERGY COST SAVINGS	
$	LE	$	LE
500,000	1,120,000	81,701	20,412

This estimated cost investment is conceptual.

6.0 CONCLUSIONS

The payout for this ECO will be marginal.

7.0 RECOMMENDATIONS

This ECO does not show that there will be a vary rapid payout, but may require further investigation. At present, the extract heater has a coking problem in the radiant section of the furnace. It is possible that an air preheat system will cause an increased rate of tube coking due to an increase in the flux rate in the radiant section of the furnace. Although the overall heat input into the process will remain the same after installation of an air preheater, the net affect of an air preheater is an increase of heat transfer in the radiant section and a corresponding decrease of heat transfer in the convection section.

98

JOINT ENGINEERING GROUP
OEP / FWEC
FOR: APC

REF. 11-36598
DATE MAY 1988
PAGE
REV.

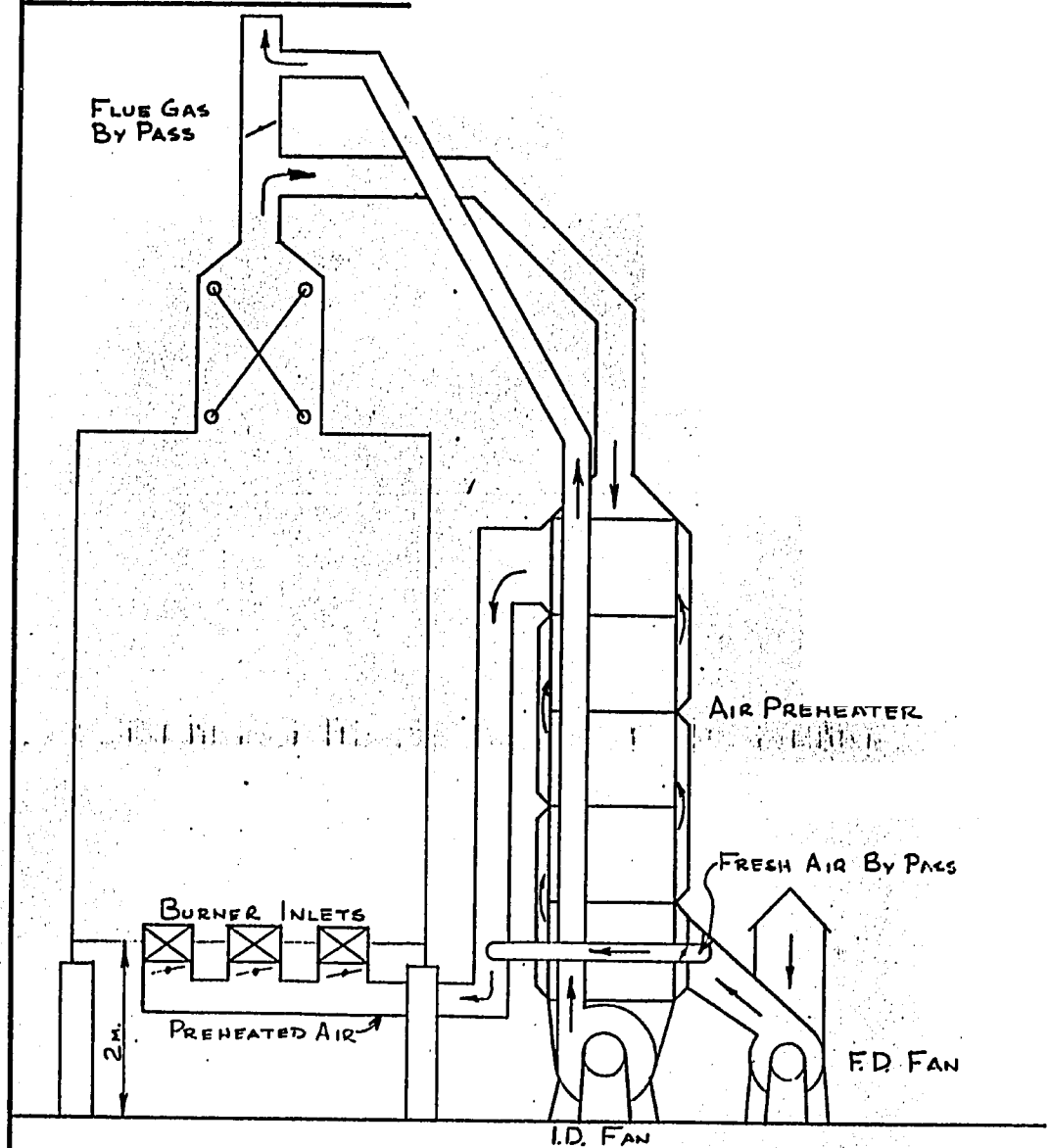

PROCESS SKETCH

ENERGY CONSERVATION OPPORTUNITY

ECO 17

PLANT ALEXANDRIA PETROLEUM

LOCATION ALEXANDRIA, EGYPT

LEGEND

EXISTING EQUIPMENT
NEW EQUIPMENT

ECO-18

(ECO NUMBER NOT USED)

LUBE OIL COMPLEX

RECOMMISSION SOUR WATER STRIPPER AND USE STRIPPED SOUR WATER IN DESALTERS

Annual Savings, TOE	:	250.
Annual Savings, $	:	206,430.
Investment Cost, $	:	94,300.
Payout: Simple, Yrs	:	0.46
DCF , %	:	--

ECO-19

1.0 PURPOSE

The sour water stripper in the lube complex has a corroded feed line. As a result, all sour water is routed to the sewer. Energy will be conserved, if this condition is rectified and the stripped sour water is utilized in the crude desalters.

2.0 PROCESS DESCRIPTION

The sour water stripper tower was designed to handle 34 tons per hour of sour water. Normally, this tower only processes 20-25 tons per hour. Provisions should be made to accept 13 tons per hour of sour water from the atmospheric tower overhead drums (refer to ECO-07). This modification will assure adequate inventory of stripped sour water to meet the desalting requirement of 32.7 tons per hour, based on five volume percent of crude throughput. Flow control to route the sour water to the desalters is already in place. The only further modification required is the possible addition of a header to supply the stripped water to the desalters in the atmospheric unit.

To alleviate the corrosion problem in the feed line, the location of the feed control valve must be changed. At present, the valve is located at grade. By elevating this valve as close to the tower inlet as possible, flashing in the line is avoided until the tower entrance. This prevents the hydrogen sulfide from coming out of solution and attacking the steel. In addition, the feed inlet and piping downstream of this valve should be changed to either killed carbon steel with a high corrosion allowance (1/4"), or stainless steel, the line size of the inlet nozzle will be enlarged to 4" to decrease erosion.

3.0 EQUIPMENT LIST/SIZE

The following items are required to recommission the sour water stripper:

Stripped sour water header:	4" killed carbon steel 1000 M length
Feed Nozzle:	4" with an internal elbow stainless steel

It is assumed that the flow control valve for stripped sour water can be reused.

It is also assumed that the present feed surge drum is adequate, as it was originally designed for 34 tons per hour.

4.0 PREDICTED ENERGY SAVINGS

The anticipated savings realized, after recommissioning the sour water stripper, are as follows:

Annual Energy Savings	
T.O.E.	Tons mazout
249.8	257.3

Note: The above figures are based on supplying the net desalting requirement after taking account of the 13 tons per hour supplied to the stripper from the Atmospheric Unit. The savings are based on 19.7 tons per hour of stripped water being supplied by sour water originating from the Lube Oil Complex.

5.0 INVESTMENT AND ASSOCIATED ECONOMIC EVALUATION

The investment cost to purchase and install the new feed nozzle, relocated the feed valve, and erect a stripped water header to the desalters are as follows.

Figures are based on worldwide and local equipment and utility costs.

Investment Cost		Annual Cost Savings	
$	LE	$	LE
94,300	211,200	206,430	56,803

6.0 CONCLUSIONS

It is standard refinery practice to recover sour water, strip it, and reuse it for desalting prior to disposal.

7.0 RECOMMENDATIONS

The sour water stripper should be recommissioned immediately as outlined above.

LUBE OIL COMPLEX

INVESTIGATE THE USE OF A CLOSED LOOP SYSTEM TO RECOVER PUMP BEARING COOLING WATER

Annual Savings, TOE	:	-52.4
Annual Savings, $	:	101,800.
Investment Cost, $	:	183,200.
Payout: Simple, Yrs	:	1.80
DCF , %	:	37.0

ECO-20

1.0 PURPOSE

At present, drinking water is utilized to cool the pump bearings at the Lube Oil Complex. This cooling system is an open one, with the outlet water drained to sewer. Design of a closed loop cooling system will reduce expenses by lowering drinking water consumption.

2.0 PROCESS DESCRIPTION

The present open cooling system consumes cold drinking water which is circulated through a header to the individual users. The hot return water is collected and drained to the API separator, and finally to sewer. This return water can be recycled through a sea water cooler to a surge drum from where the cool water is supplied. An existing sea water exchanger is available to provide the required cooling duty for the design flow of 125 M^3/hr. This exchanger is deemed adequate to cool the return water from a design temperature of 55 ^oC to a design supply temperature of 30 ^oC. Nozzle sizes must be checked, before confirming the suitability for this service.

A 4 M diameter x 4 M T/T drum is available to provide surge volume for the system. While this vessel may be adequate from a surge volume standpoint, it may not provide the oil separation which is required. A horizontal drum with a length to diameter ratio of at least 2:1 is preferred. As such, this vessel is not deemed suitable.

For circulation, a 125 M^3/hr pump (611 GPM) will be required. Flow control and pressure control instrumentation will be required as well. It has been assumed that the required surge drum, circulating pump, and instrumentation will be new while the cooler will be re-used.

3.0 EQUIPMENT LIST/SIZE

The following equipment items are required to design the closed loop system (refer to the attached sketch):

Surge Drum:
- 2.0 M. Diameter x 6 M. Length, Carbon Steel
- Design Pressure : 3.5 Kg/cm^2g (343 kPa)
- Design Temperature : 65 ^oC.

.03

Circulation Pump: (two required)	125 M^3/hr 7.03 Kg/cm^2 differential pressure 60 M. Hp motor
Instrumentation:	As shown on sketch.
Distribution Piping:	6" Diameter Carbon Steel 500 M Length

4.0 PREDICTED ENERGY SAVINGS

This ECO requires energy for pumping to implement. Therefore the energy "savings" is negative.

Annual Energy Savings	
T.O.E.[1]	MWH
-52.4 (consumption)	-208 (consumption)

5.0 INVESTMENT AND ASSOCIATED ECONOMIC EVALUATION

The total investment cost to purchase and install the required equipment as well as the anticipated cost savings to be realized are given below.

Figures are based on worldwide and local equipment and utility costs.

Investment Cost		Annual Cost Savings	
$	LE	$	LE
183,200	410,000	101,800	39,242

6.0 CONCLUSIONS

It is good engineering practice to recover and re-use cooling water. The additional energy costs which will be incurred through operation of the pump will be offset by lower drinking water costs.

7.0 RECOMMENDATIONS

This ECO should be pursued in a timely fashion following allocation of funding. However, should funds become unavailable, a thorough search of existing pumps and drums may produce suitable candidates for the services required. Should this be the case, this ECO should be implemented during the next turnaround/shutdown.

---

[1] Electrical T.O.E. values include a typical 34% efficiency factor and correspond to generating electricity using a condensing steam turbine system.

JOINT ENGINEERING GROUP
OEP / FWEC
FOR: APC

REF. 11-36598
DATE MAY 1988
PAGE
REV.

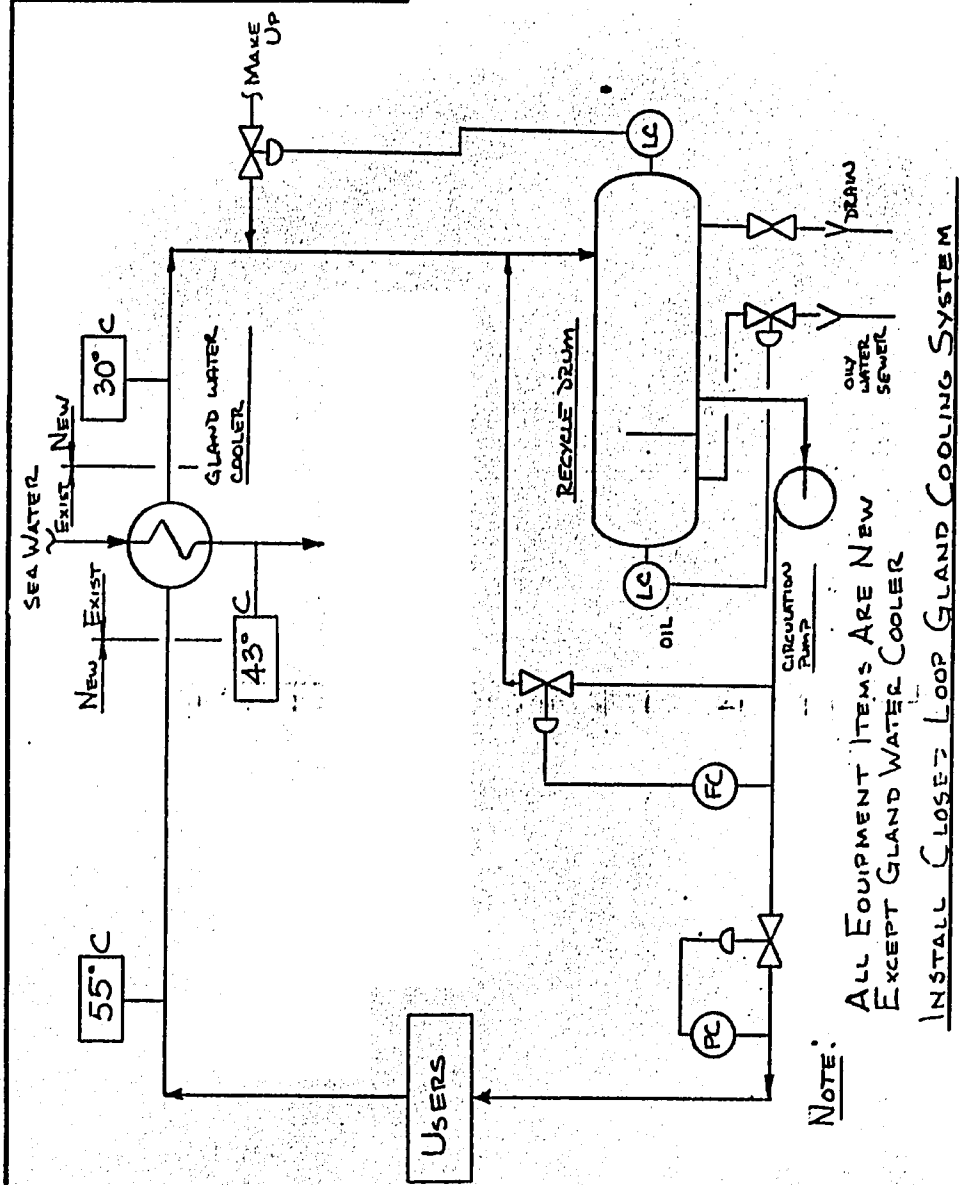

LEGEND

EXISTING EQUIPMENT
NEW EQUIPMENT

PROCESS SKETCH

ENERGY CONSERVATION OPPORTUNITY

ECO 20

PLANT APC

LOCATION ALEXANDRIA

105

STEAM SYSTEM

RECOVER HEAT AND PRODUCE STEAM FROM CONTINUOUS BLOWDOWN

Annual Savings, TOE	:	188.
Annual Savings, $	:	21,742.
Investment Cost, $	:	83,200.
Payout: Simple, Yrs	:	3.83
DCF , %	:	14.0

ECO-21

1.0 PURPOSE

The purpose of this ECO is to produce steam from the continuous blowdown of boilers 1 and 4 in the Atmospheric Distillation Complex and to preheat boiler feed water using hot continuous blowdown. This will help conserve energy which would otherwise be wasted by disposing of blowdown directly.

2.0 PROCESS DESCRIPTION

The present system is to pump boiler feed water directly to the economizer, while hot continuous blowdown is sent to drainage. The heat recovery system on the attached sketch will recover heat from boiler blowdown thereby reducing the energy consumption of each boiler. The present normal continuous boiler blowdown rate is 3 tons/hour.

3.0 EQUIPMENT LIST/SIZE

The following equipment is necessary to implement this ECO:

Flash drum

750 mm diameter x 2250 mm T/T
220 ^{o}C, 7 kg/cm^2 g (686 kPa) design

Heat Exchanger

Area : 30 M^2
12 Kg/cm^2 (1177 kPa), 350 ^{o}C tubes
18 Kg/cm^2 (1765 kPa), 125 ^{o}C shell
Carbon steel shell and tubes

Piping

15 M - 2" pipe (liquid)
25 M - 3" pipe (vapor), 37.5 mm insulation

Instrumentation

As shown on sketch.
plus: 1 - 1 x 1 1/2" PSV

4.0 PREDICTED ENERGY SAVINGS

The anticipated annual energy savings after installation of the above system is below:

Annual Energy Saving	
T.O.E.	Tons Mazout
188	194

5.0 INVESTMENT AND ASSOCIATED ECONOMIC EVALUATION

The total investment cost to purchase and install the equipment listed as well as the annual cost savings are below.

Figures are based on worldwide and local equipment and utility costs.

Investment Cost		Annual Energy Cost Saving	
$	LE	$	LE
83,200	186,400	21,742	5,432

6.0 CONCLUSIONS

This ECO has a very attractive payout. It is a good engineering practice to recover heat from blowdown through heat exchange and/or low pressure flash drums to produce steam.

7.0 RECOMMENDATIONS

This ECO should be implemented during a turnaround/shutdown period.

JOINT ENGINEERING GROUP
OEP / FWEC
FOR: APC

REF. 11-36598
DATE MAY 1988
PAGE
REV.

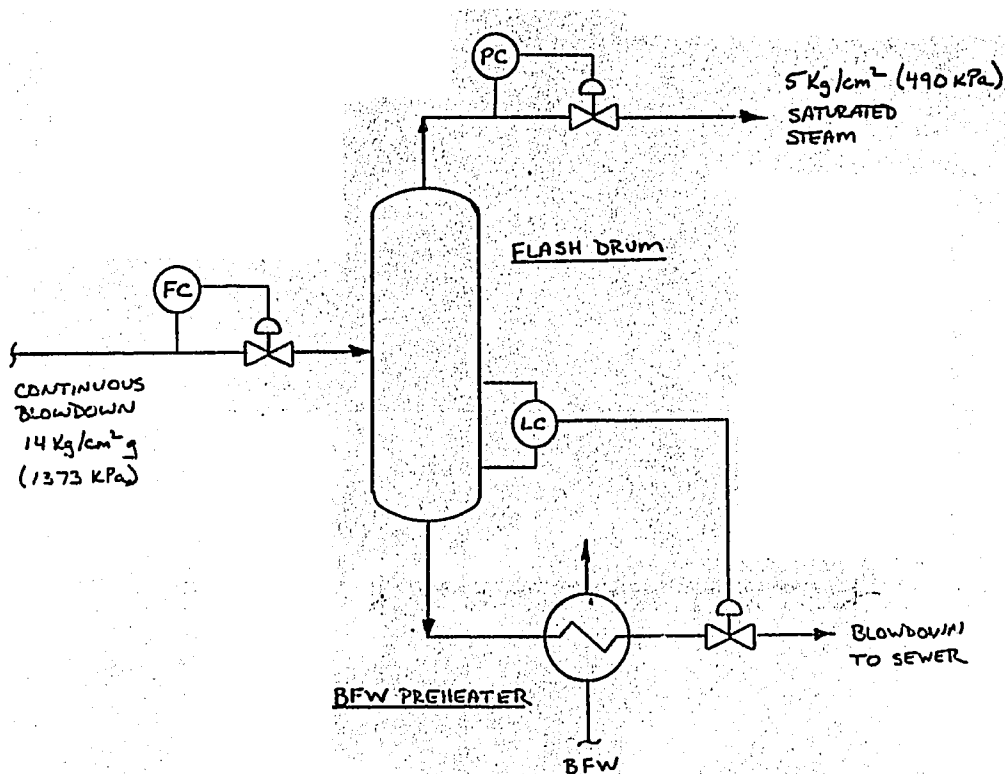

NOTE: ENTIRE SYSTEM IS NEW

LEGEND

EXISTING EQUIPMENT
NEW EQUIPMENT

PROCESS SKETCH

ENERGY CONSERVATION OPPORTUNITY:

ECO 21

PLANT APC

LOCATION ALEXANDRIA, EGYPT

STEAM SYSTEM

ADD NEW OR REPAIR EXISTING INSULATION ON STEAM AND CONDENSATE LINES

Annual Savings, TOE	:	439.
Annual Savings, $	:	50,767.
Investment Cost, $	:	13,305.
Payout: Simple, Yrs	:	0.26
DCF , %	:	--

ECO-22

1.0 PURPOSE

The purpose of this ECO is to provide new insulation on piping in order to conserve energy by minimizing heat losses.

2.0 PROCESS DESCRIPTION

A detailed review was conducted during the preaudit phase to determine locations of hot piping and vessels that required new insulation to be installed. It was determined at that time that new insulation was required.

The basis of this ECO is to provide new insulation where none is currently installed on the piping and to replace existing insulation in those locations where this insulation is judged to be in bad condition and is visibly not effective for heat conservation.

The pipe sizes and lengths to be insulated were measured. The lengths include flanges and valves that were not presently insulated. The required insulation thicknesses were then determined by use of the "Heatalyzer" Economic Insulation Thickness computer program. The "Optimum Insulation Thickness and Energy Savings" table is included in this report as a separate ECO titled, "Study the Effects of Insulation on Heat Loss From Pipes."

3.0 EQUIPMENT LIST/SIZE

The following tabulation summary lists the insulation requirement by pipe size, insulation thickness, length and annual energy savings.

Atmospheric Distillation Unit

Line ize	Insulation Thickness (mm)	Meters	Annual Energy Savings, KJ
1/2"	37.5	18	266,861,740
2"	37.5	80	1,428,573,500
4"	37.5	67	2,130,797,400
	75	2	138,332,100

104

Line Size	Insulation Thickness (mm)	Meters	Annual Energy Savings, KJ
6"	50	3	137,649,350
	75	15	1,961,472,800
8"	50	2	260,643,750
	62.5	5	113,045,600
	100	5	749,890,270
10"	50	2	126,656,910
12"	62.5	20	1,606,218,000
	75	2	160,802,240
	100	5	2,070,190,200

Total Energy Savings - ADU 11.151×10^9 kJ/year

LUBE OIL COMPLEX

Line Size	Insulation Thickness (mm)	Meters	Annual Energy Savings, KJ
3/4"	25	9	78,858,800
1"	25	5	48,171,180
1 1/2"	37.5	5	66,715,435
2"	37.5	12	220,629,110
	75	5	219,166,060
6"	75	2	221,009,500
8"	50	4	208,515,000
	100	3	469,056,330
14"	100	5	1,161,199,700

Total Energy Savings - Lube 2.695×10^9 kJ/year

Insulation to be mineral wool. Jacketting to be galvanized steel.

4.0 PREDICTED ENERGY SAVINGS

The "Heatalyzer Economic Thickness" computer program determines the heat saved in $/ft. of pipe for various line sizes and at different operating fluid temperatures. It also calculates the economic insulation thickness. These heat savings are summarized as follows based on worldwide costs:

	Annual Energy Savings	
	T.O.E.	Ton mazout
ADU	354	365
Lube	85	88
	439	453

110

5.0 INVESTMENT AND ASSOCIATED ECONOMIC EVALUATION

The estimated total investment and annual cost savings for applying the economic thickness of insulation to all piping is below. Figures are based on worldwide and local equipment and utility costs.

	Investment Cost		Annual Cost Savings	
	$	LE	$	LE
ADU	10,712	15,532	40,905	10,220
Lube	2,593	3,760	9,862	2,464
Total	13,305	19,292	50,767	12,684

6.0 CONCLUSIONS

Insulation should be applied to bare lines in plants including those where insulation is in poor condition.

7.0 RECOMMENDATION

This ECO should be initiated immediately.

111

STEAM SYSTEM

REPAIR OF STEAM, AIR, WATER AND CONDENSATE LEAKS FROM PIPING

Annual Savings, TOE	:	1,461
Annual Savings, $	:	168,665
Investment Cost, $	:	8,750
Payout: Simple, Yrs	:	19 days
DCF, %	:	--

ECO-23

1.0 PURPOSE

The purpose of this ECO is to repair steam, air, water and condensate leaks from valves, lines, flanges, etc. to minimize energy losses.

2.0 PROCESS DESCRIPTION

A detailed survey was made of the steam, air, boiler feed water and condensate leaks in the atmospheric and lube complexes. All leaks were tagged and identified during the preaudit. The size of each leak was estimated as either small, medium, large or extra large. An estimated quantity of steam was assigned to each size of leak, based upon published figures and experience for the various hole sizes that were estimated. Air leaks were noted, but not quantitatively estimated, as the quantity of each was small as compared to the steam and condensate leaks.

3.0 NUMBER OF STEAM AND CONDENSATE LEAKS

We noticed a total of 175 leaks, which were identified by means of 100 red tags within the various units of the atmospheric and lube complexes. The source of the leaks are distributed as follows:

Valves	73
Pipe lines	84
Flanges	18
TOTAL	175

Leaks from valves are through the glands and/or gaskets. Leaks from pipelines are largely through fittings and holes in the pipes. Note also that steam trap leaks are not included here, as they are covered separately under ECO-26.

112

The leaks are further categorized by size as follows:

Type	Est. Leakage per leak tag Kg/hr	Number of Leak Tags: 14 Kg/cm² Steam	3.5 & 3.9 Kg/cm² Steam	Cond.
Small	8	4	12	0
Medium	20	12	38	4
Large	35	10	14	5
Ex-large	80-160	0	1	0
TOTAL		26	65	9

Type	TOTAL LEAKAGE RATE, Kg/hr
Small	128
Medium	1080
Large	1015
Ex-large	80
TOTAL	2303

Annual leakage, based on 8000 operating hours per year, is estimated to be 18,424 metric tons.

4.0 PREDICTED ENERGY SAVINGS

The anticipated energy savings, after fixing all of the leaks, is below.

ANNUAL ENERGY SAVINGS	
T.O.E.	Tons mazout
1461	1505

5.0 INVESTMENT AND ASSOCIATED ECONOMIC EVALUATION

The estimated total investment and annual cost savings for repairing the above leaks is below. Figures are based on worldwide and local equipment and utility costs.

INVESTMENT COST		ANNUAL ENERGY COST SAVINGS	
$	LE	$	LE
8,750	19,600	168,665	42,140

6.0 CONCLUSIONS

The worst steam leaks are in the wax hydrotreating unit of the Lube Oil Complex. These leaks in the steam tracing system are caused by the switchover from L.P. steam to H.P. steam. This switchover was made to alleviate line plugging and for maintaining proper temperatures at the product separator. In our opinion, this practice should be stopped, because the tracer piping is not designed to handle H.P.

steam. As an energy conservation measure, we recommend that the insulation be improved on the piping and equipment. For very little investment this ECO is extremely attractive.

7.0 RECOMMENDATIONS

This ECO should be initiated immediately.

STEAM SYSTEM

CHECK COMBUSTION EFFICIENCY OF STEAM BOILERS

Annual Savings, TOE	:	448.
Annual Savings, $	:	51,664.
Investment Cost, $	:	21,100.
Payout: Simple, Yrs	:	0.41
DCF, %	:	--

ECO-24

1.0 PURPOSE

The purpose of this ECO is to improve the overall efficiency of the steam system boilers in the Atmospheric Distillation Complex and the Lube Oil Complex. The combustion efficiency of the steam system boilers is highly affected by the oxygen content of the flue gas. Additionally, combustion efficiency is affected by the degree to which combustion is completed.

2.0 PROCESS DESCRIPTION

The boiler firing rate is manually adjusted in accordance with the required steam demand. Air entering through the burner register mixes with the misted fuel oil at the burner throat and should be mixed sufficiently to produce complete combustion. Air is forced into the burner register by way of a forced draft fan. When normal load changes of the boiler are made, air should be adjusted with the damper located on the forced draft fan.

As the level of excess air is increased, more fuel must be fired to the boiler to heat up the additional air. The excess air simply passes through the boiler and up the stack releasing only a small portion of its energy to the process.

Stoichiometric combustion is not possible (0 percent excess air) therefore, a small amount of excess air is required to allow for complete combustion. This small amount of excess air not only helps to force the combustion reaction to completion, but also acts to aid in the fuel/air mixing process.

The condition and design of the burners must be such that complete mixing of the oil and air streams occurs. If a high degree of mixing is not accomplished in the burners complete combustion cannot occur. This means that some of the hydrocarbons that are supplied in the oil are not able to complete the oxidation reaction and do not liberate heat. The net result is an effective reduction in the heating value of the fuel oil that is supplied. Visible smoke in the stack exhaust or in the combustion chamber of the boiler is an indication that combustion is not complete. The existence of carbon monoxide is also an indication of this condition.

Monitoring of the flue oxygen and combustibles provides the

operator of the boiler with the information that is needed so that adjustments in the forced draft fan can be made as operating conditions change. It is absolutely imperative that all boilers with a significant load have permanently installed and operating oxygen analyzers local to the boiler firing controls.

Installation of oxygen analyzers in the stack of the boilers in the Atmospheric Distillation Complex will make it possible to operate the boilers at a stack oxygen level of 3.7 percent. Oxygen analyzers are already present at the Lube Complex boilers. Repair and clearing of the sample lines to the boilers in the Lube Oil Complex will make it possible to maintain 3.7 percent oxygen in the stack. It is also suggested that the oxygen analyzers have attached combustible analyzers. Design improvements in burners have made it possible to provide excellent combustion efficiency at very low levels of excess air. If the existing burners cannot produce the desired oxygen levels in the flue gas, while also providing complete combustion with well defined flame patterns, burner replacement or repair may be required.

3.0 EQUIPMENT LIST/SIZE

1(one) Oxygen and combustibles analyzers (as supplied by Thermox Corp. or Teledyne Analytical Instruments Corp.).

4.0 PREDICTED ENERGY SAVINGS

Provided that the flue gas oxygen level for ADU boiler #4 is reduced from the current measured value of 7.9 percent to 3.7 percent the overall efficiency will increase from 86.1 percent to 88.9 percent. For the Lube Oil Complex boiler #1 a flue gas oxygen reduction from the current measured value of 6.3 percent to 3.7 percent will increase the boiler efficiency from 88.5 percent to 90.3 percent. For Lube Oil Complex boiler #2 a flue gas oxygen reduction from 4.3 percent to 3.7 percent will increase the boiler efficiency from 89.8 percent to 90.3 percent. The following shows the total cumulative savings:

ANNUAL ENERGY SAVINGS	
T.O.E.	TONS MAZOUT
448	461

5.0 INVESTMENT AND ASSOCIATED ECONOMIC EVALUATION

The estimated total investment and annual cost savings for purchasing and installing the equipment listed above is listed below for both worldwide and local equipment and utility costs.

INVESTMENT COST		ANNUAL ENERGY COST SAVINGS	
$	LE	$	LE
21,100	47,260	51,664	12,908

6.0 CONCLUSIONS

This ECO will provide a rapid and considerable payout.

7.0 RECOMMENDATIONS

This ECO should be implemented at the earliest opportunity. It will be absolutely necessary to instruct the operators of the boilers in the proper operation of the above improvements, including equipment maintenance and instrument calibration.

STEAM SYSTEM

STUDY THE FEASIBILITY OF COMBUSTION AIR PREHEAT FOR STEAM BOILERS

Annual Savings, TOE	:	457.
Annual Savings, $	:	52,785.
Investment Cost, $	:	400,000.
Payout: Simple, Yrs	:	7.58
DCF, %	:	6.0

ECO-25

1.0 PURPOSE

The purpose of this ECO is to study the feasibility of combustion air preheat for the steam system boilers. The boilers in the lube oil complex already have air preheat systems and are highly efficient in their design, therefore only boiler #4 in the atmospheric distillation was studied. Overall combustion efficiency can be improved on boilers by exchanging stack gas sensible heat with combustion air and thus decreasing fuel firing rates.

2.0 PROCESS DESCRIPTION

As fuel is fired into the combustion chamber of the boiler a portion of the heat that is liberated will be absorbed by the combustion air. The combustion air must be brought up to the theoretical flame temperature before combustion can occur.

When combustion air is supplied at higher temperatures, less heat must be supplied or used to heat up the combustion air. The result is that less fuel need be fired into the boiler combustion chamber.

Combustion air can be preheated by exchanging heat with hot flue gases that leave the stack of the boiler. Frequently, a cold enough process sink does not exist to cool down the flue gases and thus sensible heat is lost to the atmosphere. Combustion air at ambient temperature provides a good cold sink.

A combustion air preheater is an exchanger that does not allow leakage of flue gas into the combustion air or vice versa. Additionally, a combustion air preheater should not create considerable pressure losses in the air of flue gas paths.

The feasibility of an air preheat system is dependent on the amount of heat that is available for recovery to offset the equipment cost. In general, high stack temperatures and high heat load boilers are the best candidates for air preheaters. As either the stack temperature or the boiler load becomes smaller, it is difficult to justify the investment in such equipment.

18

3.0 EQUIPMENT LIST/SIZE

The equipment listed is for one air preheat system.

1 (one) forced draft fan

1 (one) induced draft fan

1 (one) cast iron recuperative air preheater

1 (one) forced draft oil burner

Air and flue gas duct work

Associated instrumentation and electricals

4.0 PREDICTED ENERGY SAVINGS

The overall efficiency will increase to 92.3 percent when the stack temperature is reduced from 235 °C to 160 °C. The projected energy savings is as follows:

ANNUAL ENERGY SAVINGS	
T.O.E.	TONS MAZOUT
457	471

5.0 INVESTMENT AND ASSOCIATED ECONOMIC EVALUATION

The estimated total investment and annual cost savings for purchasing and installing the equipment listed above is listed below for both worldwide and local equipment and utility costs.

INVESTMENT COST		ANNUAL ENERGY COST SAVINGS	
$	LE	$	LE
400,000	896,000	52,785	13,188

The above is based on a conceptual estimate.

6.0 CONCLUSIONS

This ECO has a marginal payout on a simple payout basis. The stack temperature is not high enough and the boiler load is not large enough to provide any further incentive. The incentive to invest in this ECO must also be weighed against the age of the boiler.

7.0 RECOMMENDATIONS

This ECO is not strongly recommended due to the lack of economic incentive and the age of the boiler.

JOINT ENGINEERING GROUP
OEP / FWEC
FOR: APC

REF. 11-36598
DATE MAY 1986
PAGE
REV.

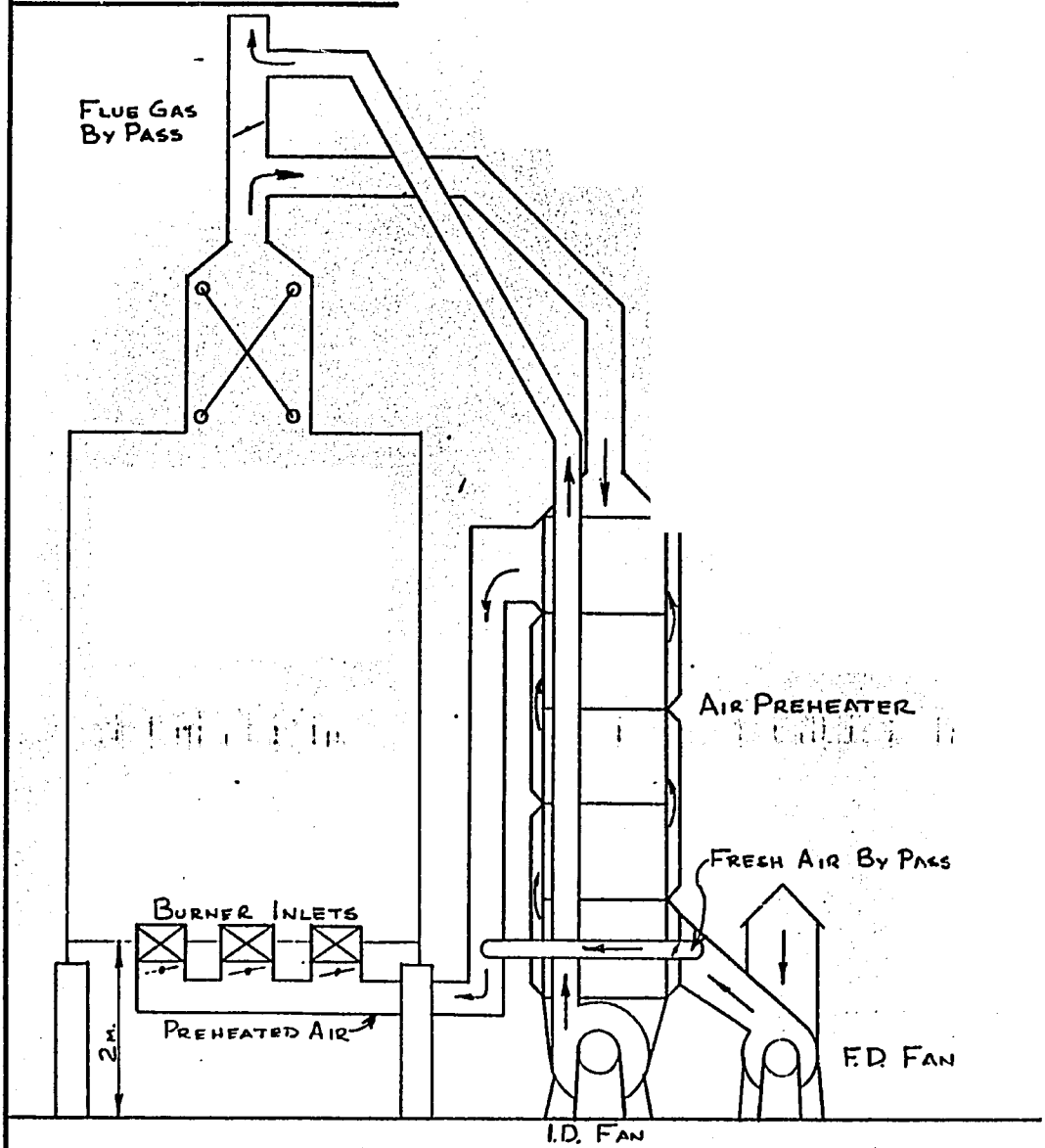

PROCESS SKETCH

ENERGY CONSERVATION OPPORTUNIT
ECO 25

PLANT ALEXANDRIA PETROLEU
LOCATION ALEXANDRIA, EGYPT

LEGEND

EXISTING EQUIPMENT
NEW EQUIPMENT

120

STEAM SYSTEM	Annual Savings, TOE :	4,319
	Annual Savings, $:	498,599
TEST, REPAIR, REPLACE STEAM TRAPS	Investment Cost, $:	475,500
	Payout: Simple, Yrs :	0.95
	DCF , % :	--

ECO-26

1.0 PURPOSE

The purpose of this ECO is to test, repair and replace defective steam traps.

2.0 PROCESS DESCRIPTION

Approximately 13% of the 2100 steam traps in the Atmospheric Distillation Units and in the Lube Oil Complex were tested to determine whether they were operating satisfactorily. Based on the findings, a pattern was developed to determine general condition of the steam traps at the Alexandria Petroleum Company.

The traps were checked by visual and sonic methods. Where steam blow-through was observed, the quantity of steam loss was estimated for the purposes of this ECO.

While a visual check of steam trap operation is the best method, it can only be accomplished, if the discharge is to an open drain or if test valves to atmosphere are installed upstream and downstream of the trap. No test valves were observed in the plant.

The second method of testing used was an ultrasonic listening device. The listening device gives a fairly clear understanding of how the trap is operating.

A normally operating inverted bucket trap can be heard as a definite burst of sound, when the bucket sinks and opens the trap valve, thereby discharging condensate until entering steam floats the bucket and closes the valve. In the presence of extremely low loads the bucket can be heard as a continuous clattering sound. This is sometimes referred to as a "dribbling trap". This is still a normally operating steam trap with little, if any, steam loss. This could also be an indication of an oversized trap, therefore requiring a smaller or restrictive orifice. When a trap is failed open, a continuous high frequency sound can be heard due to steam blowing through its orifice.

A definite cycle rate can be heard when a thermodynamic disc (TD) trap is operating normally as the disc is lifted off the inlet orifice allowing condensate to flow through the outlet passage, and then closes the orifice in the presence of steam. A normal operation would consist in cycles at a rate of one to maximum twenty cycles per minute (average 6

21

to 10). When the cycle becomes shorter, the disc and seat of the trap start to wear at an accelerated rate and causes the trap to fail in the future. A continuous series of abrupt discharges from a thermodynamic disc trap indicates its failure in the open position.

The normal operation sounds of a float and thermostatic trap are difficult to distinguish, as it is a constant flow device with no cycle rate. By shutting off the inlet valve and letting condensate accumulate, and then releasing a large condensate load to the trap, the trap can be heard opening and then modulating down to a steady state flow. The thermostatic air vent in a float and thermostatic trap in many cases opens rather infrequently to release air, making its operational condition quite difficult to determine. A thermostatic trap has a cycle, but is a much more gentle in nature than the inverted bucket or disc trap. A sub-cooling thermostatic steam trap is similar in operation to the float trap. It may have either a bellows or a bimetallic spring as the actuation device, opening and closing the trap according to a set temperature differential.

We did not use a temperature measurement method as it is the least accurate of all test methods. A surface measurement can be made at the inlet and outlet of the trap. This is merely an indication of the corresponding saturation steam pressure upstream of the trap. In the case of a completely failed trap the inlet steam will be blowing through to the trap outlet with little pressure drop. Thus the steam temperature at the inlet and outlet will be much closer to the same reading than for a properly acting trap. In a plant where a condensate recovery system is installed several traps may be tied into a common recovery line. If one trap in this group is blowing steam to its discharge, this steam can cause the discharge temperature of other traps in the group to be higher than normally expected thus leading to an erroneous decision on the condition of the trap. Thus a check of trap performance by temperature must be used with caution.

3.0 EQUIPMENT LIST/SIZE

The following are the results of the trap survey:

Location	Replacement Trap Type	Number	Failed	Satisfactory
Atmospheric Distillation Unit	T.D./Float/T.S.	67	48	19
Lube Oil Units (except Wax Hydro-treated & Tank Farm)	T.D./Float	124	65	59
Wax Hydro-treating	T.D.	50	35	15
Lube Tank Farm	T.D./Bimetallic	38	7	31
Air Preheaters for Lube Boilers	Float	2	2	0
TOTAL Traps Tested		281	157	124

On the basis of the above survey the total number of traps requiring replacement is tabulated below:

Location	Total No. of Traps (Est.)	No. of Traps Requiring Replacement	Size
Atmospheric Distillation Unit	197	48	1/2",3/4"
Lube Oil Units (except Wax Hydro-treated & Tank Farm)	112 638	59 335	3/4" 1/2"
Wax Hydro-treating Tanks/Heaters	120	62	1/2"
Lube Tank Farm	1000	190	1/2", 3/4"
Air Preheaters for Lube Boilers	2	2	2"
TOTAL	2069	696	

The total steam leakage rate in the Alexandria Petroleum Company is estimated at 8673 Kg/hr

123

4.0 PREDICTED ENERGY SAVINGS

The energy savings that will result from proper operation of all steam traps is below.

Annual Energy Savings	
T.O.E.	Tons of mazout
4319	4449

5.0 INVESTMENT AND ASSOCIATED ECONOMIC EVALUATION

The estimated total investment and cost savings are below. Figures are based on worldwide and local equipment and utility costs.

Investment Cost		Annual Cost Savings	
$	LE	$	L.E.
475,500	1,065,000	498,599	124,572

6.0 CONCLUSIONS

The Atmospheric Distillation Units have approximately 200 steam traps. However, a large number of these traps do not have steam flow, either because steam tracers are not in service or because the new condensate recovery system is yet to be commissioned. We strongly recommend that the condensate recovery system be commissioned without further delay.

In the Lube Oil Complex there are three (3) major problems:

1) Excessive back pressure in the condensate header. This is caused by the traps leaking steam and also due to the switch over from Low Pressure to High Pressure steam in the Wax Hydrotreating Unit. A vast majority of the steam tracer traps in the Lube Oil Units do not work, when the drain valves on the condensate manifolds are closed. A large amount of steam is wasted due to opening of the drains. We understand that the Lube Oil Plant has plans for segregating high pressure and low pressure condensates. This plan should be implemented without delay. In addition, all the defective traps should be replaced to eliminate the steam leakage, and thus reducing the back pressure.

2) The leakage problem in the Wax Hydrotreating Unit, caused by use of H.P. steam, should be studied in detail and eliminated by resorting to other alternates (see ECO-23).

3) The two large (2") traps at the Air Preheaters for the boilers are leaking a large amount of steam causing excessive vibrations in the condensate return system. Therefore, condensate from these traps is presently being drained to the sewer. These traps should be replaced as soon as possible and condensate returned to

124

the condensate collection system.

The testing, repair and replacement of steam traps has a rapid payout and is therefore a very attractive ECO.

7.0 RECOMMENDATIONS

This ECO should be implemented immediately.

126

STEAM SYSTEM

INSTALLATION OF A CONDENSATE RECOVERY SYSTEM FOR ADU #2, ADU #3, ADU #4, AND THE VRU

Annual Savings, TOE	:	1,805.
Annual Savings, $	:	208,338.
Investment Cost, $	:	87,230.
Payout: Simple, Yrs	:	0.42
DCF , %	:	--

ECO-27

1.0 PURPOSE

The purpose of this ECO is to collect the steam condensate from the Atmospheric Distillation Unit Nos. 2,3,4, and the Vapor Recovery Unit. The recovered condensate will be sent hot to the Deaerator. This will help to conserve the energy by reducing the need to demineralize raw water, and will also lower the steam requirement for heating the water sent to the Deaerator to its operating temperature.

2.0 PROCESS DESCRIPTION

At present, all the condensate from the ADU Nos. 2,3,4 and VRU is sent to the sewer. The refinery is currently in the process of installing a condensate recovery system that will collect 13 tons per hour of condensate and inject it into the Desalter. Our recommendation per ECO Nos. 7 and 19 is to utilize the sour water for the Desalter instead of using steam condensate.

Our calculations indicate that approximately 20 tons per hour of condensate can be recovered. This condensate should be returned to the new condensate vessel and pumped by means of pump 448 into the Deaerator, instead of the Desalter. This will conserve more energy by minimizing the need to demineralize raw water make-up and will lower the steam requirement in the Dearator.

3.0 EQUIPMENT LIST/SIZE

The equipment required is listed below and shown in the sketches included at the end of this ECO.

1. Condensate Vessel:

   Size : 1250 mm diameter x 2800 mm T/T
   Design: 125 ^{o}C, 3.5 kg/cm^2 (343 kPa)

2. Pumps: (use existing pumps 448)

   Capacity: 25 M^3/hr.
   Differential Head : 116.2 M

126

3. Piping

A. Existing 6" condensate return header is adequate.

B. A new 3" pipe will be required from condensate pumps 448 to the Deaerator.

C. New cooling water piping to be 6".

4. Vent Condenser

One shell mounted above Condensate Vessel.

Area : 60 M^2
Design: Tubes - 7.0 kg/cm^2 (686 kPa)
Shell - 3.5 kg/cm^2 (343 kPa)

5. Instrumentation

As shown on sketch.

4.0 PREDICTED ENERGY SAVINGS

The anticipated annual energy savings after this system is installed is below:

Annual Energy Savings	
T.O.E.	Tons Mazout
1,805	1,859

5.0 INVESTMENT AND ASSOCIATED ECONOMIC EVALUATION

The estimated total investment and cost savings are below. Figures are based on worldwide and local equipment and utility costs.

Investment Cost		Annual Energy Cost Saving	
$	LE	$	LE
87,230	195,400	208,338	52,052

6.0 CONCLUSIONS

Installation of a condensate recovery system has a rapid payout and is therefore a very attractive ECO.

7.0 RECOMMENDATIONS

This ECO should be implemented immediately.

127

JOINT ENGINEERING GROUP
OEP / FWEC
FOR: APC

REF. 11-36598
DATE MAY 1988
PAGE
REV.

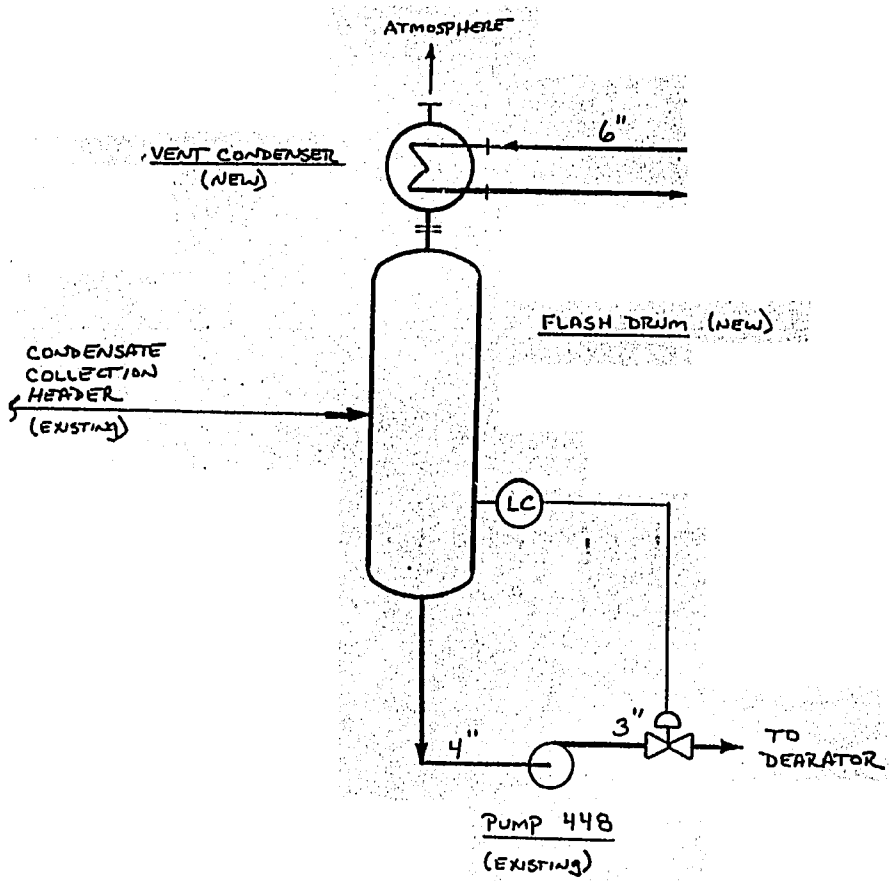

LEGEND

EXISTING EQUIPMENT
NEW EQUIPMENT

PROCESS SKETCH

ENERGY CONSERVATION OPPORTUNITY:

ECO 27

PLANT APC

LOCATION ALEXANDRIA, EGYPT

VB

GENERAL

INVESTIGATE USE OF A GAS TURBINE TO SUPPLEMENT THE POWER SUPPLY

Annual Savings, TOE	:	--
Annual Savings, $	:	4,784,000
Investment Cost, $	:	14,629,100
Payout: Simple, Yrs	:	3.06
DCF , %	:	19.5

ECO-28A

1.0 PURPOSE

The purpose of this ECO is to generate the electricity required by the refinery at the refinery. This will prevent shutdowns due to power drops or power outages, and allow the refinery to use the outside electrical supply as an emergency backup source.

2.0 PROCESS DESCRIPTION

Due to the difficulties associated with ten power failures a year, the refinery has developed an interest in supplying its own power. This can be achieved by either a steam or gas turbine. As a new natural gas network is in the design stages, APC has expressed a preference for a gas turbine. Accordingly, this ECO is based on incorporation of a gas turbine capable of supplying the design refinery electrical requirements, as well as supplying approximately 10 MW to the adjacent cement plant. The design refinery electric demand is 16 megawatt-hours per hour. The cement plant demand is assumed to be 14 megawatt-hours per hour or greater. Therefore, the gas turbine design will be based on 30 megawatts.

The refinery will be able to reduce its own electrical energy costs directly. In addition, the cash flows received from the sale of electricity to the cement plant will act as a direct credit in helping pay out the gas turbine investment cost.

3.0 EQUIPMENT LIST/SIZE

The gas turbine required for this ECO is defined as a complete package, based on a design of 30 megawatt-hours per hour, and the necessary electrical tie-in equipment.

4.0 PREDICTED ENERGY SAVINGS

In-house electrical generation is generally an energy-intensive energy process; more joules of power are needed to make electricity at the refinery than are needed by hydroelectric, steam and other facilities outside the refinery. The cost of producing electricity, however, is lower per MW than the cost to purchase. This savings, plus the savings of eliminating downtime, make this ECO even more attractive than the cost savings per MW alone.

5.0 INVESTMENT AND ASSOCIATED ECONOMIC EVALUATION

The total investment cost to purchase and install the necessary equipment and materials described herein, as well as the annual cost savings are given below. Figures are based on worldwide and local equipment and utility costs.

Investment Cost	Annual Cost Savings
$	$
14,629,100	4,784,000

When generating 30 MW of electricity, approximately 70,983,400 M^3 of natural gas will be consumed annually. Estimated overall cost per MWH works out to be $23.07, when using worldwide utility costs and 8,000 hours per year.

CONCLUSIONS

A gas turbine generating electricity capable of supplying the refinery with the required demand will increase overall production efficiency. The refinery is presently plagued with many instances of undervoltage which requires turndown conditions. In addition, about ten power failures a year are encountered which total to about 3.2 hours per year. This loss of production has a cost which has not been included as a credit towards energy savings, but if calculated, would make that value even larger.

7.0 RECOMMENDATIONS

The Ministries of Petroleum and Electricity should work out an arrangement which will allow the refinery to generate electricity and sell the excess to the cement plant. If such an agreement is achieved, this ECO should be pursued. In addition, ECO-02 should also be pursued as the recovered and scrubbed flare gas can be used, along with natural gas, for use as fuel to the gas turbine.

130

GENERAL

INVESTIGATE USE OF A GAS TURBINE WITH WASTE HEAT RECOVERY TO SUPPLEMENT THE POWER SUPPLY

Annual Savings, TOE	:	--
Annual Savings, $	:	6,256,000
Investment Cost, $	:	31,610,000
Payout: Simple, Yrs	:	5.0
DCF , %	:	9.0

ECO-28B

1.0 PURPOSE

The purpose of this ECO is to continually generate the electricity required by the refinery at the refinery. This will prevent shutdowns due to power drops or power outages, and allow the refinery to use the outside electrical supply as an emergency backup source.

A waste heat boiler is included with the gas turbine in order to improve the overall turbine efficiency.

2.0 PROCESS DESCRIPTION

Due to the difficulties associated with ten power failures a year, the refinery has developed an interest in supplying its own power. This can be achieved by either a steam or gas turbine. As a new natural gas network is in the design stages, APC has expressed a preference for a gas turbine. Accordingly, this ECO is based on incorporation of a gas turbine capable of supplying the design refinery electrical requirements, as well as supplying approximately 10 MW to the adjacent cement plant. The design refinery electric demand is 16 megawatt-hours per hour. The cement plant demand is assumed to be 14 megawatt-hours per hour or greater. Therefore, the gas turbine design will be based on 30 megawatts.

The refinery will be able to reduce its own electrical energy costs directly. In addition, the cash flows received from the sale of electricity to the cement plant will act as a direct credit in helping pay out the gas turbine investment cost.

3.0 EQUIPMENT LIST/SIZE

The gas turbine required for this ECO is defined as a complete package, based on a design of 30 megawatt-hours per hour, and the necessary foundations, controls, and electrical tie-in equipment.

The gas turbine package is to contain a waste heat recovery section. Steam production is estimated to be 100,000 lb/hr (45,360 kg/hr), and includes the steam necessary for dearation.

Gas turbine section to generate approximately 20 MW. Waste heat boiler section to generate the remaining 10 MW.

131

4.0 PREDICTED ENERGY SAVINGS

In-house electrical generation is generally an energy-intensive energy process; more joules of power are needed to make electricity at the refinery than are needed by hydroelectric, steam and other facilities outside the refinery. The cost of producing electricity, however, is lower per MW than the cost to purchase. This savings, plus the savings of eliminating downtime, make this ECO even more attractive than the cost savings per MW alone.

5.0 INVESTMENT AND ASSOCIATED ECONOMIC EVALUATION

The total investment cost to purchase and install the necessary equipment and materials described herein, as well as the annual cost savings are given below. Figures are based on worldwide and local equipment and utility costs.

Investment Cost	Annual Cost Savings
$	$
31,610,000	6,256,000

When generating 30 MW of electricity, approximately 47,322,300 M^3 of natural gas will be consumed annually. Estimated overall cost per MWH works out to be $ 16.94, when using worldwide utility costs and 8,000 hours per year.

CONCLUSIONS

A gas turbine package, generating electricity capable of supplying the refinery with the required demand, will increase overall production efficiency. The refinery is presently plagued with many instances of undervoltage which requires turndown conditions. In addition, about ten power failures a year are encountered which total to about 3.2 hours per year. This loss of production has a cost which has not been included as a credit towards energy savings. The credit, if calculated, would make the savings even larger.

7.0 RECOMMENDATIONS

The Ministries of Petroleum and Electricity should work out an arrangement which will allow the refinery to generate electricity and sell the excess to the cement plant. If such an agreement is achieved, this ECO should be pursued. In addition, ECO-02 should also be pursued as the recovered and scrubbed flare gas can be used, along with natural gas, for use as fuel to the gas turbine.

132

GENERAL

CAPACITOR INSTALLATION
TO IMPROVE POWER FACTOR
IN THE REFINERY
(EXCLUDING LUBE COMPLEX)

Annual Savings, TOE	:	398.
Annual Savings, $	:	67,850.
Investment Cost, $	:	627,370.
Payout: Simple, Yrs	:	9.25
DCF , %	:	2.0

ECO-29

1.0 PURPOSE

The purpose of this ECO is to improve the existing electrical system power factor from the current, reported and spot-checked value of 0.7 to 0.8 to an improved value of 0.9 or greater.

The proposed capacitor banks installation (i.e. improved higher power factor) will reduce electrical system voltage drops and associated I^2R losses in system cabelling transformers, reactors, etc.

This ECO as well as ECO-33 both serve to provide a more economical and efficient electrical system. Only one of these ECO's is necessary to achieve this outcome. Results from these ECO's are not additive.

2.0 PROCESS DESCRIPTION

The refinery's electrical system consists of a 66 kV - 11 kV main transformer station and plant substations as noted on the following one-line diagram.

To improve the power factor, P.F. relay controlled capacitor banks should be connected to unit substation busses. Depending on load fluctuations, the capacitors shall be switched in or out on 2 steps as required per final load study.

3.0 EQUIPMENT LIST/SIZE

Electrical equipment required for this ECO will be 2 step capacitor banks of required kVAr and voltage rating, P.F. relay controlled circuit breakers, fused switches and cabelling as required.

	Capacitor Banks			Switchgear	Controllers
	kVAr	kV	Steps	Units	Units
CD-4	4-300	11	2	4	2
CD-3	4-200	6.3	2	4	2
E. Area	2-200	0.5	1	2	2
OSBL	2-250	11	2	2	1
CW	2-250	11	2	2	1

4.0 PREDICTED ENERGY SAVINGS

Based on plant estimates of up to 10% energy loss in power system cabelling, transformers, etc, a 25% improvement in power factor would reduce the system losses by 40%.

Plant Annual kWh	Reduced Estimated System Losses	Savings kWh	Savings T.O.E.[1]
39,447,900	4%	1,577,916	398

5.0 INVESTMENT AND ASSOCIATED ECONOMIC EVALUATIONS

The estimated total investment and annual cost savings for implementing this ECO are as follow

Investment Cost $	Annual Cost Savings $	Annual Cost Savings LE
627,370	67,850	26,825

6.0 CONCLUSIONS

In addition to above noted energy savings, i.e. improved system I^2R losses, there are additional benefits:

a) Improved electrical system capacity for future expansions.

b) The reduced voltage drop may require lowering transformer taps for proper system voltages.

c) Improved voltage drop during large motor startups.

Overall, however, the economic incentive for implementing this ECO is poor.

7.0 RECOMMENDATIONS

Do not implement this ECO due to an unattractive payout.

---

[1] Electrical T.O.E. values include a typical 34% efficiency factor and correspond to generating electricity using a condensing steam trubine system.

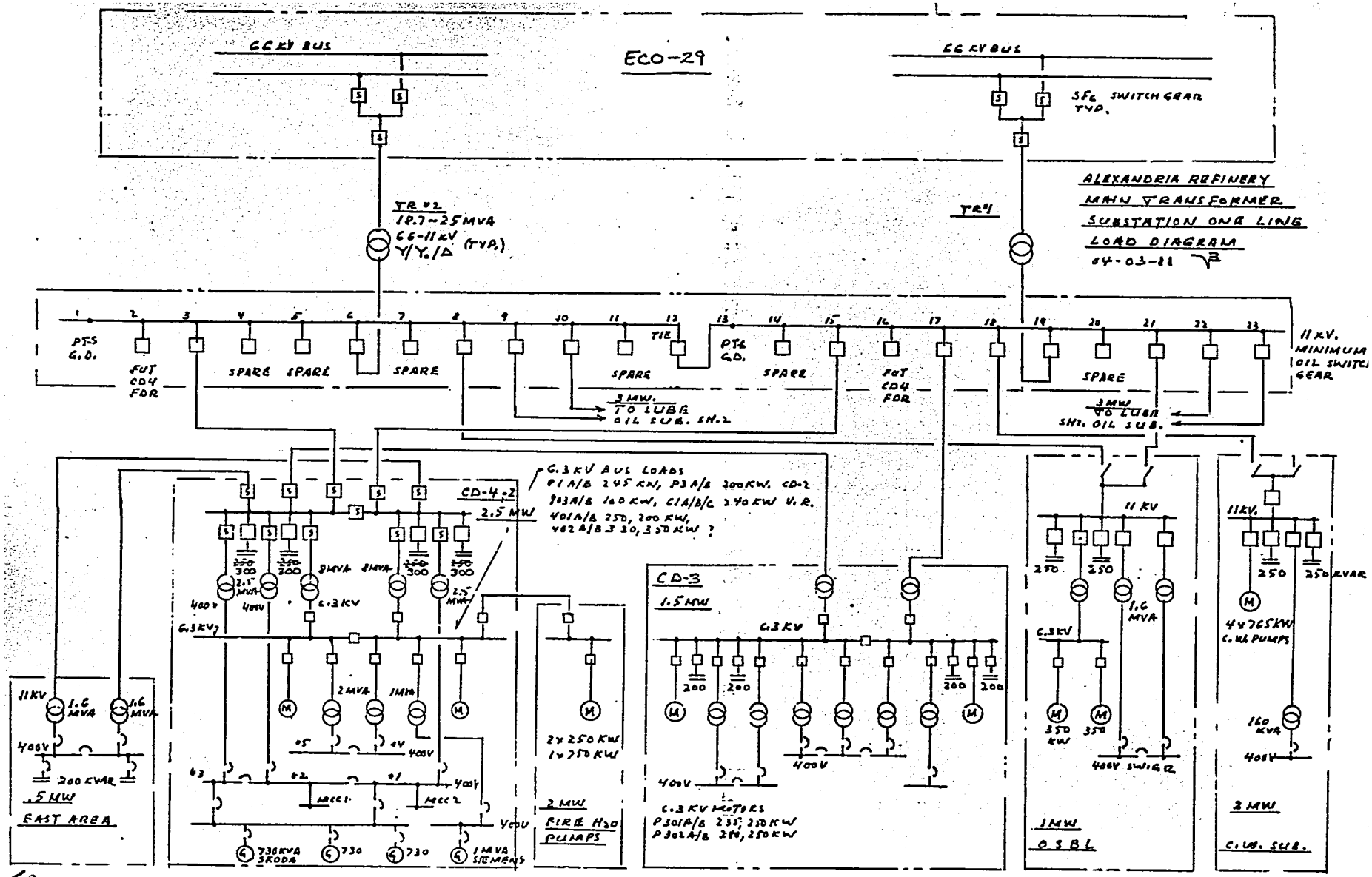
ECO-29
66 KV BUS
66 KV BUS
SF6 SWITCHGEAR TYP.
ALEXANDRIA REFINERY
MAIN TRANSFORMER
SUBSTATION ONE LINE
LOAD DIAGRAM
04-03-81
TR #2
18.7-25 MVA
66-11 KV
Y/Y0/Δ (TYP.)
TR #1
PTS G.D.
FUT CD4 FDR
SPARE
SPARE
SPARE
SPARE
TIE
PTS G.D.
SPARE
FUT CD4 FDR
SPARE
3 MW.
TO LUBE OIL SUB. SH.2
3 MW
TO LUBE SH2. OIL SUB.
11 KV. MINIMUM OIL SWITCHGEAR
CD-4.2
2.5 MW
6.3 KV BUS LOADS
P1 A/B 245 KW, P3 A/B 200 KW. CD-2
P03 A/B 160 KW, C1 A/B/C 240 KW V.R.
401 A/B 250, 200 KW,
402 A/B 320, 350 KW ?
6.3 KV
400 V
2 MVA
1 MVA
MCC1
MCC2
2 x 250 KW
1 x 250 KW
2 MW
RIRE H2O PUMPS
CD-3
1.5 MW
6.3 KV
200
400 V
6.3 KV MOTORS
P301 A/B 233, 250 KW
P302 A/B 280, 250 KW
11 KV
250
1.6 MVA
350 KW
400 V SWGR.
1 MW
OSBL
11 KV.
250 KVAR
4 765 KW
C.W. PUMPS
160 KVA
400 V
3 MW
C.W. SUB.
11 KV
1.6 MVA
400 V
200 KVAR
.5 MW
EAST AREA
738 KVA SKODA
730
730
1 MVA SIEMENS

GENERAL

INSTITUTE A PERMANENT PROGRAM FOR STEAM TRAP TESTING

Annual Savings, TOE	:	1,283
Annual Savings, $	:	148,044
Investment Cost, $	:	214,738
Payout: Simple, Yrs	:	1.45
DCF , %	:	--

ECO-30

1.0 PURPOSE

The purpose of this ECO is to institute a permanent program for steam trap testing in order to replace defective traps as soon as practical.

2.0 PROCESS DESCRIPTION

Based on the results of testing steam traps covered in a previous ECO, it is evident that a permanent program should be started to test all steam traps. Much of the efforts to save steam in the plant can be wasted if the steam traps are not working properly.

The program must be a permanent one and should be under the control of the plant energy coordinator and his committee. At a very minimum each trap must be tested once per year; however, a more frequent period of testing is strongly recommended. It is preferable to test traps operating over 1600 kPa (16 Bar) weekly, those operating from 200 to 1600 kPa (2 to 16 Bar) monthly, and lower pressure traps at least once annually. A trap item number and permanent metal tag must be assigned to each trap and records maintained to indicate testing dates, results and trap replacement.

A sample inspection check list is given on the next page.

Frequency: As noted on Page 1.

Items to Inspect

1. Has trap failed in closed position?

   Feel trap. If cold, trap is bad.

2. Check system downstream of trap.

   Close valve to return line and open valve to atmosphere. If a considerable amount of water droplets are issuing from trap together with steam, trap is working.

3. Check system - using an ultrasonic tester or stethoscope.

   Intermittent sounds coming from a bucket trap, a thermostatic trap, and a thermodynamic trap mean that trap is functioning properly.

4. If trap is not functioning properly:

   Use exact replacement parts as manufactured by trap maker.

   Replace all gaskets. Make sure that the metal surfaces are absolutely clean before applying gaskets.

   Connect correct type of trap to steam pressure at which it operates and test it to make sure that it is in proper working order.

Simple devices, like a slide rule similar to Spirax-Sarco "Select a Trap" are available to replace failed traps.

The benefits of a permanent trap testing program can be as follows:

1. Reduction in steam losses.

2. Life expectancy of a trap can be determined from plant records before repair or replacement is required.

3. The best trap for particular services can be determined by analysis of records of performance.

4. Cost figures are available to support how much a particular trap is costing.

5. Only 5 percent of the plant steam traps will require attention at one time, thus less maintenance is required.

137

3.0 EQUIPMENT LIST/SIZE

- Steam traps as required.
- Identification tags.
- Ultrasonic tester (Sonic, Model 3000 M).

4.0 PREDICTED ENERGY SAVINGS

From the steam trap survey covered by ECO 26, it was noted that the estimated steam loss at this time from defective traps for the entire refinery is 8,673 Kg/hr. Assuming that the traps are tested once a year and the average life expectancy of a trap is 7 years, the steam loss that can be avoided by instituting a permanent steam trap testing program is estimated to be 1844 Kg/hr.

Therefore, energy savings that result from a permanent steam trap testing program is estimated to be as follows:

Annual Energy Savings	
T.O.E.	Tons mazout
1283	1321

5.0 INVESTMENT AND ASSOCIATED ECONOMIC EVALUATION

The estimated total investment and annual cost savings for repairing all steam traps is below. Figures are based on worldwide equipment and utility costs.

Number of defective steam traps to replace annually	296
Cost to replace traps, $	208,100
Cost to tag traps and purchase ultrasonic test equipment, $	6,638

Total Investment		Annual Cost Savings	
$	LE	$	LE
214,738	483,160	148,044	36,988

Representatives of steam trap manufacturers will offer a service to survey steam traps in plants. This service costs approximately $8 to $10 per trap. During our energy audit, it was noted that sophisticated trap testing instruments are available in the Refinery Lube Oil Complex. We strongly recommend that these instruments be used by the inspectors to check the steam traps on a regular basis.

138

6.0 CONCLUSIONS

The initiation and carrying out of a permanent program to test, repair and replace steam traps has a very attractive payout. This ECO is essential to efficient plant operation and must be carried out year after year.

7.0 RECOMMENDATION

This ECO should be initiated immediately and carried out continuously.

134

GENERAL

STUDY THE EFFECT OF INSULATION ON HEAT LOSS FROM PIPES

Annual Savings, TOE	:	Not Applicable
Annual Savings, $	:	"
Investment Cost, $	:	"
Payout: Simple, Yrs	:	"
DCF , %	:	"

ECO-31

1.0 PURPOSE

The purpose of this ECO is to study the effects of insulation on heat loss in piping and develop a chart to be used by the plant for all future piping insulation applications.

2.0 PROCESS DESCRIPTION

A chart was developed using the Heatalyzer Economic Thickness Insulation computer program which indicates the optimum insulation requirements for different line sizes at various temperature ranges. The chart covers a range from 50 °C through 450 °C for line sizes 0.75 inch diameter through 16 inch diameter. Mineral wool insulation material with galvanized steel cover is the basis for the chart.

This chart is to be used in the future by plant personnel to specify insulation thickness on new or reinsulated lines.

3.0 EQUIPMENT LIST/SIZE

The chart on the following page was developed.

OPTIMUM INSULATION THICKNESS AND ENERGY SAVINGS PER METER

TEMPERATURE - DEGREES C (F)

PIPE SIZE (INCHES)	50 (122)	100 (212)	150 (302)	200 (392)	250 (482)	300 (572)	350 (662)	400 (752)	450 (842)		
0.75	25	25	25	37.5	37.5	62.5	75	75	75	mm	Thickness
	164	567	1078	1726	2470	3399	4464	5710	7126	kJ	Energy Savings
1	25	25	25	37.5	37.5	62.5	75	75	75	mm	Thickness
	200	692	1317	2109	3024	4167	5480	7000	8775	kJ	Energy Savings
1.5	25	25	37.5	37.5	62.5	75	75	75	75	mm	Thickness
	277	957	1824	2929	4274	5840	7671	9825	12350	kJ	Energy Savings
2	25	25	37.5	50	62.5	75	75	75	75	mm	Thickness
	337	1164	2262	3607	5222	7148	9404	12065	15190	kJ	Energy Savings
3	25	37.5	37.5	62.5	75	75	75	87.5	100	mm	Thickness
	474	1666	3182	5116	7413	10133	13367	17238	21794	kJ	Energy Savings
4	25	37.5	37.5	62.5	75	75	100	100	100	mm	Thickness
	591	2077	3972	6398	9287	12719	16890	21757	27493	kJ	Energy Savings
6	25	37.5	50	62.5	75	75	100	100	100	mm	Thickness
	829	2916	5645	9028	13143	18051	24038	31046	39325	kJ	Energy Savings
8	37.5	37.5	50	62.5	87.5	100	100	100	100	mm	Thickness
	1070	3675	7126	11418	16704	23034	34035	39551	50171	kJ	Energy Savings
10	37.5	37.5	50	75	87.5	100	100	100	100	mm	Thickness
	1298	4452	8657	13952	20358	28203	37371	48406	61473	kJ	Energy Savings
12	37.5	37.5	62.5	75	87.5	100	100	100	100	mm	Thickness
	1509	5180	10134	16244	23730	32809	43655	56599	71934	kJ	Energy Savings
14	37.5	37.5	62.5	75	87.5	100	100	100	100	mm	Thickness
	1638	5622	11007	17653	25806	35699	47525	61642	78371	kJ	Energy Savings
16	37.5	50	62.5	75	100	100	100	100	100	mm	Thickness
	1841	6394	12382	19874	29142	40249	53613	69570	88479	kJ	Energy Savings

4.0 PREDICTED ENERGY SAVINGS

Refer to insulation table. Energy savings between bare and insulated pipe (kJ) is given in the insulation table for each pipe size and temperature. Multiply this value by the length of pipe (M) and then by yearly hours of operation to obtain kJ saved per year.

5.0 INVESTMENT AND ASSOCIATED ECONOMIC EVALUATION

Not applicable to this ECO.

6.0 CONCLUSIONS

Based on the results of ECO's - 02, 10, and 16 which cover the addition of insulation to the existing lines in the plants, it is concluded that the use of the Insulation Thickness chart should be followed by the plant when installing new hot piping insulation.

7.0 RECOMMENDATION

This ECO should be implemented by having the plant use the chart included in this ECO for all future piping insulation application.

GENERAL	Annual Savings, TOE :	Not
	Annual Savings, $:	Required
FUEL/AIR RATIO CONTROLLERS	Investment Cost, $:	(See Text)
FOR STEAM BOILERS	Payout: Simple, Yrs :	"
AND FURNACES	DCF, % :	"

ECO-32

1.0 PURPOSE

The purpose of this ECO is to examine the need for fuel air ratio controllers. Fuel/air ratio controllers have been used in the boiler and process fired heater industry for many years to maintain combustion air flow as boiler loads are modulated.

2.0 PROCESS DESCRIPTION

Fuel to air ratios can be calculated for various fuels to provide a given flue gas oxygen level. As the process load is modulated, not only the fuel flow rate should be adjusted, but also the air flow rate. Provided that the optimum flue gas oxygen level is maintained it can also be expected that the optimum efficiency will be achieved.

In general, fuel/air ratio control schemes consist of a controller that receives a signal from a temperature transmitter connected to the process outlet. The setpoint of the transmitter is the desired process outlet temperature. The output of the temperature transmitter supplies the setpoint for a fuel flow transmitter. As the outlet temperature of the process rises above the desired setpoint temperature, the fuel flow is decreased. As the outlet temperature drops below the setpoint temperature, the fuel rate is increased. The ratio controller receives the increased or decreased flow rate of fuel from a flow transmitter that senses a DP cell across a meter in the fuel supply line to the burners. The ratio controller also receives a signal from a flow transmitter that senses a DP cell installed across a meter in the air supply duct. A damper in the duct work or the inlet dampers of the forced draft fan are adjusted with an actuator in accordance with the output of the ratio controller.

A very essential part of the control scheme is the lead/lag system. The lead/lag system prevents the accidental detonation of the boiler or process fired heater. The lead/lag system assures that if the fuel rate is increased, the air flow rate is increased first. If the fuel rate was increased before the air rate, it is likely that combustible material would enter the combustion chamber without sufficient air to complete combustion. If the air rate is then increased an

143

uncontrolled fire or explosion can occur. Where fuel gas is used an explosion is very likely, if this sequence of events is allowed to occur. Where fuel oil is used a fire in the burner plenum could be expected.

The lead/lag system also assures that if the fuel demand is decreased, the air rate is decreased after the fuel rate. If the air was decreased first the possibility of combustibles entering the combustion chamber without sufficient air to complete combustion is probable. This can also cause damage to the equipment and is extremely dangerous.

In more sophisticated systems, the fuel/air ratio is trimmed with a signal from the oxygen analyzer sensing the combustion chamber or the stack flue gas. In the most sophisticated systems, when the fuel composition changes either a fuel specific gravity indication or a fuel heating value indication is used to adjust the ratio.

Ultimately, the intention of these systems is to maintain the flue gas oxygen level at a minimum so that the highest level of efficiency can be maintained. Additionally, the systems are intended to provide a high level of safety while maintaining efficiency.

It must be noted that fuel/air ratio control systems are not used on natural draft process fired heaters. Although, attempts have been made to use the air side burner pressure drop as an indication of air flow rate, these attempts have not been successful.

Fuel/air ratio systems are most useful when load changes are frequent and erratic. In general, fuel/air ratio systems become economical when operator attention is at a minimum, and the instrumentation cost can be offset by reducing manpower.

3.0 EQUIPMENT LIST/SIZE

Assorted controllers,indicators,transmitters, meters, actuators, electricals and pneumatics. Refer to the attached sketch.

4.0 PREDICTED ENERGY SAVINGS

Indeterminate.

5.0 INVESTMENT AND ASSOCIATED ECONOMIC EVALUATION

Investment in a fuel/air ratio control system is not recommended. Refer to Sections 6.0 and 7.0.

144

6.0 CONCLUSIONS

Fuel/air ratio control systems can save a considerable amount of fuel and operating cost. However, if boilers or process fired heaters are properly attended by operating staff the same savings can be realized, without investment in a fuel/air ratio control system. In the refinery, boiler loads do not change from one level of operating load to another at a rate rapid enough to prevent operating staff from being able to maintain the proper ratio of excess air. Fuel/air ratio control systems require a good amount of attention on the part of instrument technicians. If this attention is not given to the ratio control system, it is reasonable to assume that no improvement over a boiler without a fuel/air ratio system will be achieved.

7.0 RECOMMENDATIONS

This ECO is not recommended. Although, as stated in other ECO's, oxygen analyzers and fuel metering are very strongly recommended instead. These will provide the operating staff with sufficient information to maintain efficient operation of the boilers or process fired heaters. In addition, proper training and supervision of operators cannot be overemphasized.

145

JOINT ENGINEERING GROUP
OEP / FWEC
FOR: APC

REF. 11-36598
DATE MAY 1988
PAGE
REV.

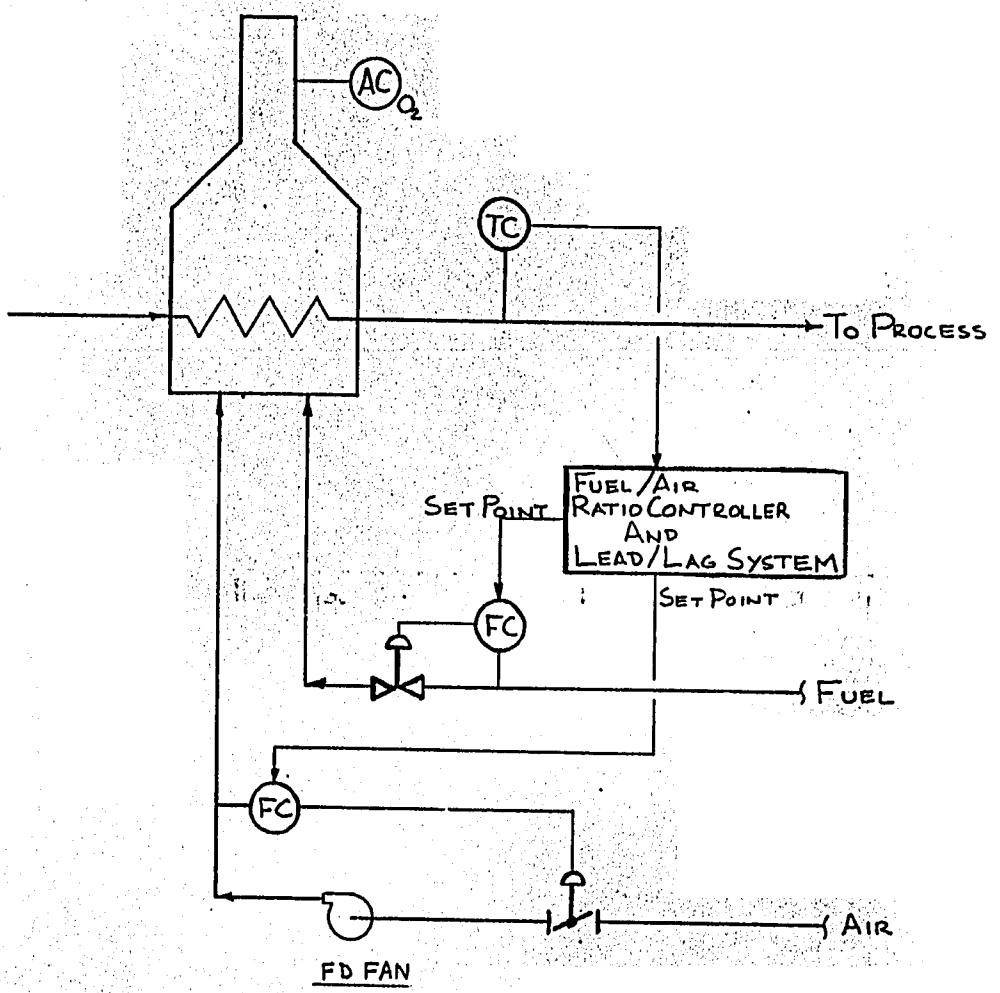

PROCESS SKETCH

ENERGY CONSERVATION OPPORTUNITY

ECO 32

PLANT APC

LOCATION ALEXANDRIA, EGYPT

LEGEND

EXISTING EQUIPMENT
NEW EQUIPMENT

146

GENERAL

INVESTIGATE ENERGY SAVINGS BY CHANGING DRIVE CONTROLS IN REFINERY (EXCLUDING LUBE COMPLEX)

Annual Savings, TOE	:	1,617
Annual Savings, $	:	275,888
Investment Cost, $	:	1,879,800
Payout: Simple, Yrs	:	6.81
DCF , %	:	4.5

ECO-33

1.0 PURPOSE

The purpose of this ECO is to incorporate variable frequency (speed) controllers into plant electrical distribution system. The variable frequency/voltage controllers (VFC) will match kW consumption to load requirements and thus provide considerable kW/kVAr savings.

This ECO as well as ECO-29 both serve to provide a more economical and efficient electrical system. Only one of these ECO's is necessary to achieve this outcome. Results from these ECO's are not additive.

2.0 PROCESS DESCRIPTION

Based on verbal information received from refinery personnel and power factor (PF) spot checks, some motor drives in the refinery appear under-utilized at apparent 2/3 of full load or less.

Installation of variable speed drives (VFD's) will provide:

a) Soft start i.e., no star-delta or start-up resistor controllers are required.
b) Corrected motor power factor.
c) Energy savings by matching power consumption to load requirements.
d) Savings by eliminating restrictive control vanes, throttling valves, recirculation systems.

Controllers do require reasonably clean, ventilated rooms, as in a normal substation area. The variable frequency controller (VFC) would replace existing control equipment. Before implementation a more detailed study is required for each piece of equipment to determine the status of existing equipment to be deleted and/or retained.

3.0 EQUIPMENT LIST/SIZE

The variable frequency/voltage controllers shall be supplied complete with digital controllers, required load sensors, power fuses and disconnect contactors. Isolating transformers may be required depending on supply system. The controllers shall be programmed for expected loads.

Three items that appear to be good candidates for the addition of VFC's are below:

	Motor size, kW	kV	Controller, kW
GB-9105 A/B	160 ea.	6.3 ea.	200 ea.
GC-4001	1750	"	2000 (1)
New MEK comp.	2100	"	2400 (2)

(1) plus 2, 2 MVA transformers.
(2) plus 2, 2.5 MVA transformers.

4.0 PREDICTED ENERGY SAVINGS

Lacking precise operating data, the energy savings can only be estimated based on similar applications in the General Electric computer program for VFC applications.

For fans and pumps it generally varies from 5-20% depending on load variables, etc.

Annual Energy Savings	
T.O.E.[1]	MWH
1,617	6,416

5.0 INVESTMENT AND ASSOCIATED ECONOMIC EVALUATION

The investment cost and annual energy cost savings are below. Cost savings are based on worldwide and local utility costs. A 20% savings due to load reduction has been assumed.

Investment Cost	Annual Energy Cost Savings	
$	$	LE
1,879,800	275,888	109,072

6.0 CONCLUSIONS

The incorporation of VFC's into the refinery distribution system will:

a) reduce power losses in distribution system and in processing equipment;
b) reduce capacitor's size, as recommended in ECO-29;
c) eliminate need for reduced voltage starting equipment;
d) improve process equipment control.

Although this ECO does not appear attractive, based on the three applications listed in Section 3.0, further studies

---

[1] Electrical T.O.E. values include a typical 34% efficiency factor and correspond to generating electricity using a condensing steam turbine system.

should be made at APC by getting operating data on large motors over an extended period of time and determining which motors are under-utilized. These motors would probably be good candidates for VFC's.

7.0 RECOMMENDATION

This ECO should not be implemented at this time. However, a more complete study should be undertaken at the refinery, as mentioned above.

GENERAL

IMPROVE, ADD OR FIX INSTRUMENTATION TO BE ABLE TO PROPERLY MONITOR AND CONTROL ENERGY CONSUMPTION

Annual Savings, TOE	:	924.
Annual Savings, $	:	111,541.
Investment Cost, $	:	247,500.
Payout: Simple, Yrs	:	2.22
DCF , %	:	29.0

ECO-34

1.0 PURPOSE

The purpose of this ECO is to improve/add/fix instrumentation, as required, to help conserve energy and to properly monitor its consumption.

2.0 PROCESS DESCRIPTION

A study was made regarding the instrumentation requirements for the plant. This study combined the overall requirements for instrumentation improvements, addition, and fixing. In many cases, the existing instrumentation is inadequate or non-existent and in many cases the existing instruments are not in working order.

3.0 EQUIPMENT LIST/SIZE

The equipment and material required is described below. The materials of construction are carbon steel, except where it is specified differently.

Combustion & Steam

The flow of steam, boiler feed water, condensate and fuel at each boiler should be measured. In addition, the flow of steam through the sub-headers to each unit should also be measured. The list below is an estimate of what would be necessary to properly monitor and control energy consumption.

6 Temperature Recorders
50 Temperature indicators
20 Flow indicators
3 Level Recording Controllers
20 Pressure Indicators
3 Alarms

Electrical

Portable recording instrument to measure MW, kVAr, and the current (Amperes).

150

4.0 PREDICTED ENERGY SAVINGS

Since this ECO covers the refinery in its entirety, there is no specific energy savings that can be pinpointed. A conservative assumption is to infer that proper instrumentation can reduce the yearly energy consumption by at least half of one percent. The energy savings are listed below.

Electrical Annual Energy Savings	
T.O.E.[1]	MWh
99	393

Mazout Annual Energy Savings	
T.O.E.	Tons
758	781

Fuel Gas Annual Energy Savings	
T.O.E.	Tons
49.1	44.5

LPG Annual Energy Savings	
T.O.E.	Tons
18.0	16.6

5.0 INVESTMENT AND ASSOCIATED ECONOMIC EVALUATION

Annual cost savings are based on the individual energy savings.

The total investment cost to purchase and install the necessary instruments and the associated piping and materials described is below:

Investment		Annual Cost Savings	
$	LE	$	L.E.
247,500	554,400	111,541	28,928

6.0 CONCLUSIONS

The instrumentation at Alexandria Petroleum Company is generally in a satisfactory condition. However, the additional instrumentation listed in Section 3.0 is necessary to effectively monitor energy consumption.

7.0 RECOMMENDATIONS

This ECO should be implemented at the earliest opportunity.

---

[1] Electrical T.O.E. values include a typical 34% efficiency factor and correspond to generating electricity using a condensing steam turbine system.

151

GENERAL

FORM A COMMITTEE TO PLAN AND IMPLEMENT ECO'S

Annual Savings, TOE	:	Not
Annual Savings, $	:	Applicable
Investment Cost, $	:	"
Payout: Simple, Yrs	:	"
DCF , %	:	"

ECO-35

1.0 PURPOSE

The purpose of this ECO is to ensure that the conclusions and recommendations contained within the Audit Report are implemented in a timely manner through the formation of a committee who will be given the responsibility to establish short range and long range plans to implement the in-country housekeeping and investment ECO's as well as the foreign investment ECO's.

2.0 PROCESS DESCRIPTION

Plant management must show its commitment to energy conservation by appointing a committee consisting of representatives from each department of the plant. The chairman of the committee is the energy coordinator for the plant, who should report directly to plant management.

The committee must meet at least once a month (more frequently when it is first getting started) to establish a concrete plan for energy conservation implementation. Its first priority is to begin implementation of low cost in-country housekeeping ECO's and to develop a plan and a budget for the implementation of investment ECO's.

The recommendations and priorities established in the audit report must be carefully studied by the committee to help formulate the most reasonable and effective plan possible for implementation.

Once implementation is begun the committee must continuously monitor the results and compare the savings actually achieved with those originally predicted. In this way the effectiveness of the program and the achievement of previously established goals for reduction in energy consumption can be firmly established.

An example of the systems and methods used to implement this ECO is included in the Appendix.

3.0 EQUIPMENT LIST/SIZE

No new equipment and no new personnel are needed to form the committee.

4.0 PREDICTED ENERGY SAVINGS

This will be a function of the committee's effectiveness in

57

seeing to it that the ECO's recommended in the Audit Report are implemented in a timely manner.

5.0 INVESTMENT AND ASSOCIATED ECONOMIC EVALUATION

None, not applicable to this ECO.

6.0 CONCLUSIONS

The formation of the committee and the appointment of an energy conservation coordinator are crucial initial steps in the establishment of an effective program of energy conservation.

7.0 RECOMMENDATION

Formation of the committee and appointment of the energy conservation coordinator should proceed without delay.

GENERAL

PUBLICITY TO MAKE EMPLOYEES AWARE OF THE IMPORTANCE OF ENERGY CONSERVATION

Annual Savings, TOE	:	Not
Annual Savings, $	:	Applicable
Investment Cost, $	:	"
Payout: Simple, Yrs	:	"
DCF , %	:	"

ECO-36

1.0 PURPOSE

The purpose of this ECO is to make all employees of the company aware of the importance of energy conservation through the use publicity, memos, newsletters, etc. Doing this will help insure that each employee will contribute toward making the overall energy conservation program a success.

2.0 PROCESS DESCRIPTION

In any effective energy conservation program, ideas must flow in two directions, from management to the employees and back up to management. Management must take the first step by showing its commitment to energy conservation through publicity such as posters, memos, newsletters, suggestion boxes, and contests/awards for the best energy conservation ideas submitted by employees. Once all employees see that energy conservation is being treated as a serious and important matter by their company, they in turn will act in the same way.

Responsibility for seeing that employees are made aware of the importance of energy conservation must be shared by both plant management and by the committee responsible for energy conservation implementation.

An example of the systems and methods used to implement this ECO is included in the Appendix.

3.0 EQUIPMENT LIST/SIZE

No new equipment and no new personnel are needed to implement this ECO.

4.0 PREDICTED ENERGY SAVINGS

Not applicable to this ECO.

5.0 INVESTMENT AND ASSOCIATED ECONOMIC EVALUATION

A modest annual budget of approximately LE 2,000 should be established to pay for the publicity material (posters, newsletter, etc.) needed to implement this ECO.

6.0 CONCLUSIONS

Although it may not be possible to precisely measure the effectiveness of an employee awareness program, it is nevertheless a most necessary step in establishing the proper mental attitude needed to initiate an effective and comprehensive energy conservation program.

7.0 RECOMMENDATION

Immediately following the formation of the energy conservation committee, a program of employee awareness should be initiated.

ORGANIZATION for
ENERGY
PLANNING

جهاز تخطيط الطاقة

263-0123.01

ENERGY AUDIT
of the
Alexandria Petroleum Company
Alexandria, Egypt
May, 1988
VOLUME 2 of 2 - APPENDICES

Produced through the joint engineering effort of:

* ALEXANDRIA PETROLEUM COMPANY (APC)
* FOSTER WHEELER USA CORPORATION (FWUSA)
* ORGANIZATION FOR ENERGY PLANNING (OEP)

D.E.P. ٢٣٤٠٤ تلكس دولى
1, Aisha El-Taymorya — Garden City, Cairo Phone 355-7113 356-4576 Telex. 23404 O.E.P.
١ شارع عائشة التيمورية ـ جاردن سيتى ـ القاهرة

150

APPENDICES

APPENDIX

1 BASIC ENGINEERING DATA

2 PORTABLE INSTRUMENT LIST

3 ECO-35: FORM A COMMITTEE TO PLAN AND IMPLEMENT ECO's (Pg. 269-326)

4 ECO-36: PUBLICITY TO MAKE EMPLOYEES AWARE OF IMPORTANCE OF ENERGY CONSERVATION (Pg. 327-331)

5 ECO-29: TECHNICAL ARTICLES REFERRING TO POWER FACTOR CORRECTIONS

6 DISCOUNT CASH FLOW GRAPH

7 ECO-02: FLARE GAS RECOVERY (SHELL CANADA)

8 ARTICLES ON ENERGY USE IN REFINERIES

9 ECO-08, 09, 10, 13: CRUDE UNIT AND VRU UNIT PROCESS FLOW SKETCHES

3.7 Basic Engineering Data:

The Basic Engineering Data (B.E.D. Sheets) which will be used during the audit and subsequent design of the various ECO's is given in the pages which follow. The source for the data listed below is as follows:

Utility Cost (Paragraph 3.0)

Fuels - Per Egyptian General Petroleum Corp. and developed by Foster Wheeler from data obtained from Stanford Research Institute.

Electric Power - From Organization for Energy Planning (OEP) and developed by Foster Wheeler from data obtained by Stanford Research Institute.

Steam - Developed by Foster Wheeler from data obtained from Stanford Research Institute.

Water - Developed by Foster Wheeler from data obtained by Stanford Research Institute.

Meteorological Data (Paragraph 4.0)

As developed from data provided by Egyptian Meteorological Authority for a five year period (1978 through 1982).

Minimum Dry Bulb Temp. is average of mean minimum temperatures.

Design Dry Bulb Temperature is average of mean maximum temperatures.

Design Wet Bulb Temperature is determined from Psychrometric Chart using an average relative humidity of 64 percent.

Utility Information (Paragraph 5.0)

Fuel oil specifications - Per Egyptian General Petroleum Corporation.

Sular specifications - Per Egyptian General Petroleum Corporation.

Rule from Electric Billing

Specified by contract between the plants and the Electric Authority.

158

ENERGY CONSERVATION PROJECT

BASIC ENGINEERING DATA

1.0 General:

This form defines the basic engineering data which will provide the technical and economic basis for the evaluation of energy conservation opportunities (ECO's) for the audit.

2.0 Economic Guidelines:

2.1 Operating Time:

2.1.1 Number of operating days per year 333

2.1.2 Number of shifts per day 3, 7 days/week

2.1.3 Normalized number of operating hours per year 8000

2.2 Economic Evaluation Basis:

2.2.1 Payback priority list, simple basis yes

2.2.2 Discounted cash flow yes

Taxes 32%

Inflation 30%

Interest 14%

Required R.O.I 6-8% (if known)

Project Life 10 yr.

Depreciation straight

Salvage Value 2.5% (initial investment)

3.0 Utility Cost :

Utility	Units	Public Sector Domestic Price (L.E.)/Unit	World Price $/Unit(1)
Fuels			
Mazout (#6)	Metric Ton	28	112.07
Sular	Metric Ton	60	150.64
Electric Power	KWH	0.017	0.043
Natural Gas	M^3	0.0264	0.078
Propane (liquid)	M^3	2.24	65.33
Butane (liquid)	M^3	-	102.28
C3/C4 LPG	M^3	1.95	93.04
Fuel Gas	Ton	5.15	96.77
Steam (2)			
(3) High Press.	Metric Ton	3.26	11.66
(3) Med. Press.	Metric Ton	3.11	11.09
(3) Low Press.	Metric Ton	2.94	10.49
Water			
Raw	Metric Ton	0.070	0.18
Cooling	Metric Ton	0.006	0.015

Notes:

(1) Based on "Mid 1987 Prices" provided by the Stanford Research Institute (latest figures to date)

(2) Steam Pressures

HP - 40 ATM or more
MP - 10 ATM to 40 ATM
LP - 3 ATM to 10 ATM

Boiler efficiency assumed to be 75%

(3) The price of condensate or boiler feed water is 10% of the price of steam.

160

4.0 Meterological Data :

4.1 Meteorological Data: (Alexandria Area)

Temperatures:

Minimum Dry Bulb	6 °C
Design Dry Bulb	34 °C
Design Wet Bulb	28 °C

Note: For insulation calculations use dry bulb temperature at 20 °C.

Wind Velocity and Direction: 0 - 15 km/hr Random direction

Winterization Area Classification: None.

Allowance for Earthquake Forces: None.

Rainfall: Less than 10 cm/yr.

Design Humidity (relative): 64% (34 °C/28 °C)

5.0 Utility Information :

5.1 Fuel Oil #6 (mazout):

Temperature (pour point) ,	°F	100.0
	°C	37.8
Specific Gravity @ 15/4 °C		0.990
Viscosity, R I @ 100 °F		2000.0
Sulfur, % by wt.		2.5
Heating Value, J/M Ton		4.077×10^{10}

5.2 Diesel (sular):

Specific Gravity @ 15/4 °C		0.840
Viscosity, R I @ 100 °F		60.0 max
Sulfur, % by wt.		2.0
Heating Value, J/M Ton		4.467×10^{10}
Flash Point P.M. Closed,	°C	65.0

5.3 Natural Gas:

Specific Gravity @ 15/4 °C		0.56 (air = 1.0)
Heating Value, J/M^3		37,256,270

161

5.4 Propane:

Specific Gravity @ 15/4 °C	0.51
Heating Value, kcal/kg	11943
J/M Ton	5.00×10^{10}

5.5 Butane:

Specific Gravity @ 15/4 °C	0.58
Heating Value, kcal/kg	11722
J/M Ton	4.908×10^{10}

5.6 C3/C4 LPG:

Specific Gravity @ 15/4 °C	0.55
Heating Value, kcal/kg	11777
J/M Ton	4.930×10^{10}

6.0 Rules for Electric Billing

The following rules for electric billing (or application of rates) will apply to economic analysis of ECO's which relate in depth to the cost of power. These rules assume a consumption at more than 625 KVA (500 kw), at a voltage level of 380 volts, for industrial uses other than limited lighting.

6.1 Demand Factor

The demand factor envisions a base load for this complex, which is _____ kw, and allows excursions beyond the base period not to exceed zero minutes per excursion. If this excursion limit is exceeded, the electric bill is calculated on the basis of this maximum load condition for the billing year (5% grace is allowed).

6.2 Power Factor

The target power factor for all users is 1.0. Two price variations exist, however, based on an acceptable power factor of 0.8. These are respectively, an incentive, and a penalty, as well as a shutdown clause.

6.2.1 Power Factor Incentive:

An incentive of a discount on the electric bill is offered, at a rate of 0.5% discount (factor 0.005) on each percent of power factor greater than 0.8 (i.e. a maximum of 20 steps at 1% to achieve a P.F. = 1.0).

6.2.2 Power Factor Penalty:

A penalty of an increase on the electric bill is mandated, at a rate of 0.5% increase (factor 0.005) on each percent of power factor less that 0.8 (i.e. a penalty of 10 x 0.5% or 5% for a PF equal to 0.7).

Additionally, if the power factor is 0.6 or less, a second 0.5% increase per 1% of P.F. is additive, for a total penalty of 1% of P.F. below 0.6.

6.2.3 Shutdown for Power Factor:

The billing system provides a clause to shutdown any user who has a power factor of less than 0.6, who does not correct this adverse power factor within 3 months.

6.3 Billing Rates:

The following rates are based upon a yearly billing basis, and normally apply to a fiscal year from July to June.

The bill is based upon the sum of several elements, which consist of three major categories, thereafter ratioed up or down by the power factor rate adjustment.

The three major elements are:

a) constant annual charge, based on the maximum stated demand, and priced at 7.756 LE/year for each kw.

b) a cost per KWH consumed, on a sliding scale, in accord with table #1.

c) taxes, which are the sum of:

- broadcast tax, @ 0.001 LE per KWH for lighting[1].
- consumption tax, @ 0.005 LE per KWH for lighting[1].
- power tax, @ 0.0001 LE per KWH for 90% of KWH.

See Table #1 on next page.

[1] assumed to be 10% of total.

KWH Rate Table #1

Range	1 Time	2 Maximum Rate	3 Total Power (measured)	4 Total Power (calculated)	5 Power Remaining	6 Rate	7 Cost
	(hours)	(KW)	(KWH)/year	(KWH)	(KWH)	(LE)	(LE)
1	1000					0.0312	
2	500					0.0294	
3	1000					0.0256	
4	1000					0.0220	
5	1500					0.0167	
6	note 7					0.0143	

Notes :

1. column 1 represents hours at the stated demand rate, i.e. first 1000 hours, next 500 horus, etc. Range 6 does not have an entry, since the power at range 6 is found by difference.

2. column 2 is the maximum rate, as determines from short term maximum during the year (not applicable to range 6)

3. column 3 is measured power at the meter, in KWH, for the billing year (enter at range 1 position only).

4. column 4 is total power calculated, as the product of columns 1 & 2.

5. column 5 is remaining power, as column 3 - column 4 for range 1, and thereafter the entry for the previous range minus the entry for the previous range minus the entry in column 4 for the current range, i.e. power in KWH not yet accounted for.

6. column 7 is the product of columns 4 & 6, until such time as the power remaining is less that the power calculated. When this occurs, colunm 7 is the product of the power remaining (column 5) and column 6. Note that this occurs always at range 6, if not before.

7. Maximum hours which could exist in column 1 is: 365 x 24 - 5,000 = 3,760 hours.

PORTABLE INSTRUMENT LIST

Item	Qty	Instrument Type and Manufacturer	Model No.	Serial No.	Brief Description
1.	1ea	Digital Thermometer * Thermoelectric	Micromite 3115300000	48614-1-1	T/C Thermometer w/ Accessories
2.	1ea	Dial Thermometer (0/220 F)	None	None	Temperature Indicator
3.	1ea	Dial Thermometer (-40/160 F)	None	None	Ditto
4.	1ea	Mercury Thermometer (0/330 F)	None	None	Ditto
5.	1ea	Infared Thermometer M-C Product (-20/2000 F)	LT-100	011924	Hand Held Digital Thermometer
6.	1ea	Flue Gas Test Kit**** Bacharach	10-8001	None	Analyze Stack Gases
7.	1ea	Sample Test Cooler Bacharach	11-7046	None	Accessory To Test Kit
8.	1ea	Digital Stack Gas Analyzer-Enerac	50	12122	Same as no. 6
9.	1ea	Anemometer Davis	None	55609B	Propeller driven Air Flow Indicator
10.	1ea	Air Velocity Meter *** Dwyer	400-10	5806	Pitot Tube Manometer
11.	1ea	Sling Psychometer Taylor	1330	None	Measure Relative Humidity
12.	1ea	Ultrasonic Leak Detector-Sonic	3000	801621	Check for Steam Trap Leaks
13.	1ea	Stopwatch Cole-Palmer	R-8672-20	None	Measure Fractions of Seconds
14.	1ea	Tachometer Yokogawa	363200	77GF00288	Measure Shaft Speed (RPM)
15.	1ea	Lightmeter General Electric	214	154	Measure Lighting Levels
16.	1ea	Power Factor Meter Epic Inc.	COS0512	78267	Meter to Indicate Power Factor

Portable Instrument List

Item	Qty	Instrument Type and Manufacturer	Model No.	Serial No.	Brief Descriptio
17.	1ea	KW/KVA Meter Epic Inc.	KW4802	78257	Measures Power in Kilowatts
18.	1ea	Ammeter TIF	1000	5707	Measure electric current in Ampere
19.	1ea	Volt-Ohm Meter Fluke	8021B	4330356	Meter Various Electric Measurements
20.	4ea	Volt/Ammeter Recorder** Rustrack	230	80022AH 80023AH 80024AH 80026AH	Recording Meter to Measure Current/Voltage

* Includes loose thermocouples and accessories

2ea type J, 36" long thermocouples
1ea type K, 4" long thermocouple
1ea type K surface contact thermocouple
1ea armored extension handle
1ea charger, 220vac
2ea extra rechargeable batteries

** Includes extra chart paper(10 rolls amp/10 rolls volt)

*** Includes additional red gauge oil (1 quart bottle and 5ea 3/4oz. bottle

**** Includes following consummables:

36ea tubes of CO detector
3ea bottles Fyrite CO_2 indicator refill (11-0058)
3ea bottles Fyrite CO_2 indicator refill (11-0057)
2ea bottles Fyrite O_2 indicator refill (11-0059)
3ea bottles Fyrite O_2 indicator refill (11-0169)

Section 2

ENERGY CONSERVATION PROGRAM IMPLEMENTATION

TABLE OF CONTENTS

2.0 Introduction 2-1
2.1 Program outline 2-1
2.2 Format and contents 2-4
2.3 Plant Manager Takes First Action
2.3.1 Letter to department heads from plant manager organizing an energy conservation committee and defining its responsibilities 2-5
2.3.2 Bulletin from plant manager to all employees announcing energy conservation program 2-7
2.4 First meeting of energy conservation committee 2-8
2.4.1 Coordinator's letter presented to committee members at first meeting proposing assignments 2-9
2.5 Second meeting of energy conservation committee 2-11
2.5.1 Agenda for second committee meeting 2-12
2.5.2 Letter discussing plans for first energy saving-survey and attached survey report form 2-13
2.5.3 Letter proposing future surveys 2-15
2.5.4 Report on energy equivalents and costs for plant utilities 2-18
2.5.5 Report on present and projected cost of fuel and electric power 2-20
2.5.6 Report on quantities of purchased fuel and electric power used each month in 1973 and 1974 2-21
2.5.7 Letter proposing a system for developing the energy unit ratio, Btu per unit of production, and a tracking chart form 2-23
2.6 First energy saving survey 2-34
2.6.1 Plant manager's letter to department heads endorsing the first energy-saving survey of wastes 2-35
2.6.2 Energy-saving survey team's letter to department heads submitting the timetable for the first survey 2-36
2.6.3 Survey team's report of findings in first survey 2-37
2.6.4 Survey team's letter suggesting supervisor training in energy conservation 2-39
2.7 Third meeting of the energy conservation committee 2-40
2.7.1 Agenda for third committee meeting 2-41
2.7.2 Manager's letter regarding capital project reviews for efficient utilization of energy 2-42
2.7.3 Coordinator's letter submitting forms for list of energy-saving projects and a project evaluation summary form 2-43
2.7.4 Letter about communication of ways to save energy 2-48
2.7.5 Coordinator's letter about a continuing program with attachments showing planned activities for each month for the rest of the year. 2-50
2.8 Conclusion 2-53
2.8.1 Manager's letter demonstrating his continuing concern about energy conservation and requesting a contingency plan 2-54
2.8.2 Report on contingency plan status 2-56

2. ENERGY CONSERVATION PROGRAM IMPLEMENTATION

2.0 INTRODUCTION

This section of the kit describes the initiation and implementation of an energy conservation program. Section 2.1 is an outline of the elements of a program. It may be used as a guide to design your own program, tailored to your company's requirements and capabilities.

For those interested in more detail, the remainder of Section 2, starting with 2.2, illustrates the important steps in the program by a series of memoranda based on the internal correspondence generated in several actual energy conservation programs. Many of these communications could be accomplished verbally at staff meetings and committee meetings and then be documented in minutes. All of your needs may not be anticipated and some of the actions illustrated may not be necessary or appropriate for your management structure but you will find illustrated in this section most of the necessary communications. Suggested methods and forms for recording and reporting plant survey data and for tracking the progress of the program are included.

The memoranda are based on a hypothetical company, the ECONERGY Company, which has two production departments, a utilities department, a maintenance department, and an administrative services department responsible for the purchasing, accounting, shipping, and receiving functions.

The formal organization chart for the ECONERGY Company is shown below for reference. The names shown beneath the department blocks are the names of members of the Energy Conservation Committee.

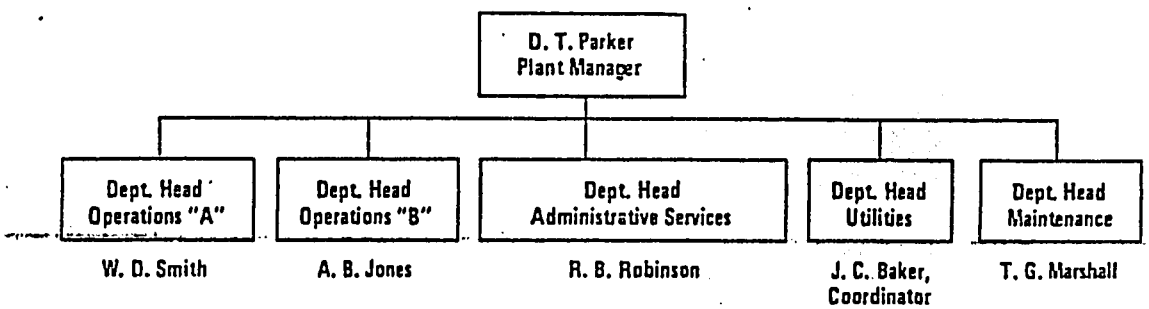

2.1 PROGRAM OUTLINE

	Reference Section
I. TOP MANAGEMENT COMMITMENT	
A. Inform line supervisors of:	2.3.1
1. The economic reasons for the need to conserve energy	
2. Their responsibility for implementing energy saving actions in the areas of their accountability	
B. Establish a committee having the responsibility for formulating and conducting an energy conservation program and consisting of:	2.3.1
1. Representatives from each department in the plant	
2. A coordinator appointed by and reporting to management	
Note: In smaller organizations, the manager and his staff may conduct energy conservation activities as part of their management duties.	
C. Provide the committee with guidelines as to what is expected of them:	2.3.1
1. Plan and participate in energy saving surveys	
2. Develop uniform record keeping, reporting, and energy accounting	

168

	Reference Section
3. Research and develop ideas on ways to save energy	
4. Communicate these ideas and suggestions	
5. Suggest tough, but achievable, goals for energy saving	
6. Develop ideas and plans for enlisting employee support and participation	
7. Plan and conduct a continuing program of activities to stimulate interest in energy conservation efforts	
D. Set goals in energy saving:	
1. A preliminary goal at the start of the program	
2. Later, a revised goal based on savings potential estimated from results of surveys	
E. Employ external assistance in surveying the plant and making recommendations, if necessary	6.2
F. Communicate periodically to employees regarding management's emphasis on energy conservation action and report on progress	2.8.1, 2.3.2
II. SURVEY ENERGY USES AND LOSSES	
A. Conduct first survey aimed at identifying energy wastes that can be corrected by maintenance or operations actions, for example:	2.5.2, 2.6.1, 2.6.2, 2.6.3
1. Leaks of steam and other utilities	
2. Furnace burners out of adjustment	
3. Repair or addition of insulation required	
4 Equipment running when not needed	
B. Survey to determine where additional instruments for measurement of energy flow are needed and whether there is economic justification for the cost of their installation	2.5.3
C. Develop an energy balance on each process to define in detail:	2.5.3
1. Energy input as raw materials and utilities	
2. Energy consumed in waste disposal	
3. Energy credit for by-products	
4. Net energy charged to the main product	
5. Energy dissipated or wasted	
Note: Energy equivalents will need to be developed for all raw materials, fuels, and utilities, such as electric power, steam, etc., in order that all energy can be expressed on the common basis of Btu units.	2.5.4
D. Analyze all process energy balances in depth:	2.5.3
1. Can waste heat be recovered to generate steam or to heat water or a raw material?	
2. Can a process step be eliminated or modified in some way to reduce energy use?	
3. Can an alternate raw material with lower energy content be used?	
4. Is there a way to improve yield?	
5. Is there justification for:	
a. Replacing old equipment with new equipment requiring less energy?	
b. Replacing an obsolete, inefficient process plant with a whole new and different process using less energy?	
E. Conduct weekend and night surveys periodically	2.7.[illegible] 2.5.[illegible]
F. Plan surveys on specific systems and equipment, such as:	2.5.[illegible]
1. Steam system	
2. Compressed air system	
3. Electric motors	
4. Natural gas lines	
5. Heating and air conditioning system	
III. IMPLEMENT ENERGY CONSERVATION ACTIONS	
A. Correct energy wastes identified in the first survey by taking the necessary maintenance or operation actions	2.6.[illegible]
B. List all energy conservation projects evolving from energy balance analyses, surveys, etc. Evaluate and select projects for implementation:	

169

	Reference Section
1. Calculate annual energy savings for each project	
2. Project future energy costs and calculate annual dollar savings	
3. Estimate project capital or expense cost	
4. Evaluate investment merit of projects using measures, such as return on investment, etc.	
5. Assign priorities to projects based on investment merit	
6. Select conservation projects for implementation and request capital authorization	
7. Implement authorized projects	
C. Review design of all capital projects, such as new plants, expansions, buildings, etc., to assure that efficient utilization of energy is incorporated in the design.	2.7.2
Note: Include consideration of energy availability in new equipment and plant decisions.	
IV. DEVELOP CONTINUING ENERGY CONSERVATION EFFORTS	
A. Measure results:	2.5.7
1. Chart energy use per unit of production by department	2.5.6
2. Chart energy use per unit of production for the whole plant	
Note: The procedure for calculating energy consumption per unit of product is presented in "How to Profit by Conserving Energy"	2.5.7
3. Monitor and analyze charts of Btu per unit of product, taking into consideration effects of complicating variables, such as outdoor ambient air temperature, level of production rate, product mix, etc.	
a. Compare Btu/product unit with past performance and theoretical Btu/ product unit	
b. Observe the impact of energy saving actions and project implementation on decreasing the Btu/unit of product	
c. Investigate, identify, and correct the cause for increases that may occur in Btu unit of product, if feasible	
B. Continue energy conservation committee activities	2.7.5
1. Hold periodic meetings	
2. Each committee member is the communication link between the committee and the department supervisors represented	
3. Periodically update energy saving project lists	
4. Plan and participate in energy saving surveys	
5. Communicate energy conservation techniques	
6. Plan and conduct a continuing program of activities and communication to keep up interest in energy conservation	
7. Develop cooperation with community organizations in promoting energy conservation	
C. Involve employees	2.7.5
1. Service on energy conservation committee	2.7.4 2.6.4
2. Energy conservation training course	
3. Handbook on energy conservation	
4. Suggestion awards plan	
5. Recognition for energy saving achievements	
6. Technical talks on lighting, insulation, steam traps, and other subjects	
7. "savEnergy" posters, decals, stickers	
8. Publicity in plant news, bulletins	
9. Publicity in public news media	
10. Letters on conservation to homes	
11. Talks to local organizations	
D. Evaluate program	
1. Review progress in energy saving	
2. Evaluate original goals	
3. Consider program modifications	
4. Revise goals, as necessary	

170

2.2 FORMAT AND CONTENTS

Throughout this section, the letters, reports, forms, and meeting agendas are in time sequence. Where appropriate, there are comments or explanations which relate to the following memoranda.

Energy costs and cost projections, quantities of energy, and equivalent energy factors for utilities have been left as blanks, rather than stated numerically, in order to avoid any implication that the figures are typical. Such numbers will vary from industry to industry, plant to plant, and region to region. Each plant must make its own determination of these figures.

Names of individuals and of the company are, of course, fictitious.

Please note the definitions of the following symbols used in this section:

k = thousand or kilo
M = million or mega

2.3 PLANT MANAGER TAKES FIRST ACTION

The plant manager has decided that energy conservation must become a specific part of the company management program. He takes action by appointing an energy conservation coordinator and requesting the head of each department to select someone to work with the coordinator. His actions are expressed in the following memoranda.

2.3.1

ECONERGY COMPANY **INTER-OFFICE CORRESPONDENCE**

Date: January 7, 1974

To: Department Heads

From: D. T. Parker, Plant Manager

Subject: Formation of Energy Conservation Committee

The rising costs of energy and the allocations brought about by shortages have become a problem of increasing concern. The need for energy conservation has been discussed in previous staff meetings, but frankly we are not getting the results we want.

Many companies achieved 5 to 10% savings in energy usage last year by implementing formal energy conservation programs. Our plant uses _____ million Btu of energy yearly and our annual bill for purchased fuel and electric power is about $_____ at current energy prices. If we could achieve, for example, a 10% cut in our annual consumption, that would be a saving of $_____ -- an appreciable amount of money. Consider also that energy costs are rising at a rate of about _____% per year.

We must initiate an aggressive energy conservation program at once. We need to establish a committee with the responsibility for formulating and conducting the program. I am appointing J. C. Baker to the fulltime responsibility as committee coordinator, reporting directly to me, and I am asking that by one week from today each of you assign someone to represent your department on the committee. That person should be knowledgeable and influential. He will be the communication link between the committee and the key supervisors in your areas. Appointment to this committee will be considered a major assignment requiring a significant amount of time, particularly during the early stages of the energy conservation program.

savEnergy

172

We expect the committee to research and come up with ideas, to establish an energy conservation goal, to communicate suggestions on ways of achieving that goal, to develop a common economic base to work from, and to do some record keeping. The committee will need to compile lists of energy conservation projects, their costs and benefits so that we can plan our expenditures. It will be the line supervisors, however, who must see to it that actions are taken to accomplish energy conservation.

I suggest that a good way to kick off the program would be to conduct surveys throughout our plant - tracing out the energy streams to identify where our energy is used so that wasted energy can be reduced or eliminated. Fixing leaks of steam and other utilities, adjusting furnace burners, repairing steam traps, and repairing or adding insulation are some of the maintenance and operating actions we can take immediately to start realizing energy savings. The Energy Conservation Program Guide for Industry and Commerce (EPIC) published by the U. S. Department of Commerce will provide the guidance for developing our program.

I am thoroughly convinced that the continuing success of our company requires that we use our energy supplies as effectively as possible. The success of our program will depend upon the support and interest that we, as management, demonstrate.

I think we should set a tough, achievable goal for ourselves. Let's set an initial target of 10% savings in energy this year. This goal can be revised after we conduct our surveys and estimate the actual potential savings.

232

ECONERGY COMPANY

EMPLOYEE BULLETIN

Date: January 15, 1974

To: All Employees

From: D. T. Parker, Plant Manager

Subject: Initiation of Energy Conservation Program

Television, radio and newspapers are filled with reports on the energy shortages. This problem has implications far beyond the inconvenience we experience at our local gasoline service stations. This energy problem has a potentially serious impact on American industry, including the ECONERGY Company.

Not only are the costs of purchasing electricity and fuels soaring but the availability of our vital raw materials is declining as a result of the energy shortages. To avoid production disruptions which may result from these shortages, the ECONERGY Company is initiating a far-reaching Energy Conservation Program (ECP) to identify and eliminate inefficient, unnecessary, or wasteful uses of energy throughout the plant.

To accomplish this task I have appointed Mr. J. C. Baker, Utilities Department, to head the Energy Conservation Committee. This Committee will formulate a program which will enable us to reduce our energy consumption without disruption to our production flow. The support and active participation of every employee is essential if we are to achieve our goal of 10% savings in energy use this year.

You will soon be seeing signs that say "savEnergy." This is more than a catchy slogan: it is a reminder that energy will always be available at home and at work if we are careful in the ways we use it.

savEnergy

174

2.4 FIRST MEETING OF ENERGY CONSERVATION COMMITTEE

As soon as the committee coordinator learns of his new assignment, he starts planning how the committee can go about accomplishing the tasks set forth in the plant manager's letter (2.3.1). When he has the names of all members of the committee and a plan in mind, he calls a meeting of the committee and submits to them the proposed plan in the following letter.

For simplification, we are assuming that the plan and assignments were accepted by the committee and no additional topics were discussed. However, if the committee agreed on some changes to the plan and/or talked about other matters, minutes of the meeting would be written and copies given to committee members.

ECONERGY COMPANY

INTER-OFFICE CORRESPONDENCE

Date: January 18, 1974

To: W. D. Smith, Operations "A"
A. B. Jones, Operations "B"
T. G. Marshall, Maintenance
R. B. Robinson, Administrative Services

From: J. C. Baker
Energy Conservation Coordinator

Subject: Committee Assignments

D. T. Parker's letter dated January 7, 1974 outlines the formation of the Energy Conservation Committee, to which we have been appointed, and indicates some of the actions we are to undertake. As he suggests, each of us should become thoroughly familiar with the program suggestions and energy conservation opportunities described in EPIC.

We must get started on several of the tasks immediately, so I have developed a plan for dividing these duties among us. The first priorit i. to conduct a survey of present energy usage and to begin reducing or eliminating waste. Because of their familiarity with these problems, our operations representatives, W. D. Smith and A. B. Jones, should be responsible for developing a plant-wide plan for energy saving surveys.

Another area that requires early attention is the establishment of a common economic base from which to work. There will be energy saving projects that will involve dollar expenditures which require financial justification. We need a uniform method of calculating the value of savings for our various forms of energy - electric power, fuel, steam, and compressed air. As Utilities representative, I will undertake this task.

I would appreciate it if R. B. Robinson of Administrative Services could obtain from Accounting data on the quantities of purchased fuel and electric power used monthly last year and this year. A continuing plot of energy consumption per unit of production is necessary to help us monitor the progress in our plant-wide energy conservation effort.

savEnergy

In addition, we need to consider projected energy costs. So, would R. B. Robinson also please ask the Purchasing Section if they can develop fuel and electric power cost projections for this year, three years and five years into the future.

We are going to need to communicate ideas and suggestions on energy conservation techniques applicable to our plant. Since T. G. Marshall of Maintenance has had broad experience throughout the plant, I am asking that he assume responsibility for coordinating this function. To start with, we have several literature references and the Energy Conservation Opportunities (ECO's) in EPIC. As time goes along, we surely will have generated additional ideas deserving of broad communications through our committee.

If all of you are in agreement with this plan, I suggest that each of us meet with the key supervisors in our areas this week to inform them of our program plans and to ask them to come up with energy saving projects.

Let us meet again in my office one week from today, at the same time, to report our progress. If you are unable to attend that meeting or any future meeting, please ask an alternate to attend in your place.

cc: D. T. Parker
Plant Manager

savEnergy

2.5 SECOND MEETING OF ENERGY CONSERVATION COMMITTEE

The week passes and the committee holds its second meeting. The coordinator gives each member a copy of the agenda shown on the next page. Then, in the sequence of the agenda, each member presents his report, giving a copy of his letter and attachments to all present. The following six letters document the reports and proposals submitted at the meeting. It is assumed that all these matters were accepted or approved by the committee.

Note that in Section 2.5.4, and elsewhere in EPIC, a ratio of 10,000 Btu/kWh is used for illustrative purposes for the energy used by a utility to generate electricity. According to the Federal Power Commission, the national average for 1972 was approximately 12,000 Btu/kWh. This figure will vary from region to region, however.

2.5.1

ECONERGY COMPANY

INTER-OFFICE CORRESPONDENCE

Date: January 25, 1974

To: Energy Conservation Committee

From: J. C. Baker, Coordinator

Subject: Agenda for Second Meeting of the Energy Conservation Committee

1. Report of plans for energy saving surveys
2. Energy equivalents for plant utilities
3. Present and projected future costs of energy
4. Monthly energy use for 1973 and 1974
5. Proposed forms:
   a. Calculation of Btu per unit of production
   b. Tracking chart

cc: D. T. Parker
Plant Manager

1.5.2

ECONERGY COMPANY

INTER-OFFICE CORRESPONDENCE

Date: January 25, 1974

To: J. C. Baker, Energy Conservation Coordinator
T. G. Marshall, Maintenance
R. B. Robinson, Administrative Services

From: Energy Saving Survey Team
W. D. Smith, Operations "A"
A. B. Jones, Operations "B"

Subject: Plans for First Energy Saving Survey

The first survey will be aimed at identifying energy wastes that can be corrected by maintenance or operations actions. The attached survey form indicates the types of wastes we will be looking for. In addition, we will refer to the Energy Conservation Checklist in EPIC. All process areas and buildings will be included in the survey. The main part of the survey will be conducted during normal daytime work hours, but one or more night visits will be required to search for excess nighttime lighting and HVAC (heating, ventilating, and air conditioning), as well as equipment running when not needed. Areas or buildings that are in a full or partial shutdown condition on weekends will warrant weekend visits to look for energy use that is not necessary.

The survey team proposes to conduct the survey of each area in cooperation with and accompanied by a foreman, supervisor, or engineer designated by the department head. Findings of the survey of each area will be recorded on the attached form and copies will be made available to the department head, the maintenance department, and the Energy Conservation Committee.

Work orders for correction of energy wastes will be prepared by department supervisors, as is the case for any other maintenance work.

This week, the survey team will prepare a timetable for visits to the various areas and communicate the schedule to department heads.

By copy of this letter to Mr. Parker we are requesting management endorsement of our plans for this first energy survey.

cc: D. T. Parker, Plant Manager

savEnergy
2-13

180

ENERGY SAVING SURVEY

Surveyed by: _____

Department: _____

Date: _____

Fuel Gas or Oil Leaks	Steam Leaks	Compressed Air Leaks	Condensate Leaks	Water Leaks	Damaged or Lacking Insulation	Excess Lighting	Excess Utility Usage	Equipment Running & Not Needed	Burners Out of Adjustment	Leaks of or Excess of HVAC	Location	Date Corrected

ECONERGY COMPANY

INTER-OFFICE CORRESPONDENCE

Date: January 25, 1974

To: J. C. Baker, Energy Conservation Coordinator
T. G. Marshall, Maintenance
R. B. Robinson, Administrative Services

From: Energy Saving Survey Team
W. D. Smith, Operations "A"
A. B. Jones, Operations "B"

Subject: Future Energy Savings Surveys

After our first energy saving survey, which is aimed at correction of the more obvious energy losses, there are other surveys which we feel certain will reveal additional ways to reduce energy consumption but which probably will require capital investment.

1. The Energy Balance

The basic data needed for energy conservation efforts is an energy balance on each process and department. This study can be done by an engineer in the department concerned, who is thoroughly familiar with the process flow sheet or the building energy uses. The object is to define in detail the energy input, energy utilized, and energy dissipated or wasted. In some areas this will require improving measuring capability. The cost of this additional measuring capability must be weighed against the potential savings. An example is shown on the following energy flow diagram for a steam generating unit. Having identified the individual energy wastes, the engineer can then determine methods for reducing or using these energy wastes. (The ECO Checklist in EPIC can be helpful.) The engineer's next task is to evaluate the alternate methods and recommend the best one.

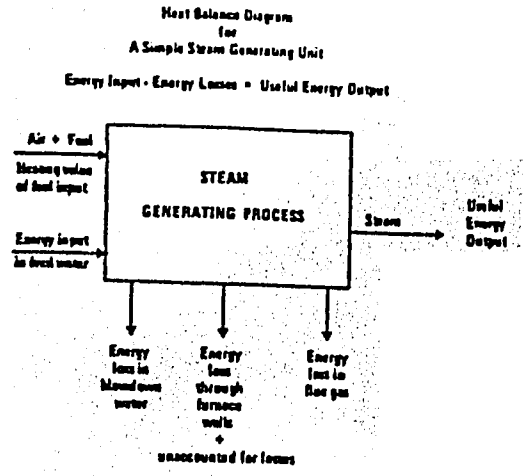

2. Energy Surplus Survey

After the energy balances have been completed, some coordination by the survey team is indicated. The survey team can contact the engineers who have prepared the energy balances to determine if there are energy wastes that could be recovered economically but have no use within their process area. Let's say that there is potential for recovering waste heat from furnace flue gases by using it to (a) preheat combustion air or (b) generate low pressure steam. Suppose that air preheat is impractical because of furnace construction and there is no use for low pressure steam within that department. The survey team can communicate through the energy conservation committee to other departments and perhaps find a use for the low pressure steam.

3. Survey of Pressure Reducing Stations

Determine location of all steam and high pressure gas, pressure-reducing valves, upstream and downstream pressures, and flow rates. Evaluate feasibility of letting pressure down by flowing through an expander driving some equipment, such as a pump or compressor.

4. Survey of Compressed Air Pressure Requirements

Survey all users of plant air to find minimum pressure levels required. Lowering compressor discharge pressure saves energy. If all but one or two users can be satisfied with a lower pressure, an evaluation of the feasibility of installing a separate compressor or a booster to supply these higher pressure users should be made.

5. Steam System Survey

a. Traps

Review all steam trap installations. Are there too many traps on a line? Or too few? Of an efficient type? Or inefficient? Are traps sized properly? Installed properly? Are they functioning as they should? Should traps receive special maintenance attention?

b. Increase Condensate Return to Boilers

Loss of condensate is a waste of heat and of valuable high purity water. Identify all sources of condensate and evaluate economic feasibility of installing pump and insulated piping to return condensate to boiler feedwater tank. If condensate is contaminated, evaluate possible clean-up.

c. Use of Lower Pressure Steam

Search for situations where use of high pressure steam can be switched over feasibly to lower pressure steam. It is advantageous to use the lower pressure steam where the higher pressure is not needed. This is particularly true when the lower pressure steam is being supplied from extraction or back-pressure turbines or a low pressure boiler separate from the high pressure boiler. Of course, lowering pressure by a pressure reducing valve offers no savings in energy.

6. Survey for Oversized Electric Motors and Equipment

Electric motors and equipment, such as centrifugal pumps, operate with best efficiency at rated load. If they are operating at reduced load, efficiency suffers. Take ampere readings on motors and compare to rating. Evaluate replacement of oversized motors and equipment with proper sizes.

7. Insulation

Inspect insulation and furnace walls with infrared scanners to detect excessive heat losses. Repair insulation and walls where needed.

8. Combustion Survey

Determine combustion efficiency in all furnaces. Evaluate economic feasibility of replacing burners with more efficient type and installing oxygen and combustibles analyzers on flue gas along with improved combustion control system to maintain optimum excess air.

cc: D. T. Parker
Plant Manager

savEnergy

ECONERGY COMPANY

INTER-OFFICE CORRESPONDE

Date: January 25, 1974

To: W. D. Smith, Operations "A"
A. B. Jones, Operations "B"
T. G. Marshall, Maintenance
R. B. Robinson, Administrative Services

From: J. C. Baker, Energy Conservation Coordinator

Subject: Energy Equivalents and Costs for Plant Utilities

We need a uniform method for calculating the value of our energy savin for our various utilities and I recommend we institute an accounting system based on Btu usage. For our purchased electric power, dollar accounting is simply a matter of using the $/kWh rate(s) we pay the utility company. The matter is more involved, however, for our Btu accounting of electric power. One kWh is capable of producing 3412 Bt of heat. But due to power plant inefficiency, approximately 10,000 Bt of fuel are burned by the utility company to generate one kWh. Therefore, the "energy equivalent" for electric power is:

10,000 Btu/kWh

Following this example then, an "energy equivalent" may be defined as the number of Btu of fuel that are consumed in generating a unit of utility, such as a kWh of electricity or 1000 lb of steam. Defined this way, the "energy equivalent" is the factor we can use across the board to put all projects on a common base in our energy conservation program.

Next let us consider the fuels that we purchase. The energy equivalent is the heat of combustion. The unit cost comes from accounting.

Fuel	Cost	Energy Equivalent	Cost/MBtu
Natural Gas	$_____/1000 cu ft	_____Btu/cu ft	$_____/MBt
Fuel Oil	$_____/gal	_____Btu/gal	$_____/MBt
Coal	$_____/ton	_____Btu/lb	$_____/MBt

185

The costs of our generated steam, compressed air, water and treated boiler make-up water published by our accounting department include depreciation, maintenance and operating costs, etc., and therefore cannot be used in figuring dollar value of energy saving. When we save these utilities we save only the fuel or electric power that was used to generate, compress or pump the utilities. In our boilers generating 400 psig and 150 psig steam, the energy equivalents of steam are the fuel Btu used in generating steam based on the boiler efficiencies. The steam costs to be used in energy saving accounting are, therefore, the costs of the energy equivalents.

Steam	Cost	Energy Equivalent
400 psig	$_____/1000 lb	_____Btu/1000 lb
150 psig	$_____/1000 lb	_____Btu/1000 lb

With regard to compressed air, water and treated boiler make-up water, the costs are for electric power used for compressing or pumping. The energy equivalents take into account 10,000 Btu/kWh.

Utility	Cost	Energy Equivalent
Compressed Air	$_____/1000 cu ft	_____Btu/1000 cu ft
Water	$_____/1000 lb	_____Btu/1000 lb
Boiler Make-Up Water	$_____/1000 lb	_____Btu/1000 lb

When we save condensate and return it to the boilers, we reduce the boiler make-up water requirement and save the Btu difference between the heat content of the condensate at _____F and of fresh water at its temperature. Thus, our energy equivalent for condensate is _____Btu/1000 lb and its cost is $_____/1000 lb.

cc: D. T. Parker
Plant Manager

savEnergy

190

2.5.5

ECONERGY COMPANY

INTER-OFFICE CORRESPONDENCE

Date: January 25, 1974

To: J. C. Baker, Energy Conservation Coordinator
W. D. Smith, Operations "A"
A. B. Jones, Operations "B"
T. G. Marshall, Maintenance

From: R. B. Robinson, Administrative Services

Subject: Fuel and Power Cost Projections

The Purchasing Section has provided the following information:

	Cost at Present	Estimated Cost 3 Years	Estimated Cost 5 Years
Electric Power	$____/kWh	$____/kWh	$____kWh
Natural Gas	$____/1000 cu ft	$____/1000 cu ft	$____1000 cu ft
Fuel Oil	$____/gal	$____/gal	$____/gal
Coal	$____/ton	$____/ton	$____/ton

Purchasing has agreed to advise our committee whenever these costs are revised.

cc: D. T. Parker, Plant Manager

137

2.5.6

ECONERGY COMPANY

INTER-OFFICE CORRESPONDEN

Date: January 25, 1974

To: J. C. Baker, Energy Conservation Coordinator
W. D. Smith, Operations "A"
A. B. Jones, Operations "B"
T. G. Marshall, Maintenance

From: R. B. Robinson, Administrative Services

Subject: Monthly Use of Fuels and Power - 1973 and 1974

The attached form was developed and submitted to Accounting. They hope to have the information compiled within a few days.

cc: D. T. Parker, Plant Manager

savEnergy

188

MONTHLY PLANT ENERGY USE

1973	ELECTRIC POWER			NATURAL GAS			FUEL OIL			COAL			TOTAL Btu	Number of Units Produced	Btu Per Unit of Production
	kWh	Btu/kWh	Btu	k cu ft	Btu/k cu ft	Btu	gal	Btu/gal	Btu	TONS	Btu/lb	Btu			
Jan.															
Feb.															
Mar.															
Apr.															
May															
June															
July															
Aug.															
Sep.															
Oct.															
Nov.															
Dec.															
1974															
Jan.															
Feb.															
Mar.															
Apr.															
May															
June															
July															
Aug.															
Sep.															
Oct.															
Nov.															
Dec.															

ECONERGY COMPANY

INTER-OFFICE CORRESPONDENCE

Date: January 25, 1974

To: W. D. Smith Operations "A"
A. B. Jones, Operations "B"
T. G. Marshall, Maintenance
R. B. Robinson, Administrative Services

From: J. C. Baker, Energy Conservation Coordinator

Subject: Department Energy Unit Ratio and Tracking Chart

Attachment A is a copy of the do-it-yourself kit "How to Profit by Conserving Energy" by the Sub-Council on Technology of the National Industrial Energy Conservation Council. The form in the kit details a suggested procedure for calculating the energy content (Btu) of a product.

In our particular operations, we have no by-products, and our energy use for waste disposal is negligible. Therefore, our prime concern is raw material energy and conversion energy. Conversion energy is the energy equivalent of utilities used in manufacturing the product. Raw material energy content can be somewhat more involved. The raw material suppliers may be able to provide this number, or an approximation is available for most materials from the U. S. Department of Commerce. If unavailable from these sources, it can be estimated as the heat of combustion of the material. This estimate is always low. Any energy spent on the raw material in getting it to the point of use should be considered - for example, mining, crushing and sizing, and transportation. Bear in mind that less energy intensive raw materials should escalate less in price as energy costs increase. Having determined the energy content of raw materials, and given a choice, a better raw material selection should be possible.

Attachment B is a three page form for tabulating monthly department use of raw materials and utilities, for calculating Btu content of these quantities, and for determining the total Btu and the energy/production unit ratio in Btu per unit of production. As this information is developed we will probably find that there is a need to install additional metering and to rehabilitate some existing meters, if economically justified.

savEnergy

190

ttachment C is a graph for plotting the monthly Btu per unit of roduction for 1973 and 1974. This graph can be used for charting he energy used by individual production departments and also by the otal plant.

f you have any questions, see me. These records are important o our on-going program.

:: D. T. Parker, Plant Manager

avEnergy

ATTACHMENT A

HOW TO PROFIT BY CONSERVING ENERGY

A Do-It-Yourself Kit

SUB-COUNCIL ON TECHNOLOGY OF THE NATIONAL INDUSTRIAL ENERGY CONSERVATION COUNCIL

OBJECTIVE Encourage industrial firms to set measurable goals for reducing energy consumption per unit of product produced.

GOAL. X-percent reduction in energy content* expressed in BTU'S per unit of product.

PROCEDURE Use the energy calculator on page two to determine the current energy content in BTU'S per unit for any kind of manufactured or processed product.

With this yardstick, measure progress to determine if energy reduction goals are being met, exceeded or missed.

*Energy content per unit of product includes energy content o the raw material plus energy spent in converting or upgrading an in waste disposal.

"DO IT YOURSELF KIT" For Calculating The Energy Content of A Product

GUIDELINES OF THE NATIONAL INDUSTRIAL ENERGY CONSERVATION COUNCIL
SUGGESTED PROCEDURE FOR CALCULATING ENERGY CONTENT (BTU'S) OF A PRODUCT

FOR THE PERIOD BEGINNING January 1, 1974, PERIOD ENDING February 1, 1974.

COMPANY: The Dow Chemical Co.
RESPONSIBLE MANAGER: I. G. Snyder, Jr.
1 PRODUCT
2 PRODUCT I.D. NO.

RAW MATERIAL ENERGY (LIST MAJOR RAW MATERIALS)

3 TOTAL UNITS PRODUCED

UNITS OF PRODUCTION (LB, GAL, PIECE, ETC.)

4 RAW MATERIAL	5 TOTAL UNITS	X 6 BTU'S UNIT	= 7 TOTAL BTU'S
A:			
B:			
C:			
D:			
E:			

TOTAL BTU'S 8

CONVERSION ENERGY (LIST ALL MAJOR UTILITIES)

9 UTILITY	10 TOTAL UNITS	X 11 BTU'S UNIT	= 12 TOTAL BTU'S
A:			
B:			
C:			
D:			
E:			

TOTAL BTU'S 13

WASTE DISPOSAL ENERGY

14 WASTE	15 TOTAL DISPOSAL BTU'S	17 TOTAL WASTED UNITS
A:		
B:		
C:		
D:		
E:		

TOTAL BTU'S 16

GROSS ENERGY CONTENT OF PRODUCT (SUM OF ITEMS 8, 13 AND 16) BTU'S 18

BY-PRODUCT ENERGY CREDIT (LIST ALL MAJOR BY-PRODUCTS)

19 BY-PRODUCT	20 TOTAL UNITS	X 21 BTU'S UNIT	= 22 TOTAL BTU'S
A:			
B:			
C:			
D:			
E:			

TOTAL BTU'S 23

NET ENERGY CONTENT OF PRODUCT (ITEM 18 LESS ITEM 23) 24 BTU'S

ENERGY CONTENT PER UNIT OF PRODUCTION (ITEM 24 DIVIDED BY ITEM 3) 25 BTU'S UNIT

GOAL (TARGETED ENERGY CONTENT FOR THIS PERIOD) BTU'S UNIT 26

IF ITEM 26 IS EQUAL TO ITEM 25, GOAL WAS MADE (CHECK ITEM 27) 27 MADE GOAL

IF ITEM 26 IS NOT EQUAL TO ITEM 25, COMPUTE DEVIATION FROM GOAL:

ITEM 26 LESS ITEM 25 28

ITEM 28 DIVIDED BY ITEM 26 29

MULTIPLY ITEM 29 BY 100 30

IF ITEM 26 IS GREATER THAN ITEM 25, COPY ITEM 30 HERE 31+ % BEAT GOAL

IF ITEM 26 IS LESS THAN ITEM 25, COPY ITEM 30 HERE 32− % MISSED GOAL

GUIDE FOR FILLING OUT FORM ON OPPOSITE PAGE

1 Finished product ready for shipment.

2 Product I.D. No. is the numerical identification of the product.

3 Units of the product (item 1) made during this time period.

4 The material that goes into producing and packaging the product (includes fuels used as raw material).

5 Units of the raw material (item 4) that were used during this time period.

6 Every material has a specific energy content. Energy content is measured in terms of BTU'S. Raw material supplier may provide this number or an approximation is available for most materials from the U. S. Department of Commerce. If unavailable from these sources, it can be estimated as the heat of combustion of the material. This estimate is always low.

7 (Item 5) multiplied by (item 6).

9 Utilities include primarily electricity, fuel oil and natural gas.

10 Units of utility (item 9) used during this time period.

11 For fuel, this is the heat of combustion of the fuel. This number is available from supplier. For other utilities, this is the energy necessary to generate one unit of the utility (e.g., 1 KWH). Use 10,000 BTU'S per KWH unless your supplier has a better number.

12 (Item 10) multiplied by (item 11).

14 Waste is that material which has no economic value and which requires additional BTU'S to dispose of.

15 Estimated energy to dispose of the waste (item 14). This may be the energy to truck away and bury a solid, the energy to burn some scrap or the energy to run a waste disposal plant.

17 Units of waste produced during this time period. Units of waste is not needed for the calculation, but may be recorded for later reference.

19 By-products are those saleable materials which are made incidental to the production of the desired product or products.

20 Units of by-product (item 19) made during this time period.

21 The usable energy in the by-product. As an approximation, use the ratio of the value of the by-product to the value of the product multiplied by the gross energy content of the product (item 18).

22 (Item 20) multiplied by (item 21).

"DO IT YOURSELF KIT" For Calculating The Energy Content of A Product

GUIDELINES OF THE NATIONAL INDUSTRIAL ENERGY CONSERVATION COUNCIL
SUGGESTED PROCEDURE FOR CALCULATING ENERGY CONTENT (BTU'S) OF A PRODUCT

FOR THE PERIOD BEGINNING January 1, 1974 PERIOD ENDING February 1, 1974

COMPANY: The Dow Chemical Co. RESPONSIBLE MANAGER: I. G. Snyder, Jr.

1 PRODUCT: Ethylene 2 PRODUCT I.D. NO.: 007-23-1

RAW MATERIAL ENERGY (LIST MAJOR RAW MATERIALS)

4 RAW MATERIAL	5 TOTAL UNITS	x 6 BTU'S UNIT	= 7 TOTAL BTU'S
A: Ethane	57.29×10^6	22,304/lb	1166.3×10^9
B: Caustic Soda	$.252 \times 10^6$	12,500/lb	3.2×10^9
C: Hydrogenation Cat.	8.048×10^3	75,000/lb	$.6 \times 10^9$
D: Desiccant	1.117×10^3	50,000/lb	1×10^9
E:			

TOTAL BTU'S 8 1170.1×10^9

3 TOTAL UNITS PRODUCT: 42,000,000

UNITS OF PRODUCTION (LB., GAL., PIECES, ETC.): Pounds

CONVERSION ENERGY (LIST ALL MAJOR UTILITIES)

9 UTILITY	10 TOTAL UNITS	x 11 BTU'S UNIT	= 12 TOTAL BTU'S
A: Steam, 150 psig.	181.31×10^6	1077/lb	195.3×10^9
B: Electricity, KWH	0.71×10^6	10000/KWH	7.1×10^9
C: Natural Gas, ft.^{3}	263.4×10^6	1030/ft.^{3}	277.5×10^9
D: Cooling Water, gal.	1764×10^6	10/gal.	17.6×10^9
E: Process Water, gal.	1.974×10^6	15/gal.	Negligible

TOTAL BTU'S 13 497.5×10^9

WASTE DISPOSAL ENERGY

14 WASTE	15 TOTAL DISPOSAL BTU'S	17 TOTAL WASTED UNITS
A: Oily, Caustic Water	Disposal Plant 1.8×10^9	Water: 5.92×10^6 gal.
B:	Muriatic Acid 4.1×10^9	Oil in water: 11,200 lbs.
C:		Muriatic Acid to neutralize
D:		Caustic: 639,120 lbs.
E:		

TOTAL BTU'S 16 5.9×10^9

GROSS ENERGY CONTENT OF PRODUCT (SUM OF ITEMS 8, 13 AND 16) BTU'S 18 1673.5×10^9

BY-PRODUCT ENERGY CREDIT (LIST ALL MAJOR BY-PRODUCTS)

19 BY-PRODUCT	20 TOTAL UNITS	x 21 BTU'S UNIT	= 22 TOTAL BTU'S
A: Residue Gas	6.048×10^6	20,000	121.0×10^9
B: Pyrolysis Gas	1.722×10^6	17,986	31.0×10^9
C: C_3-C_4 Fraction	2.436×10^6	20,833	50.7×10^9
D:			
E:			

TOTAL BTU'S 23 202.7×10^9 BTU'S

NET ENERGY CONTENT OF PRODUCT (ITEM 18 LESS ITEM 23) 24 1470.8×10^9 BTU'S

ENERGY CONTENT PER UNIT OF PRODUCTION (ITEM 24 DIVIDED BY ITEM 3) 25 35,018 BTU'S UNIT

GOAL (TARGETED ENERGY CONTENT FOR THIS PERIOD) BTU'S UNIT 26 35,000

IF ITEM 26 IS EQUAL TO ITEM 25, GOAL WAS MADE (CHECK ITEM 27) 27 ____ MADE GOAL

IF ITEM 26 IS NOT EQUAL TO ITEM 25, COMPUTE DEVIATION FROM GOAL:

(ITEM 26 LESS ITEM 25) 28 481

ITEM 28 DIVIDED BY ITEM 26 29 .0135

MULTIPLY ITEM 29 BY 100 30 1.35

IF ITEM 26 IS GREATER THAN ITEM 25, COPY ITEM 30 HERE 31 +1.35 % BEAT GOAL

IF ITEM 26 IS LESS THAN ITEM 25, COPY ITEM 30 HERE 32 — % MISSED GOAL

2

4 All significant input materials are listed even though they may not appear in the final product.

5 These quantities of materials were used during January, 1974. The desiccant may be purchased only once every six months, but a proportional amount is allocated to this month.

6 The energy content of ethane is the heat of combustion which is available from several reference books.

The energy content of caustic was estimated from literature sources.

The heat content of the hydrogenation catalyst and the desiccant are educated guesses. The quantities of these materials used are so small that the error introduced by an incorrect guess is insignificant.

11 The BTU'S per unit of steam are available from steam tables. In this case credit was taken for the hot water returned to the steam plant. 10,000 BTU'S/KWH was used since this is close to the energy that an average utility uses to generate a KWH of electricity.

1030 BTU'S/ft^3 of gas was provided by the gas supplier. The energy in the cooling and the process water is the power necessary to pump the water. The power in KWH'S/gallon was multiplied by 10,000 BTU'S/KWH to arrive at the BTU'S per gallon.

15 The oily, caustic water was neutralized and then treated in a bio-oxidation plant. The total disposal BTU'S include the energy to run the bio-oxidation plant plus the energy in the neutralizing agent, muriatic acid.

21 All of the energy contents here were assumed to be equal to the heat of combustion since these materials may be readily burned as fuel. Residue gas was assumed to be the same as light fuel oil, pyrolysis gas was assumed to be the same as toluene and the C_3-C_4 fraction was assumed to be butene.

The basic information in this example was taken from the Stanford Research Institute report on "Ethylene" dated August, 1967, page 219.

HY MEASURE ENERGY :

As energy is used more effectively, product costs can be reduced and profits improved. This can be ɔmplished even in the face of sharply increasing energy costs. Since industrial energy consumption ɔunts for approximately 40% of total energy used in the United States, significant contributions be made to the national effort.

The first step to meaningful energy conservation is measurement of all the energy that enters and ıes a plant during a given period. This measurement will probably be an approximation at first but uld improve with experience.

To calculate the energy content of your products, use the attached form, and then set goals for ırovement. The filled in example is for ethylene; but the procedure applies equally well to any ıufacturing operation, be it a grain mill pulp mill, steel mill, furniture factory, or assembly line.

Though time consuming and challenging to make the initial calculations, it will be worth the ɔrt. Raw materials which contain, and manufacturing processes which use large amounts of energy l be pinpointed.

What To Expect — Once BTU content is determined, products can be ranked by BTU'S per unit, U'S per dollar of sales, and BTU'S per dollar profit. Then, as energy availability becomes more ited, it will be possible to quickly focus on the most profitable products.

Equipment associated with the large energy consuming steps will be identified. Once the ırgy-hogging equipment is isolated, efforts can be focused on replacing old machinery and ıipment, using more energy-conscious designs, and improving maintenance programs.

Less energy-intensive raw materials should escalate less in price as energy costs increase. Having ermined the energy content of raw materials, and given a choice, a better raw material selection ıuld be possible.

Stressing the importance of BTU'S per-unit-of-production to plant operating people should ıvide the incentive for them to chase down where all of the input BTU'S actually end up. Often, the ıt attempt will account for less than 50% of the input BTU'S. Simply the act of identifying the ıer 50% will reveal many opportunities for improvement. For example:

1. A reduction in scrap or an improvement in yield will often be the most significant energy reduction that can be accomplished.
2. Leaking water, steam, inert gas or raw material may seem quite small as it escapes into the air, but over time this can represent a sizeable quantity of energy.
3. Heat loss from equipment can sometimes be reduced with more insulation once the losses are identified.
4. Sometimes energy lost to the environment, either through cooling water or through air, can be used advantageously to heat inlet raw materials or process equipment.
5. The energy content of waste may be recovered in part or in total by treating and recycling the waste back through the manufacturing process. In some instances, it may be possible to burn the waste and use the recovered heat in the process.
6. Temperature control equipment may be alternately heating and cooling. This problem is often corrected by a simple adjustment of the controls.
7. Recognizing that it takes 10,000 BTU'S to generate one KWH may suggest using less electricity for heating since this same KWH is capable of producing only 3,413 BTU'S of heat.
8. It may be possible to combine some manufacturing steps so that the product does not cool down between steps and subsequently have to be reheated before it is processed further.

The energy shortage is a national concern. It can also be viewed as an exciting challenge. Those mpanies that move quickly to meet the challenge will contribute substantially to the solution of a tional problem — and make money at it.

The first step is measurement.

196

IT.

MONTHLY DEPARTMENT ENERGY USE

1973	ELECTRIC POWER			NATURAL GAS			FUEL OIL			COAL			COMPRESSED AIR		
	kWh	Btu/kWh	Btu	k cu ft	Btu/k cu ft	Btu	gal	Btu/gal	Btu	TONS	Btu/lb	Btu	k cu ft	Btu/k cu ft	Btu
Jan.															
Feb.															
Mar.															
Apr.															
May															
June															
July															
Aug.															
Sep.															
Oct.															
Nov.															
Dec.															
1974															
Jan.															
Feb.															
Mar.															
Apr.															
May															
June															
July															
Aug.															
Sep.															
Oct.															
Nov.															
Dec.															

197

DEPARTMENT _____

MONTHLY DEPARTMENT ENERGY USE

	psig STEAM			psig STEAM			CONDENSATE USED OR LOST			WATER			TOTAL CONVERSION Btu	NUMBER OF UNITS PRODUCED	CONVERSION Btu PER UNIT OF PRODUCTION
1973	k lb	Btu/k lb	Btu	k lb	Btu/k lb	Btu	k lb	Btu/k lb	Btu	k lb	Btu/k lb	Btu			
Jan.															
Feb.															
Mar.															
Apr.															
May															
June															
July															
Aug.															
Sep.															
Oct.															
Nov.															
Dec.															
1974															
Jan.															
Feb.															
Mar.															
Apr.															
May															
June															
July															
Aug.															
Sep.															
Oct.															
Nov.															
Dec.															

198

DEPARTMENT _____

MONTHLY DEPARTMENT ENERGY USE

	RAW MATERIAL "A"			RAW MATERIAL "B"			RAW MATERIAL "C"			Total Raw Material Btu	Raw Material Btu Per Unit of Production	Total Conversion & Raw Material Btu Per Unit of Production
1973	k lb	Btu/k lb	Btu	k lb	Btu/k lb	Btu	k lb	Btu/k lb	Btu			
Jan.												
Feb.												
Mar.												
Apr.												
May												
June												
July												
Aug.												
Sep.												
Oct.												
Nov.												
Dec.												
1974												
Jan.												
Feb.												
Mar.												
Apr.												
May												
June												
July												
Aug.												
Sep.												
Oct.												
Nov.												
Dec.												

Tracking Chart

Energy Use Per Unit of Production

Attachment C

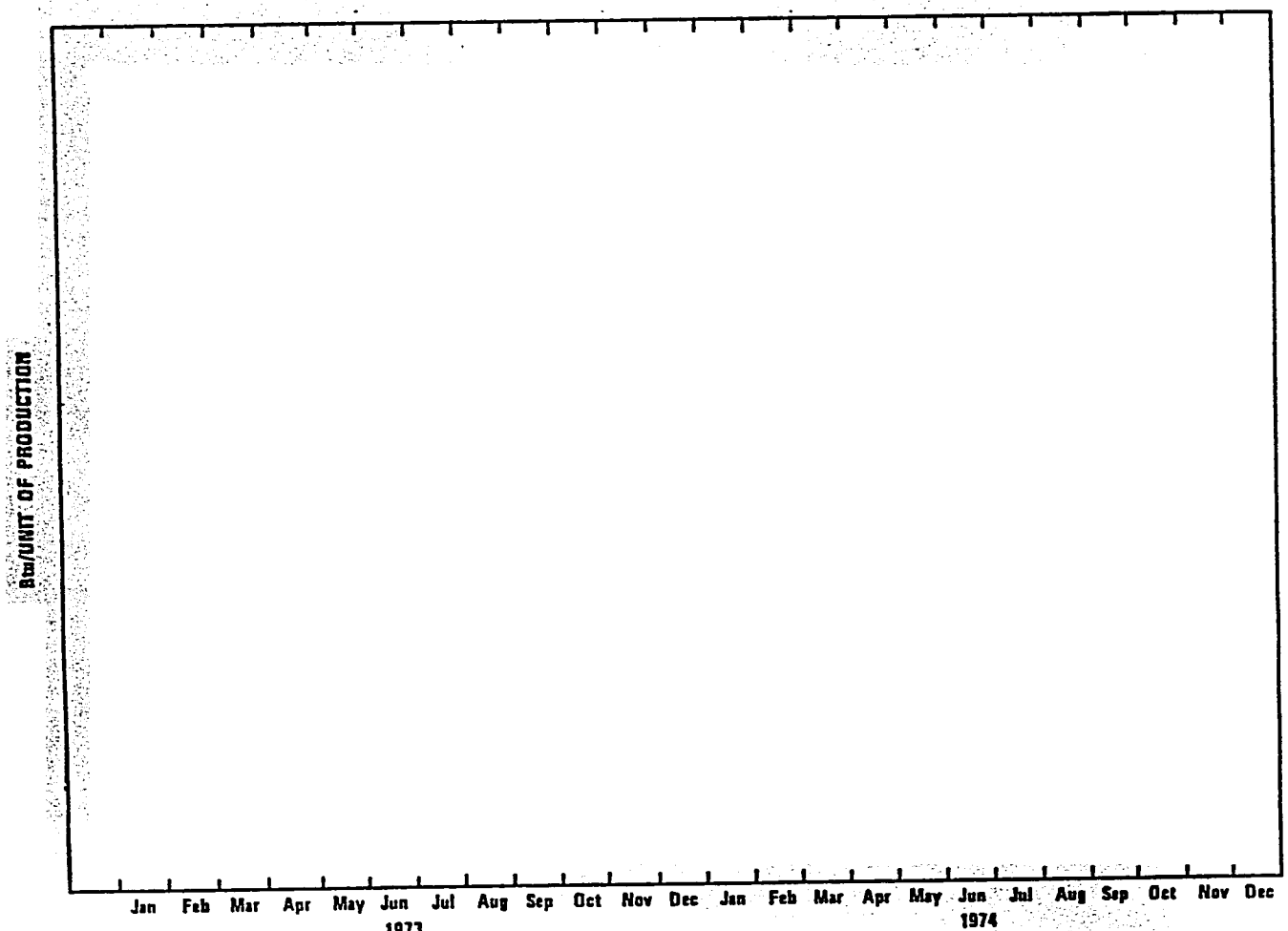

2.6 First Energy Saving Survey

The survey team's plan for the first survey was approved by the Energy Conservation Committee, you recall. Now we have a sequence of four letters regarding the survey. The manager endorses the survey plan. The team submits their timetable to department heads. Findings of the survey are reported. Finally, the team suggests the need for foreman training in energy conservation. Note the application of:

- Survey
- Employee involvement
- Top management commitment

2.6.1

ECONERGY COMPANY

INTER-OFFICE CORRESPONDENCE

Date: January 29, 1974

To: Department Heads

From: D. T. Parker, Plant Manager

Subject: First Energy Saving Survey

You each have a copy of the January 25, 1974, letter from W. D. Smith and A. B. Jones detailing their plans for the survey aimed at energy wastes that can be corrected by maintenance or operations actions. These are the types of energy losses that can be stopped or reduced right away, or fairly soon, and at little or no expense.

Smith and Jones will contact you in the near future regarding a time-table for the survey. Each of you should inform them of the name of the person you designate to accompany them and participate with them in the survey of areas under your responsibility.

Everyone's cooperation in this program is important. I urge that you put some real priority on this survey and on taking corrective actions as soon as practical.

cc: W. D. Smith, Operations "A"
A. B. Jones, Operations "B"

202

2.6.2

ECONERGY COMPANY

INTER-OFFICE CORRESPONDENCE

Date: February 1, 1974

To: Department Heads

From: W. D. Smith, Operations "A"
A. B. Jones, Operations "B"

Subject: First Energy Saving Survey

The timetable for this survey is given below. If any of these dates are not convenient, please contact us so that other times can be arranged.

Area	Date
Furnaces	February 11
Shop	February 12
Heat Treating	February 13
Shipping	February 14
Receiving	February 15
Laboratory	February 19
Utilities	February 20
Chemicals	February 21
Administrative Building	February 22

cc: D. T. Parker, Plant Manager

savEnergy
2-36

2.6.3

ECONERGY COMPANY

INTER-OFFICE CORRESPONDENCE

Date: February 28, 1974

To: Department Heads

From: W. D. Smith, Operations "A"
A. B. Jones, Operations "B"

Subject: Results of First Energy Saving Survey

Attached are the findings of the survey. Some of the operating items have already been corrected by operations personnel. Department supervisors have already written work orders for a number of the maintenance repairs. Those operating or maintenance items that require process shutdown for correction have been added to the lists of jobs to be done at the first shutdown opportunity by department supervisors.

It is important that we monitor the progress of work on correcting these energy wastes by keeping up-to-date records; therefore, it is essential that we are advised when each job is completed.

If there are any questions concerning the survey, please contact us.

As a result of the survey and some energy conservation projects being proposed, we have developed an estimate of potential savings and we suggest that our goal be increased to 12% savings in energy this year.

cc: D. T. Parker, Plant Manager
Energy Conservation Committee

ENERGY SAVING SURVEY

Department: _____

Date: _____

Surveyed by: W.D. SMI
A.B. JONES

Fuel or Gas Leaks	Steam Leaks	Compressed Air Leaks	Condensate Leaks	Water Leaks	Damaged or Lacking Insulation	Excess Lighting	Excess Utility Usage	Equipment Running & Not Needed	Burners Out of Adjustment	Losses of or Excess of HVAC	Location	Date Corrected
		near #1 furnace									Furnaces	
					#2 furnace lining						Furnaces	
						Parts Storage					Shop	
										Broken Window	Shop	
#3 furnace									#1 furnace		Heat Treating	
								#2 furnace			Heat Treating	
	Bldg. Heater Item							#1 conveyor			Heat Treating	
											Assembly	
						Storage Area					Assembly	
										Doors need weatherstrip	Shipping	
								Man cooler fan			Shipping	
						Above Shelves					Receiving	
								Fume hood fan			Receiving	
				safety shower							Laboratory	
						Chemical Storage					Laboratory	
	boiler										Laboratory	
					#2 steam line						Utilities	
		#2 compressor									Utilities	
	#1 reboiler										Utilities	
			#2 reboiler								Chemicals	
							steam jets				Chemicals	
						Hallways					Chemicals	
											Administration Building	
				Men's rm. faucet						return air condition	Administration Building	
											Administration Building	

2.6.4

E CONE. C. COMPANY

INTER-OFFICE CORRESPONDENCE

Date: February 28, 1974

To: J. C. Baker, Energy Conservation Coordinator
T. G. Marshall, Maintenance
R. B. Robinson, Administrative Services

From: W. D. Smith, Operations "A"
A. B. Jones, Operations "B"

Subject: Need for Supervisor Training Program

During our first energy savings survey we [illegible] nities to discuss energy conservation with the foremen accompanying us. We learned that these foremen should be made more aware of the costs of utilities, the potential of savings through conservation, and the methods for saving energy.

Therefore, we recommend that the Energy Conservation Committee design a course on energy conservation to be included in the Supervisor Training Program.

cc: D. T. Parker
Plant Manager

206

2.7 THIRD MEETING OF THE ENERGY CONSERVATION COMMITTEE

This meeting is the last to be recorded in this section. On the following pages are four memoranda dealing with the topics shown on the agenda. The last memorandum presents plans for special activities each month for the rest of the year. At this point an active, effective program should be well into the process of implementation.

2.7.1

ECOENERGY COMPANY

INTER-OFFICE CORRESPONDENCE

Date: March 8, 1974

To: Energy Conservation Committee

From: J. C. Baker, Coordinator

Subject: Agenda for Third Meeting of the Energy Conservation Committee

1. Capital project reviews
2. Energy saving project lists and project evaluation summary
3. Communication of ways to save energy
4. Continuing program

cc: D. T. Parker
Plant Manager

108

272

ECONERGY COMPANY

INTER-OFFICE CORRESPONDENCE

Date: March 8, 1974

To: Department Heads

From: D. T. Parker, Plant Manager

Subject: Capital Project Reviews

As you know, in our authorization procedure every capital project must be reviewed and approved with regard to safety, fire protection, pollution abatement, and additional utility requirements. As of this date, we are adding energy conservation to this checklist.

Every capital job will be reviewed by the Coordinator of the Energy Conservation Committee. On large jobs the interested committee member will also participate with the coordinator and project team. The purpose of these reviews is to assure that there is efficient utilization of energy in the design. If the project has to do with production, the design Btu per unit of production will be calculated and compared with the historical Btu unit ratio. More efficient use of energy is expected.

cc: Energy Conservation Committee

savEnergy

2-72

ECONERGY COMPANY

INTER-OFFICE CORRESPONDENCE

Date: March 8, 1974

To: W. D. Smith, Operations "A"
A. B. Jones, Operations "B"
T. G. Marshall, Maintenance
R. B. Robinson, Administrative Service

From: J. C. Baker, Energy Conservation Coordinator

Subject: Energy Saving Project Lists and Project Evaluation Summary

Some of our energy conservation projects will require capital; others can be done on expense. Therefore, we should have two separate lists of projects. In order to have the lists in a uniform format, the two attached forms for capital and expense projects are provided for use by all departments.

The ratio of energy savings/year per dollar invested is an indicator of how good a project is, compared to other projects. The higher the number, the better the project. In the forms, a column for percent return on investment is also included as an aid in assigning priorities on projects.

Also attached is an evaluation summary form to be used for each project.

Please submit copies of these forms to the key supervisors in your area and request that they enter their project information and return completed copies (lists and evaluations) before our next meeting one month from today.

Our manager, Mr. Parker, has requested that we continue working on the lists, revising and updating them monthly, adding new projects that evolve and additional maintenance jobs that become necessary.

cc: D. T. Parker, Plant Manager

210

ENERGY CONSERVATION
CAPITAL PROJECTS

Department: _____

Date: _____

Project Number	Project Description	Energy Savings Btu/Year	Capital Cost $	Ratio Btu/Year Saving / $ Capital	Percent ROI	Priority	Status

ENERGY CONSERVATION
EXPENSE PROJECTS

Department: _____

Date: _____

Project Number	Project Description	Energy Savings Btu/Year	Expense Cost $	Ratio Btu/Year Savings / $ Expense	Percent ROI	Priority	Status

ENERGY CONSERVATION PROJECT
EVALUATION SUMMARY

Capital _____ or Expense _____

Department _____

Date _____

Project No. _____ Person Responsible _____

Project Title: _____

Description of Project: _____

_____

_____

_____

_____

Location: _____

Financial Evaluation

Estimated

Energy saving (electric power kWh/yr steam lb/yr etc.)

Utility or Raw Material	Saving
_____	_____ /yr
_____	_____ /yr
_____	_____ /yr
Total energy saving	_____ MBtu/yr
Total energy cost saving	_____ $/yr
Other cost saving due to:	
_____	_____ $/yr
Additional cost due to:	
_____	_____ $/yr
Net cost saving	_____ $/yr
Cost of project	_____ $

ENERGY CONSERVATION PROJECT
EVALUATION SUMMARY

Calculated

Return on investment _____ %

Pay back period _____ months

Other _____ _____

Btu/unit of production: Now _____ After project implemented _____

Benefits/Problems

Product quality _____

Product yield _____

Production rate _____

Safety _____

Pollution _____

Maintenance-manpower/materials _____

Utilities _____

Working conditions _____

Employee attitude _____

Community _____

Other benefits/problems connected with implementation:

_____

_____

_____

Comments: _____

_____

Project rating: _____

_____

_____

Planned authorization request date: _____

214

2. .4

ECOLERGY COMPANY

INTER-OFFICE CORRESPONDENCE

Date: March 8, 1974

To: Energy Conservation Committee

From: T. G. Marshall, Maintenance

Subject: Communication of Ways to Save Energy

I have assembled a group of ECO's from EPIC, which are particularly applicable in our operation, along with a few good articles from the literature. I propose that we publish this as a booklet for plant wide use by supervisors. A copy of the list of ECO's chosen is attached hereto. After each of you has looked over the copy and indicated your approval, I will proceed with publication and distribution.

May I suggest that this booklet could be a useful tool in a training course as suggested in the recent letter from W. D. Smith and A. B. Jones.

cc: D. T. Parker
Plant Manager

savEnergy
2-48

215

LIST OF SUGGESTED ENERGY CONSERVING OPPORTUNITIES

	ECO
Building and Grounds	
Reduce Warehouse Ventilation Air	3.2.1
Reduce Outside Lighting	3.13.1
Reduce Air Conditioning During Non-Working Hours	3.2.5
Electric Power	
Schedule to Minimize Electrical Demand Charge	3.3.1
Steam	
Insulate Bare Steam Lines	3.4.1
Return Steam Condensate to Boiler Plant	3.4.3
Stop Steam Leaks	3.4.5
Inspect and Repair Steam Traps	3.4.6
Other Utilities	
Eliminate Leaks in Combustible Gas Lines	3.5.1
Lower Pressure of Compressed Air to Minimum Necessary Level	3.5.2
Eliminate Leaks in Compressed Air Lines	3.5.3
Use Fan for Personnel Cooling — Not Compressed Air	3.5.5
Combustion	
Replace Worn and Obsolete Controls	3.8.2
Daily Monitoring of Boiler Efficiency	3.8.4
Flue Gas Analysis as a Maintenance Tool	3.8.5
Scheduling	
Standby at Reduced Temperature	3.9.1
Shut Down Idle Heating Equipment	3.9.2
Process Specifications as a Source of Energy Savings	3.9.3
Schedule Equipment for Maximum Utilization	3.9.4

ECONERGY COMPANY

INTER-OFFICE CORRESPONDENC

Date: March 8, 1974

To: Energy Conservation Committee

From: J. C. Baker, Energy Committee Coordinator

Subject: Continuing Program

At this point we have our program well underway, but I believe you will agree that we need a continuing program to maintain our momentum. Periodic energy saving surveys are one important activity. Communication and education also need emphasis to develop awareness. I thought it would be well to list the elements in this area, some of which we already have in the mill and others we may wish to include in plans for the future.

1. Monthly meetings of Energy Conservation Committee.
2. Monthly meetings of each committee member with key supervisors in the area he represents.
3. Booklet on ways to save energy.
4. Energy conservation course to be included in Supervisor Training program.
5. Periodic bulletins or features in the Plant News publicizing energy saving achievements and recognizing individuals responsible.
6. Posters on energy saving to be used in much the same way as safety posters.
7. "savEnergy" decals for placing at light switches, typewriters, and on hard hats.
8. Technical talks on energy saving aspects of steam traps, lighting, insulation, etc.
9. Letters to employees and their families giving energy saving tips for the home.
10. In public relations, company ads stressing energy conservation on radio and in newspaper, talks on energy saving before civic groups.

Attached to this letter is the outline of a proposed program of activities for each month for the rest of the year.

cc: D. T. Parker, Plant Manager

savEnergy

217

Planned Activities in Energy Conservation for Remainder of 1974

The following activities will take place each month and will not be repeated in the plans for individual months:

1. Meeting of Energy Conservation Committee
2. Meeting of each Committee Member with the key supervisors in his area
3. Updating of energy saving project lists
4. Communicate progress with updated plot of Btu/unit of production
5. Department supervision will conduct weekend audit

Month

April
1. Distribute booklet of selected ECO's
2. Review status of corrective actions regarding first energy saving survey
3. Publish bulletin on energy saving tips for driving
4. Technical talk on steam traps

May
1. Energy conservation course in Supervisor Training
2. Departments develop energy balances
3. Distribute "savEnergy" decals
4. Technical talk on economics of insulation
5. Letter to employees at home with energy saving tips for the home

June
1. Trained foremen start holding monthly meetings with their people on energy conservation
2. Publish bulletin on air conditioning tune-up
3. As a result of energy balances, committee will conduct energy surplus survey
4. Coordinator gives talk at high school

July
1. Poster contest
2. Bulletin on energy saving during vacations
3. Survey of steam pressure reducing stations
4. Technical talk on lighting

August
1. Publicize poster contest winner in plant and community newspaper
2. Distribute posters
3. Survey compressed air requirements
4. Bulletin - "Don't use compressed air for cooling"

Sept.
1. Bulletin - "Tune up space heating systems"
2. Survey steam condensate system
3. Coordinator prepares talk with slides for local technical society meeting
4. Committee rides through plant at night and suggests corrective action on lighting

October
1. Demonstration of infrared survey to detect excessive heat losses
2. Steam trap survey
3. Bulletin on steam tracing systems
4. Technical talk on combustion

November 1. Survey oversized electric motors and equipment
2. Bulletin - Recognize someone's energy saving achievement
3. Second course in Supervisor Training
4. Technical talk on electric motors and power factor

December 1. Bulletin - "Use reflectors and reduce Christmas lighting"
2. Report achievements in reductions of energy use and announce goal for next year
3. Survey use of low pressure steam
4. Plan program activities for next year

2.8 CONCLUSION

This section on program implementation began with a discussion of the importance of management interest and support. It seems appropriate to include in the conclusion a letter from the manager to his staff demonstrating his *continuing concern* about energy conservation. His request for a contingency plan is then answered by his department heads with a report on the status of the contingency planning in each deparment.

.8.1

ECONERGY COMPANY

INTER-OFFICE CORRESPONDENCE

Date: March 2', 1974

To: Department Heads

From: D. T. Parker, Plant Manager

Subject: Request for Energy Curtailment Contingency Plan

You should all be aware that energy supply is a very real and serious problem to our operations. Briefly, our anticipated allocations of fuel oil, natural gas, electric power, and gasoline are insufficient to support our operation as they have in the past. Our ability to eliminate unnecessary use of these commodities and to allocate fuel to vital functions will ultimately determine how severely our operations are curtailed.

Even more serious is our inability to secure adequate quantities of coal to meet anticipated needs. Efforts during the past two months have failed to increase deliveries, and inventories are currently at a low level. Current fuel suppliers are operating at their ultimate capacity and they face problems associated with weather, fuel shortages for their mining equipment and ever increasing strip mine regulations. To date, we have been unable to secure additional suppliers as those who are mining coal are sold out beyond their production capabilities.

At this time it appears that some production curtailments may be necessary. Each supervisor should review his operations: those pieces of equipment which are operating at less than desired efficiency with respect to energy consumption should be identified and plans made to restrict or curtail their operation. The basic factors which influence fuel efficiency and/or energy utilization in all processes should be identified and immediate steps taken to minimize our energy requirements.

savEnergy

2-54

221

In anticipation of possible short term reductions in energy supply, for instance electric power, we need a contingency plan. This should include a list of the equipment that would be shut down and the sequence of shut down in your department in case of 25%, 50%, 75% and 100% energy curtailments.

Your plan for reducing energy requirements in your area should be formalized and available for review by me one week from today. Remember - NO SAVING IS TOO SMALL TO BE CONSIDERED.

cc: Energy Conservation Committee

savEnergy

2.3.2

ECONERGY COMPANY

INTER-OFFICE CORRESPONDENCE

Date: March 27, 1974

To: D. T. Parker, Plant Manager

From: Department Heads

Subject: Reduction of Energy Requirements and Contingency Plan Status

Significant reductions in energy use have been achieved in our operating units as follows:

Utilities

It has been our operating practice to fire all three boilers even though steam requirements could be provided by two boilers fully loaded. In this way, a forced outage of one boiler could be handled without decreasing steam output and causing interruption of operation of steam users.

We have shut down #1 boiler, the oldest and least efficient boiler, a the result is a fuel saving of ____M Btu/hr. In case of a forced outage of one of the two operating boilers, we have set up a communic procedure to curtail steam to certain units that can be shut down sai and quickly with the least impact on other operations in the plant a re-started with a minimum loss of productivity.

Conversions "A" and "B"

Similarly, in both departments, we have been able to shut down one of three furnaces by rescheduling throughput. The schedule is extremely tight at our present production rate, and on occasion we may need to fire up the third furnace in order to meet commitments. Fuel saving at present is _____M Btu/hr.

savEnergy

223

Contingency Plan Status

1. Electric Power

In general, during any curtailment of power, air conditioning thermostats in all buildings will be reset to ____F. System interlocks have been provided to avoid inadvertant operation of the heating system, except in those situations where the controlled lower humidity is required.

If a "brown out" occurs (voltage reduction in excess of 10%), certain motors trip off automatically and others must be tripped manually to avoid damage. We are surveying all motors to identify the ones that require manual tripping. Utilities will set up a communication procedure to inform the appropriate people when a "brown out" occurs.

Following is a tabulation of shutdowns sequence for curtailments of electric power:

Curtailment	Shutdown Section
25%	1
50%	1,2
75%	1,2,3
100%	1,2,3,4

We have designated a number of units that will be included in each of the four sections but the plan is not complete yet.

2. Fuels

For each fuel, we will have a tabulation like the one for electric power. We are holding meetings this week to complete the designation of units in each section for each tabulation. We hope to submit the detailed plan to you next week.

In general, when fuel curtailment causes a cut-back in steam generation, all steam heated buildings will have thermostats reset to ____F. Again, system interlocks will prevent inadvertant operation of the cooling system, except where the controlled lower humidity is required.

EMPLOYEE MOTIVATION AND COMMUNICATION METHODS

David M. Heller
Air Products and Chemicals, Inc.
Paulsboro, New Jersey

ABSTRACT

This paper discusses the compelling reasons for involving all employees in the plant energy conservation effort, offers suggestions on how to implement and maintain a plant-wide, people oriented conservation program and provides examples to illustrate the methods involved and benefits possible. Three areas will be stressed: publicity, or communicating down the ladder, through newsletters and the use of distinctive logos; communicating up the ladder, by means of employee suggestion programs and discussion forums; and training, necessary to free employees from a pre-Embargo approach to manufacturing.

Current technical literature is full of information on how to reduce energy use. Consider energy management systems, waste heat recovery or heat pumps - all the facets of the design, construction, and operation of such equipment and many other new devices takes up an ever-increasing amount of our time. No one can deny the benefits achievable through capital investment and new technologies, but there are other, oft-neglected aspects of energy conservation to be considered. The development and use of an effective energy management organization and the involvement of the entire plant in the conservation effort can and should go hand-in-hand with the physical improvement of the operation.

I'd like to share with you my experiences as a member of one very successful energy management organization - explaining how we are set up to implement energy conservation and detailing a number of programs we have found effective.

ORGANIZATION FOR ENERGY CONSERVATION

I am employed as Technical Supervisor at Air Products and Chemicals' Paulsboro, New Jersey plant. The Paulsboro Plant is part of the Chemicals Group of Air Products. We are located in Southern New Jersey, in the Greater Philadelphia area. Of our 3[illegible] employees, 25 are exempt and the balance hourly or non-exempt. We produce various types of industrial catalysts, with our major product being DABCO, a tertiary amine foam catalyst.

The Paulsboro Plant has seen sharply spiraling energy costs over the last few years, as we all have. From 1978 to 1981, our average cost for energy rose more than 50 percent. The impact of these costs

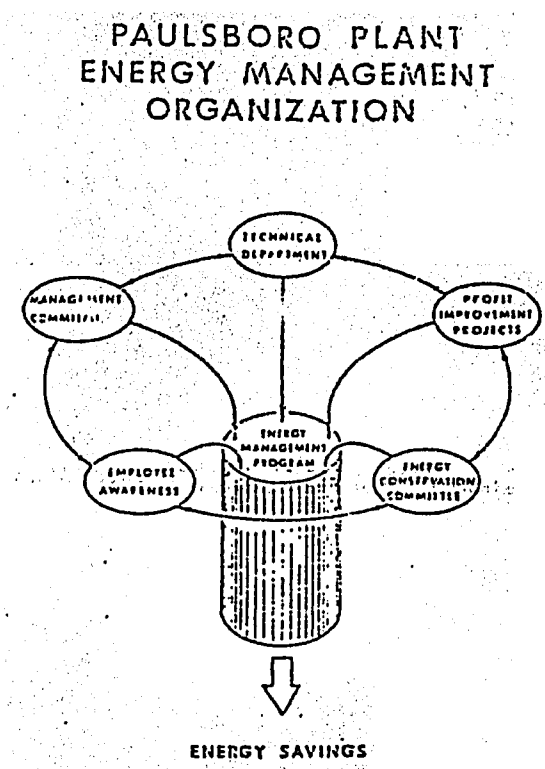

FIGURE 1

forced us to re-evaluate our conservation efforts and two conclusions came to light. First, conservation projects once glossed over because of a low rate of return now looked more attractive. It became necessary to refocus our technical efforts towards auditing our process flows and examing heat and material balances with the proverbial 'fine tooth comb.' Secondly, we came to realize that in order to be successful in reducing energy costs it made sense to involve the entire plant in the effort, not just a handful of engineers and technicians. The Paulsboro Plant conservation effort was thus or-

PAULSBORO
ENERGY REPORT

NUMBER 10
2 JULY 1981

ENERGY USAGE REMAINS DOWN

Plant energy usage was 4.0% less than the same period
member to keep your eyes open for energy waste.

THIRD QUARTER SUGGESTION DRAWING

s ticke as this quarter's winner of a $25 gift certi-
suggestions. Thanks to everyone who submitted
er the last three months.

STEAM TRAP CAPS

round of steam trap inspections, Dave DiFietro will
all steam traps. The caps insulate the traps by
of dea air around the trap and protecting it fro
ave about ,500 a year on our steam bill. Plant ste
every three months.

OXIDIZER SAVINGS

ls on the Thermal Oxidizer saved $20,000 in natural
or $80,000 over the entire year. A f bugs cropped
woul have been even greater.

SEE THE LIGHT

t lamps produce up to five times as much light for the
s incandescent lamps and last 10 to 15 times longer.

er not measure the amount of light - it measures the
ed to light the bulb. The amount of light is measured
namele - you need six 25-watt bulbs to equal the
e 100-watt bulb.

d wive's tale that ther is a surge of power when you
l gh . If you leave a room, even for a minute, turn
t.

* *

U HAVE ANY SUGGESTIONS FOR IMPROVING THIS
DROP THEM IN THE SUGGESTION BOX.
E YOUR IDEAS. THANKS.

FIGURE 2

226

ganized along the lines shown in Figure 1.

The Technical Department and Technical Supervisor have major responsibility for the program. The Technical Supervisor serves as Plant Energy Conservation Coordinator; a part-time function at Paulsboro, but a position that requires full-time attention at larger facilities. The Conservation Coordinator's responsibilities include: developing and communicating conservation techniques and ideas to the employees, monitoring and reporting plant energy consumption, developing plant programs, goals and budgets and maintaining a plant environment conducive to energy conservation.

The Profit Improvement Program is a suggestion program for our technical people. This program encourages new ideas and recognizes the contributors.

The Energy Conservation Committee is composed of representatives from Production, Maintenance, Technical and Project Groups. The Committee meets monthly to discuss and evaluate the status of the plant conservation program. The Committee feeds information to the employees and communicates employee's concerns to management. The most important function of the Committee is to serve as a place where inter-departmental problems involving conservation projects or programs can be resolved.

Management commitment is a major component of our overall effort. Management communicates standards and goals and measures performance. Group and Corporate management provide support through people and capital, and acts as a clearing house for ideas. On the plant level, management communicates directly with the employees through our newsletter and letters sent to the homes.

The position of Energy Coordinator, the PIP program, and the Conservation Committee have all been active for a number of years. I believe the fact that we have organized specifically for the conservation of energy has helped us keep the effort alive and has resulted in a number of outstanding innovations. Now, I'd like to focus on the last box in our organization diagram - employee awareness.

INVOLVE THE ENTIRE PLANT

Proper motivation of operating, maintenance, laboratory and clerical personnel can be one of the most cost-effective energy conservation techniques. Hourly employees have the closest contact with the operating equipment and are often the most knowledgeable about production problems and unit idiosyncracies. They will see things that you as an engineer or manager might overlook and they will extend your eyes and ears to round-the-clock coverage.

These people are just as concerned as you are about the continued escalation of energy costs and the implications of dependence on foreign oil. Our responsibility is to direct them to utilize on the job the same resourcefulness they demonstrate in dealing with home energy problems.

What kind of results can be expected? The effects of improved operations and maintenance are often difficult to quantify - a steam leak reported a few days before a supervisor notices it, a spare pump turned off, a steam tracing line insulated rather than ignored. Then again, an operator might suggest a process modification that could yield large savings. There are also a number of intangibles - an improved morale, an esprit de corps, a spirit of cooperation. The point is that the benefits will far outweigh the costs of organizing the program and maintaining the effort.

There are many methods that can be used to motivate and communicate with your employees. The approach should be one of common-sense, stressing facts, with just enough pizzazz so they are noticed, without being laughed at. I'd like to stress three areas - publicity, or communicating down the ladder, communicating up the ladder, and training.

PUBLICITY

The "Paulsboro Energy Newsletter, (Figure 2) was developed to publicize the plant program. The Newsletter has been published monthly since October, 1980 and is posted on plant bulletin boards. A variety of items are presented - updates on plant conservation projects, recognition of outstanding contributions, progress toward conservation goals, and home energy tips.

The Newsletter has been very well received by our employees. One comment I often hear is that they feel better about their jobs and relations with the plant when they're told what's going on. Now that we've established an energy conservation presence at the plant, I find employees asking me if I have any information on air conditioner sizing, solar heating, and other items discussed in Newsletters.

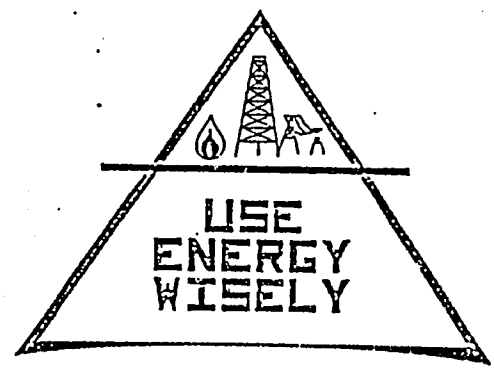

FIGURE 3

Please notice the emblem in the top left corner of the Newsletter (Figure 3). One of the first steps in publicizing Paulsboro's program was the development of an energy logo. This is a recognition tool used on all our conservation literature. We based ours on our corporate logo, adding the simple phrase "USE ENERGY WISELY" and adding a gas flame, an oil derrick, and electrical transmission

lines to illustrate our plant energy sources. One excellent way to kick off a conservation program is to hold a logo design contest among employees, or their children.

The types of publicity vehicles you employ will depend on your imagination, and your ability to judge what will be effective at your location. Handouts and pay envelope stuffers can present useful news, especially home conservation tips. These items can be obtained at a nominal price from public and private energy conservation organizations. Your local utility companies should also be a good source of information. This material is usually presented on a seasonal basis - heating tips in January, air conditioning ideas in July.

LISTENING TO EMPLOYEES

While communication down the ladder has been stressed to this point, input from the hourly employees should not be ignored. The programs already mentioned will help promote a spirit of cooperation at your location and employees will feel better about approaching their supervisors with their thoughts and ideas. And the number and quality of these ideas would probably surprise many of you.

To help tap this source of information, an Energy Conservation Suggestion Program was begun at Paulsboro. Our capital expenditure consisted of a short form and a suggestion box. Each suggestor receives a personal reply thanking him and explaining what the follow-up action will involve. The reply is most important, unfeasible and even absurd suggestions are acknowledged in order to show we appreciate the interest and respect the input. Responsibility for acting on worthy suggestions is assigned at Conservation Committee meetings. (Figure 4).

During the first full year of operation twenty-five percent of our hourly personnel submitted suggestions and total suggestions numbered sixty. Quarterly a randomly drawn suggestion wins a $25 gift certificate at a local department store and a $50 certificate is given each year for the best suggestion. After completion of all projects and work orders resulting from last year's suggestions total savings are expected to be $25,000. The suggestions have included items such as: installation of light switches in under-utilized rooms, installation of skylights to reduce the need for light fixtures during the day, and lists of areas requiring insulation that were overlooked during energy audits. We have received only a few worthy process improvement suggestions to date. Process improvements could of course save many times over the $25,000 figure.

There are pros and cons on the question of prizes. One of the most-voiced complaints - when prizes are discontinued the signal is given that the program is ended. This is a valid point, and the answer must be decided at each location, based on

E1-31

ENERGY CONSERVATION SUGGESTION

TO SAVE ENERGY IN THE PLANT, I SUGGEST:

SHUT OFF GLYCOL CIRCULATING PUMP FOR DABCO II STILL WHEN NOT IN USE.

PUMP RAN 22 DAYS DURING JANUARY WHILE STILL WAS DOWN.

SUGGESTOR [illegible] DEPT. OPERATIONS DATE [illegible]

SEND SUGGESTION TO: DAVE HELLER

(Figure 4)

228

past experiences. Any publicity or motivational program is going to slack off after the first flush enthusiasm. This can be discouraging and help put a damper on everyone's conservation spirit. Let me suggest that this slackening off is a signal to transfuse some new ideas into your program.

I have always had an aversion to the use of competition between shifts as a means of promoting energy conservation. The key point in any awareness program should be cooperation, and competition, as friendly as you might try to make it, will often ruin any cooperative spirit. As an example, at a plant where I was formerly employed, we were interested in seeing which shift could produce the highest percentage of on-spec product. It was discovered that the operators on one shift would come in and rearrange the settings on a number of critical instruments to settings they knew worked well. Just before the shift ended, they would return the settings to those in use before they came on. Of course, after running lined-out for seven and one-half hours at one set of conditions the unit would go to pieces and the next shift would require several hours to get lined-out again. We decided after that to stick to softball for inter-shift competition.

ENERGY CONSERVATION TRAINING

Back in the good old, pre-Embargo days, it was not uncommon for operators in the chemical industry to use a little extra energy to maintain a safety margin on product quality. Increasing the reflux rate on a distillation column is one example. More often than not, supervisors shared the blame for wasting energy since they took the lumps if the product was off-spec. Unfortunately, old habits die hard. Employees must be re-trained to respect energy costs.

As I mentioned earlier, an "energy-awareness" is a necessary first step. But specific training will also be required.

One of the first things our supervisors did at Paulsboro was to re-read and where necessary, revise operating procedures to focus on conservation. There is no point in purifying a product way beyond its specification. We also expanded our preventive maintenance program in the hopes that it would help us eliminate energy-intensive startups and shutdowns.

This year, we plan to introduce energy training sessions for all employees, similar to a program we now use for safety training. A typical session could include an explanation of the operation of a new piece of equipment, information on how much a steam leak can cost and how to report one, and a question-and answer period on energy issues.

Currently, we are developing an energy conservation slide show for presentation to all employees at upcoming training sessions. The program will use photographs shot at our plant to explain our energy usage, showing plant utility tie-ins, the operation of energy users, examples of energy wasters - such as steam leaks, and uninsulated lines, methods for reducing energy use and a review of plant utility costs. The slides will be accompanied by a tape recorded narration. Employees relate well to this type of program since it is specific to their activities. At a cost of twenty to thirty dollars per show, "homemade" training aids are less expensive and more effective than commercially available programs.

A number of equipment vendors present short training seminars for operating personnel. Recently, we had a steam trap manufacturer present information on trap inspection and repair techniques to our maintenance men.

Instruction in conservation techniques should be included in the training of new employees, but if experienced men are used to train the newcomers, as is often the case, be sure the experienced ones are not going to hand down a pre-Embargo approach to manufacturing.

In summary, I've tried to present a "punch-list" of techniques and tools to increase the effectiveness of your energy conservation programs. Consider organizing for energy conservation. And try to find one person in your organization who shows an interest in conservation and formalize that interest into the position of conservation coordinator. Many methods are available that will pull your entire organization into the effort - newsletters, handouts, posters. Remember to listen to your employees too, through suggestion programs and forums. And retrain your people to appreciate the impact that energy is having on the cost of doing business.

The mix of methods you use will of course, vary with the type and size of the audience and the resources available, but I hope you have discovered one or two techniques that might be worth a try.

Fig. 1. Data collection provides information on the need for capacitors. After capacitors are installed, data should be taken to see if they are operating correctly (as shown at left), providing the necessary kVAR, and not contributing to serious harmonic problems. Photo courtesy of Capacitor Products Dept., General Electric Co.

Applying Capacitors To Improve Operations

Importance of evaluating, planning and economics is discussed

Low power factor can be a plague to any industrial or commercial business in the form of excessive utility charges. Some power companies adopt rate structures penalizing a customer for low power factor while providing a bonus for high power factor. Low power factor results in higher peak kW requirements, thus affecting equipment utilization. A greater percentage of equipment kVA ratings is needed to supply magnetizing currents. The material that follows lays the groundwork for remedial action in the form of power capacitors.

Data Collection

Plant pf can be measured with portable metering instruments (see Fig. 1). Chart recorders tracing the load cycles over a 24 hour period for one week are recommended. The two wattmeter method may be applied to loads with stable demand. Utility metered kW and kVAR data will suffice for the service entrance. Rate schedules are available from the utility and should be studied for choosing an economical solution. Figure 2 is a typical utility rate structure showing how an electrical system's pf may affect a client's utility bill. Data collection should include harmonic voltage levels, which can be measured with frequency spectrum analyzers.

Causes Of Low Power Factor

Partially loaded induction motors create the largest reactive power demand on the system sources. A conservative motor size is usually selected in anticipation of the maximum accelerating and torque characteristics of the mechanical load. The variation of motor power factor (pf) with changes in shaft load is represented graphically in Fig. 3.

The phasor diagram in Fig. 4 illustrates the effect of adding capacitive kVARs to a load having a lagging pf. The two main reasons for installing capacitors are power capacity release and reduction of utility charges. An analytical tool for calculating the kVA, kVAR and pf variables is the power triangle, shown in Fig. 5. Trigonometric formulas will complete the triangle with knowledge of any two parameters.

Capacitors On Motor Feeders

The optimum location for power-factor correction capacitors is at the terminals of an induction motor. This arrangement, illustrated in the single-line diagram of Fig. 6 (capacitors C4 and C6), insure proper matching in time and magnitude of capacitive kVARs to the inductive kVARs of the motor for the desired power factor. Common circuit protection and switching can be utilized to serve the combination of motor and capacitor. In some instances, the feeder cable size can be reduced as a result of the decreased line current.

Motor Starting Effects

When switched into a power system, the capacitor bank will draw a high-frequency inrush current, charging in one cycle or less. For an isolated capacitor, the inrush current and frequency can be calculated from the equations:

$$I_s = (\sqrt{2})\left[\frac{\text{CkVAR}}{(\sqrt{3})(V_L)}\right]\text{amps}$$

$$I_{PK} = (I_s)\left[1 + \frac{\text{Short Ckt. kVA}}{\text{CkVAR}}\right]\text{amps}$$

$$f_T = f_s\left[\frac{\text{Short Ckt. kVA}}{\text{CkVAR}}\right]\text{Hz}$$

Where:

I_s = steady state peak current (crest value)
I_{PK} = peak inrush current
f_T = transient frequency
f_s = steady state frequency
CkVAR = capacitor kVAR
V_L = line voltage in kV

To prevent nuisance tripping of the circuit breaker because of the short-time, high-peak inrush, harmonic restraint devices may be applied to the protective relay for

By Joseph W. Fay, P.E.,
Syska & Hennessy, Consulting Engineers

230

the circuit breaker to ride through the inrush period. For example, assume the short circuit capability at the location of C4 in Fig. 6 is 75 MVA. Then the calculated peak inrush current is 898 A with a transient frequency of 1039 Hz. The derivation follows:

$$I_s = (\sqrt{2})\left[\frac{\text{CkVAR}}{(\sqrt{3})(V_L)}\right] = (1.41)\left[\frac{250}{(1.73)(4.16)}\right] = 49\text{ A}$$

$$I_{PK} = (I_s)\left[1+\sqrt{\frac{\text{Short Ckt. kVA}}{\text{CkVAR}}}\right] = (49)\left[1+\sqrt{\frac{75{,}000}{250}}\right] = 898\text{ A}$$

$$f_T = (f_s)\left[\sqrt{\frac{\text{Short Ckt. kVA}}{\text{CkVAR}}}\right] = (60)\left[\sqrt{\frac{75{,}000}{250}}\right] = 1039\text{ Hz}$$

Motor starting effects with capacitors applied usually do not improve the voltage more than 5%. The nameplate kVAR rating of the capacitor bank can be used for calculating the voltage drop during starting conditions. Applying the percent voltage drop method (not described in this article because of space limitations) to the 1000 hp load of Fig. 6, the percent voltage drop is 6.5% without capacitor C4, and 6.2% with the capacitor added. For the 480 V, 200 hp motor, the drop is 6.1%, improved to 5.9% with capacitor C6. Therefore, with shunt capacitors on the circuit, the voltage improvement is a small 3% to 5%.

Steady-State Voltage Operation

One of the myths in power capacitor applications is the belief that system voltage problems will disappear with a dramatic voltage rise. In reality, capacitors are not purchased to remedy low voltage. With the exception of overhead distribution systems and associated high reactance, the voltage improvement will usually be small, producing a rise of between 2% and 5%.

When the system resistance/reactance (R/X) ratio is less than 1, an approximate formula for the voltage rise can be applied:

$$\%V\text{ rise} = \frac{(\text{CkVAR})(X)}{10 \times (\text{kV})^2}$$

Where:

CkVAR = capacitor nameplate rating in kilovars,

and X = system reactance in ohms from the source to the capacitor location and incorporates the reactance of all electrical system components, e.g., transformers, buses and other conductors. The system reactance must be calculated on the basis of one standard voltage level for the entire electrical system.

For example, the voltage rise at the 480 V bus in Fig. 6 can be calculated for a pf correction from .75 to .92 using

Demand Charge: Per kilowatt of maximum demand, $5.00
Energy Charge: All kilowatt-hours, per kWh, $0.07
Power Factor Adjustment (power factor to be computed at the time of peak kilowatt demand.)

Penalty: A penalty, based on the number of percentage points *below* 85% of an installation's power factor, will be charged, based upon: (.85 minus actual pf)(peak kW)(demand charge)

Bonus: A bonus (rebate) based on the number of percentage points an installation's power factor is *above* 85%, will be deducted from the utility bill and will be based upon: (actual pf minus .85) (peak kW)(demand charge)

Fig. 2. A typical utility rate structure. Not only do different utilities have different rates, a number of utilities have different rates for different areas they serve. A rate structure must be evaluated carefully to carry out an economic analysis.

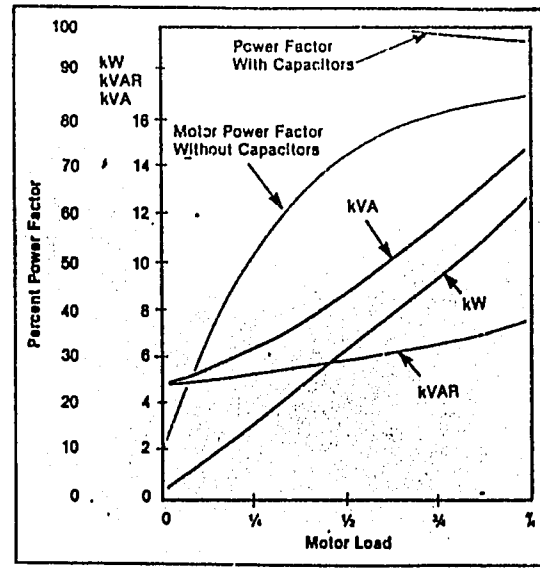

Fig. 3. Typical characteristics of a 15 hp induction motor. Changes in load affect all the parameters.

340 CkVAR of capacitors. In the one-line diagram shown in Fig. 6, the system reactance is based upon the 480 V level and has been calculated to be 0.0145 ohms.

$$\%V\text{ rise} = \frac{(340)(.0145)}{10 \times (480 \times 10^{-3})^2} = 2.14\%$$

Alternatively, the percent method of voltage drop calculation can be used as another method (based on the difference of voltage drops) for finding the percent voltage rise because of capacitors being added to the system. This method can be used as a check to the above formula.

$$\%V\text{ drop} = 100\left(1-\frac{Z_L}{Z_s}\right)$$

where Z_L = impedance of the load, including capacitors, and Z_s = total system impedance, including Z_L

%V drop (w/o cap) = 4.11% drop
%V drop (w/ cap) = 1.97% drop
2.14% voltage rise

The actual kilovars generated by a capacitor installation will vary with the applied voltage as follows:

$$\text{actual CkVAR} = \text{rated CkVAR} \times \left(\frac{\text{operating voltage}}{\text{rated voltage}}\right)^2$$

NEMA standards require capacitors to carry 135% of rated kilovars including the fundamental and harmonic components.

Sizing Capacitor For Connection At Motor

The CkVAR rating of capacitor banks should be carefully selected so as to produce maximum power factor correction, while minimizing the possibility of transient overvoltages. This is accomplished by choosing a nameplate CkVAR value that is slightly below the motor no-load magnetizing requirements, available from the manufacturer or by test. The tabulated data in Fig. 4, from the article on motors, page 22, can be used as a guide line for this selection.

Transient overvoltages may result if excessive corrective kilovars are connected to the motor terminals. Upon opening the circuit breaker the load inertia will maintain rotation while the stored energy in the capacitor discharges

231

to provide field magnetization. This results in induction generator action. With the conservative values of Fig. 4, (pg 22) selected for capacitor sizing, and normal deceleration of the load, this problem is eliminated. Article 460-7a of the NEC governs the maximum size allowable for the shunt capacitor.

Circuit Protection

Common circuit protective devices can be utilized if some adjustments are made. The overload relay will be desensitized because of the reduced line current with the capacitors connected. Therefore, a new setting is required, responsive to that component of the line current which is due to motor loading. Article 460-9 of the NEC references overcurrent protection.

When steady-state harmonic currents exist, the extent to which they add to the circuit loadings depends on the magnitude and frequency of the system harmonic voltages. If a third harmonic current flows, the resulting total rms current is:

$$\sqrt{(I_1)^2\text{rms} + (I_3)^2\text{rms}}$$

where $(I_1)^2$ rms is for 60 Hz and $(I_3)^2$rms is for 180 Hz. Adjustment of the long time trip element may be necessary to prevent the new full load current from exceeding equipment thermal ratings.

Transient Torque

This condition results from the closing of a circuit breaker into a capacitor-corrected motor circuit having a residual voltage. It is similar to the paralleling of synchronous generators with out-of-phase voltages. Therefore, reclosing and motor jogging applications are not recommended. Reduced-voltage starting equipment may produce transient torques when transfer is made to the full voltage tap. Sufficient time should be allowed for the stored energy of the capacitor to discharge prior to reconnecting to the system. Selection of capacitor sizes from the table in Fig. 4, (pg 22), will decrease the chance of having transient torques resulting from overcorrection and excessive capacitive kilovars.

Circuit Losses

Electrical equipment losses are reduced with capacitors by the change in the square of the line current. By itself, this loss savings is seldom sufficient to justify the purchase of capacitors. However, the savings in losses serves as an added benefit. The kW loss component of total power will remain virtually unchanged, but the kVA is reduced and the associated I^2R loss will also be reduced. This results in the shaving of peak kW demand and lower kWh energy costs.

The kW losses in a typical plant vary from 2% to 5% of the load kWh, depending on the load factor and operating efficiency. As a measure of the reactive line losses, the percent of total losses because of reactive power flow equals

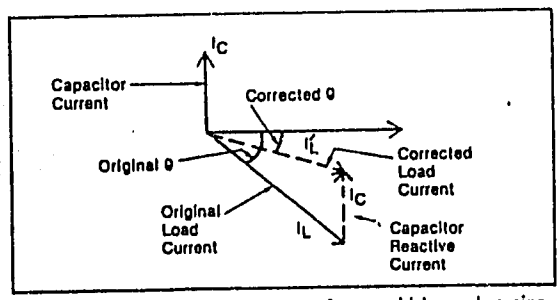

Fig. 4. A phasor diagram. The power factor, which equals cosine θ, is improved when the reactive load is decreased.

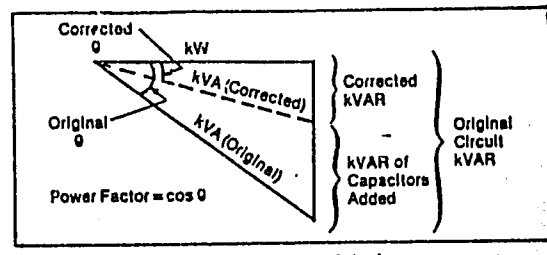

Fig. 5. A power triangle. Using some of the known parameters, trigonometric calculations will reveal missing data.

$\sin^2\theta$ where θ is the power factor angle. For example, if the power factor is .75, θ = 41.4 degrees, $\sin^2\theta$ = .44 and 44% of the total losses are reactive.

The kW percent loss reduction from an improved power factor can be calculated:

$$\%\text{kW loss reduction} = (100)\left[1 - \left(\frac{\text{pf original}}{\text{pf corrected}}\right)^2\right]$$

The monthly kWh saving is computed by the following equation:

kWh saving = [(peak kW loss)(% loss reduction)–capacitor loss](720)(load factor)($/kWh)

Where:

$$\text{Load factor} = \frac{\text{kWh per month}}{(\text{peak}\cdot\text{kW})(720 \text{ hr per month})}$$

Sometimes overlooked in loss studies are the capacitor losses which typically are equal to 0.15 W/kVAR for all film and 0.5 W/kVAR for paper film capacitors. This should be considered in all energy/economic studies.

Using the one-line diagram shown in Fig. 6 and the typical rate structure in Fig. 2, an example of circuit losses, energy savings after pf improvement and resulting cost benefits follows:

Given:
1000 ft 1-3/C No. 2/0 cable, where R = 0.107 ohms per phase
1000 kVA load @ .75 power factor
340 CkVAR capacitors
corrected power factor = .92
monthly load factor = .5

Computation:
capacitor losses = (340 kVAR)(0.5 W/kVAR)
= 170 W = 0.17 kW

$$I^2R \text{ losses} = \left[\frac{1000 \text{ kVA}}{(\sqrt{3})(4.16 \text{ kV})}\right]^2 (3 \text{ phases})(.107 \text{ ohms/phase})$$

$$= (139)^2(0.321) = 6202 \text{ W} = 6.202 \text{ kW}$$

$$\%\text{ kW loss reduction} = (100)\left[1 - \left(\frac{.75}{.92}\right)^2\right] = (100)(1 - .665)$$

$$= (100)(.335) = 33.5\%$$

Savings per month:
kW demand = [(I^2R loss in kW)(% kW loss reduction) –capacitor loss] (demand charge)
= [(6.202)(.335)–.17]($5/kW) = $9.54
Energy Savings = [(peak kW loss)(% loss reduction) –capacitor loss] (720 hr/mo)(load factor)($/kWh)
= [(6.202)(.335)–.17](720)(0.5)(0.07) = $48.07
Total savings per month = $9.54 + $48.07 = $57.61

232

Load Center Capacitors

The purpose of locating capacitors at the service entrance and power distribution centers is for the addition of kilovars that are necessary to correct the system to the desired pf, recognizing that, at times, not all pf improvement is carried out by capacitors at motor circuits. This type of installation can be justified when a large number of motors are supplied, inhibiting the purchase of individual capacitors on each feeder. Or, simply, when the economic study reveals this arrangement as a preferred alternative. Outdoor rack mounted, indoor metal clad, or vault located capacitors are available for this application.

Capacitor Release

The kVA loading of electrical apparatus is represented in Fig. 5 as the vector sum of the kW and kVAR power requirements. By reducing the reactive power demand on the source, the length of the kVA vector becomes smaller. Therefore, additional kW of load can be added without exceeding the original kVA demand. In other words, new loads can be installed utilizing the existing equipment capacity. Shunt-connected capacitors reduce the reactive power demand and can be used to relieve overloaded transformers, cables or other equipment.

The capacitor kVAR required to accommodate a new load and increasing the pf to .92 without exceeding the circuit capability can be computed as follows:

$$CkVAR = \sqrt{(kVA_2)^2-(kW_2)^2} - \sqrt{(kVA_1)^2-(kW_2)^2}$$

Where subscript 2 indicates the total new circuit kW and kVA, and subscript 1 indicates the circuit capability.

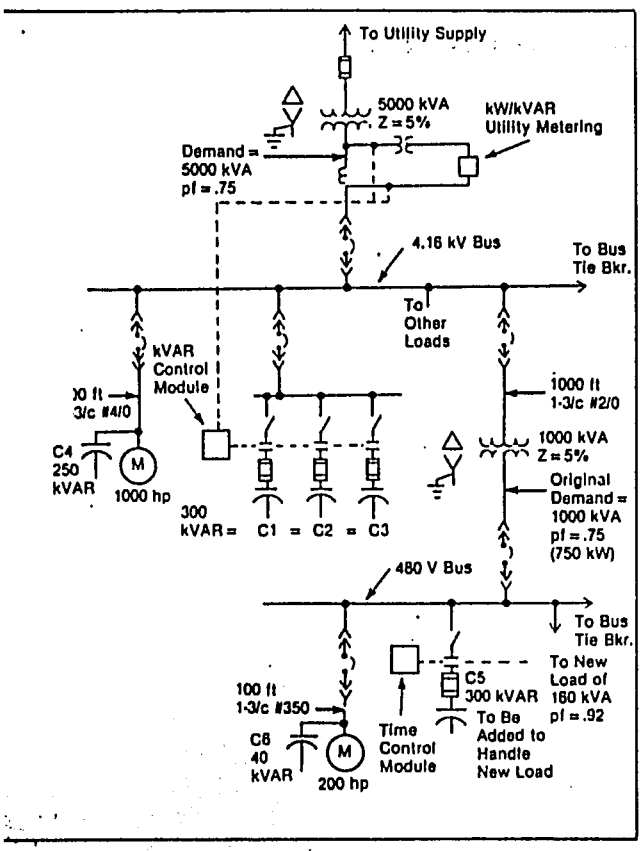

For example, if 180 kVA of new load is expected at the 480 V bus in Fig. 6, prevention of overload equipment requires:

$$CkVAR = \sqrt{(1153)^2-(915)^2} - \sqrt{(1000)^2-(915)^2} = 298$$

Where 1153 equals the existing kVA of 973 plus the new load of 180 kVA. The 1000 kVA equals the circuit capability and the 915 kW equals 750 kW plus the new load of 180 kVA at .92 pf which equals 750 kW + (180)(.92) kW = 750 + 165 = 915 kW.

Since 298 kVAR does not correspond to a standard capacitor rating, choose one 300 kVAR bank. As there already is one 40 kVAR capacitor on this circuit, the total amount of capacitor rating equals 340 kVAR.

For another way to determine the capacitor kVAR rating for improvement of the circuit power factor, refer to Fig. 7. The circuit kW is multiplied by the appropriate factor read from the table. For example, to correct from 75% to 92% with 750 kW of load, find .453, then (750)(.453) = 340 kVAR.

Automatic Switching

Capacitors are available in single and multi-step banks. Consideration should be given for connecting them to automatic controllers governed by parameters of time, voltage, or kilovars (see Fig. 8). The choice of control depends on the cyclical nature of the load. In Fig. 6, capacitors C1, C2, C3 and C5 are connected to control modules. Time-switched capacitors may be fitted to the base load kVAR. When this is done; the kVAR control module automatically matches capacitor loading to the varying inductive loads. The capacitor banks can be purchased complete with the controller, fuses, load break switch, potential and current transformers.

The design tool used for selection of automatic switching is the load kVAR profile, an example of which is shown in Fig. 9. The profile is developed from the time-charted data of kVAR flow and adjusted for motor capacitors added.

A greater degree of flexibility is achieved using steps of kVAR switched into the system. The point of diminishing return is reached when the cost of an additional step to the capacitor bank outweighs the advantage of correcting to the desired power factor for a given load.

For plant load cycles that result in a fairly constant profile of kVAR versus time, fewer increments of kVAR switched would be sufficient to correct the power factor at peak load and some value at partial peak. The size and number of steps are tailored to the kVAR profile so that each plateau corrects the power factor to a value no greater than the desired level while attempting to minimize the number of steps and the difference between desired and actual power factor.

Economic Study

An expenditure for power factor improvement will produce future income from the savings in energy, peak kW, and power factor penalty charges. An economic study will provide the payback period for a given investment, or determine the permissible purchase cost for a given payback period. In the example below, a dollar value for the installed cost of capacitors is calculated assuming a three-year payback period, annual utility rate increases of 12% and a stipulated rate of return of 15%. Taxation benefits are not considered making this study a conservative one. For this example, please refer to the single-line diagram of Fig. 6,

Fig. 6. A one-line diagram of a hypothetical electrical system. The data given is used in a number of examples presented in the article.

233

the utility rate structure of Fig. 2, and the cash flow diagram in Fig. 10.

Given:

peak kW = 3750
power factor = .75
load factor = .5
kW circuit losses = 27

Proposed:

power factor = .92
capacitor kVAR = 1715
capacitor losses = (1715 kVAR)(0.5 W/kVAR)
= 857.5 W
= .858 kW

Monthly Savings with Capacitors:

■ Determination of percent loss reduction (%LR)

$$\%LR = (100)\left[1-\left(\frac{\text{old pf}}{\text{new pf}}\right)^2\right] = (100)\left[1-\left(\frac{.75}{.92}\right)^2\right] = 33.5\%$$

■ Reduction In Demand Charge (RDC)

RDC = [(kW loss)(%LR)–capacitor loss](demand charge)
RDC = [(27)(.335)–.858]($5/kW) = $41

■ Reduction In Energy Charge

REC = [(kW loss)(%LR)–capacitor loss](720 hr/mo)(load factor)(rate)
REC = [(27)(.335)–.858](720)(.5)($.07/kWh) = $206

■ Power Factor Penalty Elimination (PFPE). This represents the elimination of low pf penalty charges by increasing the pf from the original low value to a value up to or exceeding the utility break-even value of .85 pf and is based on a 1% decrease in demand charge for each pf percentage improvement up to .85 pf.

PFPE = (.85–original pf value)(peak kW)(demand charge)
PFPE = (.85–.75)(3750)($5/kW) = $1875

■ Power Factor Improvement Bonuses (PFIB). This is the utility's incentive for a customer to further enhance his pf improvement beyond the .85 pf break-even point and is based upon a bonus of 1% of the demand charge for each pf percentage improvement beyond the utility .85 pf break-even point. Because the peak kW will decrease with pf improvement, this change must be taken into account. The reduction in peak kW demand equals (kW losses)(% loss reduction) less capacitor loss = (27)(.335)–.858 = 8 kW

PFIB = [(improved pf value–.85)(original peak kW –reduction in kW demand)](demand charge)
PFIB = (.92–.85)(3750–8)($5/kW) = $1309

1st year monthly savings = $41 + $206 + $1875 + $1309 = $3431
2nd year monthly savings = $3431 × 12% rate increase = $3843
3rd year monthly savings = $3843 × 12% rate increase = $4304

DESIRED POWER FACTOR IN PERCENT

ORIGINAL POWER FACTOR IN PERCENT	80	81	82	83	84	85	86	87	88	89	90	91	92	93	94	95	96	97	98	99	100
50	0.982	1.008	1.034	1.060	1.086	1.112	1.139	1.165	1.192	1.220	1.248	1.276	1.306	1.337	1.369	1.403	1.442	1.481	1.529	1.590	1.732
51	.937	.962	.989	1.015	1.041	1.067	1.094	1.120	1.147	1.175	1.203	1.231	1.261	1.292	1.324	1.358	1.395	1.436	1.484	1.544	1.687
52	.893	.919	.945	.971	.997	1.023	1.050	1.076	1.103	1.131	1.159	1.187	1.217	1.248	1.280	1.314	1.351	1.392	1.440	1.500	1.643
53	.850	.876	.902	.928	.954	.980	1.007	1.033	1.060	1.088	1.116	1.144	1.174	1.205	1.237	1.271	1.308	1.349	1.397	1.457	1.600
54	.809	.835	.861	.887	.913	.939	.966	.992	1.019	1.047	1.075	1.103	1.133	1.164	1.196	1.230	1.267	1.308	1.358	1.416	1.559
55	.769	.795	.821	.847	.873	.899	.926	.952	.979	1.007	1.035	1.063	1.090	1.124	1.156	1.190	1.228	1.268	1.316	1.377	1.519
56	.730	.756	.782	.808	.834	.860	.887	.913	.940	.968	.996	1.024	1.051	1.085	1.117	1.151	1.189	1.229	1.277	1.338	1.480
57	.692	.718	.744	.770	.796	.822	.849	.875	.902	.930	.958	.986	1.013	1.047	1.079	1.113	1.151	1.191	1.239	1.300	1.442
58	.655	.681	.707	.733	.759	.785	.812	.838	.865	.893	.921	.949	.976	1.010	1.042	1.076	1.114	1.154	1.202	1.263	1.405
59	.618	.644	.670	.696	.722	.748	.775	.801	.828	.856	.884	.912	.939	.973	1.005	1.039	1.077	1.117	1.165	1.228	1.368
60	.584	.610	.636	.662	.688	.714	.741	.767	.794	.822	.850	.878	.905	.939	.971	1.005	1.043	1.083	1.131	1.192	1.334
61	.549	.575	.601	.627	.653	.679	.706	.732	.759	.787	.815	.843	.870	.904	.936	.970	1.008	1.048	1.096	1.157	1.299
62	.515	.541	.567	.593	.619	.645	.672	.698	.725	.753	.781	.809	.836	.870	.902	.936	.974	1.014	1.062	1.123	1.265
63	.483	.509	.535	.561	.587	.613	.640	.666	.693	.721	.749	.777	.804	.838	.870	.904	.942	.982	1.030	1.091	1.233
64	.450	.476	.502	.528	.554	.580	.607	.633	.660	.688	.716	.744	.771	.805	.837	.871	.909	.949	.997	1.058	1.200
65	.419	.445	.471	.497	.523	.549	.576	.602	.629	.657	.685	.713	.740	.774	.806	.840	.878	.918	.966	1.027	1.169
66	.388	.414	.440	.466	.492	.518	.545	.571	.598	.626	.554	.682	.709	.743	.775	.809	.847	.887	.935	.996	1.138
67	.358	.384	.410	.436	.462	.488	.515	.541	.568	.596	.624	.652	.679	.713	.745	.779	.817	.857	.905	.966	1.108
68	.329	.355	.381	.407	.433	.459	.486	.512	.539	.567	.595	.623	.650	.684	.716	.750	.788	.828	.876	.937	1.079
69	.299	.325	.351	.377	.403	.429	.456	.482	.509	.537	.565	.593	.620	.654	.686	.720	.758	.798	.840	.907	1.049
70	.270	.298	.322	.348	.374	.400	.427	.453	.480	.508	.536	.564	.591	.625	.657	.691	.729	.769	.811	.876	1.020
71	.242	.268	.294	.320	.346	.372	.399	.425	.452	.480	.508	.536	.563	.597	.629	.663	.701	.741	.783	.850	.992
72	.213	.239	.265	.291	.317	.343	.370	.396	.423	.451	.479	.507	.534	.568	.600	.634	.672	.712	.754	.821	.963
73	.186	.212	.238	.264	.290	.316	.343	.369	.396	.424	.452	.480	.507	.541	.573	.507	.645	.685	.727	.794	.936
74	.159	.185	.211	.237	.263	.289	.316	.342	.369	.397	.425	.453	.480	.514	.546	.580	.618	.558	.700	.767	.909
75	.132	.158	.184	.210	.236	.262	.289	.315	.342	.370	.398	.426	.453	.487	.519	.553	.591	.631	.673	.740	.882
76	.105	.131	.157	.183	.209	.235	.262	.288	.315	.343	.371	.399	.426	.460	.492	.526	.564	.604	.652	.713	.855
77	.079	.105	.131	.157	.183	.209	.236	.262	.289	.317	.345	.373	.400	.434	.466	.500	.536	.578	.620	.687	.829
78	.053	.079	.105	.131	.157	.183	.210	.236	.263	.291	.319	.347	.374	.408	.440	.474	.512	.552	.594	.661	.803
79	.026	.052	.078	.104	.130	.156	.183	.209	.236	.264	.292	.320	.347	.381	.413	.447	.485	.525	.567	.634	.776
80	.000	.026	.052	.078	.104	.130	.157	.183	.210	.238	.266	.294	.321	.355	.387	.421	.459	.499	.541	.608	.750
81	...	.000	.026	.052	.078	.104	.131	.157	.184	.212	.240	.268	.295	.329	.361	.395	.433	.473	.515	.582	.724
82	...	...	.000	.026	.052	.078	.105	.131	.158	.186	.214	.242	.269	.303	.335	.369	.407	.447	.489	.556	.698
83	...	...	...	.000	.026	.052	.079	.105	.132	.160	.188	.216	.243	.277	.309	.343	.381	.421	.463	.530	.672
84	...	...	...	...	.000	.026	.053	.079	.106	.134	.162	.190	.217	.251	.283	.317	.355	.395	.437	.504	.645
85	...	...	...	...	...	.000	.027	.053	.080	.108	.136	.164	.191	.225	.257	.291	.329	.369	.417	.478	.620
86	...	...	...	...	...	...	...	.026	.053	.081	.109	.137	.167	.198	.230	.265	.301	.343	.390	.451	.593
87	...	...	...	...	...	...	...	...	.027	.055	.082	.111	.141	.172	.204	.238	.275	.317	.364	.425	.567
88	...	...	...	...	...	...	...	...	...	.028	.056	.084	.114	.145	.177	.211	.248	.290	.337	.398	.540
89	...	...	...	...	...	...	...	...	...	...	.028	.056	.086	.117	.149	.183	.220	.262	.309	.370	.512
90	...	...	...	...	...	...	...	...	...	...	...	.028	.058	.089	.121	.155	.192	.234	.281	.342	.484
91	...	...	...	...	...	...	...	...	...	...	...	...	.030	.061	.093	.127	.164	.206	.253	.314	.456
92	...	...	...	...	...	...	...	...	...	...	...	...	...	.031	.063	.097	.134	.176	.223	.284	.426
93	...	...	...	...	...	...	...	...	...	...	...	...	...	...	.032	.066	.103	.145	.192	.253	.395
94	...	...	...	...	...	...	...	...	...	...	...	...	...	...	...	.034	.071	.113	.160	.221	.363
95	...	...	...	...	...	...	...	...	...	...	...	...	...	...	...	...	.037	.079	.126	.187	.328
96	...	...	...	...	...	...	...	...	...	...	...	...	...	...	...	...	...	.042	.089	.150	.292
97	...	...	...	...	...	...	...	...	...	...	...	...	...	...	...	...	...	...	.047	.108	.251
98	...	...	...	...	...	...	...	...	...	...	...	...	...	...	...	...	...	...	...	.061	.203
99	...	...	...	...	...	...	...	...	...	...	...	...	...	...	...	...	...	...	...	...	.142

Fig. 7. Power-factor multiplier to determine the kVARs needed to correct a low pf. The multiplier is found at the intersection of the original pf and desired pf. This number multiplied by the kW equals the amount of kVARs required to increase the existing pf to the desired pf.

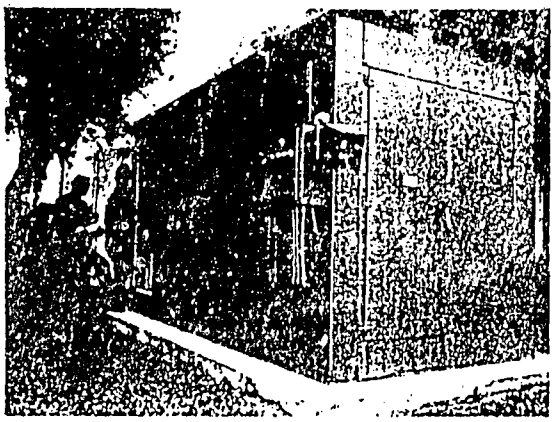

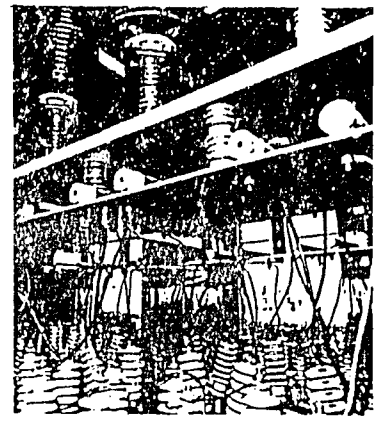

Fig. 8 An automatic power factor control unit. The far left photo shows the cabinet and the adjacent photo looks into the interior where the capacitors, oil switches and current limiting reactors are shown. Photos courtesy of H.K. Porter Co., Inc. Electrical Div.

Economic Study

A cash flow diagram, prepared for the calculation of the present value of future savings, or for the amount which can be invested in capacitors, is shown in Fig. 10. The present worth factors for the series of positive cash flow are 11.08, 20.62 and 28.85, for the first, second and third series.

The present value of this future savings equals (11.08)($3431) + (20.62-11.08)($3843) + (28.85-20.62)($4304) =$110,100

A lesser expenditure will produce a smaller payback period, or a greater rate of return for the same period. A lower stipulated rate of return will allow for a greater initial investment for the same payback period. For a longer payback, a greater investment can be tolerated, with a constant rate of return.

Harmonics And Resonance

A system study of harmonic effects and resonance will protect against misapplication of capacitors. Some sources of harmonic voltages include transformers, static switching power supplies (UPS systems, variable speed drives) and generators. A measurement of harmonic voltages can be obtained with a frequency spectrum analyzer.

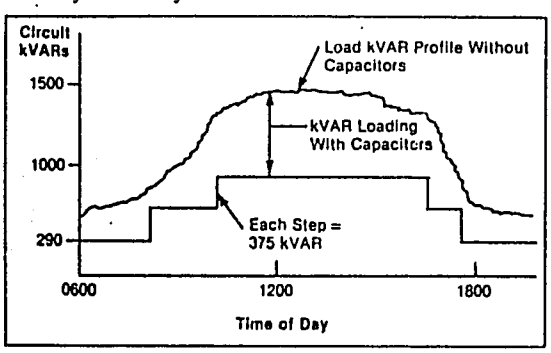

Fig. 9. Load kVAR profile with power factor correction using a multi-step capacitor bank. In the above plot, a peak demand of 2500 kW is corrected to .92 from .75 pf.

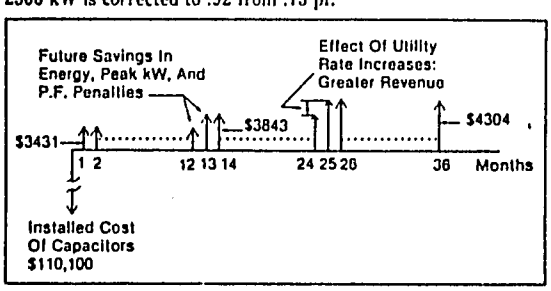

Fig. 10. Cash flow diagram showing the present value of future savings that can be invested in capacitors to improve the power factor to .92 in the circuit shown in Fig. 6.

Capacitors do not generate harmonics; however, they act as a reactance which varies with frequency by $X=[1/(2\pi fC)](j)$ where j is a phasor operator. Higher order harmonics produce proportionally greater currents in the capacitor because of the lower impedance.

Capacitors are rated to carry 135% of the nameplate kVAR to include the effect of harmonics and operating voltage. The percentage of nameplate kVARs actually drawn by the capacitor bank can be calculated as follows:

$$kVARs=(V_1)^2 + 3(V_3)^2 + 5(V_5)^2 + \ldots$$

where V_1, V_3, and V_5 are the fundamental, third and fifth harmonic voltages expressed as a fraction of the rated voltage.

The total rms current is equal to the square root of the sum of the squares of the harmonic currents:

$$I_{rms}total=\sqrt{(I_{1,rms})^2 + (I_{3,rms})^2 + (I_{5,rms})^2 + \ldots}$$

Higher harmonics do occur and can be analyzed. The following example will be limited to the fifth harmonic. Suppose the system voltage data at C5 in Fig. 6 indicates a fundamental of 103%, a third harmonic of 25% and a fifth harmonic of 5% of rated voltage. Then the kVAR loading is $(1.03)^2 + 3 \times (.25)^2 + 5 \times (.05)^2 = 1.26$ or 126% of the rated kilovars. In calculating the total rms current using:

$$I=\frac{E}{Z},$$

E is the harmonic voltage and Z is the impedance of the capacitor at the harmonic frequency. The impedance decreases proportionally with increasing harmonic frequency. Thus, for the third harmonic, we have a harmonic voltage of .25 per unit (pu) divided by the impedance, which is one-third that of the first harmonic, hence the current becomes:

$$\frac{.25}{1/3}=.75 \text{ pu.}$$

On this basis the total rms current is:

$$\sqrt{(1.03)^2 + (.75)^2 + (.25)^2}=1.30$$

or 130% of rated current.

The above example illustrates the necessity of sizing switches, cables and fusing of the capacitor installation for

(continued on page 54)

225

Applying Capacitors
(continued from page 18)

125% of rated current as required by the NEC. Ratings of equipment between the source and the capacitor bank should be checked for adequate capability to carry the total current *including* harmonics, if present. Also, it is important that the relay settings for the circuit breakers be checked so that the breakers can ride through the calculated inrush current at the high frequency. If this matter is not addressed, nuisance tripping may occur.

Any combination of inductance and capacitance has a characteristic frequency at which there exists an oscillation of energy, called resonance, reactive in nature, that shuttles between the electrical equipment. For a known inductance L, and capacitance C, the frequency that may trigger this phenomenon is equal to:

$$\frac{1}{2\pi\sqrt{LC}}$$

This oscillatory condition, if not alleviated, results in large current values and overvoltages in the power system. When the characteristic harmonic voltage exists, and in sufficient magnitude, the oscillating current will depend on the circuit time constant. These currents can fatally damage capacitors, overload equipment or, at best, open circuit fuses.

Resonant shunts, consisting of a reactor and capacitor in series, with the combination in parallel with the circuit, can be effective in trapping the harmonic currents, thereby eliminating oscillation within the power system. Usually the exchange of energy is between the customer's capacitors and the low pf devices.

Conclusion

Power capacitors can frequently offer benefits for an industrial/commercial facility. They are available in various ratings and can be connected to control systems to closely follow the power factor performance of an electrical system. Before installing capacitors, an economic analysis should be carried out to justify their installation. Planning for a capacitor installation requires a check on equipment ratings, protective device settings, harmonics and resonance effects. ■

The Author

Joseph W. Fay is a project engineer with Syska & Hennessy, consulting engineers (San Francisco office). He specializes in electrical engineering for commercial and light industrial projects. Fay has a BSEE degree from the University of Illinois at Urbana-Champaign and is a Registered Professional Engineer in California. He is a member of IEEE and IES.

AVOID...
...HIGH ELECTRIC COSTS
...PENALTY ELECTRICAL CHARGES
...LIMITED SYSTEM CAPACITY
...VOLTAGE FLUCTUATIONS

INSTALL...
AEROVOX POWER FACTOR CORRECTION CAPACITORS

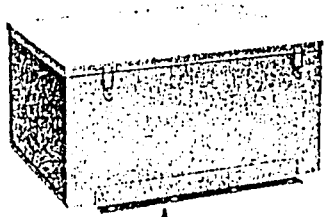

Specifically engineered for low voltage industrial applications, AeroVar power factor correction capacitors will reduce electrical energy costs and increase electrical system capacity. You'll save valuable dollars by eliminating penalty charges and premium demand rates.

AeroVar power factor correction capacitors feature a metallized film dielectric system for greater energy efficiency, lower operating temperatures and extended life. Supplied in heavy gauge steel enclosures in ratings from 5 to 150 KVAR at 240, 480 and 600 volts, 3 phase, 60 Hz. U.L. listed and CSA Approved.

Send for new AeroVar catalog.

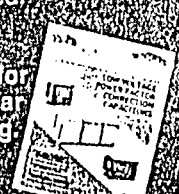

AEROVOX INCORPORATED
AN AVX COMPANY
NEW BEDFORD, MASS. 02744

Inquiry 24

Forensic Engineering
(continued from page 46)

not protecting the electrician from such a shock. It was noted that if there had been the proper green bonding wire with the temporary wiring, the accident would most likely not have happened.

An executive of the ballast company who attended certain of the courtroom hearings realized that the paper and foil condenser was from a vendor whose products were purchased by the ballast manufacturer. Interestingly, the attorneys who defended the ballast manufacturer then hired a member of our company to carry the case on to the manufacturer of the paper and foil condenser that was used within the ballast. The case was a second job for our company, and the second case did go to court, and a settlement was made in the courtroom.

Conclusion

Attorneys are important people. They synthesize the knowledge and information given to them, and frequently seek this knowledge from outside consultants. Attorneys will respect you for soliciting the help of other experts when necessary. They do not expect you to know all of the answers all of the time. There will be times when you think the case is unfair — and you can back out. Many of the attorneys in such cases have called us back on other cases. You won't need to be either young or old to participate in forensic electrical engineering. Our experience in this area runs over 30 years and we have found the work interesting and profitable. ■

References:

Harry M. Philo, *Lawyers Desk Reference*, 6th Ed., Bancroft-Whitney Co., San Francisco. 1979.

1980 Forensic Service Directory: The National Register of Forensic Experts, Litigation Consultants and Legal Support Specialists. Fairlawn, NJ. National Forensic Center. 1980.

Manual of Practice for Forensic Laboratories, American Council of Independent Laboratories, Inc., Washington, D.C. 1982.

The Author

Scott Beamer heads his own consulting engineering firm in Oakland, CA. He received a BSEE degree from the University of California in Berkeley, and is a Registered Professional Engineer in several states. Beamer is a member of IEEE, IES, the American Arbitration Assoc. and has served as chairman of the Council of East Bay (San Francisco) Electrical Engineers. He has taught various engineering courses and has 32 years of experience.

236

The Best Of Capacitor Installations Can Have Side Effects

Avoiding troubles from surges and resonance

When capacitors are used to improve power factor on ac circuits, there can be side effects. In some cases, the capacitors are the victims; in others, they are part of the cause. In either case, the electrical consultant should be aware of the possibilities and take necessary steps to prevent damage from surges and from continuous harmonics. Both these effects are of growing importance because of increased application of chopped-wave equipment—especially silicon-controlled rectifier (SCR) drives.

By Myron Zucker, P.E.,
President, and
Lewis M. Clark, Production Manager,
Myron Zucker, Inc.

Although it rarely happens, major damage can be caused by transients produced by false triggering of devices such as controls and computers, fuse blowing, breakdown of insulation and other malfunctioning in transformers, switchgear, motors and capacitors.

These events can be made worse by resonance, matching the circuit inductance and capacitance to the frequency of the pulses so that they are amplified over certain parts of the system. Resonance can not only make things worse by creating unusually high voltages and currents, compounding the problems of transients, but can also add overheating of lines and equipment by the addition of resonant current to a 60 Hz system.

Glimmers of electrical problems appeared as far back as the 1930s, when medical x-ray machines caused disturbances in power lines from which they were fed. In the 1940s additional line disturbances from large spot welders and flash welders brought the flicker problems to the attention of electrical engineers. Lighting, television se and the welding apparatus itself we afflicted by the surges.

In those days, problems were fe and large enough so that each o could be solved by individual enginee ing attention. Arc furnaces, large re tifiers and high horsepower inductio motors created surges, and this equi ment was sometimes involved in res nant combinations.

Rectifiers Alter Conditions

The surge/harmonic syndrome b came more common in the 1960s wi the spreading of chopped-wave equi ment (that allows only a portion each half-cycle of voltage to g through to the load). Ignitrons an saturable reactors also caused prol lems and, nowadays, rectifier systen such as SCRs are used with increasin frequency and are a major cause creating surge and resonance difficu ties. Power line noise troubles were e countered even without power capac tors. False operation of equipmen cross-currents, voltage distortio both high and low, and overcurren were experienced.

Now in the '80s, power-distortin equipment is becoming even more con mon. More efficient and cheaper soli state phase-controlled switches, suc as SCRs, are widely used for contro ling and/or providing power to motors, ac motors (both constant an variable speed), furnaces (both indu tive and resistive), and uninterruptib power supply (UPS) systems. And, re

(continued on page 2

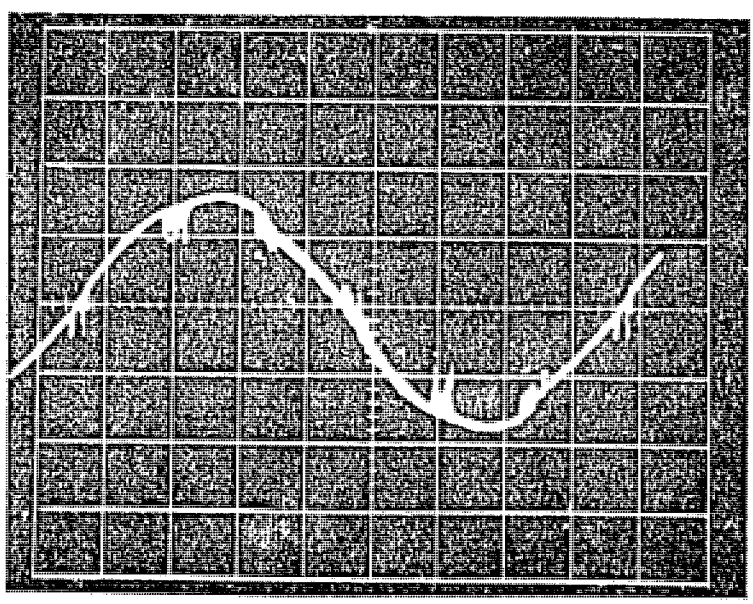

Photo courtesy of Myron Zucker, Inc.

Fig. 1. Line voltage transients (spikes) cause by commutation of an SCR unit powering a 400 hp dc motor. The system is fed from a 2000 kVA substation.

237

Capacitor Installations

(continued from page 24)

tifier firing circuits create problems of surges and harmonics.

It should be recognized that rectifier equipment not only distorts wave shapes; this equipment also frequently lowers pf, sometimes substantially, thus creating the need for pf correction, which is done by the installation of capacitors. However, capacitors may cause resonant problems. It is important to switch capacitors off a line during periods of light loading.

Recognizing that the above electrical problems are increasing, emphasis should be placed on analyzing a project's circuit characteristics, looking for possible resonances that can increase overvoltages and overcurrents. It does not mean that every installation is full of problems; it simply means that there are possible causes for concern that the electrical consultant should watch out for.

Circuit Analysis

There are three distinct phenomena that should be evaluated in a circuit analysis. First, there are transients caused by one form or another of switching. Rectifiers and inverters are in effect a complex series of switching circuits that primarily use solid-state devices. They take current first from one line of an ac power circuit and then from the next and so on—feeding each in turn to the same output wires, with the output being dc. Each time that the primary current is transferred from one wire to the next, the two wires are essentially short-circuited. The short circuit lasts only a fraction of a second, but this is what creates spikes and notches in the supply line voltage (see Fig. 1). These surges are the basis of all the ills listed at the start of this article.

A second phenomenon is that the rectifier itself is affected while providing a reasonably unvarying dc. This requires that the ac lines provide not only 60 Hz current to the load, but also continuous harmonics which, when put through the rectifier circuitry, come out as a nearly flat dc. This, in turn, affects the ac primary power source.

The third phenomenon is a combination of inductance (L) and capacitance (C), of which each circuit has definite amounts (regardless of discrete capacitor equipment), which can create resonance and enlarge voltage and current by many times (see Fig. 2). The electrical consultant's job is to locate and correct the conditions that can create excessive currents and voltages.

Of the above aspects, resonance and harmonics lend themselves to measurement by computation.

Trouble Spots

In the typical factory or office building, a moderate amount of SCRs will cause little trouble. However, conditions that may cause problems and should be investigated are:

- A few SCR drives that are large in relation to the power system. For instance, if there are one or two drives whose loads amount to about 40% of the transformer kVA feeding them, the commutating spikes may readily blow capacitor fuses and possibly puncture capacitor insulation.
- Rectifiers usually operating at great (more than 50%) retardation. Watch frequently switched capacitors, especially those in large banks, whether switched all at once, or in small steps.
- SCR drives that draw more load than the other equipment on the same low-voltage line.
- Capacitors that bring power factor above 90% at full load, especially if remaining on the line at light load.
- Capacitor kVAR greater than 25% of the transformer kVA feeding it.

Spikes

Spikes seem to cause fuse blowing more often than do harmonics. To explain this, consider the capacitor "device" fuse connected to each capacitor. This is a fast-acting, current-limiting fuse (as distinguished from a slow-blowing circuit fuse), and it acts as an isolator to take a capacitor off the line the instant it develops a short circuit. Speed is important to prevent case rupture, and device fuses have an excellent record in providing such protection.

But the fuse is nervous. Fuses of relatively small I^2t (a few thousand amperes^2 seconds) capability, as used with the now prevalent unit cell construction, will be blown by spikes.

So fuse amperage has to be chosen carefully. In the days of good sine waves, conventional rules were satisfactory. A fuse rating of 1.67 times steady-state current allowed margin for the normal variations in capacitor current: up to 1.35 times rated kVAR, computed by the factors of 1.15 times rated microfarads, 1.1 times rated

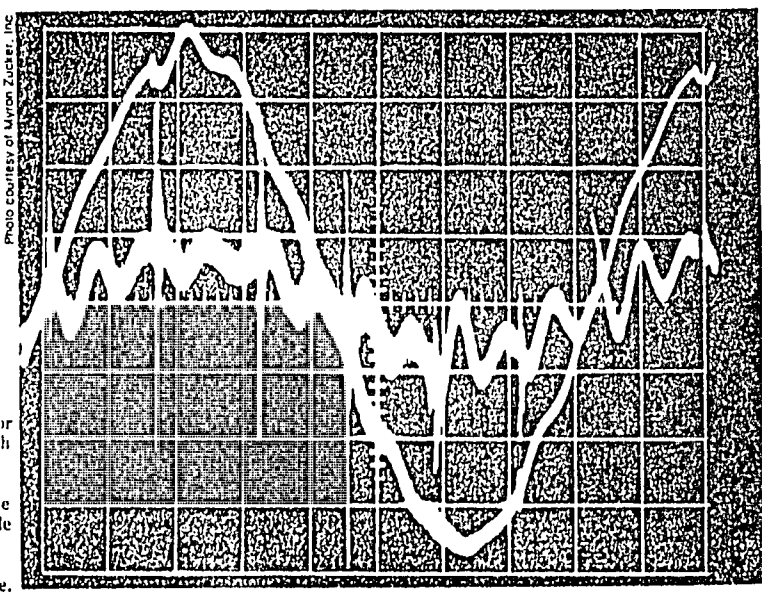

Photo courtesy of Myron Zucker, Inc.

Fig. 2. Photo of a CRT monitoring the line voltage and current at a 130 kVAR capacitor installation. The equipment is in a plant with a 300 hp, SCR powered motor on a 200 ft bus, fed from a 1000 kVA substation. This picture shows the spikes in the current wave (the low amplitude wave—the high amplitude wave is the voltage) that are providing the excitation to a resonant circuit. The 11th harmonic is clearly seen in the current wave.

238

McGRAW-EDISON

Electrical Apparatus Sales Representatives

Atlantic Region
Foster-McClinton, Inc.
Bridgeville, PA (412) 941-4800
Hurricane, WV (304) 757-6645
Frazier & Company
Richmond, VA (804) 784-4125
Hyland & May Associates
Norwood, MA (617) 762-2485
L. E. Markle Company
North Boston, NY (716) 649-7700
Fairport, NY (716) 223-4820
National Electric Power Agencies
New York, NY (212) 594-3152
Stallings & Associates, MHT, Inc.
Brookhaven, PA (215) 872-3680
Trautmann Associates
Central Valley, NY (914) 928-9431
John E. Wennogle & Associates
Summit, NJ (201) 277-6024
Wilson Associates, Inc.
Baltimore, MD (301) 256-4200

Gulf/Southeast Region
Arkansas Industrial Machinery, Inc.
North Little Rock, AR (501) 758-2745
Memphis, TN (901) 363-2200
Austin Brown Associates, Inc.
Atlanta, GA (404) 457-6381
Pelham, AL (205) 663-4820
Gallaher & Associates, Inc.
Maryville, TN (615) 984-7340
Charles R. Lee Associates, Inc.
Miami, FL (305) 444-7414
Polytech Services, Inc.
Charlotte, NC (704) 372-4161
Schell-Ranna Company, Inc.
Metairie, LA (504) 837-7837
Baton Rouge, LA (504) 291-1655
Clinton, MS (601) 924-7894
Van & Smith Company
Tampa, FL (813) 877-8393
Jacksonville, FL (904) 384-2376
Orlando, FL (305) 898-8520

Mid-West Region
Powertech
Worthington, OH (614) 888-5522
Ohio Watts: (1-800) 282-6010
Lee Butler & Associates, Inc.
Elk Grove Village, IL (312) 437-7600
Antioch, IL (312) 395-0480
Marquette Heights, IL (309) 382-2011
Couchman-Conant, Inc.
Noblesville, IN (317) 849-9890
Cubbedge Controls
Toledo, OH (419) 535-5530
George R. Horne & Company
Dearborn, MI (313) 561-1360
iCi Sales
St. Paul, MN (612) 227-2425
Qualtech Systems, Inc.
Maryland Heights, MO (314) 878-5335
Jerry L. Shumway & Associates, Inc.
Des Moines, IA (515) 285-0704

Pacific Region
Artwel Electric, Inc.
Burlingame, CA (415) 347-9804
Cunningham Company, Inc.
Rosemead, CA (213) 350-1461
A.H. Neal Sales
Phoenix, AZ (602) 254-3113
Stevens Sales Company
Salt Lake City, UT (801) 487-8571
Boise, ID (208) 336-8304
Specialty Products, Inc.
Honolulu, HI (808) 531-0596
J.A. Tudor & Associates, Inc.
Seattle, WA (206) 682-7444
Spokane, WA (509) 327-3328
Eugene, OR (503) 688-1252
Portland, OR (503) 288-5154
Anchorage, AK (907) 243-4641

Plains/Southwest Region
Electrical & Instrument Sales Company
Tulsa, OK (918) 664-0980
Hubert Kaub & Company
Englewood, CO (303) 761-5831
R.E. Martin Sales Agency
Albuquerque, NM (505) 262-2474
George Pearson Company, Inc.
Prairie Village, KS (913) 341-6210
Wichita, KS (316) 265-4791
J.R. Woodruff Company
Houston, TX (713) 467-8483

voltage and 1.06 additional harmonics, which are always present to some degree.

Ragged waves, however, will blow such fuses. In line with recent fuse manufacturers' thoughts, many electrical consultants now consider 2.2 to 2.5 to be the normal multiplier. Some installations go considerably higher. Our firm, which manufactures capacitors, has no reports of cell rupture when such ratings are used.

Spikes may also damage contactors. The nominal limit for spikes, set by makers of the lighting or resistance load contactors, that should be used for power-factor control capacitors by themselves, is six times rated current.

Spike Reduction

The electrical consultant's job is to specify fuses that will operate under normal conditions without jeopardizing the capacitor, the contactor or, even more important, people—or else to call for means to suppress the transients at the capacitor. Spikes can be reduced by the correct amount of inductance or by shunt suppressors (choppers) near the sensitive equipment. Should a line not have sufficient inductance in itself, the line inductance can be supplemented by solenoidal chokes. To obtain optimum results, filters should be applied.

Harmonics

Harmonics lend themselves to a more analytical treatment than spikes in the usual electrical system where potential resonant circuits can usually be well identified.

Remember, that for harmonic currents or voltages to build up, there must be both a *resonant circuit* and *excitation*. If both exist they will create oscillations that can cause trouble from overcurrent or overvoltage. Let's look at the two requirements.

In determining the first criterion for having a resonant circuit, it is important to see if the resonant frequency matches excitation frequency. Resonant frequency depends on the inductance (L) and capacitance (C) of the electric circuit:

$$f = \frac{1}{2\pi\sqrt{LC}}$$

where f is in cycles per second, L is in henries and C in farads.

On new projects, L and C may be found from:

- Transformer impedance (Z) on the nameplate, thus ascertaining the major inductive element in an electrical system.
- Ohms impedance (or the reactance) from textbook values for the electric lines between the transformer and the capacitor.
- Equivalent impedance of the utility system before the transformer, a value usually available either as Z or as short-circuit kVA from the local utility.
- The kVAR rating of capacitors in the circuit being considered. If they are spread over the distribution circuit, a first approximation may be made by considering them all located at a load center.

Power Factor Improvement

When improving the power factor of an existing plant, it is helpful to make field tests to determine the reactance of the system by projecting back from known capacitance and by observing the frequency of oscillation as some excitation is applied to the circuit. An oscilloscope, preferably with a retentive screen, will be useful to read the frequency. The resulting oscillogram will provide a recording of line conditions. There is noticeable variation in waves in most plants which makes the use of harmonic analyzer scopes, while convenient, somewhat questionable because the amplitude of one harmonic (e.g., the 11th) relative to the 5th, may have changed by the time it is scanned.

An interesting phenomenon is that, in actual practice, the resonance is usually between 300 and 750 Hz, the range in which the possibility of oscillation related to solid-state rectification devices is greatest and gives the worst consequences.

More specifically, for a circuit having a 5.7% Z transformer (a common value) and a capacitor kVAR rating of about 25% of transformer kVA rating, f (resonant frequency) = 450 to 500 Hz. Using other capacitor kVAR/transformer kVA ratios, the following frequencies are obtained:

30% ratio, f = 400 to 450 Hz
40% ratio, f = 350 to 400 Hz

The resonant frequency of electrical systems is likely to decrease as solid-state rectification devices become more economical and proliferate on smaller, weaker systems. It is important for the electrical consultant to be alert against harmonics when small 240/480 V and 240/208 V transformers feed SCR loads.

The second criterion needed for a harmonic problem to exist is having an excitation frequency matching the circuit's natural frequency. And, not only is the rate of excitation important, but also the amplitude, which must be large enough to exceed circuit losses. To determine an electrical system's high frequency excitation, an investigation should be made of the loads, especially rectification devices.

When evaluating a rectifier's har-

239

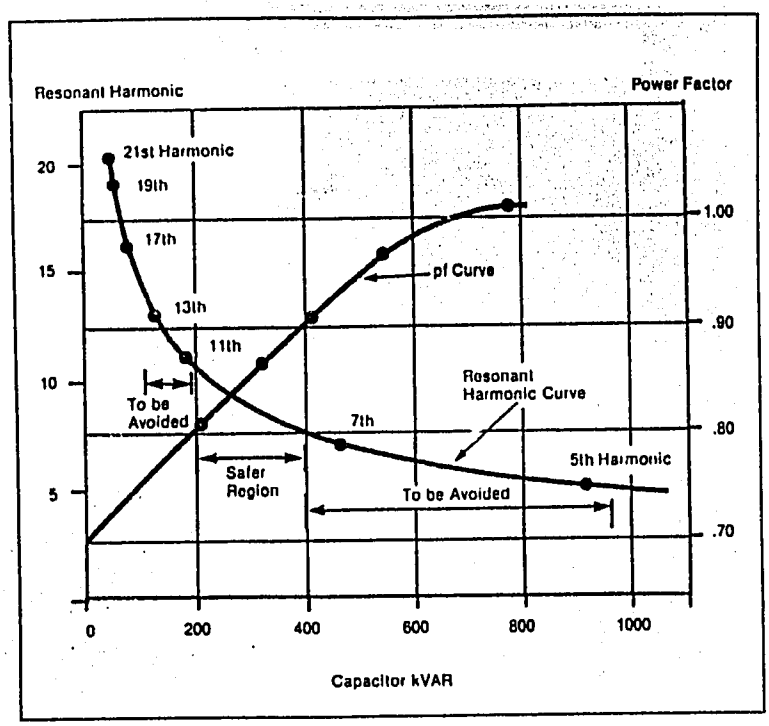

Fig. 3. Chart showing resonant frequency vs. amount of capacitance (blue curve) in a circuit fed from a 1500 kVA substation with a 1000 A, 200 ft bus with reactors. Also shown are the resonant harmonic frequencies that should be avoided. The red curve shows how pf is improved as capacitance is increased. At times a compromise must be made between pf improvement and exposure to harmonics.

monic excitation, it will be noted that usually the 5th, 7th, 11th and 13th harmonics are affected. These harmonics have frequencies of 300, 420, 660 and 720 Hz respectively and are the primary problem frequencies. The 9th harmonic is absorbed by delta connected equipment. In our experience, there is little chance of harmonic problems if the system resonates at 660 Hz (11th harmonic) or higher.

With oversimplification, the rectifier will create square waves of current on the 60 Hz system. The amplitude of each harmonic is related to the inverse of the frequency (i.e., the 5th is greatest, 7th less, and so on up through even higher values than those mentioned, but those values are in such small degree that they are usually negligible).

If the generated harmonics coincide with any resonances in the supply circuit, there will be oscillations, and possible trouble. The higher the frequency, the less the excitation energy comes from the rectifying device (unbelievable as it may seem, these units should be considered as a current generator for the harmonics!).

Capacitor Level

The electrical consultant has some options if he finds conditions are favorable for oscillations. One—the most direct—is to limit capacitors to safe levels. This is done by having the capacitor kVAR rating less than 25% of the transformer kVA rating. Another is to start with a minimum amount of capacitors to avoid circuit resonance (see Fig. 3) and then gradually increase the amount until the desired power factor is attained or until there are signs of trouble. This requires careful monitoring.

Another approach to avoiding the critical resonant point is by applying either a little more or a little less than the target amount of capacitance. This may be practical if a system is static—but in a changing system, today's solution may not be tomorrow's.

An effective but expensive option is to use rectifiers in which the ac power is divided into 12 or more circuits before being rectified. This raises the level of harmonic frequency excitation to a range where it can be handled better. This option is economical only for large installations.

Filter Application

A more practical approach is to use filters, or traps, either in large (substation) capacitor banks or in smaller units. A filter can consist simply of a reactor in series with each capacitor, tuned near the lowest expected oscillating frequency. Most commonly this is the 5th harmonic.

These series-resonant filters invite the harmonic currents to stay in the capacitor-rectifier part of the circuit, relieving the electrical power system of the undesired excess resonance while providing a smooth dc to the load.

To trap the 5th harmonic, a reactor of about 4% impedance at 60 Hz is used. This increases the voltage on the capacitor by 5%, which, in view of the increased harmonic current that the capacitor must carry, leads to the recommendation that 600 V capacitors be used on 480 V circuits. Because of the derated capacitors and the addition of reactors, the cost increase must be evaluated.

We have found the trapping method to be effective even on small systems, especially when the capacitor-at-the-load philosophy is used with modular trapped capacitors near individual rectifier loads and switched on and off the line with them.

Conclusion

Resonance and spikes may become more common as rectification loads increase in use. The effects of spikes can be mitigated as discussed. Resonance problems can be overcome by judicious selection of ratings for capacitors and traps. Costs must be weighed against benefits. ■

The Authors

Myron Zucker is the proprietor of Myron Zucker Engineering Co., and is president of Myron Zucker, Inc. He obtained an EE degree from Cornell University and an MSEE degree from Union College. Zucker has spent 29 years working on power factor correction while with G.E., Detroit Edison Co., and his own firm. He is a Registered Professional Engineer and is active in IEEE.

Lewis M. Clark is production manager at Myron Zucker Engineering Co. He has been employed by the firm for the past year, working in the areas of marketing and product development. Clark has a background in economics from Cornell University.

240

Power factor and conservation

You may look on PF improvement as a load easer in transformers, generators, and feeders, along with trimming the rate structure and monthly billing. Now consider the sheer practical aspect of energy conservation

Every plant-systems engineer should have a clear picture in his mind of just what power factor means. This is a must, since pf, plant operation and energy economics go hand in hand. "That's fine," you'll say, "but my plant has been running for years and the electrical system appears OK. Why should I start worrying about pf?" Well, pf is important because good power factor means less load on your feeders, better plant voltage, a good-sized dip in your monthly power bill and, if you buy power, probably lower electricity rates from the utility company.

Interested? Of course you're always interested in and on the lookout for ways to cut costs. Your first step is to get a clear picture as to what pf really is. We're not going to cover pf calculations now. For the time being, let's settle for a clear picture of what pf is, in simple terms, and what you can do to improve it in your plant. The saving in power losses—transformers, feeders and generators—can constitute a sizable energy saving.

What pf is. Think of your electric system as one carrying two types of power: useful power (kilowatts), that goes to work pulling your load, and reactive power (kvar) that generates magnetism within induction motors. The only one of the two that drives load on the end of the shaft is the useful power or kilowatts. Nevertheless the generator, transformers and feeders carry both.

You can get a clear picture of this by studying the sketches on the facing page. The mug of beer represents your electrical system. It, too, is made up of two parts; the useful (liquid) beer and the suds.

Beer and pf. Compare the liquid beer with useful power, kilowatts or watts, used to drive the load in your plant. Then compare the froth or suds to the reactive kva flowing through your plant feeders and transformers. Now what is pf? Well, we could say the pf of the mug of beer is the ratio of the useful beer (liquid) to the total volume of the mug.

Let's apply the same definition to your electrical system. Looking at it in the same light, you will find that pf is nothing more than the ratio of the useful power (kilowatts) to the plant's total kva. Translating that, we may say that kva is voltage multiplied by amperes (flowing in a single-phase circuit), divided by 1000.

Coming back to our homely beer-mub analogy, we can readily see that we're much better off with less suds in the beer mug and less reactive power in our electrical system. You can understand this at a glance by just looking at the sketches once again.

Reactive power. For the moment, let's look at electric power flowing between generator and motor as through it were beer. It doesn't take a genius to realize the size of the generator and transformer, as well as the feeder, must be large enough to handle both liquid beer and froth. We're saying that an induction motor needs both froth and liquid beer; this certainly holds true in comparing beer to electricity, since your induction motors need both real power, kilowatts, and reactive power.

Now the froth flowing through the pipe causes loss in the generator, transformers and feeders similar to that caused by the liquid beer. Such is also the case in your electrical system, where the reactive power causes power loss all along the line just as real power does. Pf in your plant is low when there's a lot of froth (kvar) flowing.

What to do. Now the thought might occur to you that it would be wise if we could place a machine next to our motor just to supply the froth. And that is often the way pf is improved in the industrial plant. By supplying the froth from a source other than the original generator, the load on the system is reduced.

Realize that you're not going to improve pf and then buy a smaller generator, transformer and feeder for your plant. What you have already installed will probably remain there. The point is, by improving pf you reduce the reactive power flowing in your system, and wind up with ample electrical room to add additional load without going to bigger feeders and transformers. This is in addition to reduced losses within the generator, transformers and feeders.

We mentioned before that reactive power supplies the magnetism in your induction motors; this also holds for other inductive equipment. Remember that this reactive power is roughly constant between low and full load of an induction motor. Naturally the useful power, kilowatts, drawn by the motor will be much less at low load than at full load. On the other hand, since the reactive power to the motor is practically constant, you can see that pf of the unloaded or lightly loaded motor will be low. In other words, the portion of useful power will be low when compared to total kva drawn.

Over-motoring. This all leads to the first rule for establishing good pf in your plant. And that is, don't "over-motor" when using induction motors.

Of course, the best time to analyze over-motoring is when you select motors. The next thing to remember is a possible rearrangement of induction motors in your plant. Along these same lines, think of the synchronous motor when selecting motors for slow-speed application.

Capacitors. Now for a word about shunt capacitors. They are stationary devices whose main function is to deliver froth or reactive kva to the induction motors and other induction equipment in the plant. These do the job nicely and require little attention in the way of maintenance or operation. Don't overlook the fact that they can be installed practically anywhere without disturbing production.

Synchronous motors. Take another look at the sketches. Remember, there is a big difference between a synchronous motor and a capacitor. The synchronous motor will supply mechanical power output as well as reactive power to induction motors in the plant. In other words, The solution to your problem might be to install a synchronous motor along with smaller induction motors to make up the total shaft horsepower required.

On the other hand, the capacitor is strictly a froth machine. It is tied onto your line to supply this reactive kva to induction motors in the plant. You will have to make a detailed cost study to determine whether the synchronous motor, shunt capacitor or a combination of the two is the best bet in your particular case. ■

241

JOINT ENGINEERING GROUP: OEP/FWUSA
DCF RETURN VS SAVINGS/INVESTMENTS

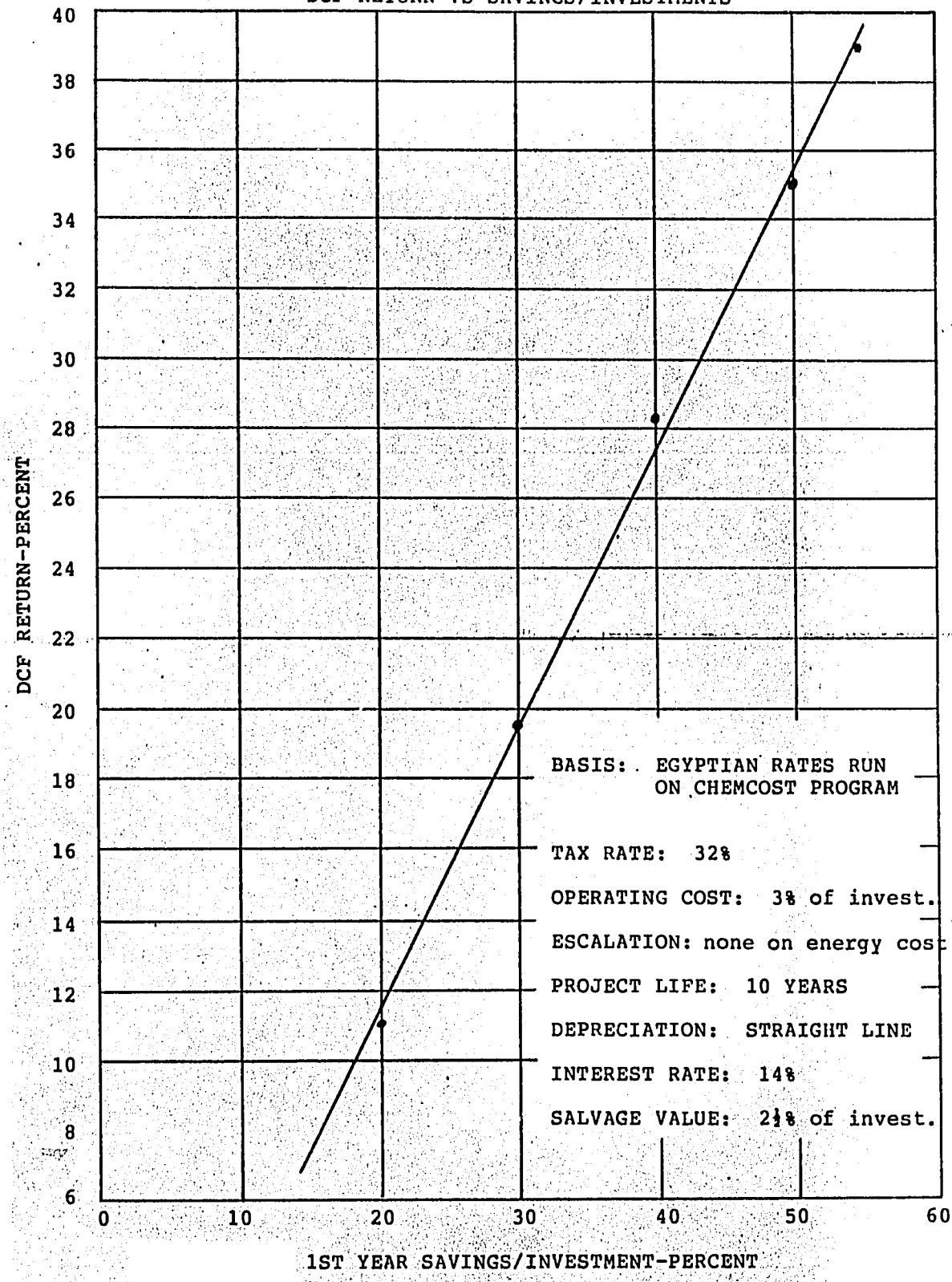

revised 17 Apr 88

242

FLARE GAS RECOVERY IN SHELL CANADA REFINERIES

Gerry D. Allen
and Ron E. Wey
Shell Canada Limited
Toronto, Canada

Henry H. Chan
Shell Canada Limited
Montreal, Canada

ABSTRACT

Two of Shell Canada's refineries have logged about six years total operating experience with modern flare gas recovery facilities. The flare gas recovery systems were designed to recover the normal continuous flare gas flow for use in the refinery fuel gas system. The system consists of liquid knock-out, compression, and liquid seal facilities. Now that the debugging-stage challenges have been dealt with, Shell Canada is more than satisfied with the system performance. A well-thought-out installation can today be safe, trouble-free, and attractive from an economic and environmental viewpoint.

This paper highlights general guidelines for the sizing, design and operation of a refinery flare gas recovery facility.

INTRODUCTION

Every petroleum refinery has a pressure relief and flare system to enable safe handling and disposal of hydrocarbon vapours and liquids. The system loads typically have both continuous and intermittent peaking components. Recovery of the continuous or normal hydrocarbon vapour flows has proven to be economically attractive with both increasing product value and improved system technology. Energy savings equivalent to approximately one to two days of product throughput per year can be recovered and provide approximately a two-year simple payout. Environmental benefits are a bonus.

Pressures on oil refiners to reduce flare emissions intensified during the Seventies. Many of the larger refineries in Europe and North America installed flare gas recovery facilities. For example, Shell plants around the world operate thirty or more such units. In western European countries, flare gas recovery is a long-established part of refinery emission and cost reduction practice. Even for medium-sized plants with capacity in the 9 500 - 14 300 m^3/day range (60-90 000 B/D), it is not uncommon to see a flare gas recovery facility.

In the developing countries, flare gas recovery is rare. Sometimes this occurs because refinery fuel gas supply already exceeds plant needs. In other cases, there have been simply other investment priorities. In very small or simple refineries, say of less than 4800 m^3/day (30 000 B/D) crude capacity, the system cost may be difficult to justify economically.

It appears that some North American refining companies still cling to an old philosophy that flare gas recovery systems are unsafe, unreliable, uneconomic, or unnecessary. Shell Canada's recent experience with two modern systems has proven otherwise.

Two of Shell Canada's oil refineries, at Sarnia (Ontario) and Montreal East (Quebec), have now logged about six years total operating experience with modern flare gas recovery units. The compression facilities in each utilize a two-stage reciprocating machine, one liquid seal drum per flare stack, and an automated load control strategy. The purpose was to recover the normal continuous flow of refinery flare gas for treatment and use in the refinery fuel gas system.

The designer faces some challenging questions: How to determine how much flare gas will be recoverable? How to specify the flow properties for compressor selection? What controls should be incorporated? How much operator and maintenance effort will be required for safe, efficient operation? What kind of process and hardware problems should be watched for?

When considering the economics of the project, the following questions must be addressed. What is it all going to cost? What on-stream factor can reasonably be used in the project economics? Is there a better way, that requires less capital investment? This paper will touch on all these issues.

SYSTEM CONFIGURATION

A schematic of a typical refinery flare gas recovery facility is shown in Figure 1. The facilities include the following pieces of equipment:

— compressor suction drum
— compressor set
— inter-stage knock-out drum
— flare seal drum

A compressor suction drum is provided to knock out liquid droplets before the compressor first stage. As well, the flare line to the compressor should be sloped so that liquids drain away from the machine.

The compressor set is fairly standard. It consists of the compressor and driver, intercooler, after-cooler, and control facilities. A two-stage compressor is required if the recovered gases are to be compressed to pressures in excess of about 65 psig.

Reciprocating compressors have been used frequently in this service. However, screw-type rotary compressors are also being used, particularly in larger capacities.

The inter-stage knock-out drum is provided to knock out condensed liquids from the compressed and cooled gases. It also functions to protect the compressor should the intercooler leak. The collected liquids are drained to a flare header knock-out drum for pumpout or may be pumped out directly.

242

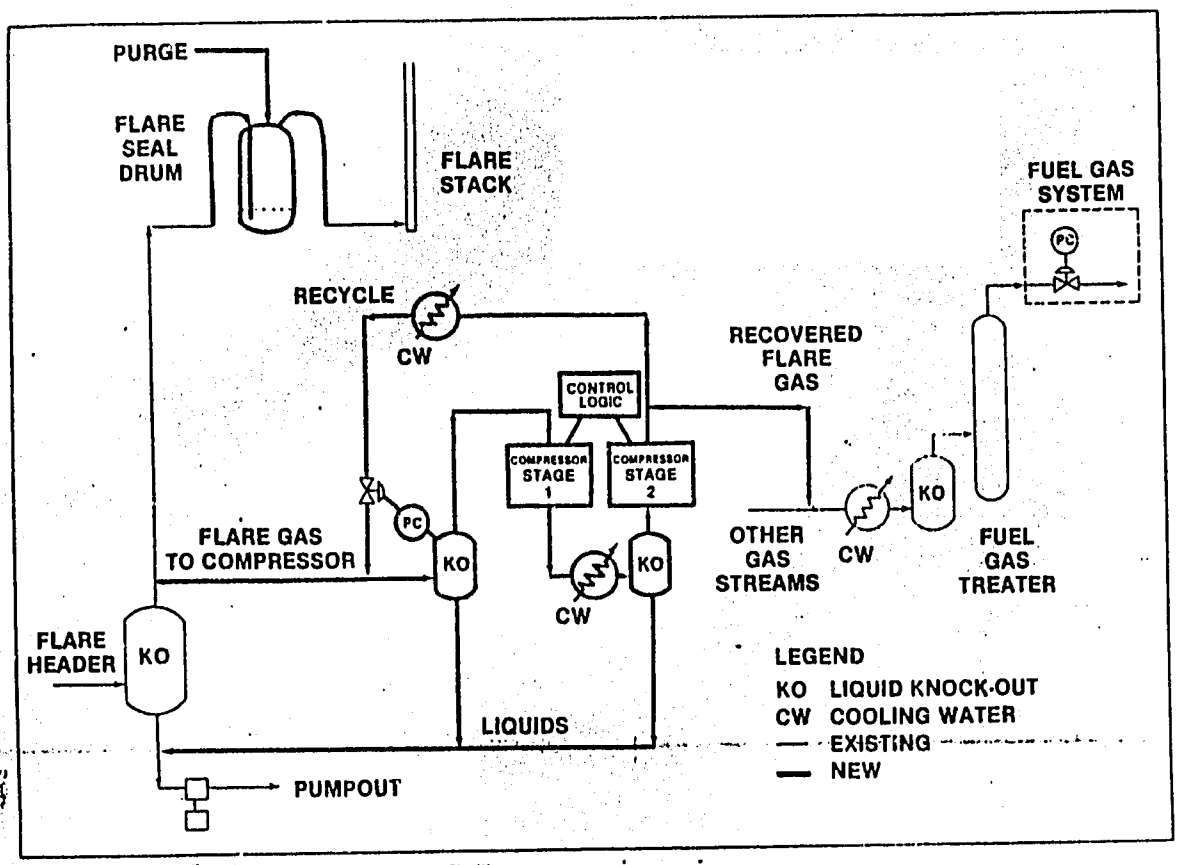

Figure 1: Schen *Refinery Flare Gas Recovery Facility*

The flare seal drum is provided for two purposes. First, it holds a slight positive back-pressure on the flare header to supply suction pressure for the compressor. Secondly, it prevents air from being drawn down the flare stack. This could happen in the event a vacuum is pulled in the flare system due to compressor controls malfunction or thermal contraction of hot vapours. (Reference 11)

SYSTEM OPERATION

Under normal conditions, the compressor draws flare gas from the flare header and boosts it to fuel gas treater pressure. There is insufficient flare header pressure to break the seal. The liquid seal in the flare seal drum remains undisturbed, so no flare gas is wasted to the flare stack.

Under abnormal upset conditions, the flare gas flow over and above the compressor capacity will break through the liquid seal and out to the flare stack. The compressor should continue to recover its design flow. The seal reestablishes itself while the compressor continues to operate.

DESIGN GUIDELINES

The design of flare gas recovery facilities should be based on the following general guidelines:

1. Safety

The major consideration in the system design is the prevention of air ever entering the flare system. A flare seal drum should be provided for this purpose. This assures highly reliable protection against overpressuring the system while maintaining a positive seal barrier to reversed flow.

As a back-up measure of safety, the control system should be carefully designed to prevent operation of the flare gas recovery system below atmospheric pressure. Some refiners provide an emergency cut-in of fuel gas to prevent pulling a vacuum on the flare (References 7 and 10). This safety objective can also be met using compressor control lock-ups, to automatically shut down the motor drive. Either precaution should prevent air ever being drawn back down the flare stack to mix with hydrocarbon vapours.

As a further precaution, the portion of the flare system downstream of the seal should be purged continuously. Either refinery fuel gas or a continuous source of nitrogen may be used as the purge medium (References 7 and 11). The purge guards only against air downwash into the flare stack.

2. Reliability

Because of the high value of the energy savings, efforts to achieve a high on-stream factor through the design of a highly reliable system are warranted. Such design features should include generous knock-out facilities, proper compressor metallurgy, and extensive compressor protection instrumentation.

Proper selection of the type of compressor for each application is very important. Although, theoretically, any kind of compressor can be used, some kinds have earned broader acceptance in this service than others (Reference 2). In refinery flare gas recovery service, many modern installations feature a single reciprocating or rotary screw machine. Older designs often featured several machines in parallel, either for flow control or for reliability reasons (Reference 9). In addition to the usual criteria of hardware reliability and installed cost, consideration must be given to materials selection, amount of condensation, and ease of maintenance.

After the compressor type is selected, the machine must be carefully specified, in order to achieve high reliability. It is very important that the compressor specification be based on a realistic range of flow properties. This composition affects more than just compressor size and motor rating. It may also govern the amount of liquid hydrocarbon and water that may condense in the knock-out drum. Only by this sort of attention to detail can a highly reliable equipment package be engineered.

3. Capacity

The normal flare loads vary widely depending on refinery throughput and operating mode. To enable recovery of over 90 percent of the total annual flare load and keep flaring to a practical minimum, the compression facilities should be designed to handle about 2 to 3 times the average normal flare load. Other plants, such as chemical plants, may have lower normal variation in flare rates. For this reason, the installations may be sized for a lower flow range.

The additional compressor capacity, purchased at modest incremental cost, provides the required rangeability. This wide flow range of operability has been found necessary to minimize losses.

A sophisticated compressor control strategy is desirable to maximize energy conservation benefits under normal, partial-load situations. With the machine normally running well below the rated capacity, the load controls must be able to quickly adapt to higher flowrates to prevent unnecessary losses. Without such controls, the system would be very wasteful at the usual turndown conditions.

The flare gas recovery facilities should be designed to handle the normal range of molecular weight of the flare gases. This normal range may be best determined by numerous spot determinations over an extended period of typical, steady plant operation. The extremes that occur only during rare upset or turnaround conditions need not be included.

Certain infrequent flare gas streams, that might malaffect system recovery, long term, may be segregated. Such streams could bypass flare gas recovery and go to the seal drum directly. An example would be a stream rich in hydrogen sulphide.

4. Location of the Compressor

Although the flare seal drum must be located along the flare header near the flare stack, there is considerable latitude in the selection of the flare gas compressor site. It need not be located close to the seal drum, the Operations Control house, or the fuel gas treating unit. It may prove most convenient to locate the machine within the battery limits of a process unit. The existing process unit operators can usually handle the few additional chores with minimal extra effort.

Among the factors determining compressor site selection are fire protection considerations, maintenance access, system hydraulics, piping costs, line sloping for drainage, utilities availability, safety, and recovery system/process unit integration. This latter item may prove very important because the flare header tie-in location may impact upon the stream factor of the system. In general, the compressor should be located so that the effect of process unit shutdowns will not affect its availability.

5. Seal Drum Configuration

The seal drum should be positioned downstream of the flare liquid knock-out facilities. The seal drum should also be designed for liquid knock-out to prevent carryover of the liquid seal fluid during upset conditions. The seal drum should be of similar design philosophy as that in the API Recommended Practice 521 (References 1 and 7). A vertical configuration may be preferable to horizontal, for spatial reasons.

Figure II is a photograph of a vertical seal drum. Rather than the baffle weir and drain system as shown in Reference 1, liquid level regulation and preferential hydrocarbon skimming may be accomplished using multiple standpipes of differing heights.

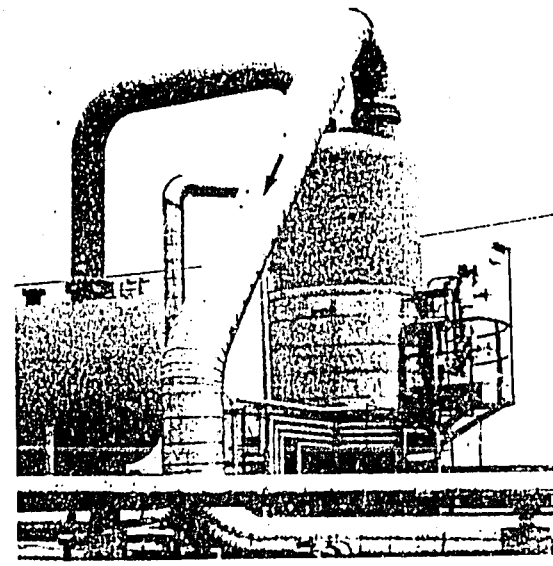

Figure II: A Vertical Seal Drum

Experience has proven the need for attention to vessel internals to prevent troublesome wave action of the disturbed seal fluid. Such disturbances may occur due to an excursion in flare flow that breaks the seal (Reference 11), or due to incorrect tuning of compressor controls. Unwanted seal fluid wave dynamics in such drums have been known to give operating problems. These problems may include vibration, suction pressure instability, and cyclic flare flame puffing. Proper attention to the asymmetry of internals and wave dynamics would avoid these problems.

Although water appears to be widely accepted as the conventional seal fluid, other fluids such as stove oil or glycol/water mixtures are possible alternatives. Fluid selection requires consideration of freeze protection (in cold climates), hydrocarbon/water separation, implications of carryover, cost, availability, and disposal.

6. Compressor Controls

The conventional compressor control strategy calls for adjusting the (net) discharge flow of the compressor to maintain a constant suction pressure. A suction pressure of about 1 psig is high enough to prevent air ingress and low enough to allow the existing relief valves to perform properly. The suction pressure is determined by the seal liquid height in the seal drum. The sense point for the pressure control instrumentation should be in the compressor suction drum. This control signal can prompt a recycle spillback-to-suction to help control suction pressure. Other levels of control sophistication may also be considered.

For equipment protection, an automatic shutdown or lock-up system should be incorporated. The actual protection philosophy will depend on the specific machine, components, and operating philosophy. It should be noted, however, that an overly complicated lock-up system can be more trouble than it is worth. Nuisance trips of the system protection devices may occur so frequently as to penalize the on-stream factor.

7. Downstream Facilities

Downstream facilities, such as the fuel gas treater, must be able to handle abrupt transitions in gas flow and composition. Refinery flare gas normally contains some hydrogen sulphide, so the stream should be treated before it may be burned as refinery fuel gas.

745

Treatment is normally performed in the existing fuel gas cooler, fuel gas treater knock-out drum, and fuel gas absorber tower, if spare capacity exists.

Downstream of the treater is the fuel gas system itself. Thought must be given to how the fuel gas system can be made to adapt to abrupt variations in fuel gas supply. The fuel gas system control strategy may have to be modified so that the plant's marginal fuel supply promptly reflects such changes. This control strategy is trivial if the plant's marginal fuel is purchased natural gas, but sophisticated if it is plant fuel oil.

Another aspect of the downstream facilities, to be considered, is the routing of the flare liquids from the new knock-out facilities. The existing knock-out drum pumps should be verified as having adequate capacity and reliability to handle the increased liquid load. The hydraulic sizing of the existing pump discharge piping should also be checked.

SARNIA FLARE GAS RECOVERY PROJECT

System Definition

The Shell Canada refinery, supplying the Ontario market, is in the Sarnia "Chemical Valley", an hour's drive north of Detroit. The Shell Sarnia plant is medium sized. It has two crude units totalling 11 800 m^3/day (74 000 B/D) capacity. Its secondary process units include a hydrocracker, a catcracker, visbreaker, naphtha hydrodesulphurizer, distillate hydrodesulphurizer, and both Mogas and Aromatics catalytic reformers.

These refinery process units are protected by a single flare header leading to one of two flare stacks, each 24-inch diameter. Due to the moderate degree of unit-to-unit process integration in the plant, relief valve maintenance cannot be done practically between scheduled turnarounds. In 1976, concerted effort to minimize all sources of leakage to the flare proved insufficient. Despite these source control efforts, a pale flame was always visible at the top of the smokeless flare stack. It was concluded that the relief system was just too complex to police effectively. The flare laterals have over 90 points of entry (relief valves, vents to flare, etc.). It was not possible to eliminate the significant continuous flare gas flow component in this 25-year-old plant by non-capital operating improvements alone.

The Shell Canada systems were intended to recover the normal continuous flare gas flow. At the design stage, this normal flow was defined by many spot determinations of steady plant operation spanning six months. Each flow determination of this flare gas employed the so-called "tracer-gas dilution method" (Reference 3). This method is based on gas chromatography analyses of flare gas samples that were carefully timed and aspirated from the flare header.

Scope economics based on these data indicated that recovery of Shell Sarnia's normal continuous flare flow could justify a flare gas recovery system. The predicted energy recovery potential was equivalent to nearly 0.3 weight percent on Sarnia's crude intake. This appeared reasonable for a reasonably tight refinery of this intermediate complexity.

The typical Sarnia flare gas composition is given in Attachment I. The composition was calculated from many spot determinations, after the components of tracer-gas and purge gas to the flare laterals were subtracted. It was judged that the compressor would typically handle Sarnia refinery flare gas of 26.5 average molecular weight.

This molecular weight might range from 15 to 50, during normal steady operation. The presence of wet hydrogen sulfide in refinery flare gas, typically in concentrations of a few volume percent, governed some materials specifications for the compressor internals. Flare gas contaminants, such as chlorides, were present in only negligible trace quantities.

The Sarnia flare gas recovery facilities were constructed and commissioned in 1979. The compressor is a two-stage reciprocating machine. Figure III is a photograph of the compressor facilities. The machine is driven, through a speed reducer coupling, by a 400 BHP induction motor. Compressor discharge pressure is about 67 psig, determined by a downstream treating tower overhead pressure controller.

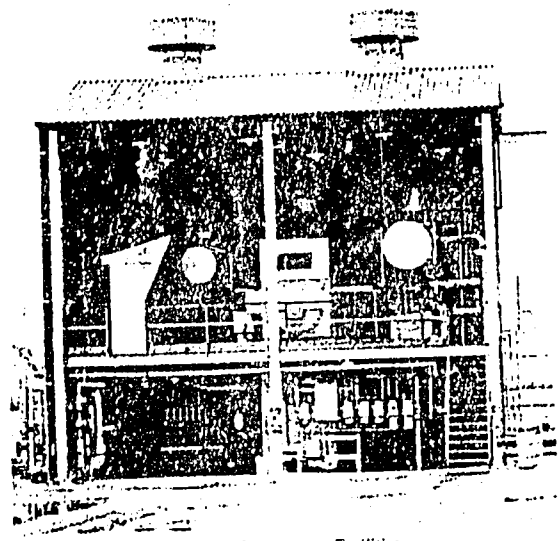

Figure III: Sarnia Flare Gas Compressor Facilities

The machine controls feature a fully automated logic control to load and unload the machine in 25 percent capacity load stages. This additional measure of control sophistication was devised to save motor horsepower under the normal partial-load conditions. The logic system's function is to significantly reduce the flow of recycle spillback. Conventional instrumentation is applied to automatically actuate the pneumatic unloaders to change load steps. The process operator has the ability to remotely bypass the automatic logic system so as to control the loading steps manually, should it be necessary.

Sarnia Operating Experience

The Sarnia compressor and single seal drum were commissioned in October 1979. After the initial year of debugging for the compressor facilities, instrumentation, and seal drum, the installation has performed with very minimal involvement of either process operators, or maintenance mechanics. The Sarnia compressor has performed satisfactorily, with about 420 days as the mean time between failures. There have been no failures during 1982.

The machine is now expected to operate long-term with a hardware on-stream factor of about 97.5 percent. It was planned that the machine be isolated for routine maintenance and inspection during scheduled turnarounds of the affiliated crude distillation unit.

In the first few months after start-up, the attending process operators were irritated with an unreasonably high frequency of auto shutdowns of the machine. Most auto shutdowns were due to low suction pressure or high suction knock-out drum level. At each such incident, the operator would have to check out the reason for the alarm shutdown, before attempting a restart on-site. Within a year, the problems were largely eliminated by means of revisions to the seal drum and unit operating procedures. Auto shutdowns of the Sarnia compressor have been very infrequent in the last two years.

During the first few months of operation of the compressor and seal drum, Shell Sarnia was plagued with "smoke signal like puffing of the flare during normal compressor operation. This problem was due to rhythmic seal fluid wave dynamics within the seal drum (References 11 and 12). Despite fine-tuning of the suction pressure control instrumentation, the puffing persisted. A five second puff of black smoke was emitted from the flare stack tip every minute. When warmer weather permitted shutdown of this part of the flare system, seal drum modifications to disrupt the symmetry of the wave action were made. Since then no further flare puffing has occurred to date.

246

MONTREAL EAST FLARE GAS RECOVERY PROJECT

System Definition

Montreal East Refinery, supplying Shell Canada's markets in the Province of Quebec and the Atlantic Provinces, is in the heavy industrial complex east of Montreal. The Shell plant is relatively large and complex, by Canadian standards, with 19 100 m^3/day (120 000 B/D) crude capacity. Its secondary process units include a hydrocracker, a catcracker, a thermal cracker, several hydrotreaters and Mogas catalytic reformers, an alkylation unit, a hydrogen plant, and a luboil complex.

These process unit areas, excluding the Lube Oil Complex are protected by two flare stacks, both normally in service. One is a 24-inch diameter and the other 20-inch. A flare seal drum was provided at the base of each flare stack and the flare header networks were connected. The new compressor draws suction on the merged system. The smaller portion of the network was connected eight months after the compressor started up on the main system.

At the design stage of the Montreal East system, the determination of flare gas normal flow was undertaken using the tracer gas dilution technique. These efforts were confounded by insufficient mixing of flare gas and tracer gas. Over the years, the plant had grown such that there were multiple flare headers to each flare stack. Without adequate mixing between the headers, the flare flow results were found to be suspect.

To overcome this obstacle, it was decided to estimate based on Shell Sarnia's experience, rather than measure, the normal flare gas flow. This was defined, in this case, to be the equivalent of 0.4 weigh percent of nominal crude intake. It was decided that the greater plant complexity at Montreal East warranted using 0.4, rather than the 0.3 found to represent Sarnia's design normal flow. The compressor capacity was then based, as in Sarnia's case, on 2.5 times this design normal flow.

From the numerous flare gas analyses, it was found that the compressor at Montreal East would handle flare gas of similar composition and moleculdr weight to that observed at Sarnia. (Attachment I).

The Montreal East Refinery flare gas recovery project lagged the Sarnia system by over a year. It drew heavily on the experience and design philosophy developed over the course of the Sarnia project. The Montreal East compressor is a two-stage reciprocating machine. It is driven, through a speed reducer coupling, by an 1100 BHP induction motor. The compressor has instrumentation similar to the Sarnia machine.

Montreal East Operating Experience

The Montreal East compressor and one of the two seal drums were commissioned in December 1980. The second seal drum and the related flare header were connected in June 1981.

The Montreal East flare gas compressor has performed very reliably, with minimal downtime in the last year. The machine has performed continuously and without any major incident for the past two years. It normally operates independently of process unit turnarounds.

During the first partial year of compressor service, until the second flare network was connected, Montreal East experienced cyclic smoky puffs from its 24-inch diameter flare stack. During the turnaround June 1981, both their seal drums were modified, to overcome the unwanted seal fluid wave action (References 11 and 12). The modifications remedied the "smoke signal" problem completely.

The only other noteworthy event occurred when the discharge temperature rose close to, the allowable maximum. This was found to be due to a leak from a source of high temperature gas rather than system malfunction. Elimination of the leak returned all temperatures to normal without damage to temperature-sensitive parts.

COMMENTARY ON THE TWO PROJECTS

Long Term Operating Concerns

One concern is that the normal flare gas flow might creep up, in future, to normally utilize the full capacity of the compressor. At both locations, the opposite has occurred, due to improved relief valve maintenance. The normal flare flow is now routinely measured with an orifice/DP cell downstream of the compressor.

The net flow is currently down 15-20 percent from that predicted as normal for this cruderate. This is, in part, a benefit due to greater flare system surveillance and recent turnaround relief valve maintenance. This normal flow is expected to continue to vary between major turnarounds and relief valve maintenance periods but is not likely to dwindle as some would suggest (Reference 6).

Some concern has been expressed by others about the service life of valves in reciprocating flare gas compressor service (References 5 and 7). The problem has been described as gummy fouling. There has been no such serious problem with either of the Shell Canada installations to date. It is our speculation that the superior service life of our valves may be due to the composition of the flare gas or to the careful attention to line sloping and knock-out facilities. There has been no problem with scale deposits anywhere in the system.

Installed Cost

Inflating capital costs to January 1983 U.S. dollars, the following ratios may be deduced for a hypothetical refinery on the U.S. Gulf Coast. In 1983 a small system, like Shell Sarnia's, would cost about 0.7 dollars (U.S.) per SCFD of compressor capacity. A larger system, like Montreal East's, would cost about 0.5 dollars (U.S.) per SCFD of compressor capacity.

The cost range indicated above is only partly due to economies of scale. The project engineers for the Montreal East project drew heavily on the experience developed over the course of the initial (Sarnia) project. A further economy was realized by doing the two projects back-to-back by the same contractor. This helps explain why the Montreal East cost per unit recovery was lower.

Operating Cost

The operating cost of utilities, such as electricity and cooling water, is very minor compared to the value of the recovered flare gas as marginal fuel. The major utility cost component, electricity for the compressor drive, costs only 1-2 percent of the net energy recovery benefit.

The two installations have performed with very little involvement of the process operators. The compressor site is checked each shift during routine rounds of the adjacent process unit. The typical check of the flare gas recovery facilities might total 1-2 man-hours per day, on average.

It appears to be too early in the life of these machines to predict long-term average maintenance cost, with much confidence. After the initial year of debugging and inspection, the maintenance costs for each system have been under 3000 dollars per year. Until more long-term maintenance cost data becomes available, it must be assumed that each machine's maintenance costs will be similar to those of other reciprocating compressors in hydrogen service.

Stream Factor

Because high equipment reliability is now attainable, the stream factor for a modern flare gas recovery facility may be governed more by the system configuration than hardware performance. This aspect of recovery system/process unit integration impacts on project economics.

In Sarnia's case, the flare line tie-in was made upstream of the No. 1 Crude Unit battery limit block valve, while it was blanked during a turnaround. For this reason, the compressor is unavailable whenever the flare line from No. 1 Crude Unit is isolated. Clearly, the tie-in location selected has a direct bearing on the long term on-stream factor.

247

In Montreal East's case, the new compressor was installed on the plot space previously occupied by an older flare gas recovery compressor. The original machine, in use since 1966, was small, unreliable, and prohibitively costly to maintain. The obsolete machine was removed to provide an ideal location for its replacement. Reuse of the original tie-in point eliminated the compromises and cost of a new flare line tie-in. Due to this tie-in point, the new Montreal East flare gas compressor can continue operation independently of any process unit turnaround. Maintenance overtime premium can certainly be justified if it puts the machine back on-stream sooner. Such things should help keep the long-term stream factor to better than 0.97.

Energy Conservation Benefits

The driving force for each Shell Canada project was the energy conservation economics. Benefits were predicted based on the fuel equivalent of the average normal flow recovered each year times the relatively low Canadian value of each refineries marginal fuel. (Note: Canadian energy prices were well below world price.) Naturally, these average normal flows were determined only after a conscientious flare gas 'source control program' had been implemented. Both projects have had actual simple payouts of between two and three years.

It may be more convenient if we try to translate this payout into a U.S. Gulf Coast perspective today. Using an assumed marginal fuel source value of 4.50 dollars (U.S.) per MMBtu, a hypothetical flare gas recovery system built today in a U.S. Gulf Coast refinery would be economically attractive. Its simple payout before tax would be less than two years.

Pollution Abatement Benefits

An obvious benefit of a flare gas recovery system is the pollution abatement benefit through elimination of most of the normal flare stack sulphur emissions. Compressed refinery flare gas, containing typically 0.5-3.0 volume percent hydrogen sulphide, can be blended with other sour gases fed to a fuel gas treater. Essentially all hydrogen sulphide is there removed and diverted to the refinery Sulphur Recovery Unit. Such treatment of flare gas effectively reduces Sarnia's flare sulphur emissions by at least 0.5 ton per day.

A second, but less obvious, pollution abatement benefit for some plants may be the reduction in refinery fuel oil sulphur emissions. Marginal fuel gas recovered by the flare gas compressor reduces, by an equivalent heating value, the consumption of the plant's marginal fuel source. If that source is fuel oil containing sulphur, the recovered flare gas would effectively reduce the refineries fuel oil sulphur emissions. This may, however, be viewed as an artificial environmental benefit. The fuel oil saved will ultimately be burned by a customer elsewhere.

A third pollution abatement benefit is the reduction in flare luminosity and noise experienced by residential neighbours and plant personnel.

SUMMARY

Modern flare gas recovery technology is now readily available for profitable application in even medium size oil refineries. If source control measures alone cannot do the job in an older or complex refinery, flare gas recovery can be the answer. Custom designed systems, such as those at Shell Canada Limited's Sarnia and Montreal East refineries, can be highly reliable, safe and economically viable. Environmental benefits are a bonus.

REFERENCES

A search of the open literature, to the end of 1982, revealed very little on the topic of flare gas recovery system design. The survey included most trade magazines. The references listed below are the best found in the open literature.

1. Guide for Pressure-Relieving and Depressuring Systems, A.P.I. Recommended Practice 521, Second Edition, September 1982
   — Section 5.4.2, page 51.
   — Figure B-1, page 81.
2. Paper in Oil & Gas Journal — April 28, 1980, pages 98-102, "Flare-gas System Can Be Designed to Recover a Profit for Plant" by D.D. Livingstone, Polysar Ltd., Ontario.
3. Paper in Chemical Engineering Progress — Volume 70, No. 7, July 1974, pages 74-77. "Fuel Recovery from Flare Systems" by L.R. Steenberg, Air Resources Inc., Illinois.
4. NPRA 1976 Question and Answer Session on Petroleum Technology
   — Environmental Control Question 5, pages 102-103.
   — Environmental Control Question 2, page 104.
   — General Processing & Support Operations Question 3, page 141.
5. NPRA 1977 Question and Answer Session on Petroleum Technology.
   — Processing and Support Operations Question 6, pages 23-24.
6. NPRA 1978 Question and Answer Session on Petroleum Technology.
   — General Processing and Support Operations Question 37, page 30.
   — General Processing and Support Operations Question 59, page 39.
7. NPRA 1979 Question and Answer Session on Petroleum Technology.
   — Environmental Control and Energy Conservation Question 55, pages 149-150.
   — Audience questions, pages 151-152.
8. NPRA 1980 Question and Answer Session on Petroleum Technology.
   — Environmental Control and Energy Conservation Question 52, page 167.
   — Audience questions, page 168.
9. Paper in Erdoel Erdgas Zeitschrift — Volume 93, No. 3 March 1977, pages 91-92 "Recuperation of Flare Gases — A Technical Process for the Economic Utilization of Flare Gases" by V.F. Schwarz and E. Bauer (in German).
10. Paper presented at A.P.I. Subcommittee On Process Operation — May 11, 1977, "Flare Gas Recovery System" by L.F. Jensen, Mobil Oil Corporation, Torrance Refinery.
11. Paper in Oil & Gas Journal — February 14, 1972, Pages 91-92, "What Is Flare's Proper Purge Rate?" by R.D. Reed, John Zink Co., Tulsa.
12. Paper in Chemical Engineering Progress — Volume 64, No. 6 — June 1968, Pages 53-57, "Design and Operation of Flare Systems" by R.D. Reed, John Zink Co., Tulsa

ATTACHMENT I
TYPICAL REFINERY FLARE GAS COMPOSITION
(Mol. %)

	Sarnia Refinery (1977)	Montreal East Refinery (1978)
Nitrogen	4.4	3.0
Carbon Dioxide	0.5	1.2
Carbon Monoxide	0.5	0.4
Hydrogen	31.8	35.3
Hydrogen Sulphide	2.1	3.0
Methane	15.7	23.3
Ethane	11.4	3.5
Ethylene	1.0	0.7
Propane	11.0	8.3
Propylene	5.4	3.6
Butane	9.3	9.8
Butylene	2.1	1.8
Pentane	3.8	4.2
Hexane (etc.)	1.0	1.9
MW	26.5	24.7
LHV (Btu/SCF)	1340	1250
HHV (Btu/SCF)	1465	1370

248

PETROLEUM REFINING ENERGY USE IN RELATION TO FUEL PRODUCTS MADE

J. R. White, J. F. Marshall, G. L. Shoemaker and R. B. Smith
Mobil Research and Development Corporation
Princeton and Paulsboro, New Jersey

ABSTRACT

In recent years crude oils available to refiners have required more energy to refine and refiners have adjusted their processes to obtain better energy efficiency. In addition the shift to lead-free gasoline has led to refining adjustments that reduce the energy effects of changing octane levels. These changes have been incorporated in the linear program representation of a modern "fuels" refinery. The total flow of crude oil to products and the corresponding energy use are included in this representation. The shifts in processes and stream flows and corresponding energy changes as related to gasoline octane levels are illustrated by detailed flow charts. A method for allocating process energy consumed to individual products is offered. The allocation to gasoline is shown to be somewhat higher than to other products. The energy to change gasoline octane levels is a very small fraction of refinery energy consumption.

* * *

Petroleum refining is one of our most energy intensive industries. Today in the US the energy consumed in refining a barrel of crude oil is on average about 7% of the energy contained in the oil. Some refineries that produce lube oils and petrochemicals consume much more, up to about 14%; and some simple topping-reforming refineries that sell rather than process residual oil are lower, as low as 4.5%.

As the years have gone by the crude oils discovered in the world have on average gotten heavier and they contain more sulfur. These heavier oils are harder to refine and require more energy to refine; and the refiner, like everyone else has to pay more for his energy.

It is not surprising, therefore, that over the past eight or so years refiners have taken a hard look at their processes to see where the energy is used and to see what can be done to reduce it. They have also asked what happens to energy use when the slate of consumer products they must make changes in response to consumer demand or altered product specifications; and to what products is it appropriate to assign increments of energy use.

Most US refineries are old and they contain a complex collection of process units and unit configurations. Because of complexity many refiners use linear program analysis to help guide their operations, to plan changes, and estimate profitability. Linear programs can also provide a substantial amount of information on energy flows.

With the advent of fuel alternatives such as alcohols or ethers, attention has more recently focussed on the amount of energy that can be saved in refining when the alternative is substituted for gasoline. This is also a question that can be addressed by linear program techniques.

What follows is the description of a modern refinery and results from its linear program representation. This refinery produces fuels from a crude oil somewhat heavier and higher in sulfur content than most used today--a mixture of Arab Heavy and Arab Light crudes such as might be laid down in US ports toward the end of the 80's. It produces a slate of premium products and makes use of delayed coking of vacuum residuum to avoid making low value residual oils whose demand is decreasing.

The product slate and the BTU content of the products from this refinery are shown in Slide 1. Units are thousands of barrels per day and billions of BTU's per day. The BTU's coming into this 150,000 barrel per day refinery total 811 billion and the energy consumed is 10.2% of the entering energy. This energy consumption is somewhat higher than today's average because of the poor quality of the crude oil.

The principal process units that make up this refinery complex are shown in Slide 2. The energy consumed in each process unit is listed as is the energy consumed per stream barrel processed. These energies were obtained by detailed engineering studies of each unit. They include heat, steam, and electricity for each unit and also its proportional share of the energy for the operation of utilities and sulfur recovery plants which are not listed.

Some idea of the complexity of this refinery is afforded by Slide 3. Each unit is represented by a box. The size of each box is proportional to the volume that the corresponding unit must handle. Every unit is connected via stream flows to almost every other. Only the principal connections are shown here. The details are not needed for this discussion but they are available for those of you who may wish them. Because of complex couplings, whenever the operation of a single unit is changed, others must also be adjusted. Mass balance must be maintained over the complex. The multiple streams from the unit operations are ultimately blended into the product slate.

249

SLIDE 1

REFINERY SLATE

PRODUCTS	10^3 bpd	10^9 Bt
REG. GASOLINE	57.60	280.25
PREM. GASOLINE	24.69	117.01
JET FUEL	24.29	125.95
DIESEL AND #2 OIL	30.56	164.39
LPG	2.85	10.19
PET. COKE	(2.13 10^3 tpd)	63.87
INPUTS		
CRUDE OIL	150	811.13
BUTANES	4.91	18.96
ELECTRICITY		9.47

REFINERY ENERGY; 10.20% OF INPUTS.

SLIDE 2

PRINCIPAL PROCESS UNIT ENERGY USE
150,000 b/d REFINERY → 811 BILLION BTU/DAY

	PROCESS ENERGY 10^9 Btu/d	%	PROCESS ENERGY PER UNIT THROUGHPUT 10^6 Btu/b
ATMOSPHERIC STILL	15.11	1.86	0.10
VACUUM STILL	7.17	0.88	0.099
COKER	6.44	0.79	0.17
FLUID CRACKER	10.42	1.28	0.21
ALKYLATION UNIT	3.34	0.41	0.19
REFORMER	11.75	1.45	0.33
HYDRODESULFURIZER	3.33	0.41	0.062
HYDROTREATER	5.73	0.71	0.14
NAPHTHA PRETREATER	4.51	0.56	0.10
SATURATED GAS PLANT	2.96	0.36	0.24
UNSATURATED GAS PLANT	5.34	0.66	0.26
HYDROGEN PLANT	5.04	0.61	5.91
		9.98	

250.

SLIDE 3

REFINERY CONFIGURATION

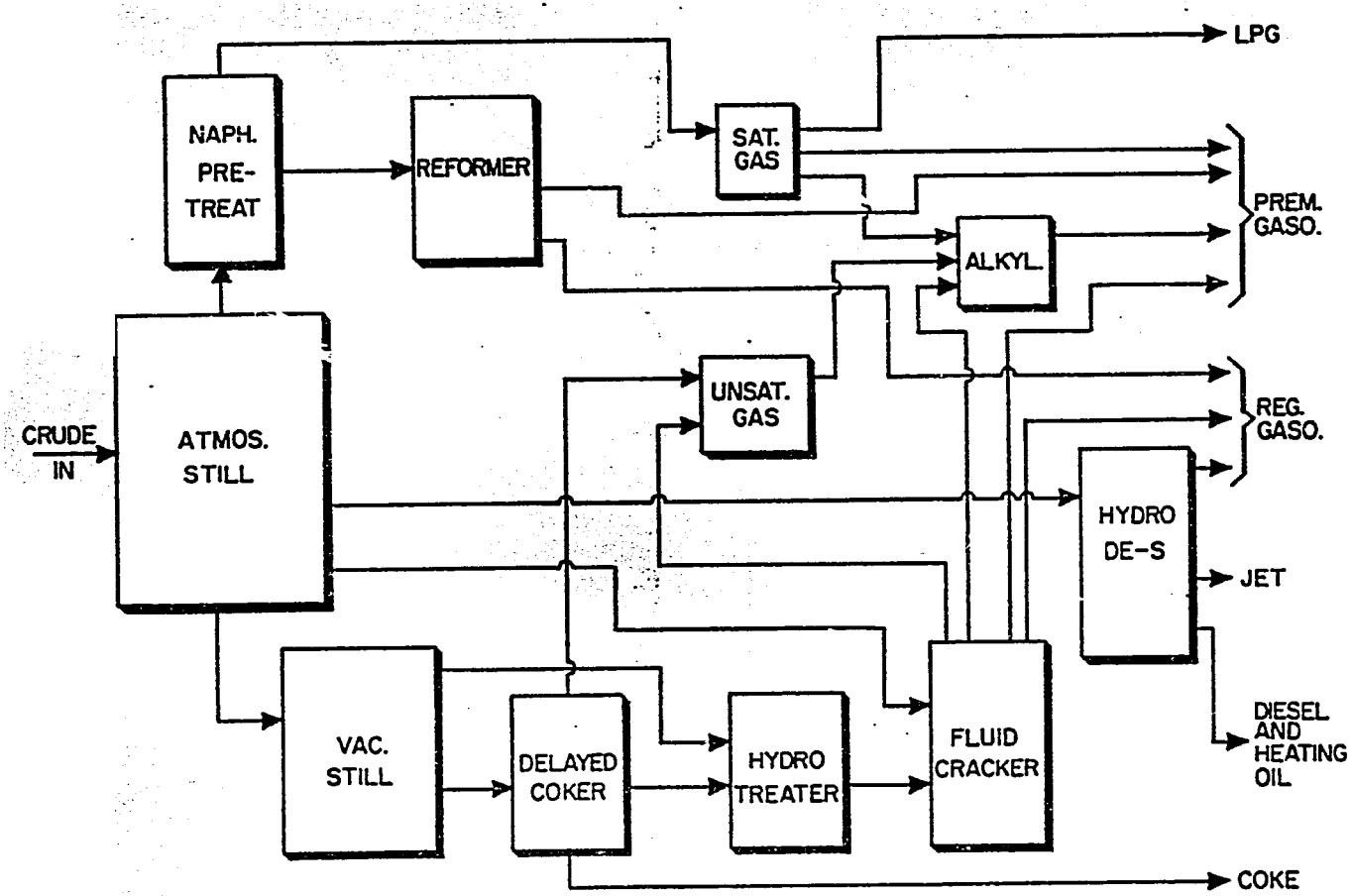

ONLY PRINCIPAL STREAM FLOWS ARE SHOWN

257.

Not only do petroleum streams flow between units but it is possible to imagine process energy as flowing also. For example the first unit in the complex, the crude still, consumes considerable energy. Four major streams flow out of it. The energy consumed in the still can be imagined as partitioned between these four streams. Each of the streams flows to its next unit in the complex. There, additional process energy is consumed. This is added to that coming from the crude still and is re-partitioned to the outgoing streams from that unit. Ultimately this imagined flowing process energy accumulates at the product outputs. By using this scheme of partitioning and tracing it is possible to identify each product with a process energy consumed in its making.

Slide 4 shows how total process energy is allocated to products using this tracing technique. Each product is identified with a percentage of the entire refinery process energy. In addition the process energy needed to make each product is expressed as a percentage of the heat of combustion of the product. For example, the process energy to make 1 gallon of regular gasoline is 13.6% of the combustion energy contained in that gallon of gasoline. Thus if a gallon of gasoline is displaced by a fuel alternative, BTU's equivalent to 1 gallon plus 0.136 gallons for process energy for a total of 1.136 gallons are displaced at the refinery. Of course, for small gasoline volume reductions a refiner has many ways of adjusting his processes and these adjustments may or may not correspond to a process energy reduction equal to 13.6% of the energy content of the reduced volume. But large adjustments should approximate this value for a refinery and crude oil of the type discussed.

What happens when product specifications change; for example, if an alcohol or ether octane improver from an outside source is used in all of the gasoline made so that the octane level of the base gasolines made at the refinery can be reduced?

If the octane change is 3 units, such as is possible with 10% ethanol in, for example, gasohol, the total refinery energy consumption drops from 10.20% of input energy to 9.66%, an average of 0.18% per octane number. This corresponds to 1.1% of the BTU content of each gallon of gasoline refined--a very small effect.

This change in energy usage is accompanied by a change in the product slate. The new product slate is compared in Slide 5 with the reference slate shown earlier. Both slates provide gasoline/distillate ratios of 1.5. Notice that whereas gasoline and diesel volumes have gone up with octane reduction, jet fuel and LPG volumes have gone down. After correcting for butane input differences the net volume of high grade liquid products made for distribution has not changed at all. The total energy content of these liquid products has increased by about 0.09% of refinery input energy for each octane number decrease.

If the octane numbers of the base gasolines are increased from the reference levels, the energy effects are slightly greater; refinery energy consumption increases by about 0.30% of refinery input energy for each octane number increase up to about 2 units above the reference. Energy consumption change is a non-linear function of octane number so that it would be improper to extrapolate these energy values very far above and below the reference level.

SLIDE 4

PROCESS ENERGY ALLOCATION TO PRODUCTS

	ALLOCATED PROCESS ENERGY AS % OF TOTAL PROCESS ENERGY	ALLOCATED PROCESS ENERGY AS % OF HEAT OF COMBUSTION OF PRODUCT
REGULAR GASOLINE	44.5	13.6
PREMIUM GASOLINE	23.4	17.1
JET FUEL	9.4	6.4
DIESEL AND #2 OIL	13.6	6.8
LPG	2.2	18.3
PET. COKE	7.0	9.3

SLIDE 5

EFFECT ON REFINERY SLATE OF REDUCING OCTANE NUMBERS

PRODUCTS	REFERENCE MODE 10^3 bpd	(R+M)/2 = 3 BELOW REFERENCE 10^3 bpd
REG. GASOLINE	57.60	59.86
PREM. GASOLINE	24.69	25.66
JET FUEL	24.29	23.14
DIESEL AND #2 OIL	30.59	33.87
LPG	2.85	0.95
PET. COKE	(2.13 10^3 tpd	(2.13 10^3 tpd
INPUTS		
CRUDE OIL	150	150
BUTANES	4.91	8.40
ELECTRICITY	(9.47 10^9 Btu/d)	(8.98 10^9 Btu/d)
REFINERY ENERGY % OF INPUTS	10.20	9.66

Let us close this discussion by talking about other work. The effects of octane change on gasoline volumes and refinery energy consumption have been explored by many investigators over the years. Most of these investigations are older. A group of them has recently been summarized by authors at Ethyl Corporation. In general they show higher energy effects for octane change than found by us. There is, in addition, a very recent investigation that has been reported by authors at Amoco. They explored a refinery similar in configuration to the one we have described but running a good quality US crude. Their octane/energy effects are very close to the ones we have estimated.

Although the analysis of differences between investigations is a detailed and complex task and usually sufficient information is not available to enable it, it is tempting to view lower octane/energy effects as a reflection of refining improvements to conserve energy coupled with a general upgrading of capability to increase octane numbers, implemented to supply unleaded gasolines.

Retrofitting for energy savings

R.V. Elshout, C F Braun & Co., Alhambra, California

Individual refinery units are reviewed to show what can be done economically to reduce energy usage. Typical flow diagrams show areas to consider

ENERGY AUDITS PROVIDE a measure of current energy usage and indicate areas where energy usage can be reduced from present levels. The next step is to make an in-depth process engineering review to quantify what modifications can be made to a plant, what energy savings will result and what capital costs are needed for particular modifications that must be made. Economic considerations, together with space availability for new equipment, determine what can be done in an existing plant to economically reduce energy usage.

Energy audit. An energy audit in the strict sense is limited to the determination of energy usage levels for an entire plant or a particular process. Although this would seem to be a simple task, it can become quite complex in practice.

Typical refineries consume between six and ten percent of the Btu equivalent of the feedstock processed as energy in forms such as fuel, electrical power, and steam. This quantity varies with the complexity and age of the particular plant and with the type of feedstock, products produced and operating severity.

At an API meeting in Los Angeles, Grace and Fidoel presented results from a survey made of the refinery industry in 1976, which reveals several interesting facts:

Fig. 1 shows average refinery energy consumption by type. Process heat accounts for 65 percent, steam generation accounts for 28 percent and electric power generation only 7 percent. All process heat put into a process must be ultimately rejected to air or water cooling. Fig. 2 shows a fuel balance for the refinery industry. It should be noted that 48 percent is lost through the stack of fired heaters. A total of 30 percent is lost in nonrecoverable ways.

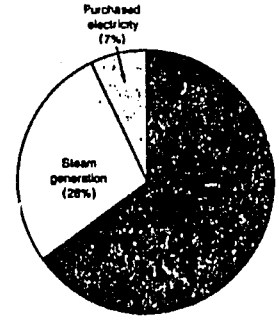

Fig. 1—Refinery energy consumption by types.

Energy-saving achievements attained by refineries in the period between 1973 and 1976 are shown in Fig. 3. Some 44 percent was achieved by adding heat transfer equipment, primarily heat exchangers and furnace/boiler heat recovery or control systems.

Energy measurement. The first step in an energy audit is to measure the current level of energy usage. Although this would seem to be a simple task, in practice it is not always an easy matter. The overall plant-purchased electricity and gas can be determined from utility bills. Where internal electricity is used to supplement purchased electricity and where internally produced fuels are burned, total plant energy usage may be difficult to monitor. Most refineries have a number of interconnected plants which include one or more process units. It is often difficult to isolate utility usage for the individual plants.

Fuel usage is the most difficult to monitor accurately because of the inherent inaccuracies of flow measurement devices. Where gaseous fuels are used, the pressure level and fuel composition further complicate the measurement accuracy of Btu usage. Most flow indicators on fired heaters only read accurately enough to indicate trends. This type of meter is accurate enough to control the process operation, but is not accurate enough to monitor fuel usage.

The most accurate method for determining Btu usage is often by calculation. The absorbed duty can be calculated knowing the process flow and the inlet and outlet conditions of the fired heater. The fired duty can be calculated from an Orsat analysis of the flue gas and a stack gas temperature. Overall heater thermal efficiency can also be calculated in this way.

Electricity usage can be monitored relatively accurately. Portable meters can be used to measure electrical current draw for each pump and compressor.

Steam usage can be measured relatively accurately by properly calibrated orifice meters in the steam lines. Condensate collection from the steam traps or process receivers can be used as a cross check on these measurements.

254

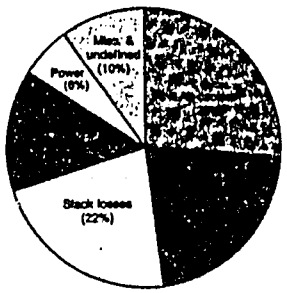

Fig. 2—Refinery energy disposition by types.

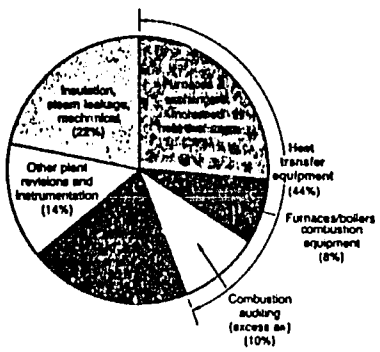

Fig. 3—Refinery energy conservation, 1978 vs. 1973.

Thermodynamic limitations. First and second law thermodynamic constraints set the minimum theoretical energy usage for a particular process. The first law and equilibrium considerations set the overall heat balance. The second law determines the amount of heat that can be exchanged between the heat sources and heat sinks. Heat requirements exceeding the amount obtained by process heat recovery must usually be provided from external sources such as fired heaters, steam heaters, electric heaters, etc. After heat exchange among process streams, air cooling and/or water cooling is used to remove additional heat in order to cool streams to their storage temperatures.

Modifications to the process operations can be used to make the thermodynamic principles work in favor of reduced energy usage. The underlying thermodynamic principle behind a process often reveals what process modifications will reduce energy usage. Additional process equipment is almost always required. The economic tradeoff between the incremental costs for energy saving equipment and the value of the resulting energy savings must be made to determine whethe the addition of new equipment is economical.

Utility usage. The utility usage in a refinery unit can be affected by several factors. The size of a plant is very important. As the plant size increases, more energy-efficient improvements can be justified by economy of scale. The age of the plant is also a factor. Older plants that were built when the cost of energy was low are usually very inefficient by today's standards. Over the years, most of these plants have been upgraded by retrofitting new heat recovery equipment where sufficient space is available. Finally, the type of feedstock and severity of the operation set the theoretical thermodynamic limitations that govern the minimum utility usage achievable. This together with energy and equipment costs establishes the economics for an energy efficient design.

The average utility usages for most of the common refinery processes are given in Table 1. These utility rates are based on 1,000 bpsd of thruput except for the units that are indicated on a different basis. These are typical utility values for the type of unit shown and operation indicated. The table also includes typical unit process heat exchange surface (which excludes coolers and condensers). These typical heat exchanger surface values vary with the size, complexity, severity, feedstock and age of a plant. However, where an energy audit indicates higher utilities than shown, and where lower exchanger surface areas are present, additional heat exchange should be considered.

Energy reduction. Energy conservation requires attention to reducing energy usage in three main areas: fuel usage, electric power usage and steam usage. Some examples of each of these are outlined below. In the later part of this article, illustrations will be shown of ways particular refinery processes can be retrofitted with energy saving equipment.

TABLE 1—Typical refinery utility usage (Per 1,000 bpsd capacity, except as noted)

Process unit	Fuel fired, MMBtu/h	Cooling water, gpm[a]	Power, kW	Steam, lb/h	Heat transfer exchanger surface, ft²
Atm. distillation					
25 °API Crude	2,500	375	10	333	1,200
40 °API Crude	3,300	500	13	250	1,000
Vacuum distillation	2,100	410	18	1,250	2,000
Visbreaker	8,000	240	18	1,250	
Thermal cracker	20,000	2,000	31	1,800	
Delayed coker	9,120	630	50	1,450	
Fluid coker	(250)[b]	630	175[c]	(3,300)	
Propane deasphalting	15,200	1,000	40	2,100	
Hydrotreating					
Naphtha feed	2,750	150	80[d]	700	800
Gas oil feed	3,540	250	80	700	
Cat reforming					
(98 RON)	16,000	950	150	1,800	
Cat cracking					
FCC, virgin feed	800	800	275[e]	650[f]	
TCC	2,000	800	225	(650)	
Hydrocracking	6,000	750	200[g]	630	2,100
Sulfur plant,					
10 tpd basis	1,800		45	(2,800)	
Cat polymerization	—	350	180	8,000	
Amine unit (MEA),					
10 tpd S basis		220	12.5	4,200	
Hydrogen plant,					
10 MMscfd basis	208[i]	200	1,400[j]	1,800	

NOTES

a Includes air blower for coke burning. Coke burned averages 15 percent production.
b Compressor power could be supplied from associated catalytic reformer.
c Power includes regenerator blower. No credit for letdown turbine.
d No credit for CO boiler waste heat recovery.
e Power exclusive of hydrogen makeup compressor.
f Fuel includes feed. Steam methane reforming.
g Power includes booster compressor up to 1,750 psig level.
h Cooling water based on 15 °F rise. Heat exchanger area includes process exchangers, but excludes water coolers.

255

Less fuel. One way to reduce heater duty is to make fundamental changes to the process that will either recover more process heat (increase heater inlet temperature), or reduce the process heat requirement (reduce heater outlet temperature). Several examples of increasing process heat exchange and reducing process heat requirements will be given for particular refining units. Thermodynamic considerations, together with economics, ultimately become the limiting factors.

Increasing heater efficiency is the other way to reduce fuel usage. Heat loss through the heater walls can account for between two and five percent of fuel consumption. Improved insulation or increased insulation thickness can often be justified with today's fuel cost. Heat loss up the stack has become a primary area of focus. Combustion air preheating or adding convection section heat recovery has become quite popular. Any modifications that are made to the stack can affect the furnace draft. Stack gas temperatures are limited by the sulfur dioxide dew point temperature. Retrofitting existing heaters can become messy if the plot area is crowded. Utility savings must pay for the cost of the retrofit equipment. Where induction blowers are required, the cost of the electric power also must be considered.

Less steam usage. Two types of steam are commonly used in a refinery. Live steam is steam in which no condensate is present, such as steam used for stripping. It is easy to overlook excess stripping steam use. Beyond a limit of 0.2 to 0.3 pound per gallon of stripped product, steam is wasted. Wasted steam is expensive from both fuel usage and boiler water makeup treatment. Process steam is also used for the heat input to reboilers and for driving steam turbines. Overall steam balances determine how much high pressure steam is available for letdown through steam turbines to low pressure levels.

REFINERY PROCESSES

A brief description will be given of major refinery process units supplemented by an evaluation of where the major energy saving opportunities exist. Means for reducing energy usage in a modern design by retrofitting existing facilities are included. Process schematics and process descriptions have been included for reference. The intent is to provide an insight into what energy conservation measures should be considered to reduce utility usage. Each plant and individual unit is unique and energy conservation measures will vary from plant to plant.

A process schematic is included for each of the major process units. Energy savings modifications are shown in dashed lines indicating where retrofit equipment can be employed to reduce energy usage.

Atmospheric distillation. Fuel reductions can be achieved by optimizing the heat recovery from the products, the pumparounds and the overhead stream. Heat recovery from a pumparound can be increased by using multiple side refluxes instead of a single side reflux. Heat input for vaporization can be reduced by using a preflash tower ahead of the atmospheric heater to vaporize some of the crude at a low temperature. Low pressure steam can also be generated which can be used for side stream stripping. Additional overhead heat can be recovered by using a hot reflux system. Only the net product vapor must be condensed at a lower temperature level—using air or water cooling. The temperature level at which the heat can be recovered from the reflux is increased with this system.

Live steam is used for the side stream strippers so no condensate recovery is possible. Therefore, steam stripping should be minimized. In this case, steam is usually being wasted when it exceeds 0.2 pound per gallon of light product and 0.5 pound per gallon of heavy product. Flow indicators and controllers are desirable to measure and control steam usage to the appropriate rates.

Optimum heat recovery in a well designed crude exchanger preheat system is the key to reducing fuel usage. It is important to recover and exchange heat at the highest temperature possible to achieve optimum heat recovery. Matching heat source temperature to heat sink temperature results in maximum heat recovery and minimum fuel usage. A crude preheat system usually represents the largest heat conservation potential in the whole refinery.

Fig. 4 shows a process schematic of an atmospheric unit that has been retrofitted with several of the energy conservation measures mentioned. The energy conservation retrofit items are shown by dashed lines.

Vacuum distillation. Integrating the heat recovery systems of the atmospheric unit and the vacuum unit can maximize overall heat recovery between the two units. The low temperature heat from the vacuum top pumparound can be used for low level crude preheat. The intermediate level heat from the middle vacuum pumparound can be used for intermediate crude preheat and the vacuum bottom used for high level crude preheat. Control of stripping steam is also important. Here, steam in excess of 0.5 pound per gallon for residuum stripping and 0.2 pound per gallon for side product strippers is wasted. Where vacuum bottoms are to be used for asphalt, a trapout tray above the flash zone with recirculation back to the heater inlet can reduce the required flash zone temperature to make the desired degree of asphalt penetration.

Use of a vacuum pump instead of steam ejectors can save large amounts of steam and has a very short payback period. Where a wet vacuum tower (steam stripping is used) the last vacuum jet can be replaced with a vacuum pump. In retrofit cases, the existing last stage jet is piped as a parallel standby for use when the vacuum pump requires maintenance. Steam superheating in the convection section of the vacuum heater can be used to provide the superheated steam often used in the stripping section. Fig. 5 shows a schematic of the vacuum unit along with some suggested modifications.

Propane deasphalting. Vacuum residuums contain high concentrations of sulfur, metals (particularly nickel and vanadium) and asphaltenes, which rapidly deactivate desulfurization and cracking catalysts. Propane deasphalting can be used to extract these catalyst poisons from heavy oil prior to cracking or desulfurization. Reduced crude is mixed with propane in the deasphalting tower. The non-asphaltic components flow out the top of the tower and this light phase goes to the oil stripper where the propane is removed and recovered. The heavy asphaltic phase leaves the bottom of the tower and is also stripped to remove soluble propane.

The propane deasphalting process is a very large heat consumer. The heat is used to heat up and vaporize the propane from extract and raffinates from the extraction tower. Designing an efficient heat exchange system (Fig. 6) together with finding heat sources at the required temperatures for vaporizing propane is the key to minimizing deasphalter heat usage. A recent

256

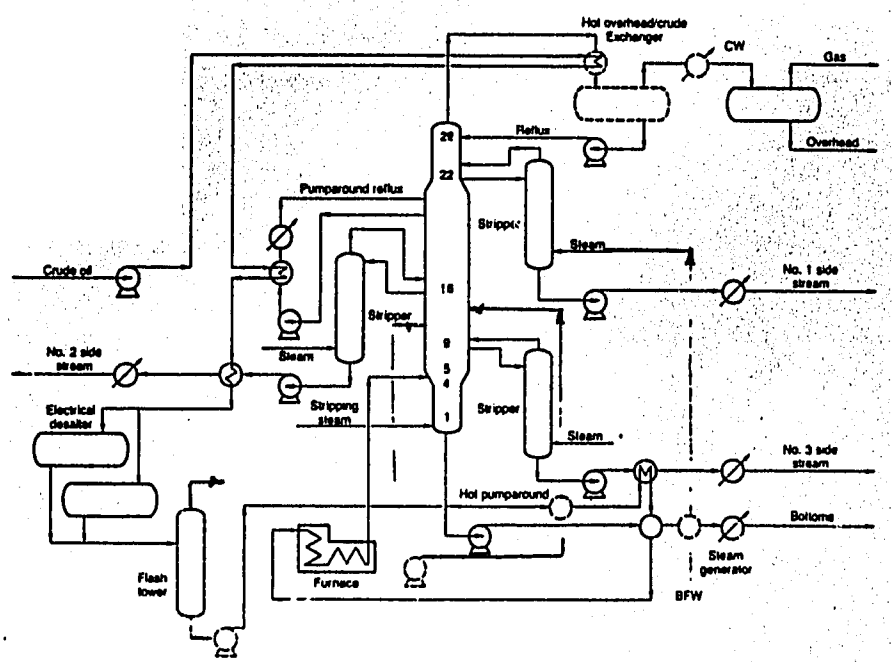

Fig. 4—Atmospheric distillation.

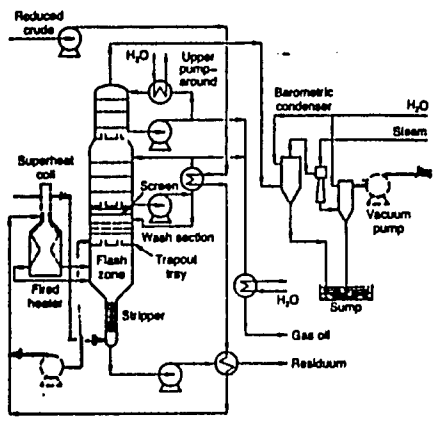

Fig. 5—Vacuum distillation.

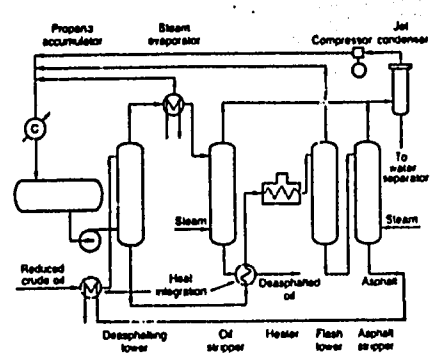

Fig. 6—Propane deasphalting.

251

advance in deasphalting is operation above the critical point such as with the ROSE process. This saves considerable heat input because it eliminates the large amount of heat required for vaporizing the solvent.

Catalytic cracking. Several energy conservation measures have been recently incorporated into more modern catalytic crackers. In the early 1960s, CO boilers were retrofitted to the outlets of the regenerator. The carbon monoxide in the regenerator off gas is completely combusted to carbon dioxide in the CO boiler to generate steam. Recovery of energy from the regenerator off gas through use of a power recovery turbine has also been used recently. Coupling the regenerator combustion air compressor to the power recovery turbine is a convenient way to use this recovered energy. Also, electric power generation is possible. High and intermediate temperature heat recovery from the fractionator tower can be used for feed preheat and steam generation. Heat from the fractionator can be used for steam generation, reboiling towers in the associated saturated gas plant or feed preheat to the cat cracker where cold feed is used. These modifications are included in Fig. 7.

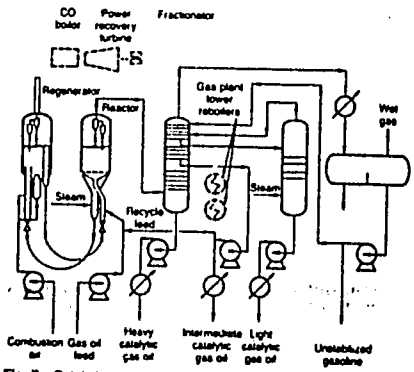

Fig. 7—Catalytic cracking.

Hydrocracking. These processes convert distillate boiling range feedstocks into low-sulfur, lighter products. Oil feedstock is mixed with hydrogen and heated to reaction temperature. The oil and hydrogen mixture first goes through a treating reactor and then a cracking reactor. Quench hydrogen is added between beds of the cracking reactor to control the temperature of the exothermic reaction. Reactor effluent is heat exchanged with feed, cooled and separated into a recycle gas and liquid. This liquid is flashed at a lower pressure and fed to a fractionator where the products are separated. Unconverted recycle oil is recycled back to the reaction section.

Fuel usage can be optimized by maximizing the feed heat exchange with reactor effluent (Fig. 8). Heat is available for preheating the feed to the fractionation system and reboiling columns. Also, heat from the fractionation system can be recovered.

A letdown turbine can be used instead of a pressure reduction valve to recover energy from the high pressure separator liquid before it goes to the low pressure separator. This power can be used to supply part of the feed charge pump power requirements.

Hydrogen plant. In this process, a large amount of fuel (averaging 40 percent of the heat content of the process feedstock) is burned in the reformer furnace. Effective recovery of the waste heat from the reformer heater stack gas by design of any energy efficient heater convection section is the key to energy efficient hydrogen plant design. Waste heat can be used to preheat feed, generate steam used in the process and superheat process steam.

The regenerator reboiler for the carbon dioxide removal system also uses large amounts of heat. Physical solvents that operate on the principle of absorption of CO_2 at high pressure and release of CO_2 at low pressure have recently been used to eliminate the regenerator reboiler heat requirement. With this system, it usually pays to compress the gas before CO_2 removal using a centrifugal compressor. The molecular weight of the product gas before CO_2 removal is high enough that a multistage centrifugal compressor can be used. A physical solvent can then be used to remove the CO_2 from the hydrogen. A high pressure methanation step is required. This system is included in the process schematic of Fig. 9. Recovery of heat from the reformer furnace outlet is important. Usually a waste heat boiler located in the transfer line from the reformer is used to generate high pressure steam. Steam is also generated between and after the shift converters. Also, a feed preheat exchanger is used to recover heat from the reformer effluent before the hot shift reaction and a feed preheat coil can be included in the heater convection section.

Catalytic reforming. High octane gasoline blending stock is produced by reforming straight run, hydrocracker, catalytic cracker and coker naphthas. A hydrogen-rich off gas is produced as a byproduct of the reforming reaction and is often used for hydrotreater hydrogen makeup supply.

Low pressure reforming has been extensively used over the past ten years because of the higher reformate yields, increased run lengths between regeneration and higher octanes achieved. However, the lower pressure increases the recycle gas compressor power requirements because the pressure ratio increases at the same recycle loop differential pressure when the absolute pressure is decreased. Minimizing the pressure drop through the recycle loop—which includes the heaters, reactors, reactor effluent heat exchangers and coolers—can result in large savings in recycle compressor horsepower. Using single-tube pass exchangers in the reactor effluent train instead of conventional two-pass exchangers reduces pressure drop significantly. Parallel heat exchangers also reduce pressure drop. Low pressure drop reactor designs can also be achieved.

The catalytic reformer process is a large fuel user because of the high temperature required for the reaction. An efficient reactor-effluent heat exchange system can minimize the external heat requirements. Recovery of heat from the reformer heater stack gas is a must. Use of a common stack for air preheat or waste heat recovery has been found to be a cost-effective energy conservation technique. (Fig. 10)

258

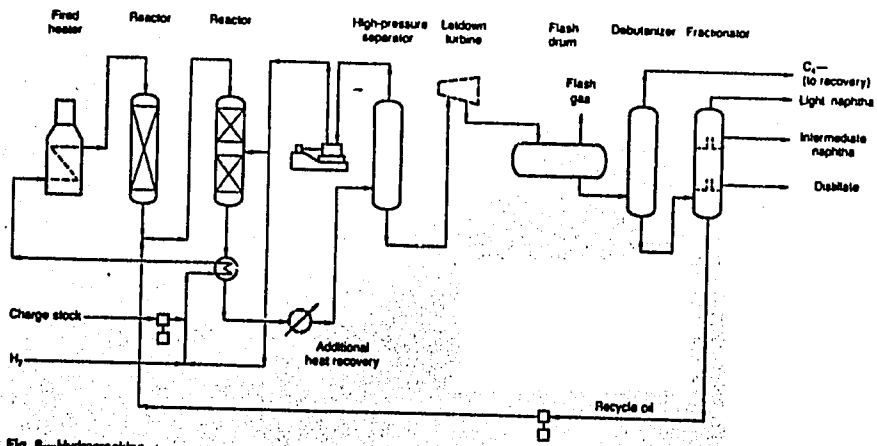

Fig. 8—Hydrocracking.

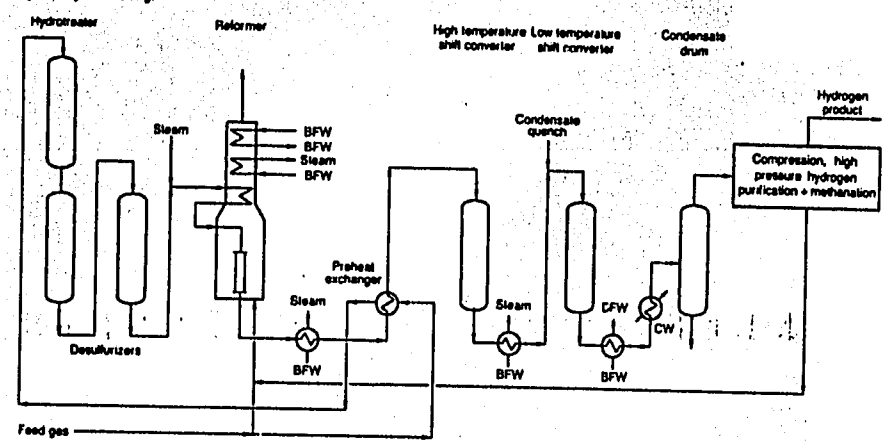

Fig. 9—Hydrogen manufacture.

Delayed coking. The coking heaters consume large amounts of fuel, most of which is obtained as byproduct fuel gas. Convection section heat recovery from the coking heater to generate steam can be used to maximize the heater efficiency (Fig. 11). Other savings include quench tower heat recovery using pumparound and product streams for steam generation, feed preheat and tower reboiling in the associated gas plant towers. A well designed heat exchange network will usefully recover the quench tower heat. The coking operation is cyclical so that the heat exchange system must be designed with flexibility to operate over the whole drum cycle.

Both the feed charge pumps and make-gas compressors are major power consumers. Pressure drop through the coking heaters is required to maintain velocities and prevent coking. The make-gas must be compressed to fuel gas pressure after acid gas treating. Not much can be done to reduce power usage here.

Live steam is consumed in the drum steam-out cycle, in the quench tower side stream and bottoms stripping and in drum heating. This steam can be produced as waste heat recovery from the quench tower and the heater stack. The process is cyclic following the drum operation. Close attention to the operating requirement can reduce steam usage significantly. The overall system design must provide sufficient flexibility in the waste heat steam generation to accommodate the peak demand.

259

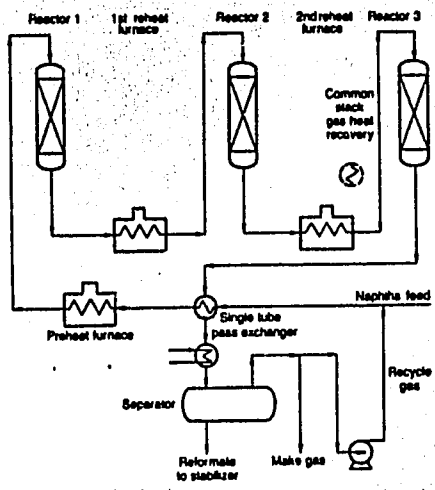

Fig. 10—Catalytic reforming.

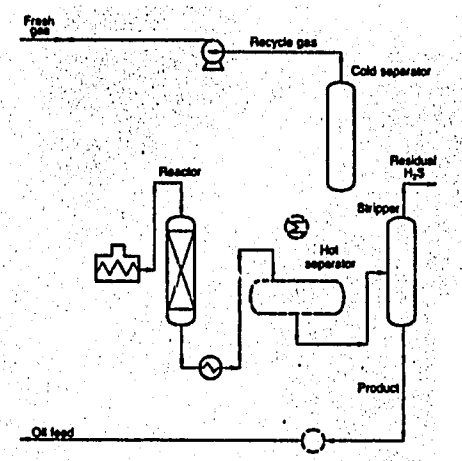

Fig. 12—Hydrotreating.

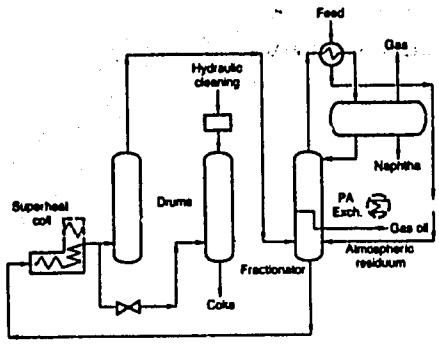

Fig. 11—Delayed coking.

Hydrotreating. Heat requirements for a hydrotreater can be reduced by using a system that has a hot separator and a cold separator (Fig. 12). In the hot separator (450 °F), a hot oil feed is separated from the reactor effluent and fed directly to a stripper column. The cold separator separates the recycle gas and light oil, which is also fed to the top of the stripper. Feed preheat is obtained by exchanging hot fractionator bottom with feed.

Acid gas removal. This type of treating is used to remove H_2S or CO_2 out of hydrogen-sulfide-rich gas streams from desulfurization, hydrocracking, coking and catalytic cracking before the gas goes into the fuel system (Fig. 13). Usually an amine solution (MEA or DEA) is used. The amine solution absorbs hydrogen sulfide in the absorber. Then the hydrogen sulfide is stripped from the solution in the reactivator and goes to a Claus unit. The regeneration reboiler requires considerable steam. One method of reducing the steam usage in the reactivator is to split the absorber and reactivator into two sections so that the semilean solution from the top section of the reactivator is used in the lower section of the absorber and the lean amine solution from the bottom of the reactivator is used in the top section of the absorber. This in effect results in double usage of the reboiler stripping vapors; i.e., reboiler vapor is used first to strip the lower section reactivator to produce the lean amine and then in the top section to produce the semilean amine. This approach has been used for years in carbon dioxide removal systems of hydrogen plants. Heat exchange between the rich and the semirich amine solution from the absorber and the lean and semilean solution from the reactivator can also reduce steam loads to the reboiler.

260

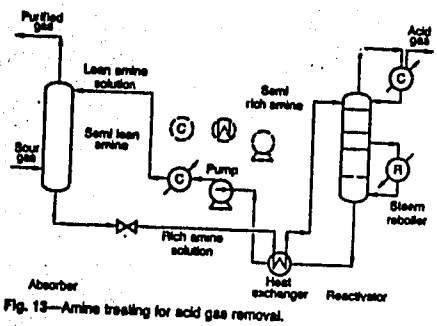

Fig. 13—Amine treating for acid gas removal.

IMPLEMENTATION

Once energy saving projects are identified, some type of priority level must be established. There are seldom enough capital resources to tackle all projects. Two approaches to giving priorities to projects are the cost/benefit ratio and the ranking of projects by total energy savings. A combination of these considerations is usually employed. Most energy conservation projects can compete on their own merits against other capital expenditures, particularly as the price of fuel and power continues escalating at faster rates than the remainder of the economic sector. Space limitations within the plot area often become the overriding consideration in plants where space has not been provided for future modifications. Downtime can also be critical. This can be minimized by preinstalling and piping up retrofit equipment while the unit is in operation and making final tie-ins during a shutdown as part of normal turnaround schedule. Advanced planning and use of construction personnel who are experienced in working around operating equipment are a must to ensure that no surprises or premature shutdowns are required.

SUMMARY

An energy audit is a useful tool for assessing energy usage within a plant or individual unit. Comparison of measured energy usage with guideline values for the industry or particular processes will indicate energy inefficiency. Energy efficiency is a function of plant age, operating severity, feedstock type and the skill level of the operational personnel. As part of the audit, means for improving energy efficiency should be identified. Both capital costs for process modifications to improve energy usage and resulting operating cost savings can be quantified. With this information, individual energy saving projects can be evaluated along with other capital improvements to determine the merits of implementation. Generally speaking, most energy conservation projects can be justified by operating cost savings, particularly if future energy costs are considered. Physical space limitations within the plant and the cost of downtime for plant modifications must be considered.

261

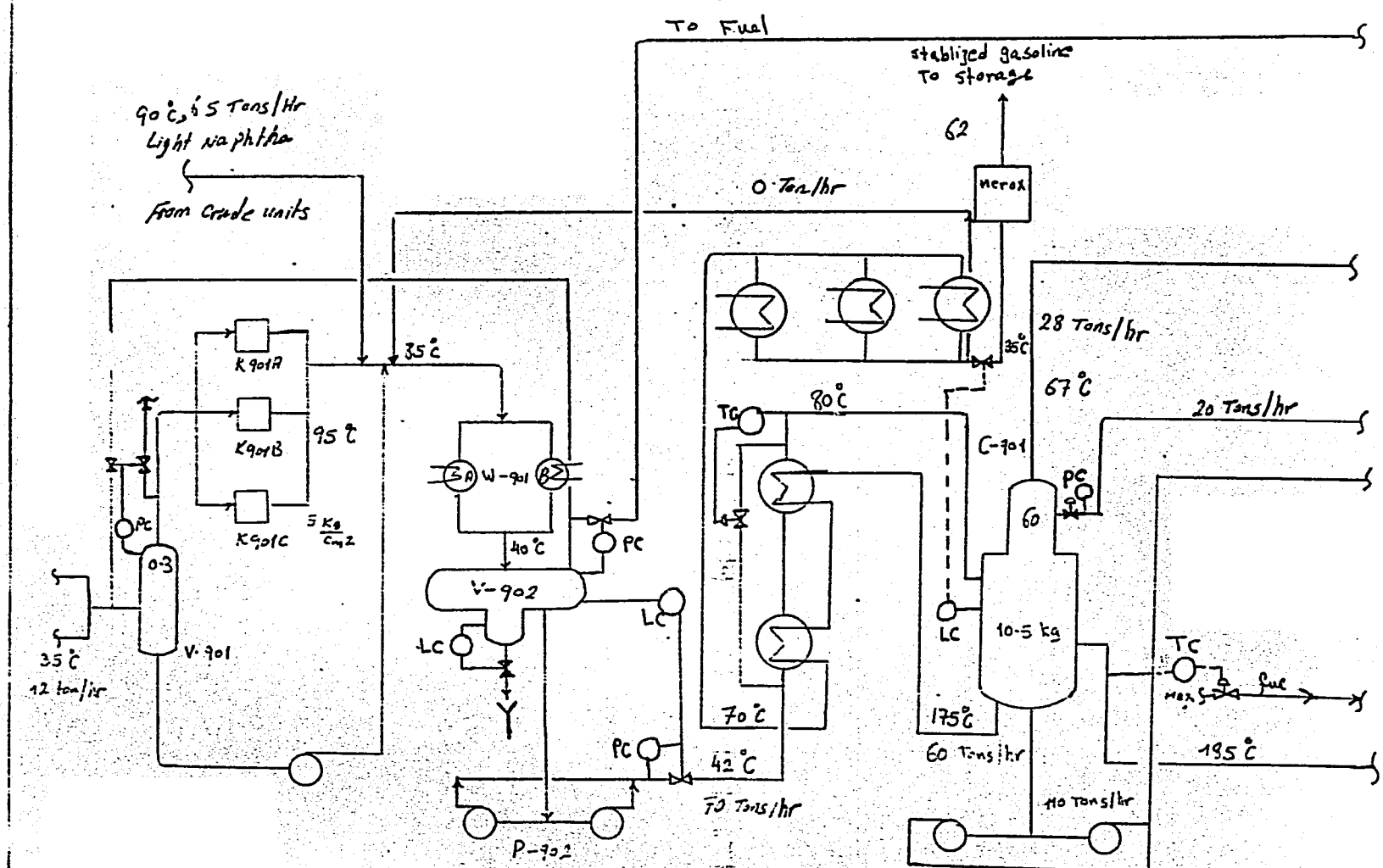
To Fual
stabliged gasoline
To storage
62
90 °C, 5 Tons/Hr
Light naphtha
From Crude units
0 Ton/hr
merox
35 °C
28 Tons/hr
67 °C
K 901A
K901B
K901C
95 °C
5 Kg/Cm2
W-901
40 °C
PC
V-902
LC
TC
80 °C
C-901
20 Tons/hr
60
10-5 kg
0-3
V-901
35 °C
12 ton/hr
70 °C
175 °C
60 Tons/hr
42 °C
70 Tons/hr
P-902
40 Tons/hr
195 °C
fuel
max 5

262.

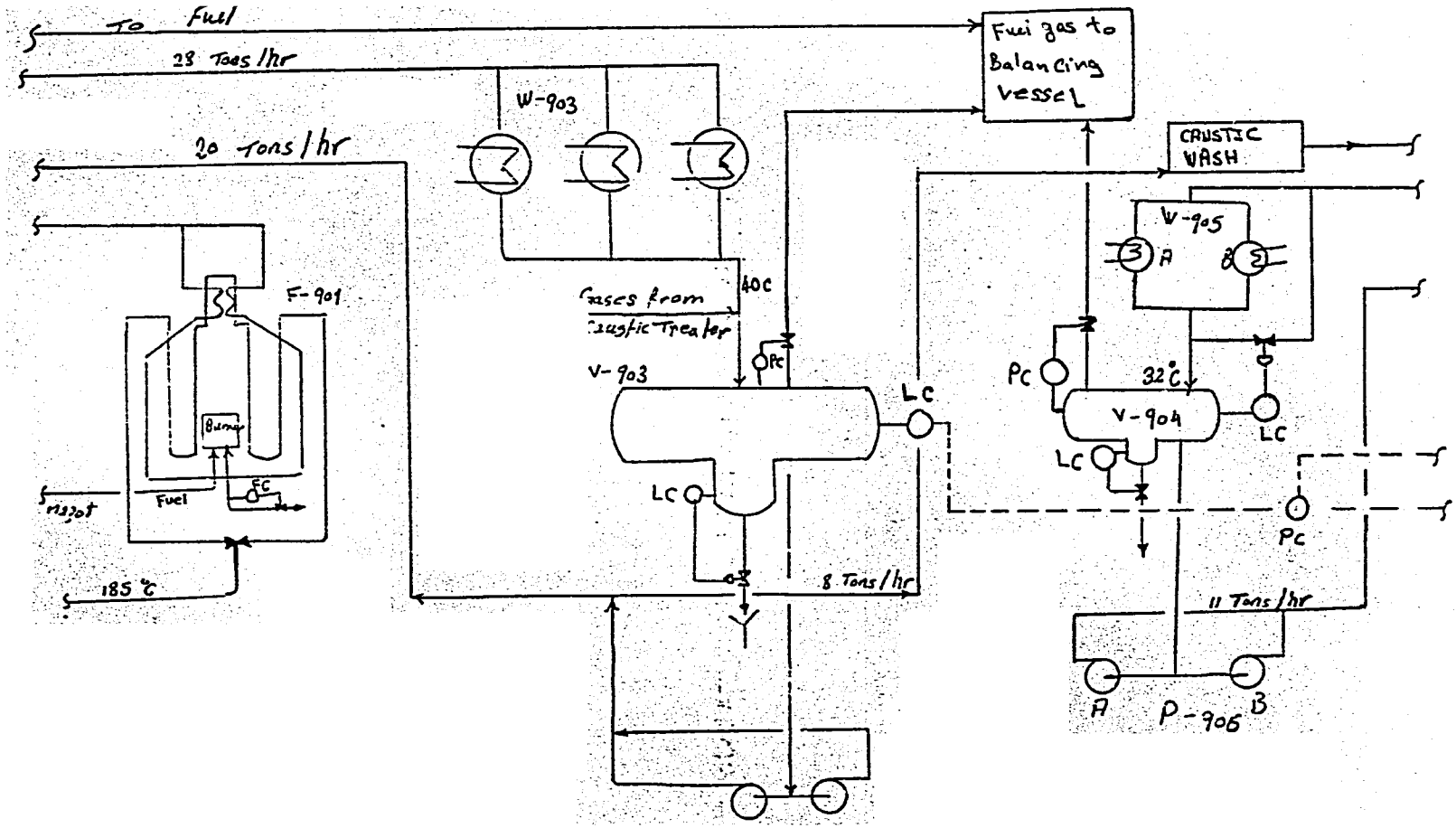
To Fuel
28 Tons/hr
Fuel gas to Balancing vessel
W-903
20 tons/hr
CAUSTIC WASH
W-905
A
F-901
Gases from Caustic Treater
40C
V-903
PC
LC
PC
32°C
V-904
LC
LC
LC
Burner
Fuel
FC
Air
185 °C
8 Tons/hr
11 Tons/hr
PC
A
P-906
B

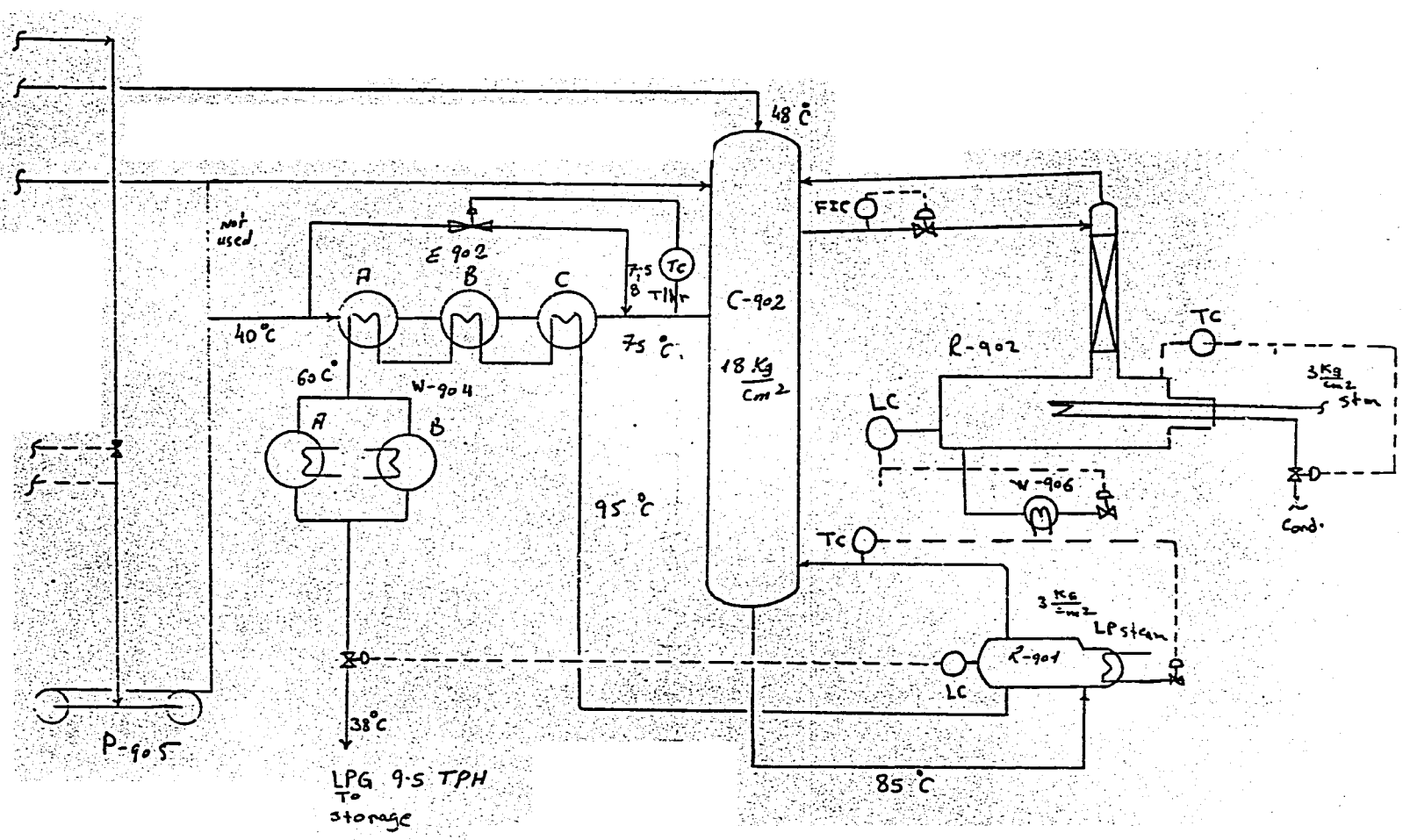
48 °C
not used
E 902
A
B
C
7.5 °C
TC
C-902
40 °C
75 °C
18 Kg/cm²
FIC
R-902
TC
3 Kg/cm² stm
LC
W-904
60 °C
A
B
W-906
Cond.
95 °C
TC
3 Kg/cm² LP steam
R-901
LC
38 °C
P-905
LPG 9.5 TPH To storage
85 °C

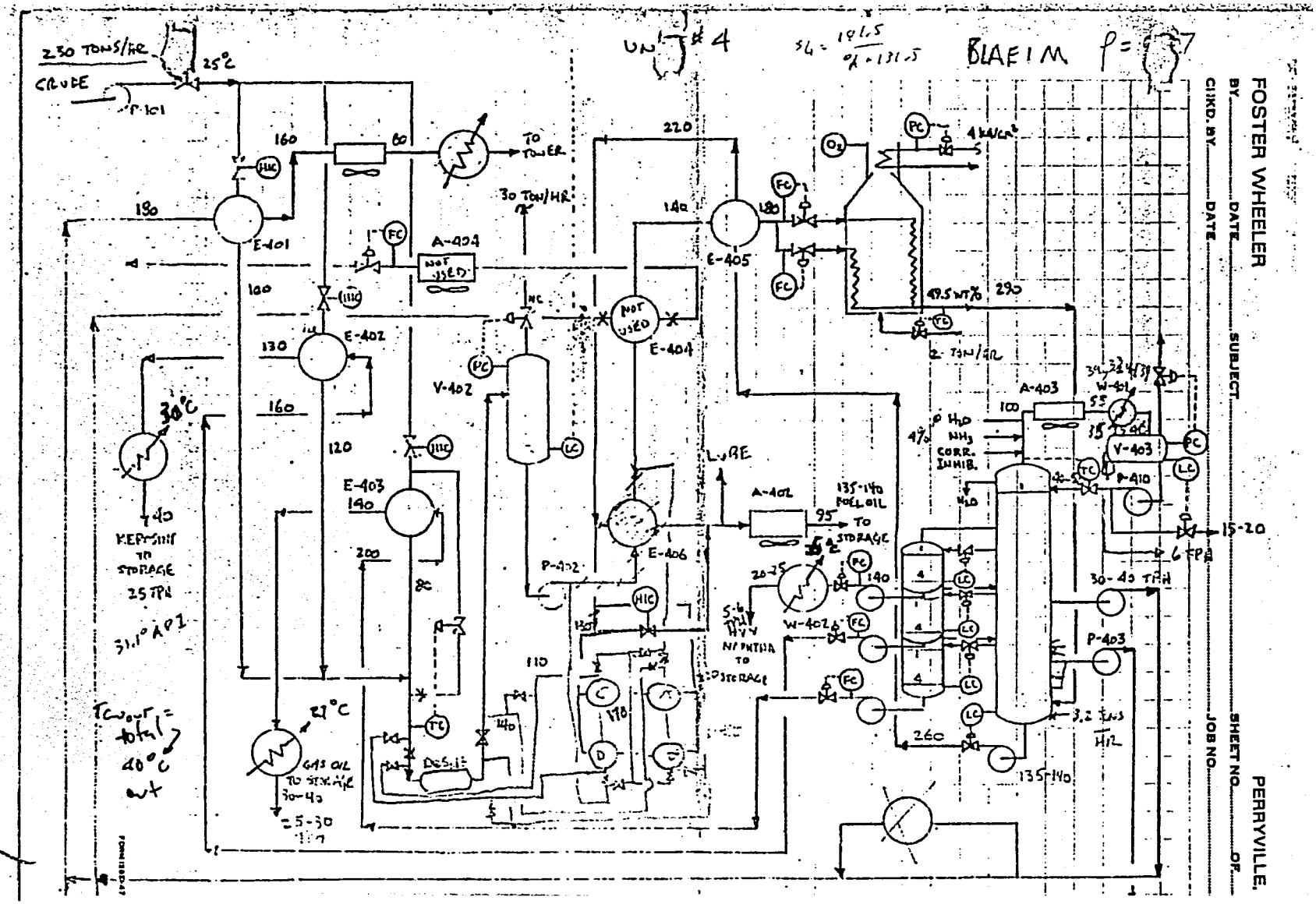
230 TONS/HR
CRUDE
25°C
P-101
160
80
TO TOWER
30 TON/HR
180
E-401
A-404
NOT USED
100
E-402
130
160
120
30°C
E-403
140
KEROSINE TO STORAGE
25 TPH
31.1° API
40
200
V-402
P-402
110
140
27°C
GAS OIL TO STORAGE
30-40
=5-30
DESUL.
220
140
E-405
180
E-404
NOT USED
E-406
LUBE
A-402
135-140 FUEL OIL
95
TO STORAGE
W-402
5-6 TPH HVY NAPHTHA TO STORAGE
140
260
135-140
49.5 WT%
290
2 TON/HR
4 kg/cm²
A-403
100
4% H2O NH3 CORR. INHIB.
V-403
P-410
15-20
6 TPH
30-40 TPH
P-403
3.2 TPH H2
UNIT #4
BLAEIM
FOSTER WHEELER
PERRYVILLE
BY
CHKD. BY
DATE
SUBJECT
JOB NO.
SHEET NO.
OF

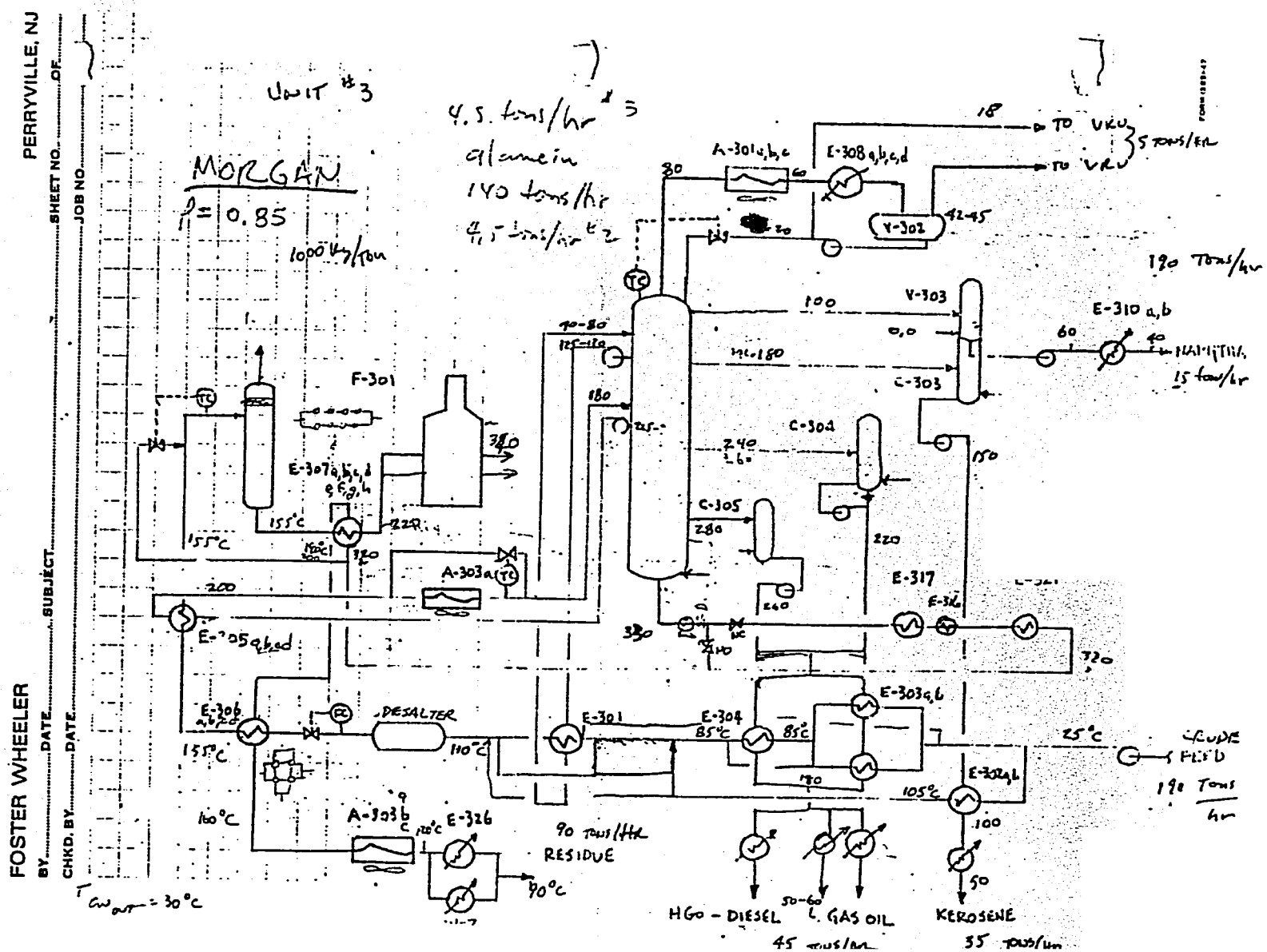
PERRYVILLE, NJ
FOSTER WHEELER
UNIT #3
MORGAN
ρ = 0.85
1000 kg/ton
4.5 tons/hr #3
alumina
140 tons/hr
4.5 tons/hr #2
TO VRU
5 TONS/HR
V-302
190 Tons/hr
V-303
E-310 a,b
C-303
C-304
C-305
E-317
F-301
E-307a,b,c,d & f,g,h
A-301a,b,c
E-308a,b,c,d
A-303a
E-305a,b,c,d
E-306
DESALTER
E-301
E-304
E-303a,b
E-302a,b
A-303b,c
E-326
90 TONS/HR RESIDUE
HGO - DIESEL
GAS OIL
KEROSENE
45 tons/hr
35 tons/hr
15 tons/hr
CRUDE FEED
190 Tons/hr
$T_{cw\ out}$ = 30°C

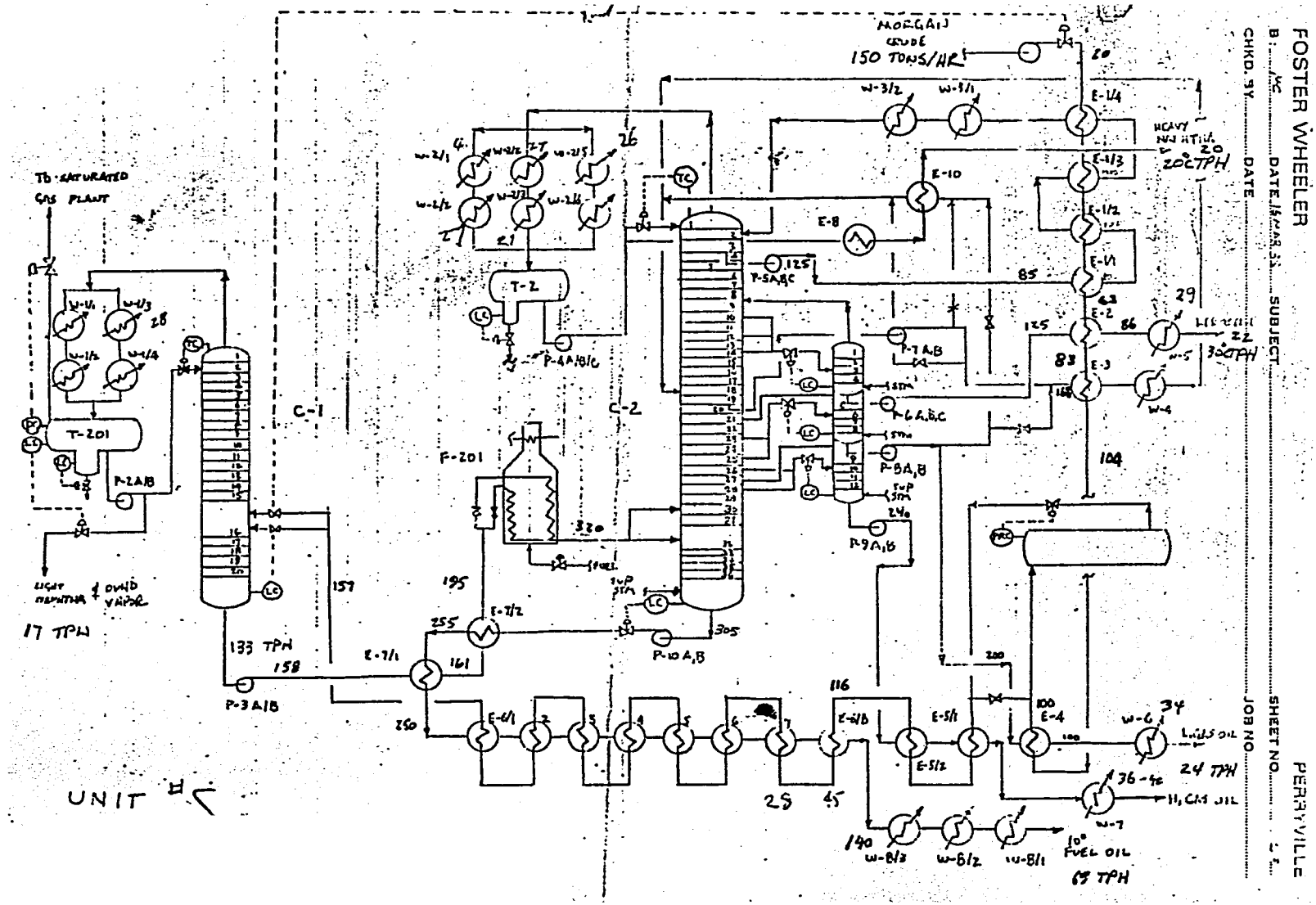
FOSTER WHEELER
PERRYVILLE
MORGAN CRUDE
150 TONS/HR
HEAVY NAPHTHA
20 TPH
LIGHT NAPHTHA
30 TPH
LIGHT NAPHTHA & OVHD VAPOR
17 TPH
133 TPH
LIGHT OIL
24 TPH
HEAVY OIL
FUEL OIL
68 TPH
T-201
T-2
C-1
C-2
F-201
P-2A/B
P-3A/B
P-4A/B/C
P-5A,B,C
P-6A,B,C
P-7A,B
P-8A,B
P-9A,B
P-10A,B
E-1/1
E-1/2
E-1/3
E-1/4
E-2
E-3
E-4
E-5/1
E-5/2
E-6/1
E-6/2
E-7/1
E-7/2
E-8
E-10
W-1/1
W-1/2
W-1/3
W-1/4
W-2/1
W-2/2
W-2/3
W-2/4
W-2/5
W-3/1
W-3/2
W-4
W-5
W-6
W-7
W-8/1
W-8/2
W-8/3
UNIT H