MALAWI, AFRICA
CHIKWAWA-BANGULA

PN-ABA-158

ROAD M8
50.9 MILES

Causes of Road Failure and Proposals for Restoration and Reconstruction

U.S. Department of State

Agency for International Development

by

U.S. Department of Transportation

Federal Highway Administration

TABLE OF CONTENTS

Page No.

Executive Summary

Introduction

Causes of Failure

Short-Term Solution

Long-Term Solution

Load Limits

Maintenance

Training of Malawian Engineers

Cost Summary

Rehabilitation and Reconstruction

Time Schedule

Typical Section (Reconstruction)

Condition Survey--Evaluation--Recommendations

Introduction

History

Chapter I - Condition Survey

Chapter II - Structural Evaluation

Chapter III - Short-Term and Long-Term Solutions

Chapter IV - Stage Construction

Chapter V - Traffic Analysis and Vehicle Loads

Chapter VI - Quality Control and Specification Compliance

Chapter VII - Training

Chapter VIII - Maintenance

Chapter IX - Additional Data Requirements

Chapter X - Photographs

TABLE OF CONTENTS
(continued)

Page No.

Appendix A - DMJM/Teer Site Meetings

Appendix B - Pavement FAIR Condition, Stations

Appendix C - Pavement MARGINAL Condition, Stations

Appendix D - Pavement POOR Condition, Stations

Appendix E - Pavement Needing Total RECONSTRUCTION, Stations

Appendix E-1 - DMJM Table E XIV, Preliminary Soils/Materials Investigation Physical Testing Matrix

Appendix E-1-a - CBR Embankment Histogram

Appendix E-1-b - Density Embankment Histogram

Appendix E-1-c - Optimum Moisture Embankment Histogram

Appendix E-1-d - Liquid Limit Embankment Histogram

Appendix E-1-e - Plasticity Index Embankment Histogram

Appendix E-1-f - Percent Passing No. 200 Sieve Histogram

Appendix E-2 - DMJM, April 1974, Soils Information

Appendix E-3 - Froehling & Robertson, Inc., March 4-5, 1974, B-1108, Marshall Mix Designs

Appendix F - Overlay Thickness Requirements and Stations

Appendix G - Patching Requirements Stations

Appendix H - For Sealing Stations

Appendix I - Cost Estimates
Short-Term
Long-Term

Appendix J - Alternate Pavement Structure for RECONSTRUCTION

Appendix K - Typical Section (Reconstruction)

Appendix L - Grade Change (Raise) Stations

TABLE OF CONTENTS
(continued)

Page No.

Appendix M - Specifications for Asphaltic Concrete

Appendix N - Specifications for Crushed Aggregate Base

Appendix O - Specifications for Excavation and Embankment

EXECUTIVE SUMMARY

A. Introduction

Malawi, Africa, Road M8 between Chikwawa and Bangula (50.9 miles) was designed by U.S. consulting firm Daniel, Mann, Johnson and Mendenhall (DMJM) and was constructed between October 1974 and February 1977 by U.S. firm Nello L. Teer. DMJM were responsible for overall construction supervision (contract compliance). The Government of Malawi (GOM) is responsible for maintenance of this road.

Pavement failures occurred during construction, but were corrected. Soon after the project was completed, cracks in the pavement developed progressing to total failure inspite of crack sealing and patching.

The present condition of the pavement is as follows:
(Mileage within 0.1 miles)

26.5 miles / 42.5 km: In fair condition, probably lasting 2-5 years.

10.0 miles / 16.1 km: In marginal condition and subject to failure within 3 years.

3.6 miles / 5.8 km: In poor condition and subject to failure during the 1981/1982 wet season.

10.8 miles / 17.4 km: Total and partial destroyed pavement sections, requiring reconstruction.

7.4 miles (12.0 km): Pavement totally destroyed and lost.

3.4 miles (5.4 km): 20-30 percent of pavement destroyed; rest severely distressed, subject to imminent failures.

B. Causes of Failure

1. Pavement was underdesigned:

   a. Subgrade soils were weaker than anticipated.

   b. Subbase was tested under wrong condition (dry instead of soaked).

c. The sand asphalt strength coefficient was apparently overestimated, which resulted in an inadequate thickness for the sand asphalt layer.

2. Design changes during construction including the elimination of the subbase in certain areas, which further reduced the pavement strength.

3. Apparent lack of or poor quality control during construction.

4. Truck traffic exceeding Malawi load limits for this road, which was established at 6.1 tonnes (metric).

C. Recommendation

1. Short-Term Solution

The timespan for the short-term solution is between now and the onset of the rainy season in November. (Now!)

a. Protect the existing pavement against deterioration and retard existing progressive deterioration. (40.1 miles = 64.4 km).

b. Make destroyed sections usable for traffic during the rainy season (10.8 miles = 17.4 km).

The objectives can be accomplished provided funding, manpower, material, and equipment can be made immediately available. The following work is proposed: (The cost is given in dollars and kwachas; $1 = 0.85 kwachas)

(1) Shoulder Blading: 50 percent of the shoulders are too high, causing ponding of water on the pavement.

Work duration: 10 days

Cost: $4,710 (K4,000)

Who: GOM

During discussions with GOM officials, assurance was given that this work will be accomplished.

(2) Patching of Depressions and Potholes on Existing Pavement:

Work duration: 3 months

Cost: $82,360 (K70,000)

Who: GOM

Presently GOM maintenance forces are successfully patching, proceeding north from Bangula. The present effort needs to be tripled in order to complete this work before the rainy season. The GOM officials (Mr. Mwalwenje, Engineer in Chief) are confident that this work can be accomplished in time provided U.S. funds are made available.

(3) Fog Seal (43.4 miles = 70.2 km): All existing pavements should receive a light application of asphalt (fog seal) to fill cracks and to rejuvenate the existing sand asphalt pavement surface.

Work duration: 12 days

Cost: $140,000 (K119,000)

Who: GOM

Lack of funds will most likely prevent the accomplishment of this work.

(4) Emergency Overlay of the "Poor Pavement" (3.6 miles = 5.8 km):

Cost: $370,600 (K315,000)

Since it is recognized that funding for this work is not available and the time remaining is too short, the overlay is impossible to accomplish. The "poor pavement" sections are included in the reconstruction portion.

(5) Make Destroyed Pavement Usable for Traffic During the Rainy Season

This work would consist of blading and reworking areas devoid of any pavement and the placement of a 3" gravely material over the affected areas.

Work duration: 20 days

Cost: $197,650 (K168,000)

Who: GOM

Lack of funding will most likely reduce this work to reworking and blading the affected areas for better surface drainage.

Total Short-Term Solution: $795,320 (K676,000) ?

2. Long-Term Solution

This solution, recommended for implementation during the 1982 dry season, would make the 50.9 miles uniformly usable for the anticipated traffic over the next 10 years. This would allow for 8.2 tonnes (metric) single axle loads. On this road, the axle loads were limited to 6.1 tonnes. If the work for the long-term solution is carried out in two dry seasons (1982 and 1983), extensive additional pavement destructions (up to 10 miles) can be expected, possibly doubling the present estimated cost for reconstruction. ?

This work involves:

a. Reconstruction of 14.6 miles (23.5 km):

(1) Removal of approximately 3 feet (depth) of the existing roadbed for 12.7 miles (20.4 km).

(2) Raising the present road grade between 1 foot and 3 feet for 1.9 miles (3.1 km) to prevent overtopping during floods.

(3) Providing the 14.6 miles with an improved pavement structure as follows (bottom to top):

6" (15.25 cm) sand blanket

24" (61 cm) select material

4" (10 cm) crushed stone base

3" (7.6 cm) asphalt concrete

Cost without Asphalt?

Cost: $17,088,000 (K14,524,000)

b. Rehabilitation (overlay) of the remaining 36.5 miles (58.6 km) road sections with:

(1) Asphalt concrete (1" - 3.5") - 27.6 miles (44.4 km).

(2) Single surface treatment (chipseal) - 8.9 miles (14.2 km).

Cost: $5,384,000 (K4,576,000)

Reconstruction and Rehabilitation (a + b)

Work duration: 7-8 months

Cost: $22,472,000 (K19,100,000)

Who: Design: GOM. The major design work was accomplished by the Federal Highway Administration (FHWA) team. The remaining work is relatively "straight forward" consisting of field work (surveys, material exploration and testing) quantity computations and schedules, specifications, contract assembly, advertising, bid evaluation, and award. The FHWA team concluded that GOM is capable of doing this work. It is, however,

advisable to have one U.S. engineer with the GOM design team for 1 month to assist in the design and review of the contract documents.

c. Construction: By contract. The magnitude of this project would make other methods, like force account or by GOM forces, uneconomical and inefficient.

d. Construction Supervision: The GOM assisted by a two man U.S. team. The GOM has earmarked a capable engineer for this project. There are also men available with construction experience, but not familiar with inspection procedures and techniques.

Therefore, a U.S. project engineer and senior construction inspector is recommended to work with and train Malawian personnel, on the job.

3. Load Limits

Enforce GOM legal load limits (8.2 tonnes), otherwise the pavement life will be less than 10 years.

4. Maintenance

The GOM, with adequate funding, is capable to perform required road maintenance on its road system. This was observed on the M8 and M1 roads. Once M8 is rehabilitated and reconstructed, $50,000/year should be budgeted for maintenance.

5. Training of Malawian Engineer in USA

a. One engineer in a State or Federal highway administration laboratory for 1 month to learn the latest material testing techniques.

b. One maintenance engineer in a State (Texas) with similar conditions as Malawi for 6 weeks.

The repair of this road has "top priority" according to GOM officials. In case the $22,472,000 (K19,100,000) required for reconstruction and rehabilitation cannot be made available, the rehabilitation should be performed in order to protect and save the "marginal and fair" pavements for a total length of 36.5 miles. The cost for this work is $5,384,000 (K4,576,000).

Cost Summary

A. Short-Term Work (before 1981/1982 rainy season)

$795,000

K676,000

B. Long-Term Work (after 1981/1982 rainy season)

1. Rehabilitation 36.5 miles (58.6 km)	$ 5,384,000 K 4,576,000
2. Reconstruction 14.4 miles (23.2 km)	$17,088,000 K14,524,000
	$22,472,000 K19,100,000
GRAND TOTAL: (short-term and long-term)	$23,267,000 K19,776,000

TYPICAL SECTION
RECONSTRUCTION

(Not to scale)

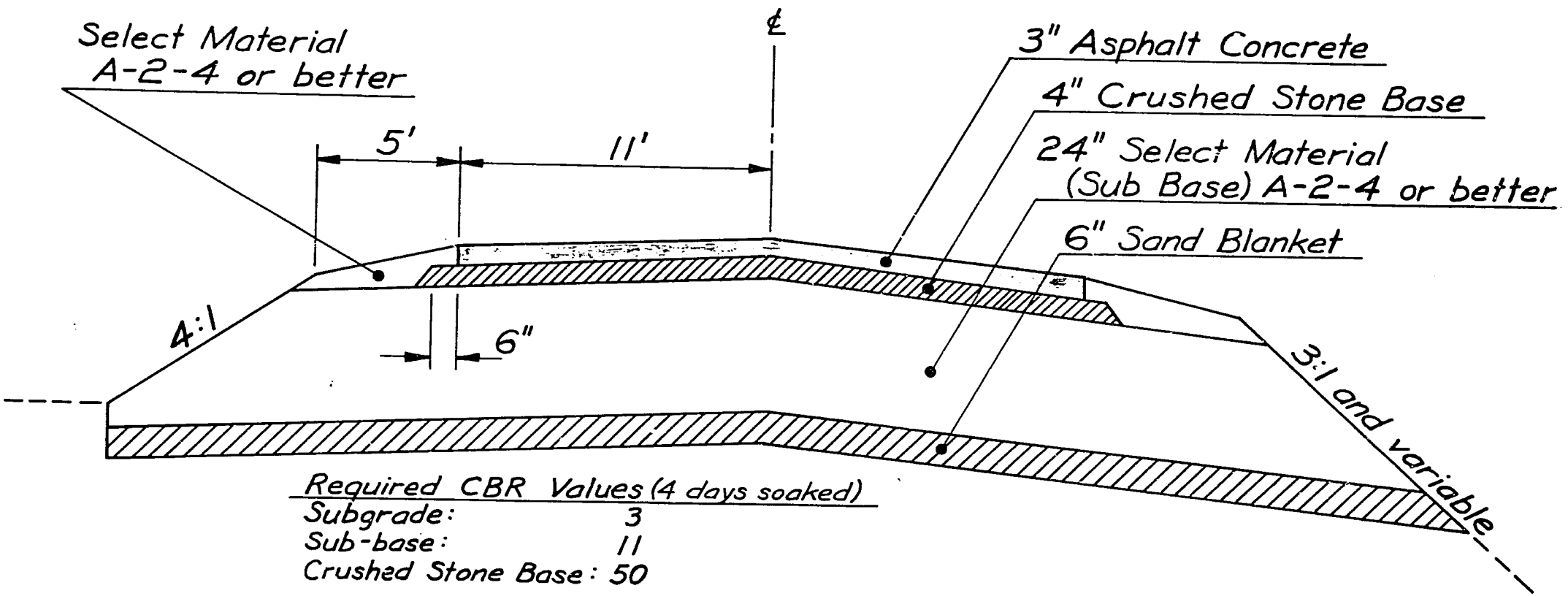

Required CBR Values (4 days soaked)	
Subgrade:	3
Sub-base:	11
Crushed Stone Base:	50

Considering the overlay of the other sections, the top of the reconstructed section is 3 inches above the original grade. Excavation is 34 inches below original grade. This 37 inch section is required to protect against the effects of swelling and shrinking of the expected poor (A-7-6 and A-7-5) subgrade soils.

RECONSTRUCTION & REHABILITATION (By contract)

TIME SCHEDULE

	October 1.	Jan. 1, 1982	Feb.	Mar.	Apr.	May	June	July	August	Sept.	Oct.	Nov.	Dec.	Jan. 1, 1983
Design														
Advertize, Open Bids, Award.														
Mobilize														
Excavation	Minimum Production Rate: 2500 m^3/day													
Embankment	" " " 300 m^3/day													
Sand Blanket	" " " 1300 m^3/day													
Select Material	" " " 2000 m^3/day													
Crushed Stone Base	* This also includes crushing stone for the Asphalt Concrete. Crushing should start July 1, 1982													
Pavement	Minimum Production Rate: 620 to./day													
Shoulder Material	" " " 110 m^3/day													

to. = metric tons

* Crushed Stone: Minimum Production Rates

a. Crushing for Base and Pavement: 1000 to./day

b. Laydown for Base: 200 m^3/day

MALAWI, AFRICA
ROAD M-8 CHIKWAWA TO BENGULA
LENGTH 51 MILES (80 KM)

CONDITION SURVEY - EVALUATION - RECOMMENDATION

Introduction

The Agency for International Development (AID) requested a Federal Highway Administration (FHWA) team to assess damage and recommend corrective actions on the Chikwawa to Bengula section of the M-8 highway in Malawi. The team consisted of Messrs. Otto Mayr and Emory Richardson from the FHWA Direct Federal Office. A briefing was given to the team by Mr. Don Reilly, REDSO Engineer in Nairobi, Kenya on September 10-11, 1981. The team flew to Blantyre, Malawi on September 12 to begin the physical survey of the road. A driver (Mr. Eleson Lefani) and vehicle were provided by AID. Mr. Lefani was knowledgeable of the area and was very helpful.

The physical inventory was made using the stations (feet) of the original design plans of Consultants Daniel, Mann, Johnson and Mendenhall (DMJM). The field evaluation and interpretation was completed on September 29 in Lilongwe. The team departed from Blantyre, Malawi on September 30. During October 1-7, debriefing meetings were held with the REDSO engineering staff in Nairobi, Kenya. Upon return to the United States, the FHWA team finalized the report.

History

The road was designed by A&E Consultants DMJM from the USA and was constructed by Nello L. Teer, a USA construction firm. Actual construction of the project began in October 1974 and was completed in February 1977. According to

correspondence between the consultants, contractor, and the Government of Malawi (GOM), numerous construction problems were encountered as follows:

1. Contractor lacked water trucks, dump trucks, and the asphalt plant was in need of repairs. (See Appendix A-1 and 2).

2. Shoulder erosion occurred. (See Appendix A-3).

3. Inadequate compaction supervision and improper rolling techniques noted on sand-asphalt mix. (See Appendix A-5).

4. During construction, structural failures occurred. (See Appendix A-6 and 7).

5. Sand-asphalt pavement failures occurred. (See Appendix A-13, 14, and 19).

6. Design of sand-asphalt in question. (See Appendix A-8, 9, 10).

7. Use of low CBR, non-specification subbase materials. (See Appendix A-11, 12).

8. The GOM indicates reconstruction is due to faulty workmanship. (See Appendix A-15).

9. Contractor indicates reconstruction due to faulty design. (See Appendix A-16).

10. Request for asphalt grade change from 40-50 to 80-100 penetration. (See Appendix A-17, 18).

11. Teer had written that all field construction completed. (See Appendix A-20).

The above 11 statements were taken from "Site Meeting" documentation (AID files). Appendix A identifies:

1. correspondence number;

2. date; and

3. author.

For more detailed review, see AID files in Lilongwe, Malawi.

Concern for the pavement condition has existed during construction to the present time. This is documented by correspondence, physical testing of the road by GOM, and the REDSO visual observations.

In the FHWA team's opinion, there is approximately 22 percent (11 miles) of this road in rough, almost unserviceable condition. This report attempts to address the following:

1. Why is the road in this condition?

2. How to avoid the same condition in the future?

3. How to correct the existing condition?

Overlay and reconstruction structural requirements were taken from the "AASHTO Interim Guide for Design of Pavement Structures, 1972."

I. Condition Survey

Four pavement conditions were established by the FHWA team. In order to categorize the existing road, the following four groups were established:

1. Pavement in FAIR condition - 26.5 miles (42.5 km).

2. Pavement in MARGINAL condition - 10.0 miles (16.1 km).

3. Pavement in POOR condition - 3.6 miles (5.8 km).

4. Pavement requiring RECONSTRUCTION - 10.8 miles (17.4 km).

The road condition categories were established from the following information:

A. Study and evaluation of the existing plans and documents which included:

1. The DMJM Technical and Economic Feasibility, Chikwawa-Bangula Road, Malawi, January 1973.

2. The DMJM Final Report September 1977, Republic of Malawi, Ministry of Works and Supplies, Chikwawa-Bangula Road Project, MOW&S Contract 5/74, AID Loans 690-H-002 & 690-W-007.

3. Republic of Malawi, Ministry of Works and Supplies, M-8 Chikwawa-Bangula Road, Report July 1981. This report contained:

   a. Benkelman beam deflection data.

b. Sand-asphalt extraction information.

- Gradation
- Asphalt percent

c. Condition evaluation of the road into:

- Sections showing no cracks (green)
- Sections showing small cracks no failures (blue)
- Sections showing large cracks and failures (red)

d. The GOM recommendations for remedial action.

e. Evaluation of 22 test pits taken from various sections of the road.

4. The DMJM/Teer site meeting memorandums. These memorandums were the only construction data available to the FHWA team. (See Appendix A).

5. Information received after the FHWA team's return to the United States. Information was supplied by AID Washington, D.C. The data received included the following:

a. Froehling and Robertson, Inc., Marshall mix designs for Chikwawa-Bangula, March 4 & 5, 1974. Record No. B-1108. (See Appendix E-3)

b. DMJM, April 1974, Soils Information containing: (See Appendix E-2)

- Embankment Soils Analysis
- Subbase Pit Utilization
- Subbase Pit Sketches
- Base Pit Utilization
- Base Pit Sketches
- Pit Location and Strip Maps

B. On-site review on September 18, 1981, with Southern Regional Engineer, Gordon McKenzie and his replacement Mr. Chisi. Mr. McKenzie briefed the FHWA team on the maintenance that has been accomplished since the construction of the road.

C. Visual observations were made by the FHWA team. Using the information furnished by REDSO and the personal observations by the team was the basis for establishing the four separate pavement conditions. The appendices contain the station-by-station breakdown of the various pavement categories.

D. Summary of the Condition Survey

1. Pavement in FAIR condition - 26.5 miles (42.5 km). (See Appendix B)

   Characteristics found in FAIR conditions.

   a. Hairline or small cracks.

   b. No visual distortion.

   c. Benkelman beam deflections less than 0.90 mm.

d. Roadway drainage adequate, except in areas having shoulders higher than the existing road surface.

e. Adequate pavement structural thickness.

2. Pavement in MARGINAL condition - 10.0 miles (16.1 km). See Appendix C.

Characteristics found in MARGINAL conditions.

a. Obvious large cracks, 1/8 inch and larger.

b. Some distortion as measured visually with a string line.

c. Benkelman beam deflections range from 0.90 mm to 1.65 mm.

d. Water ponding on the pavement.

e. Inadequate pavement structural thickness.

3. Pavement in POOR condition - 3.6 miles (5.8 km). See Appendix D.

Characteristics found in POOR conditions.

a. Alligator and block cracking apparent.

b. Obvious depressions and bathtubs in the pavement.

c. Benkelman beam deflections greater than 1.65 mm.

The POOR pavement condition category is included for reconstruction. In order to maintain the POOR section, it is necessary to overlay with asphaltic concrete before the beginning of the wet season.

Due to lack of funds and the critical timing, we assumed this section would deteriorate to the RECONSTRUCTION classification after the 1981-1982 wet season.

4. Pavement requiring RECONSTRUCTION - 10.8 miles (17.4 km). See Appendix E.

   Characteristics found in the RECONSTRUCTION category.

   a. Pavement totally missing or cracked beyond repair.

   b. Subgrade is visible.

   c. Roadway drainage poor, especially during the wet season when vehicles have been reported to be stuck in the middle of the road.

II. Structural Evaluation

A. Subgrade and Embankment Soils

1. DMJM, Technical and Economic Feasibility Report, January 1973 (preconstruction data). Page II-15 indicates the subgrade soils used for the structural design thickness had a California Bearing Ratio (CBR) value of 6. (See Appendix E-1, Table E-XIV).

   a. The CBR values on 18 samples averaged 2.8 (Appendix E-1-a).
   b. Density averaged 116.9 lbs/cu. ft. (Appendix E-1-b).
   c. Optimum moisture content averaged 12.7 percent (Appendix E-1-c).
   d. Liquid Limit averaged 33 (Appendix E-1-d).
   e. Plasticity Index averaged 16 (Appendix E-1-e).

f. Percent passing No. 200 sieve (.075 mm) averaged 46 percent (Appendix E-1-f).

DMJM, Chikwawa-Bangula Soils Information, April 1974 contained the following: (preconstruction data)

a. Density averaged 112.1 lbs/cu. ft. (Appendix E-1-b).

b. Optimum moisture content averaged 12.9 percent (Appendix E-1-c).

c. Liquid Limit averaged 37 (Appendix E-1-d).

d. Plasticity Index averaged 17 (Appendix E-1-e).

e. Percent passing No. 200 sieve (.075 mm) averaged 8.8 percent* (Appendix E-1-f).

* The values reported here are for dry sieve analysis of the percent passing the No. 200 sieve.

2. Government of Malawi, Ministry of Works and Supplies, M8-Chikwawa-Bangula Report, July 1981, contained the following subgrade data: (postconstruction data)

° CBR of 4 assigned to the distressed sections for reconstruction.

° Benkelman beam deflections every 200 metres.

° Twenty-two test pits taken throughout the project.

a. Percent passing No. 200 sieve average 49.

b. Liquid Limit average 54 and two non-plastic.

c. Plasticity Index average 31 and two non-plastic.

d. The in situ moisture contents in the failed areas are greater than the optimum moisture contents.

e. The compaction density in a number of the pit samples did not meet 95 percent of the maximum density (AASHTO, T-180).

3. FHWA Team Conclusions and Recommendations - Subgrade and Embankment Soils

Conclusions:

The failures occurred because of an inadequate structural section to carry the traffic volume and vehicular load. The inadequate section is due to one or more of the following:

a. Lack of subbase, base, and surfacing thickness to carry the load.

b. Subgrade soils had less strength (CBR 2.8) than the design CBR of 6.

c. Underestimating traffic volume or allowing overloaded vehicles to use the road.

d. Poor techniques or inadequate inspection may have contributed to the lack of density. The CBR values are directly related to the density of soils. The low densities with high moisture contents yield lower CBR values.

Recommendations:

a. No further laboratory testing is needed at this time for structural design evaluation.

b. The GOM should obtain additional Benkelman Beam deflection tests when the soils are at their weakest (wet) condition. This should occur at the conclusion of the 1981-1982 wet season. The wet season deflections should be analyzed and compared to the FHWA team's September 1981 evaluation. The FHWA team used GOM deflection data taken in July 1981. In order to compensate for the dry season deflections, the team assumed a 25 percent deflection increase over the July 1981 readings. Most of the materials tested contained clay. Clays have a high dry strength and very low wet strength.

c. A CBR of 3 should be used for the structural design requirements in the RECONSTRUCTION areas.

d. Design for 18,000 lb axle load.

e. Design for 500,000 total 18 kip repetitions (established from two GOM traffic counts).

f. The DMJM, April 1974, Soils Information Tests reported the percent passing the No. 200 sieve (.075 mm) as dry sieve analysis. In order to obtain accurate information for soils classification, we recommend that all samples

of soils be run in accordance with AASHTO T-11 (Material Finer than No. 200 Sieve in Aggregates) or AASHTO T-88 (Mechanical Analysis of Soils).

B. Subbase Structural Evaluation

1. DMJM, Technical and Economic Feasibility Report, January 1973. Page II-15, has subbase requirements of 6 inches in both Alternate I and Alternate II designs, requiring the subbase to have a CBR value of 25 (unsoaked). This stipulation (unsoaked) would have permitted clays as subbase material.

   Chapter III contains DMJM materials investigations. A number of sources are listed having ranges of CBR values between 4 and 27.

   Appendix Table E-XIV, contains numerous samples designated as base and subbase materials. The average test values (see Appendix E-1) are:

   a. CBR average value 12.

   b. Density averaged 117 lbs/cu. ft.

   c. Optimum moisture content averaged 12.9 percent.

   d. Liquid Limit averaged 38.

   e. Plasticity Index averaged 17.

   f. Percent passing No. 200 sieve (.075 mm) averaged 17.

DMJM, Chikwawa-Bangula Soils Information, April 1974, contained the following data on base and subbase (see Appendix E-2):

a. CBR average value 12.

b. Density averaged 121.8 lbs/cu. ft.

c. Optimum moisture content averaged 10.3 percent.

2. Government of Malawi, Ministry of Works and Supplies, M-8 Chikwawa-Bangula Report, July 1981, contains the following subbase data: (from drawings G.I. 274A & 274B)

a. In situ CBR average value 14.

b. In situ moisture content averaged 12.3 percent.

c. Optimum moisture content averaged 10.6 percent.

d. Percent of maximum density (AASHTO T-180) 96.7 percent.

e. Percent passing No. 200 sieve (.075 mm) averaged 30.

f. Liquid Limit averaged 44 (four non-plastic).

g. Plasticity Index averaged 25 (four non-plastic).

h. Materials classification of 11 pit samples of the subbase.

A-2-4(0)	A-2-7(1)
A-2-4(0)	A-7-6(5)
A-4-(0)	A-7-6(6)
A-2-4(0)	A-7-6(6)
A-2-6(0)	A-7-6(7)
A-2-4(0)	

3. FHWA Team Conclusions and Recommendations - Subbase Materials

Conclusions:

a. Evaluation of DMJM and GOM reports on subbase materials indicates there was a large percentage of clay present. The CBR values (12, 12, and 14) are low, and the Plasticity Index (17 and 25) are high. Classification, both Unified and AASHTO, support the fact that large amounts of clay are present in subbase materials.

DMJM Unified Classification had the following:

(1) GC clayey gravels;

(2) SC clayey sand; and

(3) CL clays with low plasticity.

GOM/AASHTO classification were:

(1) A-2-6(0) clayey sands and gravels;

(2) A-2-7(1) clayey sands and gravels; and

(3) A-7-6(5, 6, and 7) clays.

b. There were some sands and gravels that were classified SW (sand well-graded) and A-2-4(0) (sands and gravels). These materials would be desirable as selected materials for subbase and were used at various locations.

c. The percent passing the No. 200 sieve (.075 mm) on the majority of samples were too high to be classified as suitable subbase materials.

d. The majority of GOM's pit samples in cracked and failed areas had in situ moisture contents above the optimum moisture content.

e. The pavement failure was compounded by the lower than 95 percent compaction density.

f. The thickness of the subbase observed was less than 6".

g. As reported on page 2, GOM, Ministry of Works and Supplies, M-8 Chikwawa-Bangula Report, July 1981, "No gravel subbase was located in the 22 trial pits. The sand mix being constructed on the unprimed subgrade." The FHWA team agrees with their statement. Visually we could not locate any material that appeared to fall in the subbase classification in the failed areas. The lack of this structural section which was in the original DMJM design is a major contributing factor to the early failure of this road.

Recommendations:

a. Strict enforcement of specifications for subbase materials.

b. Write specifications that will insure quality materials and insure adequate quality control of construction.

c. Specify only soaked CBR values.

d. Additional suitable subbase sources need to be located for reconstruction. The FHWA team believes the GOM Materials Staff has the capabilities to explore and drill for new sources. The testing facilities in Lilongwe are adequately equipped and are staffed with competent technicians. We were also informed by GOM that the Materials Staff has the time to do the necessary exploration and testing. They also indicated that they plan to start exploration with or without the assistance of AID.

The GOM outlined their standard procedure for source development. Their plans are similar to our procedures for establis source boundaries and source depths.

e. A clean sand blanket is recommended in all areas containing clay subgrade materials. A sand blanket should prevent the infiltration of clays into the subbase.

C. Sand-Asphalt Pavement Structural Evaluation

1. DMJM, Technical and Economic Feasibility Report, January 1973. On page II-15, two alternate designs are shown. DMJM selected Alternate Pavement II which required a total thickness equivalent to 6 inches of asphaltic concrete. This would be composed of 1 inch sand-asphalt pavement, 3 inches of sand-asphalt base, and 6 inches of subbase.

According to numerous entries in the DMJM/Teer site meetings (Appendix A-8, 9, and 10), there were mix design problems during construction. Pavement cracking was observed in many areas during construction. DMJM requested assistance from Mobil's Asphalt Engineer. Mobil recommended that mix designs be made by DMJM and Mobil's laboratory. The results from the two additional mix designs were not available for review by the FHWA team.

DMJM, Design of Sand-Asphalt, was as follows:

Location of Source	Percent Asphalt Base	Percent Asphalt Surface
Designed Mwanza Source 1270+00	4.07%	5.55%
Used Mwanza Source 1270+00	4.38%	5.35%
Used Tangadzi Source	5.19%	6.08%
Specification	4 - 5%	5.5 - 6.5%

Marshall Mix design data from Froehling and Robertson, Inc., Chikwawa-Bangula, March 4-5, 1974, Record No. B-1108 (see Appendix E).

Percent Passing	14% SG-2/86% CS-1			14% SG-2/86% SG-1		
1/2"	100.0			99.6		
3/8"	99.5			97.8		
#4	98.5			92.7		
#8	95.2			85.4		
#30	50.3			34.0		
#50	15.4			12.6		
#100	6.6			6.8		
#200	3.8			4.0		
Bitumen %	4.0	5.0	6.0	4.0	5.0	6.0
Stability	133	191	228	175	210	215
Flow .01"	10	11	12	10	12	13
Unit Wt. PCF	122.7	124.5	125.6	125.7	126.0	129.3

For further analysis, refer to Appendix E-3.

2. Government of Malawi, Ministry of Works and Supplies, M-8 Chikwawa-Bangula Report, July 1981, data on sand-asphalt.

   a. Surface 5.50 m wide.

   b. 25 mm thick wearing course.

   c. 65 mm thick base course.
      100 mm thickness total.

   d. The sand-asphalt was placed directly on the subgrade.

   e. Asphalt extraction by reflux Sample No. 1 (no location):

      H-56 4.59 percent bitumen by weight of mix

      H-75 4.43 percent bitumen by weight of mix

      Average bitumen 4.43 percent by weight of mix

   f. Gradation of extracted aggregate Sample No. 1:

Percent Passing	
3/8" (9.5 mm)	- 100%
3/16" (4.75 mm)	- 93%
#7 (2.36 mm)	- 83%
#25 (.60 mm)	- 44%
#36 (.425 mm)	- 33%
#52 (.30 mm)	- 26%
#100 (.15 mm)	- 15%
#200 (.075 mm)	- 6%

3. FHWA Team Conclusions and Recommendations - Sand-Asphalt Pavement

   Conclusions:

   a. The concept of using natural occurring sources for sand-asphalt is not a new concept. It is an economical approach

to be able to use existing materials without crushing. Also, haul distances are usually reduced which is an additional savings. We are in agreement with the concept and believe it should be used when the materials are available.

b. In addition to the lack of structural adequacy of the subbase and subgrade soils, the sand-asphalt mix also contributed to the early failure.

The mix design information from DMJM had extremely low Marshall stabilities which, in the team's opinion, did not meet their structural design assumptions for equivalencies to asphaltic concrete.

c. There was apparent lack of quality control in the production of the mix which included:

(1) Gradation - excessive in amount of fines.

(2) Asphalt percent - too low.

(3) Density - possibly too low.

d. Mixes of sand-asphalt with low percentage of asphalt produce very brittle (high modulus) mixes. We would estimate this mix to have modulus of resiliency values (M_r) between 800,000 to 1,000,000.

Recommendations:

a. It is necessary to obtain higher stability values for sand-asphalt mixes for roads with heavy truck loads.

b. Resilient modulus values should be obtained that would range between 300,000 to 500,000.

c. All sand-asphalt pavements need to have an armor coat such as a chip seal. Sand-asphalt by their nature surface abrade very easily and need to be protected. Asphaltic concrete overlays can be used for the armor coat if additional structural strength is required.

d. When new concepts and ideas are attempted, it is adviseable to evaluate asphaltic mixes with fatigue testing such as "repeated load triaxial." Possibly some of the Universities in Africa could perform this type of testing. If not possible, AID could make arrangements with FHWA to have these tests performed in the United States.

e. The design assumptions that equate 1 inch of sand-asphalt surfacing, 3 inches of sand-asphalt base, and 6 inches of subbase to that of 6 inches of asphaltic concrete (DMJM report) appears to be underdesigned. The equivalency criteria used by DMJM were not available to the FHWA team. However, assuming the sand-asphalt base, surfacing mixes, and the subbase materials conformed to the speci-

fications, the FHWA team concludes the pavement structure was still underdesigned. Using the layer coefficient proposed by AASHTO's Interim Guide dated October 1961, the DMJM pavement design thickness equals about 4" of asphaltic concrete and not 6". Therefore, the pavement appears to be underdesigned by an equivalent of 2" of asphaltic concrete.

III. Short- and Long-Term Solutions

A. Short-term Solutions

1. Protect the existing pavement in fair, marginal, and poor condition. This totals 40.1 miles (64.4 km).

2. Improve the destroyed and partially destroyed sections of 10.8 miles (17.4 km) before the on-set of the wet season. There have been reports that some of the destroyed sections are not passable during the wet season.

Recommendations (see Appendix G for costs):

1. Remove the high shoulders by blading in order to improve the pavement drainage.

2. Patch breakups, depressions, and potholes. The GOM forces are currently patching in the Bangula area. It is necessary to triple this effort in order to be completed before the beginning of the wet season. (See Appendix H).

3. Waterproof and rejuvenate the surface of the pavement. This can be accomplished by fog sealing with liquid asphalt. The fog sealing will minimize crack migration and keep surface moisture out of the subgrade. (See Appendix J).

4. Overlay poor areas with 1 inch of asphaltic concrete. This was recommended in order to save the 3.6 miles (5.8 km) in the poor category. However, due to constraints of time and money, this overlay option did not appear to be a viable alternative.

5. Reshape and rework the 10.8 miles of destroyed and partially destroyed pavement areas and place an average of 3" of gravel or diced quarry rock onto the distressed areas to keep the road open to traffic.

In the FHWA team's opinion, the GOM forces have the manpower and equipment to blade the shoulders, to patch, to fog seal, and to reshape the destroyed pavement. The only major constraint is lack of money.

B. Long-Term Solutions

The long-term solution is recommended for implementation during the 1982 construction season. The 50.9 miles would be rehabilitated and reconstructed to the traffic demands for the next 10 years. The allowable load per axle will be 8.2 metric tonnes. (See Appendix K for costs).

Recommendations:

1. Rehabilitation:

   a. Pavement in FAIR condition - 26.5 miles (42.5 km): Bituminous surface treatment (see Appendix F for stations).

   b. Pavement in MARGINAL condition - 10.0 miles (16.1 km): Overlay with asphaltic concrete (see Appendix F for overlay thickness and stations). Overlay thickness requirements were calculated using the Asphalt Institute method from the AASHTO Interim Guide, 1972, Overlay Design Procedure 4.2.3. The Design Traffic Number (DTN) was approximately 137. The deflection data was from the GOM July 1981 report.

   c. Pavement in POOR condition - 3.6 miles (5.8 km): This section could be saved if patching and overlaying with asphaltic concrete were completed before the beginning of the wet season. However, due to the constraints of time and money, we assumed nothing could be accomplished this year. Therefore, we placed this section into the RECONSTRUCTION category.

2. Reconstruction:

   Pavement requiring RECONSTRUCTION - 10.8 miles (17.4 km) plus the POOR section of 3.6 miles equals 14.4 miles (23.2 km) total reconstruction. (See Appendix E for stations).

   Recommended Structural Design:

a. Surfacing - 3 inches of asphaltic concrete (D_1)
(See Appendix P for specifications)

b. Base - 4 inches of crushed aggregate (D_2)
(See Appendix R for specifications)

c. Subbase - 24 inches of select material (D_3)
(See Appendix S for specifications)

d. Sand Blanket - 6 inches

e. Subgrade soils have a soaked CBR value of 3.

The above recommended 37" pavement section will require excavation of 34" of the existing roadway. The proposed pavement section will then be 3" higher than the existing pavement grade and thus will provide a smooth transition with the proposed overlay of the adjacent sections.

Within the reconstruction sections are three sections totaling 1.9 miles which require grade raises between 1 and 3 feet in order to prevent water from overtopping during floods. Overtopping in these areas was reported and there was evidence of it. The proposed locations of the grade changes are listed in Appendix N.

Alternate Structural Design:

a. Surfacing - Double bituminous surface treatment
b. Base - 13 inches of crushed aggregate (D_2)
c. Subbase - 24 inches of select material (D_3)

d. Sand Blanket - 6 inches

e. Subgrade soils have a soaked CBR value of 3.

The alternate structural design with the double surface treatment is not an economical choice. It would require a greater thickness of crushed aggregate base (9 inches more) and, therefore, needs deeper excavation because of the additional required aggregate base. The subbase and sand blanket requirements remain the same in both sections. The double surface alternate treatment would cost an additional $825,000 (K700,000) over the recommended asphaltic concrete surfacing. (See Appendix L).

The above two structural design sections satisfies:

a. Requirements for structural thickness in relation to soil strength and traffic.

b. Thickness requirements over Black Cotton Clay. Approximately 1 metre of cover is needed to minimize the effect from shrink and swell which is typical for this tropical soil.

Determination of the structural design assuming the following conditions, using the AASHTO Interim Guide, 1972.

a. 18 kip repetitions of traffic = 500,000 total

b. Serviceability Index $P_t = 2.0$

c. Regional Factor R = 2.0

d. Subgrade soil CBR value soaked 4 days = 3

CBR 3 converted to Soil Support Value = 3.2

e. Subbase CBR value = 11 (4 day soak)

a_3 coefficient of strength = .08

f. Base CBR value = 50 (4 day soak)

a_2 coefficient of strength = .14

g. Surface - asphaltic concrete

a_1 coefficient of strength = .40 when using the following design for mix parameters:

(1) Marshall Mix Design ASTM D 1559

Stability 500 minimum

Flow 0.01 inch 8-18

Voids total mix 3-5%

Aggregate voids filled 75-85%

50 blow compaction on each end

(2) Immersion Compression AASHTO T-165

Voids total mix 6.0%

Compression strength 250 lbs/sq. in. minimum

Retained strength 70% minimum

Dust/asphalt ratio 1.2 maximum

h. AASHTO thickness calculations

(1) Support value of 3.2 calculate to a Weighted Structural Number of 3.68 (SN)

$$SN = a_1D_1 + a_2D_2 + a_3D_3$$

Where:

a_1, a_2, a_3 = layer coefficients representative surface, base, and subbase.

D_1, D_2, D_3 = actual thickness, in inches, of surface, base, and subbase.

Therefore:

The recommended pavement section is calculated:

$$\begin{aligned} 3.68 &= (.40 \times 3") + (.14 \times 4") + (.08 \times 24") \\ &= 1.20 + .56 + 1.92 \\ &= 3.68 \end{aligned}$$

The alternate pavement section is calculated:

$$\begin{aligned} 3.68 &= (.14 \times 13") + (.08 \times 24") \\ &= 1.82 + 1.92 \\ &= 3.74 > 3.68 \end{aligned}$$

Implementation of the long-term solutions:

a. The GOM has the technical capabilities to undertake the design and construction supervision of this project. According to GOM, they are assigning this project a No. 1 priority. Manpower constraints are no problem according to GOM Engineers.

b. Funding of the project is difficult for GOM. They have limited funds and cannot finance a project of this magnitude.

c. The FHWA team believes this project should be contracted by the competitive bidding process. This project is too large for the GOM maintenance forces to reconstruct or to have the work performed by "force account."

d. If AID participates in the funding of the reconstruction, we recommend a monitoring system be established in order for AID to be assured that the contract specifications are being followed.

e. AID should be involved in the approval of all plans and specifications which involve U.S. funding.

f. If A&E consultants are used, AID must also monitor the design, planning, and construction.

g. AID operations are extremely diversified; from buildings to sheds, roads to trails, dams, irrigation, etc. We would suggest they call upon expertise from various governmental agencies to assist them in designing and administering their projects.

h. For the reconstruction of Chikwawa-Bangula road we suggest:

(1) A U.S. Engineer be sent to Malawi to assist the GOM in the preparation of the contract.

(2) During construction, a U.S. Project Engineer and Senior Construction Technician should be assigned to work with and to train GOM construction personnel.

IV. Stage Construction

Due to funding difficulties, it may be more realistic to assume $3 - $4 million would be advisable each year for rehabilitation and reconstruction. (Dollar figures given below are based on September 1981 prices.)

A. Rehabilitation

To adequately protect the pavements rated in FAIR and MARGINAL condition, the recommended overlays should be performed during the 1982 construction season. This overlay is estimated to cost $5.4 million for the 36.5 miles. If funding is such that two construction seasons are needed to complete the overlay program, the pavement identified as needing 2 inches or more overlay should be constructed first (1982 construction season). The 2 inches or more sections will cost $2.7 million. The remaining sections identified as needing less than 2 inches overlay and single surface treatment should then be constructed in the 1983 construction season. The cost for these sections is estimated at $2.7 million.

In the event of further funding restrictions, the above overlay and surface treatment program could be reduced proportionally to the amount of funds available. However, there is a risk involved in using the stage construction approach.

1. More pavement will degrade into the RECONSTRUCTION category.

2. Increased maintenance will be necessary and the costs will be greater than anticipated for the areas identified as RECONSTRUCTION.

Overlay construction should be performed by contract.

B. Reconstruction

To implement stage construction in the RECONSTRUCTION sections, the alternate pavement structural section of double surface treatment, 9 inches of crushed aggregate base, 24 inches of selected subbase, and 6 inches of sand appears to be, in this case, the more practical and economical solution. The asphalt concrete (3") alternate was proposed assuming all reconstruction would be performed under one contract and in one construction season. Stage construction would require the mobilization of asphalt concrete equipment (plant and pavers) for a number of years, increasing the price per ton considerably, thus making the double surface treatment alternative more economical.

The reconstruction with the double surface treatment alternate is estimated to cost $1.2/mile. Assuming it would take five construction seasons to complete the reconstruction, $3.4 million is needed per year. Stage reconstruction could be performed by African contractors.

C. If no U.S. funding is available, approximately $100,000 to $200,000 will be needed for maintenance work to keep the road

open to traffic. The maintenance work would consist of importing and compacting gravel or shot rock into the distressed areas without pavement surfacing as required to keep the road open to traffic. Over the years, this continuing maintenance work would eventually provide a stable foundation for an asphaltic overlay. Overlay thickness would have to be determined by deflection analysis just prior to the overlay.

V. Traffic Analysis and Vehicle Loading

One of the major features in the structural design of pavements is traffic analysis. Next to soil strength, the traffic analysis calculations influence the success or failure of a pavement section. Both quantity of vehicles and weight of vehicles are needed in an accurate analysis. Allowing heavier than designed loads or underestimating the quantity of vehicles are common problems associated with pavement structural design. Most countries have established legal axle loading requirements. Pavement life is greatly affected (reduced) by allowing overloading.

For example:

Using the data from GOM on the Chikwawa-Bangula road, the data translated to about 65 daily 18 Kip repetitions. Increasing each axle load by 10 percent, the total 18 Kip daily equivalent is increased to about 200. The resultant effect from this increase would be:

A. a reduction of the life of the pavement between 20 and 30 percent; or

B. an additional 1 3/4" asphalt concrete overlay to retain the desired pavement life.

The legal load limit for Malawi is 8.2 tonnes per axle. For the M-8 road between Chikwawa and Bangula, the load limit was reduced to 6.1 tonnes per axle. The FHWA team did not see any signs along M-8 north of Chikwawa or east or west of Bangula restricting the load limits to 6.1 tonnes per axle. From observations only, it was impossible for the team to determine whether or not the 6.1 tonnes per axle load limit was violated. The GOM officials indicated to the team that loads in excess of 6.1 tonnes per axle were used.

A. The FHWA team recommends:

1. Traffic axle loads be controlled and legal load limits enforced.

2. Suggest that the GOM discuss with officials of the Sucoma Sugar Plantation the problems that occur from overloaded vehicles.

VI. Quality Control and Specifications Compliance

As mentioned previously, there are numerous factors which affect the longevity of a road. Even if all of the design assumptions are determined accurately and there is no enforcement of specifications during construction, then early pavement failures should be anticipated.

The GOM has very good specifications for road and bridge construction. We believe their capabilities are more than adequate to administer construction contracts.

VII. Training

The GOM engineers are well educated. Many have degrees from schools in the United Kingdom and the United States. While having a sound academic background is important, it is necessary to have actual design and construction experience. On-the-job design and construction experience will aid the engineer in making practical decisions.

The GOM engineers and technicians assigned to the Design and Materials Sections are well experienced.

A. The FHWA team recommends that the GOM Materials Engineer have the opportunity to spend 1 month in one of the Direct Federal or in one of the State highway departments material laboratories. There are many new concepts and techniques available which could have been used to eliminate the problems found on the Chikwawa-Bangula road. For example:

1. New equipment for determining resilient modulus.

2. Methods to identify marginal aggregates.

3. How to use marginal aggregates.

4. Use of dilute emulsions for dust abatement.

5. Addition of Portland cement to sand to improve sand-emulsified asphalt mixes.

6. Nuclear compaction testing.

B. The FHWA team recommends that one or more of the Maintenance Engineers work with the Maintenance Engineers from a State with conditions similar to Malawi, such as Texas. This would provide the Malawi Engineers with the state-of-the-art techniques in maintenance and road management. This would assist in making the limited funds go further in maintaining their roads.

C. The FHWA team recommends that a U.S. Design Engineer work with the Malawi design team for 1 month on the Chikwawa-Bangula reconstruction and rehabilitation design. This period can be used to exchange design and specification procedures. This would also provide GOM with some of the technologies employed in the United States.

D. The FHWA team recommends that one U.S. Project Engineer and Senior Construction Inspector be assigned to the Chikwawa-Bangula project. This would aid the GOM in developing their experience in contract administration, field supervision, and materials control. If this plan is accepted, a work program needs to be developed to cover all areas in construction contract administration.

VIII. Maintenance on the Chikwawa-Bangula Road

A. During the Rainy Season 1981-1982

In the more likely event that the short-term solution cannot or only partly be implemented, heavy maintenance work can be expected for the damaged and distressed sections of the road. Frequent inspections are required and workers, equipment, and materials (gravel) should be available on short notice. It is anticipated that potholes throughout the damaged and distressed sections will develop requiring immediate correction. If this is not done, the road may become impassable to traffic. More maintenance efforts will be required for the damaged sections proposed for reconstruction. For those sections, it is advisable to have 20 m^3 of gravel for patching stored at critical areas or every 500 m. Any water ponding will need immediate correction.

$50,000 should be set-aside for maintenance work during the rainy season.

B. After Completion of Reconstruction and Rehabilitation Work

The road should remain in good condition if routine maintenance is performed throughout the year with concentrated efforts prior to and immediately after the rainy season. Besides the routine work, particular attention needs to be directed toward keeping the pavement well drained.

The basic maintenance work consists of:

1. Occasional pavement patching.

2. Shoulder work (blading).

3. Slope work - repair of erosions.

4. Drainage:

   a. Cleaning of ditches, drainage pipes, and culverts.

   b. Repair of scours, particularly at inlet and outlet areas of drainage structures.

5. Mowing.

Assuming a $1,000 per mile maintenance cost, $50,000 per year should be budgeted for this 51 mile section of M-8.

C. General

We were impressed with the Southern District's maintenance operation. Equipment and manpower are available.

Theoretically, an implemented pavement management system can save money by minimizing the need for costly rehabilitation. In reality, the maintenance can be only as good as the availability of money. The GOM does not have adequate funds for maintenance, but does have the equipment, expertise, and manpower.

IX. Additional Data Requirements

If more had been made available to the FHWA team, a more accurate determination could have been made in the determination of the pavement failure. If a more precise evaluation is needed, the following information needs to be obtained.

A. Preliminary Engineering - Structural Design

1. Traffic analysis showing the axle loading anticipated and projected future traffic.

2. Pavement design with supporting data and calculations.

3. Laboratory CBR test data.

4. Mix design assumptions for the sand-asphalt.

5. Originally we requested the source locations for base and subbase materials. This was some of the data received after returning to the United States.

6. Quality reports on the base and subbase materials.

7. Quality reports on the sand-asphalt was requested originally. This data was also received by the team after returning to the United States.

8. Specifications, special provisions, and contract documents used on the Chikwawa-Bangula project.

B. Construction Engineering and Contract Administration

1. Project diaries.

2. Quality control tests on subgrade, subbase, and sand-asphalt.

   a. Compaction (densities).

   b. Gradation and classification.

   c. Asphalt extraction results.

   d. CBR of materials used by station-to-station.

C. Post Construction

1. As-constructed plans.

2. Documentation of design changes and the criteria used to make the changes.

3. Who reviewed the changes and who approved the design changes.

4. Change orders.

5. Interviews with various employees of DMJM, Nello L. Teer Co., GOM, and U.S. AID involved and responsible for planning, design, construction, and construction supervision/administration of the project.

In summary, having all of the above in addition to the information available to the FHWA team while in Malawi, would have aided in strengthening some of the statements in the report and answered questions which still remain unanswered.