PN-AAZ-944
ISN 50218

CONSULTANCY REPORT ON

CASTING AND HEAT TREATING WORKSHOPS FOR THE EDIBLE OILSEED PROJECT IN BURMA

contract # 482-0006-C-00-6060-00

Prepared by

Peter F. Wieser
Wieser & Associates
14738 East River Road, Columbia Station
OH 44028

Prepared for:

Agricultural Cooperative Development International
50 F Street, N.W.
Suite 900
Washington, D.C. 20001

February, 1988

F: QWE-2-85-45

Table of Contents

Executive Summary 1

Introduction 2
Scope of Work 2
Training Programs 3
Manufacture of Pressing Worms 3
Manufacture of Cage Bars 5
Carburizing 5
Hardening 6
Other Heat Treat Operations 7
Heat Treatment Facilities 7

Conclusions and Recommendations 9

Tables and Figures 11

Appendix A: Melting and Heat Treat Facilities 18
B: Suggested Literature 20

EXECUTIVE SUMMARY

The writer visited Burma to participate in the edible oil processing project to 1) evaluate Burmese manufacturing sources for repairing and producing replacement parts for oil processing machinery, 2) teach applicable methods in workshops at the cooperatives, and 3) make suggestions for future improvements.

The experience gained from this visit to Burma and the trials that were conducted by the writer with the aid of the cooperatives and ACDI personnel indicate that the workshops will be able to supply replacement parts for the two most important components, namely press worms and cage bars.

To enable the workshops accomplish these objectives four essential techniques were demonstrated:

Alloying of gray cast iron to realize greater hardness i.e. wear resistance of the cast worms.

Pack carburizing of steel to realize the necessary carbon content of steels used for cage bars with adequate hardness i.e. wear resistance after hardening.

Hardening of cast iron press worms and cage bars by heat treatment.

Design, construction and operation of heat treating furnaces needed for hardening operations.

Cast iron press worms will enable oil cooperatives achieve greater efficiency in their oil extraction when compared to the worn parts currently in use. The use of steel, rather, than cast iron, was delayed until suitable melting facilities become available to the workshops.

To operate effectively and provide satisfactory end products it will be most helpful if a number of programs be considered:

Continuing education and training for operating personnel in foundry and heat treating activities.

Supply of auxiliary equipment and services to monitor and control melting and heat treating operations: thermo-couples, chemical analysis, and hardness testers.

Provide for the availability of certain alloys that help achieve greater product quality: FeSi inoculants and Cr-Mo master alloy, or Cr, Mn and Mo alloys, FeSi inoculants.

Provide for the availability of printed information for self help and study by workshop personnel in the area of foundry and heat treatment.

The writer is pleased to have been associated with this project and would like to compliment the people at the cooperatives for their enthusiasm and considerable skills that they have brought to this project. Their hospitality during the visit has been greatly enjoyed.

INTRODUCTION

The writer was invited to participate in this project to provide assistance in developing Burmese sources for the repair and replacement of machinery parts for existing oilseed processing facilities. The writers task was limited to metallurgical considerations and concentrated primarily on pressing worms and cage bars (Figures 1 and 2).

Cage bars are assembled inside a press as indicated by the cross section of a press in Figure 3. The pressing worms rotate inside the cylindrical cavity of this press. The rotation of the worms compresses the seed and forces it forward while pressing it against the cage bars. Cage bars and pressing worms are subject to wear. For cage bars, wear is limited to the exposed narrow face of the bar. In the case of the pressing worms, wear is severe along the outside diameter of the flights and on the cylindrical worm body.

In addition to wear, cage bars are subject to bending along their length. The requirments for these components are therfore hardness to resist wear, and a limited amount of ductility to prevent brittle facture under the bending stresses imposed in service. Normally such properties are achieved by specifying low or medium carbon steel in conjunction with gas or liquid carburizing techniques followed by hardening.

In addition to wear, pressing worms are subject to shear and tensile stresses. Shear stresses develop where the flight joins the cylindrical worm body. Tensile stresses are significant inside the cylindrical worm body where the body is indexed to a shaft via a rectangular slot. The rotational movement of the shaft is transmitted to the worm via this slot and causes tensile stresses across the remaining cylinder wall. Note that the slot configuration represents a stress raiser which requires that special attention be given to the interplay of material strength and wall thickness. The requirements for this part are therefore hardness to resist wear and significant strength. This combinations can be realized with either hardfacing of a steel, or surface hardening a low alloy steel, or carburizing a low alloy steel that is subsequently hardened. In any case, steel is the preferred material because it can be repaired by building up worn areas with weld overlays, and by applying hardfacing in selected areas.

SCOPE OF WORK

To address the metallurgical concerns and to deal with the problems of developing Burmeses sources for replacement parts the work performed during the writers visit to Burma encompassed the following principal areas:

1 Planning and orientation in Rangoon, Jan. 11 - 17.
2 Visit oil cooperatives and metal working shops in Mandelay, Jan. 18 - 20.
3 Teach and develope metallurgical skills, improve metallurgical facilities. Training programs were held in Meiktila (Jan. 25-30), Naung Yoe (Feb. 1-2), and Pegu (Feb. 5).
4 Preliminary summary report and recommendations to Dr. Than Htaik in Rangoon, Feb. 5.

The following sections deal with the major issues involved in developing Burmese sources for replacement parts.

TRAINING PROGRAMS

At each of the three locations (Meiktila, Naung Yoe, and Pegu) the training courses emphasized the needs of the edible oil processing project:

1 Melting and alloying of gray cast iron, as well as white martensitic alloy iron (Ni-hard).
2 Heat treatment, hardening, of cast irons and steel.
3 Pack carburizing of steel.
4 Heat treat furnace design.

Other topics were introduced by personnel attending the workshops. Some examples are melting and casting of aluminum and copper base alloys, alloy selection for specific applications (automotive brake drums, sleeve bearings, aluminum pistons for diesel engines, etc.), and charge make-up for cast iron melting.

A written plan had been developed in advance for the longer workshop in Meiktala. Deviations from this and similiar plans were necessary depending on the local facilities, regional interests, and our progress with practical demonstrations in the areas of hardening, carburizing, and heat treatment.

MANUFACTURE OF PRESSING WORMS

Steel would be the preferred material of construction for pressing worms as indicated earlier in the introduction. Since melting facilities for steel are not available at the cooperative workshops attention was focused on cast iron as a substitute. Gray iron is produced routinely by the workshops. A brief description of the melting facilities currently available at the workshops is presented in Appendix A. The disadvantage of cast iron worms is that they cannot be repaired by welding. They are, however, expected to significantly boost the performance of oil presses when compared to the worn steel components that the writer observed at the oil cooperatives. There are several alternatives for producing pressing worms from cast iron with

wear resistance

1a Gray cast iron, hardened by heat treatment.
1b Low alloy gray iron, hardened by heat treatment.

2 chilled cast iron.

3 Ni-Hard, white, martensitic iron.

The first option of hardening cast iron pressing worms applies to unalloyed as well as low alloy grey cast iron. Alloying with 0.5 % to 1 % Cr, and 0.3 to 0.5 % Mo will increase the Brinell hardness after hardening from about 460 HBN (~48 HRc) to about 520 HBN (~ 55 HRc). To maintain machinability of the I.D. area hardening can be limited to the flight and the outside diameter of the worm body if rapid cooling from the inside diameter is prevented during the quenching operation. This can be accomplished by preventing the quenching medium from entering the bore, using sand and clay as a seal as indicated in Figure 4.

Chill casting is another technique of producing a hard outside surface that resists wear better than ordinary gray cast iron. For this purpose a permanent metal mold of, for instance, gray cast iron, can be used. A second method is to chill only the flights using a composite mold of sand with embedded chills. The thickness of the chills, and the temperature of the permanent mold have to be regulated to limit the chilling action to the outside diameter. In this way the metal along the inside diameter zone will solidify in the normal gray manner and thereby maintain machinability. Late additions of ferro-silicon as an inoculant are another important tool for controlling the degree of chill formation, particularly when chills and permanent molds are used.

The third alternative, the use of a Ni-hard composition, instead of gray cast iron, is of technical interest. The production of Ni-hard is too ambitious with the present facilities at the workshops, it should be considered when facilities for chemical analysis, metallography, and temperature control have been developed. There are several Ni-hard alloy compositions. Type A is of particular interest for this wear application; it contains 3.3 to 5 % Ni and 1.4 to 3.5 % Cr. The chromium level is selected according to the cross section of the part, to assure the formation of carbides instead of graphite. The amount of nickel is subject to similiar considerations and serves to insure conversion of the matrix to hard martensite, rather than the softer components of pearlite and ferrite. Ni-hard requires only a 4 h stress relief at 400 to 450 F after shake-out of the casting from the mold. The major disadvantage of this alloy is that the I.D. is practically non-machinable. Dimensional changes are ordinarily accomplished by grinding only.

Low alloy iron production was demonstrated at the Meiktila

workshop during this workshop, but the attempts to cast Ni-hard failed due to difficulties in controlling the alloy dissolution and recovery in the small melting units. The method of alloying that worked quite well was to stirr chromium into the stream of liquid metal while the iron was cast into a simple mold. The ingot produced in this manner was then remelted without difficulty as part of the charge in a subsequent heat. This method of alloying is not very practical and lacks consistency in alloy recovery. A master alloy that can be charged just like melting stock would remove these problems and should be considered in the future.

MANUFACTURE OF CAGE BARS

Cage bars can be produced from a range of carbon and low alloy steels. The core of these bars should have some ductility to accomodate the strain involved in straightening operations after quenching. To harden the surface only, one can either surface harden a high carbon steel, or one can carburize the bar surface and subsequently harden it by quenching the bar. In either case, the carbon content, rather than the alloy content are important because carbon controls the hardness of martensite formed upon quenching. The alloy content determines the depth to which martensite forms during quenching and has only minor effects on hardness. For the small cage bar cross section of 3/8 x 3/4 in. alloy content is not needed, carbon steel is sufficient.

Surface hardening requires more sophisticated tools than observed at the workshops. Pack carburizing was therefore chosen and demonstrated as a viable method for the Burmese workshops.

CARBURIZING

Carburizing to a depth of 0.05 inches below the surface may require up to 16 hours, depending on the temperature as indicated below:

Carburizing Temp. F	Carburizing Time h
1500	16
1600	8
1700	4
1800	2

Common carburizing teperatures are between 1600 and 1700F. The carburizing time for these temperatures is 8 and 4 hours respectively.

Liquid and gas carburizing methods are more controllable than pack carburizing because they utilize much more extensive and sophisticated controls and equipment. They offer the advantages of greater uniformity in carburization depth, and direct

quenching from the carburizing temperature. In this case these advantages, however are more than offset by the low capital cost and simplicity of pack carburizing.

Besides an ordinary heat treating furnace the only equipment needed for pack carburizing consists of containers in which the parts to be carburized are packed along with the carburizing medium. The containers can be made of sheet or plate steel. They should be air tight, and closed with a lid, having only small vent holes that prevent a pressure build-up when the container is heated. They should be large enough to allow 1/2 to 2 inches of carburizing material to surround the parts to be carburized. Shallow rather than square or round carburizing boxes are preferred because the heating time of the carburizing box is shorter with smaller thickness dimensions.

The carburizing mix used for demonstration in Burma consisted of 80 % charcoal, 20 % coke, and 20 % sodiumcarbonate (Na_2CO_3). The particle size for parts with small holes or teeth is usually held between 6 and 8 mesh. Compound losses vary with the specific process and may amount to 25 %.

Surface hardness values of about 60 HRc were achieved after hardening cage bars during the trials.

HARDENING

A hardening heat treatment for carbon and low alloy steels, or most cast irons consists of a heating cycle, referred to as austenitizing, followed by rapid cooling, quenching, to form a hard constituent, referred to as martensite. The hardened part is then tempered to reduce the brittleness of the martensite, and to lower the residual stresses introduced by the quenching operation. Because tempering reduces the hardness a compromise between the needs for toughness and hardness must be made. For severe wear applications tempering may be limited to 400 F, while temperatures up to 1350 F may be chosen when toughness is the primary goal.

For steel the austenitizing temperatures are commonly between 1550 and 1650 F. For cast irons they are about 100 F higher. For cast irons it is also important to hold the part at the austenitizing temperature longer. One hour per inch of thickness is advisable for cast iron to assure solution of sufficient carbon that later produces the hardness in martensite formed upon quenching.

Cast irons are commonly quenched in oil to prevent the formation of quench cracks. For carbon steels water is the preferred quenching medium unless the part geometry is particularly crack sensitive. Oil is preferred for crack sensitive parts of carbon and low alloy steels.

The temperature of the quenchant significantly affects the cooling rate. Higher quenchant temperatures reduce the cooling rate and therefore lower the hardness after quenching.

Salt, usually 10% in water, is often used to accelerate the cooling rate, and hence the hardness of the quenched part. This is due to the reduced formation of steam. The cooling rates of parts in salt solutions are also less sensitive to temperature variations of the quenchant.

Vigorous stirring of the quenchant is important in every case. Stirring enhances the uniformity of the quench, particularly in parts of complex geometry. Stirring also enhances the effective cooling rate in water because it breaks up and removes the insulating film of steam from the part/quenchant interface.

OTHER HEAT TREATING OPERATIONS

Heat treating processes for many other purposes exist besides hardening. The most common ones are normalizing and annealing for either maximum softness or machinability.

The principal differences between these and hardening are the cooling rate from the austenitizing temperature. The term anneal usually implies slow cooling of the work piece in the furnace. The term normalizing ordinarily indicates intermediate cooling rates that are obtained when the work piece is removed from the furnace and allowed to cool in still air.

A given part can be heat treated repeatedly. It can be softened after hardening, or vici versa. A given heat treatment can also be repeated if the desired result was not achieved in the first heat treatment attempt.

HEAT TREATMENT FACILITIES

Heat treatment facilities include the furnace, materials handling equipment for charging and discharging the work piece from the furnace, and provisions to control the cooling rate from the heat treating temperature.

Furnaces: It is common practice to have separate furnaces for austenitizing and for stress relieving or tempering. The reasons are the differences in refractory requirements of the furnace, burners, thermo-couple requirements, as well as the practicality of executing several heat trat operations in a given time.

In any case, the primary requirement for any furnace is the ability to achieve the desired temperature uniformly, and without direct impingement of burner flames.

The importance of temperature unformity is readily understood if

the effect of temperature is considered for the case of carburizing. A 100 degree F difference can mean that the depth of carburisation varies beyond acceptable limits as indicated by the previously discussed data. Similiarly, the hardness after tempering is strongly temperature dependent. A plus or minus 20 F variablity within the working zone of a furnace is considered quite good for many operations. Temperature uniformity is controlled by the number of burners, their spacing from each other, and the flow pattern of combustion gases within the furnace.

Direct impingement of flames on the work piece is to be avoided because it causes hot spots with the ensuing soft and hard spots after heat treatment, and because it causes excessive local scaling.

To achieve non-impingement the burner(s) must be installed to allow for a circular flow pattern of the combustion gases around the work piece(s). Figure 5 shows burners at opposite walls of a horizontal furnace, together with suitably placed furnace "furniture" upon which the work piece(s) are placed. A similiar effect is achieved in vertical furnaces with tangentially placed burners. The furnace "furniture" in this case can be simple brick; its primary purpose being only to provide a relatively non-reactive surface for the work to rest upon, and to provide space for debris, such as ash and scale (Figure 6).

Refractory brick, ceramic, cast iron, and high alloys steels are used for furnace "furniture". Data in Table I provide some information on the useful life of such metal parts, and their composition.

A furnace suitable for carburizing and austenitizing was built in Meiktila from local materials as indicated in Figure 7. It was fired with powdered solid fuel that was passed through a preheating bed of coke and charcoal. The preheater insured rapid ignition of the solid fuel and complete combustion before the combustion gases exited the furnace. Powdered coal, coke, charcoal and saw dust are suitable fuels. The latter was used most of the time because of its low cost. However the former have a higher combustion value and heat the furnace faster. The particle size of the solid fuel must be adjusted to insure that the particles are burned completely before the combustion gases can carry them from the furnace.

The furnace was operated without difficulty for hours between 1700 and 1800 F. Difficulties did exist, however, when the preheater was omitted.

<u>Materials Handling Equipment</u>: Suitable tongues or other equipment must be made available for charging and discharging furnaces. Furnaces are usually charged hot and the tongues ensure operator comfort and facilitate that the charge is placed properly. These tongues are even more important for the discharging operation

when the discharged parts are to be quenched. This operation must be performed rapidely, to prevent the work piece from cooling from the austenitizing temperature befor being plunged into the agitated quenching medium.

Quenching Facilities: Quenching media have been disussed earlier. When more than one piece is to be quenched the size of the quench tank and the degree of quenchant agitation are important. Larger tanks are needed when more than one piece is to be quenched to avoid excessive heating of the quench medium and loss of hardness in the quenched part. Agitation is helpful to minimize the effect of quenchant temperature and to ensure uniformity of the quench.

CONCLUSIONS AND RECOMMENDATIONS

The workshops visited by the writer have the capability of producing cast press worms from cast irons.

The workshops have also been shown, and learned successfully the manner in which a furnace for heat treating and carburizing can be built and operated with locally available materials. This, in conjunction with the heat treating (hardening) techniques, that were demonstrated on location, will enable them to process press worms and cage bars to the desired hardness for wear resistance in oil extraction equipment.

As in every situation where new techniques are introduced a period of learning, mistakes, corrections and improvements should be expected. Several courses of action are suggested in this regard to shorten the transition period and to accelerate the process of producing suitable parts:

1) Refresher and repeat courses especially with regard to heat treatment may be desirable at 1/2 to 1 year intervals. In the United States, and Europe courses of this type are made availble on a routine basis to operating personel from foundries and heat treating businesses. A similiar practice, geared to Burmese needs, would therefore be expected to pay long term dividends to Burma also.

2) To produce quality products consistently measuring techniques and devices need to be introduced, and made widely available. These include:

- 2A Brinell hardness testers for irons
- 2B Rockwell hardness testers for steels
- 2C Thermocouples for liquid metal and especially for heat treating furnaces.
- 2D Centralized chemical analysis and metallography services. For these to be effective they must be rapid, results must be provided within days rather than weeks.

3) Several books, listed in Appendix B, are recommended for widespread distribution among workshops. These aids will help personnel to initiate and carry out their own efforts to improve facilities and techniques because in every workshop the Burmese personel were eager to learn, and in most cases capable to read English texts.

4) There are some areas where lack of raw materials severly hampers progress and the quality of the end product. Ferro-silicon for use as inoculants in gray cast iron is one of these materials. Ferro-alloys, such as Fe-Mn, Fe-Cr, and molybdenum alloys are others. These issues are mentioned here even though they may be larger than those that can be handled by the current program.

5) For the purpose of the project purchase of a Cr-Mo master alloy would be of considerable benefit because it will make it possible to produce pressing worms to higher hardness and hence greater wear resistance. With the proper ratio of Chromium to Molybdenum in the master alloy the workshops will be in a much better position to consistently produce a cast iron with e.g. 0.5 Cr, and 0.3 Mo than if ferro-chromium and molybdenum sponge or alloy were obtained separately.

6) Ultimately a facility for melting steel should be considered for the cooperatives. Such a facility would be useful to this project, however, it would find widespread use in many other areas that the workshops are currently interested in. Castings as well as ingots could be produced in this manner. There are two approaches to be chosen from: 6A) A side blown converter that uses liquid iron as the principal charge from the currently available shaft furnaces or cupolas and 6B) an induction furnace that would utilize scap as the primary melting stock. The converter would have to handle between 3 and 6 tons to be technically feasible and could be used primarily for producing carbon and some low alloy steels. The induction furnace has neither size limitations nor limitations on the kind of cast iron, steel, or high alloy to be produced.

TABLE I: FURNACE MATERIALS AND FURNITURE

For estimating comparative operating costs of different designs of fuel-heated furnaces, it is safe to assume that firebrick linings will last for 5 years at temperatures below 1900 F and for one year above 2000 F. The life of metal parts thar are properly designed for stress and for usual furnace conditions will be approximately as follows:

Working Temperature F	Cast Iron years	Heat Resisting Alloys years
below 1400	5	...
1700	1	3
1800	1/2	2
1900	1/12	1.5
2000	not used	1/2

The nickel and chromium contents of certain heat-resisting alloys commonly used in furnace parts include:

Furnace Temp. below 1400F	
Nickel %	Chromium %
25	20
18	8
8	18
..	28
..	18

Furnace Temp. above 1400F	
Nickel %	Chromium %
63	18
60	12
38	18
35	15
30	10
12	28
11	25

其余▽3
Other

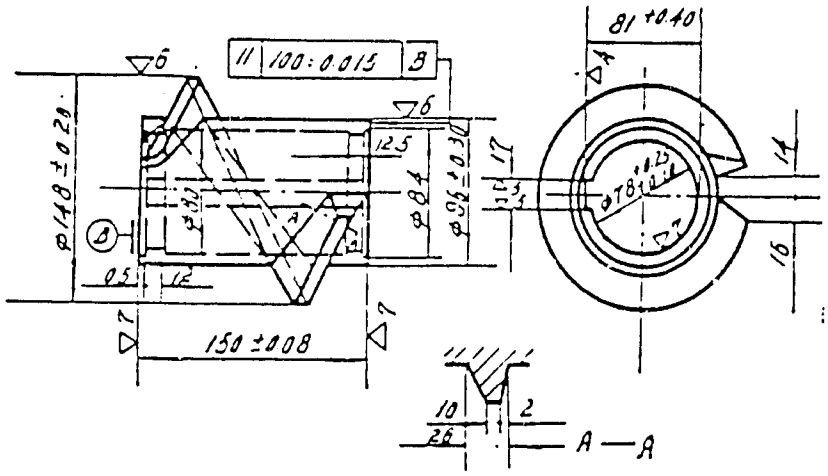

技术要求：

Technical Demands:

1. 表面渗炭深度为0.8～1.2毫米。

   Depth of surface carburization: 0.8～1.2mm.

2. 热处理硬度48～55HRc。

   Heat-treated hardness: 48～55HRc.

3. 两端面不平行度不得大于100:0.015毫米。

   Max. error in parallelism of two endfaces: 100:0.015mm.

4. 螺距：146

   Pitch: 146

件名 Part name	#3 挤螺 #3 Pressing worm	材料 Material	20	件数 Quantity	1	件号 Part No.	200—8—8

FIGURE 1

全部▽6
Total

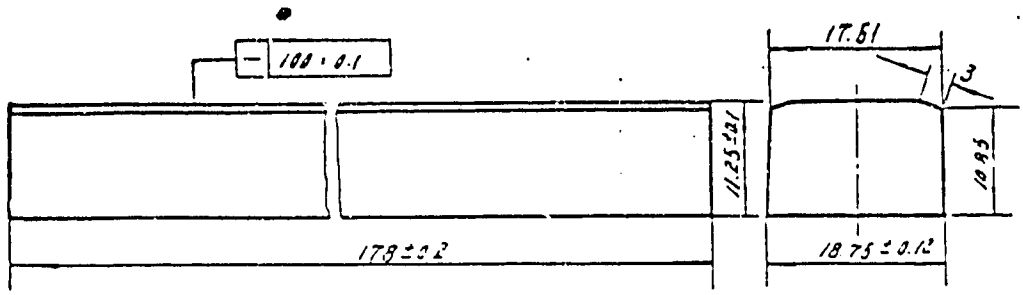

技术要求：

Technical Demands:

1. 表面必须平整光洁，不得有毛刺、起线、黑斑、裂缝等缺陷。
   The surface must be even, smooth and brilliancy, without faults such as burs, black spots, cracks and etc.
2. 表面渗炭深度为1～1.5毫米。
   Depth of surface carburization, 1～1.5mm.
3. 热处理硬度56～62HRc.
   Heat-treated hardness: 56～62HRc.
4. 不直度允差100:0.1。
   Max. error in straightness: 100:0.1.

件名 Part name	短棒条 Cage bar, short	材料 Material	20	件数 Quantity	44	件号 Part No.	200—16—32

FIGURE 2

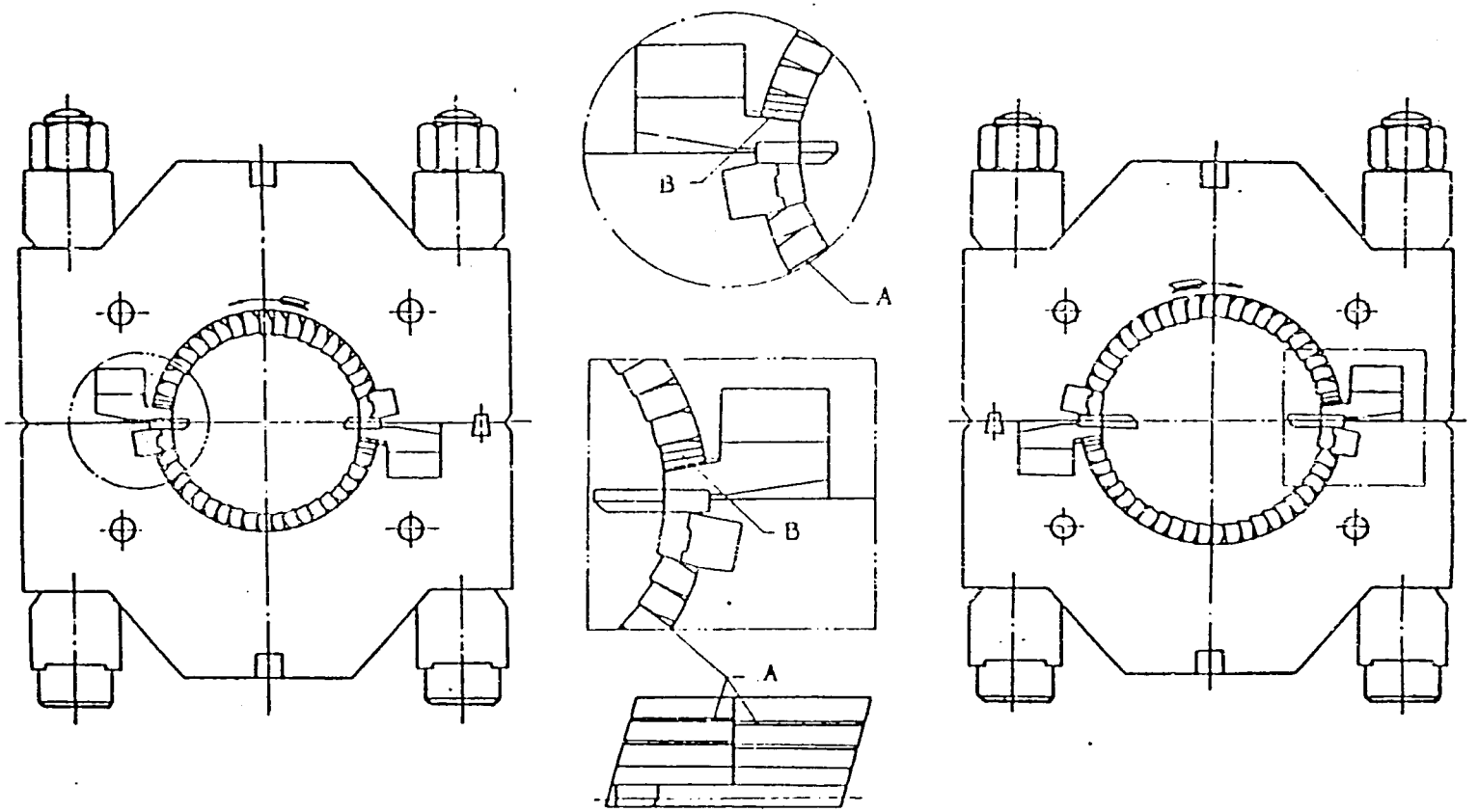

图 2（2） Fig · 2（2）

A. 垫片：垫在两掉条之间使油脂从掉条隙缝中挤出。

B. 垫板：在掉条经过垫片调节隙缝之后，其最后余隙用垫板充实。

A. Spacing strip: It is to be placed between cage bars so that the oil can force its way throuth the gaps between them.

B. Lining bar: After the gaps between cage bars have been adjusted by spacing strips, the gaps that are still present should be stopped up by the lining bars finally.

FIGURE 3

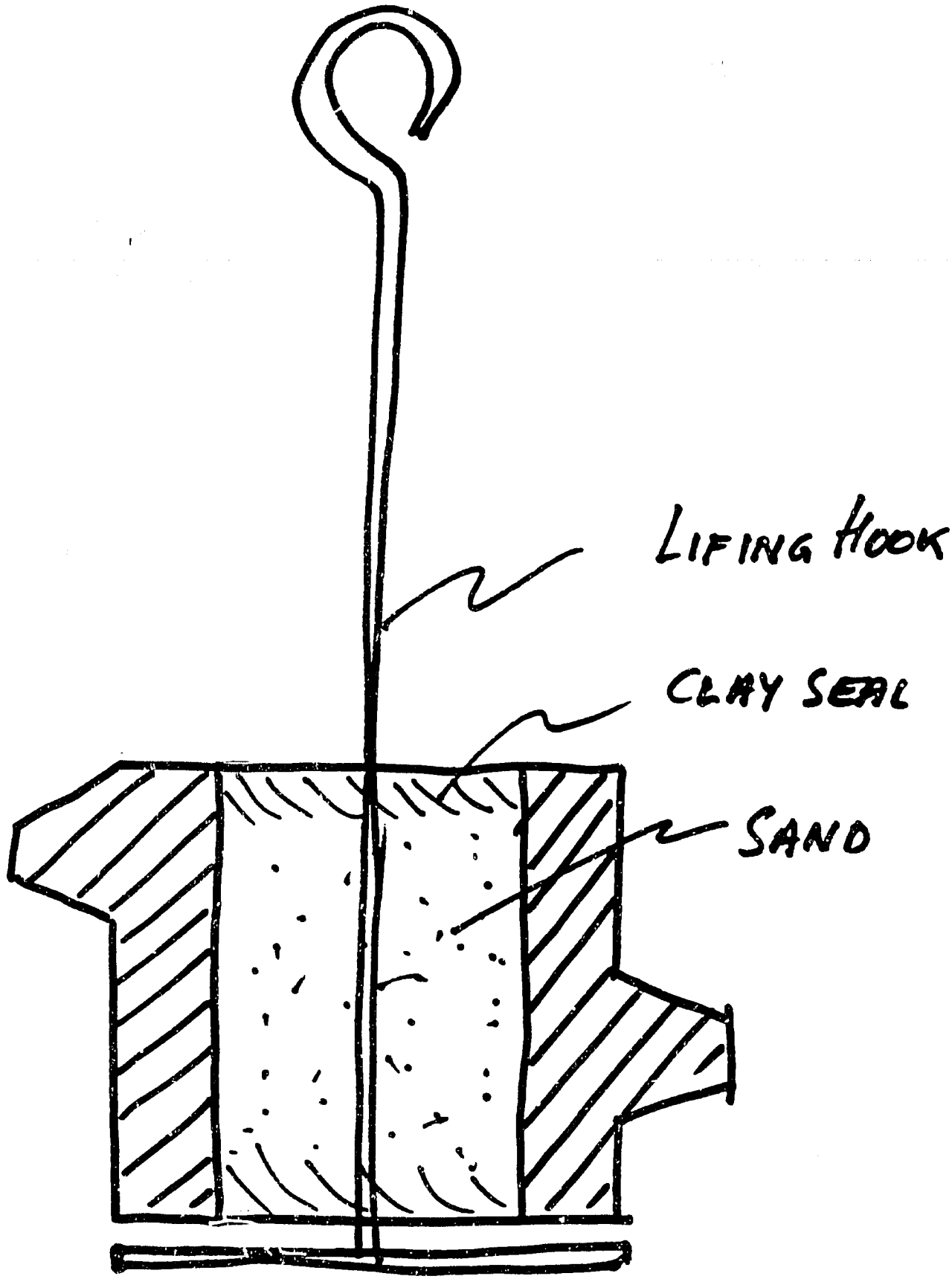

FIGURE 4 : CROSS SECTION OF PRESSING WORM SEALED TO LIMIT THE QUENCHING ACTION OF THE QUENCHANT TO THE FLIGHTS AND OUTSIDE DIAMETER.

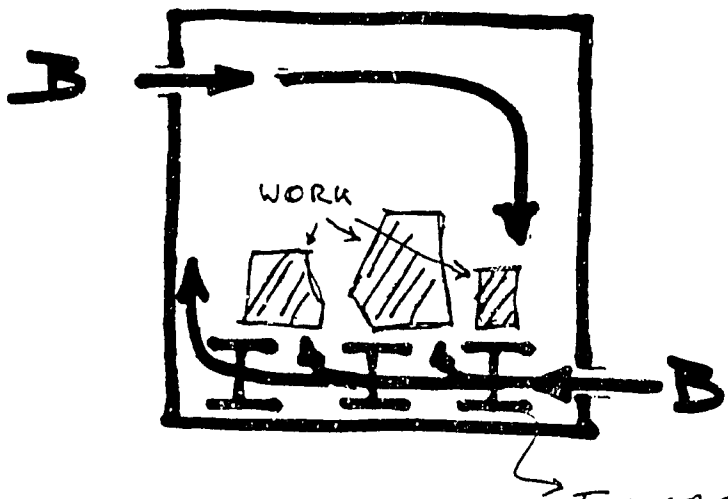

FIGURE 5

CROSS SECTION OF HORIZONTAL, SIDE FIRED FURNACE TO ACHIEVE CIRCULATING PATTERN OF FLAME AND COMBUSTION GASES

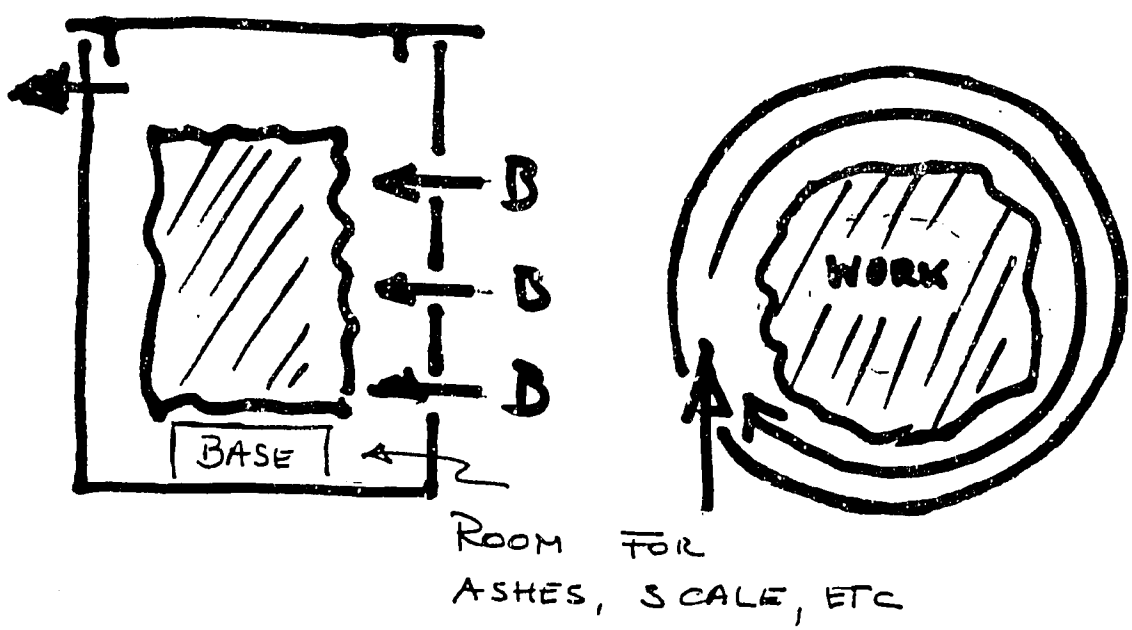

FIGURE 6

VERTICAL FURNACE WITH 3 TANGENTIALLY ORIENTED BURNERS TO ACHIEVE CIRCULATING PATTERN OF FLAME AND COMBUSTION GASES.

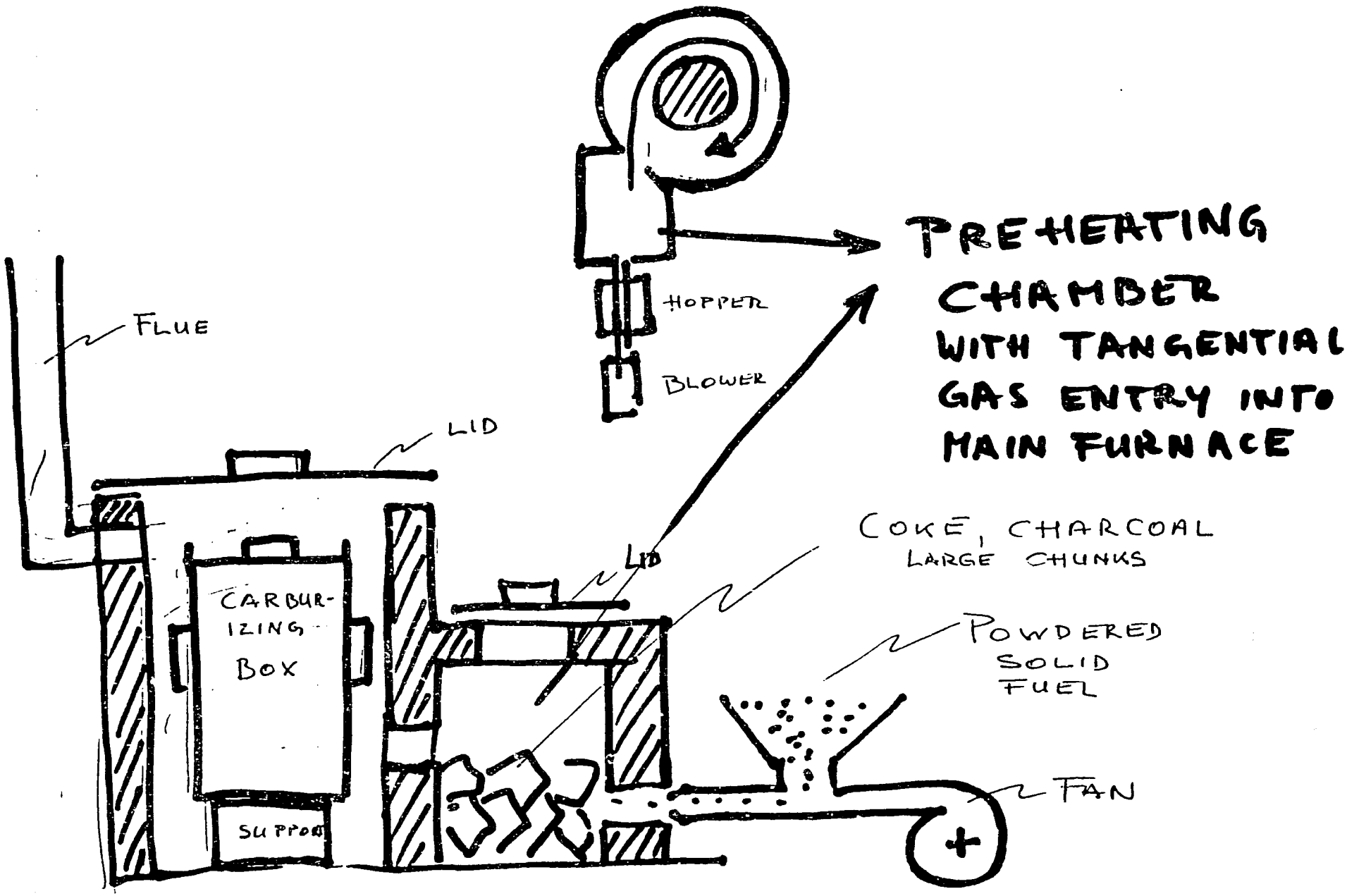

FIGURE 7: SCHEMATIC OF MEIKTILA HEAT TREAT FURNACE CONSTRUCTION

APPENDIX A: MELTING, MOLDING, AND HEAT TREATING FACILITIES

Melting: The workshops at Meiktila, Naung Yoe, and Pegu had one or several small shaft furnaces, similiar to cupolas, for melting cast iron. A typical heat size for melting cast iron was 100 lbs. These were "home made" type units, typically consisting of a shorter, 12 in tall, two foot diamter, cylindrical bottom vessel, with a taller, 4 foot, cylinder on top; both were lined with a blend of sand and clay.

Starting with a charcoal fire in the bottom vessel the unit was charged with either coke, sea coal, charcoal, or combinations thereof. The metallic charge was then placed on top. Either cast iron scrap, returns, pig iron, or combinations thereof were used for this purpose. Air was then blown via a 2 to 3 in. diameter hole in the side, near the bottom of the upper cylinder, and an electric motor driven blower. New fuel and metal were added as the initial fuel burned and the charge descended slowly down the shaft. When the melter felt that most of the metallic charge had been melted, the upper cylinder with fuel remaining in it was removed. Fuel floating on the molten iron was skimmed off, a cover of burned rice hulls was added to reduce heat losses and the metal was poured with the lower portion of the furnace serving as the pouring ladle.

Mini-cupolas, with dropping bottoms, and an entirely stationary structure, including a wind box and tuyeres were seen in Naung Yoe, and at a foundry society affiliated with the Rangoon Institute of Technology.

For these melting operations four techniques were demonstrated during the visit for immediate application:

1) The use of lime, in quantities of 1/5 the coke charge, to fluidize the slag, raise the metal temperature and achieve greater carbon pick-up.

2) The ability to substitute with greater flexibility pig irons from different sources as metal charge, and petroleum coke as fuel.

3) The use of chill samples as a tool for monitoring cast iron quality.

4) The use of ferro-silicon inoculants to improve and control the iron quality.

Molding: Sand and clay for molding varied with the local supply (from the back yard, or the closest river bank). These materials were blended manually. Most of the parts cast were molded with the original part serving as the pattern. Mounted patterns were not observed but appear to be known. Also observed was a sophisticated metal mold for casting aluminum pistons for diesel

engines, with several parts making up a collapsible metal core. The majority of molds and cores were dried with charcoal embers. A mold wash of graphite or coke powder suspended in water was frequently used. In art foundries religous and historical figurines were typically produced by the lost wax process.

Heat Treatment: Heat treatment facilities were virtually non-existent, other than charcoal fires for heating small parts prior to forging and later quenching. A misapplied quenching operation was observed where the operator allowed the work piece to cool to a bluish grey color before the quench. The operator explained that his procedure consistently gave high hardness.

Besides the electrically heated furnace for malleabilizing iron castings in the foundry society near Rangoon only two other furnaces were observed. Both furnaces were about 7 feet long, about one square foot in cross section and had been built to heat small diameter rods or ribbons for hot rolling. One of these furnaces was fired by two propane gase burners. The burners had been mounted on one side, near mid length, about two feet apart. The other furnace was saw dust fired. The flame entered the heating chamber at one end, heating the full length of the small diameter wire, and burning towards the opening at the other end that was used for charging the furnace and withdrawing heated work.

APPENDIX B: RECOMMENDED LITERATURE

1 ASM Metals Handbook, Vol. 4., Heat Treating, 9th. Edition, Current cost: $ 98.00, ASM Members: $ 78.00.

2 Heat Treaters Guide: Standard Practices and Procedures for Steel, ASM, ISBN: 087170-141-3. Current cost: $ 121.00, ASM Members: $ 96.80.

3 Iron Castings Handbook, Editors: C.F. Walton and T. Opar, 1981, available from Am. Cast Metals Association, $ 27.50.

4 Principles of Metal Casting, Heine, Loper, Rosenthal, AFS: $ 55.00.

5 Cupola Handbook, AFS, $ 120.00, AFS Members: $ 60.00.