PN-AAZ-866

Final Report to

Organization for Energy Planning
Cairo, Egypt
April 1988

Industrial Energy Audit Report
MISR Chemical Company
Alexandria, Egypt

Arthur D. Little Reference 59643

TABLE OF CONTENTS

	Page
Acknowledgement	vii
Report Summary	viii
SECTION 1 - Plant Description	1-1
1.1 Overview of Plant	1-1
1.2 Solvay Process	1-3
1.3 Caustic Soda	1-5
1.4 Sodium Bicarbonate	1-6
1.5 Steam Generation	1-6
1.6 Instrumentation	1-6
SECTION 2 - Audit Approach and Philosophy	2-1
2.1 Introduction	2-1
2.2 Audit Approach	2-1
2.3 Priorities at MISR	2-2
SECTION 3 - Plant Materials/Energy Profile	3-1
SECTION 4 - Main Engineering and Economic Data	4-1
4.1 Energy Prices and Cost Estimates	4-1
4.2 Steam Distribution, and Uses	4-1
4.3 Uses of Lime in the Process	4-7
4.4 Lime Kilns	4-9
4.5 Steam Generation	4-13
SECTION 5 - Energy Management Improvements	5-1
5.1 Recommendation 5.1 - Management and Organization	5-1
5.2 Recommendation 5.2 - Rehabilitate Process Instrumentation	5-2
5.3 Recommendation 5.3 - Energy Monitoring Instrumentation	5-2
SECTION 6 - Energy Conservation Opportunities	6-1
6.1 Housekeeping and Low Cost/No Cost Recommendations	6-1
6.1.1 Recommendation 6.1 - DCB Steam Usage	6-1
6.1.2 Recommendation 6.2 - Adjust Distiller End Point	6-2
6.1.3 Recommendation 6.3 - RHSB Control	6-2
6.1.4 Recommendation 6.4 - Recondition Condensate Hotwell	6-4
6.2 Capital Equipment Recommendations	6-3
6.2.1 Recommendation 6.5 - Calciner Flash Steam/Condensate Recovery	6-4
6.2.2 Recommendation 6.6 - Air Infiltration and Excess Air Control	6-7
6.2.3 Recommendation 6.7 - Lime Kiln Study	6-8

APPENDICES:

Appendix A	Survey Contacts
Appendix B	Oil Removal From Condensate
Appendix C	Production and Materials/Energy Use
Appendix D	Lime Kilns: Heat and Material Balances
Appendix E	Steam Plant Efficiency Estimates
Appendix F	Bill of Materials/Caital Cost Breakdown
Appendix G	Heat and Material Balance Calculations
Appendix H	Power Factor Measurements
Appendix I	Boiler Flow Measurements
Appendix J	Relationship Between Payback and IRR

LIST OF TABLES

Table No.		Page
S-2	Summary of Audit Results	S-3
1-1	Solvay Plant Production History	1-2
1-2	Solvay Plant Raw Material Consumption	1-2
3-1	Summary of Production/Consumption Statistics	3-2
3-2	Summary of Energy Consumption Statistics	3-3
4-1	Lime Kiln Heat and Material Balance Summary (see Table D-1) Effect of Radiation and Convection Loss	4-12
4-2	Lime Kiln Heat and Material Balance Summary (see Table D-2) Effect of Calcium Carbonate Conversion (CaO in Lime)	4-12
6-1	Waste Distillation Energy Savings (Recommendations 6.2 and 6.3)	6-3
A-1	Directory of Survey Contacts	A-1
C-1	Solvay Process Plant: Production/Consumption Statistics	C-2
C-2	Overall Energy Consumption	C-3
D-0	Factors Used in Heat and Material Balances	D-1
D-1	Lime Kiln Heat Balance Sensitivity Analysis Effect of Radiation and Convection Loss	D-2
D-2	Lime Kiln Heat Balance Sensitivity Analysis (at 25% Heat Loss) Effect of Calcium Carbonate Conversion (CaO in Lime)	D-3
D-3	Lime Kiln Heat Balance Sensitivity Analysis (at 25% Heat Loss) Effect of Moisture Content in Limestone	D-4
D-4	Lime Kiln Heat Balance Sensitivity Analysis (at 25% Heat Loss) Effect of Temperature of Lime Extract	D-5
D-5	Lime Kiln Heat Balance Sensitivity Analysis (at 25% Heat Loss) Effect of Temperature of Kiln Gas	D-6
E-1	Steam Boilers: Boiler Efficiency Sensitivity Analysis - Air Infiltration	E-3

LIST OF TABLES (Continued)

Table No.		Page
F-1	Bill of Materials Plant: MISR Chemicals	F-1
F-2	Summary of Capital Cost Estimates Plant: MISR	F-5

LIST OF FIGURES

Figure No.		Page
S-1	Specific Energy Consumption MISR Chemical Company	S-2
1-1	General Overview of Process Chemistry MISR Chemical Company	1-4
1-2	Solvay Plant - Caustic Evaporation MISR Chemical Company	1-7
3-1	Specific Energy Consumption MISR Chemical Company	3-4
3-2	Historic Production/Specific Energy Consumption MISR Chemical Company	3-5
4-1	Block Flow Diagram - Steam Distribution MISR Chemical Company	4-2
4-2	DCB Column Operation MISR Chemical Company	4-5
4-3	Waste Distillation Schematic and Lime (CaO) Balance	4-8
4-4	Lime Kiln Overview MISR Chemical Company	4-10
4-5	Boiler #4 Operating Data - MISR Chemical Company	4-15
5-1	Energy Monitoring Recommendations MISR Chemical Company	5-4
6-1	Calciner Flash Steam/Condensate Recovery MISR Chemical Company	6-6
E-1	MISR Chemical Steam Diagram	E-2

Acknowledgement

This project could not have been completed without the active support of the Egyptian Organization for Energy Planning, who provided guidance throughout the project and insightful review of the draft report.

We are indebted to MISR Chemicals management and employees for their excellent cooperation and assistance during the course of this investigation. They were extremely cooperative in providing the wide range of information and data requested. Several are to be especially commended for their patience in explaining certain points repeatedly and in great depth, when requested. The friendly and helpful spirit on the part of all is much appreciated.

We also wish to express our appreciation to the U.S. Agency for International Development for providing guidance and support throughout the program. This project was funded under USAID Contract Number PDC-5730-I-00-7024-00.

REPORT SUMMARY

MISR CHEMICAL COMPANY
ALEXANDRIA, EGYPT

INTRODUCTION

As part of a broader energy audit program, the Egyptian Organization for Energy Planning retained Arthur D. Little, Inc., Cambridge, Massachusetts, United States of America, to conduct an energy audit of the MISR Chemical Company facility located in Alexandria, Egypt. The field audit was conducted in January, 1988, and analysis of the information obtained continued in OEP's Cairo offices.

The audit consisted of a review of the process and plant's performance by interviewing various managers, by reviewing drawings, design information, and selected operating records. Based on this review, major sections of the soda ash plant were inspected, and a variety of tests and analyses were performed using both plant and portable instrumentation.

PLANT DESCRIPTION

MISR Chemical's 12-year old Alexandria facility comprises two separate plants: an Electrolysis plant, whose major products are caustic soda and chlorine; and a Solvay process plant which produces soda ash, sodium bicarbonate, and caustic soda. The Solvay plant is separate from the Electrolysis plant, not only in its location, but also in its process as well as in its services and utilities. The combined facility is large with a typical annual consumption of 100 million kWh of electricity, 60,000 tons of heavy furnace oil (Mazout), and 22,000 tons coke. This is equivalent to 95,700 tons oil equivalent (TOE) of total energy. Only small quantities of sular are used. The annual energy bill at the plant is about L.E. 7.6 million; at international energy price levels, the annual value of the plant's energy consumption would be about $13.3 million. The production capacity of the facility is:

Electrolysis Plant

- Caustic soda (100%)	27,000 ton/yr
- Chlorine	12,000 ton/yr (as liquid)
- Hydrogen	40,000 m3/yr

Solvay Plant

- Soda ash	35,000 ton/yr
- Caustic Soda (100%)	42,000 ton/yr
- Sodium Bicarbonate	2,000 ton/yr

The mix of products has differed year to year from the design basis. The plant operates continuously three shifts/day, seven days/week, year-round, except for maintenance shutdowns. Typical operation is 333 days/yr or 8000 hours/yr. Additional details about the plant can be found in Section 1 of the main report.

ESTABLISHING AUDIT PRIORITIES AT MISR

At MISR Chemical, the initial survey revealed that:

- The plant is a physically large plant and is a major consumer of fossil fuels and electricity (about 4 x 10^6 GJoule/year).
- Solvay consumes about 80% of the total plant energy consumption.
- About 70% of Solvay energy is in the form of mazout and 20% as coke.
- The Solvay plant specific energy consumption (about 38-41 GJoules/ton) approaches twice the design and industry norms (about 23 GJoules/ton) for the manufacture of soda ash and its derivatives (see Section 3). Therefore, significant amounts of energy can be saved at the plant.
- The plant's energy housekeeping was not unusually bad for a facility of this size and complexity.
- Little instrumentation in the 12-year old plant was still functioning.

These observations lead to certain key conclusions with regard to the energy audit priorities at MISR:

1. The Solvay plant is the major consumer of energy at the facility.
2. Although there are opportunities to conserve steam both in the process as well as in the boiler house, the greatest potential (and hence the higher priority) lies in the process.
3. After process energy, the second priority is efficient coke use, primarily in the production and efficient use of lime.

Accordingly, our primary focus in this audit has been on the places where steam can be more efficiently used in the process; how lime production, which is now the plant 'bottleneck', might be increased; and how lime can be more efficiently used.

FINDINGS

Process Instrumentation. The plant in general suffers from a lack of instruments. The original installation was well-instrumented, but over the years all but a few of the most critical items have been abandoned. Instruments here refers to pressure, temperature, flow, and analytical devices on the equipment; to signal transmitters and controllers; and to control valves and actuators. The present situation is attributed to (1) original poor selections by the plant's designer, (2) lack of repair capability during the early years' operation, and (3) a present lack of foreign currency to buy replacements or parts.

Energy Consumption. The Solvay plant uses mazout to fire 2- of 4-50-ton/hr, 36-bar, watertube boilers; coke for the lime kilns; and electricity for various mixers, motors, etc. Mazout accounts for 70% of the Solvay plant's annual energy consumption and coke represents about 20%.

Examination of the plant's production/consumption statistics reveals that there is great opportunity for major improvements in energy consumption. Figure S-1 shows the plant's design (standard) and actual specific energy consumption over the last few years. The plant's standard for energy consumption is 22.8 GJoules/ton crude soda ash equivalent, which compares favorably with current international standards of about 18.4 GJoule/ton (includes both thermal and electric energy). The plant's actual consumption of energy has been between 38 and 41 GJoule/ton in recent years. Thus, there is substantial room for improvement at the plant.

The basis for these numbers is discussed in detail in Section 3 of the main report.

RECOMMENDATIONS

The recommendations resulting from this study are summarized in Table S-2 and discussed below.

Management - Recommendation 5.1. Undertaking the detail design, procurement, and installation tasks described in Recommendations 5.3, 6.1, 6.3, and 6.5 are all well within the organization's capabilities as now organized. The other programmatic, recommendations probably are not. To seize the opportunities evident from this survey, we recommend the plant establish a process control organization. Its management and staff should include some of the best technical skills available within the plant staff. The process control group would be given the following responsibilities: establish operating standards for the important variables that determine plant performance; routinely (daily) analyze plant performance against standard; and analyze and develop concepts for improving operations.

Energy Monitoring Instrumentation - Recommendation 5.3.* It is important that energy monitoring instrumentation at the plant be rehabilitated and some additional instrumentation be installed. It is also important that the plant have the necessary skills to repair and maintain the instrumentation. As a minimum, the plant should meter mazout consumption, boiler steam production, and steam flow in the four main distribution headers. Cost is estimated at U.S. $25,000.

Housekeeping and Low Cost/No Cost Recommendations. As defined in this study, housekeeping includes both traditional housekeeping type Energy Conservation Opportunities (ECO's), e.g., steam leaks, steam traps, etc., as well as all retrofit options which require no (or minimal) foreign currency. Housekeeping options are evaluated under both local energy prices, as well as international price levels. Traditional energy housekeeping at the plant is in generally reasonable condition, considering the size, complexity, and age of the facility. The major improvements will come from process modifications. Specific recommendations include:

*Recommendation number corresponds to Table S-2 and the main body of the report.

Table S-2

Audit Summary Table
MISR Chemical Company

RECOMMENDATION	ANNUAL FUEL SAVINGS (2) (UNITS/YR)	ANNUAL ENERGY SAVINGS (kj/yr)	ANNUAL ENERGY SAVINGS (2) (TOE/yr)	ANNUAL VALUE OF SAVINGS ($/yr)	ANNUAL OPERATING COST ($/yr)	International Prices: CAPITAL COST ($)	PAYBACK (years)	LIFE (years)	IRR (%)	Local Prices: ANNUAL VALUE OF SAVINGS (L.E./yr)	CAPITAL COST (3) (L.E.)	PAYBACK (years)
MONITORING												
5.3 Boiler Instrumentation	N/A	N/A	N/A	N/A	N/A	$25,000	N/A	5	N/A			
SUBTOTAL	N/A	N/A	N/A	N/A	N/A	$25,000	N/A	5	N/A			
HOUSEKEEPING												
6.1 DCB Steam Usage	1,862 ton mazout	5.85E+10	1,801	$208,158	neg	$2,500	0.0	5	>1000%	52,124	3,520	0.1
6.2 Adjust Distiller Control Point	572 ton coke 307 ton mazout	1.66E+10 (coke) 9.66E+09 (oil)	681	$84,572	neg	neg	<1month	5	>1000%	119,025	neg	<1month
6.3 Control RHSB Stripping efficiency	1,028 ton coke 552 ton mazout	2.98E+10 (coke) 1.73E+10 (oil)	1222	$151,821	neg	$2,500	0.0	5	>1000%	213,672	3,520	<1month
6.4 Recondition Condensate Hotwell (1)	76 ton mazout	2.39E+09	74	$8,504	neg	$18,000	2.1	15	47%	2,130	29,700	13.9
SUBTOTAL	N/A	1.34E+11	4,609	$453,055	neg	$23,000	0.1	N/A	1970%	386,951	36,740	0.1
CAPITAL IMPROVEMENTS												
6.5 Flash steam Phase 1	936 ton mazout	2.94E+10	905	$104,613	neg	$75,000	0.7	10	139%			
6.5 Condensate Recovery Phase 2	1,655 ton mazout	5.20E+10	1,601	$185,029	$8,900	$100,000	0.6	10	176%			
6.6 Reduce Boiler Air Infiltration (1)	767 ton mazout	2.41E+10	742	$85,718	neg	$24,000	0.3	15	357%			
SUBTOTAL	N/A	1.05E+11	3,248	$375,360	$8,900	$199,000	0.5	N/A	184%			
TOTAL DIRECT ECO'S	N/A	2.40E+11	7,858	$828,415	$8,900	$247,000	0.3	N/A	332%			
RECOMMENDED PROCESS STUDIES												
5.2 Process Improvement Group	N/A	N/A		N/A	N/A	$1-2 million	N/A	N/A	N/A			
6.7 Evaluate Lime Kilns Operating Parameters	N/A	N/A		N/A	N/A	$150,000-$300,000	N/A	N/A	N/A			

Note: (1) at 20% equivalent annual usage (67 equivalent days).
(2) Energy savings for steam must be adjusted for boiler efficiency to get equivalent mazout and TOE.
(3) Assumes that local labor supplied by plant at no incremental cost.

Assumptions:

Currency conversion	2.20 LE/$
Boiler Efficiency	75.0%
Energy Conversion	4.33E+07 kj/TOE

Figure S-1: Specific Energy Consumption

MISR Chemical Company

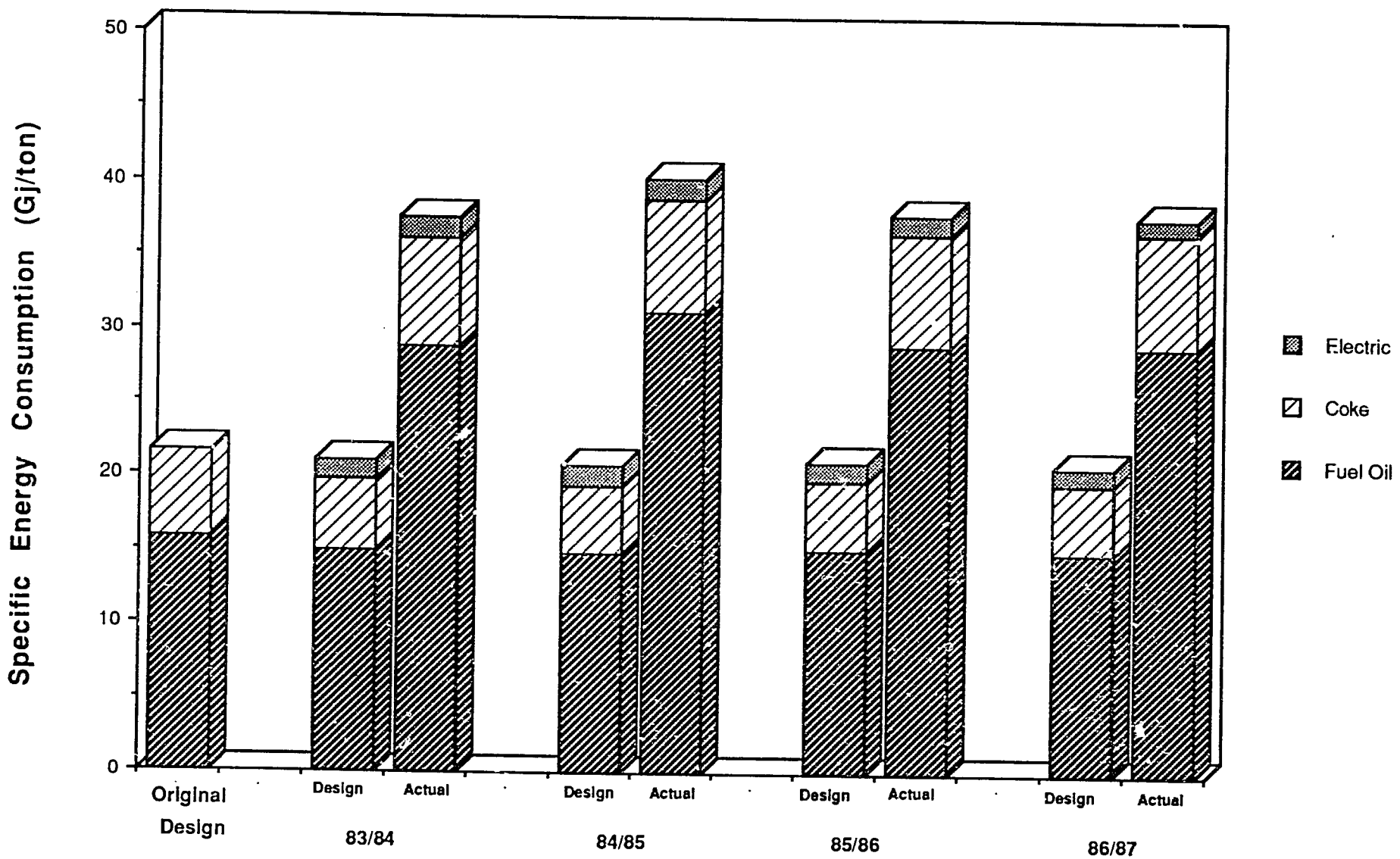

Note: (1) Design specific energy consumption varies, depending upon product mix
(2) No design value for electric power consumption
(3) Design electric taken at actual electric
(4) Specific energy consumption is per ton of crude soda ash equivalent

- Recommendation 6.1 - DCB Column

Utilization of 0.6 kg/cm^2 secondary steam from caustic evaporation can be improved in the DCB columns. The 0.6 kg/cm^2 steam is vented when backpressure at the base of the DCB columns gets too high. This occurs when the columns are run with too high of a liquid level in them, which increases the static head in the base of the column (see Section 4.2). Recommendation includes rehabilitation of a steam flow metering station. Annual energy (steam) savings are 5.85×10^{10} KJ/yr (1801 TOE). Annual savings are $208,000/yr; cost is estimated at U.S. $2,500; payback is immediate; internal rate of return is greater than 1000%. Development of a new operating procedure and the monitoring of progress will be necessary.

- Recommendation 6.2 - Distiller Control

The distiller end point has a major effect on lime utilization efficiency of the plant. This in turn affects both coke consumption as well as steam consumption. The current excess lime (distiller waste) control value is probably excessively conservative. A stepwise reduction to a level of about half the current level is advised. This will require development of a new operating procedure and monitoring of progress. Annual energy (steam) savings are 0.96×10^{10} KJ/yr plus coke savings of 1.66×10^{10} KJ/yr (681 TOE). Annual savings are $84,600/yr; there is negligible cost; payback is immediate; internal rate of return is greater than 1000%.

- Recommendation 6.3 - RHSB Efficiency

The efficiency with which the RHSB column strips ammonia has a direct impact on the efficiency of the waste distillation and thereby plant lime utilization (see Section 4.3). Increasing ammonia stripping in RHSB will increase lime utilization efficiency by reducing calcium oxide losses in distiller waste. Currently, there is no operating instrumentation on this column. Implementation requires development of a new control analysis, operating methods, and the monitoring of progress. It will also require the rehabilitation of a steam flow metering station. Annual energy (steam) savings are 1.73×10^{10} KJ/yr plus coke savings of 2.98×10^{10} KJ/yr (1222 TOE). Annual savings are $152,000/yr; cost is estimated at U.S $2,500; payback is immediate; internal rate of return is greater than 1000%.

- Recommendation 6.4 - Condensate Hotwell

The boilerhouse uses 5 bar steam for the steam air heater, fuel oil heater, and deaerator. Although the boilerhouse was originally built with a condensate hotwell to collect and recycle this condensate, it is no longer used. We suggest MISR consider reconditioning/rehabilitating the power-house condensate hotwell. This includes installation of new hotwell and pump. The cost is estimated at $18,000. Attractiveness depends upon capacity utilization of the old boilers once #5 boiler is on-line. If 20% equivalent annual utilization of the old boilers occurred, annual energy (steam) savings would be 2.4×10^9 KJ/yr (74 TOE), with a value at international prices of $8500/yr, giving a 2.1 year payback and 47% internal rate of return.

Capital Equipment Recommendations. These include the hard currency options. Capital equipment recommendations are evaluated only under international energy price levels.

- Recommendation 6.5 - Flash Steam/Condensate Recovery (Two Phases)

Steam condensate from the rotary tube calciner is currently being sewered. The heat value in the steam condensate should be recovered. We propose flashing the condensate in a flash tank to recover 5 bar steam (Phase 1) and returning the remaining condensate after cleanup, if necessary, to the boiler (Phase 2).

Phase 1. Install a condensate flash tank/oil decanter on the 30 bar condensate from the calciners. Cost is estimated at U.S. $75,000; annual energy (steam) savings are 2.9 x 10^{10} KJ/yr (905 TOE); annual savings are $105,000/yr; payback is 0.7 years; internal rate of return is 139%. Remaining work includes detail design and specifications of equipment, definitive cost estimate, procurement and installation, operation and testing system.

Phase 2. This phase may not be required, depending on the quality requirements for boiler feedwater. Final assessment must await completion and testing of Phase 1. Cost is estimated at U.S. $100,000; annual energy (steam) savings are 5.2 x 10^{10} KJ/yr (1601 TOE); annual savings are $176,000/yr; payback is 0.6 years; internal rate of return is 176%. The scope of remaining work, if required, would be as in Phase 1.

- Recommendation 6.6 - Boiler Excess Air

Current boiler efficiency is estimated to be about 75% (HHV basis) vs. a more typical 85%. The main problem appears to be a very high level of air infiltration into the boiler. Proper adjustment should raise boiler efficiency to about 80%. This recommendation requires the rehabilitation of the ID fan dampers, FD fan dampers, installation of furnace draft instrumentation, O_2 instrumentation, and repair of furnace shell and inspection ports. The cost is estimated at $12,000 per boiler. Attractiveness depends upon capacity utilization of the old boilers once #5 boiler is on-line. If 20% equivalent annual utilization of the old boilers occurs, annual energy (steam) savings would be 2.4 x 10^{10} KJ/yr (742 TOE). The annual savings at international prices would be $86,000, giving a 0.3 year payback and 357% internal rate of return.

Recommended Process Studies. The following studies are strongly recommended. Although they themselves will not result in direct energy savings, their results, if implemented, could have a major impact on plant energy consumption.

- Recommendation 5.2 - Process Control Instrumentation

Precise control of operations and evaluation of performance are difficult, if not impossible, without measurements. In order to properly manage and control operations and to have any hope of bringing plant material and energy consumption back in line with original design, the major process instrumentation control loops at the plant need to be rehabilitated,

repaired, or replaced. There are about 100 major control loops at the plant. In terms of conceptualizing cost, one should be thinking in terms of up to $1 million ($3,000-$5,000 per loop, just for equipment for a simple control loop). Restoring instrumentation to adequate levels will require: (1) identifying the important instruments, (2) developing a list of recommended items, (3) identifying suppliers and obtaining quotations, (4) obtaining management approval and funding, and 5) executing the program. We understand that the plant is already evaluating rehabilitation of about 45 key control loops. We believe it is very important that all major loops be rehabilitated.

- Recommendation 6.7 - Lime Kiln Study

To increase calcium oxide production quantity and increase its concentration in lime milk will require an extensive plant testing/development program. The goals are important, perhaps more so than those of the other recommendations combined. However, the cost for equipment installations, if any, cannot be defined at this time. The study would require about one year; estimated cost is $150,000-$300,000 depending upon the extent of foreign technical input.

Each of the recommendations is discussed in detail in Section 4 and 6 of the main report. Engineering data of the required equipment and a breakdown of capital costs are shown in the Appendices.

The annual energy savings if all options are implemented are $.24 \times 10^6$ GJ/year (7858 TOE). This represents approximately a 9% reduction in specific energy consumption for the Solvay plant. The annual savings at international price levels if all options are implemented are $825,000/yr.

Section 1
Plant Description

1.1 Overview of Plant

MISR Chemical Company, Alexandria (ARE), has about 4000 employees, including 200 engineers and chemists. The factory occupies a site of some 100 acres plus salt ponds.

The factory comprises two separate plants: an electrolysis plant which makes caustic soda and chlorine; and a Solvay process plant which manufactures soda ash, sodium bicarbonate, and caustic soda.

The principal raw materials, fuels, services, and supplies consumed at the factory are the following:

Sodium chloride	El Naser Saline Co.	(adjoins factory)
Coke	Nasser Coke Co.	(Cairo)
Limestone	Private Company	(Resource lies from km 21 to km 65 west of factory)
Power	Gen. Electrical Auth.	(32Kv)
Water	City of Alexandria	(for steam generation and cooling)
Furnace oil	Petro Gas	(Mazout: a high sulfur residual oil)
Ammonia	Abo Qir Fertilizer Co.	(Used, but not normally consumed in soda ash production)

ELECTROLYSIS PLANT. The factory has two mercury cell caustic/chlorine units:

- A graphite anode unit, which started operation in 1961, and
- A DSA (dimensionally stable anode - Swiss technology) unit, which started operation in 1982.

The production capacity of the electrolysis plant for the major products is:

Caustic soda (100%)	-	27,000 ton/yr
Chlorine	-	12,000 ton/yr (as liquid; the balance as HCl and bleach powder)
Hydrogen	-	40,000 m^3/yr

The electrolysis process produces caustic soda at 50% strength, which is the concentration at which it is sold; therefore, energy for evaporation is unneeded (unlike caustic soda produced in the Solvay plant). The plant has two 2-ton/hr and one 6-ton/hr steam boilers (10 bar, saturated) for general plant service. The principal energy source is purchased electric power. The power factor is 0.88 in the old (graphite) factory and about 0.82 in the new (DSA) factory. The electrolysis plant consumes about 65,000,000 kWh/yr of electricity and about 5,000 ton/yr of mazout.

SOLVAY PROCESS PLANT. This plant is a synthetic soda ash, caustic soda and sodium bicarbonate plant employing the Solvay process. The technology is Rumanian. Plant erection was completed and operations began in 1975.

The design basis and production history in recent years is listed below in Table 1-1 (the plant observes a 1 July/30 June fiscal year):

Table 1-1
Solvay Plant Production History

Net Production (Tons)	Design	Year 83/84	Year 84/85	Year 85/86	Year 86/87
Soda Ash	35,000	48,471	49,115	46,000	48,700
Caustic Soda (100%)	42,000	21,558	16,450	21,081	21,050
Sodium Bicarbonate	2,000	4,478	2,568	3,793	5,578
Equivalent Soda Ash	99,400	83,942	75,587	80,276	84,179

The mix of products has differed year to year from the design basis. However, each product uses crude soda ash as a raw material, and production of crude soda ash is the limiting factor in plant output. Thus we show the intermediate - Equivalent Soda Ash production; design capacity for crude soda ash is about 100,000 tons/yr.

The Solvay process plant is separate from the Electrolysis Plant, not only in its location but also in its process as well as in its services and utilities. The materials, fuels and utilities it uses are summarized in Table 1-2:

Table 1-2
Solvay Plant Raw Material Consumption

Commodity	Unit	Price Egyptian Pounds Per Unit	Annual Quantity (Approx.)	Annual Cost (Approx.)
Limestone	Ton	6.07	260,000	1,580,000
Salt	Ton	11.90	200,000	2,380,000
Coke	Ton	194.00	22,000	4,270,000
Ammonia	Ton	415.00	1,200	500,000
Mazout (Heavy Fuel Oil)	Ton	28.00	53,000	1,480,000
Electric power kwh	(x1000)	17.10	33,000	560,000

*Current exchange rate: Egyptian Pound 2.2 = US $1.00.

The power factor in the Solvay plant, which has a 32 kV feed and substation which is separate from the electrolysis plant, has recently been 0.87-0.90 (capacitor trimmed). This seems reasonable given the p.f. spot tests made as part of the audit (see Appendix H).

At present, the factory is entertaining suppliers' proposals and is seeking State authority for capital for a 120,000-ton/yr soda ash plant extension. Investment cost (expressed in U.S. dollars) will be more than $100 million of which about $65 million is in foreign currency.

The custom at the factory is to refer to its various sections or departments by the term "Object". This convention is adopted in this report. The major "Objects" discussed in this report are as follows:

Object 1	Lime kilns (step 1), lime slaking (step 2), and causticization (step 7).
Object 2	CO_2 compression, brine ammoniation (step 3), carbonation (step 4), and waste distillation (step 5).
Object 4	Crude bicarbonate filtration and wet and dry calcining (step 6).
Object 6	Brine purification.
Objects 11/12	Caustic soda production.
Object 35	Sodium bicarbonate production (step 8).
Object 15	Power station.

The step numbers in parentheses refer to the process chemistry steps discussed below.

1.2 Solvay Process

The Solvay process was first commercialized in 1865 (in Belgium) and has continued to be employed worldwide to the present time. Thus, the technology is mature and the more modern version installed at MISR Chemicals reflects more than a century of process development to improve efficiency of materials and energy use. The process involves relatively complicated process chemistry. The Solvay process uses salt, limestone, and coke as its raw materials and ammonia as a cyclic agent. Ammonia, carbon dioxide, and water in the right proportions react to form ammonium bicarbonate, which reacts with sodium chloride (salt) to form sodium bicarbonate, which is relatively insoluable in the solution used and can be filtered out and roasted to form soda ash. The ammonium chloride produced is converted back to ammonia by reaction with lime, producing calcium chloride byproduct. The lime is produced from limestone and coke by calcination in a lime kiln, which produces byproduct CO, which is used in the ammonium bicarbonate reaction. An overview of the plant's process chemistry is given in Figure 1-1 and is discussed below.

Figure 1-1: General Overview of Process Chemistry MISR Chemical Company

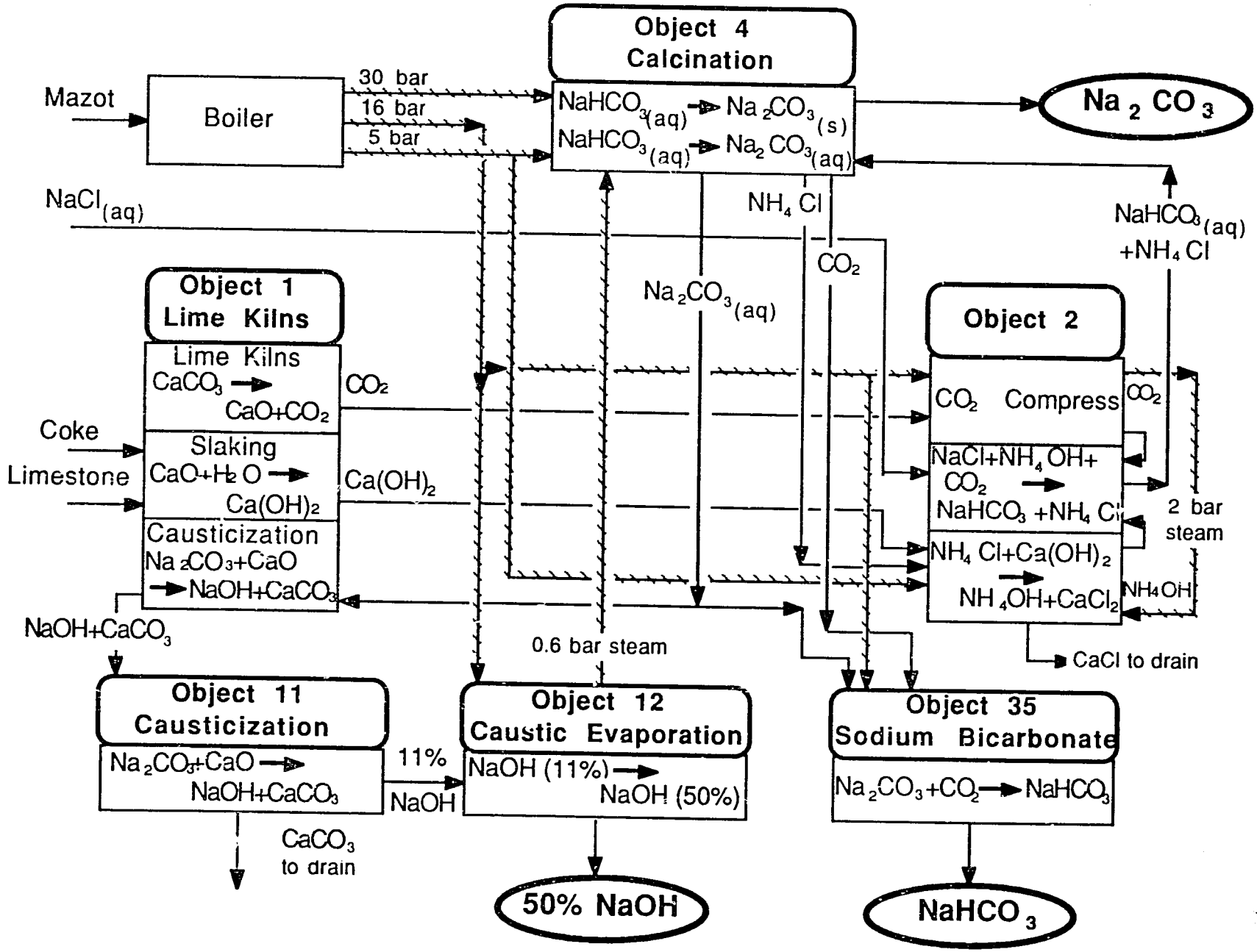

Notes:

- Steam System
- Products

The basic chemistry of the process can be described by the following six steps:

Step 1. Limestone Calcining: $CaCO_3 \rightarrow CaO + CO_2$
(lime) (gas)

Step 2. Lime Slaking: $CaO + H_2O \rightarrow Ca(OH)_2$
(lime milk)

Step 3. Ammoniation: $2\ NaCl + 2\ H_2O + 2\ NH_3 \rightarrow 2\ NaOH + 2\ NH_4Cl$
(solution) (gas) (solution)

Step 4. Carbonation: $2\ NaOH + 2\ NH_4Cl + 2\ CO_2 \rightarrow 2\ NaHCO_3 + 2\ NH_4Cl$
(solution) (gas) (solid) (solution)

Step 5. Ammonia Recovery: $2\ NH_4Cl + Ca(OH)_2 \rightarrow CaCl_2 + 2\ H_2O + 2\ NH_3$
(Waste Distillation) (solution) (solution) (gas)

Step 6. Bicarbonate Calcining: $2\ NaHCO_3 \rightarrow CO_2 + Na_2CO_3 + H_2O$
(solid) (gas) (product)

The overall reaction can be written thusly:

$CaCO_3 + 2NaCl \rightarrow Na_2CO_3 + CaCl_2$
(limestone) (salt) (Soda ash) (Calcium Chloride)

Ammonia acts only as a carrier for the alkalinity among the various process steps; there is no net consumption of ammonia. Purchase quantities represent replacement of handling losses in the factory.

At MISR Chemicals, the calcium chloride byproduct (step 5) is disposed of by pumping it to the ocean (distiller waste).

The process uses large amounts of energy in the form of steam and coke. The principal uses of steam are carbon dioxide compressor drives (step 4), in freeing ammonia gas from distiller waste (step 5), and in calcining bicarbonate (step 6).

Coke (carbon) is used to supply the large quantity of heat to calcine limestone (step 1). Coke is added to limestone which is charged to the top of a shaft kiln. Air is brought to the bottom of the kiln where it moves upward through the kiln and burns the coke (intermixed with the limestone) to supply the heat of reaction (calcination). The exhaust gases are cooled by preheating the limestone/coke charge moving downward. The exhaust gas (kiln gas) is rich in carbon dioxide: it is used in step 4. The factory experienced problems manufacturing lime (step 1) since its earlier days. This problem has been attributed to limestone quality. Insufficiency affects production of soda ash (step 5) and caustic soda (step 7).

1.3 Caustic Soda

In the Solvay plant, caustic soda is made chemically from soda ash (versus electrolytically from brine in the Electrolysis Plant) in the classical causticization reaction of lime with soda ash:

Step 7. Lime Causticization: $CaO + H_2O + Na_2CO_3 \rightarrow 2\ NaOH + CaCO_3$
(solution) (solution) (solution) (solid)

Causticization makes a weak caustic soda solution (10-11% strength) which is concentrated to 50% in a three-effect evaporation system (see Figure 1-2). This operation is another major steam consumer.

1.4 Sodium Bicarbonate

Refined bicarbonate of soda is made from soda ash solution by carbonation:

Step 8. Sodium Bicarbonate: $CO_2 + H_2O + Na_2CO_3 \rightarrow 2\ NaHCO_3$
(gas) (solution) (solid)

The bicarbonate is separated by filtration, is dried and packaged. This is a smaller steam consumer.

1.5 Steam Generation

Steam for the process is produced from four identical boilers burning heavy furnace oil (Mazout). Boilers are Rumanian design and construction. A fifth, larger boiler (Deutsche Babcock) is being erected at present.

Operational	Capacity
Boiler #1: since 1975	50 ton/hr at 36 bar, 450°C
Boiler #2: since 1975	50 ton/hr at 36 bar, 450°C
Boiler #3: since 1975	50 ton/hr at 36 bar, 450°C
Boiler #4: since 1985	50 ton/hr at 36 bar, 450°C
Boiler #5: under construction	100 ton/hr at 36 bar, 450°C

Steam is distributed to the plant in nominal 30 bar, 16 bar, and 5 bar supply systems (see Figure 1-1 and Section 4.2 for additional discussion of steam distribution).

The total steam requirement for the process is under 100 tons. Despite seemingly ample steam capacity, there have been continual supply problems. Boiler failures seem to be an almost daily occurrence (mostly due to tube leaks). At present, boiler 1 is dismantled and being completely rebuilt. When boiler 5 is in operation, boilers 2 and 3 will be abandoned.

Two 7.2 MW steam turbine driven generators were installed and tested in 1985. They are sufficient for the factory's entire power requirement (Solvay plant plus Electrolytic Caustic plant). Their operation is said to be awaiting completion of boiler 5.

1.6 Instrumentation

The plant in general suffers from a lack of instruments. The original installation was well-instrumented, but over the years all but a few of the most critical items have been abandoned. Instruments here refers to pressure, temperature, flow, and analytical devices on the equipment; to signal transmitters and controllers; and to control valves and actuators. The present situation is attributed to (1) original poor selections by the

Figure 1-2: Solvay Plant - Caustic Evaporation MISR Chemical Company

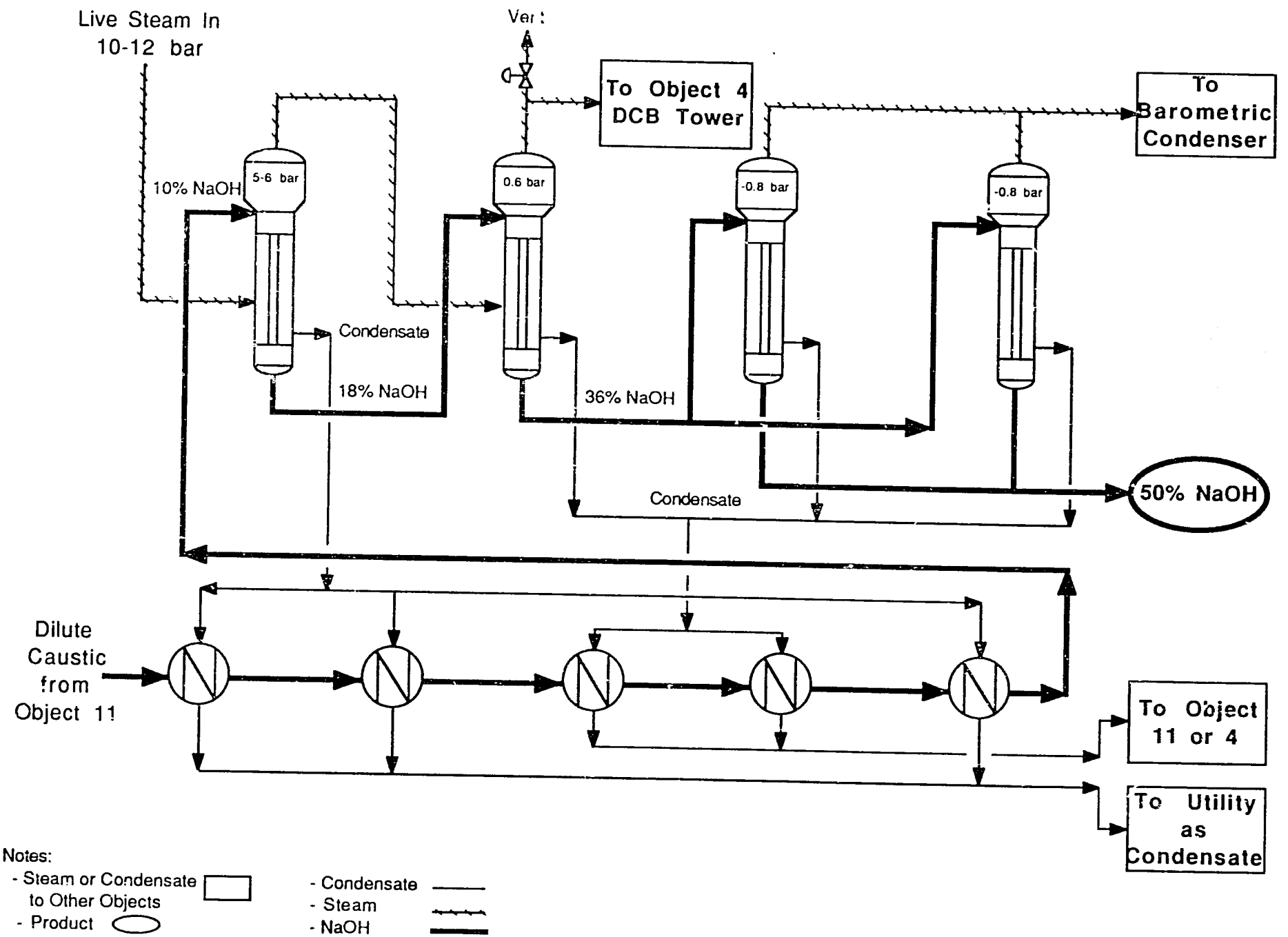

plant's designer, (2) lack of repair capability during the early years' operation, and (3) a present lack of foreign currency to buy replacements or parts.

Section 2
Audit Approach and Philosophy

2.1 Introduction

The field survey was conducted at the MISR Chemicals Company factory in Alexandria, ARE, in January 1988. Analysis of the information gathered in the field and preparation of this report continued in the office of OEP (Cairo). The survey consisted of a review of the process and plant's performance by interviewing various managers, by reviewing drawings, design information, and selected operating records. Major sections of the soda ash plant were inspected, and a variety of tests and analyses performed using plant and portable instrumentation. A field survey of power plant operations was performed, and selected measurements were made.

A report from an earlier survey was made available by the factory management and was reviewed in the course of this survey:

Energy Conservation in Chemical Industries
MISR Chemicals Industries Co.
July 1985

prepared for

The Foreign Relations Coordination Unit
of the Supreme Council Universities
Under Grant M/S842089
(Universities Linkage Projects
Grant No. 263-0118 UAR-USA 1980)

Appendix A contains a directory of all persons contacted in the course of this investigation.

2.2 Audit Approach

The energy audit began with a plant inspection and preliminary identification of energy conservation opportunities. During this initial evaluation, a wide variety of opportunities were identified and a qualitative screening analysis was performed to identify ECO's which had significant potential for energy savings (relative to other ECO's at the plant) and which warranted further investigation. Through this prioritization process, we focused on those ECO's which were of greatest importance to the plant.

For each of the priority ECO's, sufficient data was gathered to allow engineering design of the ECO and economic evaluation. The specific data gathered varied depending on the nature of the ECO. Data included plant logs and historical records, readings from plant instrumentation, analysis of samples using plant instrumentation, and readings from portable instrumentation brought with the auditors. During the data analysis, all data collected was generally cross-checked, and, where necessary, engineering judgment was applied. The level of engineering detail varied by ECO. Less detail was required for simple inexpensive ECO's; more detail was required for complex or more expensive ECO's. In all cases,

engineering judgment was used to direct the nature and extent of data evaluation.

2.3 Priorities at MISR

At MISR Chemical, the initial survey revealed that:

- Solvay consumes about 80% of the total energy consumption of the plant.
- About 70% of Solvay energy is in the form of mazout and 20% as coke.
- The Solvay plant energy consumption approaches twice the design and industry norms for the manufacture of soda ash and its derivatives (see Section 3).
- The plant's energy housekeeping was not unusually bad for a facility of this size and complexity.
- The plant is a physically large plant and is a major consumer of fossil fuels (about 4×10^9 KJoule/year).
- The plant is a continuous process operating 3 shifts/day, 7 days/week, year-round.
- Little instrumentation in the 12-year old plant was still functioning.

These observations lead to certain conclusions with regard to the energy audit priorities at MISR:

1. The Solvay plant is the major consumer of energy at the facility. Energy consumption in the form of coke alone is as large as the total energy consumption at the electrolysis plant.
2. The opportunities for improvement at the Solvay plant are probably great because unit energy consumption is considerably greater than standard.
3. The magnitude of the numbers suggest that although there are opportunities to conserve steam both in the process (losses, excessive consumption, etc.) as well as in the boiler house, the greatest potential (and hence the higher priority) lies in the process.
4. The search for other opportunities (primarily coke use) must focus on the process; primarily in the production and the efficient use of lime.
5. Opportunities which can increase productivity (tons/day of soda ash) will have important benefits since usually a large component of energy consumption (steam and electricity) is fixed.

Accordingly, our primary focus in this audit has been on the places where steam can be more efficiently used; how lime production, which is now the plant 'bottleneck', might be increased; and how lime can be more efficiently used.

Section 3
Plant Materials/Energy Profile

Examination of the plant's production/consumption statistics reveals that there is great opportunity for major improvement in energy consumption. Table 3-1 is an analysis of how much materials and energy should be used, according to design standard consumption factors, and how much was actually consumed in recent years. The consumption factors were furnished by the plant. The analysis is complicated in that the mix of products assumed in the design of the plant differs from the actual mix currently made. Table C-1 (Appendix A) provides greater detail, including the unit consumption factors applied to each step of the process. We have compared the unit consumption standards against the theoretical values and conclude that they are generally reasonable; they allow for some inefficiency and losses.

Table 3-2 and Figures 3-1 and 3-2 show the plant's standard and actual energy consumption (refer to Table C-2, Appendix C, for details). The plant's standard for energy consumption (based on one ton of crude soda ash) is about 22.8 GJoules/tonne. Although this number should be somewhat higher than an industry standard for soda ash only (owing to additional energy to produce caustic soda and sodium bicarbonate), it does compare well with a reported industry standard for the Solvay process of 18.4 GJoule/ton[1]. On the other hand, the plant's actual consumption of energy has been on the order 38 to 41 GJoules/ton in recent years.

Although any analysis will be hampered by a lack of reliable data, owing to the lack of operable instruments, the conclusion - based on actual purchases of fuels, electricity, and materials - is clear: energy consumption approaches twice the design and industry standards for manufacture of soda ash and its derivatives.

(1) Austin, G. T., Shreve's Chemical Process Industries, 5th Edition, McGraw Hill Book Company.

TABLE 3-1
SUMMARY OF PRODUCTION/CONSUMPTION STATISTICS

		DESIGN	YEAR 83/84	YEAR 84/85	YEAR 85/86	YEAR 86/87
NET PRODUCTION						
Soda Ash	Tons	35000	48471	49115	46000	48700
Caustic Soda		42000	21558	16450	21081	21050
Sodium Bicarbonate		2000	4478	2568	3793	5578
GROSS PRODUCTION						
1.0 Crude Soda Ash						
Total	Estimated Tons	99400	83942	75587	80276	84179
CONSUMPTION						
2.0 Limestone						
Standard	Tons	213220	152241	131163	146521	151533
Actual Consumption	Tons		244880	257311	264177	262509
2.0 Limestone	Percent of Std.		160	196	180	173
3.0 Coke						
Standard	Tons	19334	13545	11604	13046	13469
Actual Consumption	Tons		21424	19870	21354	22516
3.1 Coke Dose (x10)	Kg/Ton Limestone		874	772	808	857
4.0 Salt						
Standard	Tons	178920	151096	136057	144497	151523
Actual Consumption	Tons		192882	194862	193917	202738
4.0 Salt	Percent of Std.		127	143	134	133
5.0 Ammonia						
Standard	Tons	994	839	755	802	841
Actual Consumption	Tons		1128	1202	1147	1059
5.0 Ammonia	Percent of Std.		134	159	142	125
6.0 Steam						
Standard	Tons	392698	313675	278330	300518	313969
7.0 Fuel Oil (Mazot)						
Standard	Tons	39269	31367	27833	30051	31396
Actual Consumption	Tons		60617	59138	58256	61073
7.0 Fuel Oil (Mazot)	Percent of Std.		193	212	193	194
8.0 Electric Power	Kwh (x1000)		32133	31989	26547	25014

TABLE 3-2
SUMMARY OF ENERGY CONSUMPTION STATISTICS

		DESIGN	YEAR 83/84	YEAR 84/85	YEAR 85/86	YEAR 86/87
GROSS PRODUCTION						
1.0 Crude Soda Ash	Estimated Tons	99400	83942	75587	80276	84179
SPECIFIC CONSUMPTION	Kcal (x1000)/Ton Crude Soda Ash					
3.0 Coke		1361	1786	1340	1862	1872
7.0 Fuel Oil (Mazot)		3792	6932	7510	6966	6964
8.0 Electric Power		276	329	364	284	255
Total	Kcal (x1000)/Ton	5431	9048	9715	9113	9092
	KJoule (x1000)/Ton	22756	37912	40705	38184	38099

Figure 3-1: Specific Energy Consumption

MISR Chemical Company

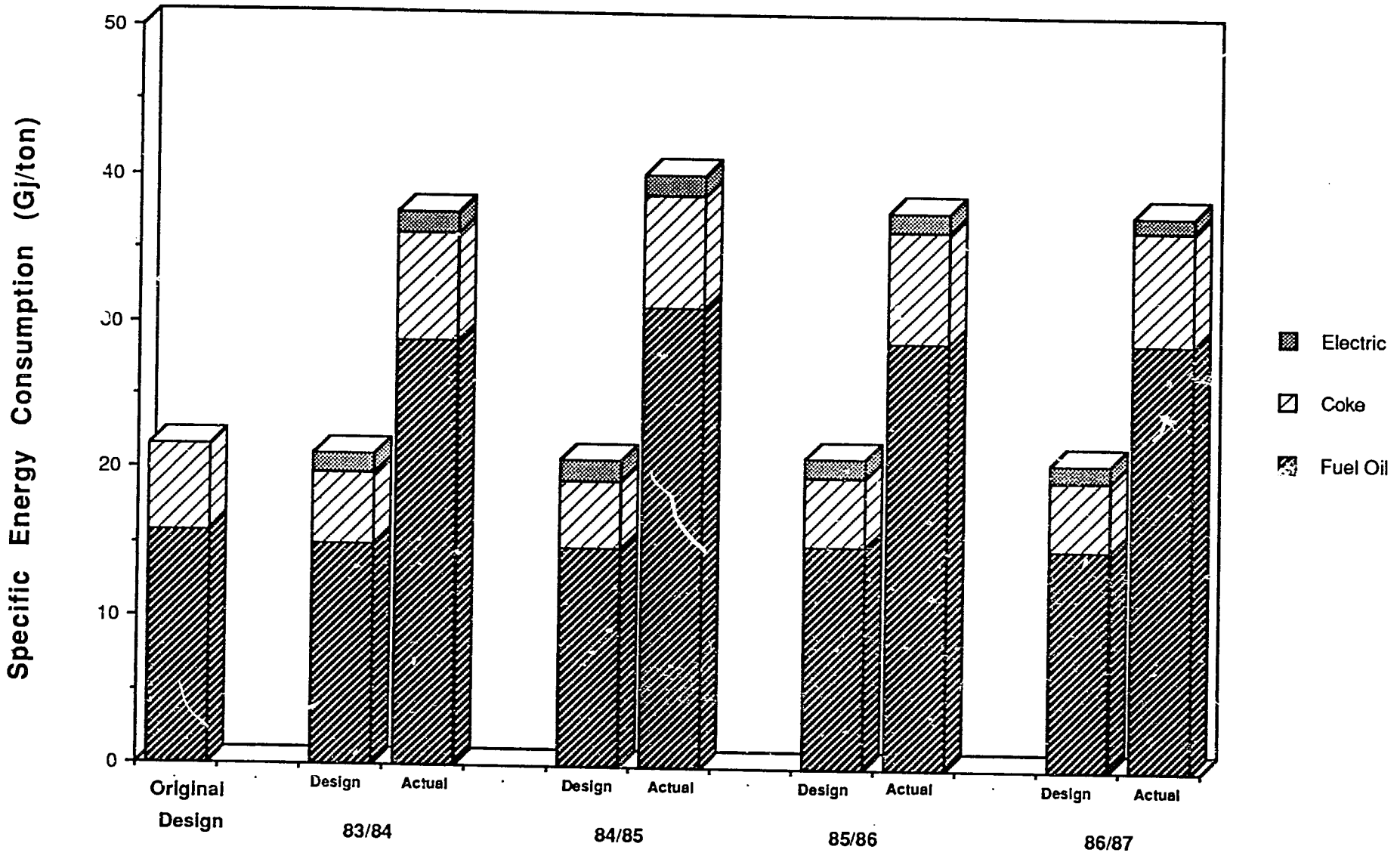

Note: (1) Design specific energy consumption varies, depending upon product mix
(2) No design value for electric power consumption
(3) Design electric taken at actual electric
(4) Specific energy consumption is per ton of crude soda ash equivalent

Figure 3-2: Historic Production/Specific Energy Consumption MISR Chemical Company

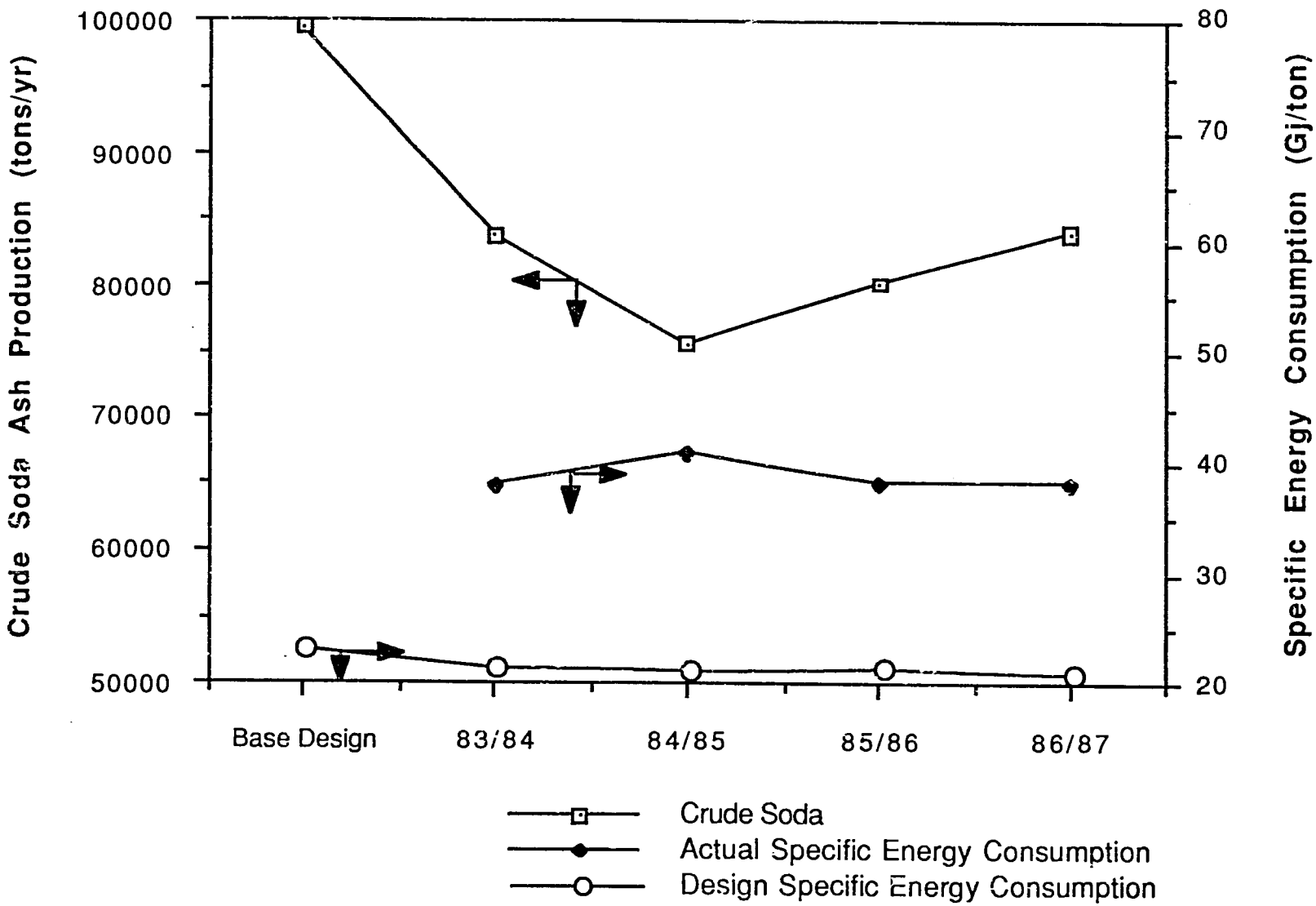

Note: Specific energy consumption is per ton of crude soda ash equivalent

Section 4
Main Engineering and Economic Data

4.1 Energy Prices and Cost Estimates

For purposes of this analysis, the following fuel data has been used consistently throughout the various audits:

Fuel	Heating Value (GJ/unit)	Local Price (L.E./unit)	International Price ($/unit)
Fuel oil (Mazout)	41.9/ton	L.E. 28/ton	$112/ton
Diesel oil (Solar)	44.2/ton	L.E. 78/ton	$151/ton
Coke	29.0/ton	L.E. 193/ton	$ 88/ton
Electricity(1)	10.0/MWh	L.E. 26/MWH	$ 46/MWh

To convert from kilojoules (KJ) to tons oil equivalent, divide by 43.3 x 10^6 KJ/TOE.

Throughout this report, the term ton is used to indicate metric tons of 1000 kg. Annual operating hours are taken at 8000 hours/yr.

Capital cost estimates for the various energy conservation opportunities (ECO's) were developed using standard engineering factored cost techniques. Costs for key pieces of equipment were based on vendor quotes (either U.S. or Egyptian) or from our own internal cost files. All capital equipment cost estimates have been converted to equivalent US dollars at an exchange rate of L.E. 2.2/US$. Equipment cost estimates do not include import duties or taxes.

4.2 Steam Distribution, and Uses (Basis for Recommendations 5.3, 6.1, 6.5)

As noted in Section 3, total steam consumption in the process is well in excess both of design and of norms for this process. Exactly where excessive amounts of steam are being used or lost is difficult to determine because steam is essentially unmetered in this factory. Because the process is continuous, it was not possible to open the high pressure steam lines and install meters during the audit. However, sufficient information is available such that valid engineering estimates can be made for the purposes of sizing and recommending equipment.

Figure 4-1 is a block flow diagram showing generally where steam at different pressure levels is used in the plant. There are three levels of distribution supplied by the power plant; steam is generated at a nominal 36 bar.

30 bar steam: Used for CO_2 dry calcining to soda ash. High pressure condensate is sewered; this is the subject of a recommendation.

---

(1) Note that electricity is converted at its approximate heat input value, not at the theoretical equivalent. Assumed central power station efficiency is 36%.

Figure 4-1: Block Flow Diagram - Steam Distribution
MISR Chemical Company

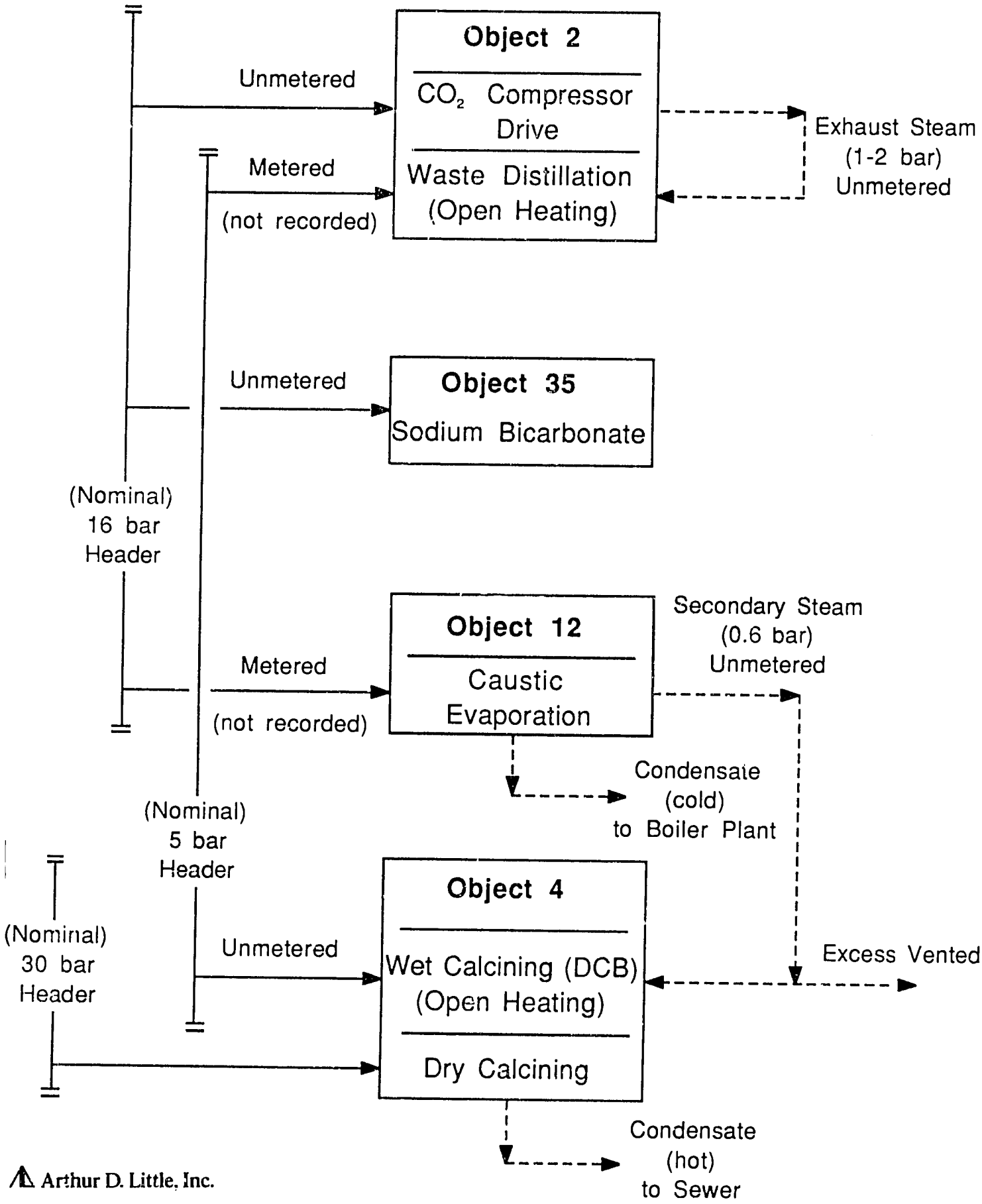

Arthur D. Little, Inc.

16 bar steam: Used for compressor drive in Object 4. Exhaust steam is used in the waste distillation step. The exhaust steam is used for direct heating, thus the condensate cannot be recovered and is discharged with plant waste.

Used as primary steam in caustic evaporation in Object 12. This steam is metered. Condensate is cooled by exchange against feed; it returns to the boiler.

Used in carbonation of soda ash and drying in Object 35.

5 bar steam: Used to supplement exhaust steam in Object 2, waste distillation, as well as numerous utility uses. The use in distillation is metered. Heating is by direct injection, thus condensate cannot be recovered and is sewered.

Used to wet calcine to soda ash in the DCB columns (Object 4) at times displacing secondary steam from Object 12. Also used in utility service. Generally, heating is direct and condensate joins the process.

Several efforts were made to estimate the quantities of steam in each application/system. The only working steam flow meters were the two mentioned above, and mazout consumption at the boilers is not metered by the plant. The power department and each operating section maintains its own opinion of the quantity used. As in similar instances around the world, the opinion of the former is generally greater than that of the latter. Neither is considered reliable and is not reported here. We estimate the average total steam consumption ranges from 60 to 80 tons/hr. Engineering estimates of steam consumption in individual objects are covered below.

Dry Calcination - Basis for Recommendation 6.5

In Object 4, high pressure steam (30 bar) is used in the dry calcining of sodium bicarbonate to make soda ash. About 1.8 ton steam/ton soda ash is said to be used. Steam condensate from the rotary tube calciner drains to a trap system and then is flashed into a light gauge separator vessel (called by some a silencer). Steam is vented from the vessel; the condensate is sewered (the silencer shows some evidence that perhaps it became overpressured on an occasion; it has a failed weld seam).

The condensate described above was originally returned to the boilers. It contains a large amount of heat. According to plant sources, reuse was discontinued many years ago because oil was found in the condensate. The source of oil would be a small amount of lubricant (Mobil Serecel 200) pumped against the calciner's rotating steam seal. Whether this oil actually resulted in problems at the power station - or whether there was only a fear of a problem - could not be determined. The condensate line is still in place.

The heat value in steam condensate from the calciners should be recovered. We propose a flash tank which would flash the 30 bar condensate to 10 bar, separate the 10 bar flash steam from condensate, feed the flash steam into the existing 5 bar steam header, and return the condensate to the boiler.

The recoverable energy content (in terms of annual furnace oil use) is estimated at 108,500 GJoules. The only problem regarding condensate recovery is to remove traces of lubricant in order to permit reuse in the boiler.

Below is a calculation of energy loss and a valuation at current world prices for furnace oil:

1. Condensate quantity (at 30 bar): 90,000 ton/yr
   50,000 ton/yr soda ash calcined;
   1.8ton steam/ton soda ash

2. Enthalpy data:

Stream	Temp. °C	Press. Bar	Enthalpy KJ/Kg
Condensate	234	30	1009
Condensate	180	10	763
Steam, saturated	180	10	2778
BFW (reference)	25	.03	105

3. Heat Equivalent of Furnace Oil:
   Net heating Value 41,900 KJ/Kg
   Boiler efficiency 75%

4. Annual Energy Loss:

Quantity Ton/yr	90,000
Temperature	234
Pressure	30
Net enthalpy (vs. BFW)[1] GJoule/yr:	81,400
Furnace Oil (savings)[2] equivalent tons	2,590
Export value[3] (at world market) US $112/ton	$290,000/yr

Recovery of this energy in the form of flash steam and via condensate recovery is discussed in Recommendation 6.5, Section 6.2.1.

DCB Tower Operation - Basis for Recommendation 6.1

The two systems, Object 12-Caustic Evaporation (multiple effect) and Object 4-Wet Calcining (DCB towers), appear to have been nicely matched by their designers. Secondary steam at 0.6 Kg/cm^2 from the second stage evaporation is piped to the DCB columns where it supplies the heat of calcining. The heat requirement is said to be 2.8 ton steam/ton sodium carbonate. Steam from the plant 5 bar system is used to supplement the secondary steam, as required (see Figure 4-2). The soda ash solution made in the DCB columns

---

(1) 90,000 (1009-105)(1000) = 81,360 GJoules, rounded to 81,400 GJ.
(2) $(81,400 \times 10^6)/(41.9 \times 10^6)(.75)$ = 2590 tons mazout.
(3) 2590 x 112 = $290,080/yr.

Figure 4-2: DCB Column Operation
MISR Chemical Company

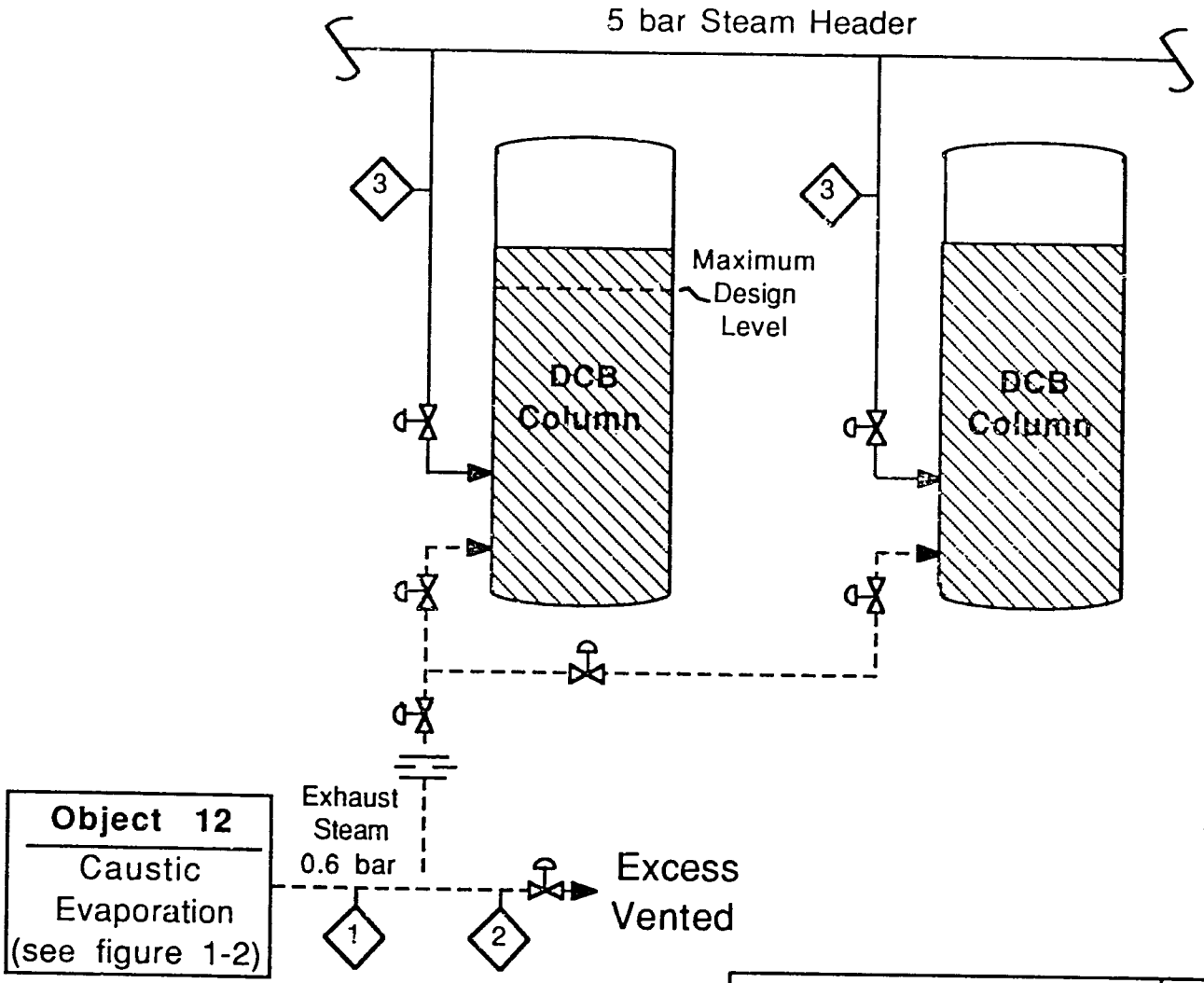

Stream Number		1	2	3
Pressure	(bar)	0.6	0.6	5.0
Design Flow	(ton/hr)	10.6	0.0	0.8
Actual Flow	(ton/hr)	10.6	3.2	4.0

Notes:
- Only one column in operation at a time
- All flow rates shown are average

(from bicarbonate slurry) is mostly used in caustic manufacture (from whence comes the secondary steam). A smaller quantity of soda ash solution is used in bicarbonate production.

We could not find a design flow sheet for Object 12; however the Object 12 supervisor reports inlet and outlet concentrations of caustic in the second effect, which is sufficient information to estimate the steam balance:

1. Object 12 secondary steam:

Evaporator Second Effect	Inlet	Outlet	Difference
Concentration g/l	180	540	
Equivalent wt. %	15.4	38.1	
Ton water/ton caustic	5.49	1.63	3.85
Secondary steam/ton caustic			3.85

With a typical annual production of 22,000 ton caustic, this represents secondary steam production of 85,000 ton/yr (3.85 x 22,000) or about 10.6 ton/hr.

2. Object 4 DCB column requirements:

	Equivalent Soda Ash (ton)
For caustic (22,000 ton)x106/80	29,150
For bicarbonate (5500 ton)x106/168	3,470

With a typical annual production of 32,620 ton soda ash, this represents DCB steam requirement of 91,300 ton/yr (32,620 x 2.8) or about 11.4 ton/hr.

This heat and material balance confirms that wet calcining is a major energy user. It suggests that little, if any, 5 bar steam supplement should normally be needed to operate the DCB columns. Unfortunately, it seems that this is sometimes not the case. Sometimes the secondary steam is vented when a DCB column is fed at too high a rate. This is because column pressure rises due to the hydraulic load, raising the back-pressure against the evaporator, and forcing venting to maintain evaporator performance.

Recovery of this loss of energy, in the form of excessively vented steam, is discussed in Recommendation 6.1, Section 6.1.1.

Energy Monitoring Instrumentation - Basis for Recommendation 5.3

Proper management of energy use (and of plant operations) requires a knowledge of steam usage. The plant, when built, was furnished with orifice type metering stations in the boiler house on the supply into each of the main plant headers (30 bar, two - 16 bar, and 5 bar--see Figure E-1, Appendix E). Each of these stations was fitted with an integrator or totalizer. Each station has been abandoned for many years. The plant reports many problems maintaining instruments: in this application flow integrators were singled out as being particularly troublesome to maintain.

Orifice meters (d/p measurement) have proven over the years to be the most practical, economic, and reliable means to measure steam flow. Experience shows that meters (flow rate), read and recorded regularly, can be an entirely satisfactory method for estimating and managing steam use. Integrators are not recommended in this application at MISR.

The plant has at least two steam metering stations that do work (Object 2 and 12). Thus, the plant does have the capability to maintain such instruments. The rehabilitation of the boiler house steam meters is discussed in Recommendation 5.3, Section 5.3.

4.3 Uses of Lime in the Process (Basis for Recommendations 6.2, 6.3)

Efficient use (minimal loss) of lime is important because lime production is the bottleneck in soda ash production. By improving lime utilization, soda ash production will increase. Since steam consumption in Object 2 tends to be fixed, increasing production will decrease unit consumption of steam.

Figure 4-3 is a schematic diagram showing the essential features of the waste distillation section of Object 2. The figure also contains a lime (CaO) balance based on the factory's central laboratory analysis of lime milk and distiller waste during a recent one month period (said to be normal). It is possible to develop a calcium material balance from these data and, from this, to infer the efficiency of lime use. The essential information and results are included on Figure 4-3.

An estimate of the difference between theoretical and actual utilization efficiency of calcium oxide is 19% (see Figure 4-3-Inferred Losses). This estimate is based on composite laboratory analyses of lime milk and distiller waste (in the month December 1987). The steam consumption alone in Object 2 is thought to be more than 25 ton/hr. We believe at least half such lime losses could be recovered: the effective steam energy savings would amount to 1.25 ton/hr, a savings of about 36,000[1] GJoule annually, not to mention benefits in coke, electricity, and limestone consumption nor increased soda ash sales revenue.

The operations management is obviously aware of the importance of control in this part of the plant; two of the critical flow control stations (flow element and control valve) are maintained in working order. These are listed as C/M-1 (Filter Lye feed) and C/M-2 (Lime Milk feed) on Figure 4-3. The plant also meters the amount of supplemental 5 bar steam used - see C/M-3. However, the important measurement of total steam to distillation is not available (see C/M-4, abandoned). Additionally, the operating unit has its own control laboratory which analyses the critical streams in this system each 30 minutes. They use a rapid analytical method which returns a result to the control room (adjoining), probably within 15 minutes of having taken the sample.

---

(1) 5 bar steam with superheat - H = 2784 KJ/kg
5 bar BFW - H = 105 KJ/kg
(1.25 ton/hr)(8000 hr/yr)(2784-105)/(0.75) = 35.7×10^3 GJ rounded to 36,000

Figure 4-3: Waste Distillation Schematic and Lime (CaO) Balance

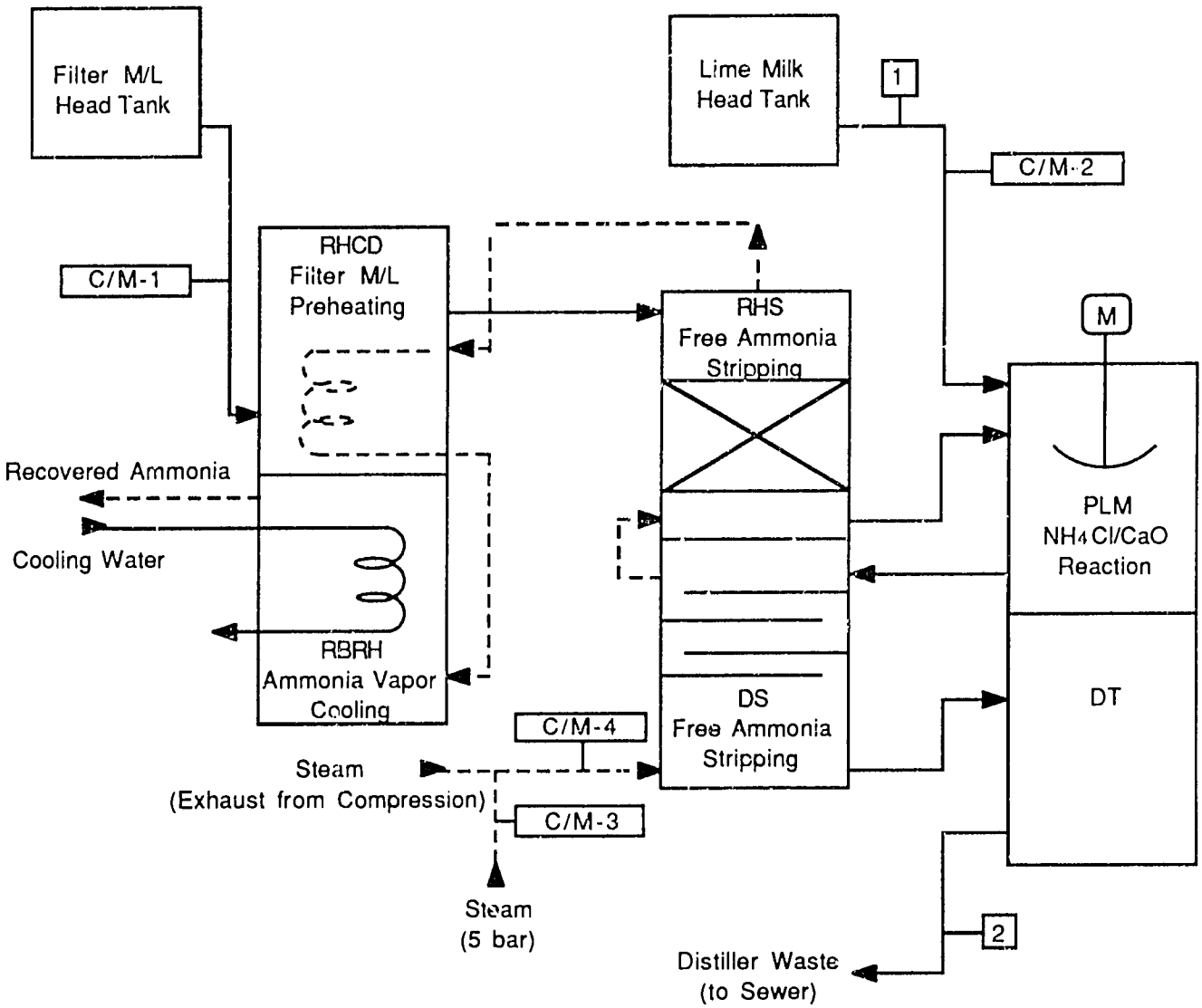

lotes:

:ontrol/Metering Stations:

C/M-1	Filter M/L Feed	(Functioning)
C/M-2	Lime Milk Feed	(Functioning)
C/M-3	5 bar Steam Inlet	(Functioning)
C/M-4	Total Steam Inlet	(Abandoned)

Liquid Flow ——▶
Vapor Flow - - - -▶
(Steam,Ammonia)
All Liquid Flow by Gravity
(except where noted)

Stream [1] Lime Milk

Stream [2] Distiller Waste (control point)

Analysis (Composite)	Stream [1] Lime Milk %	Stream [1] Lime Milk Normalized to 100 mol Ca	Stream [2] Dist Waste g/L	Stream [2] Dist Waste Normalized to 100 mol Ca
Calcium Carbonate (CaO_3)	29.12	19.90	32.50	26.02
Calcium Oxide (CaO)-total	65.66	80.10	5.96	8.52
Calcium Oxide (CaO)-reactive	N/A	N/A	4.61	(6.59)
Calcium Chloride ($CaCl_2$)	--	--	90.75	65.46
		100.00		100.00

Inferred Losses	As moles of CaO	As % of 65.46
Loss 1: Excess Lime Feed	6.59	10.1
Loss 2: $(NH_4)_2CO_3$ in RHSB Outlet	6.12	9.3
Total	12.71	19.4

Arthur D. Little, Inc.

It is critical to feed sufficient lime (CaO) to PLM lest ammonia be lost with the distiller waste. The relative values of ammonia and lime dictate sacrifice of some lime to save ammonia. For this reason, excess lime is fed to PLM and the amount of excess is controlled by analysis at stream 2 (Figure 4-3). The control quantity is said to be 2.4 - 3 (normal divisions/20). Our inspection of the control records showed an average of 3.2 (ND/20) with more than half exceeding 3.0 and none less than 2.4. Based on the control laboratory's analysis of filter lye during the same period (and adjusting for dilution by lime milk in PLM), an average of 3.2 (ND/20) for CaO in stream 2 would amount to about 10% of the lime being fed. This correlated well with the estimated loss based on independent measurements leading to the estimate of Loss 1 (Figure 4-3). Reduction of this loss by adjusting the distiller end point is discussed in Recommendation 6.2, Section 6.1.2.

Another possible loss is that resulting from soluble (ammonium) carbonates leaving RHS to react with lime in PLM. We are not aware of any routine control analysis for this effect. We estimate this loss to be about 9%, based on material balance alone (Loss 2, Figure 4-3). Probably the most important control points will be the quantity of steam and the effectiveness of stripping in RHSB. This will be difficult to assess without steam flow measurement (C/M-4). Reduction of this loss by controlling the RHSB stripping efficiency is discussed in Recommendation 6.3, Section 6.1.3.

4.4 Lime Kilns (Basis for Recommendation 6.7)

The lime kilns have been one of the most serious problems in the factory from the beginning. The kilns have been unable to produce the design quantity of lime (calcium oxide-CaO). Kiln extract typically has a calcium oxide content of only 65%, the balance being uncalcined limestone (calcium carbonate-$CaCO_3$). Design conditions called for production of 130 ton/day calcium oxide with a concentration of 80%. The plant rates itself at 100 ton/day of calcium oxide with a concentration of 65%.

Although the plant can maintain the design tonnage throughput of limestone - even somewhat more - the offsetting low concentration of calcium oxide in the product results in a continual shortage for the balance of the plant. Additionally, the larger amount of inert material (uncalcined limestone) in the lime milk probably contributes to problems and losses in waste distillation (Object 2) and caustic soda (Objects 11 and 12).

Lime is calcined in refractory lined shaft kilns about 5m diameter by 18m height (see Figure 4-4). There are four kilns; normally three are operated while one is idle (as a spare or in overhaul). The kilns are charged from a weighed charging car with a 1 ton load of limestone which has been topped with a specified 'dose' (kilograms/ton) of coke. Charging is through ports opening into the top of the kiln. Both the limestone and the coke are crushed and screened to remove fine materials. Size range is from about 80mm up to 120mm for limestone and 40mm-60mm for coke.

Air is introduced to the bottom of the kiln and exhaust gases, rich in carbon dioxide, leave the top (at about 150°C). The kiln gas is cleaned to remove dust and taken into compressors (in Object 2) for carbonation of ammoniated brine. Within the kiln, the coke, mixed with the limestone, is

Figure 4-4: Lime Kiln Overview
MISR Chemical Company

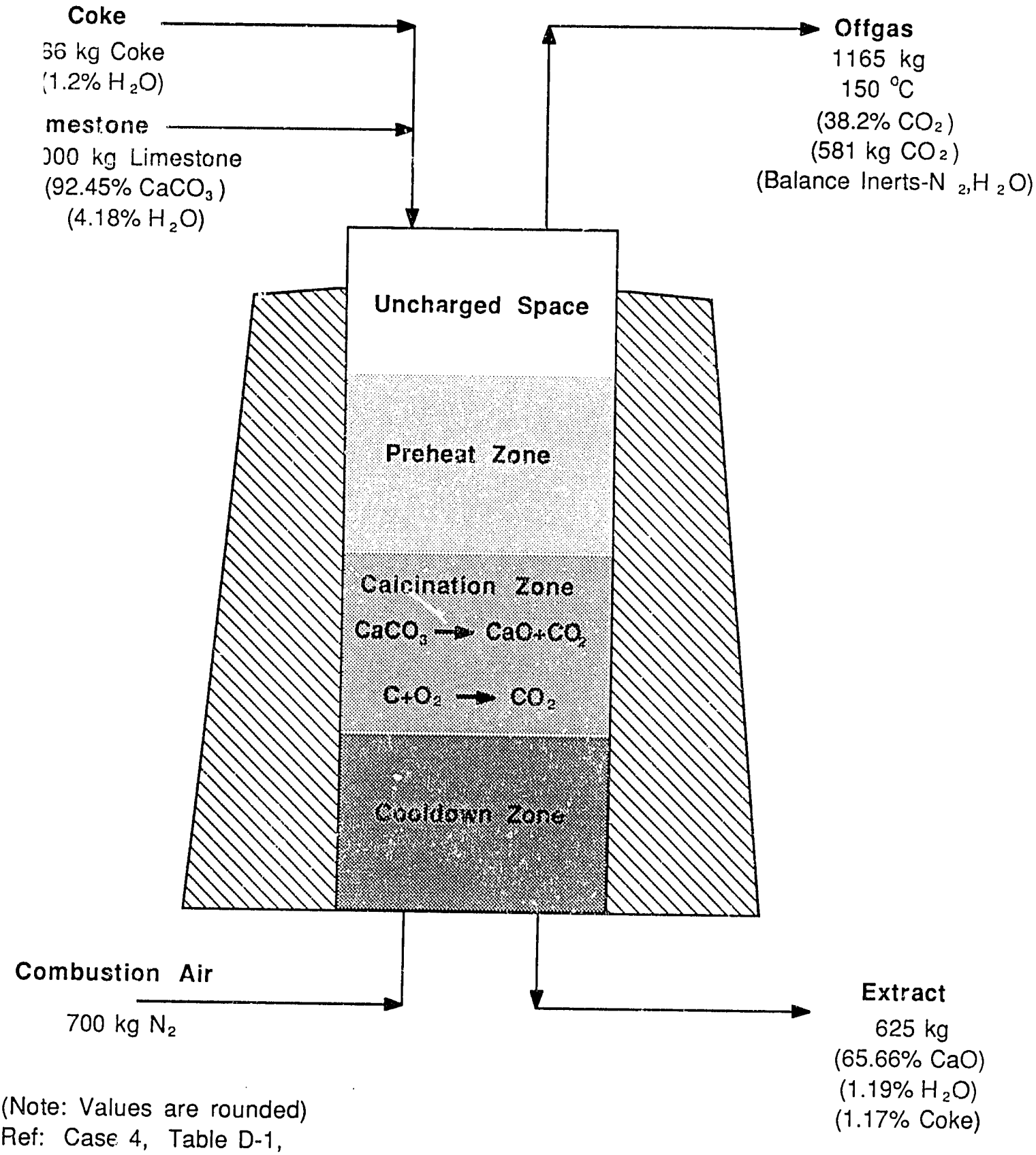

(Note: Values are rounded)
Ref: Case 4, Table D-1, Appendix D
Basis: 1 ton limestone charge

burned by the air entering the kiln. The heat produced by combustion supplies the very considerable heat of calcination as well as the various heat losses in the system. Calcined limestone (called extract) is taken from the bottom of the kiln (at about 100°C), and the lime is either slaked with water to make lime milk or is causticized with a soda ash solution to make caustic.

After the first year's operations with the designer's engineers assisting, the designers concluded that the low kiln output/lime content was due to the poor mechanical strength of the limestone. Material being quarried then (and now) apparently has a much lower compressive strength than material supplied to the plant's designers for evaluation and design basis. The explanation offered of what is happening inside the kiln is that there is channeling, or bypassing. Because of its poor mechanical strength, some of the limestone is being crushed by the burden of the charge above it. Some of the crushed material segregates, is isolated from the coke charge, and passes through the kiln unscathed - or, at least, uncalcined. To minimize this effect, the kilns are presently operated with a short charge; some 5m of uncharged space is regularly maintained over the bed.

The 1985 study (refer to Section 2) devoted much effort to this question, seemingly arriving at the same conclusion. The report includes seven pages of calculations to arrive at a heat balance which we believe to be incorrect. The balance assumed a 10% loss to radiation and convection (rad/conv) from the kiln body, in addition to the losses which can be calculated (drying limestone and coke, sensible heat of kiln gas and extracted lime). It found a thermal efficiency of 80%. But, a quick estimate will show the calculable losses alone to be nearly 20%, apart from the assumed 10% rad/conv loss.

To test the current appraisal of the situation, we made two heat and material balance studies. For a base case, we took the current (December 1987) lime and coke analyses, and the average 1986/87 coke dose. Limestone moisture and exit temperatures from the kiln were taken as reported by operations personnel.

Our first study comprised a series of parametric runs varying the assumed rad/conv loss from 10% to 30%. The result of the computation indicates, in addition to much other information, exactly how much coke would need to bypass the kiln (leave unburned) in order to satisfy the heat and material balance.

This study is summarized in Table 4-1 (see Table D-1 for details). Given the nature of the kiln and the available analyses, there are only two possible conclusions:

- If the rad/conv loss is as small as 10% (as assumed in the University Study), then about 25% of the coke must pass through the kiln unburned.

- If only a negligible amount of coke passes through the kiln, then the rad/conv losses must be more than 10%.

TABLE 4-1

LIME KILN HEAT AND MATERIAL BALANCE

SUMMARY - SEE TABLE D-1

EFFECT OF RADIATION AND CONVECTION LOSS

INPUT DATA		CASE 1	CASE 2	CASE 3	CASE 4	CASE 5
AT LOSS TO RADIATION AND CONVECTION (% OF HEAT RELEASED)		10.00	15.00	20.00	25.00	30.00
KE DOSE (Kg Coke/Ton Limestone)		85.7	85.7	85.7	85.7	85.7
alysis. Lime, %: Calcium Oxide		65.66	65.66	65.66	65.66	65.66
Calcium Carbonate		29.12	29.12	29.12	29.12	29.12
Magnesium Oxide		1.19	1.19	1.19	1.19	1.19
lorific Value. Coke, Kcal/Kg (Dry Basis)		6939.24	6939.24	6939.24	6939.24	6939.24
HEAT AND MATERIAL BALANCE (BASED ON INPUT DATA)						
TAL HEAT RELEASED IN KILN (Kcal)		435516	462680	493458	528623	569185
LCIUM OXIDE (CAO) CONTAINED IN EXTRACT, kg		409.8	409.8	409.8	409.8	409.8
FICIENCY(1): Heat of calcining/Total Heat Released	%	73.99	69.65	65.30	60.96	56.61
FICIENCY(2): Heat of calcining/Calorific Value of Dose	%	55.58	55.58	55.58	55.58	55.58
TIMATED COKE IN EXTRACT: Kg (Dry basis)		20.7	16.8	12.4	7.3	1.5
COKE IN EXTRACT: Percent of Coke Dose	%	24.88	20.19	14.88	8.82	1.82
CARBON DIOXIDE IN KILN GAS:	%	40.96	40.07	39.15	38.20	37.22
CONVERSION OF AVAILABLE CALCIUM CARBONATE	%	80.10	80.10	80.10	80.10	80.10
tracted Lime, Kg		624.1	624.1	624.1	624.1	624.1

TABLE 4-2

LIME KILN HEAT AND MATERIAL BALANCE

SUMMARY - SEE TABLE D-2

EFFECT OF CALCIUM CARBONATE CONVERSION (CaO IN LIME)

(RADIATION AND CONVECTION LOSS: 25%)

INPUT DATA		CASE 1	CASE 2	CASE 3	CASE 4	CASE 5
T LOSS TO RADIATION AND CONVECTION (% OF HEAT RELEASED)		25.00	25.00	25.00	25.00	25.00
lysis. Lime, %: Calcium Oxide		65.00	70.00	75.00	80.00	85.00
Calcium Carbonate		29.78	24.78	19.78	14.78	9.78
Magnesium Oxide		1.19	1.19	1.19	1.19	1.19
orific Value. Coke, Kcal/Kg (Dry Basis)		6939.24	6939.24	6939.24	6939.24	6939.24
HEAT AND MATERIAL BALANCE (BASED ON INPUT DATA)						
AL HEAT RELEASED IN KILN (Kcal)		525176	547822	569349	589838	609362
E DOSE (Kg Coke/Ton Limestone)		77.6	80.9	84.1	87.1	90.0
CIUM OXIDE (CAO) CONTAINED IN EXTRACT, kg		407.0	427.2	446.4	464.7	482.2
ICIENCY(1): Heat of calcining/Total Heat Released	%	60.96	61.28	61.56	61.80	62.02
ICIENCY(2): Heat of calcining/Calorific Value of Dose	%	60.96	61.28	61.56	61.80	62.02
IMATED COKE IN EXTRACT: Kg (Dry basis)		0.0	0.0	0.0	0.0	-0.0
COKE IN EXTRACT: Percent of Coke Dose	%	0.00	0.00	0.00	0.00	-0.00
CARBON DIOXIDE IN KILN GAS:	%	38.20	38.26	38.31	38.36	38.40
CONVERSION OF AVAILABLE CALCIUM CARBONATE	%	79.58	83.45	87.13	90.62	93.94
acted Lime, Kg		626.2	610.4	595.3	580.9	567.3

Any unburned coke would end up as black solids in the lime milk (a white liquid). The plant has never analyzed lime milk for fixed carbon. However, that it could contain about 25% of the coke dose and not be apparent visually is difficult to imagine. A small amount of solids is rejected from the slakers. We made an inspection to estimate carbon/coke rejection. We do not believe that there is sufficient coke in the slakers to support the original rad/conv loss assumption (25% of charge dose).

In order to accept the original conclusion (bypassing of coke), we must also accept the hypothesis of a coke channel through the kiln, which sees no combustion air. (This must be in addition to the coke-free limestone channeling hypothesis.) The burden of all these assumptions is too heavy. We lean to the alternate conclusion: the rad/conv heat loss is substantially greater than previously supposed.

Accepting the hypothesis for the present, that the rad/conv losses are larger than previously considered realistic, then the question arises: what coke dose level would be necessary to obtain good conversion to calcium oxide? To study this question, we prepared an analysis in which the dose level is calculated: a dose exactly matching all the heat losses plus the heat to calcine limestone.

A series of cases was developed, analyzing the effect of CaO in the product, ranging from 65% up to 85%. This study is presented in summary in Table 4-2 (complete details in Table D-2). Assumed rad/conv loss is 25%. The results in Table 4-2 (and Table 4-1) point to the possibility that the kilns may be underdosed and to increase dosage could lead to better CaO conversions.

Naturally, this conclusion reached on the part of this survey will require a lengthy and detailed analysis on the part of the plant before any action is taken. To assist the plant in their analysis, Tables D-1 through D-5, Appendix D, are presented, giving complete details of each study. For purposes of evaluating other variables, parametric or sensitivity analyses were made by varying limestone moisture and kiln exit temperatures as well (Tables D-3 through D-5). All factors and conversions applied are listed in Table D-0. The calculations are given in Appendix G.

To reduce these losses, a detailed lime kiln study (approximately one year in duration) is warranted. The approach to conducting the required lime kiln study is contained in Recommendation 6.7, Section 6.2.3.

4.5 Steam Generation (Basis for Recommendations 5.3, 6.4, 6.6)

The steam generation system at MISR Chemicals consists of 4 boilers rated at 50 tph steam production each. Boilers #1-#3 were built in 1975; boiler #4 came on line in 1984. A fifth boiler rated at 120 tph MCR is under contract with Deutsche-Babcoke and is expected to come on line in 1989. Although no precise figures are available, plant steam demand is estimated to average about 80 tons/hour (tph). Even with the existing excess steam generation capacity, the plant has continual problems making load because of boiler equipment problems.

The boilers are generally in reasonable condition considering their age. However, as is true for the plant in general, boiler instrumentation is almost completely lacking. This includes flow measurement for boiler feedwater, steam, and mazout, as well as temperature, pressure, furnace draft, etc. This lack of instrumentation makes precise determination of a steam balance virtually impossible.

An attempt was made to measure boiler efficiency, but the extent of air infiltration along with the lack of instrumentation made this virtually impossible. Primary data collected on boiler #4 (the newer of the two boilers to be used when #5 comes on line) are shown in Figure 4-5. Measurements of oxygen (O2) in the boiler backend (after the economizer) were considered unreliable because of the extremely high levels of air infiltration occurring as the ID fan was approached. This also distorted backend temperature measurements. Measurements of flue gas at the inlet to the economizer were settled on as the best compromise. In addition, the flow rate of combustion air was measured at the inlet to the FD fan. A simple material balance shows that air infiltration is substantial, possibly as high as 70% of that entering via the FD fan. (An exact estimate is not known because the furnace oil flow rate is not measured except for total consumption of all boilers on a monthly basis over which period of time several units were in operation.) This appears to be due to excessive draft being created by the ID fan (FD fan flow rate is not unreasonable for estimated mazout consumption).

To estimate likely boiler efficiency, a parametric assessment was done evaluating boiler efficiency and mazout consumption as a function of air infiltration (1) before the economizer section, (2) at the economizer section in the area of the sampling point, and (3) after the economizer section. Results are shown in Appendix E.

Based on these results, boiler efficiency is estimated to be about 75% (HHV basis), versus a more normal level of about 84% for this type of furnace. The main problem appears to be air infiltration and the resulting excess air in the backend of the boiler which cools the flue gas and limits heat transfer.

Recommendations for the boiler are complicated by the level to which boiler instrumentation has deteriorated, by the new 120,000 tph Deutsche-Babcock boiler coming on line in January 1989, and by the possibility of two new boilers being added if the proposed 120,000 tph plant expansion is implemented. We have assumed (1) that the new Deutsche-Babcock boiler will become the primary boiler at the plant, operating at as high an operating factor as is practicable (probably 90-95%); (2) that two of the existing 50 tph boilers will be decommissioned; (3) that two of the existing 50 tph boilers will remain in service, but normally will be on cold standby or at minimal load, except when the Deutsche-Babcock boiler is down for maintenance; and (4) the two boilers associated with the plant expansion will not supply steam to the existing plant.

Based on this, we feel that three recommendations are justified for the boiler house:

FIGURE 4-5: BOILER #4 OPERATING DATA - MISR CHEMICAL COMPANY

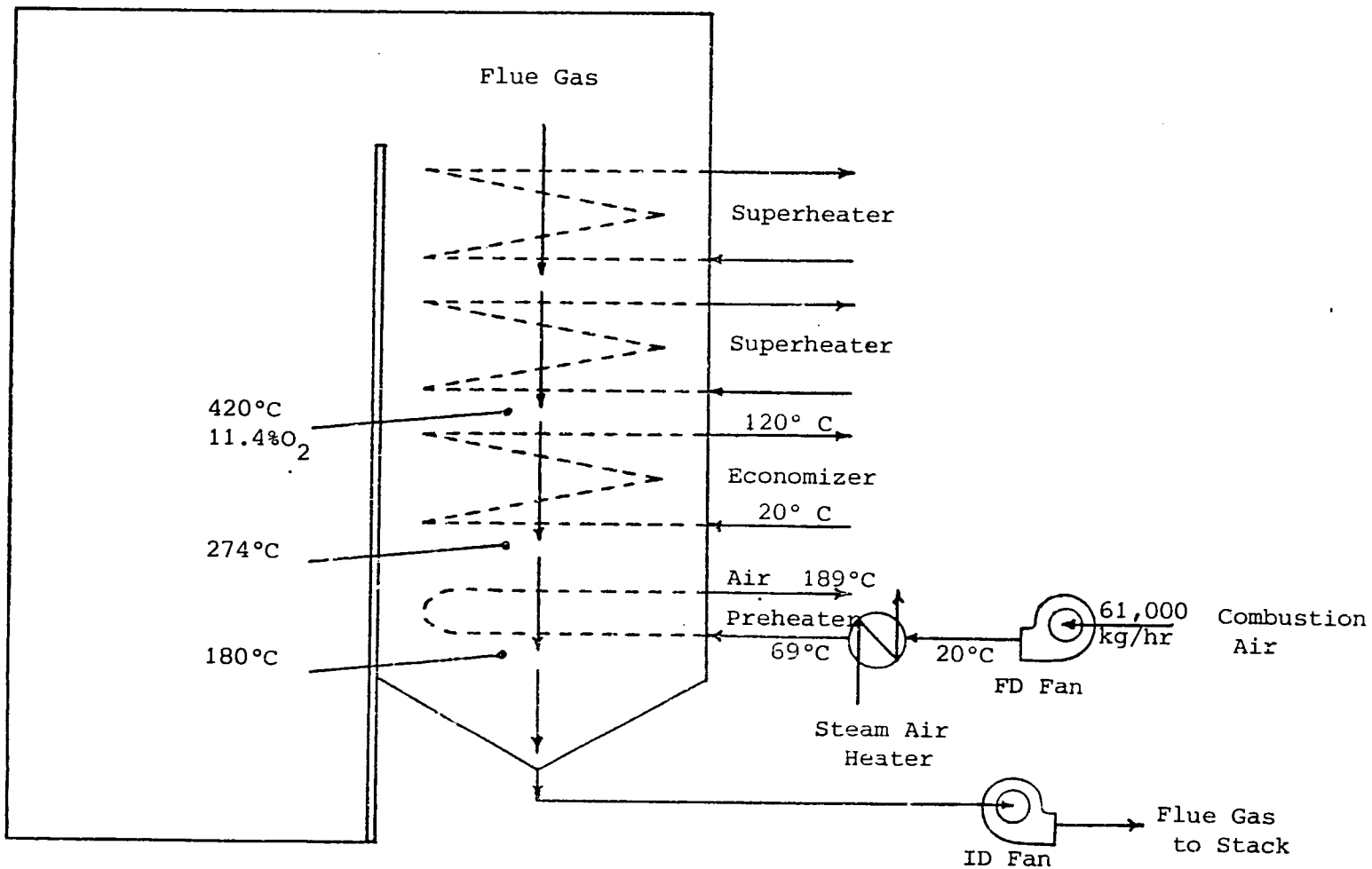

- Recommendation 5.3 - Boiler Instrumentation
- Recommendation 6.4 - Recondition Condensate Hotwell
- Recommendation 6.6 - Excess Air Control

These are discussed below in Section 5 (Recommendation 5.3) and in Section 6 (Recommendations 6.4 and 6.6).

Section 5
Energy Management Improvements

5.1 Recommendation 5.1 - Management and Organization

Undertaking the detail design, procurement, and installation tasks described in Recommendations 5.3, 6.1, 6.3, and 6.5 are all well within the organization's capabilities as now organized. The other programmatic recommendations probably are not.

The greatest technical strength in the factory seems to be concentrated in the operating sections and at the higher levels of management. The most qualified process engineering personnel are burdened with day-to-day operating responsibilities (management of people, maintenance, equipment breakdowns, production schedules, etc.). They are insulated from the often more important considerations of what effects their operating decisions in their own sections will have on the overall performance of the plant. The operations chief does have a staff to collect and record production information but this is essentially a clerical function. This staff is not qualified to manage operations improvement programs.

To overcome these perceived problems, and to seize the opportunities evident from this survey, we recommend the plant establish a process control organization. Its management and staff should include some of the best technical skills available within the plant staff. Reporting relationship should be either to the Chief of Production or to the Technical Chief. (This will depend upon the character of the existing plant organization.)

In addition to office space, the staff must have access to its own (modestly sized) data processing equipment and probably a photocopier.

The process control group would be given the following responsibilities:

- Establish operating standards (in consultation with the operating sections' heads) for the important variables that determine plant performance. This does not mean simple production numbers. It includes flows, temperatures, analytical results, etc. (see, for example, Recommendation 5.3).

- Monitor Operations. Routinely (daily) analyze plant performance against standard. Highlight significant deviations. This implies daily access to all operating data. Advise management when needed in order to return to standard. This task often times requires some redesign of plant log sheets.

- Analyze and develop concepts for improving operations. (The source of concepts can be any place from operations, technical, the literature.) In consultation with operations, design plant testing programs to prove such concepts and to incorporate good results into new operating standards. (Examples of such programs include those of Recommendations 6.2, 6.3, and 6.7).

In order to establish such an organization and implement the program, the plant might consider outside expert advice if it has no in-house experience.

5.2 Recommendation 5.2 - Rehabilitate Process Instrumentation

Precise control of operations and evaluation of performance is difficult, if not impossible, without measurements. Measurements most often means instruments.

The poor condition of plant instrumentation has been discussed earlier in this report and elsewhere. In order to properly manage and control operations and to have any hope of bringing plant material and energy consumption back in line with original design, the major process instrumentation control loops at the plant need to be rehabilitated, repaired, or replaced. A complete survey of all of the factory's instrumentation needs was outside the scope of this present study (there are about 100 major control loops); however, it should be done as an important, early task in a larger program outlined below. In terms of conceptualizing, cost, however, one should be thinking in terms of up to $1 million ($3000-5000 per loop, just for equipment for a simple control loop).

Restoring instrumentation to adequate levels will require these steps:

- Survey. Identify the important instruments either abandoned or missing.
- Program. Develop a list of recommended items (new instruments or repair parts). The program must include adequate stocks of repair parts to maintain the system, once rehabilitated.
- Cost. Identify suppliers and obtain quotations or budget estimates.
- Assessment of Skills. Evaluate the capabilities for repair and maintenance of instruments (personnel, shops, and equipment). Develop a training program (with supplier assistance, if possible). Develop a budget and schedule to upgrade capabilities to requirements.

The next steps are to obtain management approval, funding and to execute the program. Services of an outside expert to assist the factory in these tasks may be advisable. We note that many of these instruments were manufactured by Honeywell. That company should be consulted for assistance. We understand that the plant is already evaluating rehabilitation of about 45 key control loops. We believe it is very important that <u>all</u> major loops be rehabilitated.

5.3 Recommendation 5.3 - Energy Monitoring Instrumentation

In addition to process control instrumentation, it is also important that energy monitoring instrumentation at the plant be rehabilitated and some additional instrumentation installed. As discussed earlier, it is very

important that the plant develop an understanding of how much and where it is consuming energy. This step should be considered before other steps are taken. To understand energy consumption in the plant, it is imperative that instrumentation be functioning and that the resulting data is recorded and analyzed. In order for the instrumentation to be functioning, it is also important that the plant have the necessary skills to repair and maintain the instrumentation.

As a minimum level of instrumentation to be maintained for monitoring energy consumption and steam generation information at the boiler house, we recommend that the following instruments be repaired and maintained in working order:

(2) Mazout flow meter - Total/Recycle
(2) Mazout flow meter - Boiler #1, #4
(1) Mazout flow meter - Boiler #5
(1) Steam flow meter - 5 kg header (existing FE)
(1) Steam flow meter - 30 kg header (existing FE)
(1) Steam flow meter - 16 kg header to Object 12 (existing FE)
(1) Steam flow meter - 16 kg header to Object 2 (existing FE)
(2) Steam flow meter - Boiler #1, #4 (existing FE)
(1) Steam flow meter - Boiler Auxiliary steam
(2) Boiler feedwater flow - (calibrate)

The anticipated energy monitoring instrumentation network is shown in Figure 5-1.

The four main distribution metering stations and the #1 and #4 boiler flow meters will need to be rehabilitated as follows:

Purchase (6) Dp cells and transmitters (pneumatic type) and install in the field.

Purchase (6) steam flow recorders and install in control room (Object 15).

Remove orifice plates, inspect and replace as required. Calibrate instruments.

These measures are estimated to cost $15,000, including the cost of incidental materials (tubing, fittings, etc). It assumes that the orifice flanges can be rehabilitated without being replaced. Labor is assumed to be available at the plant, as the plant maintains similar instruments. The mazout flow meters and new steam flow meter are estimated to cost $10,000. Meter specifications and a breakdown of capital costs are contained in Appendix F.

In addition to the meters outlined above, the meters to individual objects, discussed elsewhere, should also be rehabilitated. At the same time, the plant should ensure that it has sufficient spare parts to maintain the steam flow meters, mazout meters, and O2 analyzers on the new #5 boiler. After completing the work, a systematic program to measure steam

Figure 5-1: Energy Monitoring Recommedations
MISR Chemical Company

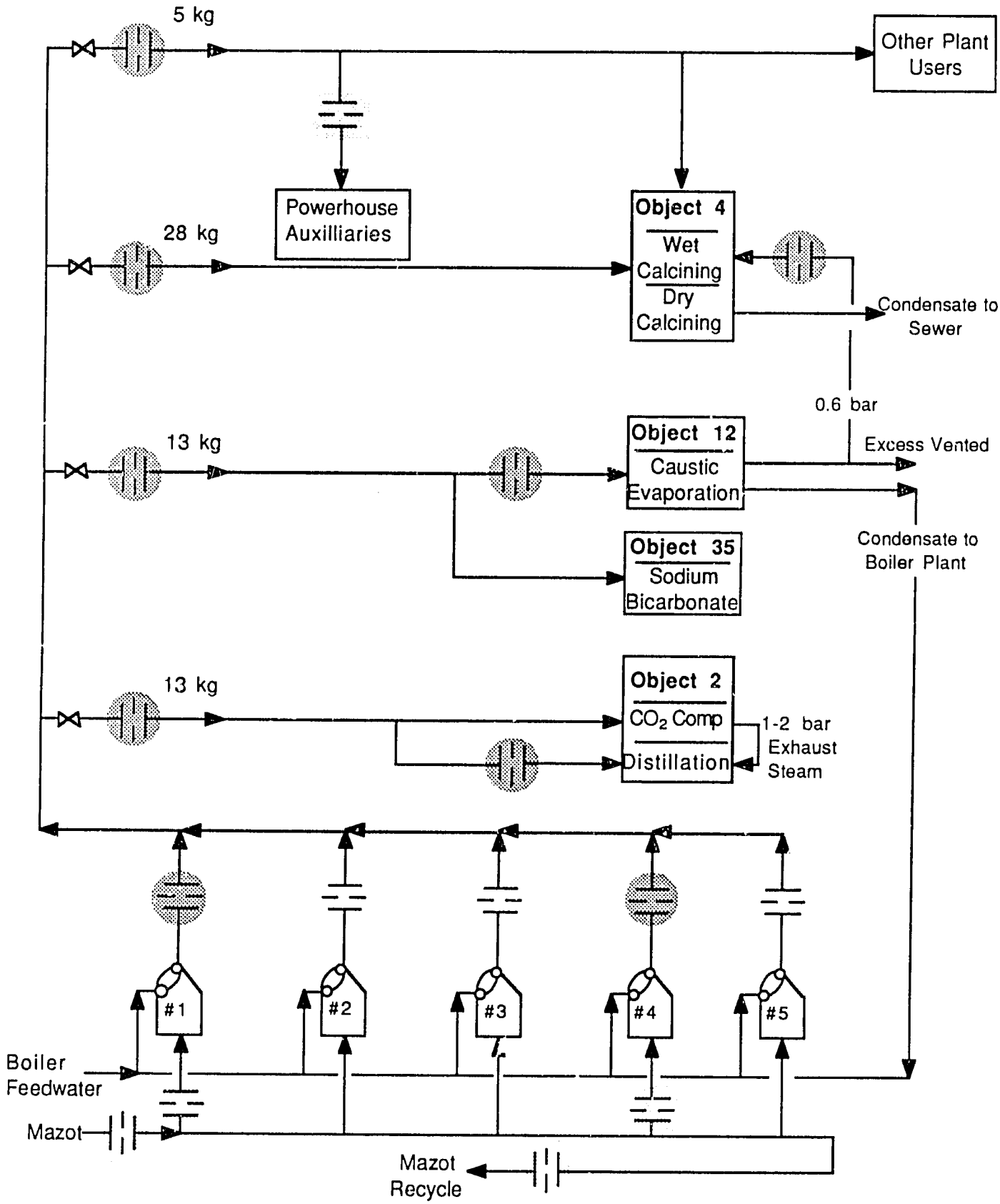

Notes: Plant has dual high pressure header, only one line shown

New
Rehabilitate

consumption in (distribution to) the sections of the plant supplied by these systems should be undertaken.

Section 6
Energy Conservation Opportunities

6.1 Housekeeping and Low Cost/No Cost Recommendations

6.1.1 Recommendation 6.1 - DCB Steam Usage

Utilization of 0.6 KG/cm^2 secondary steam from caustic evaporation can be improved in the DCB columns. The 0.6 KG/cm^2 steam is vented when back pressure at the base of the DCB columns gets too high. This occurs when the columns are run with too high of a liquid level in them which increases the static head in the base of the column (see Section 4.2). Venting the secondary steam line can waste up to 10.5 tons/hr of steam. Estimates of frequency and duration of venting ranged from "very little" up to "30% of the time". (We made four spot checks during the survey and did not observe it happening.)

There are two DCB columns; normally only one column is operated When demand on the DCB columns exceeds the maximum throughput allowable using secondary steam, then place the spare column in operation. Operate both on secondary steam; supplement with only the minimum amount of 5 bar steam to each column to meet process requirements (bottom temperature, pressure, conversion).

Annual energy savings would be:

1) Enthalpy data: 0.6 bar steam 2653 KJ/kg
   0.6 bar condensate 360 KJ/kg

2) Steam savings: (85,000 x 0.30/8000) = 3.19 ton/hr

3) Energy in steam: 3.19 x 8000 (2653-360) = 5.85×10^{10} KJ/yr steam

4) Mazout savings: $(5.85 \times 10^{10}/(0.75)(41.9 \times 10^{6})$ = 1862 ton mazout
   1861.6 x 112 = $208,158/yr

There is a metering orifice in the secondary steam main in Object 4 where this large diameter (550 mm) line approaches the DCB columns. However, the metering station has been abandoned. The DP cell, transmitter, and tubing are all gone. For proper control of the operation and for good management and control of energy use, this station should be rehabilitated.

The economics of Recommendation 6.1 are summarized below:

Annual energy savings: 5.9×10^{10} KJ (1800 TOE)
Capital cost: $2,500
Annual savings: $208,000/yr
Simple payback: immediate
Internal rate of return:(1) >1000%

(1) The relationship between simple payback and internal rate of return is discussed in Appendix J.

The bill of materials for the required equipment is contained in Appendix F; capital cost estimates are also broken down in Appendix F.

6.1.2 Recommendation 6.2 - Adjust Distiller End Point

The distiller end point has a major effect on lime utilization efficiency of the plant. This in turn affects both coke consumption as well as steam consumption. As discussed in Section 4.3, the excess lime (distiller waste) control point (2.4 - 3 ND/20) is probably excessively conservative.

A stepwise reduction to a level of 1.2 - 1.5 is advised. Based on audit observations, such levels would still stay safely in the free CaO range for distiller waste while improving lime use efficiency by 5%. The only effort required with this recommendation is to develop a new operating procedure and to monitor progress. Energy savings are summarized in Table 6-1.

To better monitor control, control stations C/M-1 and C/M-2 should be calibrated, and the recorders furnished with chart paper and ink. This would have minimal cost associated with it.

The economics of Recommendation 6.2 are summarized below:

Annual energy savings:	2.6×10^{10} KJ/yr (coke plus steam - 681 TOE)
Capital cost:	negligible
Annual savings:	$84,600/yr
Simple payback:	immediate
Internal rate of return:	>1000%

The only effort required with this recommendation is to develop a new operating procedure and to monitor progress.

6.1.3 Recommendation 6.3 - RHSB Control

The efficiency with which the RHSB column strips ammonia has a direct impact on the efficiency of the waste distillation and thereby plant lime utilization (see Section 4.3). Increasing ammonia stripping in RHSB will increase lime utilization efficiency. Currently, there is no operating instrumentation on this column.

Potential savings from controlling the stripping efficiency in RHSB are a 9% increase in lime use efficiency (see Table 6-1). To accomplish this will require developing a suitable analytical control method (possibly free ammonia) at the RHSB outlet to waste distillation. Total steam flow should also be measured. To do so will require rehabilitation of flow metering station C/M-4 (see Figure 4-3).

The economics of Recommendation 6.3 are summarized below:

Annual energy savings:	4.7×10^{10} KJ/yr (coke plus steam - 1222 TOE)
Capital cost:	$2,500
Annual savings:	$152,000/yr
Simple payback:	immediate
Internal rate of return:	>1000%

Table 6.1
Waste Distillation Energy Savings
(Recommendations 6.2 and 6.3)

1) From Stream 2, Figure 4-3

	Basis	Distiller Waste	Loss 1	Loss 2
Old	100 mol Ca	65.5 mol CaCl	6.6 mol Ca	6.12 mol Ca
New	100 mol Ca	65.5 + .5(6.59) + 6.12 =74.9 mol CaCl	.5 x 6.6 =3.3 mol Ca	-- --
New	87.5 mol Ca	65.5 mol CaCl	2.9 mol Ca	--

Therefore, (100-87.5) = 12.5% reduction in lime use.

2) From lime balance:

Limestone - 61% to crude soda ash
- 39% to caustic soda

Therefore, (12.5%)(61%) = 7.6% reduction in total lime usage
= 7.6% reduction in coke usage

Annual coke averages about 21,000 ton/yr
Coke savings - 21,000 (0.76) = 1600 coke/yr

3) From Section 4.3, mazout savings are 36×10^3 GJ/yr.

4) For Recommendation 6.2 - 5% Ca loss of a total of 14%

(5/14)1600 = 571 ton coke x 29×10^6 = 1.66×10^{10} KJ/yr coke savings

(36×10^9 KJ/yr)(5/14)(.75) = 0.96×10^{10} KJ/yr steam savings

5) For Recommendation 6.3 - 9% Ca loss of a total of 14%

(9/14)1600 = 1029 ton coke x 29×10^6 = 2.98×10^{10} KJ/yr coke savings

(9/14)(36×10^9)(.75) = 1.74×10^{10} KJ/yr steam savings

The bill of materials for the required equipment is contained in Appendix F; capital cost estimates are also broken down in Appendix F.

6.1.4 Recommendation 6.4 - Recondition Condensate Hotwell

The boiler house uses 5 bar steam for the steam air heater, fuel oil heater, and deaerator. This steam consumption is estimated by the plant to be about 5-6 tph. Although the boiler house was originally built with a condensate hotwell to collect and recycle this condensate, it is no longer used: the hotwell was installed below grade and the unit floods out. Thus, boiler house steam condensate is currently sewered. The potential energy savings from recovering this condensate, assuming a typical 90°C recovery temperature, is about 1.4 mm Kj/hr of steam equivalent. With estimated full load usage of the old boilers at 5-20% equivalent full time (8760 hours) once the #5 boiler is installed, annual fuel savings are estimated to be:

Equivalent Full Load Hours	5%	10%	15%	20%
Mazout savings	19 ton	38 ton	57 ton	76 ton
Annual savings (@ $112/ton)	$2,130/yr	$4,260/yr	$6,380/yr	$8,510/yr

The economics of Recommendation 6.4 are summarized below for the 20% utilization case:

Annual energy savings: 2.4×10^9 KJ/yr (74 TOE)
Capital cost: $18,000
Annual savings: $8,500
Simple payback: 2.1 years
Internal rate of return: 47%

The engineering information for the required equipment is contained in Appendix F; capital cost estimates are also broken down in Appendix F. We recommend that the plant carefully consider implementing this project once the new operating schedule is fully understood.

Additionally, the plant should make sure that the new boiler has a condensate recovery system. As an alternative to installing a new condensate recovery system on the old boilers, it may be more practical to tie them into the condensate recovery system on the new boiler. The annual savings estimate would remain the same but the capital investment cost would be reduced making the payback even more attractive.

6.2 Capital Equipment Recommendations

6.2.1 Recommendation 6.5 - Calciner Flash Steam/Condensate Recovery

Steam condensate from the rotary tube calciner is currently being sewered. The heat value in the steam condensate should be recovered. We propose flashing the condensate in a flash tank to recover 5 bar steam and returning the remaining condensate (after clean up if necessary) to the boiler. To do this, we recommend a two-phase project, each phase being self-supporting:

Phase 1. Install the Condensate Flash Tank/Oil Decanter shown in Figure 6-1. This step will reduce fuel oil consumption by 29,200 GJoules immediately by replacing 1.1 ton/hr of 5 bar steam now made in the boilers. Additionally, by separating seal oil in the tank, it is considered likely that the condensate can be reused in the boilers without further treatment. Naturally, the tank will need to be drained periodically to eliminate any trapped oils (a separate facility to recover costly lubricants to be separated from condensate may be justified but has not been evaluated).

Phase 2. If reuse of condensate in the boiler proves to be troublesome even after separating free oil (foaming in deaerators is the typical symptom), then a condensate polisher for trace oil removal can be installed. A carbon absorption system is included: annual operating costs will be incurred for carbon replacement.

Calculated energy savings are shown below (see Section 4.2 for basis):

	Existing Loss	Recovered Flash Steam	Recovered Condensate
Quantity (ton/yr)	90,000	11,000	79,000
Temperature	234	180	180
Pressure	30	10	10
Net enthalphy (vs. BFW) GJoule/yr	81,400	29,400	52,000
Furnace oil (tons)		936	1,655
Annual savings		$105,000/yr	$185,000/yr

The economics of Recommendation 6.5 are summarized below:

	Phase 1	Phase 2	Total
Energy (steam) savings	29,400 GJ (905 TOE)	52,000 GJ (1601 TOE)	81,400 GJ (2506 TOE)
Capital cost	$ 75,000	$100,000	$175,000
Annual savings	$105,000	$185,000	$290,000
Simple payback	0.7 years	0.6 years	0.6 years
Internal rate of return	139%	176%	161%

The bill of materials for the required equipment is contained in Appendix F. Capital cost estimates are also broken down in Appendix F.

We discussed condensate clean up with Calgon Carbon Corp. regarding absorbant requirements.

Calgon Carbon Corp.
Attn. Mr. Robert Bright
Pittsburgh, Pennsylvania
United States American
Telex: 6711837
Telephone: (412) 787-6815

Additional details and recommendations are contained in Appendix B.

Figure 6-1: Calciner Flash Steam/Condensate Recovery MISR Chemical Company

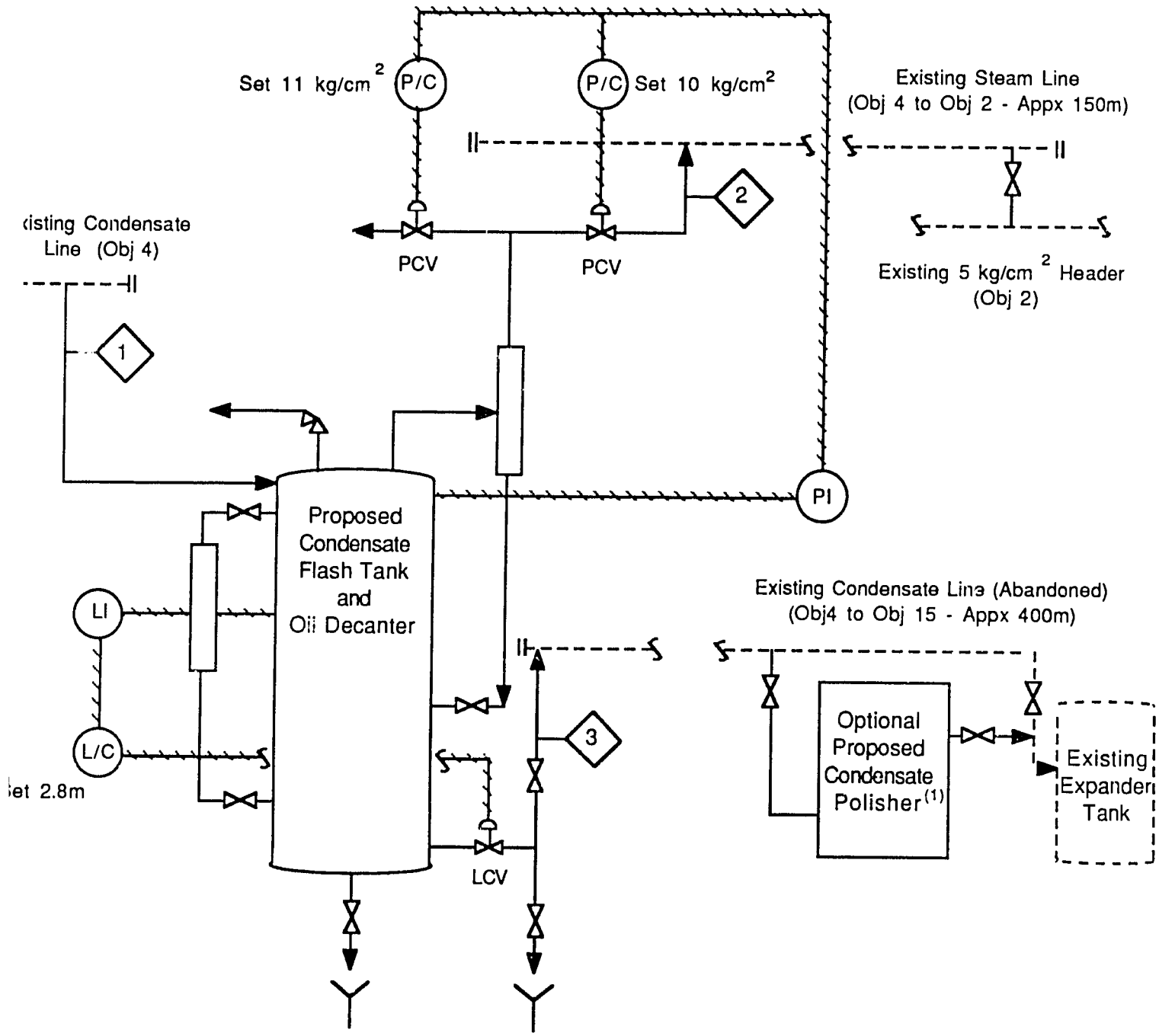

Notes:

Existing Lines - - - - - - -
New Lines ———
New Instrumentation Lines
(1) Carbon Absorption Skid

Stream Number		1 Condensate	2 Steam	3 Condensate
Normal Flow	(ton/hr)	12.0	1.5	10.5
Temperature	(°C)	234	180	180
Pressure	(kg/cm 2)	30	10	10

Clearly, if valued at world market value for furnace oil, this job is economically sound. The maximum payback period for Phase 1 would be 15 months (if Phase 2 equipment were found to be necessary). The more likely payback period would be four months.

If Phase 2 (condensate polishing) were ultimately found to be a necessity, then the payback period for its installation would be eight months (value of condensate only).

6.2.2 Recommendation 6.6 - Air Infiltration and Excess Air Control

Current boiler efficiency is estimated to be about 75% (HHV basis). The main factor influencing this value appears to be the very high level of air infiltration into the boiler, caused by the high draft created by the FD fan. Air infiltration may be as high as 70% of the air coming in via the FD fan. Proper adjustment should allow this value to be decreased by at least 30%, leading to an improvement in boiler efficiency of about 5%.[1] At an estimated mazout consumption of 3500 kg/hr, hourly mazout savings are estimated to be approximately 219 kg/hr.[2] Depending upon capacity utilization of the old boilers after the #5 boiler is on line (based on 8760 hours/yr), annual savings are estimated to be:

Equivalent Full Load Hours	5%	10%	15%	20%
Mazout savings (1 boiler)	96	192	288	384
Annual savings (1 boiler)	$10,800	$21,500	$32,300	$43,000

The economics of Recommendation 6.6 are summarized below for the 20% equivalent usage case:

Annual energy (steam) savings: 2.4×10^{10} KJ (742 TOE)
Capital cost: $24,000
Annual savings: $86,000
Simple payback: 0.3 years
Internal rate of return: 357%

The bill of materials for the required equipment is contained in Appendix F; capital cost estimates are also broken down in Appendix F. The work effort required to implement this option will include rehabilitation, as necessary, of the FD and ID ID fan dampers. Before implementation, the fan dampers should be pulled and inspected during a convenient maintenance outage. This will allow a precise determination of repair materials and requirements to be made.

---

(1) See: North American Manufacturing, Combustion Handbook.
(2) [1 - (.75/.80)]3500 = 219 kg/hr x 8760 x .05 = 96 ton/yr.

6.2.3 Recommendation 6.7 - Lime Kiln Study

To increase calcium oxide production quantity and increase its concentration in lime will require a lengthy and extensive plant testing/development program. However, the goals and potential benefits are extremely important to the plant perhaps more so than those of the other recommendations combined. The general scope of the study is given below:

A. Make a careful, quantitative estimate of the quantity of coke (unburned carbon) discharged with the extract.

B. Develop a stepwise program to increase coke dose and assess results (conversion to CaO). The program must be adequately supported and supervised by fully qualified technical (engineering) personnel and by the central laboratory. It must have full management support.

C. Conduct heat loss surveys of operating kilns and correlate with heat and material balances (OEP has an optical pyrometer which would be useful in carrying out this assignment).

D. Consider employing the services of a senior, qualified process engineering consultant having extensive, specific experience with the Solvay process to act as Technical advisor to the Chief of Production.

The cost of this study will depend upon the extent of local/foreign sourcing. Estimated duration is one year with a level of effort of 6-12 man-months of expert assistance plus technical support (could be provided by plant task force); instrumentation (about $30,000-50,000 depending upon control instrumentation currently being rehabilitated); and data processing support (personal computer plus standard software). Total cost is estimated to be $150,000-$300,000.

The foregoing observations and recommendations are offered with a full appreciation for the excellent qualifications of the MISR Chemicals Company operations and technical staff with which we have become familiar during the course of this survey. Also, we recognize that this appraisal has had to be made without thorough consideration (due to time and budget limitations) for other factors affecting lime kiln operations such as blower capacity, temperature limitations of equipment, mechanical breakdowns, etc.

APPENDICES

Appendix A
Survey Contacts

The following table lists individuals and organizations who participated in this survey:

TABLE A-1
DIRECTORY OF SURVEY CONTACTS

US EMBASSY		
Eric Peterson	Energy Program Officer. USAID Cairo, ARE	
ARTHUR D. LITTLE, INC.		
David E. Kleinschmidt	Project Leader	
David Farrell	Engineer	
CONSULTANT (TO ARTHUR D. LITTLE, INC)		
Gerald K. Ryan	Principal Investigator. San Francisco, USA	
ORGANIZATION FOR ENERGY PLANNING. CAIRO		
Dr. Ibrahim A El-Gelil		
Dr. Hani A. Alnakeeb		
Eng. Anwar Farid Agaybi		
Dr. Mohie Hussein	Depy. Chairman	
MISR CHEMICAL INDUSTRIES COMPANY. ALEXANDRIA		
Chm. Abdul Moez Okeil	Chairman	
Eng. Abd El-Monem Babers	Vice Chmn. Engrg, Technical, Power	
Eng. Ahmed A. Wahba	Engineering General Manager	
Chm. Salah Ghoneim	Chief of Production, Soda Ash Plant	
Eng. Farouk El-Desouki	Production Manager, Soda Ash	
Eng. Fayez El-Bourini	General Manager Power & Utilities	OBJ 15
Eng. Mahmoud Fahmy	Chief Engineer - Powerhouse	OBJ 15
Eng. Mohamed Mokhtar		Coordinator
Eng. Samia Mohamed Zien El-Dine		Technical
Eng. Abd El Menem Eed	Prodn Gen Mgr Soda Ash	OBJ 02
Eng. Abd El Al Shehata	Depy Prodn Gen Mgr Soda Ash	OBJ 02
Eng. Farid Hasan Rabi	Production Director	OBJ 02
Chm. Hasam El-Halfawy	Prodn Gen Mgr Soda Ash	OBJ 04
Eng. Mohamed Tawfeek	Chief Mech. Engineer	OBJ 04
Chm. Hossam El-Dien Mouhamed Kamel	Prodn Gen Mgr Soda Ash	OBJ 01
Eng. Said Azat Said	Prodn Gen Mgr Caustic Soda	OBJ 11, 12
Eng. Azat Ibrahim	Prodn Gen Mgr Pharm. Sodium Bicarbonate	OBJ 35
Chm. Uosria Sewdan	Soda Ash Production Dept. Staff	
Chm. Adel Zeid	General Manager: Laboratory and Technical	
Chm. Farouk El-Sawaf	General Manager: Laboratory	
Chm. Serag El-Den Kamel	Soda Ash Laboratory Manager	
Chm. Ahmed Hamdallah	Laboratory Director	

APPENDIX B
OIL REMOVAL FROM CONDENSATE

We have been in touch with Betz, Amicon Membrane Systems, Zimpro, Camp Dresser McKee, Amcec, Seca, and Calgon. Treated outlet condensate pressure would be above 5 kg/sq cm, which means it would be hotter than 1512°C without need for a pump.

With an oil inlet concentration of 10 ppm, Calgon Sgl 8 x 30 mesh carbon ($1.22/lb FOB Kentucky) at 100°F (38°C) could reasonable hold 0.10-0.15 lb oil/lb carbon. However, an alternative Calgon adsorbent, a 70% mix of specially treated clay and anthracite called Klensorb 100 ($2.13/lb FOB Pennsylvania) at 150°F (66°C) could reasonably hold 0.35 lb oil/lb Klensorb. The Klensorb is more forgiving of spikes in oil concentration and works at a higher temperature than does carbon. Outlet concentration, based on their experience, should be below 1 ppm and often below 0.2 ppm oil. There is even a possibility which you might explore with them that this adsorbent might actually work satisfactorily with uncooled condensate at 180°C. In all of the following, we assume use of the Klensorb adsorbent at 66°C.

At 18 mt/hr, an oil concentration of 100 ppm means removing about 67 lb of oil per week. Assuming a standard 4000 lb bed of Klensorb which could hold 1200 lb of oil, then thrice yearly the client would have to dispose of a slurry of 4000 lb of Klensorb with 1200 lb of admixed oil.

Installation would entail two heat exchangers (not part of the Calgon system). First, HX (800 sq ft) would cool hot oily condensate to 93°C against reheating treated condensate from 66°C to 151°C. Second HX (130 sq ft) would cool oily condensate (from first HX) from 93°C to 66°C against cooling water.

Calgon is prepared to supply a skid-mounted, adsorbent-bed system 8 feet wide by 11 feet long by 11.5 feet high, Model CA 2000-150, including a 4000 lb bed of Klensorb, prefilter, postfilter, transfer/process/effluent piping, sample and drain points, bin handling station, and liquid eductor system for introducing and removing adsorbent. It assumes 80 psi water and 75 psi air utilities are available.

In addition, Seca has indicated they would utilize Amcec or others for construction of a similar unit. The contact is:

Seca Division of Atochem
Attention: Mr. Louis Sorrento
P.O. Box 1250
Pryor, Oklahoma
Telephone: 918/825-5570
Telex: 910840 3549

Seca recommends two C.S. units each 5 feet diameter by 6 feet bed height with granular activated carbon 8 by 30 ($0.92-0.88 lb) based on an inlet temperature of 140°F and 0.1 lb oil/lb carbon, 3300 lbs of carbon per unit is required with a turnaround time of 35 days. Seca is willing to run an isotherm on the oil to arrive at actual loading and life of carbon.

CALGON

CALGON CARBON CORPORATION P.O. BOX 717 PITTSBURGH, PA 15230-0717 (412) 787-6700 TELEX 671 1837 CCC PGH

Writer's Direct Dial Number

412/787-6815

February 2, 1988

Mr. Ed Field
Arthur D. Little, Inc.
25 Acorn Park
Cambridge, MA 02140

Dear Mr. Field:

I appreciated the opportunity to review Calgon Carbon's capabilities with you relative to condensate recovery and the low level removal of oil. As I promised, attached please find literature on our Klensorb 100 (TM) and SGL 8x30 Granular Activated Carbon products which we discussed. I have also attached actual operating data on Klensorb 100's performance in condensate recovery as obtained from Texas Eastman in Longview, Texas.

The Klensorb 100 performance data shows the product's ability to consistently reduce oil concentrations to less than 1 ppm with influent concentration ranging to 50+ ppm. Although you indicated that the Egyptian client application would probably maintain a more steady influent concentration range around 10 ppm, the performance data seems to reasonably profile his situation. Because Klensorb 100 effectively removes insoluble oil, SGL carbon should be employed in combination with Klensorb 100 if lighter, soluble organic fractions are to be reduced.

Additionally, I have enclosed product bulletins on both our Model III and CleanAmine (TM) hardware packages. As we discussed, the CleanAmine equipment might be considered for this application because of the pressure and temperature conditions which exist. (As explained, the CleanAmine package is specifically designed for the treatment of recirculating amine solutions in gas processing applications. I have also included some literature on this application for your information.)

I look forward to hearing from your Mr. Ryan or Mr. Kleinschmidt from Egypt in the near future. Based on their needs, I shall contact our Mr. Geoff Waller with Calgon Carbon's Chemviron subsidiary in Brussels which has direct responsibility for Egypt.

Very truly yours,

CALGON CARBON CORPORATION

Robert L. Bright
Senior Marketing Manager

RLB:kal

Enclosure

CC: Mr. Gerald K. Ryan (Sent by DHL)
Hotel Ramada Room 409
Alexandria, Egypt

Geoff Waller, Chemviron, Brussels
M. M. Clemens

CALGON

CALGON CARBON CORPORATION

KLENSORB 100™

GRANULAR OIL ABSORBENT FOR WATER TREATMENT SYSTEMS

APPLICATION BULLETIN

KLENSORB™ is a proprietary granular absorbent formulation developed for use as a column filtration medium in water and wastewater treatment. The standard product is KLENSORB 100™ which is premixed media comprised 30% by a unique processed clay active ingredient which selectively absorbs insoluble oil and grease (both free and emulsified), and 70% by a granular anthracite filter media. Although "oil loving," KLENSORB 100 wets readily and is very dense and hard. It can withstand the dynamics of hydraulic and mechanical handling associated with slurry transport and backwashing. KLENSORB 100 has a significant oil retention capacity which is independent of the magnitude and variation in influent concentration or flow rate. It is extremely effective, therefore, for water polishing and the protection of downstream unit processes from periodic oil intrusions. When used in conjunction with granular activated carbon adsorption, the combination technologies affords the removal of a broad range of both soluble and insoluble compounds.

TYPICAL KLENSORB 100 APPLICATIONS

- Cleanup of waste lagoons.
- Treatment of wastewater.
- Treatment of gasoline contaminated groundwater.
- Protection from oil spill intrusions.
- Recovery of low pressure steam condensate.
- Oil polishing from ultrafiltration systems.
- Protection of reverse osmosis, desalination, or ion exchange units.

KEY BENEFITS AND ADVANTAGES

The key benefits of using KLENSORB 100 for critical insoluble oil removal applications include:

- **High performance** — consistent effluent oil quality to 1 ppm achievable.
- **Cost effective** — oil absorptive capacity up to 60 weight percent makes KLENSORB 100 cost effective relative to other oil removal technologies.
- **Dependable** — accommodates significant fluctuations in flow rates and influent concentrations with minimal effect on the effluent.
- **Simple to apply** — KLENSORB 100 is employed in conventional sorption media or filtration contactors requiring minimal monitoring and maintenance. It can be easily added to other existing treatment processes.
- **Non-hazardous** — Media itself is unrestricted for landfill or incineration disposal.
- **On-going technical support** — KLENSORB 100 is fully supported by the technical, application, and service resources of Calgon Carbon Corporation.

KLENSORB 100 USE IN COLUMN FILTER SYSTEMS

KLENSORB 100 is available in 10 x 50 mesh size (U.S. Standard Series Sieve Sizes) and is employed in pressurized contactor vessels as a single stage unit process for insoluble oil removal. It is not generally recommended for application in gravity filters.

Where the KLENSORB 100 bed has an extended on stream life, suspended solids removal through chemical clarification and settling may

be recommended. This requirement is commonly associated with conditions of oil removal in lower concentrations (i.e. 0-25 ppm) and high flow rates, or unit process protection from infrequent oil intrusions.

KLENSORB 100 is recommended for column downflow operation in pressure vessels. Activated carbon adsorbers are normally suitable for use as KLENSORB 100 absorption contactors. The pressure drop for fresh KLENSORB 100 is shown in Figure 1. Because the active ingredient swells on application as it absorbs insoluble oil, the pressure drop at any superficial velocity will increase (by approximately 5 times at maximum media saturation) in a solids free stream. If the maximum oil capacity on KLENSORB 100 reaches 50-60% by weight, the associated operating pressure drop will frequently determine the need for KLENSORB 100 replacement.

A backwash curve is also shown for fresh KLENSORB 100 (Figure 2). The physical characteristics of spent KLENSORB 100, however, makes backwashing of spent media with greater than 30-50% oil retention impractical in most instances.

KLENSORB 100 SYSTEM DESIGN CRITERIA

The design criteria for a KLENSORB 100 system is similar to a typical granular activated carbon system. The following design parameters are recommended:

Granular Oil Absorbent.....KLENSORB 100
Bed Depth (recommended).....3 ft. (min.)
Hydraulic Loading (recommended)..... 3-4 gpm/ft.^{2} (max.)
Contact Time (recommended).....15 minutes (min.)
Backwash rate (if required).....(See Chart)
Bed Expansion (if required).....20%

Mechanical features for KLENSORB 100 filter systems should include:

1. Suitable underdrain to assure uniform water flow throughout the KLENSORB 100 bed.
2. Where required, pack gravel around underdrains for applications involving infrequent KLENSORB 100 replacement and high oil loading.
3. Adequate free board to allow for proper bed expansion if backwash capability is necessary. (Note: Bed expansion caused by oil retention in the spent KLENSORB 100 is negligible).
4. Access for potential vacuum removal of spent KLENSORB 100.

SPENT KLENSORB 100 DISPOSAL

Spent KLENSORB 100 is commonly disposed of at either an appropriate landfill facility, or through incineration. Relative to landfill disposal, the composition of fresh KLENSORB 100 is non-hazardous, therefore, the waste classification of the spent material is determined by the constituents removed. Spent KLENSORB 100's fuel value of approximately 14,000 BTU/lb. compares favorably with many grades of bituminous coal.

KLENSORB 100 BED LIFE

The effective life of an on-line KLENSORB 100 bed is principally a function of the **total amount** of insoluble oil removed. Because the effluent water quality is relatively unaffected by the magnitude or fluctuation of the influent oil concentration and water flow rate, the expected bed life for a specific application can be predicted by knowing the in-service KLENSORB 100 volume, the projected average influent insoluble oil concentration, and the projected average flow rate. Conversely, fixing the bed life establishes the required amount of KLENSORB 100 in service. Relative to the insoluble oil concentration, note that the standard freon extraction test for oil and grease may reflect certain soluble constituents (in addition to insoluble oil) which KLENSORB 100 will not remove. Consult your Calgon Carbon Corporation representative regarding your specific application.

KLENSORB 100 TRANSPORT

KLENSORB 100 is shipped either in 75 pound drums or in special bulk hopper trailers. Where applicable, delivery in bulk permits KLENSORB 100 transfer to the contactor vessel via pressurized water slurry. Spent material may then be removed by water slurry depending on system configuration and degree of oil retention. Heavily loaded spent material may require vacuum truck removal.

TYPICAL PROPERTIES

Particle Size (U.S. Standard Sieve Size).....0.5% greater than No. 10/
1% less than No. 50

Moisture.....12%
Water Retention, Drained.....10%
Density.....As Shipped 58lb./ft.^{3}

COMMERCIAL INFORMATION

Standard packaging for KLENSORB 100 is 75-pound drums, with 24 drums per pallet. Pallets are supplied at no charge.

Shipping Point: Austin, Texas

Bulk Shipments by rail car or truck available upon request.

Information concerning human and environmental exposure may be reviewed on the Material Safety Data Sheet and label for this product.

OTHER PRODUCTS

The KLENSORB technology is also available as KLENSORB 120™ and KLENSORB 199™. KLENSORB 120 is a special premix designed for high flow applications and oil "spike" protection. KLENSORB 199 is the unmixed active ingredient which can be blended by the user where desired.

Figure 1

Downflow Pressure Drop Through a Backwashed Column of KLENSORB 100 (80°F)

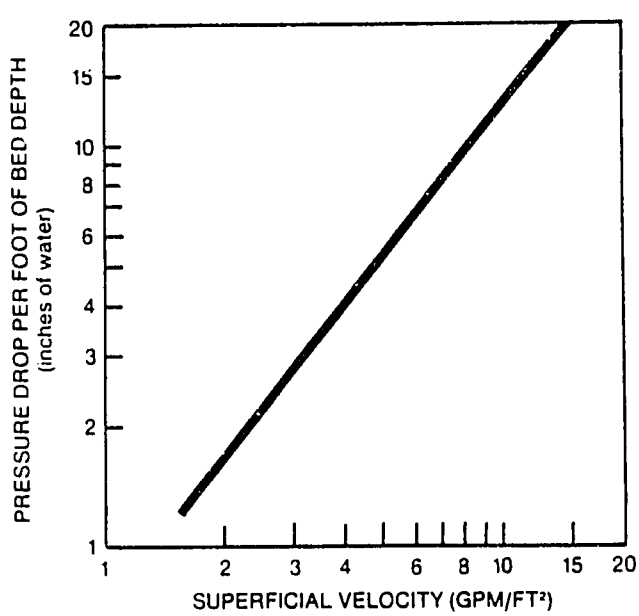

Figure 2

Percent Bed Expansion During Backwashing of KLENSORB 100 (80°F)

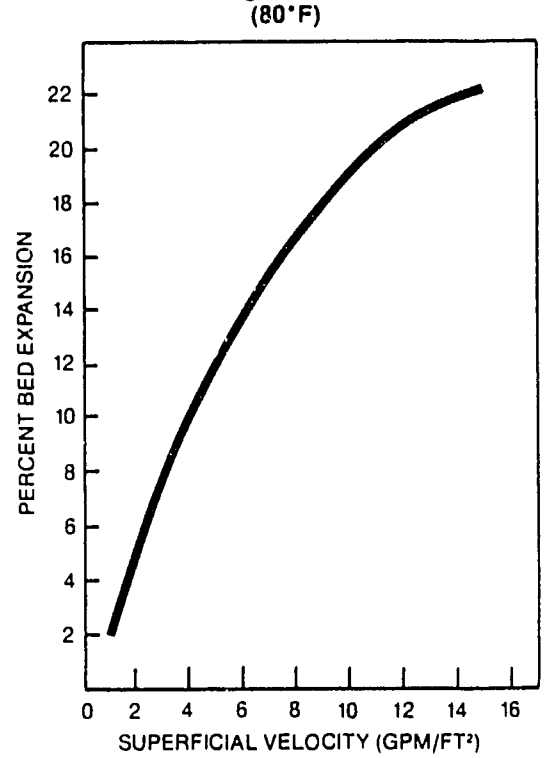

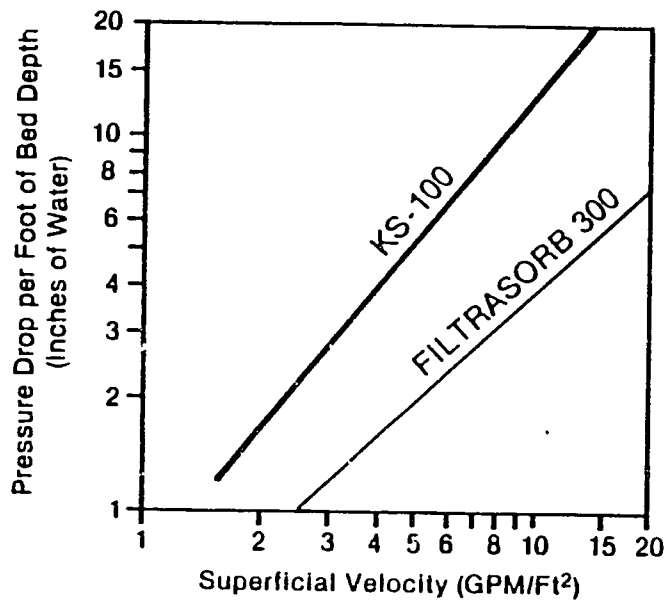

Pressure Drop Through Backflushed Beds Of KLENSORB and FILTRASORB

CALGON

CALGON CARBON CORPORATION

TYPE SGL GRANULAR CARBON

Calgon Carbon Type SGL is a granular carbon designed to efficiently purify and/or decolorize many aqueous and organic liquids. Its particle size of 8 x 30 mesh has been selected to give optimum adsorption characteristics and low resistance to flow with liquids of high viscosity.

Type SGL Carbon is made from selected grades of bituminous coal combined with suitable binders to give superior hardness and long life. Produced under rigidly controlled conditions by high temperature steam activation, SGL is a high density carbon with large pore volume and moderately high surface area. Its pore structure has been carefully designed for the adsorption of both high and low molecular weight impurities from solutions.

Typical Applications: The advantages and economy of Type SGL systems have found wide acceptance in the chemical and food process industries for the decolorization and purification of numerous aqueous and organic liquids. Typical of these are the purification of glycols, soda ash and caustic liquors, sugar solutions, pharmaceuticals and plasticizers.

Economy of Column Operation: The use of highly active Calgon Granular Carbons in fixed or pulse bed systems provides the ultimate in counter-current efficiency and simplicity of operation. The columns eliminate the need for slurry tanks, filter presses, and multiple treatment which is necessary with powdered carbon. A properly designed system offers these benefits when compared to powdered carbon:

1. A clean, continuous operation.
2. Efficient utilization of the activated carbon — more impurities adsorbed per pound of carbon.
3. Less equipment — less floor space.
4. Lower carbon dosage — lower costs.
5. Improved product quality — better colors — higher purity.

PORE STRUCTURE

The pore structure of Type SGL Carbon is illustrated below, where cumulative pore volume is plotted against pore diameter. Correlation studies have shown that adsorption capacity is determined in part by total pore volume and pore size distribution. Color bodies and high molecular weight organic impurities require pores within the 20 to 500 Angstrom Unit range, while odors and low molecular weight impurities require pores smaller than 20 Angstrom Units. Type SGL Carbon has a high percentage of its total pore volume in both of these important ranges which contribute to its superior performance characteristics.

In addition, each granule of Type SGL is completely permeated by a system of large macropores which serve as avenues for the rapid diffusion of adsorbed material to the internal pore surfaces. This enhances both adsorption and reactivation characteristics.

PORE SIZE DISTRIBUTION
SGL

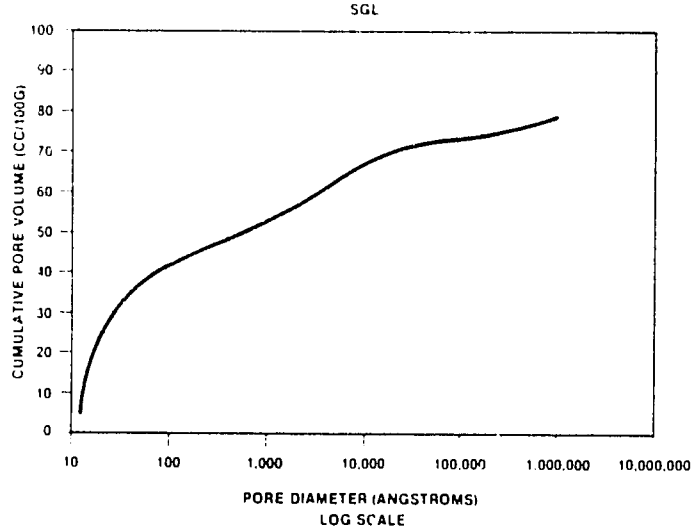

SPECIFICATIONS

Mesh Size, U.S. Sieve Series	8 x 30
Larger than 8 mesh, Maximum, %	15
Smaller than 30 mesh, Maximum, %	4
Mean Particle Diameter, mm	1.5-1.7
Iodine Number, Minimum	900
Molasses Number, Minimum	200
Moisture as packed, Maximum, %	2
Abrasion Number, Minimum	75
Ash, Maximum	10

PRESSURE DROP CHARACTERISTICS

Pressure drop per foot of bed depth for Type SGL Carbon can be read to the right for varying flow rates at different viscosity levels. These data were obtained in downflow column operation with a normal packing arrangement in which the carbon was pre-soaked in hot liquid and charged to the column as a slurry. The bulk density of the charged carbon was calculated to be approximately 27 lb/ft³.

REACTIVATION

In those applications where the volume of carbon in service is large, further savings can be realized through the reactivation of Type SGL for continued use in repeated cycles. Partial reactivation can sometimes be accomplished by chemical treatment without removing the carbon from the columns. In other cases, it is more satisfactory to use high temperature processing equipment such as the Herreshoff multiple-hearth furnace or direct-fired rotary kilns.

Typical Physical Properties

Total Surface Area (N_2, BET Method†), m^2/g	900-1000
Apparent Density (Bulk Density, dense packing), g/cc	.52
lb/ft³	32.5
Particle Density (Hg Displacement), g/cc	.80
Real Density (He Displacement), g/cc	2.1
Pore Volume (Within Particle), cc/g	0.85
Voids in Dense Packed Column, %	36
Specific Heat at 100°C	0.25

†Brunauer, Emmett and Teller: J. Am. Chem. Soc. 60, 309 (1938)

CAUTION

Wet activated carbon preferentially removes oxygen from air. In closed or partially closed containers and vessels, oxygen depletion may reach hazardous levels. If workers are to enter a vessel containing carbon, appropriate sampling and work procedures for potentially low-oxygen spaces should be followed, including all applicable Federal and State requirements.

For information regarding incidents involving human and environmental exposure, call (412) 787-6700 and ask for the Regulatory and Trade Affairs department.

NOMINAL PRESSURE DROP
LIQUID DOWNFLOW THROUGH SGL (8 x 30)

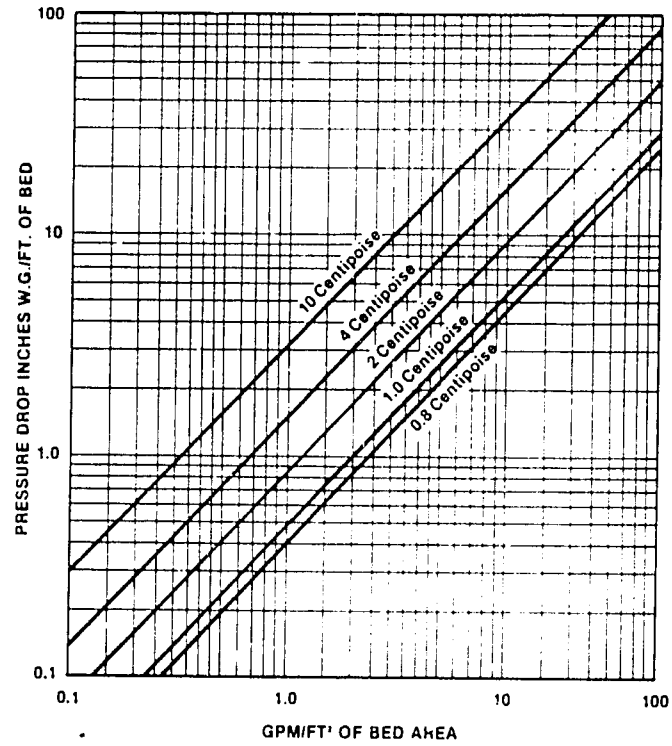

COMMERCIAL INFORMATION

Shipping Points: Pittsburgh, Pennsylvania; Catlettsburg, Kentucky.

Packaging: Type SGL Carbon is packed in four-ply kraft bags, 25 kg (55.1 lbs), net weight, 25.4 kg (56.1 lbs) gross weight. Also available; bulk super saks, 1000 lbs net, 1005 lbs gross weight; bulk boxes, 2000 lbs net, 2100 lbs gross weight; and bulk truckloads.

For additional information, contact the Calgon Carbon Corporation,
P.O. Box 717, Pittsburgh, PA 15230-0717
Phone: (412) 787-6700

CALGON

CALGON CARBON CORPORATION

Printed in U.S.A.

56

MODEL 3 DUAL MODULE ADSORBER

ACTIVATED CARBON PRODUCT BULLETIN

The Calgon Carbon Model 3 Dual Module Adsorber has been designed for removal of dissolved organic contaminants from water or wastewater utilizing granular activated carbon adsorption. It is particularly suitable for applications with low levels of organic contamination or with flow rates up to 130 gallons per minute.

The Model 3 Adsorber can be combined with the Calgon Carbon Bulk-Back Service in which the granular activated carbon can be supplied in 72 cu.ft. containers for convenient transfer to the adsorber. The Bulk-Back units will also receive the spent carbon from the adsorbers for return to Calgon Carbon Corporation or for safe transportation to a disposal site.

Your Calgon Carbon representative can help you evaluate the suitability of the Model 3 Adsorber and Bulk-Back Service for satisfying your requirements. If required, adsorption evaluation tests or studies to determine applicability and economics can be arranged. Calgon Carbon offers adsorption equipment in many other sizes, and carbon supply and exchange services to meet your particular needs.

features

- Proven design—downflow fixed bed adsorption.
- Pre-engineered package—simple and quick installation.
- Adsorption vessels are ASME coded.
- Ideal for carbon usage up to 50,000 lbs. per year.
- Epoxy vessel lining suitable for potable water (EPA/USDA approved).
- Corrosion resistant piping and valves.
- Header distributor underdrain for even distribution.
- Manway for maintenance access.
- Backwash capability can be added if suspended solids are present.
- Designed to minimize operating labor and avoid manual handling of carbon
- Capable of bulk carbon filling and removal.
- Granular activated carbon fill and discharge piping.

available auxiliary services

- Calgon Carbon Bulk-Back Service
  (ask for Calgon Carbon's Bulletin 27-68)

optional operation modes

- Downflow fixed bed or
  Downflow fixed bed with backwash capability.
- Series or Parallel flow.

specifications

Vessel Diameter:	4 ft.
ASME Code:	Design 75 PSIG @ 150°F
Pipe Connections:	Process pipe: 2-inch flange Water pipe: 1½- inch flange
Carbon Volume per Vessel:	72 cu. ft. (nominal 2,000 lbs--granular activated carbon)
Weight:	Empty—11,400 lbs.; Operating—30,000 lbs.
Pressure Relief:	72 PSIG nominal setting
Backwash Rate:	175 GPM (if required)
Transfer Mode:	Water pressurized (15-30 psig) slurry transfer

Calgon Carbon Corporation reserves the right to change specifications without notice for components of equal quality

typical flow rates (72 cu. ft. of granular activated carbon)

Series Operation		Parallel Operation	
GPM	*Contact Time Minutes*	*GPM*	*Contact Time Minutes*
65	15	130	7.5

**Note: Larger Calgon Carbon Service Systems are available for higher flow rates and greater contact time applications.*

materials of construction and available options

- Vessel Lining: Epoxy coating (nominal 12 mil) suitable for potable water application.
  - Optional Vinyl ester coating (nominal 40 mil) for more severe, non-potable water applications
- Piping and Valves: solid PVC piping and PVC ball valves.
  - Optional flanged polypropylene lined piping with diaphram valves (process) and polypropylene lined plug valves (carbon transfer).
  - Optional threaded carbon steel piping with ductile iron ball valves (process and carbon transfer).
- Underdrain Collection System: solid PVC piping and polypropylene screened nozzles.
  - Optional solid polypropylene piping and screened nozzles.
- External Coating: Alkyd exterior paint.
  - Optional epoxy coating system for more corrosive environments.

caution

Wet activated carbon preferentially removes oxygen from the air. In closed or partially closed containers and vessels, oxygen depletion may reach hazardous levels. If workers are to enter a vessel containing carbon, appropriate sampling and work procedures for potentially low-oxygen spaces should be followed, including all applicable Federal and State requirements.

dimensional schematic

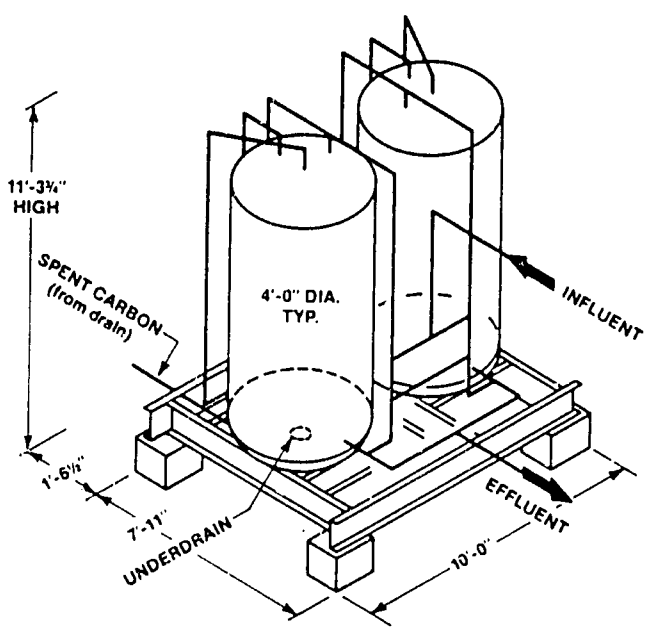

(NOMINAL DIMENSIONS)

For information regarding human and environmental exposure, call (412) 787-6700 and request to speak to Regulatory and Trade Affairs.

For additional information, contact the Calgon Carbon Corporation Box 717, Pittsburgh, PA 15230-0717 Phone: (412) 787-6700

CALGON

CALGON CARBON CORPORATION

Printed in U.S.A.

CALGON CARBON CLEANAMINE SYSTEM

The Calgon Carbon CleanAmine System is a pre-assembled, skid-mounted carbon adsorption system designed and engineered by Calgon Carbon Corporation to purify recirculating amine streams. It is available in three models which can process a wide range of amine flow rates.

The CleanAmine System is designed to remove particulate and dissolved organic contaminants from the amine solution. The recommended location for treatment is on the cold lean stream.

Typically, a 10-20% slipstream is taken from the recirculating stream for treatment; however, some amine users may prefer full stream treatment.

Untreated amine solution enters a pre-adsorption mechanical filter where suspended solids are removed. The filtered solution then enters the top of the adsorber and flows downflow through the carbon bed where dissolved organics are removed. The amine solution then passes through another mechanical filter to remove any solids which may have passed through the adsorber. The treated amine solution is then returned to the recirculating stream.

Virgin carbon is delivered to the customer in 2000 pound bulk-back bins. The carbon is transferred via an eductor from the bins to the adsorber. When spent, the carbon is transferred as a slurry to empty bulk-back bins using plant air as the motive force.

SYSTEM COMPONENTS

- ASME Code Carbon Steel Adsorber w/stress relief.
  Design Pressure — 150 psig or 300 psig.
  Design Temperature — 300°F.
  Carbon steel collection header with standard Vee-Wire nozzles from Johnson Screens.
- Two-cartridge-type mechanical filters (pre-and post-adsorption).
- Complete carbon transfer system, with stainless steel eductor, to facilitate carbon change-outs between 2,000 pound bulk bin and adsorber.
- Pressure relief (rupture discs) on filters and adsorber.
- Steam connection on amine outlet line for periodic steaming of carbon bed, if desired.
- In-line sample taps for sampling amine solution before pre-filter and after post-filter.
- Pressure gauges to monitor pressure drop across mechanical filters and carbon adsorber.

Purchase price includes initial carbon fill, plus one replacement charge.

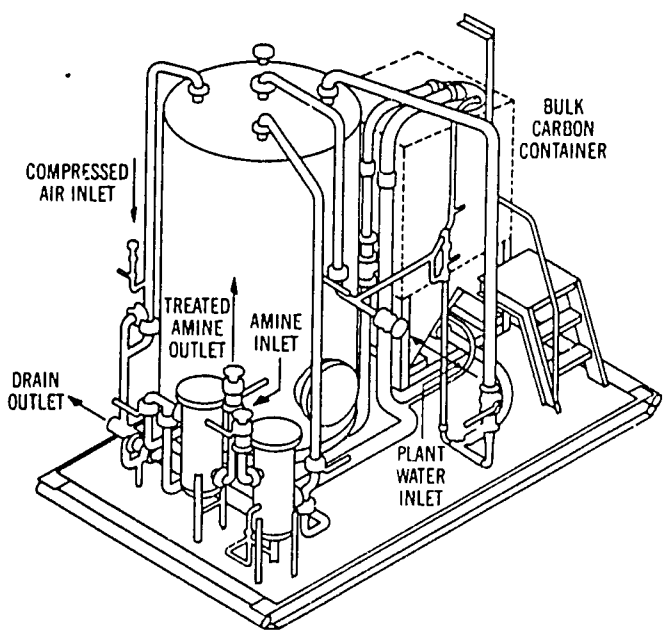

Model Number	Flow Rate Range (GPM)	DIMENSIONS				
		Skid		Adsorber		System Overall Height
		Width	Length	Diameter	Straight Side	
CA 2000	15-40	8'0"	11'0"	3'6"	7'8"	11'5"
CA 4000	40-75	8'0"	13'9"	5'0"	7'8"	11'5"
CA 8000	75-150	8'0"	15'6"	7'0"	7'8"	11'10"

Model Number	Pressure Drop Through System (PSI)		Carbon Charge (Lbs.)	Approximate Bed Depth	Approximate Operating Weight (Lbs.)	Approximate Shipping Weight (Lbs.)
	Low Flow	High Flow				
CA 2000	1	4	2000	7'8"	13,500	5,400
CA 4000	3	8	4000	7'8"	22,000	7,800
CA 8000	2	7	8000	7'8"	41,000	11,800

CALGON CARBON BULK BINS

Calgon Carbon supplies "CleanAmine" granular activated carbon for the CleanAmine System in bulk containers, 2,000-pounds net weight, for easy loading of the adsorber. Spent carbon is transferred from the adsorber into an empty bulk container so that it can be returned to Calgon Carbon for disposal.

CAUTION

Wet activated carbon preferentially removes oxygen from air. In closed or partially closed containers and vessels, oxygen depletion may reach hazardous levels. If workers are to enter a vessel containing carbon, appropriate sampling and work procedures for potentially low-oxygen spaces should be followed, including all applicable Federal and State requirements.

Information concerning human and environmental exposure may be reviewed on the Material Safety Data Sheet and label for this product.

For additional information regarding incidents involving human and environmental exposure, call (412) 787-6700 and ask for the Regulatory and Trade Affairs Department.

For additional information, contact Calgon Carbon Corporation, Box 717, Pittsburgh, PA 15230-0717 Phone: (412) 787-6700

CALGON

CALGON CARBON CORPORATION

Printed in U.S.A.

Appendix C
Production and Materials/Energy Use

The production and consumption data in Table C-1 was provided by the plant.

What is known is:

- Quantity produced of finished soda ash, caustic soda, and sodium bicarbonate.
- Quantity used of limestone, coke, salt, ammonia, and fuel oil.

The quantity of intermediate crude soda ash made is not known. Neither is the amount of steam produced. However, there are design and/or factory standards (factors) for the unit production or consumption of each. These are listed under the heading "Standard".

The standards are not theoretical values; they are actual estimates of typical practices which have a margin allowing for greater than theoretical usage of materials.

Steam consumption, not being measured, can only be converted to equivalent fuel oil consumption applying a factor (0.1) to convert to a fuel allowance. Note should be taken that 0.1 is a considerably larger factor than boiler design.

Table C-2 converts the energy related elements on Table C-1 to total consumption of energy (both in Kcal and in KJoule) per ton of crude soda ash.

A recently reported industry figure for soda ash from the Solvay process is 18.4 GJoule per ton.

---

(1) Austin, G. T., Shreve's Chemical Process Industries, 5th Edition, McGraw Hill Book Company.

TABLE C-1

SOLVAY PROCESS PLANT: PRODUCTION/CONSUMPTION STATISTICS

File: MISRSA02 03 Feb 1988

			DESIGN	YEAR 83/84	YEAR 84/85	YEAR 85/86	YEAR 86/87
NET PRODUCTION							
Soda Ash	Tons		35000	48471	49115	46000	48700
Caustic Soda			42000	21558	16450	21081	21650
Sodium Bicarbonate			2000	4478	2568	3793	5578
GROSS PRODUCTION		Standard					
1.0 Crude Soda Ash	From:						
Soda Ash	Estimated Tons	1.0000	35000	48471	49115	46000	48700
Caustic Soda		1.5000	63000	32337	24675	31621	31575
Sodium Bicarbonate		0.7000	1400	3134	1797	2655	3904
Total	Estimated Tons		99400	83942	75587	80276	84179
CONSUMPTION							
2.0 Limestone	To:	Standard					
Crude Soda Ash	Standard Tons	1.3000	129220	109125	98263	104359	109433
Caustic Soda		2.0000	84000	43116	32900	42162	42100
Total	Standard Tons		213220	152241	131163	146521	151533
Actual Consumption	Tons			244880	257311	264177	262509
2.0 Limestone	Percent of Std.			160	196	180	173
3.0 Coke	To:	Standard					
Crude Soda Ash	Standard Tons	0.1100	10934	9233	8314	8830	9259
Caustic Soda		0.2000	8400	4311	3290	4216	4210
Total	Standard Tons		19334	13545	11604	13046	13469
Actual Consumption	Tons			21424	19870	21354	22516
3.0 Coke	Percent of Std.			158	171	163	167
3.1 Coke Dose (x10)	Kg/Ton Limestone			874	772	808	857
4.0 Salt	To:	Standard					
Crude Soda Ash	Standard Tons	1.8000	178920	151096	136057	144497	151523
Actual Consumption	Tons			192882	194862	193917	202738
4.0 Salt	Percent of Std.			127	143	134	133
5.0 Ammonia	To:	Standard					
Crude Soda Ash	Standard Tons	0.0100	994	839	755	802	841
Actual Consumption	Tons			1128	1202	1147	1059
5.0 Ammonia	Percent of Std.			134	159	142	125
6.0 Steam	To (Tons):	Standard					
Crude Soda Ash	exclude calcining	2.1700	215698	182155	164025	174200	182669
Refined Soda Ash	calcining only	1.2200	42700	59134	59920	56120	59414
Caustic Soda	include calcining	3.1500	132300	67907	51817	66405	66307
Sodium Bicarbonate	include calcining	1.0000	2000	4478	2568	3793	5578
Total	Standard Tons		392698	313675	278330	300518	313969
7.0 Fuel Oil (Mazot)	Std: Ton/Ton Steam	0.1000	39269	31367	27833	30051	31396
Actual Consumption	Tons			60617	59138	58256	61073
7.0 Fuel Oil (Mazot)	Percent of Std.			193	212	193	194
8.0 Electric Power	Kwh (x1000)			32133	31989	26547	25014

TABLE C-2
OVERALL ENERGY CONSUMPTION

File: MISRSA03 04 Feb 88

			DESIGN	YEAR 83/84	YEAR 84/85	YEAR 85/86	YEAR 86/87
NET PRODUCTION							
Soda Ash	Tons		35000	48471	49115	46000	48700
Caustic Soda			42000	21558	16450	21081	21050
Sodium Bicarbonate			2000	4478	2568	3793	5578
GROSS PRODUCTION							
1.0 Crude Soda Ash	Estimated Tons		99400	83942	75587	80276	84179
ENERGY CONSUMED							
3.0 Coke	Tons		19334	21424	19870	21354	22516
7.0 Fuel Oil (Mazot)	Tons		39269	60617	59138	58256	61073
8.0 Electric Power	Kwh (x1000)		32000	32133	31989	26547	25014
SPECIFIC CONSUMPTION	Kcal (x1000)/Ton						
3.0 Coke	Kcal/kg	7000.00	1361	1786	1840	1862	1872
7.0 Fuel Oil (Mazot)	Kcal/kg	9600.00	3792	6932	7510	6366	6964
8.0 Electric Power	Kcal/Kwh	860.14	276	329	364	284	255
Total	Kcal (x1000)/Ton		5431	9048	9715	9113	9092
	KJoule (x1000)/Ton	4.19	22756	37912	40705	38184	38099
Industry Standard	KJoule (x1000)/Ton		18400				

62

Appendix D
Lime Kilns: Heat and Material Balances

Parametric analyses of the heat and material balance of the lime kiln have been made at five levels:

1. At fixed coke dose, the effect of varying convective and radiative losses between 10% and 30%.

2. The effect of change in CaO content of lime production, from 65% to 85% (at fixed radiative and convective loss: 25%).

3. The effect of change in moisture content of limestone, from 2% to 10% (at fixed radiative and convective loss: 25%).

4. The effect of change in temperature of lime extract from 75° to 175°C (at fixed radiative and convective loss: 25%).

5. The effect of change in temperature of lime extract from 125°C to 225°C (at fixed radiative and convective loss: 25%).

The conversion factors used in these studies are listed below (Table D-0). The results follow in Tables D-1 through D-5. Calculations are in Appendix G.

Table D-0
Factors Used in Heat and Material Balances
(Refer to Tables D-1 through D-5)

Heat of calcining (Kcal/ton)	$CaCO_3$	429000
	$MgCO_3$	289000
Heat of vaporiz. (Kcal/kg) Moisture		556
Heat capacity (Kcal/kg-°C)	Extract	.217
	Coke	.265
	Air and CO_2	.237

EXEC C:TREPORT3
Exec ver 3.0

TABLE D-1
LIME KILN HEAT BALANCE
SENSITIVITY ANALYSIS
EFFECT OF RADIATION AND CONVECTION LOSS

		CASE 1	CASE 2	CASE 3	CASE 4	CASE 5
INPUT DATA						
HEAT LOSS TO RADIATION AND CONVECTION (% OF HEAT RELEASED)		10.00	15.00	20.00	25.00	30.00
COKE DOSE (Kg Coke/Ton Limestone)		85.7	85.7	85.7	85.7	85.7
Moisture, %: Limestone		4.18	4.18	4.18	4.18	4.18
Coke		1.19	1.19	1.19	1.19	1.19
Analysis. Lime, %: Insoluble Matter		0.61	0.61	0.61	0.61	0.61
R2O3		0.66	0.66	0.66	0.66	0.66
Calcium Oxide		65.66	65.66	65.66	65.66	65.66
Calcium Carbonate		29.12	29.12	29.12	29.12	29.12
Magnesium Oxide		1.19	1.19	1.19	1.19	1.19
SO4		1.57	1.57	1.57	1.57	1.57
Moisture		1.19	1.19	1.19	1.19	1.19
Coke, % (Dry Basis): Ash		10.59	10.59	10.59	10.59	10.59
Volatile Matter		1.36	1.36	1.36	1.36	1.36
Fixed Carbon		87.03	87.03	87.03	87.03	87.03
Calorific Value. Coke, Kcal/Kg (Dry Basis)		6939.24	6939.24	6939.24	6939.24	6939.24
Temperature. Kiln Extract, degrees c.		100	100	100	100	100
Kiln Gas,		150	150	150	150	150
Limestone and Coke		14	14	14	14	14
Air		14	14	14	14	14
HEAT AND MATERIAL BALANCE (BASED ON INPUT DATA)						
TOTAL HEAT RELEASED IN KILN (Kcal)		435516	462680	493458	528623	569185
EFFICIENCY(1): Heat of calcining/Total Heat Released	%	73.99	69.65	65.30	60.96	56.61
EFFICIENCY(2): Heat of calcining/Calorific Value of Dose	%	55.58	55.58	55.58	55.58	55.58
ESTIMATED COKE IN EXTRACT: Kg (Dry basis)		20.7	16.8	12.4	7.3	1.5
COKE IN EXTRACT: Percent of Coke Dose	%	24.88	20.19	14.88	8.82	1.82
CARBON DIOXIDE IN KILN GAS:	%	40.96	40.07	39.15	38.20	37.22
CONVERSION OF AVAILABLE CALCIUM CARBONATE	%	80.10	80.10	80.10	80.10	80.10
Heat Consumption, Kcal: Calcining, Calcium Carbonate		317718	317718	317718	317718	317718
Magnesium Carbonate		4544	4544	4544	4544	4544
Drying, Limestone and Coke		24436	24436	24436	24436	24436
Sensible Heat, Extract (Lime)		11579	11579	11579	11579	11579
Extract (Coke)		470	382	281	166	34
Kiln Gas (Calcining)		10728	10728	10728	10728	10728
Kiln gas (Combustion)		22486	23888	25477	27293	29387
Convective and Radiative Losses		43551	69402	98691	132155	170755
Extracted Lime, Kg		624.1	624.1	624.1	624.1	624.1
Coke, Kg		20.7	16.8	12.4	7.3	1.5
Limestone Analysis, %: Insoluble Matter		0.38	0.38	0.38	0.38	0.38
R2O3		0.41	0.41	0.41	0.41	0.41
Calcium carbonate		92.45	92.45	92.45	92.45	92.45
Magnesium carbonate		1.57	1.57	1.57	1.57	1.57
SO4		0.99	0.99	0.99	0.99	0.99
Moisture		4.18	4.18	4.18	4.18	4.18
Kiln Gas, Kg Moles: Carbon Dioxide (From Calcining)		7.592	7.592	7.592	7.592	7.592
Carbon Dioxide (From Combustion)		4.668	4.960	5.290	5.667	6.101
Inert Gas (Nitrogen From Combustion)		17.670	18.772	20.021	21.448	23.094

Program termination

EXEC C:REPORT4A
Exec ver 3.0

TABLE D-2
LIME KILN HEAT BALANCE
SENSITIVITY ANALYSIS (AT 25% HEAT LOSS)
EFFECT OF CALCIUM CARBONATE CONVERSION (CaO IN LIME)

	CASE 1	CASE 2	CASE 3	CASE 4	CASE 5
INPUT DATA					
HEAT LOSS TO RADIATION AND CONVECTION (% OF HEAT RELEASED)	25.00	25.00	25.00	25.00	25.00
Moisture, %: Limestone	4.18	4.18	4.18	4.18	4.18
Coke	1.19	1.19	1.19	1.19	1.19
Analysis. Lime, %: Insoluble Matter	0.61	0.61	0.61	0.61	0.61
R2O3	0.66	0.66	0.66	0.66	0.66
CALCIUM OXIDE	65.00	70.00	75.00	80.00	85.00
Calcium Carbonate	29.78	24.78	19.78	14.78	9.78
Magnesium Oxide	1.19	1.19	1.19	1.19	1.19
SO4	1.57	1.57	1.57	1.57	1.57
Moisture	1.19	1.19	1.19	1.19	1.19
Coke, % (Dry Basis): Ash	10.59	10.59	10.59	10.59	10.59
Volatile Matter	1.36	1.36	1.36	1.36	1.36
Fixed Carbon	87.03	87.03	87.03	87.03	87.03
Calorific Value. Coke, Kcal/Kg (Dry Basis)	6939.24	6939.24	6939.24	6939.24	6939.24
Temperature. Kiln Extract, degrees c.	100	100	100	100	100
Kiln Gas,	150	150	150	150	150
Limestone and Coke	14	14	14	14	14
Air	14	14	14	14	14
HEAT AND MATERIAL BALANCE (BASED ON INPUT DATA)					
COKE DOSE (Kg Coke/Ton Limestone)	77.6	80.9	84.1	87.1	90.0
TOTAL HEAT RELEASED IN KILN (Kcal)	525176	547822	569349	589838	609362
EFFICIENCY(1): Heat of calcining/Total Heat Released %	60.96	61.28	61.56	61.80	62.02
EFFICIENCY(2): Heat of calcining/Calorific Value of Dose %	60.96	61.28	61.56	61.80	62.02
ESTIMATED COKE IN EXTRACT: Kg (Dry basis)	0.0	0.0	0.0	0.0	-0.0
COKE IN EXTRACT: Percent of Coke Dose %	0.00	0.00	0.00	0.00	-0.00
CARBON DIOXIDE IN KILN GAS: %	38.20	38.26	38.31	38.36	38.40
CONVERSION OF AVAILABLE CALCIUM CARBONATE %	79.58	83.45	87.13	90.62	93.94
Heat Consumption, Kcal: Calcining, Calcium Carbonate	315603	331272	346167	360344	373853
Magnesium Carbonate	4559	4444	4334	4229	4130
Drying, Limestone and Coke	24324	24370	24415	24457	24497
Sensible Heat, Extract (Lime)	11619	11325	11045	10779	10525
Extract (Coke)	0	0	0	0	-0
Kiln Gas (Calcining)	10659	11168	11653	12113	12553
Kiln gas (Combustion)	27115	28284	29396	30454	31462
Convective and Radiative Losses	131294	136955	142337	147459	152340
Extracted Lime, Kg	626.2	610.4	595.3	580.9	567.3
Coke, Kg	0.0	0.0	0.0	0.0	-0.0
Limestone Analysis, %: Insoluble Matter	0.38	0.37	0.36	0.35	0.35
R2O3	0.41	0.40	0.39	0.38	0.37
Calcium carbonate	92.44	92.52	92.60	92.68	92.76
Magnesium carbonate	1.57	1.53	1.49	1.46	1.42
SO4	0.99	0.96	0.94	0.92	0.90
Moisture	4.18	4.18	4.18	4.18	4.18
Kiln Gas, Kg Moles: Carbon Dioxide (From Calcining)	7.543	7.904	8.247	8.573	8.884
Carbon Dioxide (From Combustion)	5.630	5.872	6.103	6.323	6.532
Inert Gas (Nitrogen From Combustion)	21.308	22.227	23.100	23.931	24.724

Program termination

exec c:report4b
Exec ver 3.0

TABLE D-3
LIME KILN HEAT BALANCE
SENSITIVITY ANALYSIS (AT 25% HEAT LOSS)
EFFECT OF MOISTURE CONTENT IN LIMESTONE

		CASE 1	CASE 2	CASE 3	CASE 4	CASE 5
INPUT DATA						
HEAT LOSS TO RADIATION AND CONVECTION (% OF HEAT RELEASED)		25.00	25.00	25.00	25.00	25.00
Moisture, %: Limestone		2.00	4.00	6.00	8.00	10.00
Coke		1.19	1.19	1.19	1.19	1.19
Analysis. Lime, %: Insoluble Matter		0.61	0.61	0.61	0.61	0.61
R2O3		0.66	0.66	0.66	0.66	0.66
Calcium Oxide		65.66	65.66	65.66	65.66	65.66
Calcium Carbonate		29.12	29.12	29.12	29.12	29.12
Magnesium Oxide		1.19	1.19	1.19	1.19	1.19
SO4		1.57	1.57	1.57	1.57	1.57
MOISTURE		1.19	1.19	1.19	1.19	1.19
Coke, % (Dry Basis): Ash		10.59	10.59	10.59	10.59	10.59
Volatile Matter		1.36	1.36	1.36	1.36	1.36
Fixed Carbon		87.03	87.03	87.03	87.03	87.03
Calorific Value. Coke, Kcal/Kg (Dry Basis)		6939.24	6939.24	6939.24	6939.24	6939.24
Temperature. Kiln Extract, degrees c.		100	100	100	100	100
Kiln Gas,		150	150	150	150	150
Limestone and Coke		14	14	14	14	14
Air		14	14	14	14	14
HEAT AND MATERIAL BALANCE (BASED ON INPUT DATA)						
COKE DOSE (Kg Coke/Ton Limestone)		77.1	78.0	78.8	79.6	80.5
TOTAL HEAT RELEASED IN KILN (Kcal)		522083	527724	533366	539007	544648
EFFICIENCY(1): Heat of calcining/Total Heat Released	%	63.13	61.18	59.27	57.40	55.57
EFFICIENCY(2): Heat of calcining/Calorific Value of Dose	%	63.13	61.18	59.27	57.40	55.57
ESTIMATED COKE IN EXTRACT: Kg (Dry basis)		0.0	-0.0	-0.0	-0.0	-0.0
COKE IN EXTRACT: Percent of Coke Dose	%	0.00	-0.00	-0.00	-0.00	-0.00
CARBON DIOXIDE IN KILN GAS:	%	38.68	38.25	37.82	37.40	36.98
CONVERSION OF AVAILABLE CALCIUM CARBONATE	%	80.10	80.10	80.10	80.10	80.10
Heat Consumption, Kcal: Calcining, Calcium Carbonate		324947	318315	311684	305052	298420
Magnesium Carbonate		4647	4552	4457	4362	4268
Drying, Limestone and Coke		12197	23328	34460	45591	56723
Sensible Heat, Extract (Lime)		11843	11601	11359	11118	10876
Extract (Coke)		0	-0	-0	-0	-0
Kiln Gas (Calcining)		10972	10748	10524	10300	10076
Kiln gas (Combustion)		26955	27247	27538	27829	28120
Convective and Radiative Losses		130520	131931	133341	134751	136162
Extracted Lime, Kg		638.3	625.3	612.2	599.2	586.2
Coke, Kg		0.0	-0.0	-0.0	-0.0	-0.0
Limestone Analysis, %: Insoluble Matter		0.39	0.38	0.37	0.36	0.35
R2O3		0.42	0.41	0.40	0.40	0.39
Calcium carbonate		94.55	92.62	90.69	88.75	86.83
Magnesium carbonate		1.60	1.57	1.54	1.50	1.47
SO4		1.01	0.99	0.97	0.95	0.93
Moisture		2.00	4.00	6.00	8.00	10.00
Kiln Gas, Kg Moles: Carbon Dioxide (From Calcining)		7.765	7.606	7.448	7.289	7.131
Carbon Dioxide (From Combustion)		5.597	5.657	5.717	5.778	5.838
Inert Gas (Nitrogen From Combustion)		21.182	21.411	21.640	21.869	22.098

Program termination

67

#exec c:report4c
Exec Ver 3.0

TABLE D-4
LIME KILN HEAT BALANCE
SENSITIVITY ANALYSIS (AT 25% HEAT LOSS)
EFFECT OF TEMPERATURE OF LIME EXTRACT

		CASE 1	CASE 2	CASE 3	CASE 4	CASE 5
INPUT DATA						
HEAT LOSS TO RADIATION AND CONVECTION (% OF HEAT RELEASED)		25.00	25.00	25.00	25.00	25.00
Moisture, %: Limestone		4.18	4.18	4.18	4.18	4.18
Coke		1.19	1.19	1.19	1.19	1.19
Analysis. Lime, %: Insoluble Matter		0.61	0.61	0.61	0.61	0.61
R2O3		0.66	0.66	0.66	0.66	0.66
Calcium Oxide		65.66	65.66	65.66	65.66	65.66
Calcium Carbonate		29.12	29.12	29.12	29.12	29.12
Magnesium Oxide		1.19	1.19	1.19	1.19	1.19
SO4		1.57	1.57	1.57	1.57	1.57
Moisture		1.19	1.19	1.19	1.19	1.19
Coke, % (Dry Basis): Ash		10.59	10.59	10.59	10.59	10.59
Volatile Matter		1.36	1.36	1.36	1.36	1.36
Fixed Carbon		87.03	87.03	87.03	87.03	87.03
Calorific Value. Coke, Kcal/Kg (Dry Basis)		6939.24	6939.24	6939.24	6939.24	6939.24
Temperature. KILN EXTRACT, degrees c.		75	100	125	150	175
Kiln Gas,		150	150	150	150	150
Limestone and Coke		14	14	14	14	14
Air		14	14	14	14	14
HEAT AND MATERIAL BALANCE (BASED ON INPUT DATA)						
COKE DOSE (Kg Coke/Ton Limestone)		77.3	78.0	78.8	79.5	80.2
TOTAL HEAT RELEASED IN KILN (Kcal)		523370	528232	533095	537957	542820
EFFICIENCY(1): Heat of calcining/Total Heat Released	%	61.57	61.00	60.45	59.90	59.36
EFFICIENCY(2): Heat of calcining/Calorific Value of Dose	%	61.57	61.00	60.45	59.90	59.36
ESTIMATED COKE IN EXTRACT: Kg (Dry basis)		0.0	-0.0	-0.0	-0.0	-0.0
COKE IN EXTRACT: Percent of Coke Dose	%	0.00	-0.00	-0.00	-0.00	-0.00
CARBON DIOXIDE IN KILN GAS:	%	38.33	38.21	38.08	37.96	37.84
CONVERSION OF AVAILABLE CALCIUM CARBONATE	%	80.10	80.10	80.10	80.10	80.10
Heat Consumption, Kcal: Calcining, Calcium Carbonate		317718	317718	317718	317718	317718
Magnesium Carbonate		4544	4544	4544	4544	4544
Drying, Limestone and Coke		24320	24330	24340	24350	24360
Sensible Heat, Extract (Lime)		8193	11579	14965	18351	21737
Extract (Coke)		0	-0	-0	-0	-0
Kiln Gas (Calcining)		10728	10728	10728	10728	10728
Kiln gas (Combustion)		27022	27273	27524	27775	28026
Convective and Radiative Losses		130842	132058	133273	134489	135705
Extracted Lime, Kg		624.1	624.1	624.1	624.1	624.1
Coke, Kg		0.0	-0.0	-0.0	-0.0	-0.0
Limestone Analysis, %: Insoluble Matter		0.38	0.38	0.38	0.38	0.38
R2O3		0.41	0.41	0.41	0.41	0.41
Calcium carbonate		92.45	92.45	92.45	92.45	92.45
Magnesium carbonate		1.57	1.57	1.57	1.57	1.57
SO4		0.99	0.99	0.99	0.99	0.99
Moisture		4.18	4.18	4.18	4.18	4.18
Kiln Gas, Kg Moles: Carbon Dioxide (From Calcining)		7.592	7.592	7.592	7.592	7.592
Carbon Dioxide (From Combustion)		5.610	5.662	5.715	5.767	5.819
Inert Gas (Nitrogen From Combustion)		21.235	21.432	21.629	21.827	22.024

Program termination

68

exec c:report4d
Exec Ver 3.0

TABLE D-5
LIME KILN HEAT BALANCE
SENSITIVITY ANALYSIS (AT 25% HEAT LOSS)
EFFECT OF TEMPERATURE OF KILN GAS

INPUT DATA	CASE 1	CASE 2	CASE 3	CASE 4	CASE 5
HEAT LOSS TO RADIATION AND CONVECTION (% OF HEAT RELEASED)	25.00	25.00	25.00	25.00	25.00
Moisture, %: Limestone	4.18	4.18	4.18	4.18	4.18
Coke	1.19	1.19	1.19	1.19	1.19
Analysis. Lime, %: Insoluble Matter	0.61	0.61	0.61	0.61	0.61
R2O3	0.66	0.66	0.66	0.66	0.66
Calcium Oxide	65.66	65.66	65.66	65.66	65.66
Calcium Carbonate	29.12	29.12	29.12	29.12	29.12
Magnesium Oxide	1.19	1.19	1.19	1.19	1.19
SO4	1.57	1.57	1.57	1.57	1.57
Moisture	1.19	1.19	1.19	1.19	1.19
Coke, % (Dry Basis): Ash	10.59	10.59	10.59	10.59	10.59
Volatile Matter	1.36	1.36	1.36	1.36	1.36
Fixed Carbon	87.03	87.03	87.03	87.03	87.03
Calorific Value. Coke, Kcal/Kg (Dry Basis)	6939.24	6939.24	6939.24	6939.24	6939.24
Temperature. Kiln Extract, degrees c.	100	100	100	100	100
KILN GAS,	125	150	175	200	225
Limestone and Coke	14	14	14	14	14
Air	14	14	14	14	14
HEAT AND MATERIAL BALANCE (BASED ON INPUT DATA)					
COKE DOSE (Kg Coke/Ton Limestone)	76.6	78.0	79.5	81.1	82.7
TOTAL HEAT RELEASED IN KILN (Kcal)	518299	528232	538441	548337	559733
EFFICIENCY(1): Heat of calcining/Total Heat Released %	62.17	61.00	59.85	58.70	57.57
EFFICIENCY(2): Heat of calcining/Calorific Value of Dose %	62.17	61.00	59.85	58.70	57.57
ESTIMATED COKE IN EXTRACT: Kg (Dry basis)	0.0	-0.0	-0.0	-0.0	-0.0
COKE IN EXTRACT: Percent of Coke Dose %	0.00	-0.00	-0.00	-0.00	-0.00
CARBON DIOXIDE IN KILN GAS: %	38.47	38.21	37.95	37.69	37.44
CONVERSION OF AVAILABLE CALCIUM CARBONATE %	80.10	80.10	80.10	80.10	80.10
Heat Consumption, Kcal: Calcining, Calcium Carbonate	317718	317718	317718	317718	317718
Magnesium Carbonate	4544	4544	4544	4544	4544
Drying, Limestone and Coke	24309	24330	24351	24373	24395
Sensible Heat, Extract (Lime)	11579	11579	11579	11579	11579
Extract (Coke)	0	-0	-0	-0	-0
Kiln Gas (Calcining)	8748	10728	12707	14686	16666
Kiln gas (Combustion)	21823	27273	32929	38800	44895
Convective and Radiative Losses	129574	132058	134610	137234	139933
Extracted Lime, Kg	624.1	624.1	624.1	624.1	624.1
Coke, Kg	0.0	-0.0	-0.0	-0.0	-0.0
Limestone Analysis, %: Insoluble Matter	0.38	0.38	0.38	0.38	0.38
R2O3	0.41	0.41	0.41	0.41	0.41
Calcium carbonate	32.45	32.45	32.45	32.45	32.45
Magnesium carbonate	1.57	1.57	1.57	1.57	1.57
SO4	0.99	0.99	0.99	0.99	0.99
Moisture	4.18	4.18	4.18	4.18	4.18
Kiln Gas, Kg Moles: Carbon Dioxide (From Calcining)	7.592	7.592	7.592	7.592	7.592
Carbon Dioxide (From Combustion)	5.556	5.662	5.772	5.884	5.999
Inert Gas (Nitrogen From Combustion)	21.029	21.432	21.846	22.272	22.710

Program termination

69

Appendix E
Steam Plant Efficiency Estimates

MISR CHEMICAL STEAM DIAGRAM

FIGURE E-1
MISR CHEMICALS CO
ENERGY SURVEY

BLOCK FLOW DIAGRAM
STEAM AND POWER GENERATION

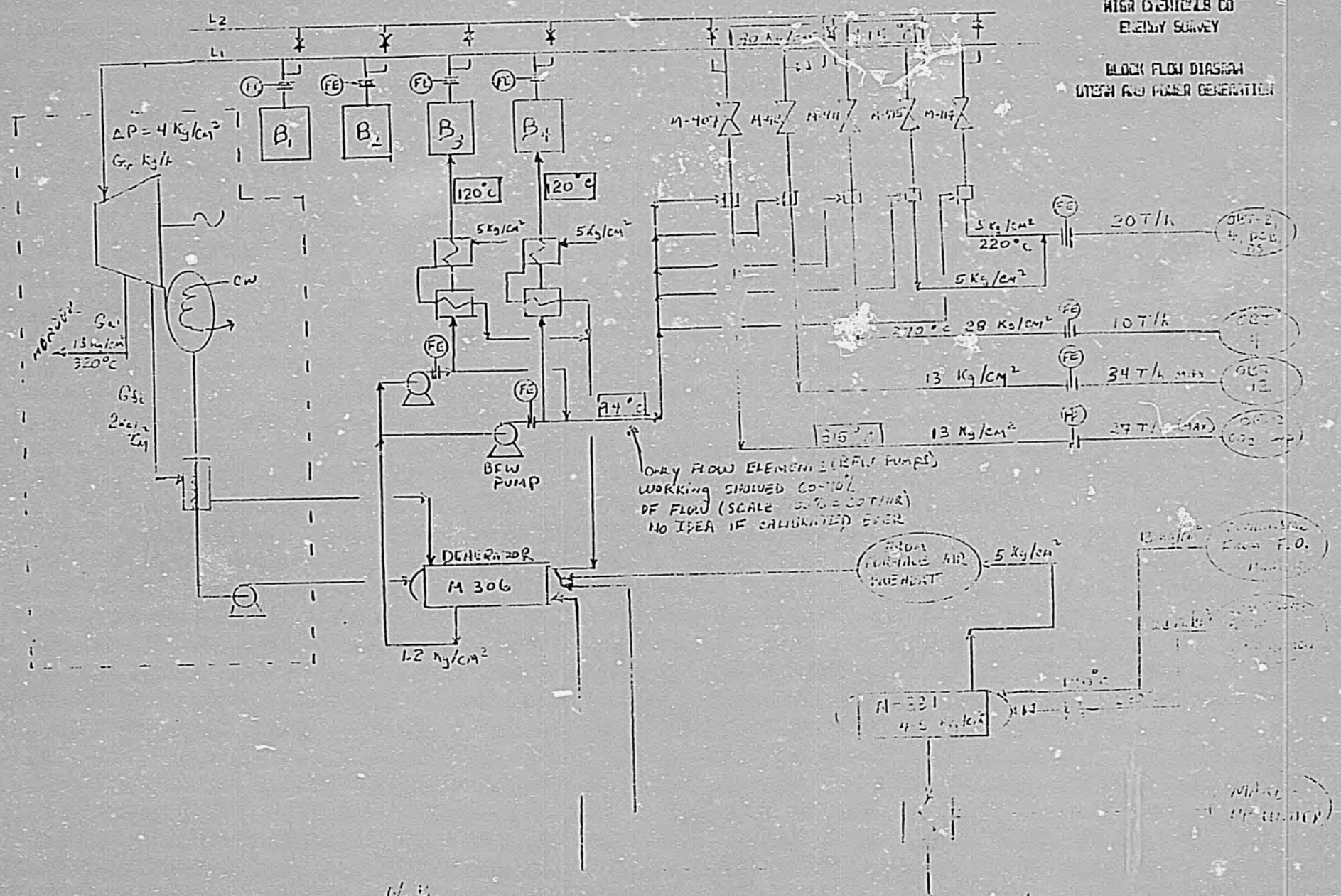

TABLE E-1
Steam Boilers: Boiler Efficiency
Sensitivity Analysis - Air Infiltration

Basis: 40 ton/hr steam
1183 btu/lb steam
19,000 kj/lb mazot
FD fan air flow: 61,350 kg/hr
Flue gas temperature at economizer inlet: 420 C
O2 in flue gas at economizer inlet: 11.4%
BFW at economizer inlet: 20 C
BFW at economizer outlet: 189 C
Air preheater air temperature - inlet 69 C
Air preheater air temperature - outlet 189 C

Infiltration Air in Furnace (%of FD fan)	Infiltration Air at Economizer (of FD fan)	Boiler Efficiency (%)	Mazot Consumption (kg/hr)	Total Air Flow (kg/hr)	Backend Temperature (C)
0%	0%	84%	3128	61,350	219 C
10%	0%	82%	3204	67,485	236 C
20%	0%	80%	3284	73,620	251 C
30%	0%	79%	3326	79,755	264 C
40%	0%	78%	3369	85,890	275 C
50%	0%	75%	3503	92,025	284 C
60%	0%	74%	3551	98,160	292 C
70%	0%	72%	3649	104,295	300 C
0%	0%	84%	3128	61,350	219 C
0%	10%	81%	3244	67,485	274 C
0%	20%	78%	3369	73,620	327 C
0%	30%	76%	3457	79,755	378 C
0%	40%	74%	3551	85,890	426 C
0%	50%	72%	3649	92,025	473 C
0%	60%	70%	3754	98,160	519 C
0%	70%	68%	3864	104,295	563 C
30%	0%	79%	3326	79,755	264 C
30%	10%	76%	3457	85,890	304 C
30%	20%	74%	3551	92,025	343 C
30%	30%	72%	3649	98,160	381 C
30%	40%	71%	3701	104,295	417 C

72

APPENDIX F
BILL OF MATERIALS/CAPITAL COST BREAKDOWN

TABLE F-1

BILL OF MATERIALS

Plant: MISR Chemicals

Recommendation: 5.3 - Rehab 4 Boilerhouse Steam Flowmeters

Transmitter	D/P cell and pneumatic transmitter, carbon steel body, SS element, air filter-regulator set, 0-100" W.C. 40-bar static.	(4)
Recorder	D/P flow recorder, pneumatic, air filter-regulator, electric chart drive	(4)
Misc. Materials	(pneumatic tubing, fittings, supports, etc.)	
Rehabilitate	Pull orifice plate, measure, re-machine, if necessary	
	Inspect flanges, re-drill/re-tap, if necessary	

Recommendation: 5.3 - Energy Monitoring Instrumentation

Mazot meters	Direct readout flowmeters, mechanical, integrator, shuntflow or full flow. 0.5 m^3/hr (2), 0-10 m^3/hr (2)	(4)
Boiler Steam	Flowmeters (2)	
Rehabilitate	Clean flanges, retap, if necessary, check and replace tubing.	
	Pull orifice plate, check edges, re-machine or replace.	
Transmitter	D/P cell and pneumatic transmitter, SS diaphragm, carbon steel body, air filter-regulator set.	(1)
Recorder	D/P flow recorder, pneumatic, electric drive, air filter-regulator	(1)
Boiler Steam	Flowmeter - Aux Steam - 5 Bar	(1)
Flanges	Orifice Flanges 150#	
Plate	Orifice Plate	

Transmitter	D/P cell and pneumatic transmitter, SS element, carbon steel body, 0-100" W.C., 40-bar static.	
Recorder	D/P flow recorder, pneumatic, electric chart drive	
Misc. tubing, fittings, supports, etc.		

Recommendation: 6.1 - DCB Steam Usage

Transmitter	D/P cell and pneumatic transmitter, carbon steel body, SS element air filter-regulator set, 0-100" W.C., 1 bar static	(1)
Recorder	D/P flow recorder, pneumatic, air filter-regulator set	(1)
Misc. Materials (pneu tubing, fittings) supports, etc.		1 lot

Recommendation: 6.3 - Control RHSB Stripping Efficiency

Transmitter	D/P cell and pneumatic transmitter, SS diaphragm, carbon steel body, air filter-regulator set, 0-100" W.C., 5-bar static	(1)
Recorder	D/P flow recorder (remote), pneumatic, electric chart drive, air filter-regulator set	(1)
Rehabilitate	Clean flanges, re-tap, if necessary, check and replace tubing	
	Pull orifice plate, check edges, diameter, re-machine or replace as necessary	
Misc.	Tubing, fittings, supports, etc.	

Recommendation: 6.4 - Condensate Recovery

Controller	Level controller, top mounted, displacement-type, relay closure	(1)
PRV	Relief valve, 2 bar set point, 150#	
Pump	45 gpm, 100' head, centrifugal, 2" x 1½" 2 hp electric drive, carbon steel	(1)
Vessel	3 kg/cm^2 design pressure, carbon steel, 1.2 m Ø x 2.4 m high, vertical	(1)
Piping and valves	Local only, use existing condensate lines	

Insulation	Calcium silicate, aluminum jacket	
Foundation and Pad	Above grade	

Recommendation: 6.5 - Flash Steam Recovery

Controller	Level controller, pneumatic, local mount, proportional output, air filter-regulation set	(1)
Controller	Pressure controller, pneumatic, local mount, 0-15 bar, air filter-regulator set	(2)
Transmitter	Level transducer and pneu transmitter, proportional output-type, air filter-regulator set	(1)
Transmitter	Pressure transducer and pneu transmitter, 0-15 bar, 10 bar static, SS element, carbon steel body, air filter-regulator set	(1)
Control Valves	Pneumatic control valves, 400# flange, cast iron, positioner, airset — 400#-3", 400#-2", 400#-1"	(2)
PRV	Relief value, 12 kg/cm^2 set point — 400#	(1)
Tank	1.5 mθ x 4m high, carbon steel, Vertical, 12 kg/cm^2 working pressure, 16/cm^2 design pressure	(1)
Values	Carbon Steel, 400# 4"	(7)
	3"	(6)
	2"	(2)
Piping	-local only, use existing condensate return line	
Insulation	Calcium silicate, aluminum jacket	
Foundation and Pad		
Steel	Support, ladder, access problem	

Recommendation: 6.5 - Condensate Recovery

Activated Carbon Absorber (1)

Skid mounted, CA-2000-150
Single train, 4000 lb carbon charge
Prepiped with prefilter, post-filter, local control instrumentation, see Appendix B for typical data.

Foundation and Pad		(1)
Carbon Charge	3300 lb/charge	(1)

Recommendation: 6.6 - Reduce Boiler Air Infiltration

Rehabilitate	As necessary, ID fan dampers, pull, clean repair mechanism	(2)
Draft Gauge	Direct connect draft gauge -10" to +10" W.C., local indicator	(20
O_2 Monitor	Oxygen analyzer, zirconia or fuel cell, local readout, with sampling system, continuous	(2)
Misc.	Tighten up infiltration points, patch shell as necessary, fix inspection ports and seals	

TABLE F-2

Summary of Capital Cost Estimates
Plant: MISR

Recommendation		Major Equipment Local[1]	Major Equipment Foreign[2]	Local Materials[1]	Installation Labor Local[1]	Installation Labor Foreign	Total Local[1]	Total Foreign[2]
5.3	Steam Flowmeters	--	$ 6,400	$ 3,600	[3]	--	$ 3,600	$ 6,400
5.3	Boiler Instrumentation	--	$11,200	$ 3,800	[3]	--	$ 3,800	$11,200
6.1	DCB Steam	--	$ 1,600	$ 900	[3]	--	$ 900	$ 1,600
6.2	Distiller Endpoint	negligible[4]	--	--	--	--	negligible	--
6.3	RHSB Control	--	$ 1,600	$ 900	[3]	--	$ 900	$ 1,600
6.4	Condensate Recovery	$ 7,000	--	$ 6,500	$ 4,500	--	$18,000	--
6.5	Flash Steam	$23,000	$20,000	$16,000	$11,000	$5,000	$50,000	$25,000
6.5	Condensate Recovery	$15,000	$58,000	$13,000	$ 8,000	$6,000	$36,000	$64,000
6.6	Excess Air Control[6]	--	$15,000	$ 4,000	$ 5,000	--	$ 9,000	$15,000

Note:

See Bill of Materials for equipment/materials description.

[1] Currency conversion at L.E. 2.2/USD
[2] Does not include import duties/taxes
[3] Can be installed on normal plant maintenance budget
[4] Procure pens, recorder paper
[5] Plus the cost to develop new analytical technique
[6] Two of the existing four boilers

Appendix G
Heat and Material Balance Calculations

The heat and material balance calculations are presented in the following programs. They are written in Pascal and, therefore, the calculations are transparent from the arithmetic statements in the programs themselves.

Table G-1 lists the names and the definitions of the variables used in the programs. The 'w' index is simply an array pointer, as a convenience in transferring input and output data from files.

Input is maintained on a separate file named INFILE.DTA, and OUTFILE.DTA (outfile contains five case studies) and is used as input to the report generator.

The calculations are performed two ways:

Program KILN3.PAS computes a balance when the coke dose (among the other variables) is specified. It makes a trial balance, estimating the total heat released and the quantity of and/or coke to deevlop that heat. It recalculates the heat release and compares to the original balance. The heat release estimates are adjusted to reflect the difference (error). If the difference is small (less than 0.001 mcal in these studies) the results are written to OUTFILE.DTA; if not small, the calculation is iterated.

Program KILN4.PAS differs from KILN3.PAS in that the exact coke dose needed to close the balance is calculated. It begins with a coke dose estimate and then proceeds to converge exactly as KILN3. Next the required (calculated) dose is compared with the trial estimate. If the difference is small (0.001 kg used) the results are written to OUTFILE.DTA; if not small, the dose is re-estimated and the outer loop iterates.

Both programs have set up procedures to assist in specifying and modifying the individual case study input from INFILE.DTA and in saving the results on OUTFILE.DTA. These procedures have prompts on the CRT.

REPORT3.PAS develops the corresponding report from OUTFILE.DTA produced by KILN3.PAS. A corresponding report generator for KILN4 is not reproduced here.

Best Available Document

TABLE G-1
DIRECTORY OF VARIABLES
LIME KILN HEAT AND MATERIAL BALANCE

30 JAN 88. VARIABLE LIST. NON-DOCUMENT MODE.

BASIS: LIMESTONE INPUT = 1.00 TON

NAME	(W) INDEX	VALUE	DEFINITION (INPUT)	
AL[0]	1		LIME ANALYSIS.	% Insoluble Matter
AL[1]	2			R2O3
AL[2]	3			CaO
AL[3]	4			CaCO3
AL[4]	5			MgO
AL[5]	6			SO4
AL[6]	7			moisture
TL	8		Extract Temp. Degr c.	
MC	9		COKE	% moisture
AC[1]	10		(dry basis)	% Ash
AC[2]	11			Volatiles
AC[3]	12			Fixed Carbon
HCV	13		Heating Value. Kcal/kg	
DOSE	14		Dose: Kg Coke/Ton Limestone	
TA	15		AIR	Ambient Air Temp. degr c.
TKG	16		GAS	Kiln Gas Temp. degr c.
AKG[1]	17	KILN GAS ANALYSIS		% CO2 (For reference only)
AKG[2]	18			CO
AKG[3]	19			O2
MLS	20		LIMESTONE	% Moisture
TLS	21			Temp. degr c.
LOSS	22	HEAT LOSSES	% of total heat input (radiation/convect	

FACTOR LIST

F[1]	23	429000	Heat of calcining. Kcal/ton CaCO3
F[2]	24	289000	MgCO3
F[3]	25	556	Heat of Vaporiz. Kcal/kg Moisture
F[4]	26	.217	Heat capy. Kcal/kg deg c. Extract
F[5]	27	.265	Coke
F[6]	28	.237	Air and CO2
F[7]	29	.1	(kcal) TEST for convergence.

Best Available Document

79

TABLE G-1 (CONTINUED)

INTERMEDIATE AND OUTPUT VARIABLES

(W)	VARIABLE NAME	
30	ALS[0]	LIMESTONE (Inferred) % Insoluble matter
31	ALS[1]	R_2O_3
32	ALS[2]	$CaCO_3$
33	ALS[3]	$MgCO_3$
34	ALS[4]	SO_4
35	ALS[5]	% Moisture
36	HT[1]	HEAT of Calcining. Kcal. Limestone. $CaCO_3$
37	HT[2]	$MgCO_3$
38	HT[3]	for drying Limestone and Coke. Kcal
39	HT[4]	Loss with extract. Lime Kcal.
40	HT[5]	Coke Kcal
41	HT[6]	Loss with CO_2: Calcining. Kcal
42	HT[7]	Loss with combustion exhaust. Kcal
43	HT[8]	Convective and radiative loss. Kcal
44	GAS[1]	CO_2 from calcining -CO_3 (Total). Kg moles
45	GAS[2]	CO_2 from combustion(Total). Kg moles
46	GAS[3]	Non-CO_2 from Combustion (Total). Kg moles
47	EXT[1]	Extracted Lime. Kg
48	EXT[2]	Extracted Coke. Kg
49	Q	Total heat input Kcal
50	PCT	percent $CaCO_3$ converted

```
        PROGRAM KILN3 (INPUT, OUTPUT,INFO,EXFO);

        VAR X,Y,Q,PCT,COKE: REAL;
            HVC,DOSE,TL,MC,TA,TKG,LOSS,MLS,TLS :REAL;
             AL: ARRAY[0..6] OF REAL;
             AC: ARRAY[1..3] OF REAL;
            ARG: ARRAY[1..3] OF REAL;
              F: ARRAY[1..7] OF REAL;
            ALS: ARRAY[0..5] OF REAL;
             HT: ARRAY[1..8] OF REAL;
            GAS: ARRAY[1..3] OF REAL;
            EXT: ARRAY[1..2] OF REAL;
              W: ARRAY[1..50]OF REAL;
            COUNT,I:INTEGER;
            M,N:INTEGER;
            WMN: ARRAY[1..5,1..50] OF REAL;
            INFO: FILE OF REAL;
            EXFO: FILE OF REAL;
    VALUE:REAL;
        BEGIN
RESET(INFO,'C:INFILE.DTA',BINARY,1024);

FOR I:= 1 TO 29 DO
BEGIN

W[I]:= INFO^;GET(INFO);
END;


REPEAT

FOR I:= 1 TO 4 DO
BEGIN
WRITE(I:3,W[I]:12:3);
END;
WRITELN(I:3,W[I]:12:3);

FOR I:= 6 TO 9 DO
BEGIN
WRITE(I:3,W[I]:12:3);
END;
WRITELN(I:3,W[I]:12:3);

FOR I:= 11 TO 14 DO
BEGIN
WRITE(I:3,W[I]:12:3);
END;
```

```
WRITELN(I:3,W[I]:12:3);

FOR I:= 16 TO 19 DO
BEGIN
WRITE(I:3,W[I]:12:3);
END;
WRITELN(I:3,W[I]:12:3);

FOR I:= 21 TO 24 DO
BEGIN
WRITE(I:3,W[I]:12:3);
END;
WRITELN(I:3,W[I]:12:3);

FOR I:= 26 TO 29 DO
BEGIN
WRITE(I:3,W[I]:12:3);
END;
WRITELN(I:3,W[I]:12:3);

REPEAT

READ(I); READLN(VALUE);
W[I]:= VALUE;

UNTIL (I=30);


FOR I:= 1 TO 4 DO
BEGIN
WRITE(I:3,W[I]:12:3);
END;
WRITELN(I:3,W[I]:12:3);

FOR I:= 6 TO 9 DO
BEGIN
WRITE(I:3,W[I]:12:3);
END;
WRITELN(I:3,W[I]:12:3);

FOR I:= 11 TO 14 DO
BEGIN
WRITE(I:3,W[I]:12:3);
END;
WRITELN(I:3,W[I]:12:3);

FOR I:= 16 TO 19 DO
BEGIN
WRITE(I:3,W[I]:12:3);
END;
WRITELN(I:3,W[I]:12:3);

FOR I:= 21 TO 24 DO
BEGIN
WRITE(I:3,W[I]:12:3);
```

```
END;
WRITELN(I:3,W[I]:12:3);

FOR I:= 26 TO 28 DO
BEGIN
WRITE(I:3,W[I]:12:3);
END;
WRITELN(I:3,W[I]:12:3);

REWRITE(INFO,'C:INFILE.DTA',BINARY,1024);

FOR I:= 1 TO 29 DO
BEGIN
INFO^:= W[I];PUT(INFO);
END;

CLOSE (INFO);

AL[0]:=W[ 1];
AL[1]:=W[ 2];
AL[2]:=W[ 3];
AL[3]:=W[ 4];
AL[4]:=W[ 5];
AL[5]:=W[ 6];
AL[6]:=W[ 7];
TL    :=W[ 8];
MC    :=W[ 9];
AC[1]:=W[ 10];
AC[2]:=W[ 11];
AC[3]:=W[ 12];
HVC   :=W[ 13];
DOSE  :=W[ 14];
TA    :=W[ 15];
TKG   :=W[ 16];
AKG[1]:=W[17];
AKG[2]:=W[18];
AKG[3]:=W[19];
MLS    :=W[20];
TLS    :=W[21];
LOSS   :=W[22];
F[1]   :=W[23];
F[2]   :=W[24];
F[3]   :=W[25];
F[4]   :=W[26];
F[5]   :=W[27];
F[6]   :=W[28];
F[7]   :=W[29];


        FOR I:= 1 TO 8 DO
        BEGIN
        HT[I]:= 0.0;
        END;

COLNT:= 0;
```

```
        ALS[0]:= AL[0];
        ALS[1]:= AL[1];
        ALS[2]:= AL[3] + 1.785714*AL[2];
        ALS[3]:= AL[4]*84.3/40.3;
        ALS[4]:= AL[5];
        ALS[5]:= 0.0;
        X:= 100.0-MLS;
        Y:=0.0;

        FOR I:= 0 TO 4 DO
        BEGIN
        Y:= Y+ ALS[I];
        END;
        FOR I:= 0 TO 4 DO
        BEGIN
        ALS[I]:= X*ALS[I]/Y;
        END;

        ALS[5]:= MLS;

        PCT:= 100.0*AL[2]/(AL[2]+ (56.0*AL[3]/100.0));

        HT[1]:= PCT*ALS[2]*F[1]/10000.0;
        HT[2]:= ALS[3]*F[2]/100.0;
        GAS[1]:= PCT*ALS[2]/1000.0 + (ALS[3]*10.0/84.3);
        EXT[1]:= 1000.0 - MLS*10.0 - (GAS[1]*44.0);
        HT[3]:= F[3]*(ALS[5]*10.0 + (DOSE*MC/100.0));
        HT[4]:= EXT[1]*(TL - TLS)*F[4];
        HT[6]:= 44.0*GAS[1]*F[6]*(TKG-TLS);

REPEAT

        X:= 0.0;
        FOR I:= 1 TO 7 DO
        BEGIN
        X:= X + HT[I];
        END;

        HT[8]:= X*LOSS/(100.0 - LOSS);

        Q:= X + HT[8];
        COKE:= Q/HVC;
        EXT[2]:= DOSE*(100.0-MC)/100.0 - COKE;
        COKE:= AC[3]*COKE/(100.0 - MC);
        GAS[2]:= COKE/12.0;
        GAS [3]:= 0.791*GAS[2]/0.209;
        HT[7]:= (44.0*GAS[2] + 28.0*GAS[3])*F[6]*(TKG - TA);


        HT[5]:= F[5]*EXT[2]*(TL-TLS);

        X:= 0.0;
        FOR I:= 1 TO 8 DO
        BEGIN
```


84

```
        X:= X + HT[I];
        END;

Y:= ABS(X-Q);
COUNT:=COUNT+1;

UNTIL Y<F[7];

W[30]:= ALS[0];
W[31]:= ALS[1];
W[32]:= ALS[2];
W[33]:= ALS[3];
W[34]:= ALS[4];
W[35]:= ALS[5];
W[36]:= HT[1];
W[37]:= HT[2];
W[38]:= HT[3];
W[39]:= HT[4];
W[40]:= HT[5];
W[41]:= HT[6];


W[42]:= HT[7];
W[43]:= HT[8];
W[44]:= GAS[1];
W[45]:= GAS[2];
W[46]:= GAS[3];
W[47]:= EXT[1];
W[48]:= EXT[2];
W[49]:= Q;
W[50]:= PCT;



FOR I:= 30 TO 33 DO
BEGIN
WRITE(I:3,W[I]:12:3);
END;
WRITELN(I:3,W[I]:12:3);

FOR I:= 35 TO 38 DO
BEGIN
WRITE(I:3,W[I]:12:3);
END;
WRITELN(I:3,W[I]:12:3);

FOR I:= 40 TO 43 DO
BEGIN
WRITE(I:3,W[I]:12:3);
END;
WRITELN(I:3,W[I]:12:3);

FOR I:= 45 TO 48 DO
BEGIN
WRITE(I:3,W[I]:12:3);
```

```
END;
WRITELN(I:3,W[I]:12:3);
I:=I+1;
WRITELN(I:3,W[I]:12:3);


WRITELN(' ');
WRITELN('TO SAVE AS CASE M=1..5, ENTER M. ENTER 0 TO ABANDON');
READ(M);
IF M=0 THEN
 BEGIN
M:=0;
 END
ELSE
 BEGIN
FOR N:= 1 TO 50 DO
  BEGIN
WMN[M,N]:=W[N];

  END;
 END;


WRITELN(' ');
WRITELN('TO SAVE CASES 1..5, ENTER 1. TO CONTINUE, ENTER 0');
READ(I);
UNTIL I=1;



REWRITE(EXFO,'C:OUTFILE.DTA',BINARY,1024);

FOR M:=1 TO 5 DO
BEGIN

FOR I:= 1 TO 50 DO
BEGIN
EXFO^:= WMN[M,I];PUT(EXFO);
END;

END;
CLOSE (EXFO);

        END.
```

```
PROGRAM REPORT3 (INPUT, OUTPUT, INFO);

VAR I:INTEGER;
    M,N:INTEGER;
    WMN: ARRAY[1..5,1..54] OF REAL;
    INFO: FILE OF REAL;
BEGIN
RESET(INFO,'C:OUTFILE.DTA',BINARY,1024);


FOR M:=1 TO 5 DO
BEGIN

FOR I:= 1 TO 50 DO
BEGIN
WMN[M,I]:=INFO^;GET(INFO);
END;
END;

FOR M:= 1 TO 5 DO
BEGIN
WMN[M,51]:=100.0*(WMN[M,36]+WMN[M,37])/WMN[M,49];
END;

FOR M:= 1 TO 5 DO
BEGIN
WMN[M,52]:=10000.0*(WMN[M,36]+WMN[M,37])/(WMN[M,14]*(100.0-WMN[M,
N[M,13]);
END;

FOR M:= 1 TO 5 DO
BEGIN
WMN[M,53]:=10000.0*WMN[M,48]/(WMN[M,14]*(100.0-WMN[M,  9]);
END;

FOR M:= 1 TO 5 DO
BEGIN
WMN[M,54]:=100.0*(WMN[M,44]+WMN[M,45])/(WMN[M,44]+WMN[M,45]+WMN[M,4
END;


WRITE  ('                                                  ');
WRITELN('                TABLE D-1                         ');
WRITE  ('                                                  ');
WRITELN('          LIME KILN HEAT BALANCE                  ');
WRITE  ('                                                  ');
WRITELN('           SENSITIVITY ANALYSIS                   ');
WRITE  ('                                                  ');
WRITELN('EFFECT OF RADIATION AND CONVECTION LOSS');
WRITE  ('                                                  ');
```

```
WRITELN('        CASE 1       CASE 2       CASE 3       CASE 4
;
WRITELN('                          INPUT DATA
WRITE  ('HEAT LOSS TO RADIATION AND CONVECTION (% OF HEAT RELEASED
;
N:=22;
FOR M:= 1 TO 4 DO
BEGIN
WRITE  (WMN[M,N]:12:2);
END;
WRITELN(WMN[M,N]:12:2);
WRITE  ('COKE DOSE (Kg Coke/Ton Limestone)
;
N:=14;
FOR M:= 1 TO 4 DO
BEGIN
WRITE  (WMN[M,N]:12:1);
END;
WRITELN(WMN[M,N]:12:1);
WRITE  ('Moisture, %: Limestone
N:=20;
FOR M:= 1 TO 4 DO
BEGIN
WRITE  (WMN[M,N]:12:2);
END;
WRITELN(WMN[M,N]:12:2);
WRITE  ('              Coke
N:= 7;
FOR M:= 1 TO 4 DO
BEGIN
WRITE  (WMN[M,N]:12:2);
END;
WRITELN(WMN[M,N]:12:2);
WRITE  ('Analysis. Lime, %: Insoluble Matter
N:= 1;
FOR M:= 1 TO 4 DO
BEGIN
WRITE  (WMN[M,N]:12: 2);
END;
WRITELN(WMN[M,N]:12: 2);
WRITE  ('                          R2O3
N:= 2;
FOR M:= 1 TO 4 DO
BEGIN
WRITE  (WMN[M,N]:12:2);
END;
WRITELN(WMN[M,N]:12:2);
WRITE  ('                          Calcium Oxide
N:= 3;
FOR M:= 1 TO 4 DO
BEGIN
WRITE  (WMN[M,N]:12:2);
END;
WRITELN(WMN[M,N]:12:2);
WRITE  ('                          Calcium Carbonate
N:= 4;
FOR M:= 1 TO 4 DO
BEGIN
```

```
WRITE  (WMN[M,N]:12:2);
END;
WRITELN(WMN[M,N]:12:2);
WRITE  ('                    Magnesium Oxide
N:= 5;
FOR M:= 1 TO 4 DO
BEGIN
WRITE  (WMN[M,N]:12:2);
END;
WRITELN(WMN[M,N]:12:2);
WRITE  ('                    SO4
N:= 6;
FOR M:= 1 TO 4 DO
BEGIN
WRITE  (WMN[M,N]:12:2);
END;
WRITELN(WMN[M,N]:12:2);
WRITE  ('                    Moisture
N:= 7;
FOR M:= 1 TO 4 DO
BEGIN
WRITE  (WMN[M,N]:12:2);
END;
WRITELN(WMN[M,N]:12:2);
WRITE  ('          Coke, % (Dry Basis): Ash
N:=10;
FOR M:= 1 TO 4 DO
BEGIN
WRITE  (WMN[M,N]:12:2);
END;
WRITELN(WMN[M,N]:12:2);
WRITE  ('                                Volatile Matter
N:=11;
FOR M:= 1 TO 4 DO
BEGIN
WRITE  (WMN[M,N]:12:2);
END;
WRITELN(WMN[M,N]:12:2);
WRITE  ('                                Fixed Carbon
N:=12;
FOR M:= 1 TO 4 DO
BEGIN
WRITE  (WMN[M,N]:12:2);
END;
WRITELN(WMN[M,N]:12:2);
WRITE  ('Calorific Value. Coke, Kcal/Kg (Dry Basis)
N:=13;
FOR M:= 1 TO 4 DO
BEGIN
WRITE  (WMN[M,N]:12:2);
END;
WRITELN(WMN[M,N]:12:2);
WRITE  ('Temperature. Kiln Extract, degrees c.
N:= 8;
FOR M:= 1 TO 4 DO
```

89');

```
BEGIN
WRITE  (WMN[M,N]:12:0);
END;
WRITELN(WMN[M,N]:12:0);
WRITE  ('                Kiln Gas,
N:=16;
FOR M:= 1 TO 4 DO
BEGIN
WRITE  (WMN[M,N]:12:0);
END;
WRITELN(WMN[M,N]:12:0);
WRITE  ('                Limestone and Coke
N:=21;
FOR M:= 1 TO 4 DO
BEGIN
WRITE  (WMN[M,N]:12:0);
END;
WRITELN(WMN[M,N]:12:0);
WRITE  ('                Air
N:=15;
FOR M:= 1 TO 4 DO
BEGIN
WRITE  (WMN[M,N]:12:0);
END;
WRITELN(WMN[M,N]:12:0);
WRITELN('
WRITELN('        HEAT AND MATERIAL BALANCE (BASED ON INPUT DATA)
WRITE  ('TOTAL HEAT RELEASED IN KILN (Kcal)
N:=49;
FOR M:= 1 TO 4 DO
BEGIN
WRITE  (WMN[M,N]:12:0);
END;
WRITELN(WMN[M,N]:12:0);
WRITE  ('EFFICIENCY(1): Heat of calcining/Total Heat Released
;
N:=51;
FOR M:= 1 TO 4 DO
BEGIN
WRITE  (WMN[M,N]:12:2);
END;
WRITELN(WMN[M,N]:12:2);
WRITE  ('EFFICIENCY(2): Heat of calcining/Calorific value of Coke
,
N:=52;
FOR M:= 1 TO 4 DO
BEGIN
WRITE  (WMN[M,N]:12:2);
END;
WRITELN(WMN[M,N]:12:2);
WRITE  ('ESTIMATED COKE IN EXTRACT: Kg (Dry basis)
N:=48;
FOR M:= 1 TO 4 DO
BEGIN
WRITE  (WMN[M,N]:12:1);
```

```
WRITE  (WMN[M,N]:12:0);
END;
WRITELN(WMN[M,N]:12:1);
```

```
WRITE  ('          COKE IN EXTRACT: Percent of Coke Dose
N:=53;
FOR M:= 1 TO 4 DO
BEGIN
WRITE  (WMN[M,N]:12:2);
END;
WRITELN(WMN[M,N]:12:2);
WRITE  ('          CARBON DIOXIDE IN KILN GAS:
N:=54;
FOR M:= 1 TO 4 DO
BEGIN
WRITE  (WMN[M,N]:12:2);
END;
WRITELN(WMN[M,N]:12:2);
WRITE  ('          CONVERSION OF AVAILABLE CALCIUM CARBONATE
N:=50;
FOR M:= 1 TO 4 DO
BEGIN
WRITE  (WMN[M,N]:12:2);
END;
WRITELN(WMN[M,N]:12:2);
WRITE  ('Heat Consumption, Kcal: Calcining, Calcium Carbonate
;
N:=36;
FOR M:= 1 TO 4 DO
BEGIN
WRITE  (WMN[M,N]:12:0);
END;
WRITELN(WMN[M,N]:12:0);
WRITE  ('                                    Magnesium Carbonate
N:=37;
FOR M:= 1 TO 4 DO
BEGIN
WRITE  (WMN[M,N]:12:0);
END;
WRITELN(WMN[M,N]:12:0);
WRITE  ('                              Drying, Limestone and Coke
N:=38;
FOR M:= 1 TO 4 DO
BEGIN
WRITE  (WMN[M,N]:12:0);
END;
WRITELN(WMN[M,N]:12:0);
WRITE  ('                              Sensible Heat, Extract Lime
N:=39;
FOR M:= 1 TO 4 DO
BEGIN
WRITE  (WMN[M,N]:12:0);
END;
WRITELN(WMN[M,N]:12:0);
WRITE  ('                                        Extract Coke:
N:=40;
FOR M:= 1 TO 4 DO
```

```
FOR M:= 1 TO 4 DO
BEGIN
WRITE  (WMN[M,N]:12:0);
END;
```



```
WRITELN(WMN[M,N]:12:0);
WRITE  ('                                    Kiln Gas (Calcining)
N:=41;
FOR M:= 1 TO 4 DO
BEGIN
WRITE  (WMN[M,N]:12:0);
END;
WRITELN(WMN[M,N]:12:0);
WRITE  ('                                    Kiln gas (Combustion)
N:=42;
FOR M:= 1 TO 4 DO
BEGIN
WRITE  (WMN[M,N]:12:0);
END;
WRITELN(WMN[M,N]:12:0);
WRITE  ('                          Convective and Radiative Losses
N:=43;
FOR M:= 1 TO 4 DO
BEGIN
WRITE  (WMN[M,N]:12:0);
END;
WRITELN(WMN[M,N]:12:0);
WRITE  ('Extracted Lime, Kg
N:=47;
FOR M:= 1 TO 4 DO
BEGIN
WRITE  (WMN[M,N]:12:1);
END;
WRITELN(WMN[M,N]:12:1);
WRITE  ('          Coke, Kg
N:=48;
FOR M:= 1 TO 4 DO
BEGIN
WRITE  (WMN[M,N]:12:1);
END;
WRITELN(WMN[M,N]:12:1);
WRITE  ('Limestone Analysis, %:  Insoluble Matter
N:=30;
FOR M:= 1 TO 4 DO
BEGIN
WRITE  (WMN[M,N]:12:2);
END;
WRITELN(WMN[M,N]:12:2);
WRITE  ('                        R2O3
N:=31;
FOR M:= 1 TO 4 DO
BEGIN
WRITE  (WMN[M,N]:12:2);
END;
WRITELN(WMN[M,N]:12:2);
WRITE  ('                        Calcium carbonate
N:=32;
```

```
... ...,
FOR M:= 1 TO 4 DO
BEGIN
WRITE  (WMN[M,N]:12:2);
```

```
END;
WRITELN(WMN[M,N]:12:2);
WRITE  ('                                Magnesium carbonate
N:=33;
FOR M:= 1 TO 4 DO
BEGIN
WRITE  (WMN[M,N]:12:2);
END;
WRITELN(WMN[M,N]:12:2);
WRITE  ('                                SO4
N:=34;
FOR M:= 1 TO 4 DO
BEGIN
WRITE  (WMN[M,N]:12:2);
END;
WRITELN(WMN[M,N]:12:2);
WRITE  ('                                Moisture
N:=35;
FOR M:= 1 TO 4 DO
BEGIN
WRITE  (WMN[M,N]:12:2);
END;
WRITELN(WMN[M,N]:12:2);
WRITE  ('Kiln Gas, Kg Moles: Carbon Dioxide (From Calcining
N:=44;
FOR M:= 1 TO 4 DO
BEGIN
WRITE  (WMN[M,N]:12:3);
END;
WRITELN(WMN[M,N]:12:3);
WRITE  ('                            Carbon Dioxide (From Combustion
N:=45;
FOR M:= 1 TO 4 DO
BEGIN
WRITE  (WMN[M,N]:12:3);
END;
WRITELN(WMN[M,N]:12:3);
WRITE  (                             Inert Gas (Nitrogen From Combustion
N:=46;
FOR M:= 1 TO 4 DO
BEGIN
WRITE  (WMN[M,N]:12:3);
END;
WRITELN(WMN[M,N]:12:3);

END.
```

```
PROGRAM KILN4 (INPUT, OUTPUT,INFO,EXFO);

VAR X,Y,Q,PCT,COKE: REAL;
    HVC,DOSE,TL,MC,TA,TKG,LOSS,MLS,TLS :REAL;
     AL: ARRAY[0..6] OF REAL;
     AC: ARRAY[1..3] OF REAL;
    AAS: ARRAY[1..3] OF REAL;
      F: ARRAY[1..7] OF REAL;
    ALS: ARRAY[0..5] OF REAL;
     HT: ARRAY[1..8] OF REAL;
    GAS: ARRAY[1..3] OF REAL;
    EXT: ARRAY[1..2] OF REAL;
      W: ARRAY[1..50]OF REAL;
    COUNT,I:INTEGER;
    M,N:INTEGER;
    WMN: ARRAY[1..5,1..50] OF REAL;
    INFO: FILE OF REAL;
    EXFO: FILE OF REAL;
VALUE:REAL;
    BEGIN
RESET(INFO,'C:INFILE.DTA',BINARY,1024);

FOR I:= 1 TO 29 DO
BEGIN

W[I]:= INFO^;GET(INFO);
END;


REPEAT

FOR I:= 1 TO 4 DO
BEGIN
WRITE(I:3,W[I]:12:3);
END;
WRITELN(I:3,W[I]:12:3);

FOR I:= 6 TO 9 DO
BEGIN
WRITE(I:3,W[I]:12:3);
END;
WRITELN(I:3,W[I]:12:3);

FOR I:= 11 TO 14 DO
BEGIN
WRITE(I:3,W[I]:12:3);
```

```
END;
WRITELN(I:3,W[I]:12:3);

FOR I:= 16 TO 19 DO
BEGIN
WRITE(I:3,W[I]:12:3);
END;
WRITELN(I:3,W[I]:12:3);

FOR I:= 21 TO 24 DO
BEGIN
WRITE(I:3,W[I]:12:3);
END;
WRITELN(I:3,W[I]:12:3);

FOR I:= 26 TO 29 DO
BEGIN
WRITE(I:3,W[I]:12:3);
END;
WRITELN(I:3,W[I]:12:3);

REPEAT

READ(I); READLN(VALUE);
W[I]:= VALUE;

UNTIL (I=30);


FOR I:= 1 TO 4 DO
BEGIN
WRITE(I:3,W[I]:12:3);
END;
WRITELN(I:3,W[I]:12:3);

FOR I:= 6 TO 9 DO
BEGIN
WRITE(I:3,W[I]:12:3);
END;
WRITELN(I:3,W[I]:12:3);

FOR I:= 11 TO 14 DO
BEGIN
WRITE(I:3,W[I]:12:3);
END;
WRITELN(I:3,W[I]:12:3);

FOR I:= 16 TO 19 DO
BEGIN
WRITE(I:3,W[I]:12:3);
END;
WRITELN(I:3,W[I]:12:3);

FOR I:= 21 TO 24 DO
BEGIN
```


95

```
WRITE(I:3,W[I]:12:3);
END;
WRITELN(I:3,W[I]:12:3);

FOR I:= 26 TO 28 DO
BEGIN
WRITE(I:3,W[I]:12:3);
END;
WRITELN(I:3,W[I]:12:3);

REWRITE(INFO,'C:INFILE.DTA',BINARY,1024);

FOR I:= 1 TO 29 DO
BEGIN
INFO^:= W[I];PUT(INFO);
END;

CLOSE (INFO);

        REPEAT

AL[0]:=W[ 1];
AL[1]:=W[ 2];
AL[2]:=W[ 3];
AL[3]:=W[ 4];
AL[4]:=W[ 5];
AL[5]:=W[ 6];
AL[6]:=W[ 7];
TL    :=W[ 8];
MC    :=W[ 9];
AC[1]:=W[ 10];
AC[2]:=W[ 11];
AC[3]:=W[ 12];
HVC   :=W[ 13];
DOSE  :=W[ 14];
TA    :=W[ 15];
TRG   :=W[ 16];
ARG[1]:=W[17];
ARG[2]:=W[18];
ARG[3]:=W[19];
MLS   :=W[20];
TLS   :=W[21];
LOSS  :=W[22];
F[1]  :=W[23];
F[2]  :=W[24];
F[3]  :=W[25];
F[4]  :=W[26];
F[5]  :=W[27];
F[6]  :=W[28];
F[7]  :=W[29];


        FOR I:= 1 TO 6 DO
        BEGIN
        AT[I]:= 0.0;
```


96

```
        END;

COUNT:= 0;

        ALS[0]:= AL[0];
        ALS[1]:= AL[1];
        ALS[2]:= AL[3] + 1.785714*AL[2];
        ALS[3]:= AL[4]*84.3/40.3;
        ALS[4]:= AL[5];
        ALS[5]:= 0.0;
        X:= 100.0-MLS;
        Y:=0.0;

        FOR I:= 0 TO 4 DO
        BEGIN
        Y:= Y+ ALS[I];
        END;
        FOR I:= 0 TO 4 DO
        BEGIN
        ALS[I]:= X*ALS[I]/Y;
        END;

        ALS[5]:= MLS;

        PCT:= 100.0*AL[2]/(AL[2]+ (56.0*AL[3]/100.0));

        HT[1]:= PCT*ALS[2]*F[1]/1000.0;
        HT[2]:= ALS[3]*F[2]/100.0;
        GAS[1]:= PCT*ALS[2]/1000.0 + (ALS[3]*10.0/84.3);
        EXT[1]:= 1000.0 - MLS*10.0 - (GAS[1]*44.0);
        HT[3]:= F[3]*(ALS[5]*10.0 + (DOSE*MC/100.0));
        HT[4]:= EXT[1]*(TL - TLS)*F[4];
        HT[5]:= 44.0*GAS[1]*F[6]*(TKG-TLS);

REPEAT

        X:= 0.0;
        FOR I:= 1 TO 7 DO
        BEGIN
        X:= X + HT[I];
        END;

        HT[8]:= X*LOSS/(100.0 - LOSS);

        Q:= X + HT[8];
        COKE:= Q/AVC;
        EXT[2]:= DOSE*(100.0-MC)/100.0 - COKE;
        COKE:= AL[3]*COKE/(100.0 - MC);
        GAS[2]:= COKE/12.0;
        GAS [3]:= 0.791*GAS[2]/0.209;
        HT[7]:= (44.0*GAS[2] + 28.0*GAS[3])*F[2]*(TKG - TLS);

        HT[5]:= F[5]*EXT[2]*(TL-TLS);
```


91

```
        X:= 0.0;
        FOR I:= 1 TO 5 DO
        BEGIN
        X:= X + HT[I];
        END;

 Y:= ABS(X-3);


 UNTIL Y<F[7];

        Y:= DOSE - ((Q/HVC)*(100.0/(100.0-MC)));
        W[14]:= DOSE - Y;
 COUNT:=COUNT+1;
        Y:= ABS(Y);
        UNTIL Y<F[7];

 W[30]:= ALS[0];
 W[31]:= ALS[1];
 W[32]:= ALS[2];
 W[33]:= ALS[3];
 W[34]:= ALS[4];
 W[35]:= ALS[5];
 W[36]:= HT[1];
 W[37]:= HT[2];
 W[38]:= HT[3];
 W[39]:= HT[4];
 W[40]:= HT[5];
 W[41]:= HT[6];


 W[42]:= HT[7];
 W[43]:= HT[8];
 W[44]:= GAS[1];
 W[45]:= GAS[2];
 W[46]:= GAS[3];
 W[47]:= EXT[1];
 W[48]:= EXT[2];
 W[49]:= Q;
 W[50]:= RCT;


 FOR I:= 30 TO 33 DO
 BEGIN
 WRITE(I:3,W[I]:12:3);
 END;
 WRITELN(I:3,W[I]:12:3);

 FOR I:= 35 TO 38 DO
 BEGIN
 WRITE(I:3,W[I]:12:3);
 END;
 WRITELN(I:3,W[I]:12:3);
```

```
FOR I:= 40 TO 43 DO
BEGIN
WRITE(I:3,W[I]:12:3);
END;
WRITELN(I:3,W[I]:12:3);

FOR I:= 45 TO 48 DO
BEGIN
WRITE(I:3,W[I]:12:3);
END;
WRITELN(I:3,W[I]:12:3);
I:=I+1;
WRITELN(I:3,W[I]:12:3);


WRITELN(' ');
WRITELN('TO SAVE AS CASE M=1..5, ENTER M. ENTER 0 TO ALL ...
READ(M);
IF M=0 THEN
 BEGIN
M:=0;
 END
ELSE
 BEGIN
FOR N:= 1 TO 50 DO
  BEGIN
WMN[M,N]:=W[N];

  END;
 END;


WRITELN(' ');
WRITELN('TO SAVE CASES 1..5, ENTER 1. TO CONTINUE, ENTER ...
READ(I);
UNTIL I=1;


REWRITE(EXFO,'C:OUTFILE.DTA',BINARY,1024);

FOR M:=1 TO 5 DO
BEGIN

FOR I:= 1 TO 50 DO
BEGIN
EXFO := WMN[M,I];PUT(EXFO);
END;

END;
CLOSE (EXFO);

        END.
```


99

APPENDIX H
POWER FACTOR MEASUREMENTS

A series of power factor measurements were taken at MISR Chemical Co. to verify the plant power factor. The Electrolysis plant, by the nature of its process (D.C.), has an inherently high power factor. The Solvay plant was originally installed with capacitors at each distribution substation. The plant has been rehabilitating these capacitors over the last year or so and reports a power factor of 0.87-0.90 for the Solvay plant. Tests of individual motors (untrimmed) are summarized below.

Motor #	Description	Rating (kW)	Voltage (VAC)	Current (Amp)	pf
506	Boiler treatment	11	360	28	0.85
Sulzer #3	Boiler FW pump	150	370	250	0.94
350	Process water pump	75	370	56[1]	0.70-0.99
6/2	Drinking water pump	--	375	53	0.89
6/3	Drinking water pump	50	370	21	0.89
46/2	Cooling water process pump	37	370	66	0.84
	Lighting		370	4.5	<0.20
89/2	Vacuum pump	180	365	325	0.81
--	Workshop (#1)	--	375	110	0.35
--	Workshop (#2)	--	370	46	0.30
--	Lighting/AC	--	370	45-70	0.75-0.92
--	Water pump	250	380	275	0.80

(1) Partially loaded.

APPENDIX I
BOILER FLOW MEASUREMENTS

Boiler flow was spot-checked by measuring boiler feedwater flow using an ultrasonic flowmeter. Care was taken to ensure drum water level was constant (it is on automatic control) so steam flow rate should be approximated by boiler feedwater flow (no measure was available for blowdown). Data are summarized below.

Boiler #2

Average flow	-	9:35-10:45 a.m.
BFW	-	2.72 ft/sec
Mazout	-	4200 liter (plant flowmeter)
Water temp.	-	70°C
Pipe I.D.	-	11.5 cm
Average water flow	-	31.0 ton/hr
Equivalent steam enthalpy	-	97.0×10^6 KJ/yr
Average mazout energy	-	134.2×10^6 KJ/hr
Boiler efficiency	-	(97.0/134.2) = 72%

Boiler 4

Average flow	-	11:05 a.m.-12:00 p.m.
BFW	-	2.36 ft/sec
Water temp.	-	70°C
Pipe I.D.	-	11.5 cm
Average water flow	-	26.9 ton/hr

MISR
APPENDIX J

RELATIONSHIP BETWEEN PAYBACK AND IRR

A large number of energy efficiency improvement projects involve relatively simple one time investments which require periodic maintenance and repair to keep in operating order and realize the benefits. After all equipment is delivered, implementation time for a large number of energy conservation projects is often on the order of a few weeks or months to half a year. Once implemented, the net cost savings accrue over the economic life of the equipment which is typically 5 to 15 years, depending on the type of equipment.

The company decision to make investments involves a large number of parameters including financial/economic criteria, availability of trained personnel, infrastructural support and so on. Focusing on the financial/economic criteria, the most appropriate criteria would consider the time value of money (used in investments and savings obtained) and the life of the investment. Tools developed for such analyses include net present value (NPV), internal rate of return (IRR), levelized life-cycle cost analyses, etc. However, within the course of the study, we found that most initial feasibility analyses undertaken at the plant level used a simple payback analysis which did not consider the life of the investments. If hurdle rate criteria were not met, then the project was not considered sufficiently viable to bring to the attention of higher levels in plant management.

Because of this, two economic tests were used: payback time (years) and internal rate of return (IRR) in %. We assume an initial investment (INV) at time t-0 with annual net savings (S) accumulating at the end of each year for the life of a project of n years. The time value of money is set at i.

The payout period (P) is equal to investments divided by annual savings: (eq 1)

$$P = INV/S$$

The relationship for internal rate of return is developed from the cash flow C.F. over each year for a project of life n years, involving an initial investment of INV.

$$CF = -INV + S(1+i)^{-1} + S(1+i)^{-2} + \ldots S(1+i)^{-n} \qquad \text{(eq 2)}$$

To derive the internal rate of return we set the cash flow equal to zero in equation 2 and solve for i. The internal rate of return, i, is the rate that equates the present value of an expected future series of even or uneven cash flows to the initial investment.