PN-AAZ-815
56099
3345

PROGRESS REPORT NO. 3

IMPROVED PRODUCER GAS CLEANING SYSTEM

A RESEARCH PROJECT

USAID/PSTC PROGRAM

Grant No. 936-5542-G-00-6050-00

Submitted by

Pojanie Khummongkol

Project Leader

King Mongkut's Institute of Technology Thonburi

Suksawad 48 Bangmod

Rasburana Bangkok 10140

Project Profile

Country	:	Thailand
Grant No.	:	936-5542-G-00-6050-00
Program	:	Program on Science and Technology Cooperation
Project Title	:	Improved Producer Gas Cleaning System
Project Leader	:	Pojanie Khummongkol
Organization	:	King Mongkut's Institute of Technology Thonburi
Co-investigators	:	Damrong Khummongkul
Project Consultants	:	Jaroong Vongavarnroongraung
Authorized Officer	:	Dr.Paibool Hungspreugs
Total Project Budget	:	2,159,300 Bahts
Project Duration	:	October 1986 to September 1988
Reporting Period	:	June to November 1987
Budget Allocation for This Period	:	436,000 Bahts

CONTENTS

Introduction	1
Objectives	2
Method of predicting the performance of the impinger	2
Method of monitoring tar and dust in the producer gas	6
Experimental Results	9
Future Study	11
References	11

Introduction

Agricultural countries, in common, have an enormous quantity of agricultural wastes. These wastes, due to their carbonaceous nature, can be transformed, biologically or chemically, into fuel. An example of biological transformation of carbonaceous waste into fuel is biogas, the process of which has been investigated and used in many countries, particularly in the People's Republic of China. However, the biogas production, like other biological processes, is slow and requires a considerable size of reactor.

In contrast to the biological process, the chemical transformation is fast and needs a smaller reactor. Moreover, some agricultural wastes, such as rice husk, cannot be digested biologically, but can be decomposed thermochemically. The thermochemical decomposition of carbonaceous materials, generally known as gasification, nevertheless, possesses some drawbacks: the gas produced (or producer gas) contains tar and particulates; if they are not removed, they can damage any internal combustion engine fuelled by the gas.

It is the objective of this project to develop a system to clean the gas produced by rice husk gasification. The cleaning system under investigation consists of a cyclone, wet impingers, and a demister. Among these devices,

the impinger is most important, since it works to eliminate tar and fine particles from the producer gas. This report (the third report) outlines the experimental procedure in studying the performance of an impinger. Also mentioned in this report are problems encountered during the period from June to November 1987.

Objectives

The work, performed during the last six months (June-December 1987), had the following objectives:

1) To establish a proper method of monitoring tar and dust in the producer gas.
2) To develop a method that can predict the performance of the impinger.

Method of predicting the performance of the impinger

Since the producer gas contains tar and dust, the performance of the impinger would indicate its ability to remove these impurities. The performance is, thus, measured in terms of two efficiencies: efficiency of tar collection, η_{tar}, and efficiency of dust collection, η_{dust}. They are defined as

$$\eta_{tar} = \frac{\text{Amount of tar removed in the impinger}}{\text{Amount of tar in the inlet gas}} \qquad (1)$$

and

$$\eta_{dust} = \frac{\text{Amount of dust removed in the impinger}}{\text{Amount of dust in the inlet gas}} \quad (2)$$

Rigorous analysis of the impinger would require the knowledge of the Navier-Stokes equations (Schlichting, 1968). The method of solving these equations is very complicated. In order to avoid such difficulties the method of dimensional analysis will be used.

In dimensional analysis, a number of variables thought or believed to affect the operation of the system is first listed. For the system of the impinger, these variables could be:

a) System geometry (see Figure 1): the height of the impinger L, the distance between the nozzle and water surface H_n, the water level H_w, the impinger diameter D_c, and the nozzle diameter D_n.

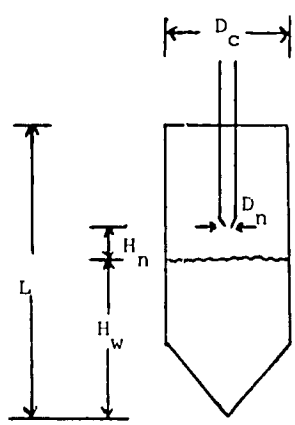

Figure 1 Geometrical configuration of an impinger

b) Fluid properties: the gas density ρ_g, the gas viscosity μ_g, the tar concentration C, the particulate concentration C_p, the liquid density ρ_L, the liquid viscosity μ_l, and the liquid surface tension σ.

c) Flow properties : the gas flow rate Q.

There are 13 variables altogether. However, there are only 3 fundamental units: mass M, length L, and time t. The method of dimensional analysis aims to find a simple relation among the dimensionless groups; there are many methods to achieve such purpose. Nevertheless, the Rayleigh method (Perry and Chilton, 1973) will be adopted here:

$$\eta_{tar} = f(L, H_n, H_w, D_c, D_n, \rho_g, \mu_g, C_t, C_p, \rho_l, \mu_l, \sigma, Q) \qquad (3)$$

Since, in our study, water is the only liquid used to capture tar and dust, the liquid properties can be excluded from the above function. Therefore

$$\eta_{tar} = f(L, H_n, H_w, D_c, D_n, \rho_g, \mu_g, C_t, C_p, Q) \qquad (4)$$

According to the Rayleigh method, (4) is written as

$$\eta_{tar} = A\, L^a H_n^b H_w^c D_c^d D_n^e \rho_g^f \mu_g^n C_t^i C_p^j Q^k \qquad (5)$$

where A is a dimensionless constant.

The corresponding dimensional equation is

$$M^o L^o t^o = (L)^a (L)^b (L)^c (L)^d (L)^e (M/L^3)^f (M/Lt)^h (M/L^3)^i (M/L^3)^j (L^3/t)^k \qquad (6)$$

The condition of dimensional homogeneity gives

$$M \quad : \quad o = f + h + i + j$$

$$L \quad : \quad o = a + b + c + d + e - 3f - h - 3i - 3j + 3k$$

$$t \quad : \quad o = - h - k$$

Solving the above linear algebraic equatins yields

$$\eta_{tar} = A\left(\frac{L\rho_g}{Q\mu_g}\right)^h \left(\frac{H_n}{L}\right)^b \left(\frac{H_w}{L}\right)^c \left(\frac{D_c}{L}\right)^d \left(\frac{D_n}{L}\right)^e \left(\frac{C_t}{\rho_f}\right)^i \left(\frac{C_p}{\rho_f}\right)^j \qquad (7)$$

Rearranging (7),

$$\eta_{tar} = A\left(\frac{Q\rho_g}{D_n\mu_g}\right)^{a_1} \left(\frac{H_n}{L}\right)^{a_2} \left(\frac{H_w}{L}\right)^{a_3} \left(\frac{D_c}{L}\right)^{a_4} \left(\frac{D_n}{L}\right)^{a_5} \left(\frac{C_t}{\rho_f}\right)^{a_6} \left(\frac{C_p}{\rho_f}\right)^{a_7} \qquad (8)$$

Define the Reynolds number Re_n as

$$Re_n = \frac{Q\rho_g}{D_n\mu_g} \qquad (9)$$

In order to reduce the number of variables, we will assume that the concentrations of tar and dust have no effect on the impinger performance. With this assumption, we obtain

$$\eta_{tar} = A\, Re_n^{a_1} \left(\frac{H_n}{L}\right)^{a_2} \left(\frac{H_w}{L}\right)^{a_3} \left(\frac{D_c}{L}\right)^{a_4} \left(\frac{D_n}{L}\right)^{a_5} \qquad (10)$$

Similarly, for the efficiency of dust collection and the pressure drop across the impinger, we obtain

$$\eta_{dust} = B\, Re_n^{b_1} \left(\frac{H_n}{L}\right)^{b_2} \left(\frac{H_w}{L}\right)^{b_3} \left(\frac{D_c}{L}\right)^{b_4} \left(\frac{D_n}{L}\right)^{b_5} \qquad (11)$$

$$E_u = E\, Re_n^{c_1} \left(\frac{H_n}{L}\right)^{c_2} \left(\frac{H_w}{L}\right)^{c_3} \left(\frac{D_c}{L}\right)^{c_4} \left(\frac{D_n}{L}\right)^{c_5} \qquad (12)$$

where B and E are dimensionless constants

$$Eu, \text{ the Euler group } = \Delta p/\rho_g v^2 \qquad (13)$$

The values of A, B, E, a_1, a_2..., a_5, b_1, b_2,...,b_5 c_1, c_2, , c_5. will be determined by the method of multiple linear regression (Walpole and Myers, 1972).

Method of monitoring tar and dust in the producer gas

Monitoring of tar and dust in the producer gas has become a major problem in this project. Various methods have been found in the literature. Eklund and Wanzl (1985) measured tar as the difference between the mass loss of the feed and mass of the gas produced. This method would be suitable for hatch operation in which the mass of the feed could be easily measured at the end of the operation. Chan et al (1985) estimated the amount of tar in terms of water-containing condensables. They found that the major difficulty occurred in quantifying the tar that condensed on the reactor walls before the cold trap. Moreover, the measured value was only a fraction of total tar content because tar is comprised of insoluble and soluble fractions (Duncan, 1981).

In our first attempt to measure tar content, the producer gas was passed into vegetable oil for about ten minutes; precipitation was observed. This method was discarded since both tar and dust captured in the oil could

not be separated. Moreover, the amount of tar and dust was very small as compared with the mass of oil used in the process.

Although our first attempt was not very successful, it, more or less, paved a way for further development. Our second step was to reduce the mass of material utilized to capture the dirt in the gas. This was achieved by using cotton wool. Since the producer gas leaving the cyclone had the temperature about 34 ^{o}C, it could thus pass through the cotton wool without damaging it. With this conjecture, 0.6gm of cotton wool was placed along the leg of a U-tube. The producer gas then entered by one leg, passed through the cotton wool, and leaved by the other leg. In order to increase the amount of tar captured, the U-tube was immersed in an ice bath. The method worked satisfactorily. The separation of tar and dust, nevertheless, could not be achieved.

The next step of development was to devise a method that could separate dust or particulates from the gas prior to removal of tar. Tar is captured by the cotton wool because it condenses. If the producer gas is heated to a temperature higher than the dew point of tar, the condensation could be prevented or reduced when the gas is being filtered. The idea was tried. The producer gas was heated by electric heater to the temperature of about 170-200 ^{o}C, and then passed through a packing of glass wool

(instead of cotton wool), and then through a tube immersed in an ice bath. The particles would be captured in the glass wool, while tar and moisture were condensed in the tube.

The final configuration of the sampling device, resulted from the above development, is illustrated in Figure 2. The producer gas entered the sampling device at A, passed an electric heater B ,was filtered by glass wool packed in pipe C, and was then cooled in a number of U tubes immersed in an ice bath E; the gas flow rate was measured by a rotameter F. The U tubes could be disconnected (Fig. 3) so that the condensed tar or tarry water could then be collected and analysed. In Figure 3, the gas entered the U tubes at D and leaved at E.

Analysis of tar was another major problem in this project. Tar consists of a large number of hydrocarbons. To analyse tar thoroughly would require sophisticated and expensive instruments. Many investigators measured tar by gravimetric method; this would be appropriate if the amount of sample was large. With the continuous process as done in this project, the sample was collected within 5 minutes; thus the amount of the sample was not sufficient for gravimetric analysis. Other methods are thus neeeded. It has been found that the general composition of pyroligneous acid obtained by thermal decomposition of any wood was similar but the relative amounts of any one component varied with species and reaction conditions (Nikitin, 1966). Tar is

composed of mainly carbon. Morita (1980) had performed an elemental analysis of tar obtained from the pyrolysis of peat, he found that 80.1% of tar was carbon and the rest was hydrogen. With these information, we would measure the concentration of tar in the producer gas indirectly in terms of total carbon content.

The total carbon content of tar was analysed by a Total Carbon Analyzer (Model-525 O.I. Corporation, College Station, Texas). The operating procedure was carried out according to the procedure recommended in the instrument manual. The amount of sample needed in the analysis was 20 liter. Prior to the analysis, the calibration or standard curve was prepared by dissolving 2.15 gm of potassium biphthalate in 1 litre of CO_2-free water. This standard solution contains 1 g carbon in 1 liter. Different amounts of the standard solution were injected into the analyzer, which would give the total mass of carbon appearing in the sample.

Experimental Results

Tables 1 and 2 summarize the carbon content in the producer gas entering and leaving the impinger; the size of the nozzle was 7 mm, the column diameter was 30 cm. The water level was 45 cm (in Table 1) and 35 cm (in Table 2). The nozzle was set at various heights from the water surface.

At each condition, six samples were taken; the interval between each sampling was half an hour, and each sampling required 5 minutes collecting time. The pressure drop across the impinger at these conditions was found to vary from 10 to 12 cm of water. The tempeature of the gas leaving the rotameter was found to be 35 ^{o}C.

The tar collection efficiency of the impinger was calculated according to Eq.(1). The maximum efficiency was 90.2% at the water level of 35 cm and the nozzle height of 1 cm and the minimum value was 51.8% at the same level of water and the nozzle height of 3 cm. The variation of the tar collection efficiency apparently resulted from the arrangement of the impinger. This variation could be obtained, using Eq. (10). However, this would be achieved if sufficient data were available.

With particulate collection, we found that the weight of the glass wool increased insignificantly after passing the gas through. We suspected that there might not be any particulates in the gas. To verify this speculation, the sampling line was modified, by replacing the glass wool with glass fiber filter. A vacuum pump was used to increase the gas flow rate The sample was taken for ten minutes and at the flow rate of 3 m^3 /hr. No dust was observed on the filter. This indicated that the gas produced by this system was free of particulates.

Future Study

For the next six months (December 1987-May 1988), the following works will be performed:

1. Studying the performance of the impinger for the nozzle sizes of 7 and 10 mm, the water levels of 45, 35, and 25 cm, the column diameter of 10, 20, and 30 cm, and the nozzle height from the water surface of 1, 3, and 5 cm.

2. Performing the dimensional analysis in order to obtain the correlations between the collection efficiencies and the geometrical parameters.

3. Scaling up the cleaning system.

References

Chan, W.C.R., Kelbon, M., Krieger, B.(1985) "Product Formation in the Pyrolysis of Large Wood Particles", in Fundamentals of Thermochemical Biomass Conversion, Vol. I. R.P. Overend, T.A. Milne, and L.K.Mudge (Eds.). Elsevier Applied Sicence Publishers, London and New York, pp. 219-236.

Duncan, D.W.(1981) "Pyrolysis and Hydropyrolysis of Peat at High Heating Rates", in Fundamentals of Thermochemical Biomass Conversion, Vol.I. R.P. Overend, T.A. Milne, and L.K. Mudge (Eds). Elsevier Applied Science Publishers, London and New York, pp.315-327.

Nikitin, N.I.(1966) in The Chemistry of Cellulose and Wood. Chapter XXV Thermal Decomposition of Wood, pp.570-596. Israel Program for Scientific Translation, Jerusalem.

Morita, H. (1980) "Peat as a Future Source of Organic Raw Materials", Chemistry in Canada, 32(3), 18-19,27.

Perry, R.H., Chilton, C.H.(1973) Chemical Engineers' Handbood, 5th Edition. McGraw-Hill Book Company.

Schlichting, H.(1968) Boundary-Layer Theory. McGraw-Hill Book Company.

Walpole, R.E., Myers, R.H.(1972) Probability and Statistics for Engineers and Scientists. MacMillan Publishing Co., Inc. New York.

Table 1

Efficiency of the impinger with the conditions of:

Nozzle diameter, D_n = 7 mm.

Water level, H_w = 45 cm.

Column diameter, D_c = 30 cm.

Sample No.	gm C/m^3					
	1		3		5	
	In	Out	In	Out	In	Out
1	0.109	0.0317	0.0463	0.0404	0.0858	0.007
2	0.112	0.042	0.0944	0	0.0814	0.0128
3	0.111	0.0380	0.0500	0.008	0.0741	0.0153
4	0.114	0.0487	0.0823	0.008	0.0736	0.0156
5	0.0785	0.0291	0.0608	0	0.0677	0.020
6	0.0823	0.0302	0.0747	0.002	0.0713	0.0146
Average	0.101	0.0366	0.0680	0.001	0.0757	0.0142
η,%	63.8		85.7		81.2	

Table 2

Efficiency of the impinger with the condition of

Nozzle diameter, D_n = 7 mm.

Water level, H_w = 35 mm.

Column diameter, D_c = 30 cm.

Sample No.	gm C/m^3					
	1		3		5	
	In	Out	In	Out	In	Out
1	0.0237	0.007	0.0362	0.0257	0.0941	0.0340
2	0.0775	-	0.0812	0.0946	0.1116	0.0327
3	0.0587	0	0.1110	0.0296	0.120	0.030
4	0.075	0.00231	0.1390	0.0426	0.0984	0.034
5	0.060	0.0151	0.134	0.0334	0.1368	0.0301
6	0.116	0.009	0.1238	0.0756	0.113	0.0447
Average	0.0685	0.0067	0.1042	0.0503	0.1123	0.0343
η, %	90.2		51.8		69.5	

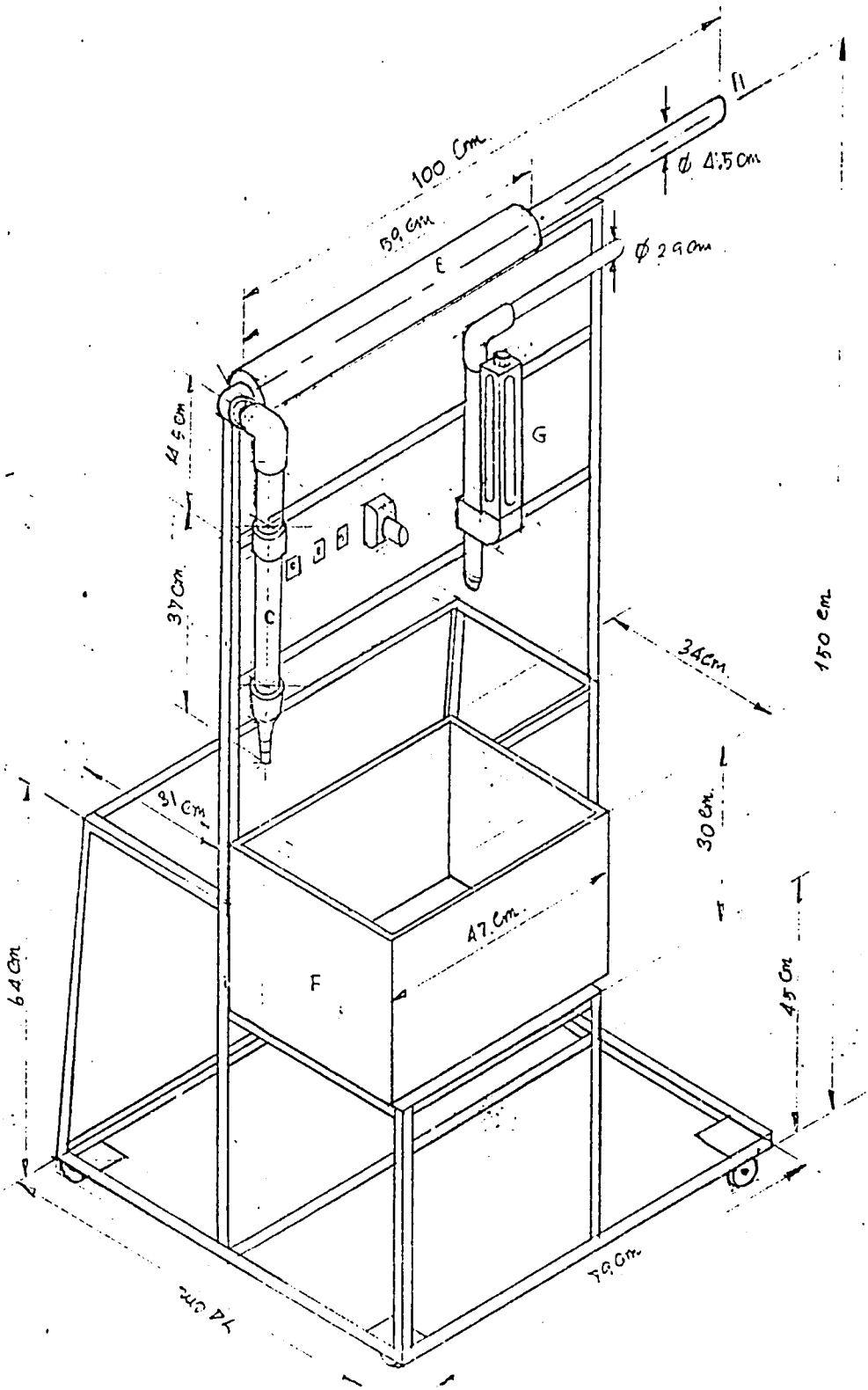

Figure 2 Configuration of the sampling device

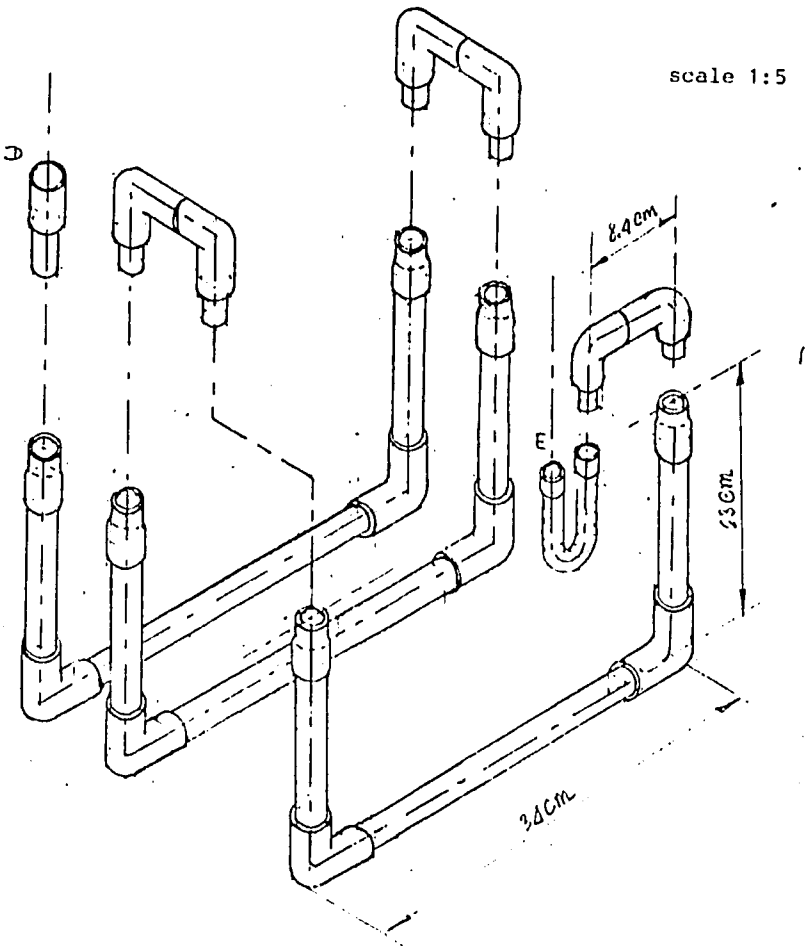

Figure 3 Arrangment of the cooling section in the sampling device