PN-AAZ-770
ISN [illegible]

WATER AND SANITATION
FOR HEALTH PROJECT

Operated by
CDM and Associates

Sponsored by the U.S. Agency
for International Development

1611 N. Kent Street, Room 1002
Arlington, VA 22209-2111 USA

Telephone: (703) 243-8200
Telex No. WUI 64552
Cable Address WASHAID

The WASH Project is managed by Camp Dresser & McKee International Inc. Principal cooperating institutions and subcontractors are: Associates in Rural Development, Inc.; International Science and Technology Institute, Inc.; Research Triangle Institute; Training Resources Group; University of North Carolina At Chapel Hill

THE SELECTION OF DRILLING RIGS FOR RURAL WATER SUPPLY

62

WASH TECHNICAL REPORT NO. 42

APRIL 1988

Prepared for
the Office of Health,
Bureau for Science and Technology
U.S. Agency for International Development
WASH Activity No. 259

WASH TECHNICAL REPORT NO. 42

THE SELECTION OF DRILLING RIGS FOR RURAL WATER SUPPLY

Prepared for the Office of Health, Bureau for Science and Technology
U.S. Agency for International Development
under WASH Activity No. 259

by

Ralph E. Preble
and
Philip Roark

000333
000186
S

April 1988

Water and Sanitation for Health Project
Contract No. 5942-C-00-4085-00, Project No. 936-5942
is sponsored by the Office of Health, Bureau for Science and Technology
U.S. Agency for International Development
Washington, DC 20523

TABLE OF CONTENTS

CHAPTER		Page
	ACKNOWLEDGMENTS	v
	EXECUTIVE SUMMARY	vii
1.	INTRODUCTION	1
2.	GENERAL CONSIDERATIONS IN DRILLING RURAL WELLS	3
	2.1 Accessibility	3
	2.2 Aquifer Characteristics	3
	2.3 Diameters of Wells and Pumps	4
	2.4 Well Depths	5
3.	DRILLING METHODS	7
	3.1 Cable Tool Drilling	7
	3.2 Rotary Drilling Methods	9
	3.2.1 Conventional Rotary Drilling	9
	3.2.2 Rotary Percussion Drilling	10
	3.2.3 Reverse Rotary Drilling	11
4.	PERTINENT DRILLING RIG CONSIDERATIONS	13
	4.1 General Considerations	13
	4.1.1 Introduction	13
	4.1.2 Weight	13
	4.1.3 Truck Considerations	14
	4.1.4 Maintenance and Spare Parts	14
	4.2 Specific Considerations	15
	4.2.1 Procedures Applicable to Overburden Wells	15
	4.2.2 Principles Applicable to Overburden Drilling	16
	4.2.3 Procedures Applicable to Bedrock Wells	19
	4.2.4 Principles Applicable to Rock Drilling	20
	4.3 Summary of Drilling Rig Specifications	23
	4.3.1 Operational Specifications	23
	4.3.2 Equipment Specifications	23
	4.3.3 Basic Auxiliary Equipment	23

TABLE OF CONTENTS (continued)

CHAPTER **Page**

5. ACCESSORY DRILLING EQUIPMENT 25

5.1 General Discussion 25
5.2 Accessories Related to Drilling 26
5.2.1 Accessory Equipment for Overburden Drilling 26
5.2.2 Accessory Equipment for Air Percussion Drilling 28
5.2.3 Basic Accessories for Overburden Drilling and Air Percussion Rock Drilling with Casings Limited to 4-inch (101.6 mm) Diameter 28
5.3 Miscellaneous Equipment 28
5.3.1 Water Tanks 28
5.3.2 Hydrofracturing Equipment 33

6. COMPARISON OF SELECTED DRILLING RIGS 35

7. TRAINING 39

7.1 Formal Driller Training 39
7.2 In-Country Supervision and Training 39

8. CONCLUSIONS 41

BIBLIOGRAPHY 45

APPENDIX

A. Ground Water in Hard Rocks 49
B. Support Vehicle for Drill Rig Crew 55
C. Down-the-hole Drills 61
D. Mud Tank 65
E. Hydrofracturing Pump 69
F. Deep Rock Literature 75
G. Canterra Literature 81
H. Simco Literature 91
I. Failing Literature 101
J. Gus Pech Literature 111
K. Mobile Literature 119
L. Water Well Education 127

TABLE OF CONTENTS (continued)

Page

TABLES

1. Relative Performance of Different Drilling Methods in Various Types of Geologic Formations 8
2. Accessory Equipment for Overburden Drilling 27
3. Accessory Equipment for Air Percussion Drilling 29
4. Basic Accessory Equipment for Wells Completed with Well Screens in Unconsolidated Formations 30
5. Basic Accessory Equipment for Wells Completed in Bedrock by Air Percussion Drilling 31
6. Drilling Fluids for One Lightweight Drill Rig 32
7. Top-Head Drive Drill Rigs with 7,500 lb, or less, Operating Weight 36
8. Top-Head Drive Drill Rigs with Operating Weight over 7,500 lbs ... 37
9. Checklist of Considerations Influencing Drill Rig Selection 42

ACKNOWLEDGMENTS

The authors wish to thank David Grey of the Water and Sanitation Division of the World Bank for his review of this report.

EXECUTIVE SUMMARY

This report considers the conditions under which rural water supplies are typically constructed and provides guidelines on the selection of drilling rigs appropriate for these conditions. Drill rigs of a size larger than necessary for most rural applications have been employed in the past, and this has resulted in unnecessarily high costs and less flexibility in reaching isolated locations. The need to find cost-effective means of providing rural water supplies has resulted in increased emphasis on smaller, light-weight drilling rigs.

The majority of rural water supply projects can be expected to rely on wells equipped with handpumps or other pumps of relatively low capacity. Wells yielding about 10 m^3/day, constructed with 4 to 6 inch PVC casing, and about 30 meters average depth will satisfy most village needs in developing countries. Drill rigs will usually need both a rotary capability, to handle soft overburden materials, and an air percussion capability, to penetrate hard rock. Light-weight mobility is needed in drill rigs to traverse difficult terrain.

The key selection criteria for drill rigs include the following:

- capable of drilling to 75 meters (250 feet)
- boreholes for 4 to 6 inch casing
- both rotary and air percussion capability
- light weight
- low cost.

Success in rural water supply programs can be enhanced by proper selection of cost-effective drilling equipment. These guidelines are addressed to project designers and managers in drill rig selection and procurement. Examples of specific drill rig models are given, along with accessory drilling equipment, with a discussion of their relative merits. In addition to the technical components of rural water development, emphasis must also be placed on community organization and health education to assure full benefits of water supply to rural inhabitants.

Chapter 1

INTRODUCTION

A changing emphasis in rural water well construction within developing countries has occurred in the last two decades. Traditionally, wells have been constructed by hand digging and the resulting well diameters were necessarily large, usually greater than 1.5 meters. Modern hand-dug wells have been concrete-lined and in many cases capped to reduce contamination. In order to avoid the possibility of reduced water supplies during droughts in relatively shallow hand-dug wells, more emphasis has been placed on drilled wells which penetrate deep into aquifers. Both large-diameter capped wells and small-diameter drilled wells require a pumping device, usually a handpump. Problems associated with the operation and maintenance of handpumps, however, has led to generally unsatisfactory results in many projects.

In more recent years, technical improvements in handpumps and institutional improvements in operations and maintenance of systems have generated more confidence in handpumps. Today's handpumps tend to be more robust to withstand heavy community use and can be maintained at the local level. Some handpumps can be manufactured locally, which relieves the problem of importing spare parts. With improved performance of handpumps the construction of wells through drilling has become less problematic. Compared to hand-dug wells, drilled wells are faster to construct and are more reliable because of increased depths. These are important considerations to water development planners which, along with the improved pumps, have led planners to place major emphasis on drilled water wells.

The expected drop in cost of drilling new wells has not occurred, however. One reason for this is that a significant portion of the construction cost lies in the purchase price of drilling rigs. The delivered price of a fully equipped medium-sized rotary drilling rig, such as those found in water development projects surveyed in Africa, can reach $500,000 or more. In addition, the larger drilling rigs with complex technical and mechanical components often proved to be beyond the capabilities of the operators, mechanics, and logistic support staff to efficiently use and maintain them. This resulted in low production and consequently high amortized costs per well. Because of such high costs development specialists and some manufacturers are putting more emphasis on smaller drilling rigs that are better suited to the needs and conditions of rural water development. If the water needs of rural inhabitants in developing countries are to be met, more emphasis in the future will necessarily be placed on cost-effective water drilling projects.

The purpose of this report is to describe typical conditions under which rural water systems are constructed and to describe selected drilling rigs which are appropriate for those conditions. It is expected that international development agencies, government water development agencies, and private sector drilling contractors engaged in rural water supply projects will find the information useful. The guidelines are addressed to project designers and managers who are involved in drill rig selection and procurement.

The information contained in this report represents the personal experience of the authors, the cumulative experience of the WASH project, and personal communication with other international agencies and organizations. Specific reference is made to particular manufacturers of drilling rigs and related equipment. These references are not meant to endorse particular products, nor to cover all possible equipment, but rather to be used as examples. Further, most of the products mentioned are of U.S. manufacture, but equipment of non-U.S. origin may be equally suitable in many instances.

Chapter 2

GENERAL CONSIDERATIONS IN DRILLING RURAL WELLS

The conditions under which rural water projects in developing countries are carried out vary widely. They can, however, be generalized to consider the appropriateness of particular drilling rigs. Factors common to water supply projects include the accessibility of proposed drilling sites, aquifer characteristics and yields, and well diameters and depths.

2.1 Accessibility

Most rural well-drilling projects are located long distances from urban centers and are often in areas where access is difficult. Roads are often poor or even nonexistent. Moving heavy equipment into such areas can be a very difficult undertaking. Oversized drilling equipment is clearly not effective under such conditions and represents a drain on limited resources.

The purpose of rural water projects is to provide clean and easily accessible water to the village. It is important to place the well as close to the village center as possible in order to minimize the distance that people must travel to collect the water. Often, this means moving the rig to locations which are some distance from existing roads or trails.

In remote locations, a great amount of accessory materials and equipment must accompany the rig. Crews are often expected to stay in the field for weeks at a time. Such items as fuel and water for the drilling operations, casing and pumps for the well, and food and camping equipment for the crew must be transported to the site.

2.2 Aquifer Characteristics

Water-bearing formations vary considerably worldwide. For example, wells drilled in the alluvial deposits of the Indus or Ganges basins call for methods different from those appropriate to the hard metamorphic and crystalline rock areas of Africa. About 90 percent of the village wells in Uganda are begun in weathered basement material and completed in bedrock. Conditions can also vary widely within a single small country. In El Salvador, potential groundwater development varies from coastal plain alluviums to a variety of crystalline rocks, metamorphic rocks, and rocks composed of pyroclastic materials. In most countries drilling conditions will necessitate a choice of drilling equipment that is capable of efficiently installing wells in both unconsolidated sands and gravels as well as hard bedrock.

Aquifers also vary considerably and are often low in yield. For village water supply purposes, yields of as little as 10 m^3/day are sufficient to meet the minimal needs of small villages of about 250 people. This yield is the capacity of typical handpumps when used at depths of less than 30 meters.

In areas where yields are low, aquifers or water-bearing zones are often difficult to locate. Repeated drilling attempts may be necessary at a particular site. This is especially true when drilling in bedrock where wells are located through fracture trace analysis or in other formations where adequate geophysical techniques are not available. To keep total operational expenses at a minimum, low-cost, very mobile drilling equipment is needed at such sites.

2.3 Diameters of Wells and Pumps

The selection of an appropriate well diameter for any drilling program is largely dependent upon the pump to be installed. Some rural well drilling programs, in addition to drilling village wells to be equipped with handpumps, include communities where larger wells are necessary to accommodate power-driven pumps. However, the great majority of wells in a rural well program will be equipped with handpumps. Handpumps are produced in a variety of different designs. Most handpumps are designed to lift or force water through a "drop pipe," commonly referred to as a "column pipe," to the ground surface. Where the water is at a shallow depth, normally less than six meters below ground, suction handpumps are capable of lifting water by vacuum created by an above-ground piston in the pump body. Such pumps are normally attached to small-diameter wells of 1-1/4 to 2 inch (31.75 to 51.8 mm) diameter or large-diameter hand-dug wells. Small-diameter wells are commonly installed by methods other than motorized drilling rig.

In wells with a water level depth greater than 20 feet, the pump piston, or pump body of an alternate design, must be located below the water level. Such pump bodies normally range from 2-1/2 to 3 inches (63.5 to 76.2 mm) in outside diameter (OD) but some are smaller. Typically, development organizations have designed village wells to be cased with 5 or 6 inch (127 to 152.4 mm) inside diameter (ID) pipe sealed into bedrock with the drilling in rock completed with 4 or 4-1/2 inch (101.6 to 114.3 mm) bits. Other organizations with limited means, such as private voluntary organizations (PVOs), generally have relied upon 4 inch (101.6 mm) ID casing and 3-1/2 inch (88.9 mm) drill bits primarily due to the capital cost of equipment necessary to drill the larger boreholes. Small powered pumps are normally of 3-1/2 or 3-5/8 inch (88.9 or 92.1 mm) diameter and require casing of at least 4 inch (101.6 mm) diameter.

Generally, the design diameter of wells is determined by the quantity of water to be extracted, the necessary diameter being that which will permit setting a pump to achieve this extraction rate. The potential upper limit for a 4 inch (101.6 mm) well is about 300 to 350 gpm (19 to 22.1 l/s). The downhole piston of a handpump dictates the 4 inch (101.6 mm) size where water levels do not permit a handpump design that incorporates the piston in the pump chamber. The lower limit of acceptability for handpumps is based on user demand. Pumps which cannot achieve a pumping rate of at least 5 gpm (19 l/m) are considered unacceptable.

Borehole diameters must obviously be adequate to allow entrance of the well casing and screens (unless the well is completed "open hole" in stable rock formation). In addition, the size of the annular space (distance between the well casing and borehole wall) needs to be considered. The National Water

Well Association (NWWA) Standard for Deep Wells[4] recommends a cement grout of at least 1-1/2 inch (38.1 mm) thickness. If this recommendation were to be adopted all 4-inch (101.6 mm) wells would be 7-1/2 inches (190.5 mm) in diameter in overburden materials and extend at least 10 feet (3.05 m) deep into bedrock for rock wells (another NWWA recommendation).

Many local methods of well installations employed in the developing countries neglect any form of seal between the casing and the borehole wall. Thousands of wells in Bangladesh were checked for fecal contamination between 1964 and 1974 under a USAID advisory assistance program and, invariably, problem wells were those in which contaminated water had been introduced into the well by the users.

In some formations a filter pack (gravel pack) is needed. The geologic conditions, availability of suitable filter pack materials, drilling method, and type of screen determine whether a filter pack is required. The minimum practical thickness for a filter pack is 3 inches (76 mm) thus, 7-1/2 inch (190.5 mm) boreholes equipped with 4-1/2 inch (114.3 mm) OD screen are appropriate.

For purposes of this report, borehole diameters of 7-1/2 inch (190.5 mm) for overburden wells, 5-1/2 inch (139.7 mm) to seat casing into bedrock with 3-9/16 inch (90.5 mm) in the bedrock itself are recommended for wells intended for handpump installations. Casing and screen of 4-inch ID are recommended in these wells. In later chapters, 10-inch (25.4 mm) boreholes in overburden aquifers are also discussed. The larger diameter is necessary to accommodate powered-pump installation of 100 gpm (6.2 l/s) capacity, or more, when higher yields are required for villages with greater water demand.

2.4 Well Depths

Within the developing world there is a vast range of geologic conditions in which water may be found. Groundwater may occur, for example, in many parts of Bangladesh, within inches of the surface, or as deep as many thousands of feet in the Sierra Madre province of Mexico. In some locations throughout the world, groundwater at a specific location may not be found at any depth. Fortunately, in most areas of the world, groundwater is available in adequate quantities for small rural village needs at depths less than 60 meters (200 feet). The median pumping lift for rural water supply wells worldwide is 12 meters (40 feet) with 90 percent of pumping depths less than 30 meters (100 feet).

Even in areas underlain by hard rock, such as crystalline granites or gneisses, water is often available in the weathered or fractured zone above the bedrock in limited quantities at modest depths. Appendix A provides some selected worldwide examples of depths and water yields in hard rocks.

For the purposes of this report, a maximum depth of 75 meters (250 feet) is recommended as an appropriate specification to which drilling rigs designed for village water supply should be capable of reaching.

Chapter 3

DRILLING METHODS

Geologic conditions are usually the most important factor in determining the type of drilling rig and method of drilling for a specific program. The relative performance of various methods of drilling in different types of formations have been rated by Driscoll[13] as shown in Table 1. While Table 1 lists several methods of drilling, three are most suitable for rural water supply projects-- able tool, rotary, and reverse rotary. In the following subsections, each method is briefly described and its advantages listed.

3.1 Cable Tool Drilling

Modern tools used in cable tool drilling are stronger and heavier than those used a century ago, but the drilling rigs have changed little since internal combustion engines replaced steam power in this century. Drilling is accomplished by lifting and dropping a string of tools (bit, drill stem, jars and swivel socket) suspended on a cable. Steel casing is driven down at periodic intervals as the borehole is advanced. Bit cuttings are also periodically removed from the borehole by a bailer.

When well production rate is not a critical factor, cable tool rigs have merit in many instances. They offer versatility in operating in all types of formations and their relatively low purchase price and operating costs are attractive. Where soft geologic formations dominate, labor costs are low, and skilled mechanics are in short supply, then cable tools should be considered.

The major advantages of the cable tool method of drilling in relationship to other drilling methods are:

1. Lower initial equipment costs (although some very light-weight rotary drills are comparable in price)
2. Low operating costs
3. Ease of repair due to simple and rugged rig design
4. Minimal or no water requirements for drilling
5. Versatile to operate in all geologic conditions
6. Less difficulty with loose cobbles or boulders than most drilling methods
7. Ability to drill, develop, and test pump with same rig
8. Easy access to sampling of water levels and water quality.

Table 1. **Relative Performance of Different Drilling Methods in Various Types of Geologic Formations**

Type of Formation	Cable Tool	Direct Rotary (with fluids)	Direct Rotary (with air)	Direct Rotary (Down-the-hole air hammer)	Direct Rotary (Drill-through casing hammer)	Reverse Rotary (with fluids)	Reverse Rotary (Dual Wall)	Hydraulic Percussion	Jetting	Driven	Auger
Dune sand	2	5	Not recommended	Not recommended	Not applicable	5*	6	5	5	3	1
Loose sand and gravel	2	5				5*	6	5	5	3	1
Quicksand	2	5				5*	6	5	5	3	1
Loose boulders in alluvial fans or glacial drift	3-2	2-1				2-1	4	1	1		1
Clay and silt	3	5				5	5	3	3		3
Firm shale	5	5				5	5	3			2
Sticky shale	3	5				3	5	3			2
Brittle shale	5	5				5	5	3			
Sandstone—poorly cemented	3	4				4	5	4			
Sandstone—well cemented	3	3				3	5	3			
Chert nodules	5	3				3	3	5			
Limestone	5	5		6		5	5	5			
Limestone with chert nodules	5	3		6		3	3	5			
Limestone with small cracks or fractures	5	3		6		2	5	5			
Limestone, cavernous	5	3-1		5		1	5	1			
Dolomite	5	5		6		5	5	5			
Basalts, thin layers in sedimentary rocks	5	3		6		3	5	5			
Basalts—thick layers	3	3		5		3	4	3			
Basalts—highly fractured (lost circulation zones)	3	1		3		1	4	1			
Metamorphic rocks	3	3		5		3	4	3			
Granite	3	3		5		3	4	3			

*Assuming sufficient hydrostatic pressure is available to contain active sand (under high confining pressures)

Rate of Penetration:
1 Impossible
2 Difficult
3 Slow
4 Medium
5 Rapid
6 Very rapid

Reprinted by permission of the author: Driscoll[13].

The major disadvantages of the cable tool method are:

1. Limited penetration rate (although for some formations it is relatively rapid if wells are shallow)

2. The need to drive casing requires heavy steel pipe which adds to transport and handling problems and offsets, to a degree, other potential economies.

3. Frequent drill-line failures

4. Temporary casing required in unconsolidated materials.

Most references list limited depth capability as a disadvantage of the cable tool method but, for rural drilling programs where depths do not exceed 200 feet, this would not be a problem. The significantly slower penetration rate, however, is a disadvantage except possibly for small-scale programs with no time limits or production goals. In the experience of the authors, the penetration rates shown in Table 1 are possibly overestimated, particularly when drilling in very hard metamorphic and crystalline rocks or when wells become rather deep. A theoretical production rate indicated by Larsson[16] suggests that cable tool drilling can construct 20-40 wells/year as compared to 150-175 wells/year by rotary/percussion drilling based on 200-foot (60 m) deep wells and a 220-day working year. The actual production rate for either method is usually much less in developing countries because of problems in logistics, support services, and management. Whenever speed is considered important, and it should be whenever cost effectiveness is an issue, then cable tool rigs are not generally recommended.

3.2 Rotary Drilling Methods

3.2.1 Conventional Rotary Drilling

Conventional rotary drilling is a method of boring a hole by using a rotating bit to which a downward force is applied by a hollow drill stem or rods. The hollow drill rods conveys a drilling fluid (in recent years air has also been utilized) to the bit for moving the cuttings to the surface in the annular space between the drill rods and the sides of the borehole.

Bentonite (a clay material) or polymers are added to the drilling fluid to provide stability to the walls of the borehole and prevent them from collapsing. In some areas the natural clays in the formation provide sufficient stability. Such drilling is referred to as open-hole drilling and well completion is accomplished in unconsolidated aquifers by the insertion of a casing to which a well screen is attached. Depending upon the formation in which the well screen is set the formation may be allowed to collapse around the well screen. More commonly, the annular space between the borehole walls and screen is filled with gravel (filter pack).

The rotary method of drilling is relatively rapid and one or two shallow wells per day can be installed, assuming the distance between wells is not great. This method is also used, with differently designed drill bits, to drill weathered bedrock wells where the overlying unconsolidated materials are found to be poor aquifers.

Various PVOs have, in recent years, purchased and employed very light-weight drilling rigs to complete wells in both unconsolidated overburden aquifers and bedrock aquifers by conventional rotary methods. However, major rural water supply programs funded by UNICEF and various international government agencies have preferred down-the-hole hammer drilling when a major part of the program involved wells completed in hard rock aquifers.

3.2.2 Rotary Percussion Drilling

In rotary percussion drilling a down-the-hole hammer, activated by air from an air compressor, is used. This method was developed from the conventional fluid rotary method, and drill rigs are capable of drilling by either means if a fluid circulating pump and appropriate auxiliary equipment are available.

Larsson[16] lists the advantages of the rotary percussion method as follows:

1. High penetration rate
2. Excellent depth capability
3. Good control of fluid flows
4. Combination drilling (unconsolidated and consolidated formations)
5. No special circulation monitor required unless special additives are used
6. Minimum damage to water-bearing zones
7. Quick set-up time for rig
8. Good samples recovered and effective identification of water-bearing zones.

The major disadvantages listed are:

1. Medium to high equipment cost
2. Medium to high operating costs
3. Medium transportation costs--heavy-duty, truck-mounted rig plus compressor
4. Need for experienced drilling personnel.

The problem of heavy, truck-mounted rigs has been lessened in recent years. A number of manufacturers such as Deep Rock, Canterra, and the Swedish manufactured WellDrill (now owned by Atlas Copco) are producing very light-weight trailer-mounted rigs which can combine both conventional fluid rotary and down-the-hole hammer capability. Major manufacturers are also marketing somewhat larger trailer-mounted rigs with similar but somewhat greater borehole diameter and depth capabilities. The drilling methods which presently offer the most advantages for rural well drilling programs are conventional rotary drilling in unconsolidated aquifers and down-the-hole hammer drilling in bedrock aquifers with drilling rigs that can efficiently drill by either method.

3.2.3 Reverse Rotary Drilling

Reverse rotary drilling is a method of well construction that is commonly used for large-diameter, high production wells in unconsolidated aquifers which are generally free of large cobbles and boulders. The well rig acts as a vertical dredge with the drilling fluid, normally water without additives, and cuttings being drawn up through the drill stem. It is an open-hole form of drilling dependent on maintaining a liquid level in the open hole of 10 feet (3 m) or more above that which is naturally present. To accomplish this a reliable source of water, to compensate that lost to the formation being drilled, is needed. The amount of makeup water needed can range from 20 to 500 gpm (1.26 to 31.5 l/s).

In past years, a 6-inch (183 mm) flanged drill stem was most often employed with either a pump or air lift creating an up-stem velocity, according to Driscoll[13], of at least 1.5 ft/sec (0.76 m/sec). Such drill stems limited borehole diameters to 18 inches (457 mm) or larger, so downhole return flow could be kept under 1 ft/sec (0.305 m/sec) to prevent side hole erosion. In the 1960s Bengali and Thai well drillers were utilizing standard 3- and 4-inch (76 and 102 mm) threaded and coupled pipe for reverse rotary drill stems and drilling 12-inch (305 mm) boreholes with locally fabricated rigs. Most new drill stems are now threaded and coupled to reduce the labor of making connections.

Driscoll[13] notes that an adaptation of reverse rotary drilling using top head drive rigs and air for lifting cuttings is called an In-Verse system. Another adaptation of reverse rotary drilling is a dual wall method. With this system a special steel inner tube, connected with sleeves and O-rings, is enclosed within flush joint screwed pipe. Drill pipe diameters range from 3-1/2 to 9-5/8 inches (89 to 244 mm) and drilling is done by either tri-cone or down-the-hole hammer bits. With this method drill cuttings travel up in the inner tube and return flow is between the tube and the outer drill pipe.

Advantages of reverse rotary drilling are:

1. It is a relatively inexpensive method of drilling large diameter boreholes in soft unconsolidated sediments.

2. Relatively reliable samples of formation can be obtained as cuttings do not come in contact with the sides of the borehole in their ascent.

3. The drilling fluid is normally clear water, so adequate well development is not difficult to achieve.

Disadvantages of reverse rotary drilling are the following:

1. It cannot be used if the static water level is too high (although in Pakistan a mound is built to raise the rig).

2. Relatively large amounts of makeup (supplemental) water are necessary.

3. Stiff clay, shale, or boulders present problems that are impossible to handle.

4. It is not normally suitable for drilling in consolidated rock formations.

5. Rapid penetration makes the depth from which sample is obtained difficult to judge.

6. Samples often do not contain fines because of being washed in collection process.

The dual well reverse rotary method was introduced to water well projects in recent years from the oil and mineral industry. The advantages of drilling large-diameter wells in unconsolidated formations are offset by high costs and weight. Augers are four to five times the cost and at least twice the weight of conventional rotary drill stems. Thus, it is considered an unattractive option for most rural well programs.

Chapter 4

PERTINENT DRILLING RIG CONSIDERATIONS

4.1 General Considerations

4.1.1 Introduction

After considering the geologic conditions and appropriate drilling methods described in the preceding chapters, the specific character of drilling equipment and the inherent limitations involved must be examined. General considerations include weight of the equipment and the related capacities of trucks to move the equipment. Spare parts and maintenance are also important considerations. More specific requirements relate to the actual drilling under bedrock and overburden conditions. These subjects are discussed in the following paragraphs.

4.1.2 Weight

As discussed in Chapter 3, most drilling conditions will require a drilling rig that can combine the operations of conventional fluid rotary and down-the-hole air hammer capability. Such rigs may be either trailer-mounted or truck-mounted. The choice of the most suitable mount must consider total weight and also weight distribution of the rig and its accessory equipment. Weight is a factor both in negotiating difficult terrain where steep inclines and bridges with limiting capacities are present, and in selecting trucks with sufficient power to haul or pull the required equipment.

Selection of equipment is sometimes a complex problem requiring trade-offs between alternatives. For example, some references suggest a probable maximum torque requirement of 2,000 foot-pounds for down-the-hole hammers in hard rock drilling. While this requirement is true, it fails to recognize the need to drill through an unconsolidated layer to reach the bedrock in a majority of instances. Also, rock drilling torque provides more uniform rotation and generally better production. Torque and weight are, to a degree, interrelated as power is required to generate torque and this power is responsible for added weight. Mud pumps of adequate capacity also require power. These factors can add 50 percent or more to the needed horsepower to be built into the unit, and added horsepower translates into added weight.

Weight also enters into the matter of transporting equipment. If a trailer-mounted rig cannot be pulled by a pick-up truck, it is probably more efficient to mount it on a heavier truck. If, however, the weight of the truck then exceeds the capacity of the bridges in the area, alternative routes or sites must be considered.

While many development organizations rely upon a fleet of mini pick-ups (normal towing capacity in the 2,000 to 3,500 pound [900 to 1,600 kg] range) these are not sufficient for most drilling operations. As a general criterion, a maximum axle weight in a range of 5,000 to 6,000 pounds (2,300 to 2,700 kg) is required.

4.1.3 Truck Considerations

Within most operations, the combined weight of truck and drilling equipment exceeds 6,000 pounds (2,700 kg), and, except for the very light-weight rigs with separate trailer-mounted air compressors, rules out truck-mounted drilling rigs. The adopted maximum single axle loading, with a 12,000-pound (5,000 kg) rig trailer, is in excess of the rated trailer hauling capacity of the four-wheel-drive Chevrolet V-20 (or equivalent GMC) with a trailer hauling package or the four-wheel-drive GMC Jimmy V-15 which might be considered for somewhat lighter equipment. However, the Ford F-250 HD with its Caterpillar-built 168 H.P., 420 cu.in. diesel, as compared to a General Motors 130 H.P., 379 cu.in., and up to 14,000-pound (or greater) GWCR* would be a wiser choice for towing weights in the 10,000-pound to 12,000-pound range.

In any event, the aim is to minimize the single axle load for towing truck and trailer-mounted rig and standardize on two identical pickup body trucks to provide full moving capability for the drilling team and its equipment. Specifications and manufacturer's description for this truck are reproduced in Appendix B. Other truck models may be competitive price-wise and offer other advantages when towing weights are less than 8,000 pounds 3,600 kg), but advantages of leaving drill rods on the rig would give preference to Ford even with drill rigs in the 7,000-pound (3,200 kg) weight range.

4.1.4 Maintenance and Spare Parts

Rig manufacturers and well-managed drilling organizations would like to see a general minor maintenance check after 50 hours of operation and an overhaul after 2,000 hours. In addition to the drilling crew handling minor maintenance on a day-by-day basis, it is desirable, but seldom followed, to have a shop check after the completion of a program in one geographic area. However, this might mean 3 weeks or longer before anyone, other than operating personnel, checks the condition of the equipment. Manufacturers' recommendations vary, and, while circumstances may not permit strict compliance, responsible field personnel need to be instructed and repeatedly reminded that daily and periodic field maintenance procedures cannot be neglected. Scheduled oil changes, lubrication, etc., are as important as filling the fuel tank.

* GWCR is "gross weight combined rating." This refers to combined truck cargo and trailer weight. While Ford only rates the F-250 HP diesel at 10,000 pounds, it has substantially greater capability than other options. It is usable with up to 12,000-pound trailers.

The influence of standardization, repairs, maintenance and spare parts for past UNICEF procurement was discussed in a World Water[6] article. Most U.S. drilling firms are not overly concerned about standardization of a drilling rig. Replacement parts are readily and quickly available through air shipment. Rig preference appears to be based on evidence, personal or otherwise, of rig reliability and the ability to do the job for which it was intended. These considerations have generally lead to the selection of oversized equipment. This is not necessarily the case for very light-weight drilling equipment such as that manufactured by Deep Rock or the rigs by the Swedish firm Deepwell which have had a market with PVOs for some years. Just because a country may presently operate large equipment manufactured by Ingersoll-Rand, Failing, or others, is no reason to select lighter-weight equipment by these manufacturers for a rural well drilling program when equipment by another manufacturer will do the job more efficiently at lower overall cost.

Supplies need to be ordered for drilling programs in developing countries well in advance of actual need. Spare parts which are most frequently needed should be ordered in volume on an annual basis, as several months are often required for delivery. Savings by shipping via ocean freight are usually quite significant. While most spare parts for drill rigs will probably not be available locally, it is important to be aware of those which are available either locally or from regional distributors.

Overstocking of spare parts or materials should also be avoided, as warehouse rentals add to project costs. Proper inventory control, which provides signals to project managers when important spares are in low supply, is essential. It will always be necessary to provide emergency spare parts for unanticipated breakdowns, and a budget for air freight is therefore needed. The key to cost-effective operation of drill rigs is to keep them in operation and avoid long delays for repairs.

4.2 Specific Considerations

The discussion above has described a light-weight, trailer-mounted, well drilling rig with both fluid rotary and down-the-hole hammer drilling capability as being the best choice for most rural well programs. Trucks to move the equipment, tools, and supplies are also needed. Before discussing accessory items and comparing different manufacturers' equipment, certain specifics of operation and operational limitations of the drilling and accessory equipment need to be examined. The procedures and principles discussed in the following subsections are directly related to the evaluation and comparison of the standard features and optional equipment offered by different manufacturers.

4.2.1 Procedures Applicable to Overburden Wells

Wells completed in permeable overburden aquifers may not need to be installed with the equipment described herein. Shallow overburden wells may be more efficiently installed by local hand drilling methods or by utilizing cable tool equipment. Such wells may need a gravel pack to surround a well screen.

Low-capacity wells, for handpump installation, are generally installed without gravel packs in the Indus and Ganges alluvial deposits as well as elsewhere. Generally, gravel packs are recommended in alluvial materials particularly with higher capacity wells. For drilling of overburden wells the following conditions and approach are anticipated:

- Where wells are to be installed with fluid rotary equipment the use of a drilling fluid made with degradable polymers should be considered to simplify well development.

- Drilling with drag bits would normally be practiced.

- Drag bits in a variety of sizes up to 10 inches (25.4 mm) should be provided to accommodate installation of surface seals and/or gravel pack well construction where needed.

- Well casings and well screens should be PVC materials in a 4 inch (101.6 mm) ID size where the pump cylinder is to be set in the well casing, and a smaller size where water table conditions allow for a pump with the cylinder incorporated into the above-ground pump housing.

- Flush joint PVC casing and screen with cut threads for screw-together joining is recommended. Solvent cement socket joints are also acceptable for shallow wells.

- Local fabrication of PVC well screens is possible in some countries. Generally, local extruded and horizontally slotted PVC is acceptable. Local manufacture of continuously slotted ribbed pipe is also possible for particular purposes as described in Report on Broached Roboscreen (Sternberg and Knight[27]). Drilling projects should, however, rely on standard manufactured screens until local pipe cutting facilities are fully operational.

4.2.2 Principles Applicable to Overburden Drilling

With the type of drilling equipment under discussion, drilling for the purpose of completing a well in permeable overburden material is anticipated to be done through use of a fluid flush method. It is expected that both roller bits and drag bits will be utilized in such operations. To be effective, roller bits require considerably more weight to be applied to the bit, as discussed in Subsection 4.2.4, than do drag bits. Drag bits are capable of excellent penetration rates but require considerably more torque to operate successfully.

Adequate torque for drag bits is considered to be 200 foot pounds (ft lb) per inch by bit diameter (27.75 kg-m). A greater torque capability is probably desirable but excess torque should not be a major selection factor and equipment operation can be successful where the capability is less than quoted. On the basis of the figure quoted torque requirements would be as follows:

- 1,500 ft lb (208 kg-m) for 7.5 inch (190.5 mm) drag bits
- 2,000 ft lb (277 kg-m) for 10 inch (254 mm) drag bits

Rotation speed for drag bits is generally suggested to be between 100 and 200 rpm and somewhat higher for roller bits. In practice rotation normally does not exceed 100-110 rpm but rotation of roller bits, operated in unconsolidated materials, might be turned at 150 rpm or even higher by some operators. Successful drillers are ones who, through experience, possess the judgment to maintain a proper balance (combination) of rotation speed and weight on the bit. This judgment depends on being thoroughly familiar with the equipment being operated and paying careful attention to its sounds, vibrations, and general progress.

Fluid circulation pumps are rated according to the amount of fluid they will deliver at a certain head (pressure). Pumps capable of producing an up-hole velocity of 80 to 90 ft/min (40.6 to 45.7 cm/sec) should be adequate for drilling unconsolidated formations with drilling muds or polymers. A higher velocity might be desirable if drilling is in rock with a high specific gravity or if the rock particles to be flushed are large. This requirement might be 20 percent less under good drilling conditions without circulation losses.

To determine pump capacity the relationship between the size of the borehole, the size of the drill pipe, and pump delivery must be assessed so that a workable combination is achieved. This relationship is approximately expressed by the following formula:

$$Q = \frac{V\,(D^2-d^2)}{25}$$

Where: Q = pump discharge in gpm (gallons per minute)

V = up-hole velocity in ft/min (feet per minute)

D = borehole diameter in inches

d = drill pipe size (outside diameter) in inches

25 = a constant normally used for the units employed (24.46 an actual figure)

This relationship is illustrated by reference to the following table where pump discharge values in gpm and lps (liters per second) have been calculated so that a 90 ft/min (457 mm/sec) up-hole velocity is maintained.

Relationship[a] Pump Capacity, Borehole and Drill Pipe

Borehole Diameter in inches/mm			
6.75	7.5/190.5	8.5/216	10/254
pump capacity in gpm/lps for 2-3/8 inch (60.3 mm) drill pipe			
144/9.1	182/11.9	240/15.0	340/21.5[b]
pump capacity in gpm/lps for 2-7/8 inch (73.0 mm) drill pipe			
134/8.5	173/10.9	230/14.5	330/20.9[b]
pump capacity in gpm/lps for 3-1/2 inch (88.9 mm) drill pipe			
120/7.6	158/10.0	216/13.6	316/19.9[b]

[a] With a constant up-hole velocity maintained at 90 ft/min (457 mm/sec)

[b] Pressure (friction) loss in drill pipe with standard API tool joints is extremely high--need to check drill pipe with lower friction

Inspection of the above table shows that a 240 gpm (15.1 lps) pump would be necessary to drill a 8-1/2 inch (216 mm) borehole with a 2-3/8 inch (60.3 mm) drill pipe. However, the pressure loss in pushing this amount of fluid through 100 feet (30.5 m) of drill pipe would be approximately 90 psi (6 bar). To drill 8-1/2 inch boreholes in unconsolidated material to depths greater than 50 feet (15 m) will require larger drill stems to reduce friction loss (pressure loss). However, the use of large drill pipe and small pumps is not likely to be practical as well diameters are increased above 8-1/2 inches. Neglecting pump discharge pressure, the problem of calculating a theoretical drill pipe size for drilling a 12 inch (304 mm) borehole utilizing a 240 gpm pump would be solved as follows:

$$d^2 = \frac{VD^2 - 25Q}{V}$$

With units as described on page 17:

- This would be an impractical 8.8 in. (223 mm) drill pipe size for the problem stated

- For a pump with a 340 gpm discharge, a 7 inch (177 mm) drill size is required

- However, for a 10 inch (254 mm) drill hole a 2-3/8 (60.3 mm) drill pipe could be used if depth and resultant head loss was not to great. A 3-1/2 inch drill pipe would leave insufficient room for cuttings to pass in a 4 inch casing, a 4-1/2 inch (114.3 mm) drill pipe would be appropriate but, if used, in addition to unconsolidated drilling, with an air percussion hammer for bedrock drilling would necessitate use of 6 inch casing.

4.2.3 Procedures Applicable to Bedrock Wells

While different well drillers may employ different methods to advance a drill hole through the overburden before drilling into a rock aquifer, the following conditions and approach are anticipated as being appropriate for drilling with the very light weight drill rigs (identified as those with less than 340 kg/m torque). A similar approach would be recommended for drill rigs over 340 kg/m torque anticipated to be used in programs requiring higher well yields except that 6-inch (152.4 mm) casing and larger rock bits would be recommended.

- A non-stable, potentially caving, permeable sand that is dry would be drilled in like manner to a permeable sand aquifer with a change to tricone bits to seat the casing into bedrock.

- If the bedrock is at a relatively shallow depth, the drilling of dry or saturated stable non-caving overburden material could be drilled with a 5.5 inch (140 mm) bit on a down-the-hole hammer. The depth to bedrock and type of overburden material will establish the need to set casing prior to drilling of the bedrock. Normally, prior to proceeding to drill in the bedrock, grout would be tremied to the bottom of the hole in an amount that would equal or slightly exceed the volume of the space between the installed casing and the borehole face opposite the rock section drilled for seating the casing. Under some circumstances casing would be grouted to the surface, but this would prevent cutting it off at depth and saving some portion from unsuccessful drillings.

- A 4-inch (101.6 mm) PVC casing (open end) is recommended. Various means of seating and sealing the casing into the bedrock may be adopted. The use of a grout pump to fill the space between the casing and the borehole side wall with cement grout to ground surface is a preferred method.

- It is suggested that casing comparable to SDR-17* water well PVC casing, with a wall thickness of 0.265 inch (6.7 mm), or Schedule 40, with a wall thickness of 0.237 (6.02 mm), be used.

- Following setting of the well casing the drilling in bedrock is anticipated to be undertaken with a 3-9/16 inch (90 mm) bit on a down-the-hole hammer. European hammer designs (British, Swedish, etc.), primarily those for drill holes less than 6 inch (152.4 mm) in diameter, are much more efficient than U.S. designs. Atlas Copco literature in Appendix C describes penetration rates, at 150 psi (10.5 bar) at 66 feet (20.1 m) per hour for a 3-9/6 inch (90 mm) bit. Most, if not all, U.S. models, in the same type of rock, only achieve a penetration rate of approximately two-thirds of this value.

- Well completion should be accomplished by development and hydrofracturing procedures where appropriate. Personal communication with UNICEF personnel and others indicates a belief that air percussion drilling pressures of 220 psi (15.2 bar) and up have a greater tendency to pack cuttings into water bearing fractures than does drilling at lower pressures.

4.2.4 Principles Applicable to Rock Drilling

The basic need for rural village water supply wells installed in a rock formation is to drill a hole capable of accepting a 3 inch (75 mm) O.D. pump piston. In hard metamorphic and crystalline rock this dictates (see discussion on drilling methods in section 3.3) employment of down-the-hole air percussion drills with 3-9/16 inch (90 mm) bits. Operation of such can be done through utilizing either 2-3/8 inch (60.3 mm) or 2-7/8 inch (73.0 mm) drill pipe operated in a 4 inch casing while maintaining a minimum chip clearance of drill pipe to wall of 5/16 inches (7.9 mm) as discussed in Campbell and Lehr[11]. Adherence to this clearance would mean that 4-1/16 inch (110 mm) bits should not be run with 3-1/2 inch (88.9 mm) drill pipe, but larger bits could be used.

---

* SDR - Standard Dimension Ratio

American Society for Testing Material nomenclature which sets forth the material, dimensional, and quality requirements for thermoplastic well casing. Other standards may be appropriate for non-US casing.

Air requirements are less if larger drill pipe is used, without increasing bit size, since velocities are increased in the space remaining to carry cuttings to the surface. Up-hole velocities of 2,000 fpm (610 m/min) are reported to be satisfactory but better chip removal and penetration rates are expected at higher velocities. With casing of 4 inch (101.6 mm) diameter extending through the overburden, the volume of air required is calculated by the following formula:

$$Q = \frac{3.4}{4(144)} (D^2-d^2) \quad V \quad \text{or} \quad \frac{V\ (D^2-d^2)}{183}$$

Where: Q = compressor capacity in cfm (cubic feet per minute)

V = up-hole velocity in fpm (feet per minute)

D = borehole diameter in inches

d = drill pipe size (outside diameter) in inches

183 = a constant for the units employed

Utilizing the above formula the volume of air required to lift cuttings through a 4 inch (101.6 mm) casing while drilling with 2-3/8 inch (60.3 mm) drill pipe would be:

$$Q = \frac{2{,}000\ (16 - 5.6)}{183} = 114 \text{ cfm of } 2{,}000 \text{ fpm}$$

Compressor capacity Q, with 2-7/8 inch (73 mm) drill pipe, is equal to 84.5 cfm at 2,000 fpm. At an up-hole velocity of 4,000 fpm compressor capacity for various sizes of casing and drill pipe would be as shown in the table below.

Drill Pipe (inches)	Casing* (inches)	Calculated cfm at 2,000 fpm vel.	Calculated cfm at 4,000 fpm vel.
2-3/8	4	114	227
2-7/8	4	84.5	165
3-1/2	4	inadequate clearance for cuttings	
2-3/8	5	212	424
2-7/8	5	182.5	365
3-1/2	5	139	279
2-3/8	6	332	664
2-7/8	6	302	604
3-1/2	6	260	520
4-	6	218	436
4-1/2	6	172	344

* Casing size is indicated as nominal pipe size. Actual ID varies with different materials and specifications varies.

A selection based on the lowest air requirements is not necessarily a wise one for either the selection of compressor size or drill stem size. As nominal weight of the smaller stem is 6.65 lb/ft (9.9 kg/m) and the larger stem is 10.40 lb/ft (15.5 kg/m), the lifting capability of a particular rig for anticipated drilling depths needs to be checked. This is not normally a problem with either stem size as lifting capacity of most of the lightest rigs is 6,000 pounds (2,700 kg), or more.

Rig lifting capacity of small rigs would be a concern where very deep wells were required or where steel casing was employed. It is not a concern relative to setting the PVC casing mentioned in the above paragraphs. To permit introduction of a grout pipe, a 6-3/4-in (171 mm) borehole in the rock surface is probably the smallest diameter satisfactory for seating a 4 inch PVC casing. For drilling with tricone bits in hard metamorphic or crystalline rock the weight on the bit, according to some authorities to achieve reasonable rock penetration, should be greater than some 5,600 lb/in. (1,000 kg/cm) of bit diameter, or 37,800 pound (6,750 kg) for this sized bit. Such a weight cannot be developed in a shallow hole and is beyond the capability of light-weight rigs to handle such a weight in deeper boreholes. However, Driscoll[13] notes that generally, drillers start to hold back when the weight on the drill stem starts to exceed 10,000 pounds (4,540 kg).

One rig lifting operation is the removal of a drill string from the borehole. In this context 300 ft (91.4 m) of 2-7/8 inch drill stem weighs 2,916 pounds (1,325 kg) or approximately 3,000 pounds (1,364 kg) with 3-9/16 inch (90 mm) bit and air percussion hammer. This lifting ability should be within the capabilities of most light-weight rigs.

Rig "pull down" with down-the-hole hammer operation only needs to be sufficient to keep the bit closed in the tool. A figure of 2,000 to 4000 pounds (909 to 1,818 kg) is quoted by Campbell[11].

Rotary drilling with fluid circulation and roller bits can and is used for drilling consolidated rock formations. However, even soft shale and limestone require that a weight be applied to the drill bit of approximately 2,000 lb/in of diameter (357 kg/cm) to achieve optimum penetration. A combination of drill collars and pull down could be employed to meet these requirements but air percussion drilling would appear preferable in any consolidated formation.

Rotation speeds in any formation being drilled are normally adjusted by the driller according to the sound of the drilling and his view of rig vibration and operation. With down-the-hole hammers, a slower rotation is used in harder formations and recommended speeds normally range from 10 to 30 rpm (Driscoll[13]). One operational manual quotes a "rule of thumb" where the rotation speed in rpm is a value of about one-half the feet-per-hour penetration rate.

4.3 Summary of Drilling Rig Specifications

It is recommended that the following specifications be used in selecting a drilling rig for a program of village water well construction.

4.3.1 Operational Specifications

Operation - capable of drilling fluid rotary (mud) and air percussion (down-the-hole hammers).

Depth - rotary operations to depth of 200 feet (60 m), but capable of air percussion to 250 ft (76 m).

Diameter of borehole - 8 inch (203 mm) in unconsolidated materials. A 3-9/16 inch (90 mm) bit is needed in rock drilled through 4 inch (101.6 mm) PVC casing. An option is to use a 4-1/2 inch (114 mm) bit through 5 inch (127 mm) or 5-1/8 inch (130 mm) PVC casing.

4.3.2 Equipment Specifications

Rig mounting - single or dual axle trailer with loading on a single axle not to exceed 6,000 pounds (2,955 kg).

Torque - 1,500 ft lb (207 kg-m) with 7-1/2 inch (190.5 mm) drag bits or 2,000 ft lb (277 kg-m) with 10 inch (254 mm) drag bits are minimum amounts of torque.

Rotation - capable of operation as low as 10 rpm, or less, for air percussion and in excess of 100 rpm for fluid rotary drilling.

Stroke - capable of 10 ft (3 m), or more, for handling 10 ft (3 m) drill stems.

Pulldown - combined pulldown and pullback of at least 12,000 pounds.

Pullback - see above.

4.3.3 Basic Auxiliary Equipment

Mud pump - centrifugal pump with at least 340 gpm (21.5 lps) discharge at a head rating of 120 psi (8.2 bar).

Water/foam injection pump - 4 gpm at 250 psi (0.27 lps at 17 bar), minimum.

Air compressor - 350 cfm at 150 psi (165 lps at 10.5 bar), minimum for both volume and pressure. Compressors delivering lower values would be considered for very light-weight drill rigs but programs based on the light-weight rigs of 340 kg/m torque or more should have at least 340 cfm capacity at a pressure of at least 150 psi but not greater than 190 psi.

Drill pipe - 2-7/8 inch flush joint drill pipe. Although 3-1/2 inch is commonly used with the very light-weight drill rigs, it should not be operated through 4 inch casing. Where 6 inch casing is to be employed for specific projects, 4-1/2 inch aluminum drill pipe, or special light-weight 4-1/2 inch steel weighing not over 140 pounds (64 kgs) per 10 foot length, is believed to be a better choice to provide greater capability without excessive weight.

Chapter 5

ACCESSORY DRILLING EQUIPMENT

5.1 General Discussion

Details and descriptions presented earlier have identified some accessory equipment in basic drilling selection. Accessory equipment previously discussed includes:

- mud pump
- water/foam injection pump
- drill pipe
- pick-up truck (s)

Other accessory drilling and support equipment considered necessary, or useful to improve efficiency, is described and discussed in the following subsections. Before discussing specifics of specialized drilling equipment accessories, however, the overall drilling program operation must be considered. In this regard, the size of the rural well drilling program that is planned will determine the amount of equipment needed. The UNICEF experience in Uganda has demonstrated that a program using four drilling crews with four drilling rigs installing new wells is a cost-effective size of operation. In actuality, additional rigs (cable tool type) were used by UNICEF in an effort to rehabilitate previously drilled wells. While some PVOs successfully carry out operations with only a single drilling rig in-country, it is generally expected that a program operating with multiple rigs is a more efficient operation. With multiple rigs, the quantities of spare parts in stock, accessory equipment, and supplies can be planned on an optimum basis rather than a worst-case basis.

The discussion and listing of accessory equipment that follows focuses on equipping the larger drilling rigs being considered. This includes 4-1/2 inch (114.3 mm) drill pipe for drilling through 6 inch (152.4 mm) casing with 5-1/8 inch (130 mm) drill bits. In the interest of minimizing weight as well as ease and efficiency of operation, the drill pipe proposed is a 1/2 inch (12.7 mm) wall aluminum drill pipe with steel 2-7/8 inch API-IF tool joints weighing 106 pounds 48 kg) per 10 foot section. Light-weight steel of similar size weighing not over 140 pounds 64.4 kg) would be an alternate choice at about 55 percent of the cost of aluminum. The 6 inch (152.4 mm) casing should be PVC for similar reasons.

5.2 Accessories Related to Drilling

Accessory equipment directly related to drilling operations would include:

- drag bits for overburden drilling
- roller tricone bits for overburden drilling and seating casing in bedrock
- portable mud pits for overburden drilling*
- fluid drilling additives for overburden drilling
- down-the-hole air percussion hammers and bits for rock drilling
- containers for the transport and storage of water and fuel
- additives for use with air drilling

5.2.1 Accessory Equipment for Overburden Drilling

Three types of bits are employed for overburden drilling--roller tricone bits, which are considered as general purpose bits; drag bits, which are less costly and make good penetration under favorable conditions; and Zublin bits, which are predominately used for burying cobbles into the sidewalls of the borehole. Apparently, Zublin bits do not seem to have great acceptance and are not generally employed in areas where they would be most useful.

Drilling overburden by fluid rotary methods necessitates the use of fluid additives to prevent caving of the unconsolidated subsurface materials. Degradable polymers are recommended. Prior to the introduction of polymers, bentonite (termed "mud") was used, and is still used in some areas, but tended in some cases to form mud cakes which were difficult to remove. Bentonite is still useful for sealing casing into bedrock when drilling bedrock wells since it eliminates a 24-hour wait for cement grout to set before continuing the drilling.

Both bentonite and polymers need a mud pit to settle out cuttings from the borehole during fluid rotary drilling. The reference literature indicates the volumes for mud pits to be 1-1/2 times the volume of the drilled well but this can be much less with prompt removal of cuttings. A 350-gallon prefabricated metal mud pit is recommended (see Appendix D). A sand separation partition is not essential but is recommended to insure that sand is not carried over, causing difficulty with the drilling fluid consistency.

Basic accessory equipment for (1) overburden drilling related to providing a borehole for installation of 6 inch PVC casing prior to completion of a bedrock well, or (2) a 4 to 10 inch well in an unconsolidated aquifer up to 10 inches in diameter is listed in Table 2.

---

* See note in Table 2.

Table 2

Accessory Equipment for Overburden Drilling (6-inch well)

Drill String Items	Other Items
• drill pipe (incl. rock drilling list)	• 350-gallon portable mud pit (1)*
• 8-1/2 inch tricone bits (2)	• mud mixing device (1)
• 8-3/4 inch drag bits (2)	• water tanks: 55-gallon drums (10)
• 10 inch drag bits (2)	• 10 gpm, 12 volt, water transfer pump to fill water drums, powered from truck (1)
• 10 foot (800 lb) 6 inch drill collars (3)	• small piping for tremic grouting and air lift well development
• sub and adapters (incl. rock drilling list)	• transfer pump for fuel transfer from drums (1)
	• Sand separator from drilling* fluid (1)
	• small tools, shovels, wrenches, etc.
	• Weldon air-driven diaphragm pump with 4 inch suction hose for grouting (1)

Four 5-1/2 inch drill collars weighting 2,720 pounds total would probably be a better choice at $3,700 than the $3,600 cost for three 6-inch collars. Likewise, 55-gallon steel drums (removable tops) at $33 each are much less expensive and more flexible to use than a 500 gallon water trailer.

The total cost of the items identified is approximately $15,500, not including drilling fluids, additives, or material for cement grouting or contingencies.

---

* Mud pits may be hand dug if soil conditions are favorable. This is a task that the local community may contribute.

5.2.2 Accessory Equipment for Air Percussion Drilling

Air percussion drilling would use the same drill pipe, described above, as employed with fluid rotary drilling in overburden formations. As noted in earlier chapters, under certain conditions air percussion drilling might be practiced in overburden drilling but such operations are not normally recommended (see Table 3). Preference for low pressure air, 220 psi or less, and selection of European design hammers for use with bits of under 6 inch (152.4 mm) size was discussed in previous chapters. Bits employed with air percussion drilling are designed with insert buttons. Tools for reshaping these buttons need to be provided to a well crew as reshaping of the buttons will be necessary during the drilling operation. The reshaping tool is a special grinder driven by an air motor and generally sold and serviced by the air percussion bit supplier. The capital cost and weight of the hammer assembly probably dictates that a single unit be taken to the job site with three or more bits. It should be noted that two bits are exactly the same diameter, and care needs to be exercised so that a slightly larger bit is not used after one of slightly smaller size.

Table 3 indicates the basic equipment and quantities to support a drilling operation in the field for up to two years.

5.2.3 Basic Accessories for Overburden Drilling and Air Percussion Rock Drilling with Casings Limited to 4-inch (101.6 mm) Diameter

Tables 4 and 5 list slightly different drilling accessory equipment from that discussed in the previous two subsections if the drilling program is to be limited to the installation of 4-inch (101.6 mm) diameter well casing.

5.3 Miscellaneous Equipment

5.3.1 Water Tanks

The previous subsection identified a need for water tanks and recommended 10 standard 55-gallon (208 liter) drums as the standard equipment. The drums offer the least expensive means for providing water storage even though a small (probably gasoline-powered) engine-driven pump would be necessary for transfer. The drums also offer flexibility since half could be left at the job site while the other half were being filled. An alternative would be a 500 gallon (1,892 liter) water trailer. Volume specifications should be stated as a minimum, since available tanks may be somewhat larger depending on the supplier.

Table 3

Accessory Equipment for Air Percussion Drilling
(6-inch well)

Drill String Items	Other Items
• Down-the-hole hammers (Atlas Copco Cop-52) (2) $11,000	• air operated dia grinder (1) $500 - and accessories
• Button bits - 5-1/8 inch (3) $2,400	• Atlas Copco LSD 36 (1) $735 (button bit grinder*
• 4-1/2 inch steel 0.25 inch wall drill pipe 10 ft lengths (25) $8,500	• diamond pins for button reshaping (12) $1,320*
• Subs (2 ea. of 3 configurations, connecting hammers to drill pipe and pipe to drill rig) (6) $6,000	• Borroc pins for bit body shaping (5) $650*
• drill pipe hoist hood (2) $870 to drill pipe connector	• misc. small hose connections for grinder (-) $200*
• air list piping for development in overburden list - swab or other devices fabricated in-country	• Bentonite for grout seal, drilling foam and foam additive**
	• thread grease**
	• casing clamps and misc. small tools

The total cost of the items identified above, without any contingency allowance, totals $35,000.

* Many drillers reject the need for or desirability of these accessories.

** See Table 6 for established quantities and costs.

Table 4

Basic Accessory Equipment for Wells Completed
with Well Screens in Unconsolidated Formations
(4-inch well)

Assuming that all wells in unconsolidated formations will be completed without gravel packing, the basic accessory equipment needed to install such wells and to provide a borehole for installation of 4 inch (102 mm) ID PVC casing prior to completion of a bedrock well or shallow well in an unconsolidated aquifer will consist of the following:

Drilling String Items	Other Items
• Drill pipe is included in rock drilling list	• 240 gallon portable mud pit*
• 6-3/4 inch tricone bits (2)	• Water tanks - 55-gallon drums (2)
• 7 inch drag bits (2)	• Small piping for tremic grouting and air lift well development
• 8 inch drag bits (2)	• Hoses and pumps for water transfer
• 10 foot (680 lb.) 5-1/2 inch drill collars (4)	• Sand separator from drilling fluid*
• Grout pump, drill string sub and adapters are included in rock drilling list	• Small tools, shovels, wrenches, etc.
• Mud mixing device	• Organic polymer to make drilling fluid is included in rock drilling list

The total cost of the items identified above would approximate $12,000, not including drilling fluids, additives, material for cement grouting, or contingencies.

* See note in Table 2.

Table 5

Basic Accessory Equipment for Wells Completed in Bedrock by Air Percussion Drilling (4-inch well)

The following list presents the basic equipment and quantities considered appropriate to support drilling of 4-inch wells that are completed in bedrock with 3-1/2 inch (90 mm) diameter.

Drilling String Items	Other Items
• Down-the hole hammers Atlas Copco Cop-32, recommended quantity (2)	• Fuel transfer pump for drum mounting (1)
• Button bits - 3-1/2 inch (90 mm) quantity recommended (3)	• Air operated die grinder and accessories (1)
• 2-7/8 inch drill pipe - 10 ft. lengths (25)	• Atlas Copco LSD 36 button bit* grinder (1)
• Sub (2 each of 3 configurations - connecting hammers to drill pipe and pipe to drill rig) (6)	• Diamond pins for button reshaping* (12)
• Drill pipe hoist plug (2)	• Borroc pins for bit body shaping (5)*
• Air lift piping for development in overburden - swab or other devices fabricated in-country	• Misc. small hose connections for grinder*
• Weldon air driven diaphragm pump with 4 inch suction hose for grouting (1)	• Bentonite organic polymers, drilling foam and foam additive**
• 10 gpm 12 volt water transfer pump to fill water storage drums; powered from truck electricity (2)	• Thread grease
	• Casing clamps and misc. small tools.

The total cost of the items identified above, without any contingency allowance, is $30,000

* Many drillers reject the need or desirability of such accessories.

** See Table 6 for estimated quantities and costs.

Table 6

Drilling Fluids for One Lightweight Drill Rig

The following quantities are anticipated to be a minimum amount for up to two years of operation. However, usage should be monitored so a depletion of one or more items does not stop operations.

Quantity	Description*	Estimated Costs
100	Bentonite-Quick Gel 50-lb. waterproof bags	$ 900
5	Polymer-EZ-Mud 5-gallon pails	500
40	Quick Seal-used for annular grouting/lost circulation 50-lb. waterproof bags	1,000
2	Drill foam-Quick foam-55 gallon drums	1,500
5	Topco, lead-based, drill rod thread grease-2 gallon pails	500
**	Esso-Dextron 2-Hydraulic oil	385
**	Esso-Airox EP/100-Rock drill oil	715
	Total Estimated Cost (Exclusive of Export Packaging and Shipping)	**$5,500**

* Trade names are provided for ease of identification. If different brand names are bid, full identification of the product must accompany the bid.

** Approximately 65 gallons--in drums, 5-gallon pails, or combination thereof.

Suppliers

NL Baroid/NL Industries, Inc.
P.O. Box 1675
Houston, Texas 77251

Economy Mud Products Co.
P.O. Box 35422
Houston, Texas 77235

IMCO Services Division/Halliburton Co.
2400 West Loop South
P.O. Box 22605
Houston, Texas 77227

Also: American Colloid and others supply/manufacture comparable products.

5.3.2 Hydrofracturing Equipment

Hydrofracturing has been employed in the oil industry for about 40 years but only recently in the water well industry. The concept is to increase yields of low-producing water wells in rock by the injection of water under high pressure. Theoretically, a pressure of 200 psi (14.1 kg/cm^2) will overcome the weight of overburden material in a 200 ft (61 m) deep hole. However, to actually carry out hydrofracturing, pumps capable of producing 1,000 to 2,000 psi (70.5 to 141 bar) are employed to force open the bedrock fractures. Driscoll[13] states that 800 to 1,000 psi is generally sufficient to fracture formations that are somewhat fractured, but if only a few cracks are present, much higher pressures are necessary.

In the New England states (USA), the operation is undertaken by first lowering an inflatable packer into the bedrock below the casing and then injecting water at 1,000 psi (90.5 bar). One well driller, in the State of Maine (USA), reports achieving 75 percent success in at least doubling production from wells which previously yielded only 1 to 3 gpm (3.8 to 11.3 lpm) with a hydrofracturing pump turning out 60 gpm (378 lps) at 1,200 psi (84.6 bar). In most of these operations the pressure dropped to 500 to 600 psi (35 to 42.3 bar) and held at this level for 15 to 20 minutes. Apparently the duration was a function of the volume of water available.

A Massachusetts (USA) driller reported similar results but suggested that success was a function of the time that was spent in pressurizing. He increased one well from 5 to 25 gpm (18.9 to 94.6 lpm) but had to repeat the operation 4 times.

Kyle Equipment Company of Sterling, Massachusetts, manufactures a 1,000 psi (70.5 bar) model and a second with double this pressure. Both models deliver about 60 gpm (378 lps).

Atlas Copco produces a similar hydrofracturing unit which delivers 90 gpm (350 lpm) at 2,000 psi (140 bar). This unit was used by UNICEF crews in Uganda and results almost identical to those achieved in New England were reported. Further description of this equipment is provided in Appendix E.

Chapter 6

COMPARISON OF SELECTED DRILLING RIGS

Tables 6 and 7 compare selected equipment which might be considered for rural well drilling programs. The list of drilling units is not meant to be exhaustive but rather exemplifies a process of comparison between the units. All of the rigs are trailer-mounted.

Beginning with the basic premise that at least 1,600 ft lb torque is a requirement to operate drag bits in overburden drilling, the Deep Rock rigs do not meet this criterion. Other problems with this equipment have been identified by many in the field, but it has met with acceptance by several PVO organizations in the past due to the low cost of previously offered models. The Remaire model does include a deck-mounted air compressor operated by a separate 112 HP engine, but deck space is so tight that mounting a centrifugal mud pump is not possible and no provision is made for a high-speed auxiliary winch. Such a winch is desirable for bailer cleaning, development procedures, and testing capacity of completed wells.

The Canterra offering does meet a 1,600 ft lb torque minimum, but barely. This unit also includes a deck-mounted air compressor in a model which exceeds both minimum output and pressure requirements. Mud pump output is less than desirable and it lacks an auxiliary winch. The manufacturer and model of water pump and hammer oiler are omitted from the literature but could be provided if requested by purchasers, according to verbal discussion with Canterra. This unit includes many U.S. components but is fabricated in Canada. A U.S. office is maintained but it has not fully explored whether it could meet U.S. AID procurement requirements.

Problems of weight are present with both the Failing and Mobile equipment to meet the criteria expressed in previous chapters.

Weight is a major consideration in selecting equipment for a rural well drilling program. Sometimes there is no alternative to specifying a rig with weight in excess of that needed for servicing most rural communities. For example, Mobile B-80s were chosen for Bolivia where depth and other matters dictated such equipment. Even the Canterra CT-211s, mounted on Ford F-700s, have been described as bridge-cracking units and these units are lighter than the Mobile B-80 unit.

Table 7

Top-head Drive Drill Rigs with 7,500 lb, or less, operating weight

Manufacturer Model Designation	Deep Rock Ramaire	Canterra CT-371	Simco 2,800 HS (HT)
Torque (ft. lbs/kg-m)	1,333/184	1,620/220	3,500/
Rotation (rpm)	0-140	0-95	0-120
Pull-Down (lbs/kg)	5,700-2,872	6,000/2,700	6,500/
Pull-Back (lbs/kg)	8,500/3,950	6,000/2,700	6,500/
Main Power Unit (mfg)	MWM	Deutz**	Deutz
Diesel Model No./C.I.D.	-	BF6L913/	-
No. Cyl./H.P.	3/51 (38 kw)	6/165 (123 kw)	/100
Stroke	for 10 ft. rods	for 10 ft. rods	11.08 ft/3.38 m
Drive Head Movement	swing out	swing out	
Powered Breakout	Yes	Yes	Yes
Hammer Oil Injection	Yes	Yes	Manzell electric pump for 0-2 quarts/hr.
Water Injection Pump		Boyles-"Bronco"	Bean A0410c
Pump Capacity (gpm)		4 at 250 psi	0-8 gpm @ 500 psi
Mud Pump Mfg.	Weldon-diaphragm	Mission-centrifugal	Mission-centrifugal
Pump size		1x1-1/2-in	3 x 4 x 13-in.
Pump Capacity (gpm)	240 at 60 psi	180 at 145 psi	±340 at 120 psi
Air/Fluid Swivel Course	2-in.	1-1/2-in.	1-1/4-in.
Main Hoist Capacity (lbs)	2,500	2,300	3,500
Cable Diam (in.)/length	5/16-in/-	5/16-in/120 ft	3/8 in/80 ft
Aux. Hoist Capacity (lbs)	-	1,000	1,000
Cable Diam (in)/length	-	3/16-in/250 ft	3/16-in./500 ft
Trailer Mounting			
No. of Axles	two (2)	two (2)	two (2)
Tire Size	8x15 - 8 ply	to match hauling truck	8-14.5/12 ply (F) rate
Hydraulic Leveling	Option	Option	3 hydraulic 24-in.
Total Operating Weight (less fuel, water, tools) without compressor	N/A	N/A	7,500 lbs.
Total Operating Wt. with Deck-mounted Compressor	7,000 lbs	5,600 lbs	N/A
Compressor mfg.	Sulair*	Rotocomp (Bauer)	Sullivan
Compressor rating	350 cfm at 175 psi	450 at 190 psi	375 cfm at 150 psi
Price	See Appendix F	See Appendix G	See Appendix H
Estimated Cost for separate trailer-mounted compressor.	N/A	N/A	$26,000

* operated by separate 112 HP diesel engine.

** Current (1988) Canterra has replaced Deutz engine with Cummings 6 BT 5.9 liter with after-cooling turbocharged at a 177 H.P. rating.

Table 8

Top-head Drive Drill Rigs with operating weight over 7,500 lbs

Manufacturer Model Designation	Failing F-5	Gus Pech Bantam	Mobile B-80
Torque (ft. lbs/kg-m)	2,500/340	5,000/680	5,559/769
Rotation (rpm)	0-125	0-110	0-716
Pull-Down (lbs/kg)	10,000/4,545	15,700/7,136	11,000/5,000
Pull-Back (lbs/kg)	10,000/4,545	11,780/5,355	14,700/6,682
Main Power Unit (mfg)	Cummings	Cummings	Cummings
Diesel Model No./C.I.D.	6 BT 5.9/359	4 BT 3.9/238	6 BT 5.9/359
No. Cyl./H.P.	6/145	4/100	6/145
Stroke (ft/m)	operates w/ 15 ft rods	12/3.66	14/4.27
Drive Head Movement	retracts	18-in. cross slide	18-in. cross slide
Powered Breakout	Yes	Yes	Yes
Water Injection Pump	Bean A0411C	Bean A0411c	Venturi
Pump Capacity (gpm)	6.5 at 600 psi	6.5 at 600 psi	6.5 at 600 psi
Mud Pump Mfg.	Mission	Mission	Mission
Pump size	3 x 4 x 13-in	3 x 4 x 13-in	3 x 4 x 13-in.
Pump Capacity (gpm)	300 at 150 psi	300 at 150 psi	300 at 150 psi
Air/Fluid Swivel Course	1.5-in (38.1 mm)	2.0-in. (51 mm)	1.5-in. (38.1 mm)
Main Hoist Capacity (lbs)	5,000	3,000	7,000
Cable Diam (in.)/length	Option	3/8-in/350 ft	7/16 in/100 ft
Aux. Hoist Capacity (lbs)	available	1,500	2,600
Cable Diam (in)/length	option	1/4-in/100 ft	15/16-in/100 ft
Trailer Mounting	Goose-neck hitch	Goose-neck hitch	Goose-neck hitch
No. of Axles	two (2)	two (2)	two (2)
Tire Size	LT 235/85R-16E**	12:00 x 16	10 x 15 (F rated)
Hydraulic Leveling	24-in. std.	24-in. std.	24-in. std.
Total Operating Weight (less fuel, water, tools) **	14,000	12,000	15,200 lbs.
Price	See Appendix I	See Appendix J	See Appendix K

* In an attempt to keep weight to a minimum, it is anticipated that all trailer-mounted rigs would utilize separate trailer-mounted air compressors rather than deck-mounted. A 1987 quotation for a Sullivan 150 psi/375 cfm compressor was $26,000/trailer-mounted. Trailer mounting for all three drill rigs would be 2-axle with goose-neck hitch for Ford F350 or "Chassis Cab" trucks--except that the Gus Pech could be towed with the Ford F250 HO described in the text.

** Failing requires eight tires on a two-axle trailer as compared to four flotation tires listed for Gus Pech and Mobile. The Failing tires offer the advantages of being identical to tires installed on towing truck, generally available in LDCs, and less expensive than flotation tires.

Rig costs vary considerably depending upon the added equipment and accessories. For instance, a simple request for a diesel-powered trailer-mounted rig that would drill rock wells by air percussion methods to 250 feet, complete and ready to operate except without tools or accessories, could be met by a Simco 280 HS (4T) machine with a 27.5 HP rig with 3,500 ft lb of torque, capable of running only 5 foot drill rods and capable of penetrating only a shallow depth of overburden above bedrock. The price for such a machine would be less than $27,000. However, a request for the same basic requirement would reach $41,000 if the following were specified:

(1) the stroke shall provide for 10 foot rods;

(2) a Mission 3x4x13 inch mud pump is to be provided;

(3) the diesel engine and hydraulic system shall be fully equal to run the mud pump, perform the drilling, and operate a 0-8 gpm, a 0410C Bean water injection pump;

(4) include a main winch of 3,500-pound capacity, an auxiliary wing (1,000-pound capacity and line speed of 160 ft/min or more);

(5) a Manzell electric pump 0-2 quart/hr oiler for hammer operation;

(6) a water swivel of at least 1-1/4 inch inside diameter; and

(7) a powered break-out wrench for tool joints.

The Gus Pech offer is nearly $30,000 more than the Simco. It is heavier, slightly exceeding trailer-towing pick-up ratings but actually designed for that purpose. Its depth rating for drilling is more than twice the Simco model and presents an attractive alternative and a best choice, of equipment examined, where drilling must reach 300 feet or more.

Literature and cost figures provided by other manufacturers listed in comparison Tables 6 and 7 are included in Appendices F through K. Specifications and evaluation of actual tenders should be done by experienced people. The WASH Project offers such a service to USAID missions.

Other equipment, both foreign and of U.S. manufacture not examined, may be equally suitable for rural drilling programs. However, requests for proposals should be carefully worded to insure that what is proposed by one manufacturer is comparable to that of another and will serve the purpose for which it is intended.

Chapter 7

TRAINING

7.1 Formal Driller Training

A recent check of institutions that formerly provided education in water-well technology revealed that all of the U.S. institutions have dropped this curriculum. The National Water Well Association's catalog (April 1981) of institutions is attached in Appendix L.

J. Sargent Reynolds Community College, Richmond, Virginia, has provided special short-term, 10-week courses for USAID in recent years designed to provide foreign well drillers with some basic concepts in both groundwater hydrology and certain drilling techniques.

The Sir Sanford Fleming Program, in Ontario, Canada, is still offered. This program was and is generally recognized as the best preparation for a drilling career that one can obtain in the time encompassed in the program.

7.2 In-Country Supervision and Training

While many drilling programs are operating successfully in developing countries using local drillers, many other countries lack an adequate supply of trained drillers and rig mechanics. The maintenance of drill rigs is a particularly significant problem. Examples abound of drill rigs which have been scrapped after only a few years of operation in many developing countries. Improper or less than optimum operation standards have led to poorly constructed wells and equipment with short life spans.

Specialized training in rig repair will be needed in most drilling projects. Drill rigs are sufficiently complex that considerable attention needs to be paid to assuring rig maintenance and repair by competent mechanics. On-the-job training is appropriate in many drilling programs although project objectives must be clear as to whether the project is production oriented, training oriented, or a combination of the two.

Training services are generally accomplished more efficiently through a service contract with an experienced firm in the drilling business. Contracts to purchase drill rigs should contain provisions for factory representatives to provide specified training during the start-up operations of the rig and periodically thereafter. In many instances, operations and repair manuals will need to be translated into local languages. Short-term training experts may also be needed in hydrogeology for locating drilling sites, geophysical instrumentation, uses of fluid additives, inventory and warehousing hammer repair, bit sharpening, casing and screen fabrication, and a variety of other specialties.

Chapter 8

CONCLUSIONS

It is the premise of this report that developing countries should rely upon smaller drill rigs for their rural water supply programs than generally used in the past. Light-weight drill rigs have recently been developed which meet the technical requirements of most rural water supply programs. Significant savings in the purchase price and operating expenses of the smaller drill rigs can be expected. Such savings are critical in finding low-cost means to provide water supplies to the large number of rural inhabitants who presently lack clean and accessible water. This report has discussed considerations which are important in drill rig selection. A checklist of these considerations is provided in Table 8.

While this report focuses on technical considerations, these are by no means the only factors in undertaking a rural water supply program. The institutional, community, and human elements of rural water supply are of central importance and must be considered.

The management of drilling operations typically includes a combination of institutional arrangements. In some cases relatively more responsibility is given to non-governmental organizations (engineering firms, PVOs, etc.) while in other instances the government agencies retain overall responsibility with outside organizations acting as advisors. In recent years, government agencies have successfully contracted with private companies for specific phases of operations, particularly drilling operations; this has become common in several countries. Whichever form of management is adopted, adequate back-up for drilling operations must be assured. This includes such diverse but critical items as community organization, hydrogeological siting, fuel supplies, spare parts supplies, support vehicles, and many others. Unless these components are assured in quantities and timing to match the potential high production rates of modern drill rigs, there is little value in investing in such rigs.

A particularly important example of how institutional and management approaches affect drill rig production is found in the remuneration of drilling crews. Crews of these rigs often work under arduous conditions in remote locations and for extended periods of time. Crews on straight salaries have been found in many instances not to have adapted to the potentially increased production of fast drill rigs. Wage incentives based on production have been found appropriate to enhance efficient operation of the drilling program.

At the village level, it is necessary to involve the community in all phases of the program, from design through construction, and finally the continued operation and maintenance procedures. Successful programs usually require primary responsibility for operation and maintenance to remain with the village itself. The procedures and responsibilities for O&M should be thoroughly worked out and understood by all parties before the drilling operations begin. Procedures and considerations for community participation in water and sanitation projects are available in other WASH reports.

Table 9

Checklist of Considerations Influencing Drill Rig Selection

1. Site Considerations
   - Is terrain difficult (roads, bridges, etc.)?
   - Can site be found near village?
   - Are local resources limited?
     - for rig (fuel, water)?
     - for crew (food, housing)?

2. Well Characteristics
   - Is 6" or less diameter borehole adequate?
   - Is 75 meters maximum drilling depth sufficient, 30 meters average?
   - Will handpump serve or must other pumps be considered?
   - Is the well designed to prevent surface contamination?

3. Aquifer Characteristics
   - What is range of rock type (hard rock to unconsolidated materials)?
   - Is aquifer low yielding?
   - Is aquifer difficult to locate, requiring repeated attempts?

4. Drill Rig
   - Are rotary and air percussion capability required?
   - Can rig lift the weight of the maximum drilling chain?
   - Is torque adequate?
   - Is the flushing system adequate?
   - Is the weight of the rig a factor in negotiating terrain?
   - Are spare parts available?
   - Is repair service available?

5. Institutional, Community, and Human Services
   - Is the drill crew properly trained in rig operation and maintenance?
   - Does the drill crew have requisite wage and benefits incentive?
   - Has a program of pump O&M been established?
   - Is community participation assured?
   - Has health education been established as a part of the overall water supply programs?

Finally, it should be noted that the ultimate objective of a rural water supply program is to contribute to the improved health of the villagers. The provision of water alone is seldom sufficient. Water supply programs should also include a coordinated program of health and hygiene education. Approaches to incorporating hygiene education with water supply projects are also available in WASH reports. Through programs of providing water wells via low-cost drilling operations and integrating hygiene education into the process, improved health for rural inhabitants can be expected.

BIBLIOGRAPHY

BIBLIOGRAPHY

1. Ahmed, N. 1969. Tubewells Construction and Maintenance. Scientific Research Stores, 4 Abkari Road, Lahore, Pakistan

2. Aherns, T. D. 1957. "Well Design Criteria," Water Well Journal. Vol. II. Nos. 9 and 11, Sept. and Nov.

3. ———. 1970. "Basic Consideration of Well Design," Water Well Journal. April p. 45-50, May p. 49-51, June p. 48-51, August 35-37.

4. American Water Works Association. 1984. A.W.W.A. Standard for Deep Wells. A.W.W.A. A100-84, A.W.W.A. Denver, CO

5. Appleton, B. 1983. "Are Drilling Tenders Rigged?" World Water. April.

6. ———. 1983. "Choosing a Drilling Rig: the UNICEF Process Explained." World Water. May.

7. ———. 1983. "Manufacturers Bring Back Smaller Machines as Focus Moves to Village Supplies." World Water. July.

8. Arlosoroff, S. et al. 1987. Community Water Supply: The Handpump Option. Washington, D.C.: World Bank.

9. Blankwaart, B. 1984. Hand Drilled Wells. Rwegarulila Water Resource Institute, Dares Salaam, Tanzania - Distribution by: TOOL Foundation, Entrepotdok 68A/69A 1018 AD Amsterdam, Netherlands

10. Bush, R. E. 1978. Well Construction - Hand Dug Hand Drilled. Washington, D.C.: U.S. Peace Corps.

11. Campbell, M. D. and J. H. Lehr. 1973. Water Well Technology. New York: McGraw-Hill.

12. Davis, S. N. and Turk. 1969. "Best Well Depths in Crystalline Rocks," Ground Water, Vol. 2, No. 2, April, p. 6-11.

13. Driscoll, F. G. 1986. Groundwater and Wells - Second Ed. St. Paul, MN: Johnson Division.

14. Gibson, U. P. and R. D. Singer. 1971. Water Well Manual. Agency for International Development (Small Wells Manual - 1969), Premier Press.

15. Higgins, B. 1986. "Frontier for Rural Survival." World Water. November.

16. Larsson, I., Ground Water in Hard Rocks, UNESCO - Studies and reports in hydrology 33, UNESCO.

17. LeGrand, H. E., Ground Water in the Piedmont and Blue Ridge Provinces in the Southeastern States. U.S. Geological Survey - Circular 538, U.S. Govt. Printing Office.

18. Preble, R. E. 1974. The Effect of Drought Conditions upon Village Water Supply and Public Health in Mauritania. WASH Field Report No. 112.

19. ———. 1984. Helping Ghana Search for Water. WASH Field Report No. 132

20. Preble R. E., and E. Rumph. 1984. An Assessment of Problems and Needs for Water Supplies at Ethiopian Drought Victim Camps. WASH Field Report No. 138.

21. Preble, R. E., and P. Stevens. 1985. Ouagadougou's Water Supply and Water Supplies for Displaced Persons in Burkina Faso. WASH Field Report No. 144.

22. Roark, Philip et al. 1986. Final Evaluation: USAID/Burkina Faso Rural Water Supply Project. WASH Field Report No. 191.

23. ———. 1987. Privatization Study of the Village Water Supply and Sanitation Project--Lesotho. WASH Field Report No. 215.

24. ———. 1988. Final Evaluation of the USAID/Togo Rural Water Supply and Sanitation PRoject. WASH Field Report No. 228.

25. St. Michel, L. A., and R. E. Preble. 1986. Rural Water Supply and Emergency Needs in Uganda. WASH Field Report No. 189.

26. Sayre, A. N. and G. C. Taylor. 1951. Ground Water Resources of the Republic of El Salvador. U.S. Geological Survey - Water Supply Paper 1079-D, U.S. Govt. Printing Office.

27. Sternberg, Y. M. and R. Knight. 1980. Final Report on Broached Roboscreen. AID/DSE-C-0038.

28. Turner, W. 1984. Evaluation of Well Drilling Equipment for Bolivia Rural Water Supply and Sanitation Program. WASH Field Report No. 116.

29. U.S. Bureau of Reclamation. 1977. Ground Water Manual. U.S. Govt. Printing Office.

30. U.S. Environmental Protection Agency. 1975. Manual of Water Well Construction Practices. EPA-570/9/75/001, Washington, DC: Office of Water Supply.

31. Vozdvizhensky, R., O. Golubintseu and A. Novozhilov. 1982 English Ed., Exploratory Drilling. Mir Publishers, USSR 129820, Moscow, I-110, GSP, Pervy Rishsky Pereulok 2.

32. Watt, S. G. and W. E. Wood. 1977. Hand-dug Wells and Their Construction. Intermediate Technology Group, 9 King St., London, WCZE8HW, England.

33. ZaKula, V.S. 1985. Guidelines for Drillers, Engineers, Geologists and Drilling Trainees. UNICEF, Addis Ababa, Ethiopia.

APPENDIX A

Ground Water in Hard Rocks

Ground water in hard rocks

Project 8.6 of the
International Hydrological
Programme

Prepared by the
Project Panel,
Ingemar Larsson:
Chairman

Unesco

Table 2.2.3.1 Reported yields from wells in hard rocks of Africa (United Nations, 1973)

Country	Average rainfall (mm)	Province or area	Rock types	Yield per well (m^3/h)	Well depth (m)	Remarks
Angola	1000	South Catulti	Metamorphics Weathered tectonized granites	0.6 (aver.) 2 to 30		Fracture yields up to 80 m^3/h
Botswana	100-250		Granites, gneisses and schists	0.4 to 10		Under exceptionally favorable geological conditions
Central African Republic	800-1400		Gneisses, schists and quartzites	0.5 to 5	3-15	Of 400 dug wells put down during 1967-69 90 % were productive in the weathered layer above the basement.
Benin	750-1250	Central region	Granite gneisses, mica schists	1-4		
Ethiopia	1000-2000	Sidamo	Granite, gneiss and schist	Low		Weathered layers poorly developed Yields from fractured zones low and water often of poor quality.
Ghana	750-2000	Accra plains Upper and northern regions	Gr., gn., qtz. and biotite schist Granite	0.5-11 0.4-24	34 (aver.)	Depth based on 280 wells
Ivory Coast	1000-2000	Western Region	Granite	2 to 5	10-15	
Malawi	800-1500		Biotite gneiss Gneiss w/dolerites Graphite gneisses Gneiss (basal complex) Weathered zone of gneiss	5 0.5 4 1.2-3.6 1.2-5	60 (aver.) 30 " 45 " 25-40 25-40	Avg. 1.8 m^3/h Avg. 3.5 m^3/h
Mozambique	500	General	Orthogneiss, granite and paragneiss	4-8		w/"thick" surface weathered layer (10-25 m^3/h reported)
Zimbabwe	300-1200	Central area				
Sudan	20-500	Southern Kordofan	Granite, gneiss, schist	0.5-6		Weathered layer 10 to 50 m thick
South Africa	400-1500	Precambrian basement area	Granite gneisses and schists	0.5-10		Weathered layer 30 to 150 m thick Detected by electrical resistivity surveys. About 50 % of the boreholes in the country tap water in weathered layer.
Swaziland	500-1750	Central area	Granite gneiss	2 to 8	20-30	Weathered layer 10 to 30 m thick.
Togo	1000	Dapango Kande Dahomeyan	Granite-gneiss Schists Gneiss, granite and migmatites	3-175 5-1 25-50	0-8 0-11 0-20	Drawdown: 6-18 m Artesian in part
Uganda	1000	General	Granite gneiss	.2-2	30-100	
Upper Volta	400-1000	General	Granite gneiss and schists	2-2		3m^3/h reported maximum
Zaire	1500-2000	Orientale Maniema Bas-Congo	Weathered zone in Precambrian basement " " " "	1-8 1-8 1-8	25-100 40-100	0.2 to 2 specific yield l/s/m "
Zambia	500-1500	Kalomo-Choma Munali Pass Copper Belt	Weathered granite-gneiss, quartz veins and pegmatites Biotite schist Quartz veins Schist	3-5.5 1-2 1.2 1-2	35	Quartz veins have slight head (yield up to 11 m^3/h)

Table 2.2.3.2 Reported yields from wells in hard rocks of the Western hemisphere, India and Korea (after United Nations, 1973).

Country	Average rainfall (mm)	Province or area	Rock types	Yield per well (m^3/h)	Well depth (m)	Remarks
Brazil	300	Semi-arid region (Northeast)	Granite, gneiss, schists and other metamorphic and igneous rocks	0.3-8 (aver. 4)	20-40	Weathered layer ranges from 5 to 10 m thick. Water commonly contains more than 3000 mg/l. Spec. cap. 0.1 to 1.0 $m^3/h/m$.
	2000	Humid region (South and Southeastern)		0.5-20 (aver. 4)	10-30	Weathered layer ranges from 10 to 20 m thick. Water commonly contains less than 1000 mg/l. Spec. cap. 0.2 to 4 $m^3/h/m$.
Canada	750-1200	General	Gneiss Granite	1.0-3.0	30	Depths greater than 30 m commonly produce saline water.
India	700	Semi-arid region (Rajasthan)	Granite Slates	0.9-2.8 0.6-4.0 (aver. 2.2)	20-40	Wells tap weathered layer which is 12 to 25 m thick. Water brackish to slightly saline.
	1500	Sub-humid region (Karnataka)	Granite Cordierite, hornblende and biotite gneiss Crystalline schist Clayey schist and phyllite	0.15-15 (aver. 3.2) 0 - 10 (av. 3.2) " Low	13	Wells tap weathered layer at depths generally less than 15 m. "- "- Weathered layer clayey with poor aquifers.
Korea	1100-1300	General	Granite Schist Gneiss	12.2 (aver.) 7.0 (aver.) 5.3 (aver.)	74 (aver.) 97 (aver.) 88 (aver.)	Yield range: 0.2-34 (39 wells) Well depth range: 30-200 m Yield range: 0.6-17 (22 wells) Well depth range: 30-146 m Yield range: 0.5-21 (16 wells) Well depth range: 42-135 m
United States	500-1000	Piedmont region; Southeastern states	Gneiss and schist most common with some granite and other intrusive rocks	3 to 10 occasionally 20 or more (>180)	40-50	Weathered layer ranges from 15 to 30 m thick. Water generally contains less than 500 mg/l.
		New England Connecticut	Granite Gneiss Schist	2.6 (aver.) 2.4 " 3.1 "	44 (aver.) 40 " 44 "	Based on 217 wells Based on 261 wells Based on 63 wells
		New Jersey	Biotite gneiss Granite (Hornblende) Pyroxeus Granite and gneiss Amphibolite Quartz Diorite gneiss	2.2 " 2.1 " 1.9 " 1.5 " 1.4 "	37 " 48 " 42 " 49 " 71 "	Based on 29 wells Based on 81 wells Based on 162 wells Based on 31 wells Based on 31 wells
Uruguay	1000-2000	South	Granite, gneiss metamorphics	0.2 to 8 (aver. 5)	20-40	Sp. cap.: 0.1 to 1.8 $m^3/h/m$.

The pressing need for obtaining even a limited water supply (less than 1 gpm, or 0.2 m^3/h) has prompted random drilling, augmented occasionally by preliminary geological evaluations. Drilling has been conducted in many areas underlain by hard rocks, and voluminous data resulting from such drilling indicate a broad range in the productivity of such rocks. In Brazil, for example, approximately 63 per cent of the country is underlain by igneous and metamorphic rocks. Rebouças (1978) reports that approximately 15,000 wells have been drilled in fractured crystalline rocks, of which 92 per cent were considered successful. Many such wells have been in use for more than 30 years. The average specific capacity of the successful wells is 0.1 $m^3/h/m$ of drawdown which is consistent with previous investigations conducted in other countries (see Figures 2.2.4.3 - 2.2.4.15). A 60 metre depth limitation was suggested as a maximum economic drilling depth. This principle is followed in many countries.

APPENDIX B

Support Vehicle for Drill Rig Crew

SUPPORT VEHICLE FOR DRILL RIG CREW
FORD F250 HD

(Two vehicles per crew required)

FORD - 250 HD 4X4 with

- regular cab, standard trim, 8-foot body box length and 155-inch wheel base
- 170 HP 6.9 liter V-8 diesel engine
- automatic transmission (best for trailer towing)
- trailer towing package (see attached literature for details)
- skid plates
- LT 235/85 R-16E all-terrain tires (spare for every other truck)
- auxiliary fuel tank
- 72 amp/hr battery
- do not want automatic locking hubs as they just use more fuel.
- do want locked rear and front axles to prevent spinning in problem soils
- rear axle ratio 3.55

with GVWR of 15,000 lbs.
GCWR rating of 14,000 (or more) - Gross Combined Trailer and Load Rating
Curb weight of approximately 4,350 lbs.

Anticipated "FAS" price of approximately $14,500
Contact Jack Lasher or Mr. Frankeroli: (313) 344-6285
Fleet and Gov't Sales/Ford Export P.O. Box 600
Wixom, MI 48096

FORD F-SERIES PICKUP FOR 1987 PAYLOADS & DIMENSIONS

4x2

Pickup Box Length*	Series	Payload Pkg. No.	Payload**	GVWR	Tires
Regular Cab Pickups					
6½-ft Flareside	F-150	1	1,300 lb.	4,800 lb.	P215/75R-15SL
6¾-ft Styleside	F-150	1	1,325 lb.	4,800 lb.	P215/75R-15SL
6½-ft Flareside	F-150	2	1,715 lb.	5,250 lb.	P215/75R-15SL +
6¾-ft Styleside	F-150	2	1,740 lb.	5,250 lb.	P215/75R-15SL +
8-ft Styleside	F-150	1	1,315 lb.	4,900 lb.	P215/75R-15SL
8-ft Styleside	F-150	2	1,830 lb.	5,450 lb.	P215/75R-15SL +
8-ft Styleside	F-150	3	2,585 lb.	6,250 lb.	P235/75R-15XL +
8-ft Styleside	F-250	1	2,485 lb.	6,400 lb.	LT215/85R-16C
8-ft Styleside	F-250	2	3,725 lb.	7,700 lb.	LT235/85R-16D +
8-ft Styleside	F-250HD	1X	4,490 lb.	8,600 lb.	LT235/85R-16E
Dual Rear Wheel	F-350	1	5,450 lb.	10,000 lb.	LT215/85R-16D(DR)
SuperCab Pickups					
6¾-ft Styleside	F-150	1	1,980 lb.	6,050 lb.	P235/75R-15XL
8-ft Styleside	F-150	1	2,075 lb.	6,250 lb.	P235/75R-15XL
8-ft Styleside	F-250HD	1X	4,135 lb.	8,800 lb.	LT235/85R-16E
Crew Cab Pickups					
8-ft Styleside	F-350	1	4,195 lb.	9,200 lb.	LT235/85R-16E
8-ft Styleside	F-350	1	4,795 lb.	10,000 lb.	LT215/85R-16D(DR)

*Nominal **Maximum allowable weight of people, cargo, body and equipment + Required option Note: Consult your Ford Dealer or Chassis-Cab catalog for Chassis Cab information

4x4

Pickup Box Length*	Series	Payload Pkg. No.	Payload**	GVWR	Tires
Regular Cab Pickups					
6½-ft Flareside	F-150	1	2,200 lb.	6,100 lb.	P235/75R-15XL
6¾-ft Styleside	F-150	1	2,220 lb.	6,100 lb.	P235/75R-15XL
8-ft Styleside	F-150	1	2,275 lb.	6,250 lb.	P235/75R-15XL
8-ft Styleside	F-250	1	2,350 lb.	6,600 lb.	LT215/85R-16C
8-ft Styleside	F-250HD	1	4,120 lb.	8,600 lb.	LT235/85R-16E
8-ft Styleside	F-350	1	4,320 lb.	9,000 lb.	LT235/85R-16E
SuperCab Pickups					
8-ft Styleside	F-150	1	1,750 lb.	6,250 lb.	P235/75R-15XL
8-ft Styleside	F-250HD	1	3,660 lb.	8,800 lb.	LT235/85R-16E
Crew Cab Pickups					
8-ft Styleside	F-350	1	3,825 lb.	9,200 lb.	LT235/85R-16E

*Nominal **Maximum allowable weight of people, cargo, body and equipment

EXTERIOR DIMENSIONS

Cab Type	Series	WB (in.)	Box IL* (ft.)	IW max. Width (in.)	(4x2) LH (in.)**	(4x2) CH (in.)**	(4x4) LH (in.)**	(4x4) CH (in.)**	OAL (in.)†
STYLESIDE PICKUP									
Regular	F-150	116.8	6¾	70	30.2	69.8	33.3	73.8	194.1
	F-150	133	8	70	29.2	69.9	32.8	73.2	210.2
	F-250	133	8	70	32.5	73.0	34.2	75.7	210.2
	F-250HD	133	8	70	34.4	74.4	36.3	76.7	210.2
	F-350 DR††	133	8	70	33.0	73.4	38.6	78.5	210.2
SuperCab	F-150	138.8	6¾	70	31.4	72.1	—	—	216.1
	F-150	155	8	70	31.3	71.9	33.2	74.0	232.2
	F-250 HD	155	8	70	34.2	74.6	36.0	77.0	232.2
Crew Cab	F-350	168.4	8	70	34.1	74.6	35.6	78.3	245.7
	F-350 DR	168.4	8	70	32.9	74.1	—	—	245.7
FLARESIDE PICKUP									
Regular	F-150	116.8	6½	54	30.2	69.8	33.3	73.8	193.6

*Nominal **Estimated empty. See your Ford Dealer for details. †Without rear bumper. Add 4.3" for opt. urgent step bumper, 4.5" for opt. bright step bumper. Add 2.2" for channel bumper. ††Dual rear wheels not included with 4x4 model.

TRAILER TOWING

NO ONE OUTPULLS FORD

Ford pickups have the largest rated trailer towing capacity in the industry, bar none.

Pickup GCWRs go as high as 14,000 pound with optional high-torque 6.9 liter diesel, an the way up to 18,500 pounds with the big-cu 7.5 liter gas V-8!

If you have an intermediate size trailer, the F-250 4x2 (under 8,500-lb. GVWR) with 5.8 liter High Output V-8 and recommended tra towing equipment is rated to handle GCWRs to 13,500 pounds.

Both 4x2 and 4x4 pickups offer a complete Trailer Towing/Camping Package that provid all the basic ingredients for recreational or w towing. Consult your Ford Dealer for all the details concerning specific equipment requirements and restrictions.

TRAILER/TOWING CAMPER PACKAGE

This package includes:

- Front and rear stabilizer bars*
- Heavy duty front springs
- Heavy duty front and rear shock absorber
- Quad front and heavy duty rear shock absorbers on F-150 Regular Cab 4x4 mod
- 72 amp/hour maintenance-free battery w 650 cold cranking amps (with 5.8L engine
- Bright low mount swingaway mirrors on Custom trim Regular Cab single rear wheel Styleside models
- 7-wire trailer towing wiring harness
- Heavy-duty flasher
- Super engine cooling
- Engine oil cooler and electric fuel pump (wi the 7.5 liter 4V engine)
- Auxiliary transmission oil cooler with automatic transmissions

*Heavy duty rear springs replace the stabilizer bars on F-250 HD 4x4 pickups with the 6.9 liter diesel in combination with Super Engine Cooling or air conditioning and F-350 with 133-in. wheelbase.

Some equipment shown on these pages may be optior See options list on pages 20-21.

FORD F-SERIES

4x4

Equipment	F-150 Reg Cab	F-150 SuperCab	F-250 Reg Cab	F-250 HD Reg Cab	F-250 HD SuperCab	F-350 Reg Cab SRW	F-350 Crew Cab SRW
Max. GVWR (lb.)	6,250	6,250	6,600	8,600	8,800	9,000	9,200
Axle, front (max. rating lb.)	3,550	3,550	3,850	3,850	4,600	5,000	5,000
Axle, rear (max. rating lb.)	3,800	3,800	5,300	6,250	6,250	6,250	6,250
Brakes, power	Std.	Std.	Std.	Std	Std	Std	Std
Clutch (hydraulic actuation) Dia.	10"	10"	10"	11"	11"	11"	11"
Electrical: battery (amp-hr) Std.	54	54	54	54	54	54	54
Opt.	72	72	72	72	72	72	72
Alternator (amp.)	60	60	60	60	60	60	60
Engine (displ.) Std.	4.9L EFI I-6	4.9L EFI I-6	4.9L EFI I-6	5.8L HO V-8(1)	5.8L HO V-8(1)	5.8L HO V-8(1)	5.8L HO V-8(1)
Opt.	5.0L EFI V-8 5.8L HO V-8(1)	5.0L EFI V-8 5.8L HO V-8(1)	5.0L EFI V-8 5.8L HO V-8(1)	7.5L V-8 6.9L V-8 Diesel	7.5L V-8 6.9L V-8 Diesel	7.5L V-8 6.9L V-8 Diesel	7.5L V-8 6.9L V-8 Diesel
Fuel tank capacity (gal.) SWB Std.	16.5	—	—	—	—	—	—
LWB Std.	19.0	38.0	19.0	19.0	38.0	19.0	38.0
Aux. tank capacity (gal.) SWB Opt.	19.0	—	—	—	—	—	—
LWB Opt.	19.0	—	19.0	19.0	—	19.0	
Hubs: free-running, manual locking	Std.	Std.	Std.	Std.	Std.	Std.	Std.
Auto-locking	Opt.	Opt.					
Shock absorbers: Gas-pressurized, front and rear	Std.	Std.	Std.	Std.	Std.	—	
HD front and rear	Opt.	Opt.	Opt.	Opt.	Opt.	Std.	Std.
Springs: Front Std.	Coil	Coil	Tapered leaf, Constant rate	Tapered leaf, Constant rate	Tapered leaf, Constant rate	Tapered leaf, Constant rate	Tapered leaf, Constant rate
Rear Std.	2-stage leaf, variable rate	2-stage leaf, variable rate	2-stage leaf, variable rate	2-stage leaf, variable rate	2-stage leaf, variable rate	2-stage leaf, variable rate	2-stage leaf, variable rate
Opt.	Heavy-duty front and auxiliary rear springs for many models. See your Ford Dealer.						
Steering	Power	Power	Power	Power	Power	Power	Power
Transmission Std.	4-spd. manual	4-spd. manual	4-spd. manual	4-spd. manual	4-spd. manual	4-spd. manual	4-spd. manual
Opt.	4-spd. manual overdrive SelectShift auto AOD	SelectShift auto AOD	SelectShift auto AOD	SelectShift auto	SelectShift auto	SelectShift auto	SelectShift auto
Wheels: type/rim size Std.	5-hole, 6JK (5)	5-hole, 6JK (5)	8-hole 6K (4)	8-hole, 6K (4)	8-hole, 6K (4)	8-hole, 6K (4)	8-hole 6K (4)
Tires: tubeless Std.	P235/75R 15XL	P235/75R 15XL	LT215/85R 16C	LT235/85R 16E	LT235/85R 16E	LT235/85R 16E	LT235/85R 16E
Opt.	Tubeless tires are available to match payload package requirements. Consult your Ford Dealer for adequate tires.						

EFI = Electronic Fuel Injection HO = High Output HD = Heavy Duty DRW = Dual Rear Wheels (1) NA in California

POWERFUL ENGINES

The 5.0 liter V-8, the most powerful small V-8 in a full-size pickup, also offers you the advantages of multiple port EFI plus the added performance that's ideal for trailer towing and other applications that require the excellent balance and power of a V-8 engine.

The 5.8 liter High Output V-8 engine provides outstanding true-truck performance. It features a big free-breathing 4-barrel Holley carburetor and a special low back-pressure exhaust system. It's an excellent choice for handling trailers up to 9,200 pounds.

The 7.5 liter gas V-8 is the biggest engine available in a full-size pickup. It gives you the optimum in big V-8 performance for trailer towing, big campers and rugged commercial uses.

DIESEL POWER, TOO!

The 6.9 liter diesel V-8 is available in the F-250 HD and F-350 Series pickups. With its 170 horsepower rating (150-hp for high altitude areas), it is the biggest and most powerful diesel engine offered in a full-size pickup.

APPENDIX C

Down-the-hole Drills

	COP 32		COP 42		COP 52		COP 62	
	SI	British	SI	British	SI	British	SI	British
Dimensions and weights								
Weight excl. bit . . . . . kg (lb)	23	(51)	35	(77)	66	(145)	93	(205)
Length excl. bit. . . . . mm (in)	925	(36.4)	960	(37.8)	1150	(45.3)	1280	(50.4)
Piston diameter. . . . . mm (in)	60	(2.4)	76	(3.0)	92	(3.6)	112	(4.4)
External diameter . . . . . mm (in)	77	(3.1)	96	(3.8)	118	(4.6)	138	(5.4)
Stroke length . . . . . mm (in)	100	(3.9)	100	(3.9)	100	(3.9)	105	(4.1)
Spanner width (back head) . . . . mm (in)	50	(2.0)	65	(2.6)	65	(2.6)	95	(3.7)
Connection thread (back head) . mm (in)	Rd 50–6 Female		API 2 3/8" REG. Male		API 2 3/8" REG. Male		API 3 1/2" REG. Male	
	alt. API 2 3/8" REG. Male		– –		alt. API 3 1/2" REG. Male		– –	
Air consumption								
at 6 bar (87 psi) . . . . . l/s (cfm)	40	(85)	62	(131)	65	(138)	100	(212)
at 10.5 bar (150 psi) . . . . . l/s (cfm)	77	(163)	115	(244)	130	(275)	200	(424)
at 18 bar (260 psi). . . . . l/s (cfm)	–	–	200	(424)	220	(466)	350	(742)
Air consumption with choke plug at different operating pressures:								
	With 4 mm choke plug		With 5 mm choke plug		With 7 mm choke plug		With 7 mm choke plug	
at 6 bar (87 psi) . . . . . l/s (cfm)	50	(106)	71	(151)	105	(223)	140	(297)
	–	–	With 7 mm choke plug		With 10 mm choke plug		With 10 mm choke plug	
	–	–	102	(216)	125	(265)	160	(339)
	With 4 mm choke plug		With 5 mm choke plug		With 7 mm choke plug		With 7 mm choke plug	
at 10.5 bar (150 psi) . . . . . l/s (cfm)	103	(218)	132	(280)	200	(424)	260	(551)
	–	–	With 7 mm choke plug		With 10 mm choke plug		With 10 mm choke plug	
	–	–	185	(392)	255	(541)	325	(689)
	With 4 mm choke plug		With 5 mm choke plug		With 7 mm choke plug		With 7 mm choke plug	
at 18 bar (260 psi). . . . . l/s/cfm	–	–	250	(530)	350	(742)	480	(1018)
	–	–	With 7 mm choke plug		With 10 mm choke plug		With 10 mm choke plug	
	–	–	330	(700)	420	(890)	550	(1166)
Standard drill bit dimensions mm (in) Sandvik Coromant	85	(3 3/8)	105	(4 1/8)	130	(5 1/8)	150	(5 15/16)
	90	(3 9/16)	110	(4 5/16)	140	(5 1/2)	155	(6 1/8)
	100	(3 15/16)	115	(4 1/2)	–		165	(6 1/2)
	–		125	(4 15/16)	–		–	
Working pressures . . . . . bar (psi)	6–12	(87–174)	6–25	(87–360)	6–25	(87–360)	6–25	(87–360)
Ratings								
Impact rate at 6 bar (87 psi) . . . Hz (blows/min)	21	(1300)	21	(1300)	18	(1080)	17	(1000)
at 10.5 bar (150 psi) Hz (blows/min)	27	(1650)	27	(1650)	21	(1290)	21	(1300)
at 18 bar (260 psi) Hz (blows/min)	–		35	(2100)	28	(1700)	26	(1600)

Technical specifications

	COP 32	COP 42	COP 52	COP 62
Operating pressure	6-12 bar	6-25 bar	6-25 bar	6-25 bar
Standard drill bit dimensions	85 mm 3 3/8 in 90 mm 3 1/2 in 100 mm 4 in	105 mm 4 1/8 in 110 mm 4 5/16 in 115 mm 4 1/2 in 125 mm 5 in	130 mm 5 1/8 in 140 mm 5 1/2 in	150 mm 6 in 155 mm 6 1/8 in 165 mm 6 1/2 in
ODEX equipment Casing tube outside diameter	ODEX 90 114 mm 4 1/2 in	ODEX 115 140 mm 5 1/2 in	ODEX 140 168 mm 6 5/8 in	ODEX 165 194 mm 7 5/8 in
Air consumption at 6 bar (87 psi) 10.5 bar (150 psi) 18 bar (260 psi)	40 l/sec 77 l/sec –	62 l/sec 115 l/sec 200 l/sec	65 l/sec 130 l/sec 220 l/sec	100 l/sec 200 l/sec 350 l/sec
Weight excl. drill bit	23 kg 50 lb	35 kg 77 lb	66 kg 145 lb	93 kg 205 lb
Length excl. drill bit	925 mm 36 in	960 mm 38 in	1150 mm 45 in	1280 mm 50 in
Connection thread	RD50-6 Female alt. API 2 3/8" REG Male	API 2 3/8" REG Male	API 2 3/8" REG Male alt. API 3 1/2" REG Male	API 3 1/2" REG Male
Impact rate at 6 bar (87 psi) 10.5 bar (150 psi) 18 bar (260 psi)	1,300 blows/min 1,650 blows/min	1,300 blows/min 1,650 blows/min 2,100 blows/min	1,080 blows/min 1,300 blows/min 1,700 blows/min	1,000 blows/min 1,290 blows/min 1,600 blows/min

Atlas Copco experts are always available to match the new COP Downhole Drills to your equipment combination. They take all factors into consideration: type of bits to be used, drilling patterns, adjustment of rigs and compressors, as well as care and maintenance schedules. Factors that will help you attain maximum drilling performance.

For detailed information on Sandvik Coromant rock drilling tools and Atlas Copco compressors, drill rigs and rock drills, ask for our special brochures.

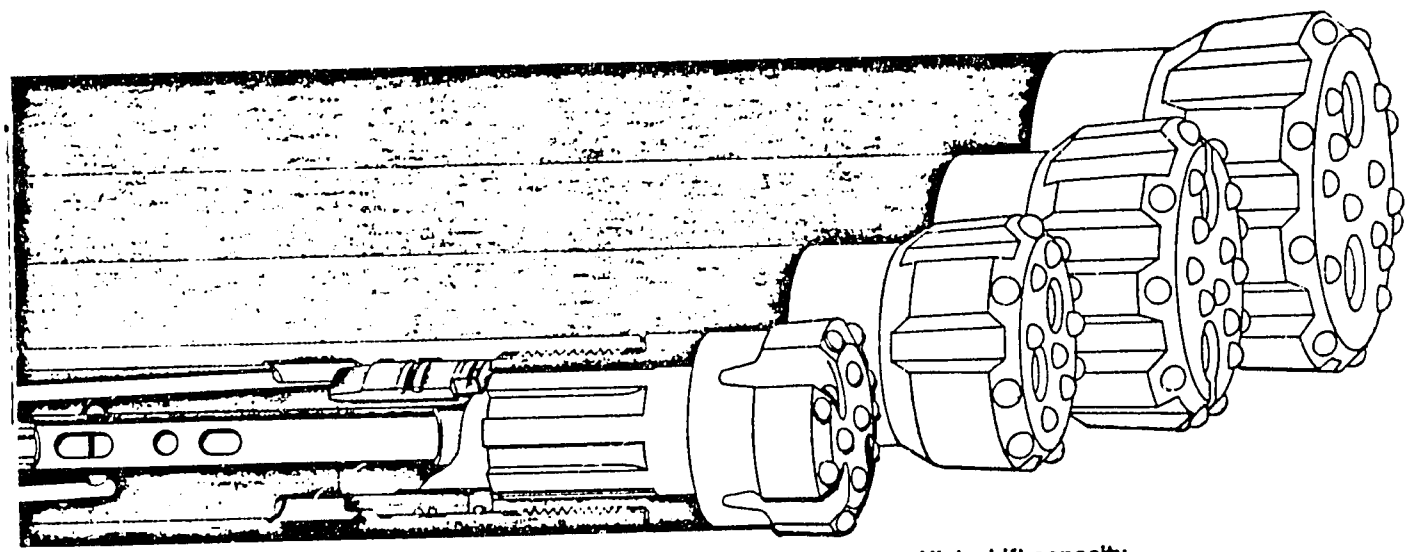

High output. *The combination of well-matched impact rate, large piston area and heavy impact piston, gives the COP Downhole Drills high output capacity over a operating pressure extending from 6 to 25 bar. Optimum operating pressure at the DTH-drill is 15-20 bar from both capacity and economical point of view.*

Low air consumption

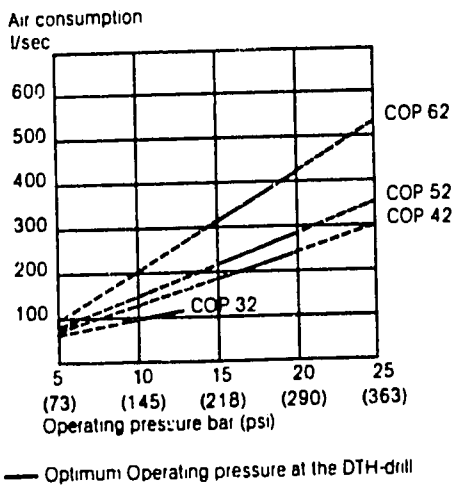

High shift capacity

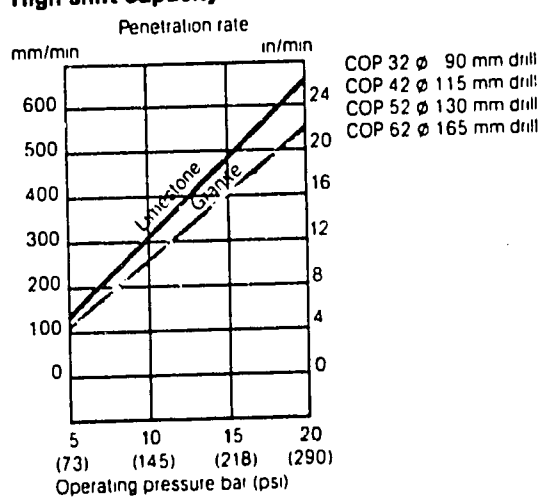

APPENDIX D

Mud Tank

MUD TANK WITH BAROID® MINI™ DESANDER

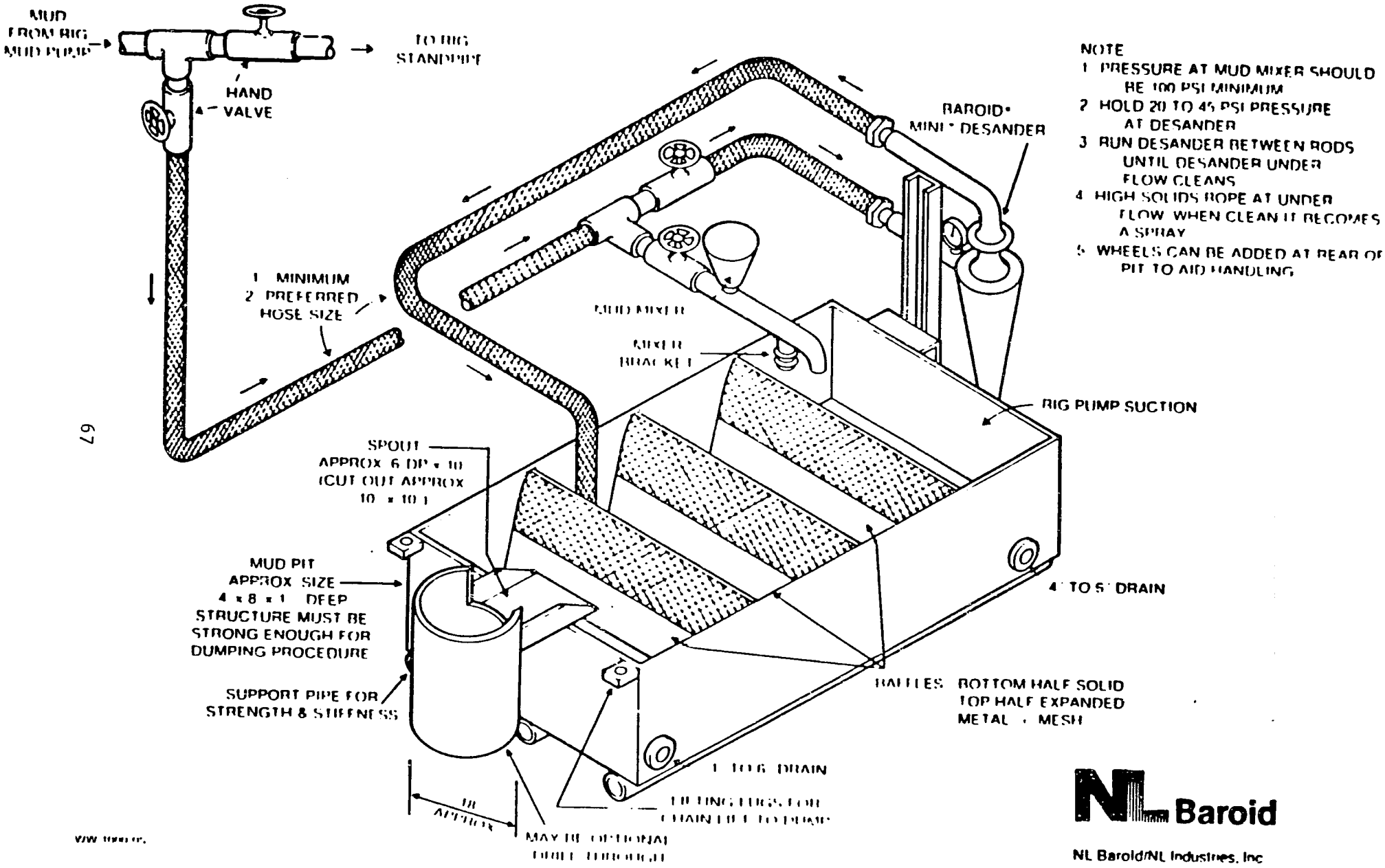

NL BAROID

SUGGESTED DESIGN JET/HOPPER MUD MIXER FOR PORTABLE RIGS

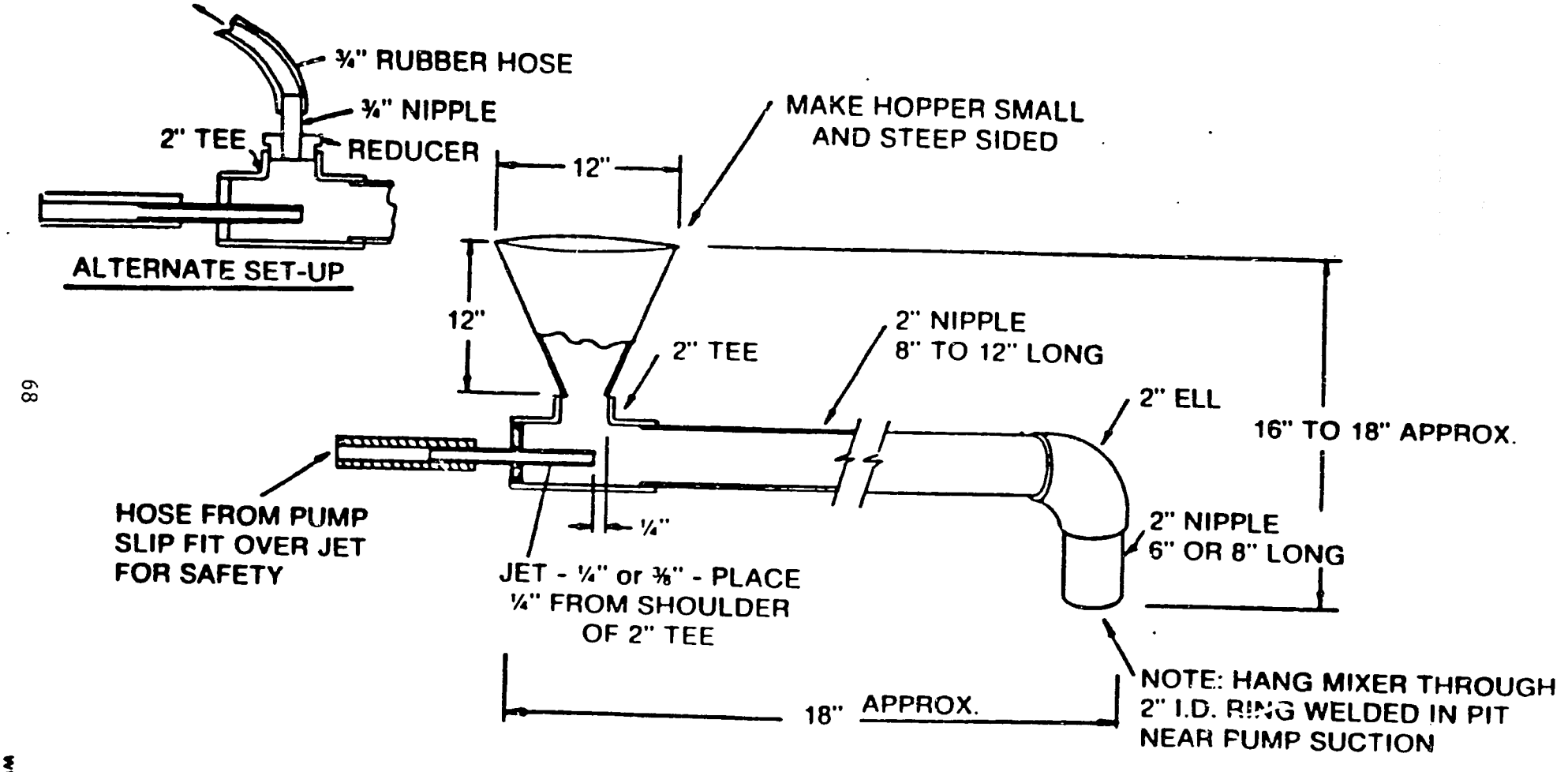

NOTE: TO MIX, GET ALL THE PRESSURE POSSIBLE ON JET - UNTIL YOU HEAR CRACKLING SOUND IN HOPPER/JET - THEN POUR IN QUIK GEL **SLOWLY**

NL Baroid

NL Baroid/NL Industries, Inc
PO Box 1675, Houston, Texas 77251

APPENDIX E

Hydrofracturing Pump

Atlas Copco

AQUASPLIT HFU 140B (basic system)

The simple and effective means of opening up clogged water well drill holes using a hydraulic expanding packer and water at high pressure. Drill hole diameter up to 6½ inches.

Atlas Copco

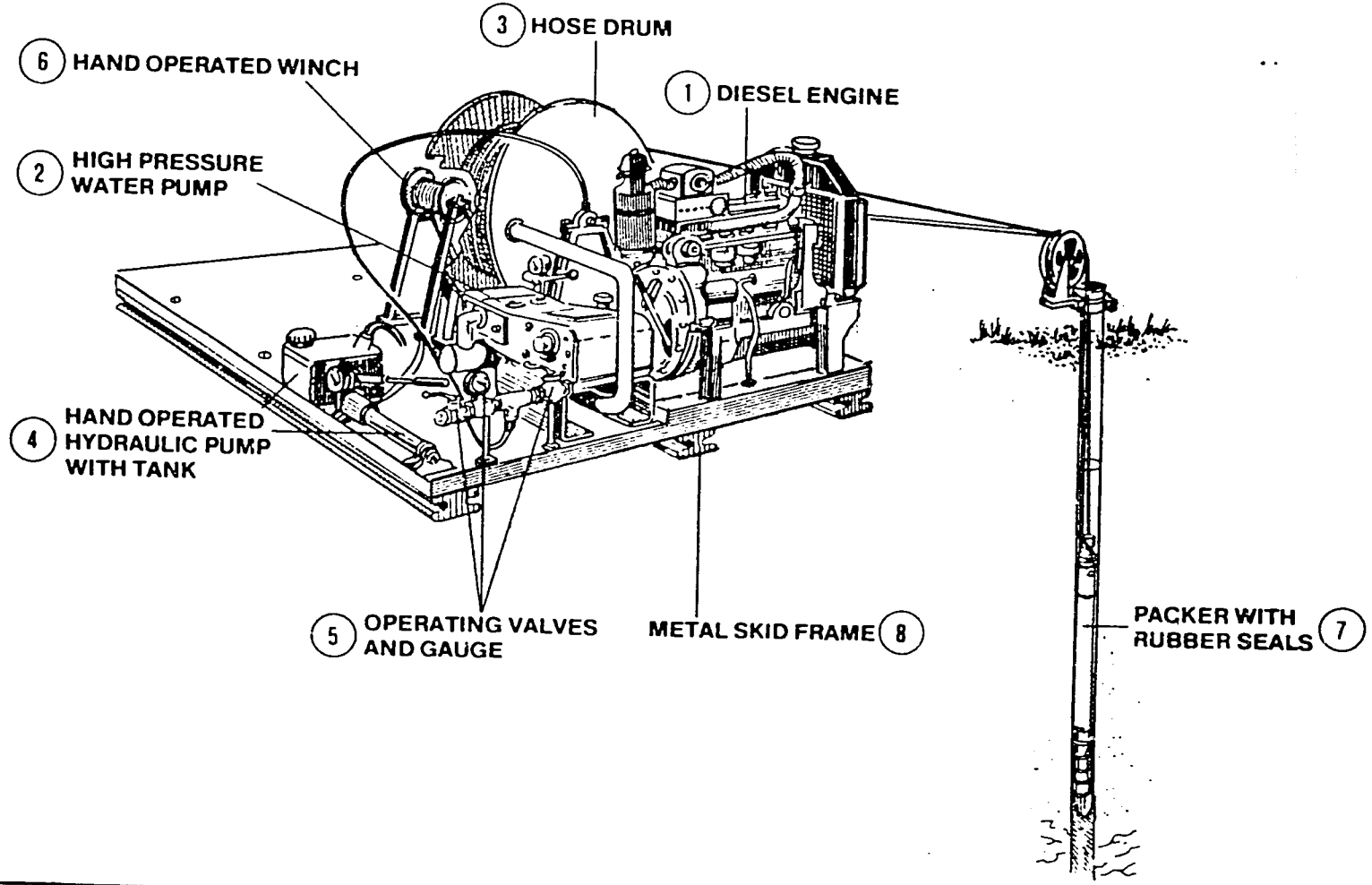

ACE E 105050

Atlas Copco Energy AB
S-105 23 STOCKHOLM
Sweden

Telex 14090 copco s exda+++
Tel +46(0)8 743 80 00

AQUA DRILL

Atlas Copco

1 An IVECO, type 8061 I, 75 kW, 2 300 rev/min diesel engine. The engine has automatic switch-off system for high water temperature and low oil pressure, and is equipped with tachometer and indicators for time, temperature and fuel. Fuel tank capacity 120 litres.
2 High pressure water pump delivering 350 l/min, maximum working pressure 140 bar.
3 High pressure hose drum with three 45 metres high pressure hoses; one 1 ¼ inch water hose, maximum working pressure 180 bar and two ¼ inch hydraulic hoses, maximum working pressure 700 bar.
4 A hand operated hydraulic pump for expansion of the hydraulic packer. Maximum working pressure 700 bar. The hydraulic tank contains 8 litres of organic, non-toxic oil.
5 For effective control of the packer, there are one hydraulic oil valve with oil pressure gauge, and two water cut-off valves.
6 A hand operated winch for easy handling of packer and accessories. Maximum pulling capacity 1000 kg.
7 Double acting hydraulically expanding packer with rubber seals diameter 4 ½ inch. Options up to 6 ½ inch are available.
8 The components are mounted on a metal skid frame measuring 2 400 mm × 2 500 mm. Approximate weight 900 kg.

1 l	= 0.26 US gals	1 kg	= 2.20 lb
1 m	= 3.28 ft	1 bar	= 14.50 psi
1 kN	= 100 kp	1 l/s	= 2.12 cfm
1 Nm	= 0.10 kpm = 0.737 lbf.ft	1 inch	= 25.4 mm

In accordance with our policy of progressive product improvement, specifications may be changed without prior notice

HYDRO - FRAC

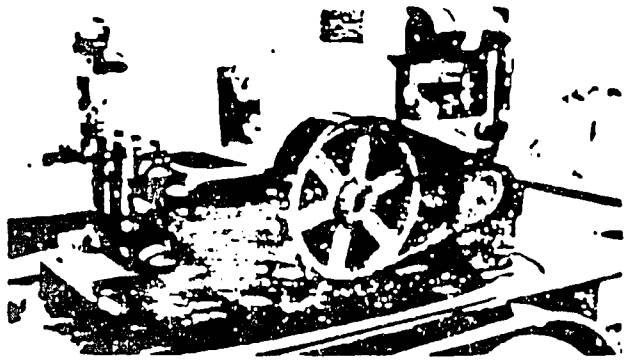

Oilfield Well Development Technology now available to the Well Drilling Industry.

- high pressure, fresh water stimulation of marginal yield drilled wells.
- complete, simplified, scaled down version of oilfield system.
- designed to be carried on a pick-up or light utility trailer.

Contractors report success rate approaching 100%.

It Works!
It's Economical!
It's available for immediate delivery at:

KYLE EQUIPMENT COMPANY

14 Legate Hill Road
Sterling, MA 01564

1-800-426-6377

In Mass: (617) 422-8448

APPENDIX F

Deep Rock Literature

RAMAIRE

Specifications

- **Drill head torque** - 16000 lb./in., 184 kg-m
- **Drill head rotation** - 0-140 rpm
- **Drill head travel speed** - 1.2 ft./sec., 365 mm/sec
- **Pull down capacity** - 5700 lb. max., 2582 kg
- **Lifting capacity** - 8500 lb., 3850 kg
- **Engine** - 51 hp, 38 kW, three cylinder diesel for hydraulics
  - 90 hp, 67 kW, four cylinder turbo-charged diesel for compressor
  - * Optional 112 hp, 83 kW six cylinder turbo-charged diesel
- **Hydraulic pumps** -
  - Hydrostatic 25 gpm, 95 lpm
  - Piston pump 13.6 gpm, 51 lpm
- **Hydraulic system pressure** - 2500 psi, 172 bar
- **Air compressor** -
  - Rotary screw -
    250 cfm, 118 l/s, 150 psi, 10 bar 175
  - * Optional - 350 cfm, 165 l/s, ~~150~~ psi, 10 bar
- **Mud/Air rotary swivel** - top feed, direct drive, double bearing, field replaceable packing
- **Drill stem** -
  Standard (upset joint), 10 ft., 3m, 2⅛" Mayhew Jr. with breakout lugs
  - * Optional (flush joint), 10 ft., 3m, 3½" with 2⅜" I.F. (API)
- **Auger attachments and accessories avail.**
- *** Optional high speed 0-950 rpm coring head**
- *** Optional mud pumps**

RAM 10C

All of the popular and proven components of our successful *RAMAIRE*, less the on-board compressor. A variety of mud pumps and other options available.

RAM 6A

Designed especially for the driller that wants to auger only. Solid core, hollow core, split spoon, hydraulic cat head, much more.

The entire DeepRock Drilling Rig line is available as a skid mount, trailer mount or truck mount. Call the factory direct on our toll-free watts line for a quote on the rig of your specifications.

Our continuing effort to improve this equipment may result in specification changes without notification

DeepRock
MANUFACTURING COMPANY
2200 Anderson Road • Opelika, Alabama 36802 U S A
CALL TOLL FREE 1-800-633-8774
Alabama, Alaska, Hawaii and outside U.S.A. call (205) 749-3377
Telex 593461 DEEPROCK

© 1986 DeepRock Mfg Co

26760

RAM 10

Specifications

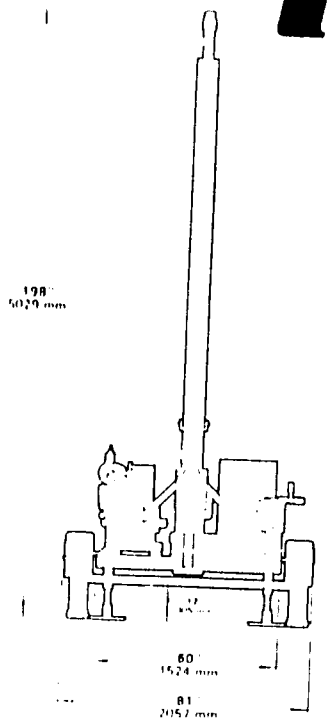

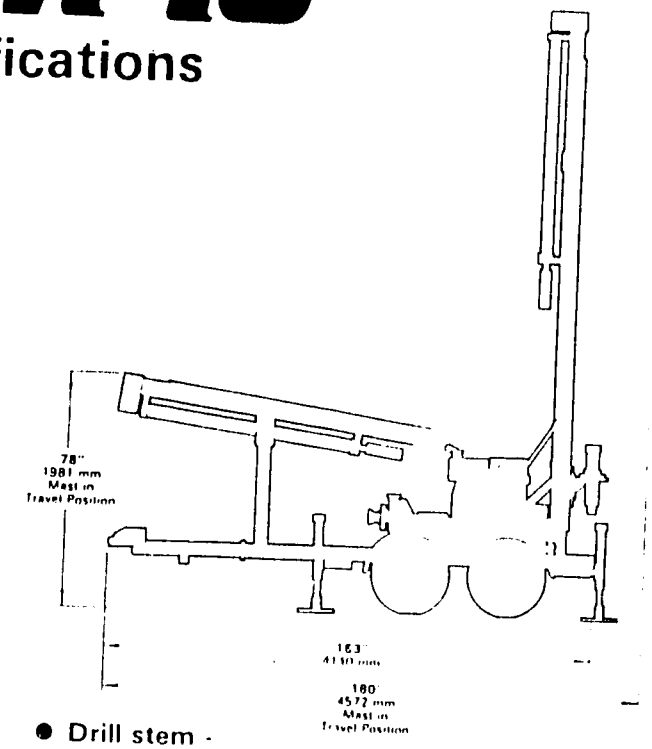

- **Drill head torque** - 7500 lb -in. (26 kg-m)
- **Drill head rotation** - Dual Speed, Bi-Directional. (High 130 rpm) (Low 16 rpm)
- **Drill head travel speed** - 1 2 ft/sec (366 mm/sec)
- **Pull down capacity** - 5700 lb. maximum (anchored) Trailer rear end weight (1500 lb.) (680 kg)
- **Lifting capacity** - 8,500 lb (3855 kg)
- **Engines** - 18 hp (12.7 kW) two cylinder gasoline standard 21 hp (15.6 kW) two cylinder diesel optional
- **Hydraulic pump** - low stage 2 5 gpm (9.46 l/m); high stage, 14 gpm (53 l/m)
- **Hydraulic system pressure** - 2500 psi (172 bar)
- **Hydraulic reservoir** - 15 gal (68 l)
- **Hydraulic filter** -10 micron, clogged filter warning indicator
- **Hydraulic oil** - 150 SSU-95 VI (General purpose)
- **Mud pump** - 2 in (50 mm) suction, 1½ in. (38 mm) outlet, 8½ in (216 mm) impeller w/18 hp Engine (12.7 kW) at.

  2400 rpm - 200 gpm @ 130 ft head (56 psi) 55 m³/hr @ 40 m head

  2800 rpm - 150 gpm @ 200 ft head (86 psi) 41 m³/hr @ 61 m head

  3200 rpm - 75 gpm @ 230 ft head (121 psi) 20 m³/hr @ 85 m head
- **Mud/air rotary swivel** - side feed, direct drive, double bearing, field replaceable packing.

- **Drill stem** -

  Length ..... 10 ft. (3 3m)
  Weight ..... 50 lb. (23 kg)
  Diameter ..... 2⅛ in (60 mm)
  Tool Joint - Mayhew Jr.
  Material ..... Tool joints - 4130 heat treated
  ..... Mid-body - J-55
- **Chain** - BL 634 leaf chain, 17,000 lb. (7700 kg) average tensile strength
- **Trailer** -

  Tongue Weight ..... 150 lb. (68 kg)
  Towing Speed ..... 45 mph (72 km/hr)
  Trailer Construction - 4" x 2" x 3/16" structural tubing
  Tire size P215/14
  Ball hitch ..... 2 in. (50 mm)
  Hitch actuated hydraulic brake
- **Dimensions** -

  Length ..... 163 in. (4140 mm)
  Width ..... 81 in. (2057 mm)
  Height ..... 78 in. (1981 mm) travel position
  ..... 198 in. (5029 mm) drilling position
  Weight ..... 3970 lbs. (1800 kg)
- **Options**
  - Down-the-hole hammers
  - Mast extension w/winch
  - Hydraulic cat heads
  - Foam pumps
  - 2x3 Mud pump w/31 hp diesel engine
  - Lights
  - Other options quoted to purchaser's specifications

**Our continuing effort to improve this equipment may result in specification changes without notification.*

DeepRock
MANUFACTURING COMPANY
2200 Anderson Road • Opelika, Alabama 36802 U S A
CALL TOLL FREE 1-800-633-8774
Alabama, Alaska, Hawaii and outside U S A call (205) 749 3377
Telex 593461 DEEPROCK

© 1986 DeepRock Mfg. Co

354607

DEEPROCK, INC.
2200 Anderson Road
Opelika, AL 36802
205-749-3377
1-800-633-8774

PROFORMA INVOICE

Mr. Ralph E. Preble
TO
.
USA

Date: October 24, 1986
Valid Until: January 24, 1987
Salesman: R J Deane

Our reference no. P8701-B
Your reference no. Telecon

****

COMPONENT	QUANTITY	PRICE EACH	TOTAL PRICE	
RAMAIRE - 350/150	1	69995.00	69995.00	69 995
R.A.M. 10 DRILL STEM	35	179.00	6265.00	
R.A.M. 10 AUTOMATIC BREAKOUT	1	1095.00	1095.00	1095
DRAG BIT- 4"	1	129.00	129.00	
DRAG BIT-6"	1	195.00	195.00	
DRAG BIT-8"	1	285.00	285.00	
ROLLER CONE-4" WITH SUB	1	495.00	495.00	
4" AIR DRILLING PKG-COMPLETE	1	6895.00	6895.00	
ONE YEAR SPARE PARTS KIT	1	5000.00	5000.00	
QUIK-GEL (50 LB BAG)	4	25.00	100.00	
EZ-MUD (5 GALLON CAN)	2	150.00	300.00	
QUIK-FOAM (5 GALLON CAN)	2	75.00	150.00	
ROCK DRILL OIL (5 GALLON CAN)	1	75.00	75.00	
KOPR-KOTE THREAD LUBE (1 LB)	1	9.50	9.50	
FOAM PUMP PACKAGE-COMPLETE	1	1525.00	1525.00	1,525

F.O.B. Factory Price 92513.50

Total excluding auxiliary equipment 72,615

DEEPROCK, INC.
2200 Anderson Road
Opelika, AL 36802
205-749-3377
1-800-633-8774

PROFORMA INVOICE

TO
Mr. Ralph E. Preble
USA

Date: October 24, 1986
Valid Until: January 24, 1987
Salesman: R J Deane

Our reference no. P8701-A
Your reference no. Telecon

****

COMPONENT	QUANTITY	PRICE EACH	TOTAL PRICE	
RAM 10 DIESEL BASIC	1	23995.00	23995.00	23,995
51HP DIESEL PUMP 2X3 (1.875)	1	9995.00	9995.00	9995
R.A.M. 10 DRILL STEM	35	179.00	6265.00	
R.A.M. 10 AUTOMATIC BREAKOUT	1	1095.00	1095.00	1,095
DRAG BIT- 4"	2	129.00	258.00	
DRAG BIT-6"	2	195.00	390.00	
DRAG BIT-8"	2	285.00	570.00	
ROLLER CONE-4" WITH SUB	1	495.00	495.00	
ROLLER CONE-6" WITH SUB	1	895.00	895.00	
4" AIR DRILLING PKG-COMPLETE	1	6895.00	6895.00	
SPARE PARTS KIT, ONE YEAR	1	5000.00	5000.00	
QUIK-GEL (50 LB BAG)	4	25.00	100.00	
EZ-MUD (5 GALLON CAN)	2	150.00	300.00	
QUIK-FOAM (5 GALLON CAN)	2	75.00	150.00	
ROCK DRILL OIL (5 GALLON CAN)	1	75.00	75.00	
KOPR-KOTE THREAD LUBE (1 LB)	1	9.50	9.50	
FOAM PUMP PACKAGE-COMPLETE	1	1525.00	1525.00	1,525.

F.O.B. Factory Price 58012.50

Total excluding auxiliary equipment 36,610

APPENDIX G

Canterra Literature

CANTERRA ENGINEERING LTD.

#7, 3610 - 29th STREET N.E., CALGARY, ALBERTA, CANADA T1Y 5Z7
TELEPHONE (403) 291-0650 TELEX 03-821214

January 7, 1987

Camp Dresser & McKee
1 Center Plaza
Boston, MA
02108

Attention: Mr. Ralph Preble

Dear Mr. Preble:

RE: WATER WELL DRILLS

Thank you for calling back, I'm not sure what happened to your last letter, however this one should bring you up to date. As discussed our new CT371 could be well suited to your prospect in South America, as it has the capacity to reach 200 to 300 foot holes, yet is small enough to be towed by a small local truck (drill weight approximately 4000 lbs). The CT371 is basically our CT300 rig (see attached) with an integral air compressor. The CT371 also has a simplified anchor system which allows the full 6000 lbs of downpull force to be used. I'll outline a quotation below.

CT371 AIR DRILL PRICE QUOTATION

CT371 standard drilling rig complete with the following:

- hydraulic rotary top drive 1620 ft/lbs torque
- 0-95 rpm infinitely variable
- 6000 pounds pullback/pulldown
- hydraulically raised mast
- 2300 lb, mast mounted winch with 120 feet of 5/16 inch wire rope
- stroke for 10 foot drill stem
- swing aside, locking top drive for running casing, sampling tools, setting pumps, etc.
- power from Deutz diesel engine
- 450 cfm x 190 psi rotary air screw compressor

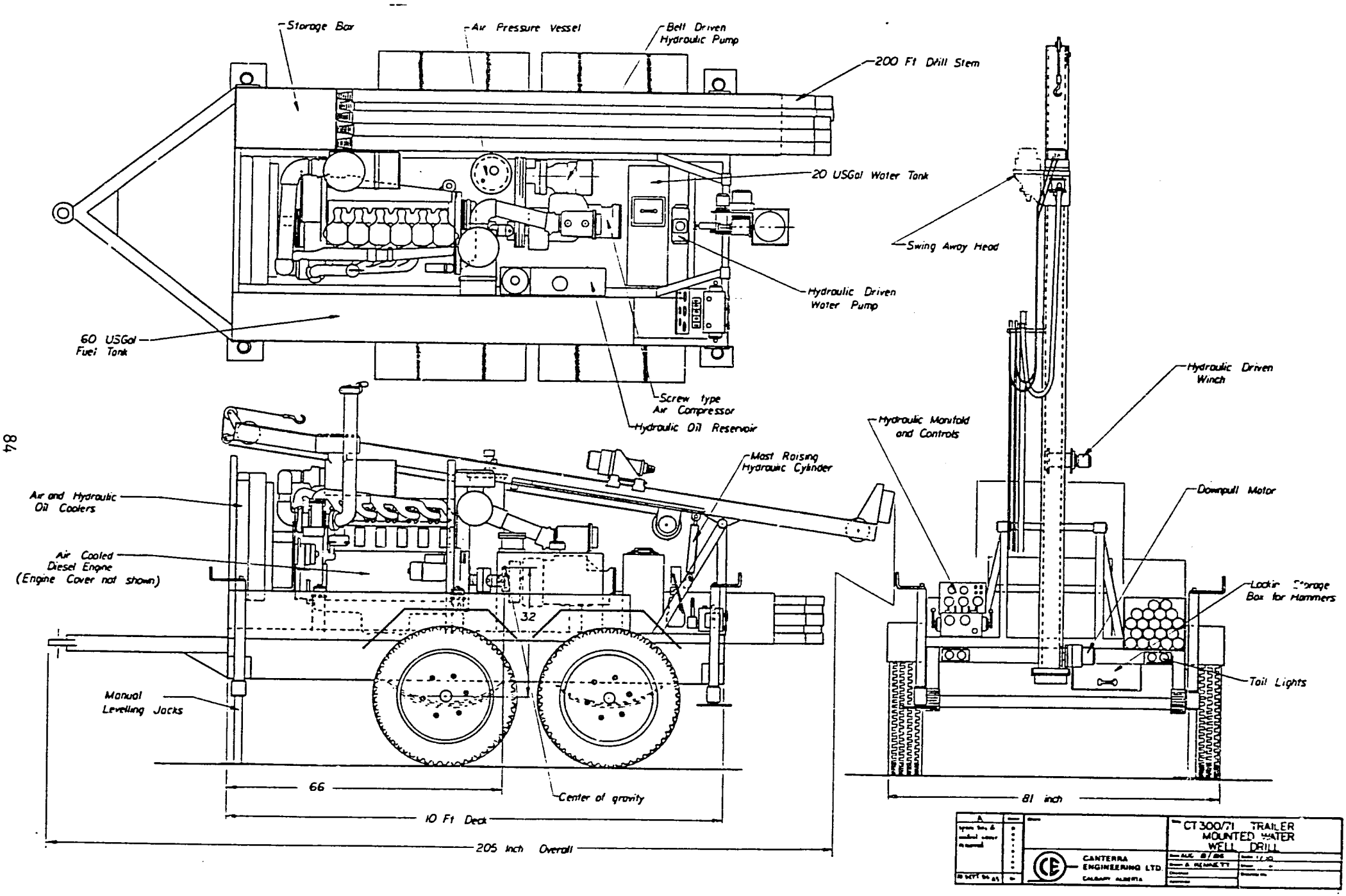
Storage Box
Air Pressure Vessel
Belt Driven Hydraulic Pump
200 Ft Drill Stem
20 USGal Water Tank
Swing Away Head
Hydraulic Driven Water Pump
60 USGal Fuel Tank
Screw type Air Compressor
Hydraulic Oil Reservoir
Hydraulic Manifold and Controls
Hydraulic Driven Winch
Mast Raising Hydraulic Cylinder
Air and Hydraulic Oil Coolers
Downpull Motor
Air Cooled Diesel Engine (Engine Cover not shown)
Locking Storage Box for Hammers
32
Tail Lights
Manual Levelling Jacks
66
Center of gravity
81 inch
10 Ft Deck
205 Inch Overall
CT 300/71 TRAILER MOUNTED WATER WELL DRILL
CANTERRA ENGINEERING LTD.
CALGARY ALBERTA

- integrated hydraulic control manifold, with all necessary controls, gauges, etc.
- 4 GPM @ 250 psi foam injection pump, 20 gallon tank
- pipe rack for 15 lengths of 10 foot 3 inch O.D. drill pipe
- four manual, screw type outriggers
- night light package
- all mounted on rugged steel tandem axle trailer

Price ... $56,550.00 U.S. Funds

Optional Accessories

- mission 1 x 1 1/2" centrifugal mud pump with mounting assembly, delivery hose and belt to drill engine

Price ... $ 1,790.00

- mast assembly for running 20 foot casing

Price ... $ 600.00

Note: If you can get by with less air, we also have a CT371-A which has 300 cfm x 220 psi. With all other specifications as noted, the price of this drill drops to $53,050.00 U.S. funds.

Now I'll outline a quotation for a higher performance truck drill. This drill is light enough to be mounted on a single axle truck, yet powerful enough to drill deep holes.

CT311 AIR DRILL PRICE QUOTATION

One (1) only Canterra model CT311 drill rig, truck mounted, complete with the following:

- hydraulic rotary top drive, 3000 ft/lb of torque (Note: torque up to 4650 ft/lbs - 100 rpm is available at no increase in price)
- 0-150 rpm, infinitely variable top drive
- swing out top drive for handling casing or direct access for winch line
- up to 10 3/4 inch casing capacity
- 20,000 pounds pull up and down force

- rotary screw air compressor for 550 cfm up to 220 psi, 640 cfm up to 160 psi
- 8000 pound drawworks on single line, or 16,000 pounds with travelling block, 240 or 120 feet per minute
- 10 USGPM foam injection pump, 500 psi discharge
- all hydraulic operation with manifolded valve arrangement and single hydraulic pump
- operator's console with all necessary controls, gauges, etc.
- long stroke to accomodate 20 foot drill pipe and casing
- night light package
- pipe rack for 24 lengths of 4 inch drill pipe, 20 foot long
- secure storage cabinets for tools, supplies, drilling accessories and welding equipment
- 200 U.S. gallon capacity water tank
- four hydraulic outriggers mounted on frame, controlled from console
- all power from truck engine through power take-off and transfer case
- all mounted on G.M.C. Top Kick Series 7000 single axle truck, 250 HP Cat diesel engine

Price ... $133,850.00 U.S. Funds

* Price includes; - delivery to export port

Options/Accessories

- Welder

  Hydraulically driven 200 amp DC welder/4.5 K.V.A. generator, cables included

  Price ... $3,800.00

- Oiler

  Positive displacement air operated, pump type

  Price ... $1,350.00

- Pipe Loader

  Canterra's "Can-Load" system includes special winch, plug and loading arm

  Price ... $2,400.00

- Pipe Spinner

  Canterra's "Can-Spin" system includes a special breakout wrench that spins the pipe after the joint is broke

  Price ... $2,000.00

- Mud Pump

  3x4 centrifugal magnum pump, mechanical drive

  Price ... $6,600.00

- Powered Top Drive Swing Out

  Hydraulically operated, swing out top drive with lock in or out position

  Price ... $2,000.00

- Pulse Pump

  For metering foam injection into water injection line

  Price ... $ 570.00

- Pipe Elevator

  A "Quick Plug" equipped to be remote release by top drive

  Price ... $ 350.00

Canterra also offers a complete range of other accessories such as; drill pipe, downhole hammers, bits, subs, fishing tools, stabilizers, etc. Please let me know if you require a quote on any other specific item.

The final drill I'll outline is our standard CT300. This drill could be an advantage because the drill and compressor are separate. Therefore they individually weigh less. For transport on small ferries or similar problems, this could be important.

CT300 standard drilling rig complete with the following:

- hydraulic rotary top drive 1200 ft/lbs torque (1620 ft/lbs option)
- 0-125 rpm infinitely variable (0-95 with optional torque)
- 6000 pounds pullback/pulldown
- hydraulically raised mast
- stroke for 10 foot drill stem
- swing aside, locking top drive for running casing, sampling tools, setting pumps, etc.

- power from Lister 45 Hp diesel engine
- integrated hydraulic control manifold, with all necessary controls, gauges, etc.
- pipe rack for 15 lengths of 10 foot 3 inch O.D. drill pipe
- four manual, screw type outriggers
- all mounted on rugged steel skid frame

Price ... $23,000.00

Optional Accessories

- 2300 pound, mast mounted winch with 120 feet of 5/16 inch wire rope, controlled from driller's console

  Price ... $1,650.00

- Mission 1 x 1 1/2" centrifugal mud pump with mounting assembly, delivery hose and belt to drill engine

  Price ... $1,790.00

- mast assembly for running 20 foot casing

  Price ... $ 600.00

- high torque rotary head, up to 1620 ft/lbs of torque

  Price ... $ 750.00

- tandem trailer with tie downs and running lights

  Price ... $2,400.00

- self propelled hydraulic trailer, highway towable with all connections

  Price ... $4,600.00

- water injection system, 4 gpm @ 250 psi and a 20 gallon storage tank

  Price ... $1,500.00

- auxilliary rotary air compressors (as shown on pamphlet)

220 cfm x 220 psi (Cummins diesel engine)	$23,700.00
275 cfm x 220 psi (Cummins diesel engine)	$26,400.00
450 cfm x 190 psi (Deutz diesel engine)	$35,600.00

I hope the above answers some of the questions you had. It may also be of interest to you that Canterra has exported equipment into (18) overseas countries and we provide on-site set up and training anywhere in the world. Thanks again for your call, I hope we can put some equipment in South America for you.

Yours truly,

CANTERRA ENGINEERING LTD.

H.G. (Howard) Jackson
Vice-President Sales

HGJ/co
Enclosures: (2) CT311, (2) CT311M, (2) CT300, (2) CT371, (1) Corporate

CT300 HEAT PUMP DRILL

The **CT300** is norminally rated to 300 feet and can handle casing sizes up to 6 inch diameter. Specifications on air compressor, rotary torque, pullback or other components can be upgraded by special orde

Specifications

Weight	—	2125 lb
Length	—	88 inches
Width over Jacks	—	59 inches
Height on Jacks	—	88 inches, mast down
Engine	—	45 HP Lister Diesel
Rotary	—	14,400 in-lb (1200 ft-lb)/125 RPM
Optional Rotary	—	19,400 in-lb (1620 ft-lb)/85 RPM
Pullup/down Force	—	6000 lb maximum
Hydraulic Pump	—	Variable displacement load sensing 30 US GPM/3000 psi
Drill Controls	—	By integrated hydraulic control manifold
Stroke	—	For 10 foot pipe changes
Pipe Rack	—	15 lengths of 10 foot by 3 inch diameter
Levelling	—	Four screw jacks, hydraulic legs optional
Swing Out Head	—	Top drive pivots sideways to run casing or tools on winch line
Swivel	—	For mud, air or foam drilling

OPTIONS

Winch A	—	Line pull 2300 lb at 80 fpm with 120 feet of 5/16 wire rope.
Winch B	—	Line pull 1000 lb at 160 fpm with 200 feet of 1/4 wire rope.
Water Injection	—	Up to 4 GPM at 250 psi with 22 gallon water injection tank
Mud Pump	—	Centrifugal type driven by drill engine with declutch
	—	140 US GPM/145 psi
Air Compressor	—	Separate package, oil flooded screw type
	—	275 cfm, 220 psi
Gasoline Engine	—	CT300G has 20 HP engine and separate mud pump
Development Air	—	Hydraulically driven from rig engine 60 CFM at 50 psi,
	—	30 cfm at 150 psi
Self Propelled Trailer	—	Road legal for towing by 3/4 ton truck
	—	Powered by drill hydraulics for maneuvering in yards
	—	Complete with sling gear and drill tiedowns
	—	Width 72 inches
	—	Weight 600 lb
Tandem Trailer	—	Similar to self propelled trailer except tandem axles
Angle Drilling	—	Mast slides to contact ground
Mast Extension	—	For handling 20 foot lengths of casing
Capstan	—	For light hoisting and soil sampling

OTHER CANTERRA PRODUCTS:

Helicopter portable drills, people portable drills, off-road vehicles, water well drills, blasthole drills, forestry management equipment, compressors (50 cfm to 1500 cfm), heliportable and wheeled power-line construction equipment, and custom engineering services.

CANTERRA ENGINEERING LTD.

3610 · 29th Street N.E., Calgary, Alberta, Canada T1Y 5Z7 • Telephone (403) 291-0650 • Toll Free from U.S. 1-800-661-9190 • Telex 03-821214

APPENDIX H

Simco Literature

SIMCO

SOUTHERN IOWA MANUFACTURING CO.
DRILLING PRODUCTS DIVISION
BOX 448 • OSCEOLA, IOWA 50213
PHONE 342-2166 (AREA CODE 515)

March 17, 1987

Mr. Ralph Preble
Camp, Dresser & McKee
1 Center Plaza
Boston, Mass. 02108

Dear Mr. Preble:

This letter and enclosed specifications are in response to our recent phone conversation wherein we discussed a trailer mounted drill.

My understanding of your requirements is as follows:

1) Mud rotary drilling, 10" diameter hole, 120 to 140 feet.

2) Down the hole hammer drilling, 5-1/2" diameter hole, 200 to 250 feet.

3) Trailer - tandem axle, 13,000 lb. GVW trailer.

4) 3 x 4 Centrifugal mud pump.

5) Crown sheave height - adequate to handle 20 foot tool pulls or casing lengths.

6) Drill rig stroke - for 10' rods.

7) Diesel engine on the rig.

8) Pull up of 12,000 lbs.

9) Rotary speed control to provide fine control at slow RPM (10 to 30 RPM for the hammer).

10) Feed rate and bit pressure controls for DTHH and rotary drilling.

In response to your requirements I have enclosed a spec sheet on the SIMCO 5000 WS. The standard specs on the rig are very close to your requirements. We would have to shorten the mast to provide an approximate 12' net stroke for using 10 foot rods. Further we would have to trailer mount and not

exceed your weight restrictions.

Regarding weights, the base rig with a Cummins or Deutz diesel, and 12' stroke mast would weigh approximately 8,000 lbs. The mud pump complete with suction, discharge, frame, etc. approximately 750 lbs. Depending on how many options are added to the rig it should be possible to meet your weight restrictions on a tandem axle trailer.

Enclosed please find a spec sheet, descriptive flyer, and detailed price sheet on the 5000 WS for your review and information. Because the base rig price includes a fairly elaborate custom made truck bed we should be able to trailer mount the modified rig for approximately the same price.

I would be happy to answer any questions you may have, and thank you for the opportunity to submit information in response to your requirements.

Further, regarding the drill rod we discussed, see Item 11. on the quote sheets. Also, regarding the down hole hammer application you will need to consider water injection and an oil lubrication system for the hammer. These items can be mounted on the rig or the air compressor. It would be much easier to operate if they were mounted on the rig.

Please let me know if I can be of further assistance.

Sincerely,

Robert M. Hettinger
General Manager

RMH/cls
enc.

SIMCO 5000 WS TOP-HEAD ROTARY

SIMCO 5000 WS SPECIFICATIONS

Designed primarily for water well drilling, the quality built SIMCO 5000 WS is sized right for most domestic well requirements. This all hydraulic rig combines convenient tool handling with easy operation and low maintenance. Standard features include a hydrostatic top-head drive, a 23' stroke mast, 10,000 lbs. hoisting winch, hydraulic breakout wrench and a side feed water swivel. The drill can be powered by a gas or diesel deck engine or by a PTO drive. This enables mounting on a wide variety of single or tandem axle trucks. Optional air compressors, mud pumps or top head drives are available along with a wide variety of accessories and tool handling features to satisfy your particular drilling needs.

The 5000 WS is rated to 400' (6"-12" dia. holes) using a centrifugal mud pump; to 900' (3-7/8"-6" dia. holes) using a duplex mud pump. Capacity will vary according to drilling conditions. Ratings are based on engineering specifications and calculations.

POWER SOURCE: PTO or Deck Engine

Std. - Ford 351 CID Gas	
Cont. H.P.	125 H.P. @ 2800 RPM
Oper. RPM	2800 RPM
Fuel Consump.	7.0 gals./hour
Opt. - Deutz F6L912	
Cont. H.P.	102 H.P. @ 2500 RPM
Oper. RPM	2500 RPM
Fuel Consump.*	4.7 gals./hour
- Cummins 63T5.9 Diesel	
Intermittant H.P.	152 H.P. @ 2500 RPM
Oper. RPM	2500 RPM
Fuel Consump.*	4.7 gals./hour

* 3/4 rated continuous load

TOP HEAD DRIVE: (hydrostatic - planetary type)

	Std.	Opt.
Torque Rating	2500 ft. lbs.	5000 ft. lbs.
Rotary RPM	0-200 RPM	0-110 RPM
Pull Down/hold back/pull-up (Infinitely variable)	12,000 lbs.	
Rate of Travel (Max. up or down)	78 ft./min.	
Side inlet swivel (water course)	2-1/2 in.	

NOTE: High Speed Coring Head Also Available

MUD PUMP: (hydrostatic drive)

4 x 3 Mission Magnum Centrifugal	100 GPM @ 180 PSI to 500 GPM @ 120 PSI
5 x 6 Duplex	175 GPM @ 325 PSI
5½ x 8 Duplex	220 GPM @ 330 PSI

DEVELOPMENT AIR COMPRESSOR: (hydrostatic drive)

Type	Rotary Screw
CFM Delivery	230 CFM
Pressure	150 PSI

OTHER SIZES AVAILABLE

WINCHES: (Hydrostatic - planetary type)

MAIN WINCH:	
Bare drum pull	10,000 lbs.
Bare drum line speed	120 ft./min.
Cable(max. spool cap. 250 ft.)	180' of ½"
Safety hook	4½ tons
SAND LINE WINCH: (hydraulic)	
Mean drum pull	2500 lbs.
Mean drum speed	165 ft./min.
Cable-(non-rotating type)	250' of 5/16"

CATHEAD: (hydrostatic)

Hoisting Cap.	2000 lbs.
RPM Range	0-450 RPM
Rope	80' of 1" Manila Rope

MAST:

Overall length	33.0'
Net Drillhead Travel	23.0'
Gross Load Rating	30,000 lbs.

ROD BOX:

Dimensions:	For 20' Rods	18½'L x 15"W x 19"H
	For 15' Rods	13½'L x 15"W x 19"H

Capacity of rod box depends on O.D. and length of rod
Ex. 2-7/8" O.D. Rod x 20' -- 300'
4" O.D. Rod x 20' -- 240'

OTHER OPTIONS AVAILABLE UPON REQUEST

Manufactured in the USA by:
Southern Iowa Manufacturing Company
SIMCO/DRILLING PRODUCTS DIVISION
Box 448 Osceola, Iowa 50213 Ph: (515) 342-2166
Telex: 5106000702 "SIMCO OSCO"

HYDRAULIC PRESSURE RELIEF:

Hydrostatic Rotary Head	5000 PSI
Hydrostatic Drawworks	2500 PSI
Hydrostatic Mud Pump	5000 PSI
Fixed Displacement Circuits	18 GPM - 1800 PSI 10 GPM - 2200 PSI

HYDRAULIC FLOWS @ 2500 RPM:

Variable Volume Piston Pumps		0-40 GPM
Fixed Displacement Pumps	Lg.	18 GPM
	Sm.	10 GPM
Hydraulic Reservoir Capacity		60 gal.
Hydraulic Oil Cooler		45,000 BTU/hr.

WEIGHTS:

Base Rig with Ford 351 gas engine	7,020 lbs.
Drill Platform with hyd. jacks, rod box, tool boxes	4,480 lbs.
Front Jack	265 lbs.
Air Compressor	1,150 lbs.
4x3 Mission Centrifugal Mud Pump	500 lbs.
5x6 Duplex Mud Pump	2,650 lbs.
5½x8 Duplex Mud Pump	5,085 lbs.

Gross rig weights vary from 21,000 lbs. on a single axle truck to 35,000 lbs. on a tandem axle truck depending on options and truck selected.

Recommended Truck Requirements:

Minimum Cab to Axle (C.A.) for 15' Rod Box	102" (single axle)
Minimum Cab to Axle (C.A.) for 20' Rod Box	160" (single axle) 144" (tandem axle)
Minimum G.V.W. Single Axle Truck	26,000 - 27,500 lbs.
Minimum G.V.W. Tandem Axle Truck	42,000 - 44,000 lbs.

NOTES:

SOWS - 3486

Manufactured in the USA by:
Southern Iowa Manufacturing Company
SIMCO/DRILLING PRODUCTS DIVISION
Box 448 Osceola, Iowa 50213 Ph: (515) 342-2166
Telex: 5106000702 "SIMCO OSCO"

2800 HS (HT)

Designed primarily as a geotechnical auger drill the 2800 HS (HT) is rated to 50-60 feet with 3½" I.D. hollow stem augers. This compact rig is ideally suited for monitoring well construction using hollow stem augers.

With the addition of various options, this versatile rig can handle soil sampling, wet or air rotary drilling applications, core drilling, down-the-hole hammer drilling and limited angle hole drilling.

Standard features include high torque top head, hydraulic off-hole, mast extension (pull 10' tool sections with standard mast, 20' tool sections with long mast) and Feed Rate and Bit Pressure Controls.

2800 HS (HT) Specifications

ENGINE	
VG4D Wisconsin Air Cooled	
Continuous H.P.	29.6
RPM @ Continuous H.P.	2400
Fuel Consumption - Full Load	3.9 GPH
Fuel Tank Capacity	15 gal.
TOP HEAD DRIVE	
Torque Rating	3500 ft. lbs.
Rotary	0-120 RPM
Pull Down/Pull Up	6500 lbs.
Rate of Travel - Infinitely Variable Up or Down	0-66 ft./min.
MAST AND EXTENSION	
Standard - for 5' tools - Pull 10'	
Drill head travel - Net Stroke	77"
Overall Length w/Ext. Retracted	148"
Overall Length w/Ext. Raised	222"
Long Mast - for 10' tools - Pull 20'	
Drill Head Travel - Net Stroke	130"
Overall Length w/Ext. Retracted	195"
Overall Length w/Ext. Raised	324"

HYDRAULIC PRESSURE RELIEF	
Rotary Head	5000 PSI
Pull Down	0-1500 PSI
8 GPM Circuit	1800 PSI
18 GPM Circuit	1500 PSI
HYDRAULIC FLOWS	
Variable Volume Pump	0-28 GPM
Auxiliary Pump	
Main Segment	18 GPM
Second Segment	8 GPM
Hydraulic Oil Cooler	20,000 BTU/HR.
WEIGHTS	
Basic Unit	3140 lbs.
For Options Add:	
Cathead	200 lbs.
Slide Base	185 lbs.
Hoisting Winch	135 lbs.
Long Mast	150 lbs.
Extension (long mast)	225 lbs.
Moyno Pump	385 lbs.
Deutz Diesel Engine	166 lbs.

OPTIONS & ACCESSORIES

ENGINE	
Deutz F2L912 Diesel	
Continuous H.P.	27.5
RPM at Continuous H.P.	2300
Fuel Consumption	1.6 GPH
Fuel Tank Capacity	5 gal.
WINCHES (HYDRAULIC)	
Mast Mounting Hoisting Winch	
Capacity	3500 lbs.
Bare Drum Line Speed	80 FPM
Cable (max. capacity) 170' of 3/8" non-rotating	
Wire Line Hoisting Winch	
Capacity	1000 lbs.
Bare Drum Line Speed	450 FPM
Cable (Max. Capacity) 500' of 3/16" air craft cable	
ROTARY DRILL HEADS	
High Speed - Coring Drill Head	
RPM Range	0-700 RPM
Torque (Max.)	420 ft. lbs.
Multiple RPM Drillhead w/2-speed gearbox	
Low 0-106 RPM	0-3600 ft. lbs.
High 0-550 RPM	0-700 ft. lbs.

CATHEAD (HYDROSTATIC)	
Hoisting Capacity	2000 lbs.
RPM Range	0-335 RPM
Drum Diameter	7"
Drum Length	8"
Rope	50' of 1" Manila

PUMPS (FOR DRILLING FLUIDS OR GROUT)

Moyno - Hydraulically Powered		
2L4	0-7.5 GPM	0-120 PSI
2L6	0-31 GPM	0-150 PSI
3L6	0-31 GPM	0-225 PSI
Bean - Hydraulically Powered		
AC410C	0-8 GPM	0-500 PSI
Mission Centrifugal		
1½ x 2	25-125 GPM	100-65 PSI

SLIDE BASE (TRUCK MOUNTING ONLY)	
Travel Length	16"
PTO DRIVE	
Consult Factory for details	

SPECIFICATIONS SUBJECT TO CHANGE WITHOUT PRIOR NOTICE.

Manufactured in the USA by:
Southern Iowa Manufacturing Company
SIMCO/DRILLING PRODUCTS DIVISION
Box 448 Osceola, Iowa 50213 Ph: (515) 342-2166
Telex: 5106000702 "SIMCO OSCO"

2800 HS (HT) TRUCK MOUNTED

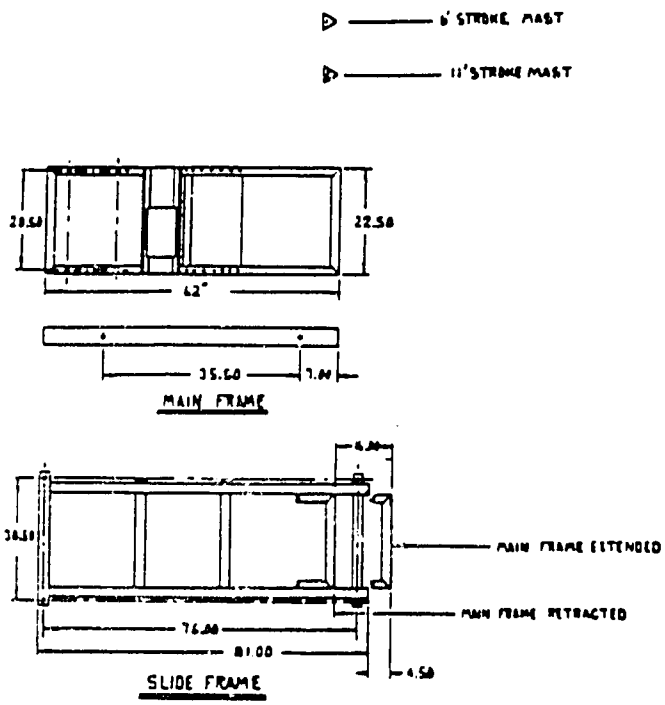

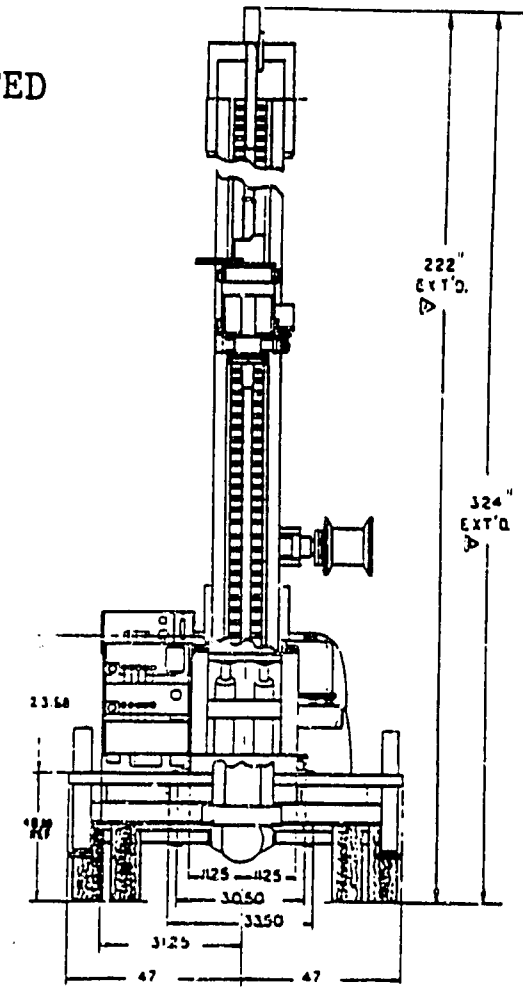

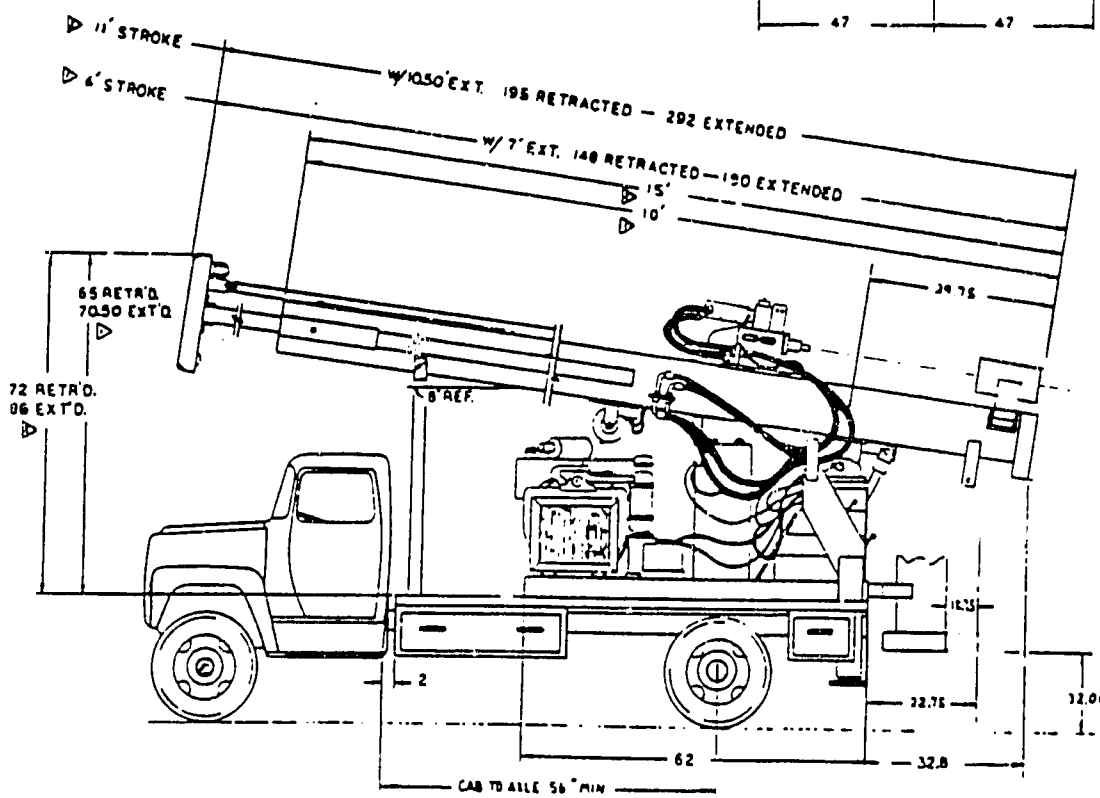

28HS (HT) - 0187

Manufactured in the U.S.A. by
Southern Iowa Manufacturing Company
SIMCO/DRILLING PRODUCTS DIVISION
Box 448 Osceola, Iowa 50213
Phone: 515/342-2166
TLX 5106000702 'SIMCO OSCO'

MODEL 3800TAH TRAILER

DRILLING PLATFORM FOR MODEL 2800HS

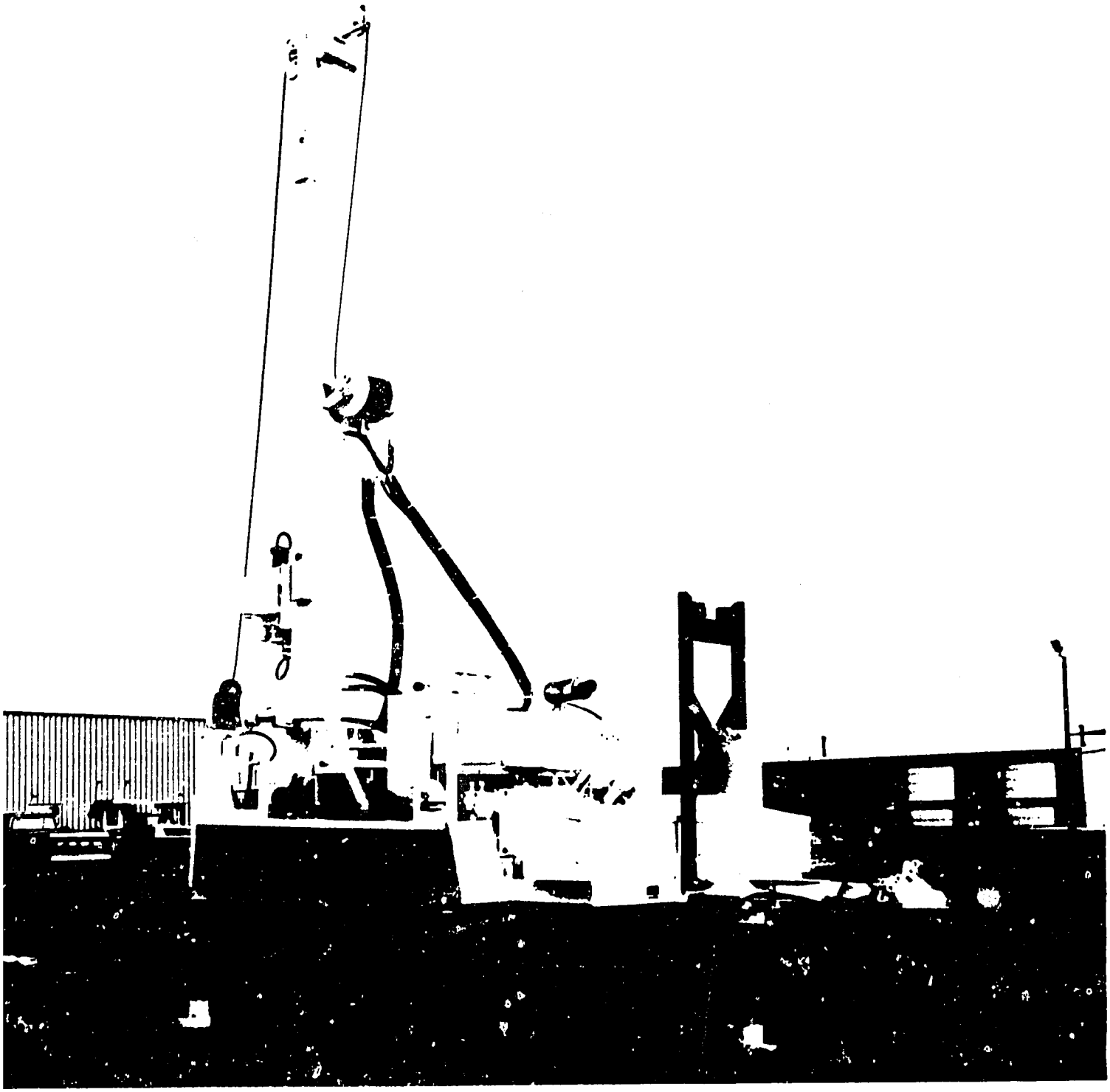

Manufactured in the U.S.A by
Southern Iowa Manufacturing Company
SIMCO/DRILLING PRODUCTS DIVISION
Box 448 Osceola, Iowa 50213 Phone: 515/342-2166
Telex: 478-345 "SIMCO OSCO"

SPECIFICATIONS

SIMCO MODEL 3800 TAH TRAILER

The 3800 TAH is a compact, heavy duty, Tandem Axle Trailer, specifically designed to carry the 2800 HS drill. It is easily towed by a ¾ Ton pick up truck.

OVERALL WIDTH	90"
LENGTH OF TRAILER BED	98"
OVERALL LENGTH (INCLUDING TONGUE)	142"
HEIGHT TO TOP OF FENDERS	33"
GROSS CAPACITY @ 55 M.P.H.	11,000 lbs.
TIRE SIZE	8:00 × 14.5
(RECOMMENDED TIRE PRESSURE-100 P.S.I.)	12 Ply-LOAD RANGE F
NET PAYLOAD RATING	8,775 lbs.

STANDARD EQUIPMENT FEATURES:

- Three 24" Stroke Hydraulic Leveling Jacks, one at each rear corner, one tongue jack
- One Tool Rack for 5' Drill Rod
- One Auger Rack for 5' Auger
- One 12" × 10" × 72" Lockable Tool Box
- Electric Brakes
- 2-5/16" Ball Hitch
- Lights—Stop, Tail and Turning

SPECIFICATIONS SUBJECT TO CHANGE WITHOUT PRIOR NOTICE

Manufactured in the U.S.A. by
Southern Iowa Manufacturing Company
SIMCO/DRILLING PRODUCTS DIVISION
Box 448 Osceola, Iowa 50213 Phone: 515/342-2166
Telex: 478-345 "SIMCO OSCO"

APPENDIX I

Failing Literature

GEORGE E. FAILING COMPANY

January 15, 1987

Mr. Ralph Preble
Camp, Dresser & McKee
1 Central Plaza
Boston, MA 02108

Dear Mr. Preble:

We are pleased to have the opportunity to furnish you with a price quotation on our Model F-5 trailer mounted drilling unit.

We hope that we have included in our proposal all of the equipment that we discussed by phone the past several days however, in the event we did overlook something, or if you should need any additional prices or specifications please do not hesitate to call us.

Very truly yours,

GEORGE E. FAILING COMPANY

W. M. Ball

W. M. Ball

WMB/rb
Encls.
cc: Mr. Montia Rice
C-File

P.O. Box 872 / Enid, Oklahoma 73702 / (405) 234-4141 / Telecopier (FAX) 405-233-6807 / Telex 796524

GEORGE E. FAILING COMPANY
ENID, OKLAHOMA 73702, U.S.A.

QUOTATION

Ralph Preble
Camp, Dresser and McKee
1 Central Plaza
Boston, MA 02108
(617)742-5151

Ref: #0009-87/BB
BB/rb
January 15, 1987

SECTION I

FAILING MODEL F-5 TOP-DRIVE DRILL
TRAILER MOUNTED POWERED BY DECK ENGINE

CAPACITY: The FAILING F-5 is a hydraulically driven top-drive with the capability of an actual drilling program to 500' using 2-3/8" lightweight drillpipe.

POWER UNIT: The unit is powered by a Cummins Model 6BT5.9 6-cylinder diesel engine, includes a 50-gallon fuel tank.

MAST: The mast is 21' 8" overall, constructed of square structural tubing with channel guides for the top-head to travel in and is designed to handle 10' drill pipe. The mast is raised and lowered with two double acting hydraulic cylinders. The mast will accommodate 20' casing.

PULLDOWN: The pulldown and holdback is provided by a hydraulic motor coupled to a planetary gear reduction box with an extended shaft that the pulldown sprockets attach directly on. A static brake is mounted on the reduction box to provide positive holding of the drill string load anywhere the traveling head is stopped. This system will create an actual rating of 10,000 lbs. of pulldown and hoisting capacity. (NOTE: Theoretical pulldown and hoisting capacity rating is 15,000 lbs.).

BREAKOUT: Breakout is accomplished by means of a sleeve mechanism used in conjunction with slips that grasp the drillpipe by lugs welded to the outside of the pipe. Drillpipe is added with the head tilted out while positioned at the lower end of the mast. The pipe is both added and removed by means of the top-head mechanism. Holder for supporting pipe.

SWIVEL: A top-loading water swivel is incorporated into the drill head with 2" water course through the swivel and drill head.

TOP-DRIVE: The drill head is powered by a hydraulic motor coupled to a speed reducing gear box which will generate an actual 2500 ft. lbs. of torque and a maximum speed of 125 RPM. The rotary and pulldown are powered by variable displacement pumps which give infinite controls on speed. All cylinders are powered by a fixed displacement pump. This triple pump arrangement will assure full power to all functions at all times. Includes a 30-gallon oil reservoir.

ENTRIFUGAL PUMP: Complete with drives and controls. Mission 3 x 4 including -1/2" flow line standpipe, foot valve and valves and piping. Flow line mani- olded for connecting an auxiliary air compressor.

47F406 WATER INJECTION SYSTEM: Incorporating a John Bean Model A0411C 35 - 5.5) (6GPM) pump hydraulically driven.

RILL FRAME: Structural steel reinforced frame. Including full length rod ack mounted on the right hand side of the drill to accommodate 10' drillpipe.

YDRAULIC AUXILIARY DRUM: Includes piping and controls, single line pull ,000 lbs. capacity with 0-100 FPM line speed. Complete with adequate wire ine.

OUNTING: Unit mounted on 2-axle trailer, 14-15000 lb. capacity with goose- eck for one ton truck, 12 ft. bed with steel decking, 7:50 x 16 tires, lectric brakes, reflectors and running lights.

'OTAL SECTION I ---------- $72,370.00

SECTION II — OPERATING EQUIPMENT

1.	1	Sub, top-head to 3-1/2" flush joint drillpipe		235.00
2.	1	H10-J14-A, 2" x 14' swivel hose with fittings		255.00
3.	1	H14-M25-D, Suction hose, 4" x 20' with King combination couplings, strainer and quick union		521.99
4.	15 pcs	4-1/2" OD aluminum drillpie, 10' long, .500 wall with 2-7/8" (4-1/2" OD, 2-1/8" ID) API IF steel tool joints with thread protectors	495.00	7,425.00
5.	1	S-658-B bit sub, 2-7/8" API IF box to 3-1/2 API reg. box		119.16
6.	1	S-664-B bit sub, 2-7/8 API IF box to 4-1/2 API reg. box		324.00
7.	1	S-675-B bit sub, 2-7/8 API IF box to 6-5/8" API reg. box		431.82
8.	2	48" aluminum wrenches	179.80	359.60
9.	1	H-175-B hoisting plug with 2-7/8 API IF pin		472.74
10.	4	5-1/2" OD x 2-1/2" ID x 10' long drill collars with API IF box to 3-1/2" API IF pin	926.00	3,704.00
11.	1	S-632-D sub, 2-7/8 API IF box to 3-1/2 API IF pin		203.57
12.	1	S-665-B sub, 3-1/2 API IF box to 4-1/2 API reg. box		228.64

TOTAL SECTION II ---------- $14,280.52

OPTIONAL DRILL PIPE, STEEL AND DRILL COLLARS

A.	3-1/2" OD x 10' drill pipe, 10' long, .300 wall with 2-3/8 (3-3/8" OD x 1-3/4" ID) API IF tool joints with thread protectors		$ 225.00
B. 4 ea	6" OD x 3" ID x 10' long drill collars with 4-1/2 F.H. Box to 4-1/2 API F.H. pin	1,205.00	$ 4,820.00

GEORGE E. FAILING COMPANY
ENID, OKLAHOMA 73702, U.S.A.

QUOTATION

SUMMARY SHEET

TOTAL SECTION I	DRILL UNIT	$72,370.00
TOTAL SECTION II	OPERATING EQUIPMENT	$14,280.52

TOTAL F.O.B. FACTORY, ENID, OKLAHOMA ---------- $86,650.52

FOR OVERSEAS SHIPMENTS - ADD FOR EXPORT PROCESSING, PACKING AND HANDLING ---------- $ 1,299.76

DELIVERY: Approximately 75 to 90 days after receipt of order, subject to conditions beyond our control.

Prices will be held firm for a period of 90 days from the date of this quotation.

PAYMENT TERMS: Cash at delivery, unless prior arrangements are made with our Credit Department.

GEORGE E. FAILING COMPANY Standard Warranty Policy is applicable, see copy attached.

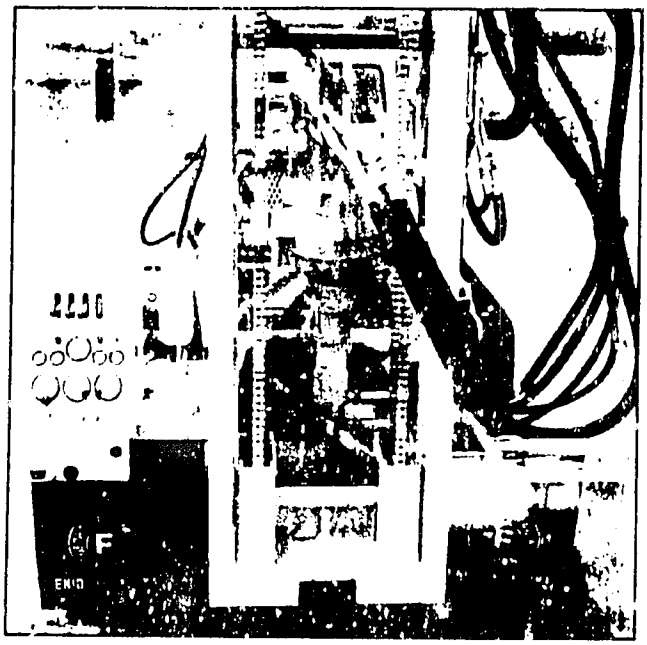

The Failing Model F-5 is a hydraulically driven top-drive drilling rig with the capability of drilling to a depth of 500 feet using 2⅛" light weight drill pipe. The mast is constructed of square tubing with channel guides for the top head to smoothly travel in and is designed to handle 10 ft. drill pipe with 2 feet of overtravel in the upper end. Two double acting hydraulic cylinders make it possible to raise and lower the mast quickly and trouble free. This system will create 10,000 lbs. of pulldown and hoisting capacity. The mud pump is a 4½ x 5 duplex reciprocating pump suitable for heavy-duty slush service, optional mud pumps are available. The pump has a range of piston sizes from 3" to 4½" to match the pumping needs of many types of drilling. One of the many things that make this such a versitile machine is that it is a self-contained unit. All of the components are mounted to a frame that may be mounted on a wide variety of vehicles or trailers. The F-5 is a well developed piece of machinery capable of handling the toughest of drilling conditions and do it well time after time.

Model F-5 Specifications

Rated Capacity	500 ft. depth ..... with 2⅛" lightweight drill pipe
Mast	18' 6" overall length 10,000 lbs. hoisting capacity Raised and lowered by two heavy duty double acting hydraulic cylinders.
Top Drive	0-2500 foot pounds intermittent torque with variable speed, 0-125 rpm. Drill pipe is added with drive at the lower end of the mast. The swivel is a top loading type with a 1½" water course. Continuous operating chains are 1 inch pitch. The top drive is powered by a fixed displacement hydraulic motor.
Mud Pump	Failing L-100-C 4½"x5" reciprocating type pump, belt drive from engine P.T.O.
Pipe Breakout	Sleeve mechanism mounted on the top head is used in conjunction with slips that grasp pipe by lugs welded to the outside of the drill pipe.
Hydraulics	Tandem-variable-displacement-piston-type-pumps provide the hydrostatic power for the top head rotary and the pulldown/holdback drive. These pumps are driven off the front of the engine camshaft and provided power for all the cylinder circuits.
Pulldown/Holdback	A fixed displacement hydraulic motor coupled to a planetary gear reduction and provides a feed rate from 0-100 feet per minute with a pulldown or hoisting force from 0-10,000 lbs. A spring-applied-hydraulic-pressure-released-brake gives positive load holding anywhere the traveling head is stopped.
Power Unit	Cummins model 6BT5.9, six cylinder diesel engine delivers power to all drives.
Control Panel	Located at drillers station, complete with all controls, guages for hydraulic circuitry, and instrumentation for engine.
Crown Assembly	Allows the top head to be retracted into the back of the mast gives an unobstructed access to the center of the drilling hole by the auxiliary line.
Auxiliary Drum	A hydraulically driven planetary winch delivers 0-5000 lbs. of single line pull at 0-100 feet per minute.

George E. Failing Company

2215 S. Van Buren • Box 872 • Enid, Oklahoma 73702
Phone (405) 234-4141 • Cable GEFCO • Telex 796524

• Enid, Oklahoma • Houston, Texas • Largo, Florida • Plainfield, Indiana • Casper, Wyoming • Conyers, Georgia
• Grants, New Mexico • Fresno, California • Grand Junction, Colorado • St. Michaels, Maryland
• Odessa, Texas • New Orleans, Louisiana • Burnsville, Minnesota
• Surrey, England • Edmonton, Alberta • Calgary, Alberta

APPENDIX J

Gus Pech Literature

GUS PECH

Since 1879

March 18, 1987

Camp Dresser & Mc Kee
1 Center Plaza
Boston, MA 02108

Attention: Ralph Preble

Dear Mr. Preble:

Enclosed, please find our quotation for a Gus Pech BANTAM trailer mounted drill with export preparation, FAS Port of Houston.

If the services of a Gus Pech representative is not required in Honduras, you may deduct $2,000 from the unit price, thus your price FAS Port of Houston per unit is $71,813.00 USDLRS.

If you have any questions or wish additional information, do not hesitate to call us.

Very truly yours,

GUS PECH MFG. CO., INC.

Lloyd Hennigs

Lloyd Hennigs

LHH:kjb

enclosures

Gus Pech Mfg. Co., Inc. 1480 Lincoln Street S.W. Le Mars, Iowa 51031 USA Telephone 712-546-4145 Telex 703176

GUS PECH "BANTAM DRILL"

10" tube mast
12' stroke
Ball bearing top hea lide
3" hollow spindle h static/double reduction gear
top head drive,) stepless (60,000 in lbs. torque)
Tophead cross slic 18"
Cable, hydraulic ıder operated pulldown/retract drill head system
(Pulldown w/anc 15,700 lbs./retract 11,780 lbs.)
Pulldown/holdback eed control system
Split guide table with hydraulic rod clamp
Tool/battery box
Single station control console
Cummins Model 4BT3.9 diesel power unit, 100 HP, with 40 gallon fuel tank
2" full course water/air swivel system
Mission 3 x 4 x 13" impeller mud pump
Rotary pump assembly
Hydraulic powered water/foam injection pump
Hydraulic operated break out wrench
GP winch 3000# first layer, headache ball
300 ft. 3/8" non rotating cable, swivel hook
Tool box, above deck
Drill rod bushings, one set
Drill rod adaptor attachment
Standard drill rod rack
4 point hydraulic system
Hydraulic powered anchor system
Trailer: 2 axle, 15,000# rated
Export preparation

LIST PRICE -	$84,733.00	
LESS DISCOUNT - - - - - - - - - - - - - - - - - - -	10,910.00	
NET PRICE FAS PORT HOUSTON - - - - - - - - - - -	$73,823.00	USDLRS

(Gus Pech not responsible for port/storage charges)

QUOTE TO: CAMP DRESSER & MC KEE
1 Center Plaza, Boston, MA 02108
Att: Ralph Preble (617-742-5151)

TERMS AND DELIVERY: To be discussed
QUOTE DATE: March 18, 1987 QUOTE VALID: May 1, 1987

CAMPDRES.QUOTE

GUS PECH "BANTAM" ROTARY/AUGER DRILL
(TRAILER MOUNTED)

	STROKE	12 FT.
*	SPEED	0-110 STEPLESS
*	TORQUE	60,000 INCH LBS.
	DEPTH	1,000 FT.
	PULLDOWN (with anchor)	15,700 LBS.
	RETRACT	11,780 LBS.
	MAST	40,000 LBS.

* (VARIOUS SPEEDS AND TORQUES AVAILABLE)

FEATURES:
- 10" TUBE MAST
- SPLIT GUIDE TABLE WITH HYDRAULIC ROD CLAMP AND REMOVABLE ROD SLIPS
- TOP HEAD DRIVE: 3" HOLLOW SPINDLE HYDROSTATIC/DOUBLE REDUCTION GEAR
- CROSSHEAD SLIDE
- CABLE, HYDRAULIC CYLINDER OPERATED PULLDOWN/RETRACT DRILL HEAD SYSTEM
- PULLDOWN/HOLDBACK FEED CONTROL SYSTEM
- 1000 LB. WINCH
- 2" FULL COURSE WATER SWIVEL
- 3 X 4 X 13 MUD PUMP
- DRILL STEM RACK
- 40 GALLON DIESEL FUEL TANK
- TWO TOOL BOXES
- HYDRAULIC OPERATED BREAK OUT WRENCH
- FOUR POINT HYDRAULIC OUTRIGGER SYSTEM
- SINGLE STATION CONTROL CONSOLE
- OPERATOR SAFETY SHUT DOWN SYSTEM

ENGINE:
- CUMMINS DIESEL, 100 HP, WATER COOLED
- 4 STROKE CYCLE, TUBROCHARGED, DIRECT INJECTION IN-LINE, 4 CYLINDER
- 3.92 L. (239.3 CUBIC INCH)
- INSTRUMENT PANEL WITH TAC/HR METER, OPERATOR STATION MOUNTED
- AUTOMATIC ENGINE PROTECTION SHUT DOWN SYSTEM

TRAILER:
- FRAMEWORK 6" X 2" X .250 WALL TUBING
- 2 AXLE, 15,000 LB. RATED, WITH ELECTRIC BRAKES ON ALL WHEELS
- ALL-WHEEL BRAKE LOCKING SYSTEM FOR DRILLING
- HEAVY DUTY BALL OR PINTLE HITCH
- 12:00 X 16.5 FLOATATION TIRES
- IDENTIFICATION LIGHTS

OPTIONS:
- CATHEAD
- HYDRAULIC POWERED ANCHOR SYSTEM
- VARIOUS WINCHES
- VARIOUS MUD PUMPS
- DRILL LIGHTING SYSTEM
- AUGER GUIDE BUSHINGS
- CASING HAMMER ATTACHMENT
- HIGH SPEED ROTATION HEAD ATTACHMENT FOR CORE DRILLING
- U-JOINT HEAD ATTACHMENT FOR AUGER DRILLING
- MAST SLIDE ATTACHMENT (INCREASES MAST WORK HEIGHT 3 1/2')
- MAST ANGLE POSITION ATTACHMENT

TRUCK, TRACK, ATV, OR SKID MOUNTING
CUSTOMIZING OBTAINABLE

Gus Pech Mfg. Co., Inc. *1480 Lincoln Street S.W.* *Le Mars, Iowa 51031 USA* *Telephone 712-546-4145* *Telex 703176*

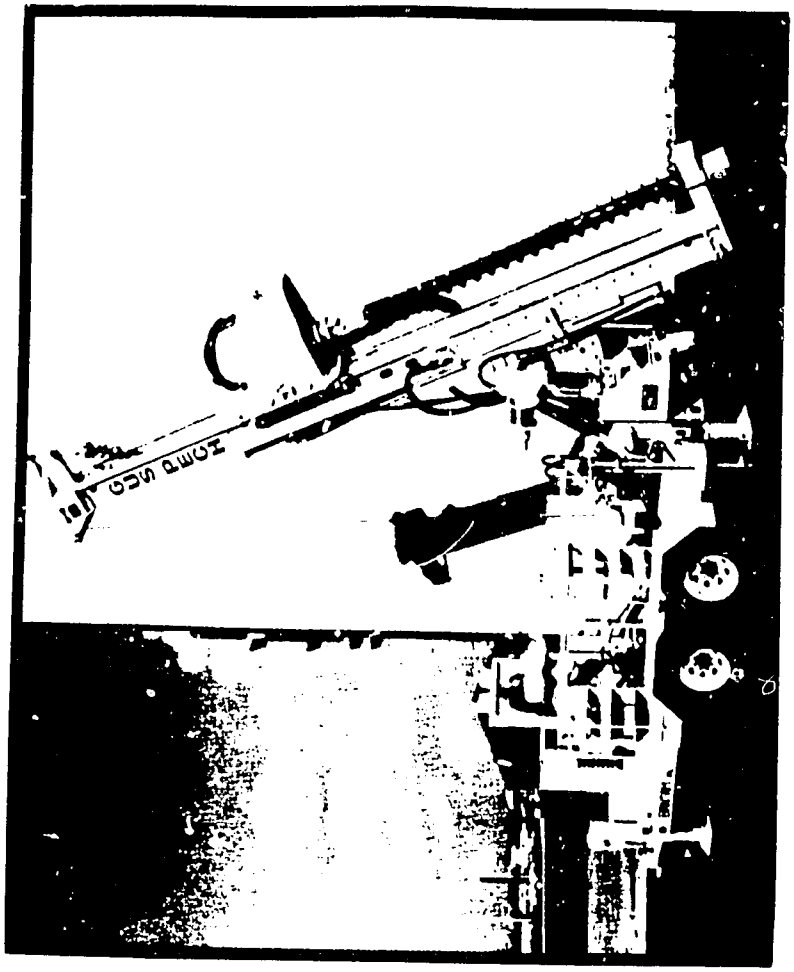

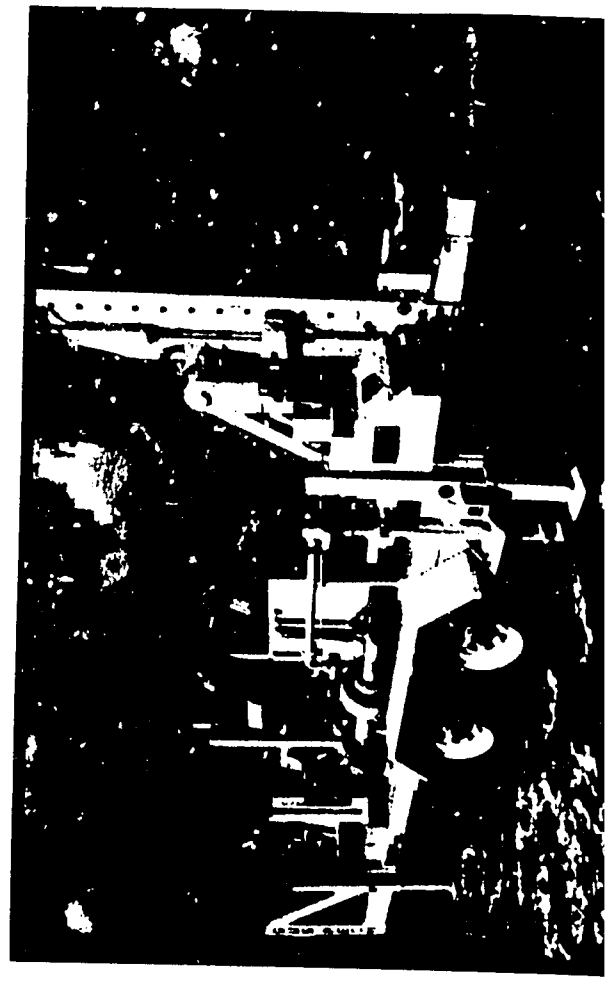

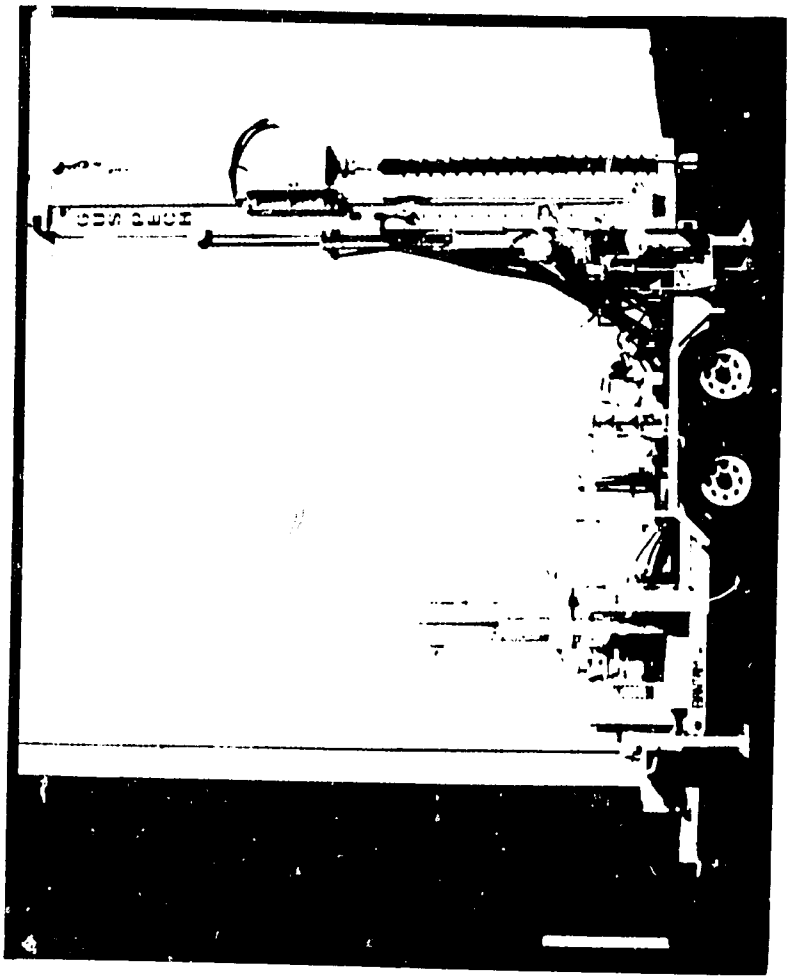

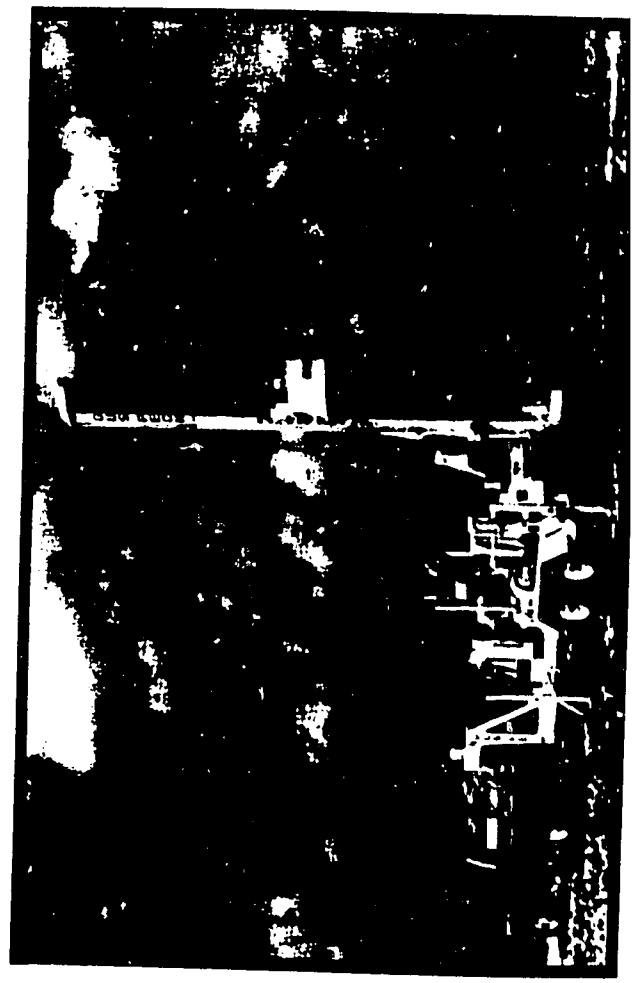

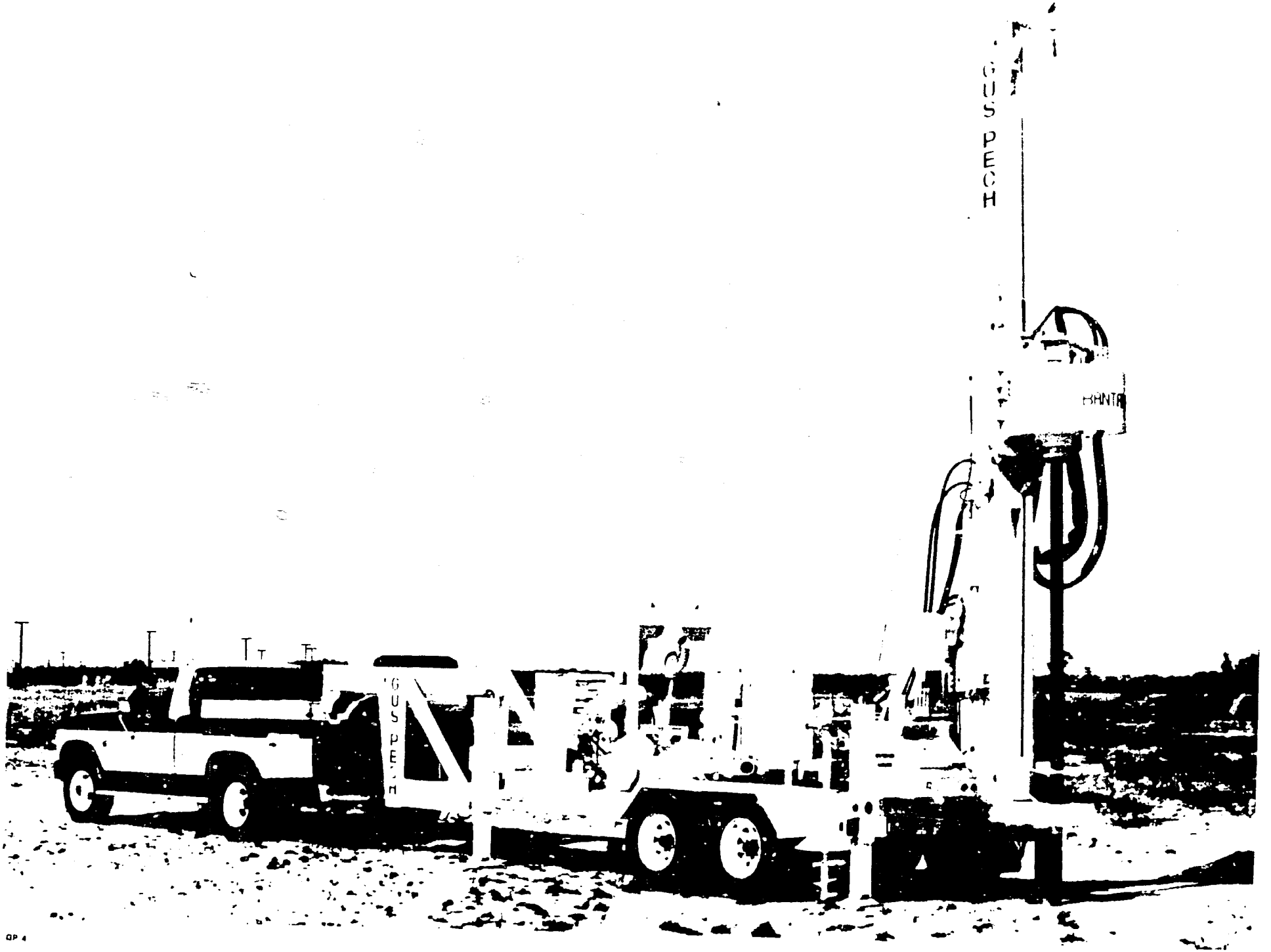
GUS PECH
GUS PECH

APPENDIX K

Mobile Literature

MOBILE DRILLING COMPANY, INC.

Executive Offices & Plant
3807 MADISON AVENUE
INDIANAPOLIS, INDIANA 46227
AREA CODE 317 787-6371

QUOTATION

NUMBER	DATE
68805	03/13/87

THE ABOVE NUMBER MUST APPEAR ON ALL ORDERS AND RELATED CORRESPONDENCE

QUOTATION IS GIVEN IN ANSWER TO	WIRE	LETTER	PHONE	DATE OF REQUEST

To: CAMP, DRESSER & MC KEE
One Center Plaza
Boston, MASS 02108

Attention: Ralph Preble

Delivery:	Terms:	F.O.B.
Shipment 90 days ARO	1% cash discount for 10% deposit w/order; balance prior to shipment	Plant-Indianapolis

ITEM	QUANTITY	DESCRIPTION	UNIT PRICE	AMOUNT
1	1	Mobile Drill Model B-80, basic unit including 10-speed (27-716) rotation head, SLIDRAMATIC, basic control panel for auger, core and rotary drilling, work table for guide and breakout accessories, basic unit for PTO installation, 14' stroke.		$ 37,930.00
2	1	Factory installation on carrier.	NET	1,390.00
3	1	ADD for Cummins 359 CID diesel engine.		16,120.00
4	1	2600 lb. auxiliary hydraulic hoist with 100' of 5/16" cable and hook.		1,700.00
5	1	7000 lb. main hoist with 100' of 7/16" cable and swivel safety hook.		5,380.00
6	1	Crown block assembly required for hoist options.		1,315.00
7	1	Splined floating spindle.		2,010.00
8	1	Air and water system with line oiler.		1,390.00
9	1	Foam flush system.		1,980.00
10	1	Air/water swivel, 2" NPT.		1,025.00
11	1	2" standpipe.		285.00
		CONTINUED ON PAGE 2.....		

We appreciate your valued inquiry.
Further information gladly furnished upon request.
This quotation valid for _____ days from date of quotation.
All other conditions including delivery subject to factory acceptance.

Form MD 812

Respectfully submitted,
MOBILE DRILLING COMPANY, INC.
By _____
Title _____

MOBILE DRILLING COMPANY, INC.

Executive Offices & Plant
3807 MADISON AVENUE
INDIANAPOLIS, INDIANA 46227
AREA CODE 317 787-6371

QUOTATION	
NUMBER 68805	DATE 03/13/8

THE ABOVE NUMBER MUST APPEAR ON ORDERS AND RELATED CORRESPONDE

QUOTATION IS GIVEN IN ANSWER TO	WIRE	LETTER	PHONE	DATE OF REQUEST

• To: CAMP, DRESSER & MC KEE
•
• Page 2.....
•

Delivery:	Terms:	F.O.B.

ITEM	QUANTITY	DESCRIPTION	UNIT PRICE	AMOUNT
12.	1	Hydraulic breakout wrench (mounted on right side of mast).		800.00
13.	1	Guide bushings (2-piece) 4-1/2" O.D. drill pipe.		140.00
14.	1	Manual breakout wrench for bottom rod: P/N 180323-02 For 4-1/2" O.D. drill pipe -- 3-3/4" wrench flats.		170.00
15.	1	3-1/2" API reg. pin.		540.00
16.	1	Pipe elevator for ODEX 165, size 4-1/2" x 10' long.		190.00
17.	1	Hydraulic oil cooler for water-cooled power units.		720.00
18.	1	Mission 4x3 centrifugal pump with 13" impelled and mechanical seal, hydraulic motor driven with flow regulator speed control, complete with pressure line to control panel, bypass valve and pressure gauge, suction line 4" and discharge port 3".		9,500.00
19.	1	P/N 64009-20 2" x 20' pressure hose.		280.00
20.	1	P/N 64003-25 3" x 25' suction hose.		325.00
		CONTINUED ON PAGE 3.....		

We appreciate your valued inquiry.
Further information gladly furnished upon request.
This quotation valid for_____days from date of quotation.
All other conditions including delivery subject to factory acceptance.

Form MD 812

Respectfully submitted,
MOBILE DRILLING COMPANY, INC.
By_____
Title_____

MOBILE DRILLING COMPANY, INC.

Executive Offices & Plant
3807 MADISON AVENUE
INDIANAPOLIS, INDIANA 46227
AREA CODE 317 787-6371

QUOTATION

NUMBER	DATE
68805	03/13/87

THE ABOVE NUMBER MUST APPEAR ON ALL ORDERS AND RELATED CORRESPONDENCE

QUOTATION IS GIVEN IN ANSWER TO	WIRE	LETTER	PHONE	DATE OF REQUEST

• To: CAMP, DRESSER & MC KEE
•
• Page 3.....
•

Delivery:	Terms:	F.O.B.

ITEM	QUANTITY	DESCRIPTION	UNIT PRICE	AMOUNT
21.	1	P/N 3013-0048 3" foot valve/strainer.		71.25
22.	1	Trailer -- 18,000 lb. tandem axle with electric brakes, lights, auger rack, one double unit tool box, safety chains, 10:00 x 15 load range F tires (4), electric brake kit and breakaway safety switch, tow car kit, two rear-mounted hydraulic jacks (24" stroke), and one front-mounted 24" stroke hydraulic jack.		17,510.00
		TOTAL F.O.B. PLANT AMOUNT FOR ONE(1) UNIT.....		100,771.25
		LESS 10% QUANTITY DISCOUNT FOR FOUR OR MORE UNITS.....		10,063.23
		SUB TOTAL.....		90,708.02
23.		Add, for export packaging and shipment to East Coast port, per unit.		1,750.00
24.		Add, if required, for compliment of spare parts to support field operation for minimum one year, per unit.	Approx.	7,500.00

We appreciate your valued inquiry.
Further information gladly furnished upon request.
This quotation valid for 30 days from date of quotation.
All other conditions including delivery subject to factory acceptance.

Form MD 812

Respectfully submitted,
MOBILE DRILLING COMPANY, INC.
By Gray L. Steele
Title Gray L. Steele, Sales Manager

Mobile Drill B-80 — one compact drill rig for all types of formations

The model B-80 is a hydraulically powered long stroke combination auger, air rotary and core drill, designed for multiple drilling functions and for solving modern drilling problems in:

- full-range soil sampling
- mineral exploration
- water well drilling
- construction drilling

The basic B-80 unit is streamlined for simplicity of operation, versatility, minimum of maintenance, and for easy assembly on various drill carriers. Precise control of feed and retract force (hold back), rotation torque and an outstandingly wide rotary head speed range make the B-80 suitable for handling the increasing range of special tools required in the various drilling operations.

Down-the-hole drilling

B-80 is designed for down-the-hole drilling in medium hard to very hard formations. The wide range of combinations between the spindle speed and the feed force in addition to Atlas Copco DTH drills COP 4 and COP 6 and Sandvik Coromant button bits guarantee a high penetration rate and minimum bit wear in all types of formations. Maximum bit size recommended is 216 mm (8½").

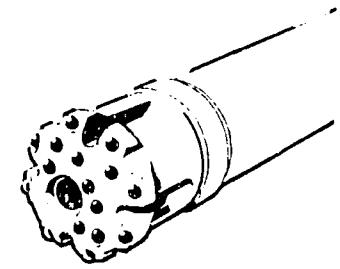

The ODEX drilling method

For down-the-hole drilling through overburden or through fissured formations, B-80 can employ the new ODEX-method. This allows simultaneous casing of the hole as the DTH drill advances, and withdrawal up through the casing upon completion of the hole. B-80 can easily handle ODEX 115 and 165 versions. This allows drilling to be continued below casings with 115 mm (4½") and 165 mm (6½") bits respectively.

In conjunction with the ODEX drilling methods, the B-80 is highly effective for water well drilling in hard to medium hard formations, even in consolidated overburden, as well as for other drilling operations such as anchoring, grouting, testing, etc.

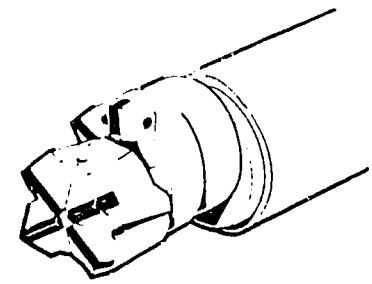

Auger drilling

The B-80's combination of a long feed stroke and high spindle torque puts augers down fast for full range soil sampling operations and construction drilling in overburden and semi-consolidated materials.

B-80 handles continuous flight augers from 114 mm (4½") to 356 mm(14") diameters in sand, clay, slit gravel and similar materials. Thanks to a high feed force, rotary tools up to 127 mm (5") in diameter can be used in soft and medium hard formations.

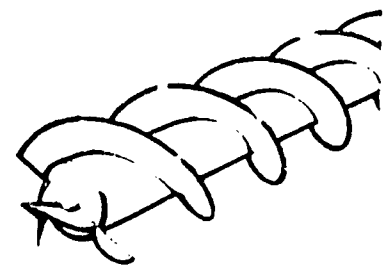

Core drilling

Precision hydraulic control with ten spindle speeds, up to 716 rpm maximum, is ideal for rock coring with conventional or wireline systems using air or water flushing. Up to 146 mm (5¾") diameter coring tools can be used through average to hard formations.

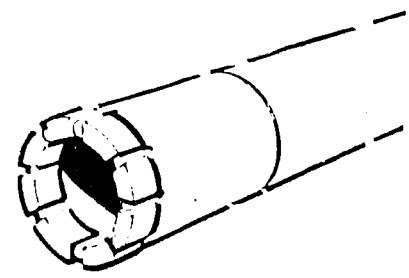

Capacity range

Method	Hole size mm	Hole size in	Hole depth m	Hole depth ft.
DTH with COP 4	115	4 1/2	250	820
DTH with COP 6	165	6 1/2	175	575
DTH with ODEX 115	152	6	75	245
DTH with ODEX 165	212	8 1/4	50	165

Method	Hole size mm	Hole size in	*Hole depth m	*Hole depth ft.
Auger	152	6	75	245
	356	14	30	100
Hollow-stem auger	203	8	45	148
Wireline	NQ		200-300*	600-900*
Rotary	127	5	300	985

* Depending on ground conditions

Hydraulic pump (double sections), capacity	1.57 and 2.27 l/s respectively at 138 bar	21 and 30 Imp. gal/min resp. at 2000 psi
Oil volumes		
Hydraulic system	265 l	58 Imp.gal
Hydraulic tank	257 l	57 Imp.gal
Lubricating oil tank	12 l	2.6 Imp.gal
Air system		
working pre e	18 bar	261 psi
air hose connection	50 mm	2 in
extra outlet connection	25 mm	1 in

Lifting capacity*) at 0.7 m/s (28 in/s)	2270 kg	5000 lb
Pipe elevator		
Drum diameter	89 mm	3.5 in
Drum capacity (8 mm, 5/16" wire rope)	46 mm	150 ft
Hoisting speed*)	0.96 m/s	38 in/s
Lifting capacity*)	1200 kg	2650 lb

*) with empty drum

Weights

B 80 basic unit		
for PTO drive	3000 kg	6600 lb
with separate diesel engine	3640 kg	8000 lb

Torque

rpm up to	27	32	66	96	113	121	204	232	425	716
Nm	8970	7625	3730	2550	2170	2030	1205	1060	580	340
lb ft	6620	5620	2750	1880	1600	1500	890	780	425	250

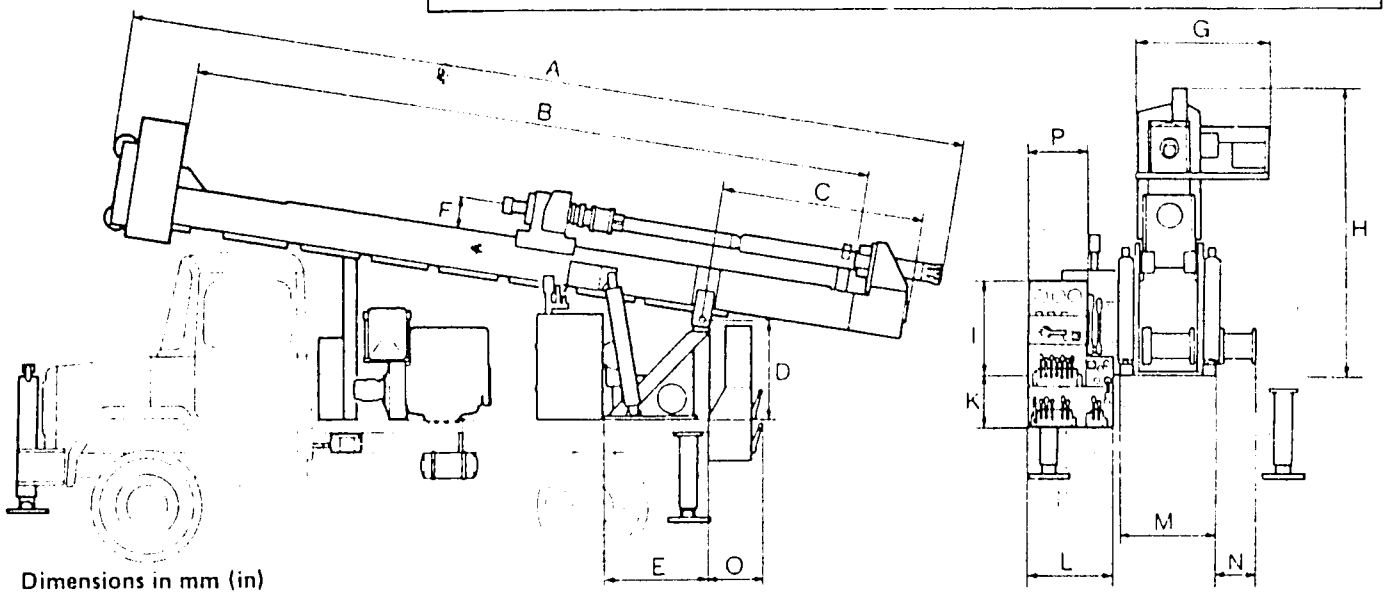

Dimensions in mm (in)

A	B	C	D	E	F	G	H	I	K	L	M	N	O	P
7100	6600	1730	865	940	280	965	2490	830	370	775	790	200	360	535
(279)	(260)	(68)	(34)	(37)	(11)	(38)	(98)	(32.5)	(14.5)	(30.5)	(31)	(8)	(14)	(21)

PATENTS

Slidramatic	United States	US 3 515 228	
Slidramatic	France	7 002 126	BREVETES G.D.G.
Slidramatic	Germany	2.006.724	D.P.B.
Slidramatic	Italy	888 098	
Slidramatic	Canada	867 216	
Slidramatic	United Kingdom	1 240 983	
Lifeline	United States	3.515 824	
Lifeline	Canada	897 226	
Safe-T-Driver	France	7 321 113	BREVETES G.D.G.
Safe-T-Driver	United States	3 889 765	
Safe-T-Driver	Canada	975.345	
Gimbal Coupling	Germany	2 235 929	D.P.B.
Gimbal Coupling	Canada	951 130	
Gimbal Coupling	United States	3.794.127	

Patents pending in other countries

MOBILE DRILL®

MOBILE DRILLING COMPANY, INC.
3307 Madison Avenue, INDIANAPOLIS, INDIANA 46227
Phone (317) 787-6371 TELEX 27352 or 6876017(WUI)

Sales and Service outside the United States through
MOBILE DRILL INTERNATIONAL, INC.

Brochure No. 80C 5M 1 85

Printed in U.S.A.

APPENDIX L

Water Well Education

Water Well Education

The schools listed here all offer higher education programs in water well technology. This catalog is based upon information provided by each institution and is subject to change.

School: Edmonds Community College
2000 68th Avenue West
Lynwood, Washington 98036
(206) 771-1500

Program title: Earth and Rock Drilling

Program coordinator: Al Butler

Program founded: 1979

Curriculum: History of drilling, elementary geology, arc welding, drilling operations I, emergency first aid, well design/geology, equipment design and maintenance, hydrology for drillers, drilling operations II, drilling records management, oxyacetylene for drillers, drilling operations III, summer practicum, internships I, II, III. Number of special in-service training programs are also available throughout the school year

Total course hours: 92 credit hours

Classroom hours: Before internship—30%
During internship—10%

Field hours: Before internship—70%
During internship—90%

Number of quarters needed for graduation: 4 for certificate,* 7 for degree

Equipment used in course: Two cable tool rigs, one auger rig, one top head drive unit, assorted service equipment

Course offered to new students: Each fall

Average number of students in class: 12

Number of graduates in history of course: First two graduates will be in June.

Admission requirements: 18 years of age and interview with director and program coordinator

School's accreditation: Program accredited by Washington State Water Well Drillers Association.

Degree awarded: Associate of Technical Arts Degree, or Certificate of Drilling

Costs:

In-state tuition	$102 per quarter
Out-of-state	$396 per quarter
Books	$ 40 per quarter
Lab fees	$100 per quarter
Tools, equipment	$110 per quarter

*Certificate awarded if student does not take part in internship program

School: J. Sargeant Reynolds Community College
P.O. Box 12084
Richmond, Virginia 23241
(804) 264-3242

Program title: Ground Water Resource Program

Program coordinator: Dave Walz, Assistant Professor

Adjunct faculty: H. M. Townsend, T. C. Uhler Jr

Program founded: 1973

Curriculum: Basic communication skills, orientation, chemistry of ground water, technical mathematics, ground water geology, map and aerial photo interpretation, water well design, physics for ground water, principles of applied psychology, drilling techniques, fundamentals of welding, water well logging, applied accounting, water systems, mechanisms, water systems controls, introduction to technical graphic representation, specifications and standards and records, sociology, coordinated intensive internship.

Total course hours: 66 credit hours

Classroom hours: 50 actual hours

Field hours: 47 actual hours

Number of quarters needed for graduation: 4

Equipment used in course: T-40 Ingersoll Rand, Smeal pump hoist rig, complete ground water testing laboratory, complete mud testing laboratory, complete pump test laboratory.

Course offered to new students: Fall

Average number of students in class: 8

Number of graduates in history of course: 26 (also 11 now in progress)

Admission requirements: High school diploma or equivalent, or 18 years of age; completed application; $5 application fee; official transcripts; health certificate

School's accreditation: Southern Association of Colleges and Universities

School:	Staples Area Vocational Training Institute Staples, Minnesota 56479 (218) 894-2430, extensions 670, 671
Program title:	Water Well Drilling Technology
Program coordinator:	John Martell
Program founded:	1973
Curriculum:	Geology I, ground water and wells, tools, Minnesota geology, well drilling I, hydraulics, well codes, welding I, water systems I, welding II, well drilling II, planning irrigation, water systems, cable tool fishing, advanced geology, water purification, better business, birth of a business, making it in your own business, communication. Other short units on—electric motors, diesel mechanics, automotive mechanics.
Total course hours:	2,100 total—1,050 per year
Classroom hours:	2 hours per day
Field hours:	4 hours per day
Number of quarters needed for graduation:	Two 9 month sessions
Equipment used in course:	One 1976 Gardner Denver 500 mud and air rig, one 1975 T-650 Chicago Pneumatic air rotary top head drive, one 43 Cyclone cable tool rig, one 35 Cyclone cable tool rig, two 20 Bucyrus Erie cable tool rigs, three water trucks, one portable welder
Course offered to new students:	Fall quarter—August 31 starts new quarter.
Average number of students in class:	14-16
Number of graduates in history of course:	5-10 per year
Admission requirements:	Open door. If space available, student may enroll.
School's accreditation:	Minnesota State Department of Vocational Education
Degree awarded:	If attendance is 95% or better and course work has been satisfactorily completed a Diploma of Water Well Drilling Technology is awarded. Certificate to all others.
Costs:*	Minnesota residents $2.13 per day Approximately $130.00 per quarter Out-of-state $5.33 per day Approximately $320.00 per quarter

*Has reciprocal agreement with state of Wisconsin

School:	Sir Sanford Fleming College P.O. Box 8000 Lindsay, Ontario K9V 5E6 (705) 324-9144
Program title:	Resources Drilling Technician
Program coordinator:	Ron Morgan
Program founded:	1976
Curriculum:	Year One—Introductory drilling, surveying, blasting, geology, chemistry, communications, forestry, heavy equipment, cartography, mathematics, welding, geotechniques. Year Two—Exploration drilling,* geotechnical drilling,* well drilling,* blasthole drilling,* advanced blasting, geohydrology, photogrammetry and photo interpretation, engineering geophysics, advanced geotechniques, industrial engineering, engines
Total course hours:	28 a week for 30 weeks in a year
Classroom hours:	25%
Field hours:	75%
Number of quarters needed for graduation:	4 semesters (2 years)
Equipment used in course:	Cable tool rig, rotary rig, mobile 34-B hollow stem auger, two diamond drills, Air Trac compressor.
Course offered to new students:	September of each year
Average number of students in class:	35
Number of graduates in history of course:	50
Admission requirements:	High school graduate or equivalent.
School's accreditation:	Recognized by Ontario Water Well Association, Canadian Water Well Association.
Degree awarded:	Resources Drilling Technician Diploma
Costs:	$440 a year (Canadian)

*A second advanced course is given on all these subjects

Degree awarded:	Certificate of Ground Water Resource Program
Costs:	Virginia resident Full time $114.00 Part time $ 9.50* Out-of-state Full time $380.00 Part time $ 38.00*

*Per credit hour per quarter

School:	Kelsey Institute Box 1520 Saskatoon, Saskatchewan (306) 664-6456
Program title:	Water Sciences Technology with a Ground Water Technology Option
Program coordinator:	John Gilles
Program founded:	1969
Curriculum:	Basic principles of report writing, interpersonal communications, technical mathematics, survey theory I and II, graphics, applied physics I and II, geology, computers, meteorological instrumentation, field measurements I and II, first aid, principles of management, calculus, plan reading, chemistry, hydrology I V, terrain analysis, hydrometrical instrumentation, recreation skills, spring camp, scientific report writing, hydraulics I and II, field camp, water chemistry, statistics, operations instrumentation, ground water geology, instrumentation (installation, maintenance, troubleshooting), rural domestic water and wastewater systems, business management, data handling and recordkeeping, water well construction, instrumentation, water well maintenance and rehabilitation, oral communications, photography, water management, remote sensing, welding.
Total course hours:	2,400
Classroom hours:	75%
Field hours:	25%
Number of quarters needed for graduation:	[illegible] years
Equipment used in course:	A wide variety of surveying, water testing, flow measuring, meteorological and hydrological equipment.
Course offered to new students:	Each fall
Average number of students in class:	27
Number of graduates in history of course:	20 a year, 170 since program began.
Admission requirements:	Grade 12, including algebra and geo trig. Preference to those who have grade 12 chemistry and physics.
School's accreditation:	Saskatchewan Continuing Education
Degree awarded:	Water Sciences Diploma—Engineering Technology
Costs:	Tuition $350 Books 1st $400 2nd $200

School:	Red Deer College Box 5005 Red Deer, Alberta T4N 5H5 (403) 347-1788
Program title:	Water Well Driller—Alberta apprenticeship training
Program coordinator:	Maurice Lewis
Program founded:	January 1979
Curriculum:	First Period—Basic tools and skills, gasoline and diesel engines, hydraulic and air operated equipment, welding, safety, geology, well construction and design, common drilling systems in use, other drilling systems, electrical connections, driver training, well pumping systems. Second Period—Geology, well hydraulics, exploration for ground water, drilling systems, well pumping systems, well development, well maintenance, sanitary aspects of water well drilling, chemical aspects of ground water, well drilling records, geologic map interpretation.
Total course hours:	270 hours (150 first year, 120 second year)
Apprenticeship:	3,600 hours
Classroom hours:	90%
Field hours:	10%
Number of quarters needed for graduation:	Total of 9 weeks of formal education.
Equipment used in course:	Most hands on experience is through co-operating contractor. At school students use facilities of a heavy-duty equipment shop and welding shop. Water systems accessories are used as aids
Course offered to new students:	January of each year.
Average number of students in class:	20
Number of graduates in history of course:	11 have completed apprenticeship program.
Admission requirements:	Be at least 16 years old. Successful completion of grade 9 or equivalent. Must enter into a successful contract agreement with a contractor.
School's accreditation:	Alberta Advanced Education and Manpower, Alberta Water Well Association.
Degree awarded:	Alberta journeyman well driller certificate.
Costs:	No tuition costs to students. Living and travel allowances paid by Canadian Manpower. If not being paid by employer, can receive unemployment compensation.