PN-AAZ-617
55670

A PILOT EXPERIMENT FOR COOPERATIVE COMMUNITY BIOGAS FACILITIES IN RURAL EGYPT INDICATED SOCIAL FAILURE

By : M.M.EL-Halwagi, M.A.Hamad, and A.M.Abdel Dayem
Pilot Plant Laboratory, National Research Centre, Egypt

ABSTRACT

Economies of biogas plants tend to favour community-scale systems. Cultural factors relevant to the target social groups, however, appear to constitute a critical condition for the viability of such systems. Cooperation among beneficiaries may not always be secured to the desired extent. An alternative would be to operate the biogas plant as an independent venture. This calls for establishing a special management scheme with inevitable increasing costs in a system which is already characterized by hazy economies.

Within the context of the National Research Centre (NRC) biogas technology demonstration programme in rural areas of Egypt, community plants were considered in the original plans. The prevelant possessive and individualistic nature of the Egyptian villager, made the direct implementation of community biogas units quite a risky endeavour. To assess the feasibility of such an undertaking, a limited pilot experiment was conducted. A shared biogas unit was established for two neighbouring and highly amicable families in a new-planned Egyptian village. Though all conditions were intentionally selected to favour the success of this limited-sharing facility, social differences ultimately rendered the unit inoperable. Though the back history of the two families had never indicated a single serious incidence of dispute, the close ties between the two families have been almost completely severed as a consequence of the joint biogas facility.

Presented at the International Biogas Workshop on Community Plants, May, 1984, Bremen, Fed.Rep.Germany.

INTRODUCTION

Over the past decade, much attention has been given to the assessment of the prospects of widespread propagation of bicgas technology (BGT) in the rural areas of many developing countries. The evident multi-advantges of BGT were indeed behind such earnest global interest. These advantages include the provision of a renewable and relatively clean energy source; an effective and stabilized organic fertilizer; an appropriate sanitary disposal technique; and an overall improvement in the hygiene and the quality of life of the rural families adopting the use of the technology.

Technical as well as socio-economic constraints call for appraising the use of alternative systems that can minimize the effect of these constraints in various specific situations. Among these alternatives, family size biogas units versus community-scale plants come to the forefront. Each has its merits and demerits; and therefore, the optimum combination must be judiciously established.

RATIONALE FOR AND AGAINST COMMUNITY PLANTS

Most of the starting developing countries efforts centered on developing individual units appropriate for rural areas applications. The obvious advantage of such trend is to tailor designs to the specific and well-defined conditions and requirements of a single rural family. Another advantage is the possibility of handling the major construction requirements with local village capabilities. Such small-scale units, however, are not highly productive. Productivity decreases sharply during the cold season-ironically when mor

energy is needed. Some designs are amenable to excessive scum formation as well as clogging of inlet or outlet ports, and short circuiting. Though these and other problems can be simply solved by incorprating heating and mixing devices, the scale of the operation and its economics would not justify the additional cost. A very striking feature of individual units is that they are only suitable for the better off farmers in the majority of cases. The relatively high initial capital cost, the availability of accessible land within the house premises for building the digester, and the presence of sufficient number of animals to support the unit substrate feeding requirements, all are characteristic of relatively rich peasants. For the remaining majority of villagers living in densely-populated areas, and the poor subsistence farmers, individual biogas units are simply inapplicable. The apparent solution is community biogas plants.

Community biogas plants can have many appealing features. They may offer cost reductions emanating from the economies of scale. High productivity can be achieved through internal heating, and mechanization of the mixing and handling operations. The additional costs can be justified in this case because of the larger scale of operation. Energy uses other than household cooking or lighting can be provided. On account of high biogas production in such large units, electricity can be generated and utilized in agricultural or small-scale industries applications.

On the other hand, community plants may not be capable of meeting the requirements of the villages from the standpoints of local manpower skills and socio-cultural patterns. The more demanding construction needs can be beyond the local capabilities and resources accessible in rural areas. Lack of voluntary cooperation among the community-plant beneficiaries can be a major stumbling block; taking

into account the multifaceted involvements encompassing provision of substrate, participation in the operation and upkeep of the plant, as well as equitable distribution of the biogas and slurry products. Appointment of full-time staff to manage the plant would considerably add to the operating cost and would not automatically ensure smooth interaction with the users even with the enactment of regulatory rules and procedures. If the distance of the community plant is relatively long from the beneficiary rural settlement, the sanitation advantage may be completely lost. Finally, the increased cost of handling and distribution systems, may more than offset the decrease in the unit cost accrued from the larger-scale factor.

THE NATIONAL RESEARCH CENTRE BIOGAS PROJECT

The project is entitled "Development and Application of Biogas Technology in Rural Areas of Egypt". It was officially inaugurated in 1978. It is a sub-project of the Science & Technology Project sponsored by the U.S.AID under the auspices of the Academy of Scientific Research and Technology (ASRT), and is executed by the NRC.

The biogas project belongs to a group of projects called demonstration projects. These types of projects are characterized by being multidisciplinary, multiphased and entail R&D as well as field demonstration of appropriate technologies that can be of significance to national development.

The overall objective of the Project is to assess, on the basis of an integrated R&D, technology transfer and field demonstration program, the limits and conditions of technical feasibilty, social acceptability and economic viability of Biogas Technology (BGT) in the rural setting of Egypt.

Major program goals encompass :

- Study and assess the world-wide potentially prospective technologies.
- Survey the relevant socio-economic features of typical Egyptian villages.
- Transfer, adapt and develop appropriate village-type Biogas technologies and demonstrate them in two types of villages representing the traditional and the new-planned villages.
- Assess the techno-socio-economic feasibility under the local conditions as depicted by village demonstrations.
- Carry out, through an inter-disciplinary team, whatever supportive studies that are needed to accomplish the individual programme goals and thus the project objective.

The project is multidisciplinary in nature. It covers the domain of : engineering, microbiology, pollution control, fertilizer evaluation, parasitology, sociological studies, and techno-economic assessments..

The R&D activities of the various project disciplinary groups have been well documented in the project reports[1] and published papers[2-10]. Demonstration units of the household size as well as large scale type have been established in three villages as well as the NRC extension area[11-20]. A lot of engineering developments have been introduced in the Indian and Chinese models. In addition, modifications have also been made in the animal sheds by converting the soil floor into a concrete one for cleaner operation and direct feeding. In many cases the digester is connected directly to a latrine, and a greenhouse effect is created around the unit for heating

purposes. The prospects of community plants have been investigated on a pilot scale and have proven to be very slim on account of social differences as will be described in more detail in the last section of this paper.

The latest NRC unit is a 50-cu.meter in size attached to a poultry rearing farm[18]. It is an Egyptian design, and is provided with internal and external heating systems, slurry and gas circulation, and gas scrubbing. A 3.5-KW gasoline engine-generator has been converted to operate on biogas. Several other gas-use devices, including the gas heaters required for warming up the chicks, have been also modified to work on biogas.

Results of the field work, monitoring and evaluation of the technical performance as well as the socio-economic and environmental factors over the past five years of the project life tend to indicate that biogas technology can be feasible under certain favourable conditions. Taking into account the constraints[21] of lack of space for digester installation, or the insufficient number of animals ownership for a large number of rural families, it is estimated that a maximum of 400,000 units can be established till year 2000 if the appropriate institutional and operational infrastructure can be made available. These include about 25,000 large scale units and cover both the traditional villages and the new-planned communities. Implementation of such programme can supply about 6% of the rural energy needs and a substantial part of the organic fertilizer deficit.

The potential of biogas technology can be stretched by developing new designs that can alleviate the major prevailing local constraints. The NRC is working on two new and prospective designs in this direction (use of auxiliary solar heating in a ready-made minidigester, and dry fermentation type of digesters based mostly on agricultural residues).

THE CASE OF THE PILOT COOPERATIVE FACILITY

As has been mentioned, a joint unit was planned in the second demonstration village (Omar Makram village) to be a pilot experiment for the community-type biogas plant. A modified Indian-type unit was attached to the houses of two neighboring families. Under such limited-scale of cooperation, the various types of technical and social problems that were anticipated to arise, can be noted at a controllable size.

The unit layout with connections to the two sharing houses is shown in Figure 1, and the digester details are depicted in Figure 2. As may be noted, the 10 m^3 digester is made wider and shallower than the original KVIC design to avoid the problem of the high underground water table and the unstable nature of the very loose sandy soil.

Despite the technical success, as manifested by the performance of the unit during the first few months of regular operation (and even till very recently under no feeding conditions), both families stopped operating the unit on account of social differences. Actually, this has always been anticipated by the project leaders on account of the well known, deeply-rooted possessive nature of the Egyptian peasant (a common rural proverb says "a chicken of your own rather than a jointly-owned buffallo").

Differences have arisen on almost every and all aspects of cooperation. These included :

1. The amount of substrate each family would feed every day. Both families suspected that each was holding back more of the dung for making cakes that would be used as a fuel for the backing oven

Of course, both families agreed to make dung cakes to the extent that is only required for baking and so far as it would not jeopardize the biogas generation rate that will suffice both families cooking needs.

2. The extent of feed dilution. Both families were inclined to use more water than specified for optimum digester operation, yet each was blaming the other for the decreasing gas rate. The reason for using more water is that cleaning of the animal-shed newly modified concrete floor would be much easier.

3. Gas utilization. Each family was suspecting that the other is taking more share than its fair share.

4. Running of the unit and handling of the effluent. The work was divided between the two families on a weekly basis. Each claiming that the other was not doing a good job.

5. The ownership of the unit and the land on which it is placed. Each family started to make claims of ownership, because of the extreme importance of land and property in the minds of rural families.

Many attempts have been made to remedy the situation. None has succeeded so far. However, we are still continuing with further ideas. The objective is not to keep the unit running under forced conditions, but rather to exhaust the list of options for the purpose of learning more about possible socio-economic manifestations and possible regulatory actions.

References

1. M.M. EL-Halwagi, "The Development and Application of Biogas Technology in Rural Areas of Egypt," Eleven Progress Reports, National Research Centre, 1979-1984.

2. M.M. EL-Halwagi, "Development and Application of Biogas Technology for Rural Areas of Egypt", Proc.Bio-Energy'80, Atlanta, Georgia, U.S.A., April 1980.

3. A.M. Abdel Dayem and M.A. Hamad,"Design and Operation of Small Biogas Plants", Proc.3rd Miami International Conference on Alternative Energy Sources, U.S.A., December 1980.

4. "Biogas Technology in Rural Areas of Egypt", Bio Energy Directory 1981.

5. F.EL-Gohary and F.Nasr, "Bioconversion of Organic Wastes", 4th Miami International Conference on Alternative Energy Sources, U.S.A., December 1981.

6. S.EL-Hawaary, M.M. EL-Abagy, N.A. Neweigy, "Effect of Biogas on the Survival of Faecal Indicators and Salmonella Typhimurium", Research Bulletin 1604, Faculty of Agriculture, Ain Shams University, October 1981.

7. M.M. EL-Abagy, S.EL-Hawaary, and M.A. Abou EL-Azm, "Survival of Bacterial Indicators and Salmonnella Typhimurium during Methanogensis", Accepted for publication, Bulletin of NRC.

8. L.I. Zohdy and S.M. Badr EL-Din, "Evaluation of Digested Slurry as a Fertilizer", Egypt. J. Microbiol., 18, No.1-2, pp.69-77, 1983.

9. L.I. Zohdy, S.M. Badr EL-Din, and M.A. Khalafallah, "Handling and Storge of the Digested Slurry Produced from the Biogas Digester", Egypt. J.Microbiol., 18, No.1-2, pp.107-114, 1983.

10. L.I. Zohdy and S.M. Badr EL-Din, "Comparison of Biogas Slurry Treatment", Parts I&II, Egypt. J. of Microbiol., 18, No.1-2, pp.115-134, 1983.

11. M.M. EL-Halwagi, "Pilot Demonstration of Biogas Technology in Rural Areas of Egypt". Proc. of National Seminar on Biogas Technology, India, July 9-11 1981.

12. M.M. EL-Halwagi, A.M. Abdel Dayem and M.A. Hamad, "Prefeasibilty Study on Biogas Technology in Rural Areas of Egypt". Conf. on Energy Conservation and Utilization, Cairo, Nov. 1981 (IN ARABIC)

13. M.A. Hamad, M.M. EL-Halwagi, "The Expected Role of Biogas Technology in Rural Areas of Egypt. Energy Considerations". 4th Miami International Conference on alternative energy sources, 198

14. M.M. EL-Halwagi, A.M. Abdel Dayem, M.A. Hamad, "Biogas Technology for Rural Areas of Egypt". Proc. of the First OAU/STRC Inter-African Conf. on Bio-fertilizers, Cairo, March 1982.

15. M.M. EL-Halwagi, A.M. Abdel Dayem, M.A. Hamad, "Village Demonstration of Biogas Technology. An Egyptian Case Study". Natural Resources FORUM, October 1982.

16. M.A. Hamad, A.M. Abdel Dayem, M.M. EL-Halwagi, "Rural Biogas Technology : Effect of Digester Pressure on Gas Rate and Composition", Journal of Engineering and Applied Sciences 2 (1), 49 (19

17. M.A. Hamad, A.M. Abdel Dayem, M.M. EL-Halwagi, "Evaluation of the Performance of Two Rural Biogas Units of Indian and Chinese Design", Energy in Agriculture, 1, 235 (1981-1983).

18. M.M. EL-Halwagi, A.M. Abdel Dayem, M.A. Hamad, "Design and Construction of a New Type of Digester Attached to an Egyptian Poultry Farm", Third International Symposium on Anaerobic Digestion, Boston, U.S.A., 1983.

19. M.M. EL-Halwagi, A.M. Abdel Dayem and M.A. Hamad, "Utilization of Agricultural Village Wastes for Energy Generation and Fertilizer Production", 15th International Seminar, Egyptian Society for Packaging, Nov. 1983 (IN ARABIC).

20. "Egypt-Biogas Technology in Rural Areas", International Bio-Energy Directory and Handbook-1984.

21. M.M. EL-Halwagi, "Towards a National Strategy for the Optimum Utilization of Biomass Energy", The Supreme Council for New and Renewable Energy, July 1982.

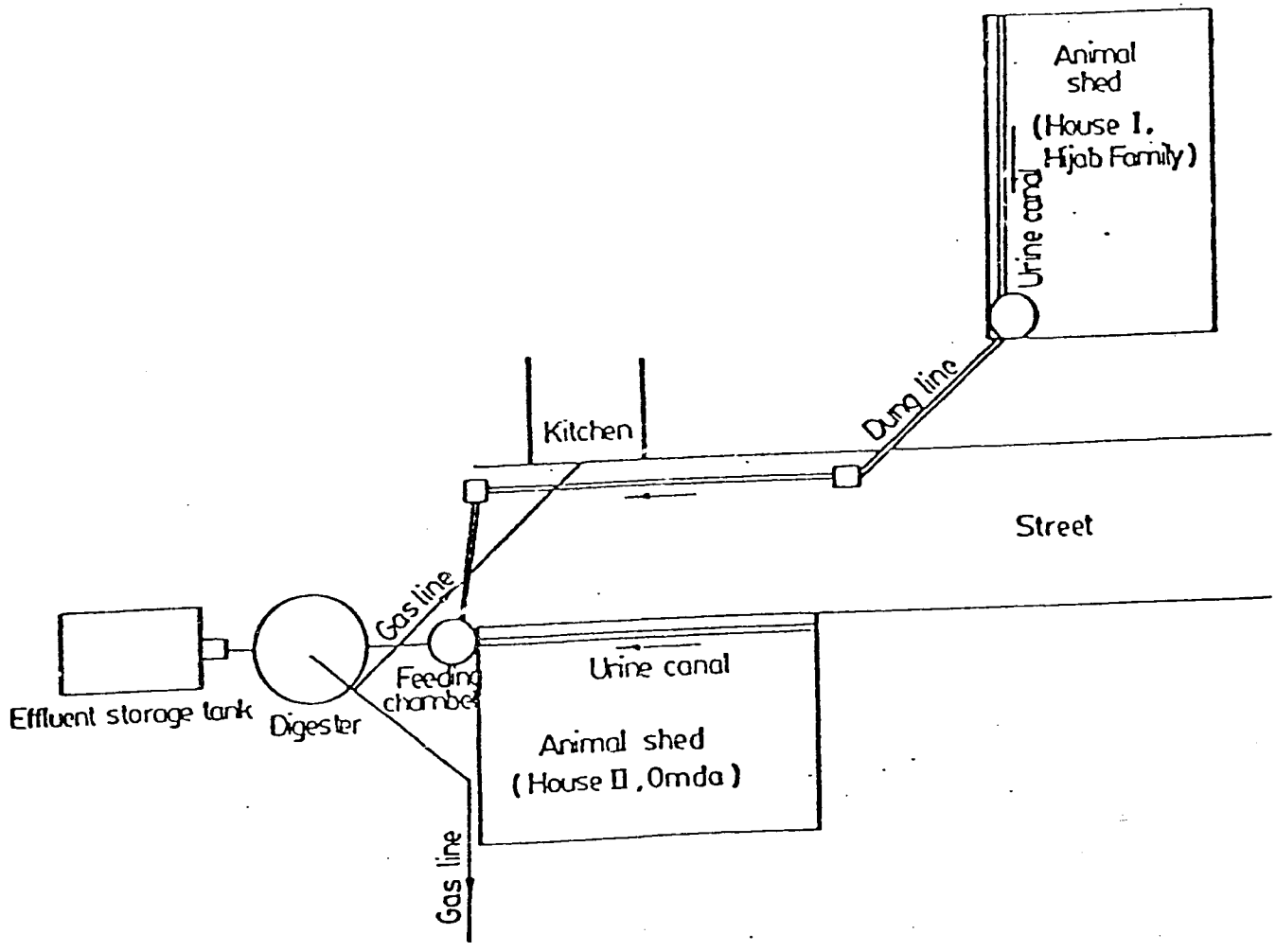

Fig. . Omar Makram Pilot Communal Unit layout with the connection to the two sharing houses .

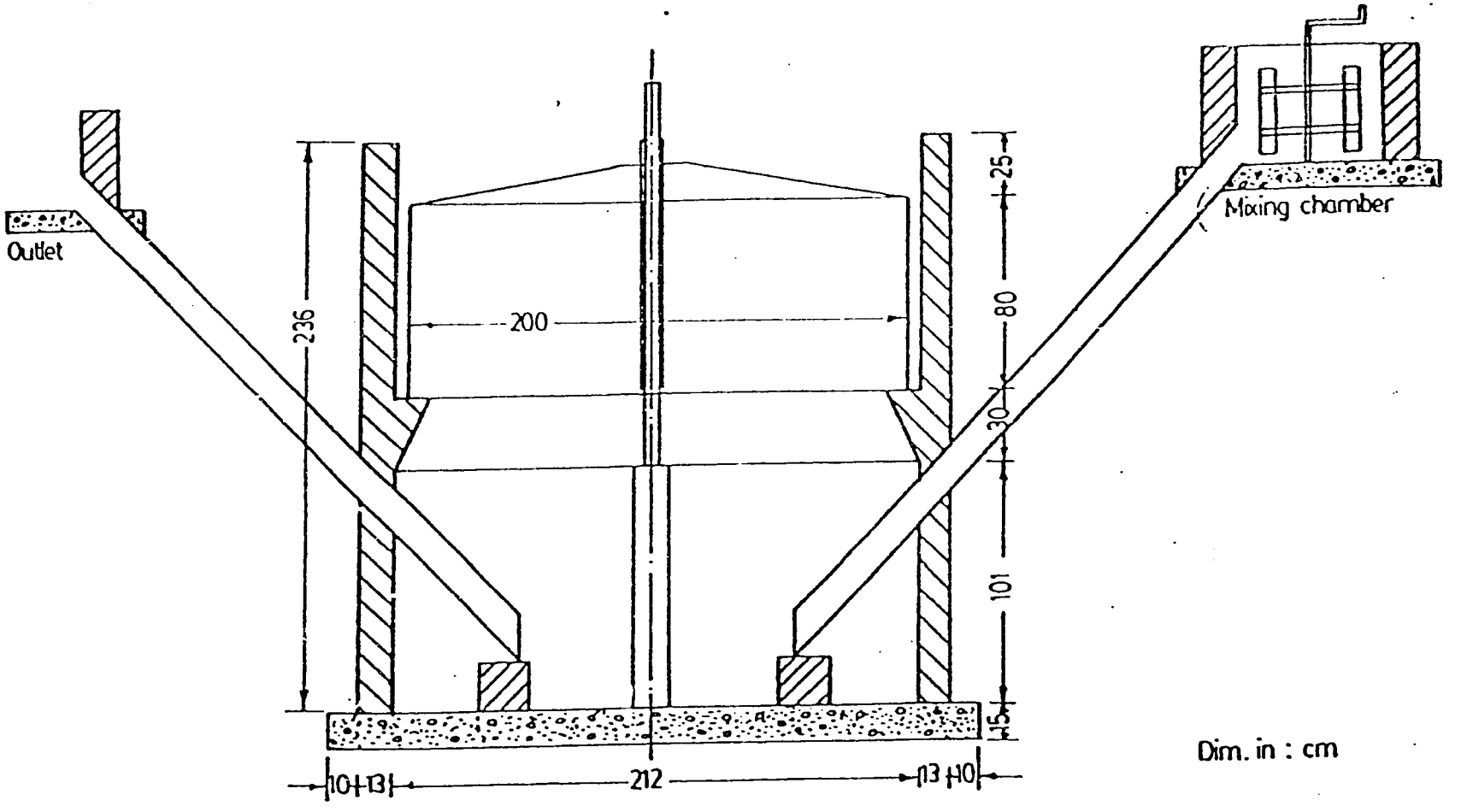

Fig. . Omar Makram Pilot Communal Unit of the modified Indian type .