PN-AAZ-611
55659

ASIAN BIOGAS DEVELOPMENT
A Progressive Report in Two Parts

Dr. Philip R. Goodrich; Editor
Dr. Fatma El-Gohary; Leader
Dr. Adel Mahmoud El-Dayem
Dr. Mohiy-Eldin Abd-El-Samie
Dr. Said Mohamed Badr El-Din
Dr. Hoda Mohamed Megahed
Dr. M.M. El-Halwagi; Part II

1983

Asian Biogas Development:
A Progressive Report in Two Parts

Dr. Philip R. Goodrich; Editor
Dr. Fatma El-Gohary; Leader
Dr. Adel Mahmoud El-Dayem
Dr. Mohiy-Eldin Abd-El-Samie
Dr. Said Mohamed Badr El-Din
Dr. Hoda Mohamed Megahed
Dr. M.M. El-Halwagi; Part II

1983

PREFACE

This report is a compilation of two separate excursions in which Asian biogas development was studied. The first part is a collaborative effort of the November 1979 Egyptian Biogas Study Team, and it is a report of their three-and-a-half-week tour of China, Thailand, and India. The fact-finding mission was under the auspices of the Applied Science and Technology Program of the Egyptian Academy of Scientific Research and Technology and the U.S. National Academy of Sciences/National Research Council--a program sponsored by the U.S. Agency for International Development. Part II is the July 1981 diary report of Dr. Mohamed Mokhtar El-Halwagi, which discusses his observations of biogas technology in India, the Philippines and China.

Members of the 1979 biogas study team were Dr. Fatma El-Gohary (leader), Dr. Adel Mahmoud El-Dayem, Dr. Mohiy-Eldin Abd-El-Samie, and Dr. Said Mohamed Badr El-Din, all from the Natonal Research Centre, Dokki, Cairo, Egypt; Dr. Hoda Mohamed Megahed of the National Center for Social and Criminological Research, Awkat City, Cairo, Egypt; and Dr. Philip R. Goodrich (report editor) from the Department of Agricultural Engineering, University of Minnesota, St. Paul, Minnesota, USA, 55108. Dr. M.M. El-Halwagi is head of the Pilot Plant Laboratory, National Research Centre, Dokki, Cairo, Egypt, and leader of the Egyptian biogas project.

ACKNOWLEDGMENTS

The members of the study team would like to express great appreciation for the well-planned program arranged by:

- The Chinese Academy of Sciences
- The Indian Ministry of Agriculture
- The Economic and Social Commission for Asia and the Pacific (ESCAP) in Thailand

The members are very grateful for the warm reception and hospitality universally shown by the representatives in the three countries. All preparations had been meticulously arranged, and the schedules prepared were comprehensive and appropriate. These preparations enabled the team to learn and benefit from the briefings and discussions that took place throughout the mission.

The names of all the people who made our visits as fruitful and pleasant as possible would be far too long to list, but it is appropriate to refer to the following organizations and to thank those who helped us at those institutions. These include:

China:	The Institute of Biology at Chengdu, Sichuan The Institute of Energy at Canton Communes, brigades and production teams visited
India:	Indian Agriculture Research Institute, New Delhi Planning, Research and Action Division, Lucknow Gobar Gas Research Institute, Ajitmal Gujarat Agro-Industries Corporation, Ahmadabad Khadi Village and Industries Commission, Bombay
Thailand:	Natural Resources Division, ESCAP, Bangkok National Energy Administration, Bangkok Kasetsart University, Agricultural Engineering Department Mahidol University, Faculty of Public Health

CONTENTS

PART I: REPORT OF THE EGYPTIAN BIOGAS STUDY TEAM

Introduction 1

The People's Republic of China 3
- Background 3
- Some Sociological Aspects of Chinese Society 3
- Agricultural Organization 4
- Visits to Research Stations, Institutes, Communes, and Digester Sites in China 6
- Technical Information on Chinese Digesters 15
- Use of Digester Manure 31
- Implementation of Biogas Programs in China 33
- Placement of Biogas in the Rural Economy of China 34
- Organization for Development of Biogas Technology 35
- Summary 37

Thailand 38
- Background 38
- Administration 38
- Agricultural Organization 38
- An Overview 38
- Visits to Digesters in Thailand 43
- Summary 46

India 47
- Background 47
- Administrative Factors 47
- Agricultural Organization 47
- Development of Biogas Technology in India 48
- Visits to Research Stations, Institutions, and Digester Sites in India 51
- Design of the Indian Digesters 53
- Utilization of the Biogas Plants' Products 60
- Research and Development 62
- Socioeconomics of Biogas Plants 63
- Summary 64

References 65

PART II: DIARY REPORT OF DR. M. M. EL-HALWAGI 69

LIST OF TABLES

1	Crop production in Shajiao commune	15
2	Rural digester dimensions	18
3	Materials for 1 cubic meter of #50 cement	21
4	Materials in clinker-free cement	22
5	Materials for 1 cubic meter of #25 cement	22
6	Cost of building materials	22
7	Building materials needed for various 10-m^3 digesters	25
8	Approximate range of nutrients in digester material	31
9	Effect of digester sludge on crop yield	32
10	Fertilty comparison between digester effluent and open-air pool manure	33
11	Estimated cost of gas plants of various size	56
12	Gas consumption of various devices	62

LIST OF FIGURES

1	Flat-roof, rectangular water pressure digester	8
2	New digester under construction	9
3	Water seal valve at outlet of gas storage bag	14
4	Rectangular digester with flat roof and water pressure tank	17
5	Circular shallow digester with water pressure dome	19
6	A pigsty feeding a digester near the house	20
7	Partially constructed masonry digester	24
8	Biogas burners	30
9	Three-in-one digester unit	36
10	Division of Agricultural Economics digester	40
11	Department of Animal Husbandry digester	41
12	Department of Health digester	42
13	Water jar digesters and a gas holder	44
14	Cattle dung cakes drying in the sun	49
15	Biogas plant at slaughterhouse	54
16	KVIC type digester	55
17	Janata type digester	57
18	Mini-Gobar gas plant	59

PART I
REPORT OF THE EGYPTIAN BIOGAS STUDY TEAM

INTRODUCTION

This report has been prepared by a six-member multidisciplinary team that participated in a four-week study tour of the People's Republic of China, Thailand, and India. The main purpose of the study tour was to learn the trends and status of the village-scale biogas technology in these selected countries. The tour was part of a five-year national demonstration project supported by the United States Agency for International Development (USAID) in Egypt through the Applied Science and Technology Research Program of the Egyptian Academy of Scientific Research and Technology (ASRT). The U.S. National Academy of Sciences/National Research Council (NAS/NRC) participated in the program. The project title is "Development and Application of Biogas Technology in Rural Areas of Egypt."

The biogas project has the overall objective of demonstrating that the application of village-scale biogas technology is technically, socially and economically feasible in rural areas of Egypt. A second objective is to provide a plan for applying the results of the comprehensive technology transfer, research, and development and demonstration program to the rural areas. Finally, the project is to provide a concrete, practical recommendation on how to foster the implementation of this technology on a national level.

The key elements of the fact-finding phase of the project were the biogas study tours to some developing countries that had previous successful experiments and sizable biogas programs. The general objectives of the tours were to make a first-hand, comprehensive survey of the current state of the art of biogas technology in these countries and to become acquainted with the impact of the various technical, social, and economic facts related to the countries' biogas programs. The specific objectives were to learn about:

1. Implementation programs followed in these countries, together with the organization and function of the training and extension services in the area of biogas
2. Techniques used for construction, operation, and management of biogas plants in rural areas
3. Research and development programs carried out in research institutions relevant to biogas technology and its implementation
4. Potential applicability of the observed technology to the Egyptian rural areas.

During this period the team observed and analyzed the successful and unsuccessful experiments that have been carried out under many conditions.

Our interdisciplinary group diligently questioned our host scientists, technicians, engineers, and sociologists about the many details of biogas technology. We applied our diverse training and unique interests toward a common goal of learning as much as possible about biogas technology. We also learned about current research that had not yet been published. The up-to-date information allowed our research to proceed without duplicating other work. We gained access to reports that were not available outside the host country.

Most important was the understanding that comes through dialogue among researchers pursuing common goals. Important details were probed and discussed in depth on the spot. Often these were clarified by observing biogas digesters at work. Various items were evaluated from different viewpoints and experiences. Successes and failures were discussed at length and these imparted a much deeper level of understanding than would have been possible through written papers.

THE PEOPLE'S REPUBLIC OF CHINA

Background

The People's Republic of China has a total area of 9.6 million square kilometers. The distance from east to west measures over 5,000 km and from north to south over 5,500 km. China's present population is about one billion, of which 680 million live in rural areas.

China has three municipalities (Peking, Shanghai and Tientsin) under direct authority of the central government. There are also 22 provinces and five autonomous regions.

China uses recycled organic wastes in its agriculture on a large scale. Since liberation, the country has aimed at transforming waste into wealth. Through biogas technology these wastes can provide fuel for domestic use in addition to energy for irrigation and other agricultural operations. Organic manures also provide fuel for farms, light, and electricity in villages. In this respect, China has made remarkable progress in biogas technology.

Some Sociological Aspects of Chinese Society

The Chinese experience is unique in a social, economic, and political sense. It is the fruit of a specific ideology built on ten major relationships.

1. The relationship between heavy industry and light industry on one hand and agriculture on the other
2. The relationship between industry in the coastal regions and industry in the interior
3. The relationship between economic construction and defense construction
4. The relationship between the state, the units of production, and the producers
5. The relationship between the central authorities and the local authorities
6. The relationship between the Han nationality and the minority nationalities
7. The relationship between party and non-party
8. The relationship between revolution and counter-revolution
9. The relationship between right and wrong
10. The relationship between China and other countries

So, taking the biogas technology and its application from the sociological consideration in China, one should be very cautious, as the success of the experience is not only a matter of awareness of people or their acceptance of the technology, but also of the general system in a society that emphasizes production as an ultimate goal.

Agricultural Organization

China's economic growth entailed development of agriculture in the absence of the necessary amounts of foreign aid. Industrialization required increasing expenditures of both labor and products in order to staff, equip, and sustain new ventures. Without significant increases in the amount of cultivated land, this combination of contributions depended on increases in both the yield of the land and the production of agricultural labor. Such changes necessitated improvements in technology and the substitution of capital and skills for unskilled labor. For rapid economic development, these new inputs had to be accumulated, as much as possible, domestically and intrasectorally. To induce appropriate efforts toward these ends, the Chinese Communists transformed China's agriculture system.

After the principal reforms in the 1950s and modifications in the early 1960s, Chinese agriculture appears organized as follows:

Farm Household

The typical farm household surrendered most of its lands and farm assets in exchange for an abstract and a non-negotiable share in the collective property.

Now, as in the past, each household receives a small plot of land for its private use. Normally, this plot is used to grow vegetables--perhaps some grain for chickens or a pig and occasionally to produce some sideline products. The household is free to consume all the products of its private plot, but it is restricted in its marketing of this produce. As a rule, it has to sell commodities which are subject to "planned marketing" and rationing (particularly grain) to the local agencies of the state trade organization. In contrast, it can sell most other commodities, which are subject to "unified marketing" (most supplementary foods) in the local periodic market as well as to these agencies.

The typical farm household derives a substantial share of its total income from the cultivation of its private plot and other sideline activities. However, it obtains most of its earnings by supplying labor services to the agricultural production team to which it belongs. All able-bodied household males (ages 15 to 60) and females (ages 15 to 55) are obliged to participate in collective production. To induce such participation, each is remunerated according to a certain labor criterion: "[the] labor power multiplier

of each member is determined by external qualities such as age and sex." Reward is dependent on this multiplier, the number of days worked, and the quality of his or her work.

Farm households receive part of their income in cash and part in grain. They are free to convert this grain into cash, subject to previously explained restrictions in marketing of private products. Farm households are free to spend their incomes (with a few restrictions) in state stores or at local fairs. They are encouraged to participate in a collective insurance system and, above all, are called upon to deposit their unspent income in the credit cooperatives.

Agriculture Production Team

The typical agricultural production team incorporates the individual households of a small community into a larger production unit. This unit functions as the "basic unit of accounting" and as a means of collective decision making. As a unit it is a private and autonomous organization. In fact it finds itself in a position similar to that of a state-operated enterprise. The unit's decision making authority is limited in several respects:

1. The land that the team cultivates is owned by a larger and organizationally superior collective entity called the "rural people's commune," which grants use of the land to the unit, provided the unit conforms to the commune's decisions concerning land-use plans.
2. Other physical and financial assets that facilitate team operations also are owned by the commune and made available for approved projects to teams in good standing. For example, trucks, tools, and small tractors are available from the commune.
3. Agricultural taxes must be paid in kind through the commune to the state. The state, through the commune, determines the form as well as the quantity and quality of the payment.
4. In addition, certain amounts of specified staples must be sold to the state trade organizations under the system of planned marketing.
5. Short-term credit from a communal organization may be obtained through contracting in advance for the sale of particular quantities of other products under the system of unified marketing.
6. Long-term credit is available also from state financial institutions which, like the communal ones, provide funds for approved projects to units in good standing.
7. Model regulations instruct the unit to match, in its managerial practice, norms that are formulated centrally to fit the normal case and modified locally to meet abnormal circumstances.

Agriculture Production Brigade

A brigade usually constitutes from ten to fifteen production teams. Such brigades performed important managerial functions during the late 1950s when they were expected to offer economies of scale, notably in water management. Since then, however, most of their authority over production management has reverted to the production team, and their current preoccupation seems to be with the administration of collective services. Primary education and outpatient medical care through "barefoot doctors" tend to be organized and financed at this level.

Like its constituent units, the agricultural production brigade is governed somewhat democratically. The members of its congress are elected each year by the unit congresses. It in turn elects a management committee and a brigade director as well as a supervisory committee. Before the "Great Proletarian Cultural Revolution," and apparently since its end, all the members of the supervisory committee must belong to the Communist Party.

Rural People's Commune

As a rule, ten to twelve agricultural production brigades constitute the core of a rural people's commune. In its current form, this largest collective entity is not an arbitrary agglomerate but tends to coincide territorially with the standard marketing area and community of old. Accordingly, communal organizations are apparently located in the traditional central place--a small market town or a large village.

Initially, most communes were substantially larger than at present, primarily for technical reasons. However, at present, large communes are a minority, especially near cities where the traditional spatial system has been changed.

In terms of authority relations, the commune is the highest-ranking collective unit but the lowest-ranking state administrative unit. Accordingly, the commune management committee, which is elected by the commune congress, is composed of representatives of both organizations. Cadres (functionaries salaried by the state) perform the state administrative functions at the commune level. The supervisory committee, which is also elected by the congress, consists entirely of members of the Communist Party.

Visits to Research Stations, Institutes, Communes, and Digester Sites in China

Production Brigade of Suchuarg (Chuang Song Commune), Near Peking

The Suchuarg brigade consists of about 120 families with a total population of 580. Their cultivated area is 950 mu (63.3 hectare), on which wheat and maize are grown.

Since the biogas program began in April 1978, 194 biogas plants have been built, and 95 percent are in operating condition. The size of these digesters ranges from 10 to 12 m^3.

The digesters are fed a mixture of 10 percent night soil, 20 percent pig manure and urine, 20 percent straw, and 50 percent water. Two weeks of precomposting using these materials is performed prior to the original feeding. Slurry is withdrawn every week and used directly in the field. Sludge is removed every six months. One-third of the sludge is left in the digester to act as a seeding material.

The approximately 900 tons per year of slurry produced from the biogas plants saves about 15.5 tons of chemical fertilizer (mainly ammonia solution). This means that 1,000 kg of slurry and only 25 kg of ammonia solution are used per mu (.06 hectare).

About 1.5 m^3 of biogas is produced per day, which is sufficient to supply a family with enough fuel for cooking and lighting.

The introduction of biogas into the brigade has increased the available food for animals. The number of pigs has increased from 700 to 940, and the number of cattle for dairy production from 4 to 7. More fertilizer has been available for the crops and less energy has been purchased from outside the brigade.

Some training courses have been organized within the brigade to train people in digester construction and operation. Three persons are responsible for digester construction and maintenance. Construction requires 30 eight-hour working days for a 10 m^3 digester at a cost of about 70 Yuan ($46.7 U.S.).

State Dairy Farm and Orchard of DeYeng, near Mein Yang County, Sichuan

The 750 mu (50.7 hectare) farm consisting of 300 families and 200 cattle produces dairy products and fruit.

The biogas program, which was implemented in 1974, has seen eight community-sized digesters constructed with a total capacity of 1,560 m^3. Some digesters are of the flat-roof, rectangular water pressure type (see Figure 1), and one new one is a domed type (see Figure 2). Three of these digesters are very large, holding 300 m^3 of waste each. The others vary in size, the smallest being 75 m^3. The three larger digesters are fed with the dung and urine of 60 cattle. They are fed alternately every three days with three tons of waste. Remaining waste is fed into the other five digesters.

Biogas produced from the digesters (700 m^3 per day) is sufficient to run three diesel engines of 88, 20, and 10 horsepower. These engines are coupled to three electric generators of 50, 12, and 6 kW, respectively. This electricity is used for sprinkler irrigation, lighting, and operation of some stationary farm machinery such as feed mills. In three years, a total electrical generation of 47,000 kWh was able to supply about 50 percent of the total energy used by the farm. About 14 tons of diesel fuel and 410 tons of coal were saved.

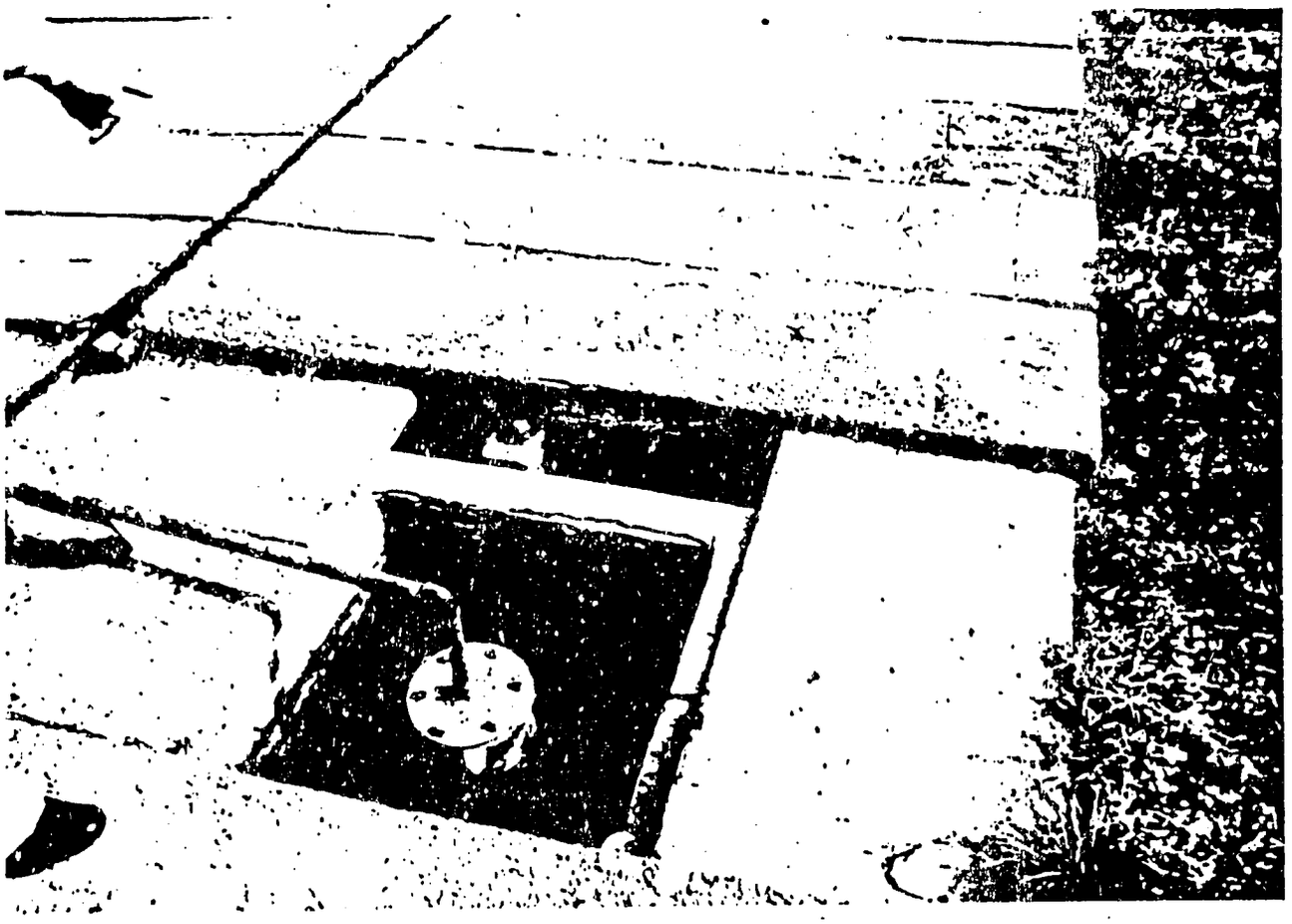

Figure 1 Flat roof, rectangular water pressure digester.

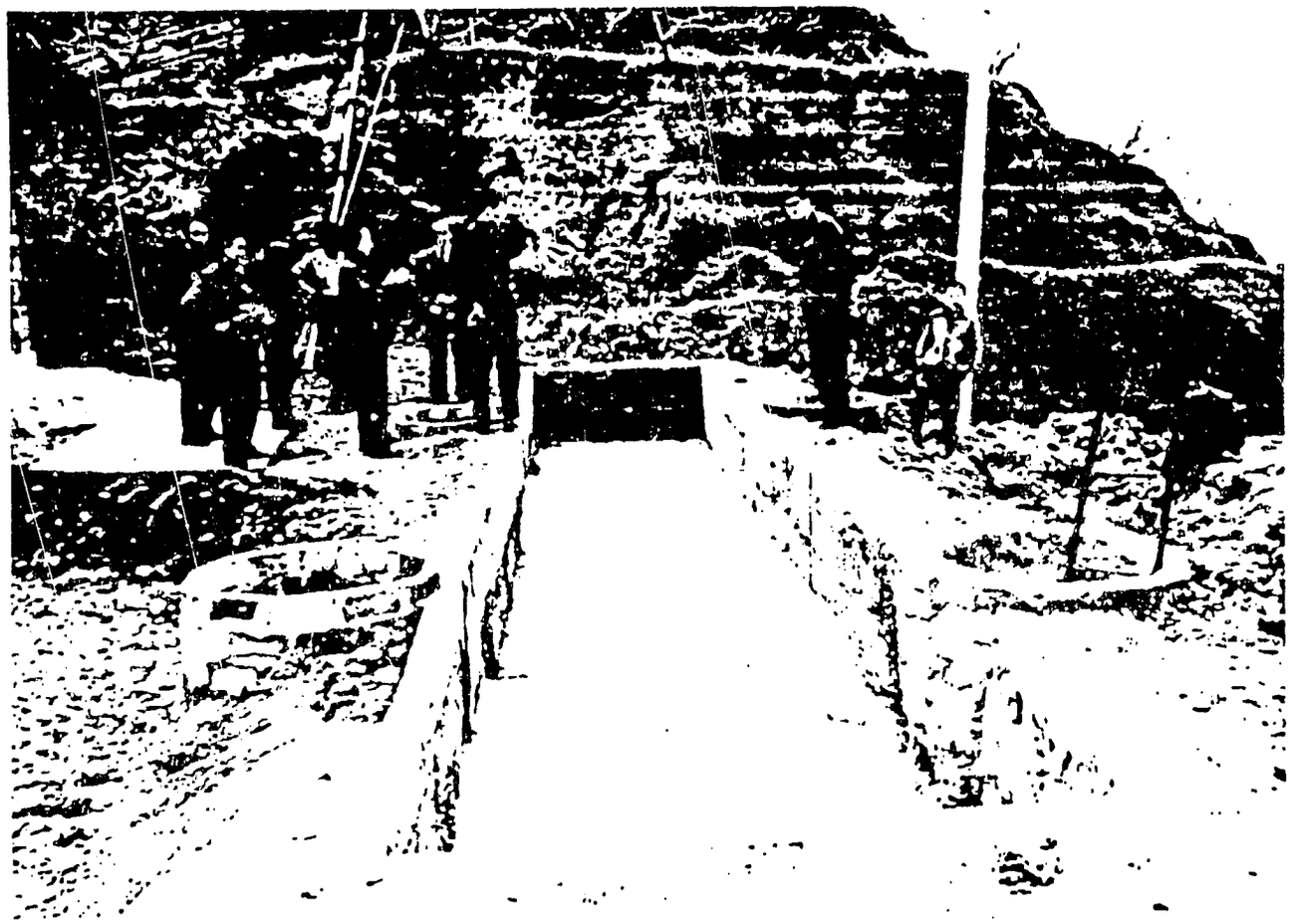

Figure 2 New digester under construction.

Part of the biogas produced is used for domestic needs. A central farm kitchen that runs solely on biogas is able to produce three meals a day for 300 people.

The study team was very impressed with the organization and usefulness of this community-size biogas project.

Biogas Research Station of the Institute of Biology, Chou Choa Commune, 5th Brigade, 2nd Production Team, Sichuan

This station is an experimental pilot station where training and demonstration of biogas use is conducted. Research in biogas production, which is carried out in the laboratories of the institute, is tested and developed at this station.

The station has four large digesters, each of 80 m^3 capacity, fed directly by pig manure. The biogas produced from these units is used to power four diesel engines totaling 12 horsepower. An electric generator of 7.5 kW generates electricity for lighting and for working some milling machinery.

A number of smaller digesters are in operation at the station where different conditions and management techniques are studied. These digesters, along with others under construction, are used in training and demonstration. One very interesting project was a group of two-stage digesters. The effluent from one 5 m^3 digester is fed into a second 3 m^3 digester. This arrangement promotes higher gas production because of the longer detention time.

In test laboratories, chemical and gas analysis is performed. Some research is being done on the fermentation of different agricultural residues.

The observers visited homes of families who worked on the production team and discussed with them the benefits of using biogas technology. This production team has 126 families totaling 444 people. The biogas produced from 106 digesters is used for cooking and lighting about 300 days each year. Before implementation of the biogas program, there was a great shortage of firewood and fertilizer; however, after implementation, many benefits were realized, including:

1. Increases in quality and quantity of fertilizer, which improved soil fertility and increased crop yields.
2. Saving of the agricultural wastes normally used for fires. These wastes were then used for animal feed, which resulted in a capability to increase the number of pigs.
3. With the experience obtained through training, each family could operate and maintain their own digester. This work added extra working points which then increased the income of the team members.

Dr. Megahed met with a sociologist leader in the commune who detailed the social structure of the commune.

The Chau Choa commune, located in Sichuan Province, incorporates 6,500 families for a total population of 27,300 persons. Chau Choa commune is divided into 12 "production brigades" each consisting of a number of production "teams." The total agriculture area of the commune is 23,400 mu (1,560 hectare) with main crops of rice, wheat, and oil seeds. Crop yield has increased substantially. In 1949 yield was 9,780,000 kg; in 1978, yield had increased to over 13,000,000 kg. Ninety percent of the 23,400 mu (1,560 hectare) is cultivated twice; the first cultivation being rice, and the second being wheat. The remaining 10 percent is cultivated three times; 2 cultivations of rice and one of wheat or oil seed.

The total income for the commune in 1978 was 37,400,000 Yuan, or $4,930,000 ($1.00 U.S. = 1.5 Yuan). This income includes work done by teams for the commune itself. The income was divided among the people according to the number of individual work points. There is, however, an additional income for individuals if they work overtime, sell produce from private plots, or raise pigs and poultry to sell. This income totaled 9,100,000 Yuan ($6,070,000).

Part of the total income for the commune is brought in by small industries. There are 109 small industries, each having no more than 300 employees. These industries include the manufacturing of agricultural tools, construction materials including cement and some chemicals. There are shops that repair cars, tractors, and agricultural tools. Other industries specialize in sewing or garment making, rice and wheat treatment and furniture making. There are some exports such as silk thread and carpets. Total gross income from these industries in 1978 was 6,560,000 Yuan ($4,300,000). The net profit was 1,170,000 Yuan ($780,000).

Each person is paid according to his or her work points. In 1978 the average individual income was 176 Yuan ($117) for work points, 70 Yuan ($46.7) in special income (e.g., selling personal produce), and 307 kg of wheat.

Seven percent of the total agricultural area in the commune has been distributed to the people of the commune in the form of private plots. Each person owns about 1/10 mu and is free to cultivate it and owns its produce. After the land reform in 1949, a house was given to each family for personal ownership. The area of the house depended on family size. Some households, therefore, turned out to be very large. At the present, due to the very strict population code, these houses do not vary much in size. The average house size is about 20 m^2.

Each commune supports one hospital which ministers to the major medical needs of the commune. However, one hospital alone cannot serve a large community so there is a small clinic within each brigade to take care of minor medical problems. Depending upon the economic conditions within the commune, medical services are offered free or, when conditions are tight, a small fee (up to half the cost) may be charged.

Institute of Biology, Chengdu, Sichuan

Chengdu Institute of Biology is a branch of the Chinese Academy of Sciences. It supports comprehensive research and development programs in many fields of biological and microbiological sciences, principally in the field of biogas technology.

The visiting study team was given the opportunity to visit some of the departments and laboratories of the institute where current research activities were presented. The laboratories of the institute were well equipped with modern instruments, most of which were fabricated in China. In the pilot plant laboratory of the institute, extensive work was being carried out in biogas technology. A series of pilot-scale digesters were being operated under controlled conditions of mixing and heating.

The study group discussed with the staff of the institute current activities and problems in biogas technology. A seminar on biogas was held at which Prof. Leu presented a paper on the biogas fermentation in China's areas. Prof. Goodrich presented a paper on biogas generation on farms in the United States and Canada, and the Egyptian team briefly presented the work carried out in Egypt on biogas. The seminar concluded with an extensive and detailed discussion.

Rural Economy Division of the Social Academy

The group met with the head of the Rural Economy Division in the Social Academy in China. The Social Academy in Chengdu previously functioned as an institute for sociology and philosophy. Recently its emphasis has turned to work in economics. The 22-person Institute of Economic Research which functions within the academy, is involved in agricultureal economics, international economics, industrial economics, commercial economics, and fundamental theories. The academy also has other departments such as philosophy, arts, local history (micro-history), history (macro-history), and scientific socialism. Research is the main function of the departments. The topics of research are agricultural economics, forestry, cattle, and fisheries. The methods of study include interviews, history, theories and practices, and comparative methods. The cultural revolution had an adverse impact on the social sciences in general, and on sociology in particular. The academy in Chengdu does not include sociology in its program. Only in Peking is sociology one of the academy's departments.

Energy Institute in Guanzhou (Canton), Guandong Province

The Energy Institute is a branch of the Chinese Academy of Sciences. The institute has three departments: geothermal, oceanography and biomass energy. Brief outlines of the institute's activities were presented by the director, followed by more detailed presentations by the heads of the three departments.

Within the biomass energy department, research centers on design and construction of biogas plants; how to run and manage biogas plants; and development of gas burners and gas engines. Research work by the department includes: development of an anaerobic filter for industrial waste treatment; promotion of fermentation reaction through the use of digestion stimulators; pyrolysis of biomass; prodution of energy crops (water hyacinth and elephant grass); and development of biogas engines.

Night Soil Treatment Station, Foshan County, Guandong

This station was originally a night soil treatment plant but unfortunately did not collect any biogas generated from the night soil. Night soil is human waste collected in the home and in latrines. This material is used as fertilizer for crops. In 1974 it was transformed into a biogas power station with an output of 90 kW.

The station has four groups of biogas digesters. Each group has seven digesters connected in series, and ends at a sedimentation tank. The night soil (about 60 tons/day) is carried by trucks from the city and unloaded into a central feed tank. Feed is introduced into each group of digesters by gravity and flows from one digester into the next in the same group and finally into the sedimentation tank. The supernatant overflows from the sedimentation tank into a canal. Sludge is periodically taken out manually or pumped out and is used as fertilizer (about 60 m^3/day).

The biogas produced (about 420 m^3/day) is collected in two large plastic bags, each of 125 m^3 capacity. These bags are sheltered from the sun by a building. The gas pressure in the 0.28-mm-thick polyvinyl chloride film is maintained at 3 mm water column by safety valves. A simple water valve is also used to control flow in and out of the bags. Figure 3 shows the water seal valve. A bucket of water is moved from a step to a low ground to open the V-tube valve. The water flows from the V-tube to the bucket and allows the gas to flow in or out of the bag. It is a cheap, reliable, and noncorroding valve. This gas is used as a fuel for operating two engines of 112 and 80 horsepower connected to two electric generators of 50 and 40 kW, respectively. The station is able to feed the electric current into the three-phase power grid of the city.

Shajiao Commune, Guandong Province

The Shajiao commune consists of 25 production brigades totaling 318 production teams. The total population is 72,000 persons (19,200 families). The land under cultivation totals 56,495 mu (3,766 hectare).

The basic activities of the commune are the cultivation of sugarcane and mulberry fish production and silkworm breeding. These activities are managed as one integrated unit where the outputs from

Figure 3 Water seal valve at outlet of gas storage bag.

one helps the production of the other; for example, dead silkworms are used for fish production, the stalks of sugarcane are used for pig fodder resulting in greater pig manure, and the manure produces biogas and organic fertilizer. This fertilizer is applied to the mulberry orchards. The leaves of the mulberry trees are used for breeding silkworms, and so on. Moreover, the mud of the fish ponds is highly fertile and is added to the cultivated land.

Most commune members use biogas for lighting and cooking. This results in a greater amount of fertilizer for mulberry and sugarcane cultivation, with a subsequent increase in silkworm breeding and increased fish production. This increase in silkworm and fish production has resulted in an increase in the income of the commune members. The use of biogas has saved fuel costs, is hygienic, and has improved the environment. Table 1 shows how production has changed in Shajiao Commune.

Table 1 Crop Production in Shajiao Commune

	Yield (kg/mu)		
	Before liberation (1949)	After liberation	Highest yield
Sugarcane	225	6,500	21,000
Mulberry	1,250	2,250	4,000
Fish	65	190	400
Cocgon	17	150	200

Biogas plants are of the dome type with capacities of 6-8 m^3. All are of three-in-one combination. A power station operated by biogas produced from four rectangular digesters is used to operate processing machinery.

Technical Information on Chinese Digesters

Design and Construction of Digesters

General Description The unique feature of Chinese digesters is that they have a fixed roof and are completely underground. There are many advantages of underground digesters: they save farmland; have better thermal insulation and avoid cracks caused by a difference of temperature; save building materials (the soil acts as substratum and

sometimes as a framework for construction); easy manipulation because feeding and discharging occurs at ground level; and easy combination of latrine and pigsty. The drawbacks include excessive excavation work and problems arising from high water tables or hard rocks.

The advantages of the fixed-roof digesters include: construction of the gas holder from conventional building materials; no moving parts, and no corrosion, hence less maintenance. The basic difficulty of the fixed-roof digester is that of gas leakage. This has been overcome by a carefully applied plastering technique.

The Chinese are pioneers in the development of appropriate construction design of digesters. Use of local conventional building materials has resulted in large reduction of construction costs. The following digesters have been constructed and operated in the different provinces of China: a circular wide and shallow digester with domed roof and dish-shaped bottom; rectangular digester with flat roof, with and without liquid pressure tank; spherical and hemispherical digesters; horizontal cylindrical and egg-shaped digesters; tunnel-shaped digester with arched roof. Of these types, the circular digester with domed roof is now most common and is considered as standard. More than 85 percent of all digesters constructed in China are of this type. Standard designs for different capacities (6, 8, 10, 12, 50 and 100 m^3) are now available for direct use.

The rectangular digester (Figure 4), which was the earliest design, is much more expensive. Gas leakage from joints and corners is a major problem. Although there are some digesters of this type in good working condition, the trend is now to discard this design.

Digesters of spherical and egg-shaped design are more abundant in the countryside of Shanghai. However, the construction techniques of these digesters are relatively more complicated than that of the circular type. The team did not visit digesters of this design. The tunnel digester is still under development, and experiments have shown good performance in the destruction of parasites.

The circular digester consists of the foundation base, the cylindrical body, the dome, the inlet chamber, the outlet chamber, and the cover. The base of the digester is dish-shaped. This saves materials in construction and safeguards against uplift pressure from underground water. The dome has a rise-to-diameter ratio of 1:5 to give optimum structural strength. It has a manhole fitted at the apex. A gas delivery pipe is fitted to the cover which is then sealed into the dome by a thick plastic clay (submerged in water to ensure airtightness).

A straight inlet feed pipe, which prevents clogging, enters midway up the vertical cylindrical wall. The rush of feed material agitates the digester contents, which destroys any scum and promotes gas production. The inlet chamber is an inverted, inclined, truncated cone extending from the cylindrical feed pipe. The inlet chamber can be connected to either the house latrine and/or the pigpens to allow direct feeding.

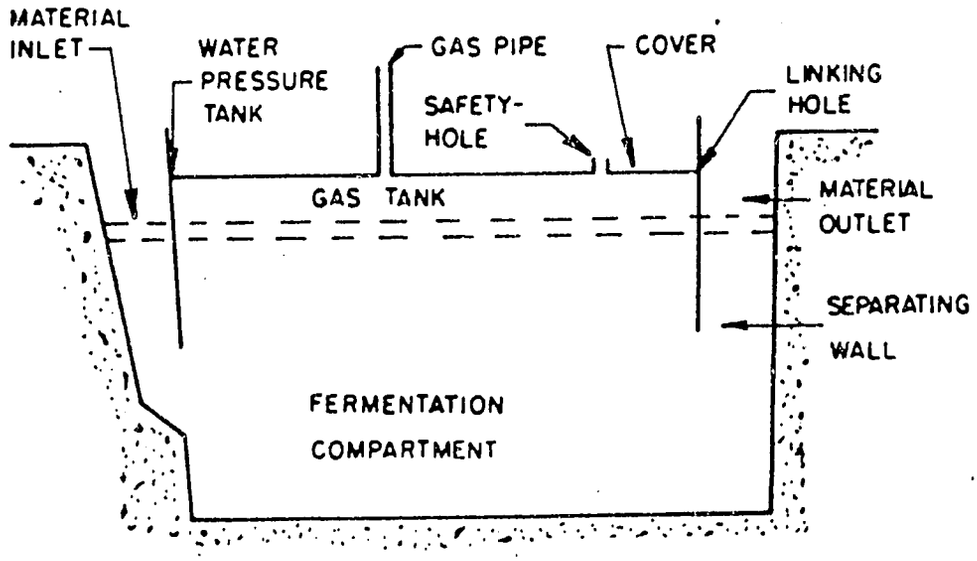

Figure 4. Rectangular digester with flat roof and water pressure tank.

The opening of the outlet pipe is also placed halfway up the cylindrical wall, which permits discharge of clear supernatant slurry that is free from parasite eggs and bacteria. This leaves a heavy sludge with most of the settled parasites at the bottom of the digester. The outlet chamber is quite wide to enable removal of the slurry. It is covered by a wooden or concrete cover to keep the heat in and to prevent a fall injury to man or animal. The volume of the outlet chamber is about 10 percent the volume of the main tank.

Size and Dimensions of Digester The size of the digester is determined by the amount of gas required for daily use. Under the climatic conditions prevailing in China, the average daily gas production is about 0.15 m^3/m^3 digested material. The gas needed for cooking and lighting is 0.2 m^3/person-day. The size of a Chinese household is from 5-7 people; therefore, the sizes of Chinese household digesters are from 8-12 m^3. The 10 m^3 digester is considered a standard family-size digester.

Large digesters are constructed primarily for electric power generation. Digesters as large as 300 m^3 (45 m^3 biogas/day) have been constructed for this purpose, but the general recommendation is to operate small units (50 or 100 m^3) in parallel. Thus, if there is a malfunction in one, the others can keep producing gas. Optimization of surface area per volume has been thoroughly studied. The dimensions chosen for rural digesters of common use in China are shown in Figure 5 and Table 2.

Table 2 Rural Digester Dimensions

Effective Capacity (m^3)	Dimensions (cm)							
	L	B	H	D	R_1	R_2	f_1	f_2
6	458	306	253	240	174	255	48	30
8	488	336	263	270	196	286	54	34
10	518	366	273	300	218	318	60	38
12	538	386	279	320	232	340	64	40

Site Location of Digesters In China most family digesters are constructed with the general arrangement of "three in one," where the unit is connected to the pigsty and the house latrine. In some cases, a "two in one" arrangement is used. The layout permits easy conveyance of feeding materials and easy cleaning of the latrine. Figure 6 shows a typical digester located near the pigsty.

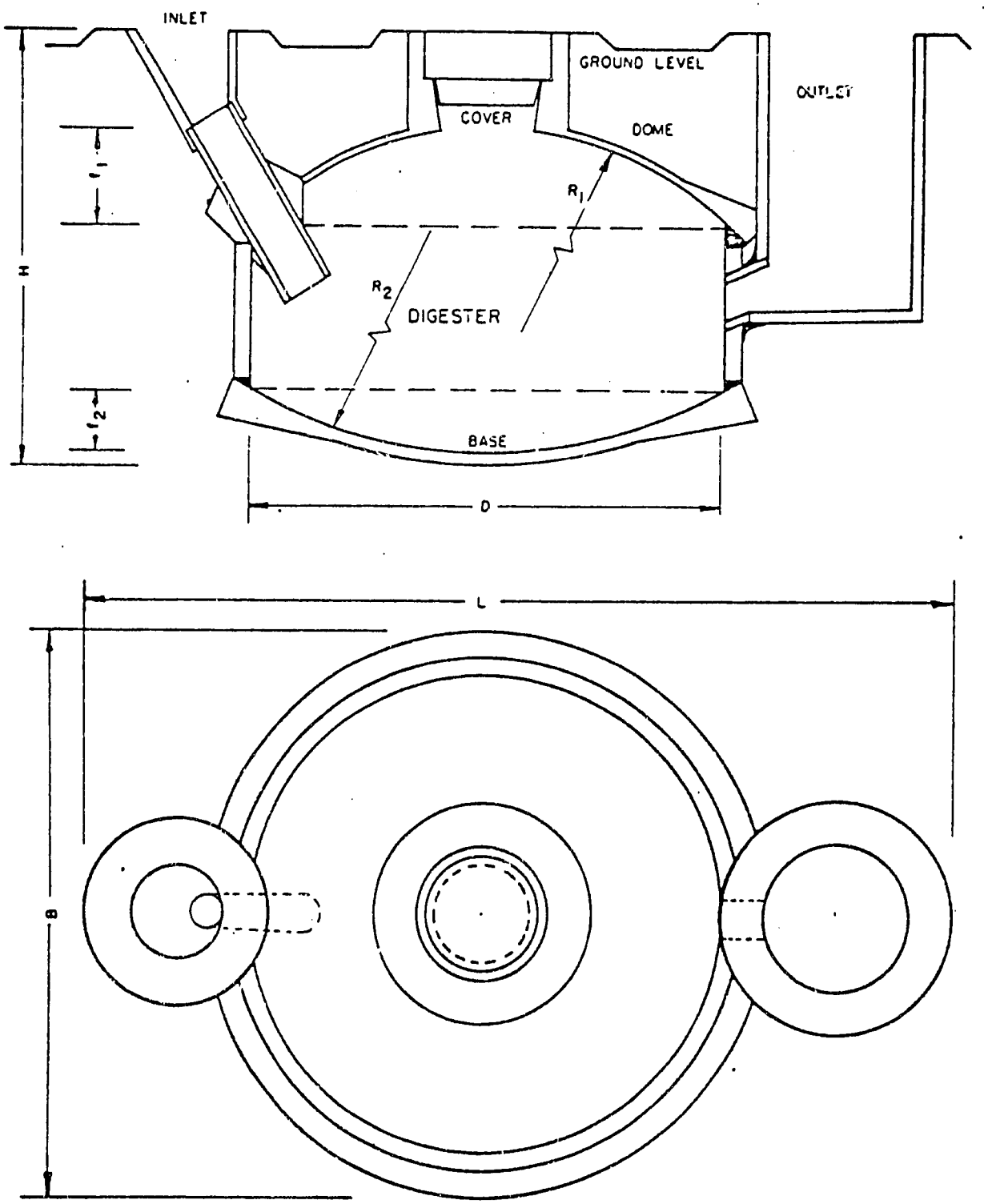

Figure 5 Circular shallow digester with water pressure dome.

Figure 6 A pigsty feeding a digester near the house.

The selection of a suitable site is based on the following considerations: the digester should be built near the house to shorten the distance of gravity feeding return gas; the site should be far from any tree roots, from underground water or any source of drinking water; it must not be located where rainwater accumulates; and it should be exposed to sunlight for as long as possible. Two common locations are outside but near the house in the open where sunlight is available, and indoors underneath the kitchen or the pigpen for protection from low temperatures during the winter.

Community digesters are located for convenience of loading, cleaning and gas utilization. They can be placed near the animal sheds or connected to the latrines of a school or hospital.

Building Materials Several kinds of building materials have been recommended. The most common materials include low-grade concrete, concrete made from clinker-free cement, and lime clay. Low-grade concrete is a low-strength concrete that is made by blending a mixture of slaked lime, clay, coal cinder or lime-kiln slag into the cement, which reduces cement consumption. The amount of materials needed to prepare 1 m^3 of concrete of grade number 50 (#50 = 50 kg/cm^2 compressive strength) is listed in Table 3.

Table 3 Materials for 1 Cubic Meter of #50 Cement.

Water (kg)	#400 cement (kg)	Lime powder (kg)	Clay powder (kg)	Sand (kg)	Gravel (kg)
135	83	39	--	658	1535
135	79	--	43	658	1535

Concrete made from clinker-free cement (CFC) is a mixture of pozzolanic material mixed with an appropriate amount of lime and gypsum or cement. Coal cinder, lime-kiln slag, crushed bricks or tiles can be used as pozzolanic materials. The grade number of this cement may reach 75-100, and concrete made from this cement can attain, in 28 days, a compressive strength of 20-25 kg/cm^2, and may reach 40-45 kg/cm^2 after 60 days.

Tables 4 and 5 show the weight percentage of materials in clinker-free cement and in 1 m^3 of #25 concrete.

Table 4 Materials in Clinker-free Cement

Slaked lime (kg)	Pozzolanic powder (kg)	Gypsum (kg)	#400 Cement (kg)
24	71	5	--
24	68		9

Table 5 Materials for 1 Cubic Meter of #25 Concrete

Water (kg)	CFC (kg)	Fine Sand (kg)	Gravel (kg)
200	300	535	1220

Clay, lime, and water mixed together in the proportion of 9:1:2.5 by weight is called lime-clay. After compaction and curing in a moist state for some days. the lime-clay can reach a compressive strength of 20-25 kg/cm^2. Bricks and stones also may be used for digester construction. Their selection is determined by local availability. In such cases, the binding material is a #10 mortar made of cement, lime, and sand in the proportion of 1:2:14. The unit cost of building materials in China is shown in Table 6.

Table 6 Cost of Building Materials

Item	Description	Unit	Cost in Yuan ($)*
Standard brick	24 x 11.5 x 5.5 cm	1000 Red	30 (20)
		Gray	37 (25)
Cement	#400	Ton (metric)	42.4 (28.2)
Sand	Fine	cubic meters	10.8 (7.2)
Gravel	Fine (0.5 - 2 cm)	cubic meters	25.6 (17.1)
	Ordinary (0.5 - 4 cm)	cubic meters	23.2 (15.5)
Crushed stone	1 - 4 cm	cubic meters	27.7 (18.5)
Coal cinder		cubic meters	2.2 (1.5)
Slag		m	3.5 (2.3)
Quick lime		Ton	21.4 (14.3)

*Unit cost of building materials in China ($1 US = 1.5 Chinese Yuan as of October 1979)

Building Technique The digester is a sealed underground container. Its structure should be rigid and reliable, and it should be waterproof and airtight. The latest design of the Chinese digester (the cylindrical wide and shallow digester) is so constructed that the whole digester is under external compression. This leads to great savings in building materials (compressive strength is much greater than tensile strength). Moreover, it can be erected in places where the underground water level is high.

Two major construction techniques are followed in China. The first, known as cast-in-place or integral construction, uses a minimum primary excavation of soil, with the soil itself being used as a framework for the digester body. The soil is then removed from inside the finished structure.

The second method, known as excavation work or masonry technique, is based on primary excavation of the pit followed by construction of the dome of the wall with masonry materials (Figure 7). The base is cast concrete, and the dome may be either masonry or cast concrete. Fired clay brick, stone, or precast concrete blocks are used as masonry materials. The Chinese have developed a simple technique for constructing the brick dome without the use of supports.

The technique applied depends on the type of building materials available and the type of soil.

Plastering of Inner Surface Perfect and efficient internal plastering of the digester is a very important part of construction. The gas and water leaks depend mainly on how perfectly the plastering has been done. Multilayer plastering, with different materials of each layer, is important to break the capillary passage. The type of plastering materials depends on the method and materials used. Different materials are used for plastering. The following are examples:

For brick or cast-in-place digester:

1st coat: Brushing of 0.5 mm thickness with cement paste and waterproof powder (sodium silicate)--ratio 1:0.2.

2nd coat: Plastering of 7 mm thickness of composite plaster--1:2:3 lime paste:coal ash:sand.

3rd coat: Plastering of 4 mm thickness of composite plaster--1:1:2:3:3 cement:lime paste:coal ash:sand:clay.

4th coat: Brushing of 0.5 mm thickness of plaster--1:1 cement:lime paste (only for gas storage areas).

5th coat: Same as first coat.

6th coat: Consisting of 1:0.2 cement:bittern, or 1:0.3 paraffin wax:kerosene is added as a film for the gas storage area.

Total thickness is 12.5 mm.

Precast concrete block digester:

1st coat: Brushing of 0.5 mm thickness--1:0.2 cement:lime paste.

2nd coat: Plastering of 5 mm thickness of composite plaster--1:0.2:3 cement:lime paste:sand.

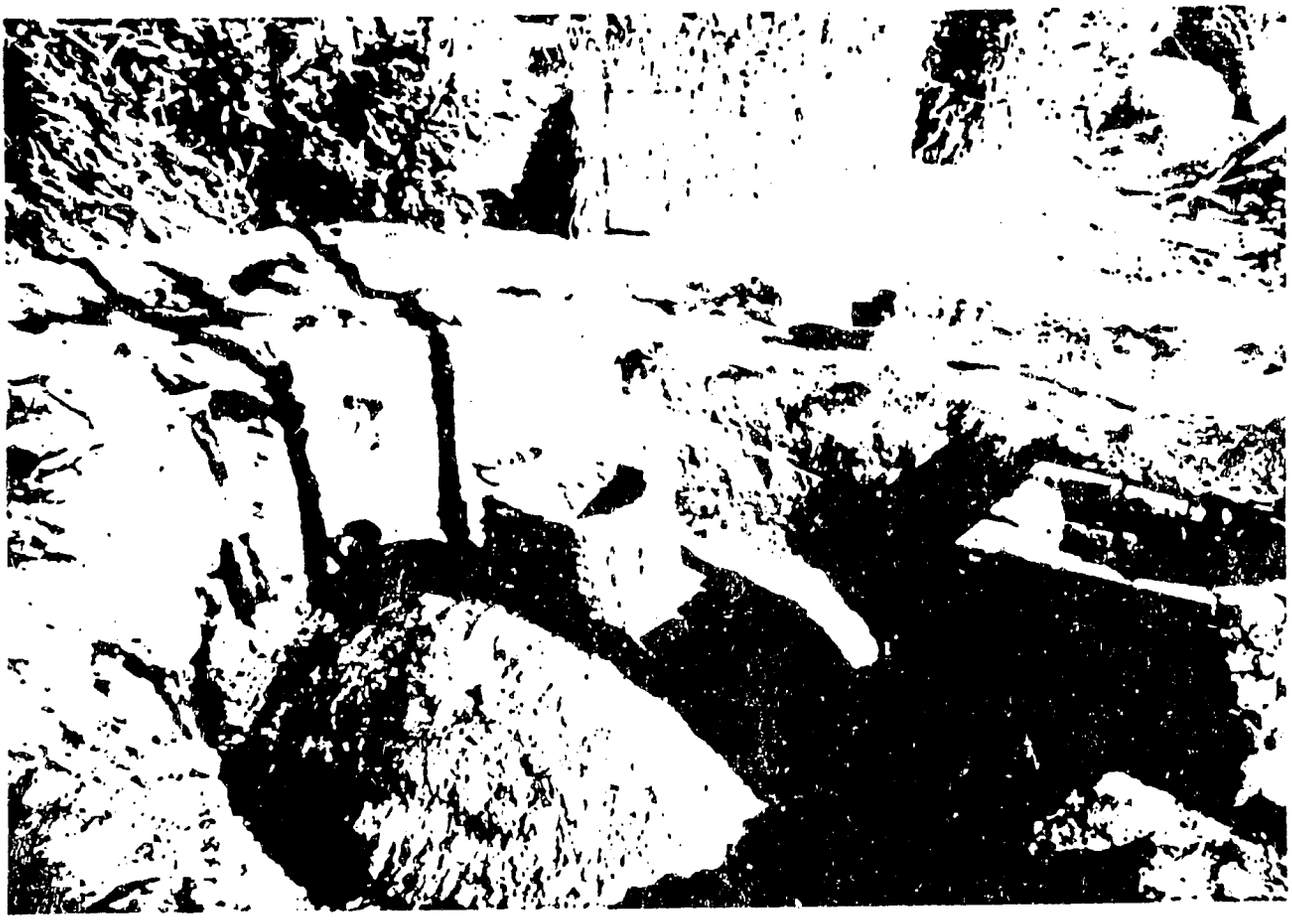

Figure 7 Partially constructed masonry digester.

3rd coat: Same as first coat.
4th coat: Plastering of 5 mm thickness of composite plaster--1:0.4:3 cement:lime paste:sand.
5th coat: Brushing thin films of pure cement paste applied 2-3 times to give a thickness of 1 mm.
Total thickness is 12 mm.

In all the plastering layers, ferric chloride ($FeCl_3$) is added to the mix in an amount of 1-2 percent of the weight of the cement. A special technique is followed when coating the surface with the plastering materials.

The amount of building materials used to build a 10 m^3 Chinese digester is shown in Table 7.

Table 7 Building Materials Needed for Various 10-m^3 Digesters

	Type of Construction		
	Brick	Cast-in-place	Precast Concrete Blocks
#400 cement (kg)	250	492	520
Lime paste (kg)	110	110	110
Coal cinder (kg)	170	170	170
Fine sand (kg)	400	400	400
Clay paste (kg)	100	100	100
Sodium silicate (kg)	1.2	1.2	1.2
Crushed stone or gravel (m^3)	0.27	1.78	1.78
Medium sand (m^3)	0.75	1.00	1.06
Bricks	920		
Quick lime (kg)	40		

Training of Technicians

Training of technicians in the technical construction work, in maintenance, and in extension work regarding biogas is an important part of the program. Such training is done at specially convened training programs at county and provincial levels. Leaders of production teams are also asked to participate. Lack of adequate training in the initial stages of the program was a major reason for defective construction of a large number of early biogas units.

When a region is selected for biogas implementation, the local government (biogas promotion office) will establish a technical training program for commune members. They learn all aspects of biogas technology and how to construct and manage biogas plants. They then build a model digester which gives them a realistic demonstration. After the training course, these technicians return to their own teams and instruct others. They are responsible for the construction, supervision, and assistance needed by individual families to build and manage their own digesters. In the last 5 years, 300,000 biogas technicians have been trained at various levels in Sichuan. There are now two or three technicians for every production team of about 200-300 people. Films and television programs highlight outstanding initiative and innovation from all over the country.

General Management Technique of Biogas Plants in China

Feed Materials and Digester Loading The raw materials used for feeding biogas digesters are human, animal, agricultural, and house wastes. In using various types of materials, the carbon-to-nitrogen ratio of the feed mixture is kept at 20-25:1, and its dry matter concentration is 7-10 percent. Low concentrations are used in the summer, and higher concentrations are used in the winter. The biogas technicians are provided with tables showing the carbon-to-nitrogen ratio of various feed materials and also the volume/weight ratios in order to enable them to advise members of the production team on the ratios they should adapt. The proper charging of the raw materials and withdrawal of the digested slurry are the key points that keep a continuous production of biogas.

The operator of the digester follows the ensuing technique:

1. Initial loading and subsequent loadings every six months.
2. Daily or periodic feeding with frequent discharge of slurry.

For the initial loading of the digester, pretreated organic material consisting of pig manure, composted stalks, and some night soil is used. The ratio of these materials is 3:1, respectively. The usual method of pretreatment is to mulch the straw, then alternately layer it with a solution of 2 percent lime water and effluent slurry from the digester. After the successive layers are made, the whole pile is covered with clay. The material is left for 7 to 10 days in the summer or for 20 to 25 days in the winter. By this pretreatment step, the wax on the stalks dissolves, the cellulose becomes soft and loose, and the rate of digestion is greatly increased. Some parasites will also be killed due to the rise in temperature.

The materials are loaded into the digester until they fill about half its volume. Digester sludge then is added, and the mass is diluted with the required amount of water. Sludge from other digesters is added as 1 percent of the total charge. The digester is loaded in

this fashion twice a year. Direct addition of night soil from latrines and manure from pigpens is then carried out daily.

By using this method of initial loading, the digester begins to produce biogas after the sixth day with a methane content of about 37 percent, and after 33 days the methane content increases to 72 percent. Other combinations of feed materials may include:

1. Urine:human excreta:water--2:3:5
2. Human excreta:pig manure and urine:water--2:3:5
3. Human and animal waste:marsh grass:water--2:3:5

Stirring of the Digester Slurry It is necessary to stir the digester slurry every day to prevent the thickening and caking of scum on the surface which prevents gas from rising into the gas chamber. For small household digesters, stirring is not necessary because the daily flow of feed materials is sufficient to cause some degree of mixing. Large digesters are normally stirred every few days using wooden sticks. In some cases, a hand pump that circulates the diluted slurry through the digester can be used. Some very large digesters are fitted with mechanical mixers where stirring is done every two days for about two minutes. The purpose of mixing is to distribute the raw materials evenly. This extends the contact of raw material with bacteria, which then speeds up the fermentation process and thereby increases the gas yield. Experiments have proved that stirring can increase the gas yield in a digester about 10 to 15 percent.

Emptying the Digester Due to the daily addition of wastes from latrines and animal pens, an equivalent amount of decomposed slurry is displaced into the outlet chamber. This effluent is removed manually every four to five days for agricultural use. In some plants, effluent is withdrawn by pumping it into tankers where it is sprayed directly onto the field.

The heavy sludge or residue remaining in the digester is emptied twice a year (usually in spring and autumn) before each periodic feeding with fresh raw materials. Usually about 25 to 30 percent of this sludge is left inside the digester to act as seeding material for the new batch.

Control of Temperature In the summer, the average temperature ranges from 22°C to 26°C, and the daily gas yield is 0.3 m^3/m^3 digester volume. In the winter, when the temperature ranges from 13°C to 15°C, the gas production drops to about 0.1 m^3/m^3 digester volume or even less. By proper management of the digester through control of the solids-to-liquid ratio, choice of suitable site, and use of plastic covering in the winter, it is possible to keep an average constant daily gas production rate of 0.15 to 0.2 m^3/m^3 digester volume. Some research and development work is being performed on the effects of

heating the digester with exhaust gases or cooling water from internal combustion engines operated by biogas.

Control of pH The optimum pH for biodigestion is 7 to 8. If there is an improper mixture of raw materials, improper management, or the disruption of normal activity, a marked decrease in pH will be observed. One of the following corrective measures can be applied: (1) removal of part of the sludge and addition of a certain amount of dilute raw material; (2) addition of an amount of manure mixed with burnt ash; or (3) slow and controlled addition of lime water with proper mixing of the contents of the digester.

Inhibition and Acceleration of Digestion There are many factors that inhibit the activity of microorganisms: an increase of volatile acid concentration over 200 ppm; an increase of ammonia nitrogen over 1,500 ppm; any kind of agricultural disinfectants; and many salts, especially those of heavy metals.

On the other hand, there are some materials that can increase the gas production. Experiments have shown that the addition of salts of rare earth metals (5 ppm) or manganese (5-10 ppm) or molybdenum (10^{-4} to 10^{-3} ppm) increases biogas production remarkably.

Under normal conditions, a well-managed digester has a constant gas production rate, with 60-77% CH_4 and 15-30% CO_2 together, and small quantities of H_2S, N_2, and H_2. Improper operation can result in a continuous decrease of gas production; a decrease in methane concentration and an increase in the CO_2 concentration in the biogas produced. A defective digester produces biogas of less than 50% CH_4 and/or more than 35% CO_2.

Experiments show that a decrease in gas production was mainly due to the accumulation of volatile acids that result from improper feeding. The increase of volatile acids is caused by

- o Lack of seeding or methane bacteria
- o Too high a concentration of feed materials
- o High carbon-to-nitrogen ratio
- o No fresh feeding or sludge withdrawal for a long time.

The solutions to these problems are:

- o Addition of some activated sludge
- o Adjustment of the proportion of raw materials
- o Withdrawal of a part of the slurry and replacement by new feed (4 percent every five days gave maximum gas production).

Maintenance As the Chinese digesters are constructed underground and have no moving parts, they require little maintenance. However, checking the plastering materials and joints of the digester for any

cracks is carried out each time the digester is emptied. It is very important that the digester is ventilated before one enters for cleaning or maintenance. One method used to check the atmosphere inside the digester is to lower a basket containing a live chicken. If the chicken dies, it is unsafe for a human.

Use of Biogas For most areas where biogas has been adopted, families can use it for about ten months out of the year. During the other two months they use firewood, coal briquettes, or straw and stalks for cooking and heating.

The Chinese have developed a number of burners and stoves for use with biogas. Most of these burners are simple in design and can be made locally from earthenware. Each commune designs its own type of appliances. Burners of several different kinds and sizes were seen during the visit. Figure 8 shows sketches of the most popular types of burners, all of which were developed in China. The burner is normally placed in a deep hearth which prevents heat loss and provides maximum heat transfer to the utensils.

Like the gas burners, the biogas lighting lamps are also of simple design. They are made of local materials such as earthenware. The lamp may be either hanging or standing. Most lamps are of about 40 candle-power illumination. The gas consumption per lamp is about 0.11 m^3/hr.

Research in China has determined that effective lighting using a generator run with biogas is more convenient and economical. In this case, the consumption of biogas is about 0.75 m^3/kWh. Twenty-five 40-watt electric lamps can be lit for one hour, whereas 0.75 m^3 of biogas can serve only seven biogas lamps for one hour. Generators of 3, 5.5, and 7.5 kW capacities have been put into mass production for matching with engines of 7.5, 10 and 12 HP, respectively.

With some slight modifications, both gasoline and diesel engines can be run on biogas. Because of the low cetane number, diesel engines will not run on biogas alone. Because biogas will not ignite solely with compression a distributor, magneto, and spark plugs must be added. Also, because biogas has a very slow combustion rate, the spark must be advanced considerably on both types of engines. These engines are mainly used where high power output is needed.

For engines normally run by a production team, the Chinese preferred to operate the diesel engines as dual fuel engines that operate on a mixture of 30 percent diesel fuel and 70 percent biogas. Here, the engine can be transformed easily and quickly to liquid fuel in case the biogas is not sufficient to meet the needs. Such an engine requires only the addition of a gas/air mixing device mounted at the rear of the air filter. This mixer consists of a valve, which controls the quantity of biogas, and a three-way flanged pipe connection. Two types of mixers have been developed: the direct intake mixer and the cross-pipe mixer.

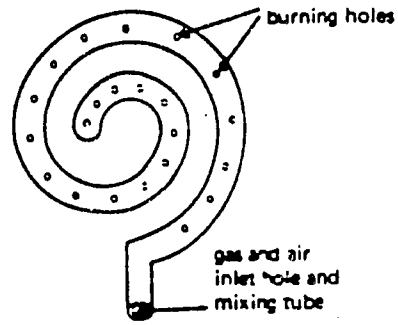

Fig. 7-6. The spiral single-pipe burner.

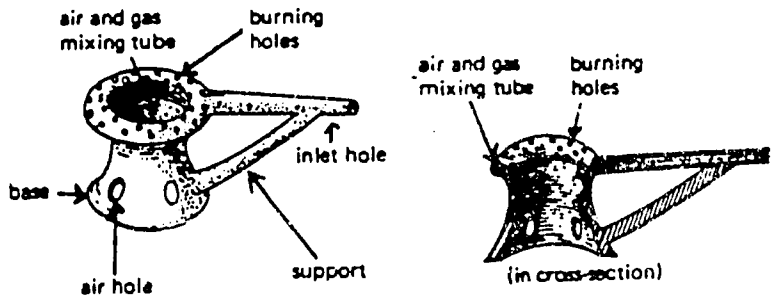

The long arm burner.

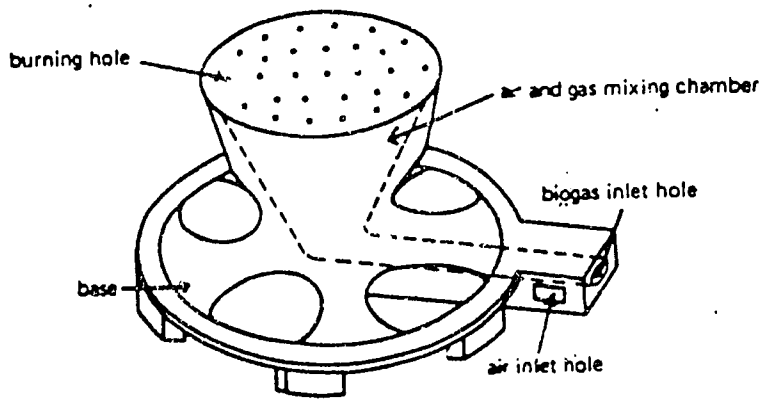

The showerhead burner

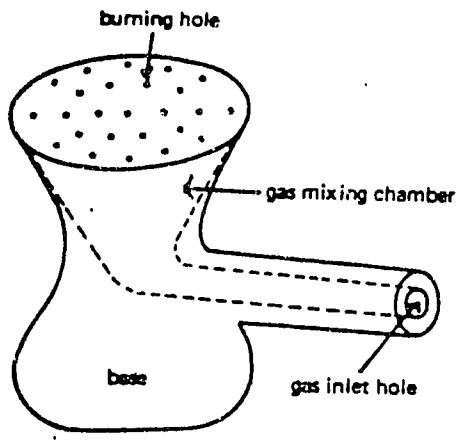

The L-shaped burner.

Figure 8 Biogas burners.

Diesel fuel alone is used in the initial start of the engine. When it is warm, the engine is then switched to the diesel fuel/biogas mixture.

Dual fuel engines are used to power such farm machines as grain mills, rice hullers, irrigation pumps, and small tractors with portable biogas storage plastic balloons. Engines are also coupled with electric generators to generate electricity for lighting or electric motors.

Use of Digester Manure

Through fermentation, organic substances such as human, animal, and agricultural wastes produce not only an excellent biogas fuel but also a large quantity of digested sludge and effluent. This digested effluent and sludge makes an excellent fertilizer. Experiments in various regions of China have shown that about 50-70 percent of organic substances in raw materials are digested, which amounts to 30-50 percent of the total dry matter. (This means that 50-70 percent dry matter can be recovered from the residue, of which 30-50 percent is organic substances.)

Digester manure consisting of sludge and effluent is the product of biogas fermentation. The sludge contains most of the nutrient elements and organic matter. The nutrient elements contained in the digester manure depend on what kind of raw materials were used. Using analytical data from many samples collected in Sichuan Province, the nutrient contents of a digester material are listed in Table 8.

Table 8 Approximate Range of Nutrients in Digester Material*

Digester material	Organic matter (%)	Humic acid (%)	Total nitrogen (%)	Total phosphorus (%) (P_2O_5)	Total potassium (%) (K_2O)
Effluent	--	--	0.03-0.08	0.02-0.06	0.05-0.10
Sludge	30-50	10-20	0.8-1.5	0.4-0.6	0.6-1.2

* Based on analytical data from samples collected in Sichuan Province.

A 10 m^3 digester can produce 30 tons of slurry and 15 tons of sludge per year. The effluent is applied to the soil as a top dressing and, if the quantity is large, it is also applied through the irrigation system. The sludge is usually applied during land

preparation before planting. The manure is plowed under or harrowed into the soil soon after it has been evenly sprayed over the land. When no land is open, it is heaped, plastered with mud, and kept until needed.

Rates of application of manures vary according to the crop, soil, season, and type of manure. These are determined by criteria such as the amount of nutrient, mainly nitrogen; the amount of manure that would optimize seed germination and seedling growth rate; the amount that can be physically deposited or incorporated into the land. Generally, sludge is applied at a rate of 60-70 t/ha and effluent at a rate of 20-30 t/ha for each application.

Biogas digester manure increases crop yields remarkably. The increase in production of sweet potatoes, rice, maize, and cotton as the result of manure application is shown in Table 9.

Table 9 Effect of Digester Sludge on Crop Yield

	Amount of digester sludge applied (jin/mu)	Yield (jin/mu)		Increase	
		Digester Sludge	Check	jin/mu	%
Sweet potatoes	2,250	3,236.0	2,863.0	373.0	12.1
Rice	2,000	871.9	798.9	73.0	9.1
Maize	3,000	667.5	617.7	49.8	8.3
Cotton	3,000	166.6	154.3	12.3	7.9

Field experiments suggest that digester effluent is better than open-air pool manure (see Table 10). Open-air pool manure is the sludge and effluent taken from lagoons that also treat and store night soil. There is an increase in yield of 6.5 percent for rice, 8.9 percent for maize, 15.2 percent for wheat, and 15.7 percent for cotton. The use of air-dried digester sludge (609 t/ha) has also increased the yield of rice by 9.1 percent, of maize by 8.3 percent, and of cotton by 7.9 percent.

The use of a mixed fertilizer (digester sludge combined with ammonium nitrate) has increased soil fertility and prevented destruction of the soil structure caused by using only large amounts of chemical fertilizer. Addition of 13.5 tons of sludge and 60 kg of NH_4NO_3 per hectare has increased the yield of rice and maize more than by the application of NH_4NO_3 or sludge alone.

Another type of fertilizer is made by mixing air-dried sludge with phosphite powder in a ratio of 10:1 or 20:1 and composting it for 1-3 months. Application of 1.5-3 t/ha of this fertilizer has increased the

Table 10 Fertility Comparison between Digester Effluent and Open-air Pool Manure

	Yield (jin/mu)		Increase		
	Digester effluent	Check	jin/mu	%	Number of tests
Rice	636.4	597.5	38.9	6.5	18
Maize	555.9	510.4	45.5	8.9	9
Wheat	450.0	390.5	59.5	15.2	29
Cotton	154.5	133.5	21.5	15.7	2
Rape	258.4	233.6	24.8	10.6	15

yield of rice by 12 percent and the yield of wheat by 15.7 percent. This type of fertilizer is used extensively in areas where the soil lacks phosphorus.

Digester sludge not only increases the yield of crops, but it also improves the soil fertility if it is applied continuously. The chemical and physical properties of a soil have been remarkably improved after 1-2 years' application of digester sludge (15 t/ha). A few of the advantages are the increase of organic matter content, total nitrogen, total phosphorus and available phosphorus; the decrease of the volume/weight ratio of the soil; and the increase of the percentage of soil porosity. Total yield of several crops has been increased by 11.4 percent in one year and 20.9 percent in two years of application of sludge, as compared with a nonamended soil.

In Sichuan Province, the dependence of agriculture on biogas is obvious. The annual requirements of nitrogenous fertilizers in these areas prior to the introduction of biogas were assessed at 35 kg/ha. This quantity was not available due to an overall shortage of chemical fertilizers. After using the slurry and sludge from biogas digesters, the annual requirement of chemical fertilizers (nitrogenous fertilizer alone) has now been reduced to only 20 kg/ha. This means that almost 50 percent of the chemical fertilizer (nitrogenous) normally used has been saved.

Implementation of Biogas Programs in China

Use of organic wastes in production of biogas has been known in China for many years. As early as 1958, some attempts to produce biogas were explored, but because of some technical difficulties and other reasons, further development was discontinued.

In 1970 some innovative proletarians in Sichuan Province tried to develop the technique again as a way to overcome the serious shortage of firewood. Up to 1973 only about 6,000 biogas units had been established. Since 1972 three meetings have taken place in Sichuan, attended by representatives from all the ministries concerned, to sum up experience from all over the country and to exchange information about rural biogas development. After the National Conference was held in Sichuan in 1975, an intensive program for the popularization of biogas was undertaken. Construction of biogas units increased and peaked during the years 1976-1978. As a result, by the end of 1978, about 7.15 million biogas digesters had been constructed in different parts of China. The distribution of these units in different provinces is quite uneven and appears to be dependent not only on climatic conditions but also upon local initiatives. This is evident by the fact that in Sichuan Province alone, the number of biogas plants number about 5 million. Most of these units are individual family units. More than 70 percent of the total number of the rural residents of that province are now organizing their lives around biogas. The capacities of these household digesters range from 6-10 m^3. In addition, there are about 600 to 700 large units owned and operated by the communes for electric power generation.

The following represents the number of biogas plants in Sichuan Province in the period 1970-1978:

Year	1970	1971	1972	1973	1974	1975	1976	1977	1978
Number (million)	.00005	.0005	.0028	.08	.44	1.5	3.4	4.3	5.0

At present, the construction of new units is not proceeding at such a feverish pace as in 1976-1978 because many of the areas of optimum climate for biogas production are nearing saturation. In other areas better extension efforts are still needed. Requisite technology has not yet been developed for adapting these plants to a colder climate.

Placement of Biogas in the Rural Economy of China

The extension of this program in China in such a short time could not have been possible without the general appreciation of the advantages of adopting biogas. The main benefits of the program which have enabled its popularization are as follows:

1. The gas produced consists of about 60 percent methane and is a convenient fuel for cooking meals. A family-size biogas digester of 8-10 m^3 capacity supplies enough biogas to cook the meals of an entire family. It must be emphasized here that the Chinese style of cooking, in which a boiled food is prevalent, uses less biogas compared to the requirements in other countries where food is fried.

2. The individual biogas digesters produce enough gas for lighting cheap gas lamps for three to four hours every day. This is especially valuable, as electric power has not yet reached a large number of villages.
3. The most important use of biogas technology is for production of organic manure. A large part of the cultivable area of China is double cropped. Inorganic fertilizer is in short supply, and large doses of inorganic fertilizer may degrade soil fertility in years to come. Under these circumstances application of large doses of organic fertilizers to the fields is essential. The biogas units not only provide the slurry at intervals, but they also make available the residue from the biogas digesters which are cleaned twice every year. This digester residue, having good fertilizer properties, is put on the land before the sowing of the two main crops of rice and wheat. The chemical fertilizer is diverted to regions where biogas has not been popular because of climate or other factors.
4. Use of biogas as fuel and for lighting saves kerosene and coal. It also eliminates the necessity of cutting down trees for firewood.
5. Almost all the vegetable and animal wastes in a rural home are put into the biogas digester, thus improving the cleanliness of the house and its environment.
6. The anaerobic digestion process in the biogas digester greatly reduces the extent of harmful organisms. It is claimed that 85-98 percent of the harmful organisms are removed in the processing of waste materials passing through the digester.

Adoption of the following principles appear to be responsible for the success of the program: the three-in-one principle according to which the human toilet, the pigsty, and the biogas digester are constructed as an integral unit (Figure 9); the use of local materials to suit local conditions; full and adequate support of the commune, the production brigade, and production team (there is also the important element of mass participation); and the simplicity of the digester design and construction technique, which enables the unit to be operated with no special skills.

Organization for Development of Biogas Technology

The development of biogas is the responsibility of a separate directorate under the Ministry of Agriculture in Peking. Most of the provinces that have adopted this activity on a large scale (for example, Sichuan, Kwangsi, and the centrally administered territory of Shanghai) have directories of biogas as part of the Department of Agriculture. There are, in addition, small units responsible for biogas development in the rural areas at the commune level. Biogas

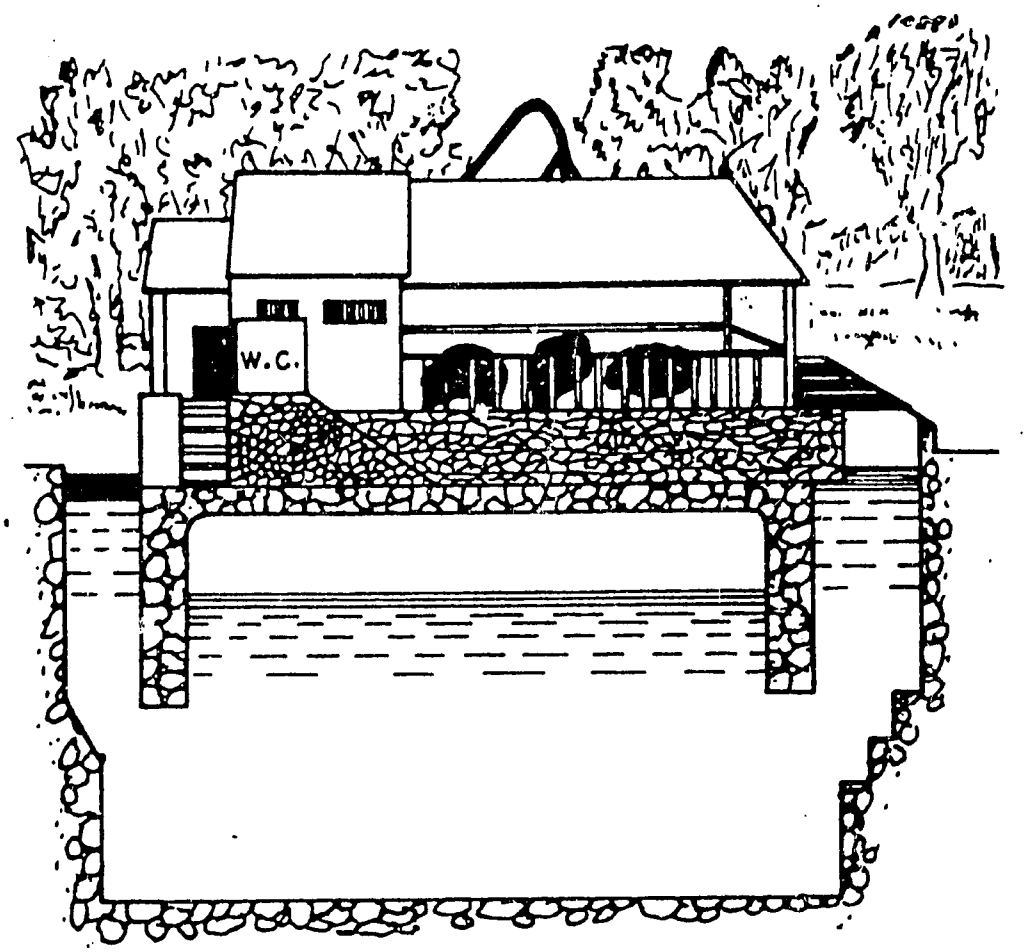

Figure 9 Three-in-one digester unit.

technicians are also attached to production brigades. There is one biogas technician in each production team.

Research work is an important activity of the biogas program. Research stations have been established at the provincial and commune levels. These research stations receive grants from the state and the communes. The commune subsidizes the cost of building materials for the biogas digesters from 20 percent in Sichuan Province to as high as 80 percent in the centrally administered territory of Shanghai. The bricks, cement, and lime used for construction are available from the production teams of the commune itself. The transportation of materials to the sites of the biogas digesters is done with tractors of the production team and is not included in the cost of the digester. Similarly, the labor in digging the pit and construction of the digester is done by the production team and is again not included in the cost. As such, the only cost is that of materials which costs 60-80 Yuan for a digester of 8 m^3 capacity.

Summary

Biogas technology has had a strong impact on the lives of many rural Chinese. The primary aim of getting more fertilizer back onto cropland has been very successful. Energy for cooking and lighting produced at the home level has kept the system simple. The emphasis on research and implementation at both local and national levels has helped the biogas program to be very successful and beneficial to a very large number of families. The simple, effective designs have evolved for others to use in developing biogas programs in other countries. China is truly the leader in biogas technology and biogas use today.

THAILAND

Background

Thailand, which was formerly Siam, is an independent kingdom in Southeast Asia. It occupies much of the western part of the Indochinese Peninsula, with a long stem extending south along most of the Malay Peninsula. Its area is about 518,000 km^2 and it has a population of approximately 30 million. Bangkok is the capital. Thailand contains more than 30 distinct ethnic groups. Several branches of Thais are united by a common language, although there are distinct dialects. All education in the country is in Thai, the script of which is derived from Sanskrit imported from India. The literacy rate is high, with more than half the population over 10 years of age being able to read and write. Education is compulsory for children between the ages of seven and fourteen. Bangkok is the only major urban area in the country.

Administration

Thailand is formally a monarchy, and all executive, legislative, and judicial decisions are made in the name of the king. The premier is the actual head of state and governs by decree.

Agricultural Organization

Thailand is predominately agricultural. Although less than one-quarter of its total land is cultivated, 85 percent of the population gain their living from farming. Rice is the major crop both for exportation and domestic consumption and occupies more than 85 percent of the total planted area. Rubber is the second most important export crop and is grown mainly on the peninsula.

An Overview

The research and development of biogas technology in Thailand is conducted by the following institutions which the team visited:

- The National Energy Administration, Technical Division, Research Station

- o The Asian Institute of Technology, The Environment Engineering Division
- o Faculty of Agriculture, Kasetsart University Department of Agricultural Engineering
- o Faculty of Public Health, Mahidol University

Additional projects not visited are being carried out by:

- o Division of Agricultural Economics, Ministry of Agriculture and Cooperative (demonstration project at Chainat--see Figure 10)
- o Division of Agricultural Engineering, Ministry of Agriculture and Cooperatives, Department of Engineering Agriculture
- o Department of Animal Husbandry, Kasetsart University, Faculty of Agriculture (see Figure 11)
- o Sanitary Division, Department of Health, Ministry of Health (see Figure 12)

The activities of the above groups, except for those of the Department of Agricultural Engineering, Kasetsart University, were evaluated by Chantavorapap (1978) in a report for the Expert Group meeting on Biogas Development in Bangkok, Thailand. Previously, in 1975, a report by the Preparatory Mission on Biogas Technology and Utilization, authorized by the ESCAP (Economical and Social Commission for Asia and the Pacific), said that biogas utilization in Thailand had started in 1970 with a project promoted by the Agricultural Economics Division, the Sanitary Division, and the Animal Husbandry Department (Kasetsart University). The government provided subsidies for the gas holders. In 1975 there were 150 units. In addition, several other activities were recorded by the ESCAP reports (1976-78) in the following institutions:

- o Division of Agricultural Chemistry, Ministry of Agriculture
- o Research Policy and Promotion Section Office, National Research Council of Thailand
- o Institute of Agriculture Technology, Maejo Chienmal
- o Institute of Rice Research
- o Environmental Education and Research Project, Mahidol University
- o Environmental Research Department; Applied Scientific Research Corporation

It was observed that each institution works independently and that integration of the programs has not been accomplished. For example, the National Energy Administration (NEA) as well as the Agricultural Engineering Department of Kasetsart University were interested in the power and electrical utilization of biogas. On the other hand, the Faculty of Public Health is planning for a more integrated system combining the energy and fertilization uses with the hygienic objectives. Research and development are still in the early stages.

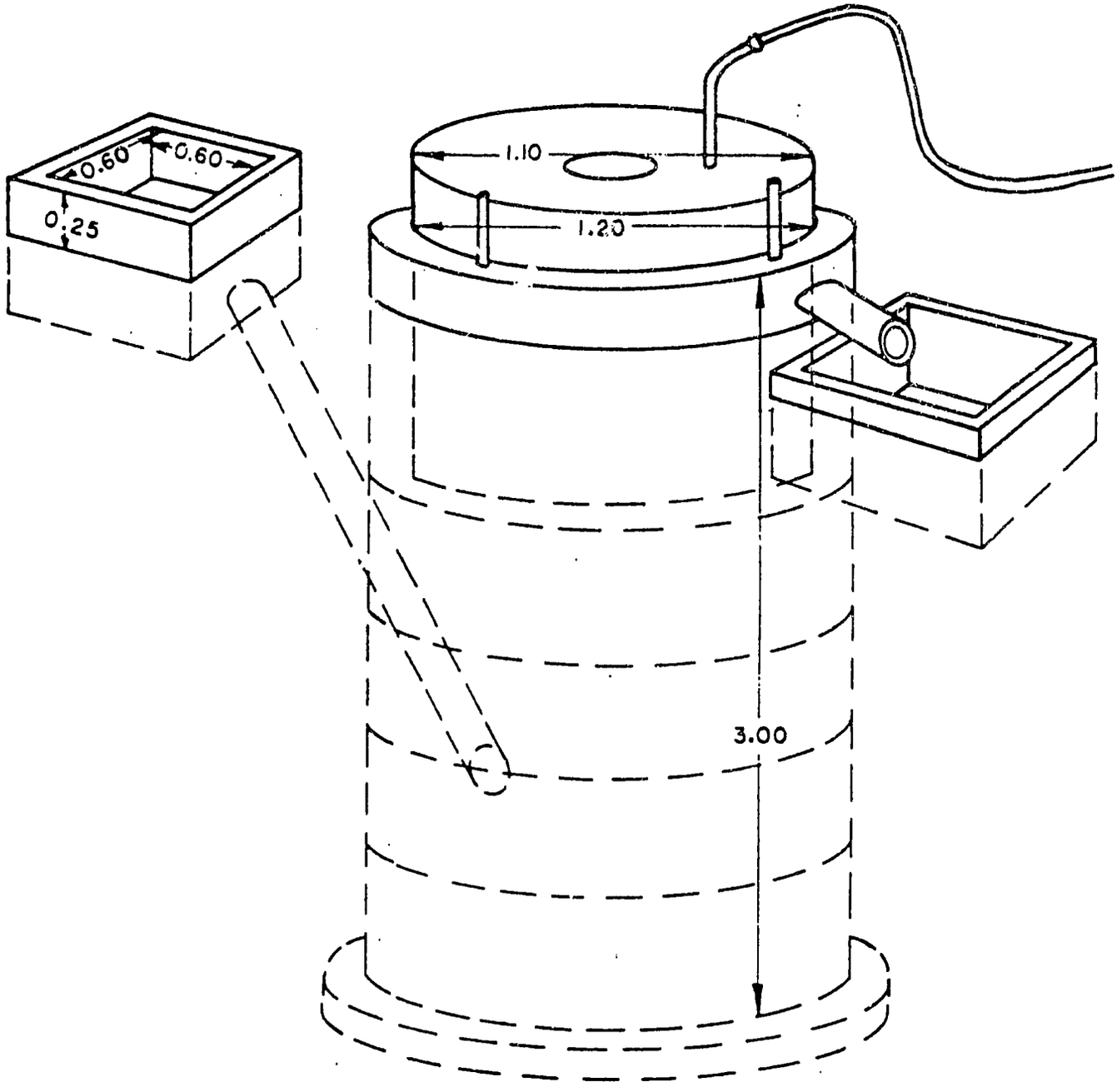

Figure 10 Division of Agricultural Economics digester.

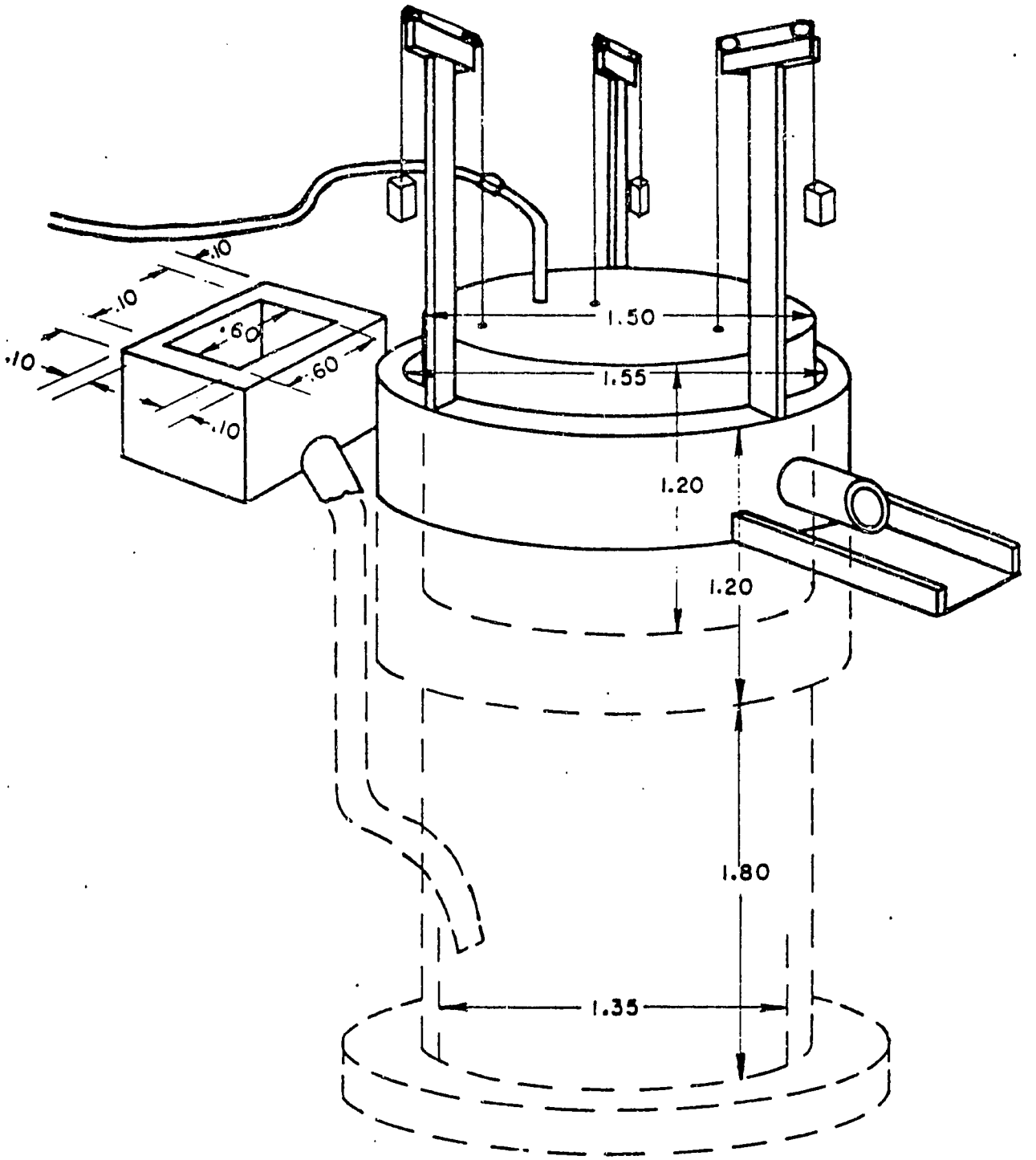

Figure 11 Department of Animal Husbandry digester.

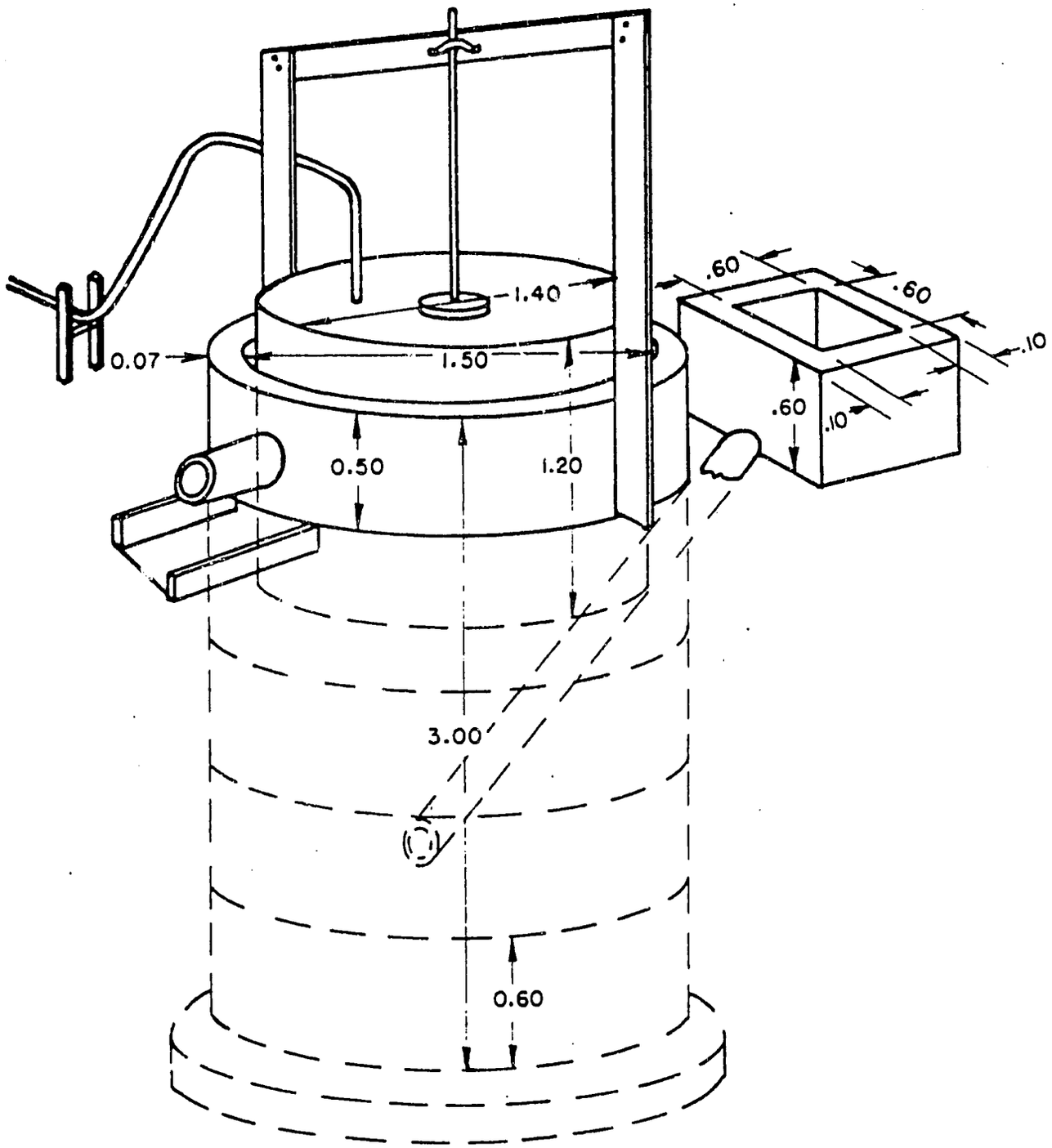

Figure 12 Department of Health digester.

Visits to Digesters in Thailand

Nakorn Phatom Province (40 km from Bangkok)

Biogas technology in this area made use of the water-jar technology already developed. The construction techniques for cement jars used for collecting rainwater are well known. The jar (1.2 to 2 m^3 capacity) was modified by adding inlet and outlet tubes and a cement disc cover. The jar costs about $20 (400 Bhats). It is fed daily with the dung of two cows and has a volume of 20 liters (1 peep). The dung is diluted with water (1:1). The retention time in the digester is about 30 days. The water jars are built from cement by specialized workers at home, or in small factories, where the family members work together to mold three jars per day. The gas outlets from two to five jars can be connected in parallel to feed one gas holder made of steel. The construction costs were subsidized by the government. Figure 13 shows two water jar digesters connected to one gas holder.

The observation team was told that the steel holder was cheaper than a wooden one. One kg of cow dung gave 30 to 40 liters of biogas, and 1 m^3 biogas gave 5,000 kcal. Assuming that one person needed 600 kcal for cooking per day, and assuming an efficiency of 50-60 percent for burning, the actual need would be 1,000 kcal per day per person. This requires 200 liters of biogas per day, which can be drawn from 5-6 kg of cow dung per day.

Four hundred units (biogas jars) have been constructed. About 200 are working. The reasons given for the nonworking units were that the technicians (promoters) were not well trained, and that people overloaded the digesters because their primary reason for using a digester was to get rid of the animal excreta.

Another type of digester was a modification of the Indian KVIC type. The modification was said to lessen iron corrosion of the gas holder. The cylindrical digester was double walled. The space between the double walls contained water in which the lower cylindrical part of the gas holder was immersed. In this way, it is kept away from the fermenting slurry which promotes corrosion. The top of the gas holder was covered with a blanket containing wood chips as an insulating device.

Agricultural Engineering Department (Kasetsart University)

The research and development work was concentrated on the utilization of biogas for power production. Gasoline engines were chosen to run on biogas. A modified engine, designed by an Indian engineer, was used. It produced 8 HP. Another one-cylinder engine (3 HP) starts with gasoline, then is switched to biogas. The fuel-to-air ratio was 1:15 for gasoline and 1:10 for biogas. The engine was directly coupled to a water pump. It pumps 20 m^3 of water using 1 m^3 of biogas operating at 1 m head. A mantle lantern that worked at a high pressure of 50 cm of water was tried for

Figure 13 Water jar digesters and a gas holder.

illumination. The research farm contained three digesters, including a two-stage digester. None were in working condition. One of the digesters (1.6 m^3) was built of galvanized iron, had a rectangular shape, and cost $100 to construct. The other two were of the Indian type (Animal Husbandry, Kasetsart Agricultural University model).

Faculty of Public Health (Mahidol University)

This was a joint project with the first area health center. The outcome of the project was a modification of the first model of digesters introduced to the public by the health center in 1965.

The research was aimed at reducing health hazards of human and animal wastes and producing a good fuel for rural people. Considerable research was done on how to run digesters and how to utilize various feedstocks in the digesters. A large digester had been constructed on the King's farm. This gave biogas digestion wide visibility. We were not able to visit this digester due to time limitations.

Research Station of the Technical Division,
National Energy Administration

The NEA is involved in their first five-year, nonconventional energy study and development program. This program started in early 1977. Wind, solar heat, and biogas are the main energy sources involved in the program. Different experimental and full-scale units of biogas digesters were run under different conditions to study the variables affecting the energy yield. The use of biogas for mechanical power as well as for electric generators was under study.

In early 1978 a survey was done on the utilization of the biogas digester in Thailand (Chantavorapap 1978). In spite of the short period of biogas implementation and small number of biogas plants, the NEA reported on the attitudes of the owners using biogas plants (Chantavorapap 1978). A small number of biogas plant owners (98 owners) were thoroughly evaluated to determine their attitudes about their investments in the biogas plants, the problems they had using the biogas plants, the reasons for the limited popularity of biogas plants, and their recommendations for the improvement of biogas situations. That survey is a good model for what can be done in the early stages of biogas technology implementation.

Although we did not visit them we learned about two other projects of interest. One was a prison with 60,000 inmates ran a biogas project in which a septic tank was transformed into an anaerobic digester. The outlet liquid, as well as the sludge, was led to a sand bed (on the ground) where it stayed for one month. The project was to produce organic fertilizers. The system removed 40 percent of the volatile solids as biogas. The manure used came from a piggery where pigs were fed on a mixture of feedstuff containing antibiotics. The methane constituted more than 20 percent of the volume of the biogas. In the

other project, a grade school established a 4 m^3 digester. The pupils brought the manures from their houses. The gas was then used at the school for cooking.

Summary

Biogas technology in Thailand is in the early stages of implementation. Researchers are trying to modify foreign designs to use local materials and to create new designs that suit the local craftsmen. Promotion of the technology and extension programs are not yet implemented. The climate of southern Thailand is very favorable for biogas production. The energy from digestion is the sought-after product, and the residue from the digester is not widely utilized.

INDIA

Background

India is a republic in southern Asia bounded by China, Nepal, Bangladesh, and Pakistan. The capital is New Delhi, and the republic occupies a major part of the Indian subcontinent. India occupies an area of about 3.11 million km^2 and has a population of approximately 900 million. The official Indian census lists some 845 languages and dialects, but 95 percent of the population speaks one of the fifteen major languages as its mother tongue. English is spoken a great deal and Hindi is the official language. As for religion, 80 percent of the population is Hindu, 10 percent is Moslem, and 2 percent is Christian. Various other religions account for the remainder. The standard of living in India is low. A number of economic plans have vastly increased the amount of agricultural production to the point where India is now self-sufficient in wheat and rice.

Administrative Factors

India is a sovereign democratic republic with a constitution adopted in 1949. The chief executive of the union is the president elected for a five-year term by the legislature of the union and the legislature of the states. The parliament of the union consists of two houses and the president.

Agricultural Organization

Indian farmers are independent growers of food. They own land and animals individually. They have access to credit, and they sell on open markets. They also have access to extension agents and training programs. Farmers often have only one or two head of cattle. These are kept mainly for milk production. The main agricultural crops are wheat and rice. Seventy percent of the population is directly dependent upon cultivation for the major or entire part of its livelihood. The majority of the population eats little or no meat or fish. Food grains provide 50 to 80 percent of the calories in the average diet. Commercial crops grown in India include cotton, jute, sugarcane, and tobacco.

Development of Biogas Technology in India

India has the world's second largest biogas program, surpassed only by China, and its interest in biogas probably has the longest history. The manure or dung from cattle has been used for centuries as fuel. The dung is collected from behind the roaming cattle. It is mixed with some water and straw and is then shaped into patties or crescents and dried in the sun. These crescents are then burned for cooking food. Figure 14 shows a typical scene in an Indian village where the dung cakes are drying. This fuel collection and processing takes a lot of time, effort and is wasteful because the nutrients in the dung are wasted. Biogas plants can produce clean energy for cooking and preserve the nutrient value for crops at the same time.

The impetus for the propagation of gas plants in rural India stems from the Gandhian ideology and concept of evolving a self-sufficient and self-reliant economy at the rural level based on principles of democratic decentralization of rural development programs. In India, the history of biogas plants utilizing cow dung falls into three phases:

Phase One: Experimentation Phase (1937-1950) This phase includes early research work and experimentation carried out at the Indian Agricultural Research Institute (IARI) by Acharya, Joshi, Idnani, Desai, and others. The IARI had taken up studies relating to purification of municipal sewage by anaerobic digestion. This was then extended to the study of anaerobic digestion of cattle dung by the year 1939. A batch-type cattle dung digester was developed by IARI in 1946. This model did not become popular because of its high initial cost. Further research and development work was carried out to decrease cost and increase gas production.

Phase Two: Pilot Phase (1950-1962) During this pilot phase, a plant with a gas holder above the open digester which could also rotate was designed. It was named the Gramlaxmi gas plant and was patented in 1951. The main feature of the plant was the comb nation of gas holder and digester in one unit. Fresh slurry is fed daily or at regular intervals with an equal amount of digested slurry displaced from the digester. The inlet and discharge openings were left open. About the same time, Swami Vishwakarmanand and Satish Chandra Dasgupta, working simultaneously but independently, constructed a digester using half split bamboo for the digester lining, thus eliminating the brick work. This method led to a reduction in the cost. The IARI adopt this design but replaced the bamboo lining with bricks.

Phase Three: Extension Phase (1960-present) The Gramlaxmi III model, developed by Tasbhai J. Patel, was an improvement on the previous model. It had a brick-work main body constructed below ground level

Figure 14 Cattle dung cakes drying in the sun.

and was provided with two pipes, one for feeding and the other for discharging. Its gas holder did not need counterweights. Simultaneously, the Planning, Research and Action Institute (now a division of the State Planning Institute, U.P., Lucknow) undertook the design and construction of the Gobar gas plants. Different designs and sizes were constructed at the institute's research station in Ajitmal (Etawah District), and their performance was evaluated. The careful documentation of results at the institute's station aided in further improvements of biogas digesters.

The Khadi and Village Industries Commission (KVIC), Bombay, began the implementation of the Gobar gas scheme in a planned way in 1962, adopting the Gramlaxmi III model. With the involvement of KVIC in this program, different capacity plants were constructed throughout the country. However, only 6,000 units were built by 1974.

The slow growth of the number of biogas plants has been due to lack of active support from the state and central governments. However, the energy crises of 1973, which led to an increase in the price of fuel and pushed the rural Indians into the environmentally disastrous use of firewoods, persuaded the government of India to promote biogas plants more seriously. India has launched a program for the popularization of the Gobar plants as a part of its integrated strategy for rural energy supply.

In 1973 a technical committee was formed to study the difficulties that prevented the wider adoption of Gobar gas plants. The committee found that high maintenance costs and the technical problems of welding gas holders were acting as bottlenecks in the propagation of the biogas scheme. The associated maintenance costs, corrosion of the gas holders, and lack of proper maintenance were among the major reasons that affected the wider adoption of biogas plants.

The committee concluded that "the initial costs, for even the smallest size biogas plant, is well beyond the reach of a normal farmer. It has been estimated that steel and cement account for nearly 40 percent of the total cost of a biogas plant." The committee also emphasized the need for investigating "drumless" gas plants. These suggestions of the committee were taken into consideration during the development of the Janata model of biogas plant by the State Planning Institute, U.P.

In the last five years, over 75,000 biogas plants have been set up, and by the end of 1983 the government hopes to have established 500,000 plants. These plants will create an annual production capacity equivalent to 750 million liters of kerosene. In addition, they will generate about 12 million tons of organic manure, which otherwise would have been used as cow dung cakes for fuel. However, compared to the total biogas potential within the country, the current rate of utilization is extremely small. According to official estimates, India has a potential of at least 18,750,000 family-size biogas plants and 560,000 community-size plants with daily capacities of 1.7 and 142 m^3 of gas, respectively. While the family-size

plants could be used by richer rural households (with 4-5 head of cattle), the community-size plants could supply energy to poorer households.

Visits to Research Stations, Institutes, and Digester Sites in India

Research Farm of the Indian Agricultural Research Institute (IARI) This dairy farm on the outskirts of New Delhi has several digesters of the Kadi Village Industries Commission (KVIC) type, which had floating covers made of welded steel and counterweights hung from cables and pulleys. Lamps and burners were also seen at this site.

Indian Agricultural Research Institute The director of the institute, the soil science department head, and fertilizer specialists discussed the fertilizer value of the digester effluent. Trials on crop growth showed that the crops responded very well to the effluent from digesters.

Planning, Research and Action Division (PRAD), State Planning Institute, Lucknow The training center outside of Lucknow has several digesters. These are used to train technicians for building digesters. Visual materials were also being made to show the benefits of the biogas plants. The team visited several Janata-type plants in the area that were working well.

Community Digester--Etawah The village of Fateh-singh-ka-purwa was a demonstration site for a community-size plant. A 35 m^3 and a 45 m^3 production capacity plant were connected in parallel and were used to produce electricity, cut fodder, grind corn, and pump irrigation water. Each person in the village was to put in dung and to be able to remove effluent. A pipeline carried gas to all houses for cooking and lighting. Electric lights were provided in each house and were lighted if the generator was running. No charges were made for gas or electricity. The plant seemed to be running well and the village had a very homogeneous membership that was almost all of one caste.

Gobar Gas Research Station--Agitmal The research laboratories at Agitmal are where Ram Bux Singh and others have performed many experiments. Digesters of many sizes are in existence. Various shapes and materials of digesters and gas holders have been tested and are used for training. Thermal control through heating, and insulation have been tested. Experiments with mixes of dung and water

hyacinth have been successful. Many different types of gas appliances have been tested here. Small machines for extruding plastics have been tested using biogas as the heat source.

Demonstration Village Supported by Indian Explosives Company This village near Agra has been the site of a program supported by the Indian Explosives Company. By providing education, credit, and construction they have helped to elevate the village to a higher standard. Here we saw the only stable for cattle where the urine was collected and put into the digester. Also, a toilet fed into the digester. The effluent was used for fertilizer.

Okhala Sewage Gas Plant and Compost Plant In this very large sewage treatment plant serving part of New Delhi, the primary and secondary sludge is put into very large digesters. The biogas is put into a special pipeline and sent to 500 families. The gas displaces kerosene and charcoal for cooking in these homes. The compost plant treats organic waste in a mechanically aerated plant.

New Delhi Industry Fair The Kadi Village Industries Commission (KVIC) section had an educational display about biogas showing how the digesters work and benefits of their use. A complete working biogas plant was in the display and appliances were burning the gas.

Plants in Kasindra and Bharati Ashram Four KVIC plants were visited which had been modified to avoid dilution by rainwater. This area near Ahmadabad has a much higher rainfall, and dilution is a problem.

Factory for Mini-Gobar Gas Plants The factory produces mini-Gobar gas plants that can be used by farmers who have only one or two animals. These plants are made from coated steel sheets, can be transported to the farm site and put into use, and are cheaper than plants constructed on site. The Gujarat Agro Industries Corporation, Ltd., markets the plants and provides services for larger plants.

Hotel Vishala This rural hotel is also an entertainment spot. The owner buys cattle dung to feed his digester, which is a horizontal tunnel type with a floating glass holder. By digesting the dung, he has improved the sanitation of the hotel's kitchen and reduced odors in the hotel. The gas is a clean fuel for the kitchen. The effluent is dried, bagged, and sold as garden fertilizer.

High Rate Composter In a high-rate rotating composter, garbage was aerated and formed into fertilizer.

Slaughterhouse Digester The waste from the animals in the slaughterhouse pens is put into a large digester. The gas is used to cook meals for the workers. Figure 15 shows the animal waste being fed to the digester.

Kora Kendra The Gobar Gas Research and Development Center at Kora Gramodyog Kendra has an integrated program for rural development. KVIC operates this station. Various types of gas holders were under test. On display and test were galvanized iron, polyvinyl chloride (PVC), flexible plastic, and hard bitumen. Many types of burners were being tested and made.

Design of the Indian Digesters

The Floating Roof Gas Holder Digester (KVIC Type)

The main feature of this type of plant, as shown in Figure 16, is the combination of gas holder and digester in one unit. The digester consists of a pit dug underground and constructed with brick masonry. Two pipes, one for feeding and the other for discharging the digested slurry, also are used. The feed pipe ends near the bottom of the digester; the discharge pipe opens at ground level. At the upper end of the feed pipe, a small brick tank is built where the dung and water are mixed before feeding.

The gas collects in a steel gas holder or drum, which is inverted over the slurry and moves up and down, guided by a central guide pipe with accumulation and discharge of gas. The gas holder also has a rotary movement that is used to break up the mat formed on the surface of the slurry in the digester.

The weight of the gas holder is designed to give a pressure of about 9 or 12 cm water column. The gas holder alone accounts for about 40 percent of the total cost of the plant. Apart from contributing to high initial capital cost, defects in welding and corrosion due to hydrogen sulfide result in leakage. To overcome this problem, the gas holders are painted every year which adds to the maintenance costs. Not only the skill involved, but also initial construction and maintenance costs, are beyond the reach of most villagers. In addition, the mild steel angles and sheets that go into the construction of a conventional biogas plant are not available within the village community.

Because of the high cost of steel, and also because of corrosion, alternative materials such as fiberglass and synthetic materials have been tried. However, the cost of these materials has risen sharply due to the increase in the cost of petrochemical-based materials.

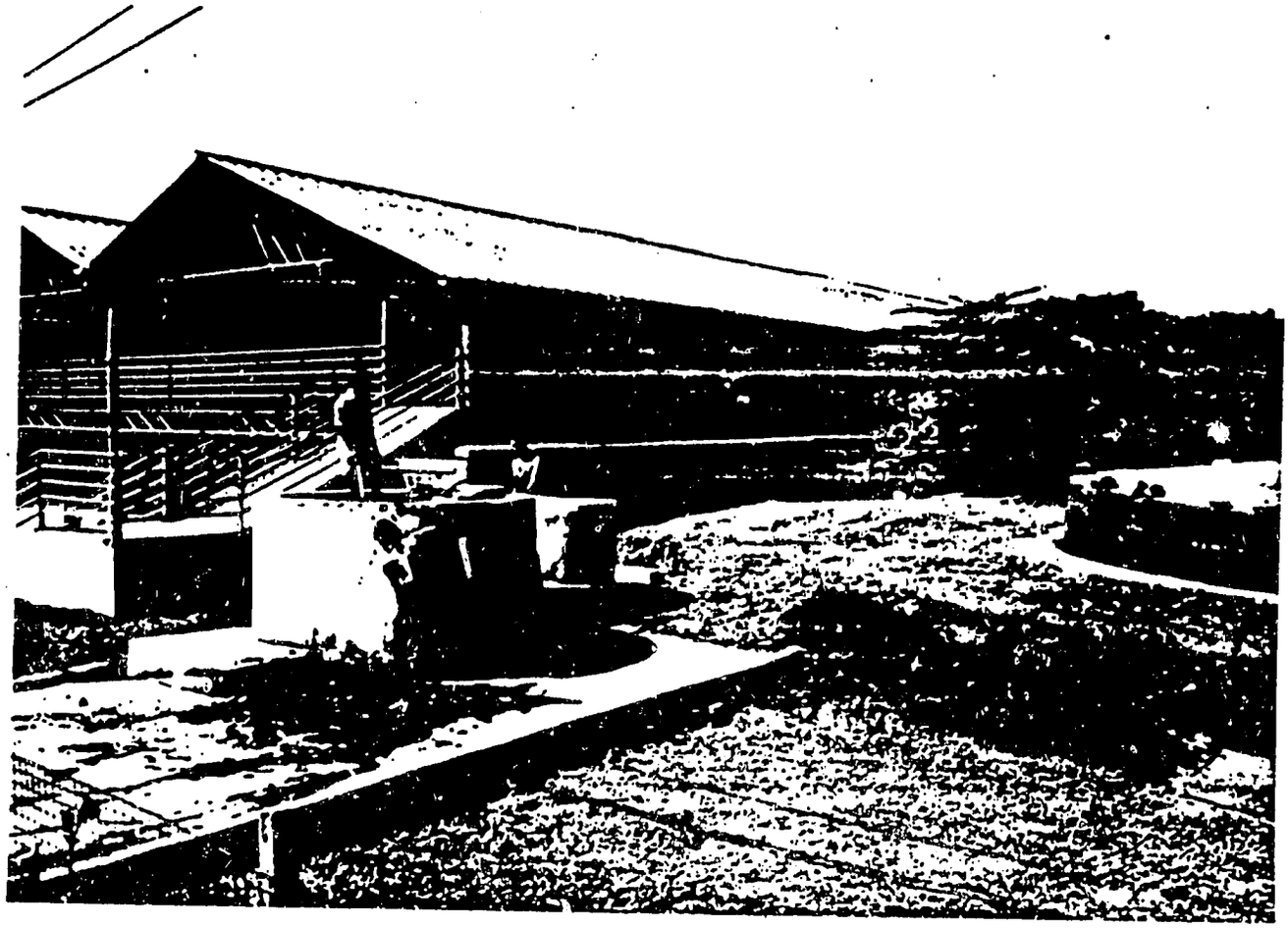

Figure 15 Biogas plant at slaughterhouse.

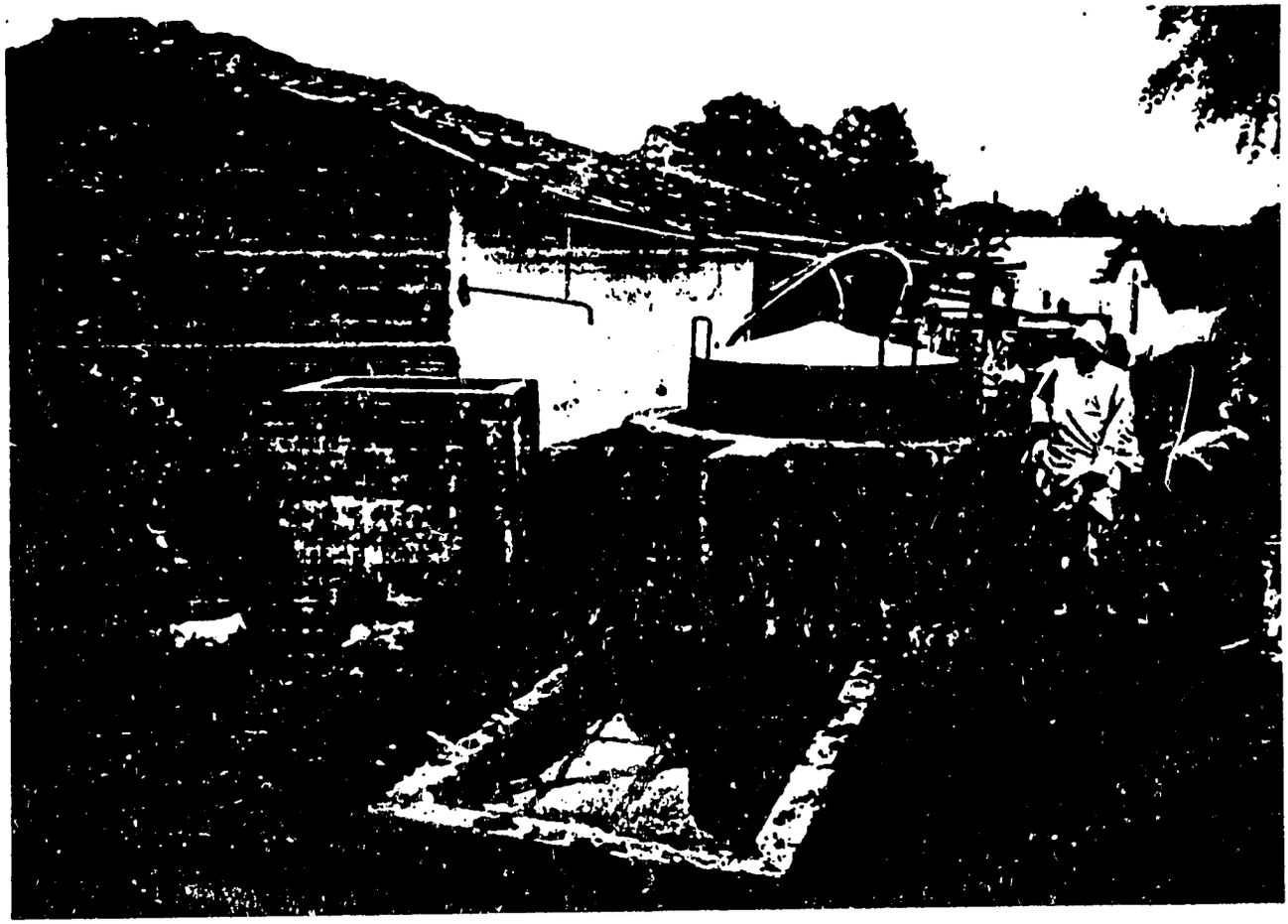

Figure 16 KVIC type digester.

The possibility of manufacturing gas holders with cement, that is, ferrocement, is being tried. In the use of ferrocement gas holders there are some problems of maintaining the thickness of the gas holder which requires skilled hand-processing. However, it was observed that the ferrocement gas holders are 20 to 30 percent cheaper than the steel gas holders.

Janata Type (Drumless)

The distinctive feature of this design, shown in Figure 17, is that the gas holder and digester are combined in one unit. There are no moving parts in this design, and maintenance costs are kept at a minimum. The whole plant is underground, made of cement, sand, and bricks, with a sloping inlet and a rectangular plastered outlet. The crown of the dome has an opening provided with a cement concrete disc which covers the opening at the crown of the dome and is sealed from all sides and held in position by its own weight.

The gas formed in the digester ascends to the top of the dome and exerts pressure on the slurry pushing it down. The depressed level of the slurry in the tank provides the necessary pressure for the gas. As the fermentation tank gets its daily feed, an equivalent quantity of slurry flows out through the outlet. The fermentation tank is so designed that it can hold about 50 days' feed.

The first pilot drumless biogas plan was constructed in March/April 1977 by the Gobar Gas Research Station, Ajitmal. It was painted inside with two coats of enamel paint. The depth of the digester wall was about 2 m and the diameter about 3 m.

The gas production efficiency of Janata biogas plants is about 0.04 m^3 per kg cattle dung at 24 to 27-1/4C. The average cost of installation of Janata biogas plants of various capacities is shown in Table 11.

Table 11. Estimated Cost of Gas Plants of Various Size (June 1979)

Size of Plant cubic meter	Estimated Cost	
	Rs.	US$
2	1650.00	($206)
3	2250.00	($281)
4	2910.00	($364)
6	5760.00	($720)

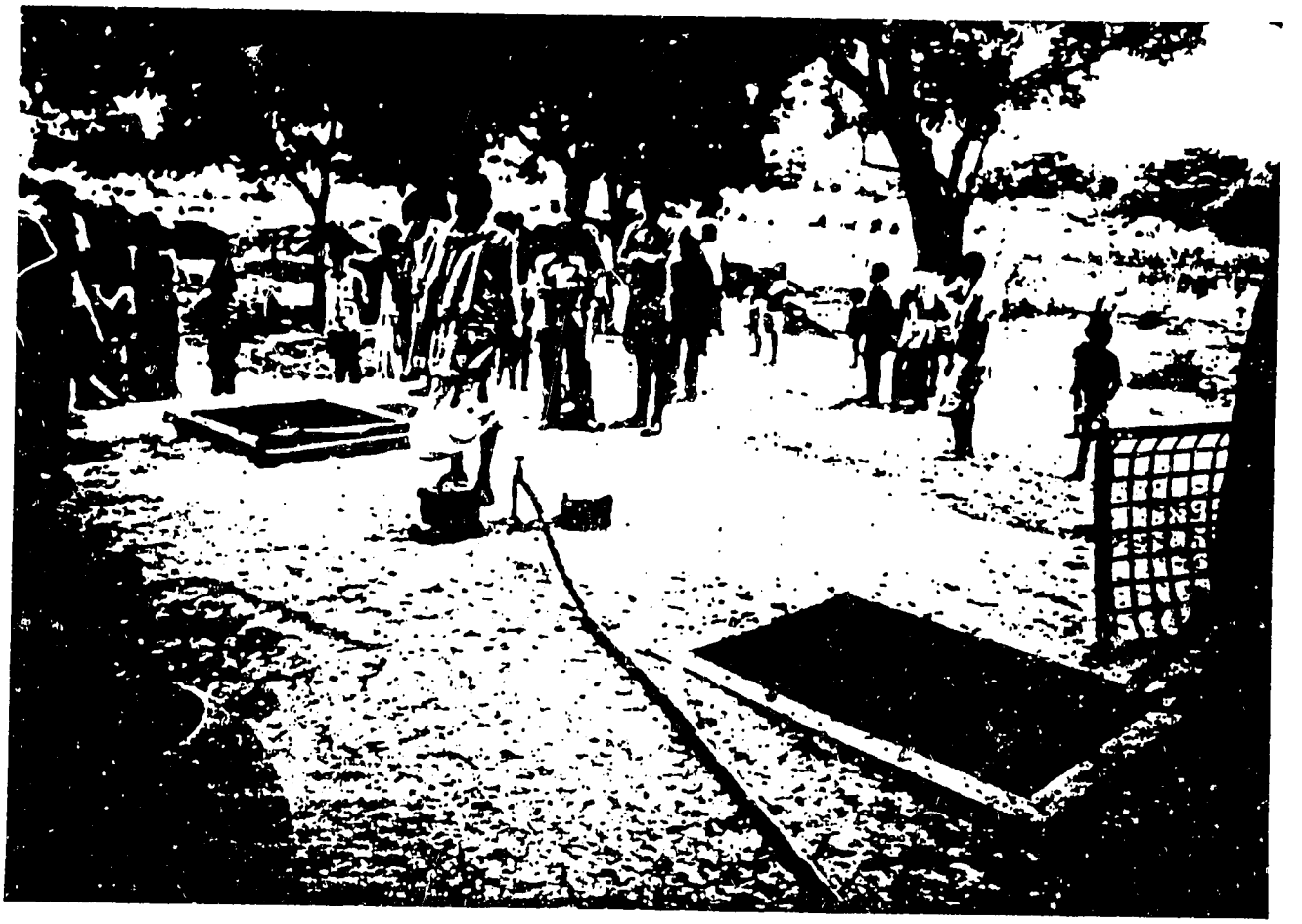

Figure 17 Janata type digester.

The site for installing a Janata biogas plant should be chosen keeping the following points in mind:

- o The plant should be located on even ground where the water table is not less than 3 m from ground level. Location at a high point will facilitate discharge from the outlet chamber into a slurry pit.
- o It should be near point of use, but at the same time it should not be far from the cattle shed.
- o It should be so located that it remains exposed to the sun for as long as possible.
- o It should be at least 10 m away from any underground source of drinking water such as a well or hand pump.

Horizontal Digesters

A horizontal digester was developed by KVIC for areas where hard rocks or high water tables make excavation costly. The digester is connected to the inlet by a tube of masonry.

Mini-Digesters (Ready-made)

To solve the problem of farmers who have only one or two head of cattle, the Gobar Gas Division of Gujarat Agro-Industries Corporation has innovated a mini-Gobar gas plant. This plant (Figure 18) is made of galvanized iron and is available as a ready-made unit. It is installed above ground and requires only a small area of land (1.5 x 1.5 m). The plant is portable so it can be moved to any location.

Community-size Biogas Plants

Along with small family-size plants, a program for the construction of community biogas plants has also been implemented. The first attempt was made by the Rural Electrification Corporation Limited in collaboration with the Ministry of Agriculture and Council for Industrial and Scientific Research. A plant has been installed at Kodumunja Village of Sircilla Block in Karimnagar District of Andhra Pradesh. The dung collected from 300 cattle is fed daily to the digester which then produces 128 m^3/day. This is sufficient to supply 30 families with gas for cooking purposes for four hours each day. The total investment cost of this plant, including a gas distribution line, is Rs. 100,200 ($12,525).

To study the impact of a decentralized energy system on the development of rural society, a pilot project has been set up by the Planning, Research and Action Division of Ulter Pradesh. Two biogas units, which produce 35 and 45 m^3 of gas per day, have been

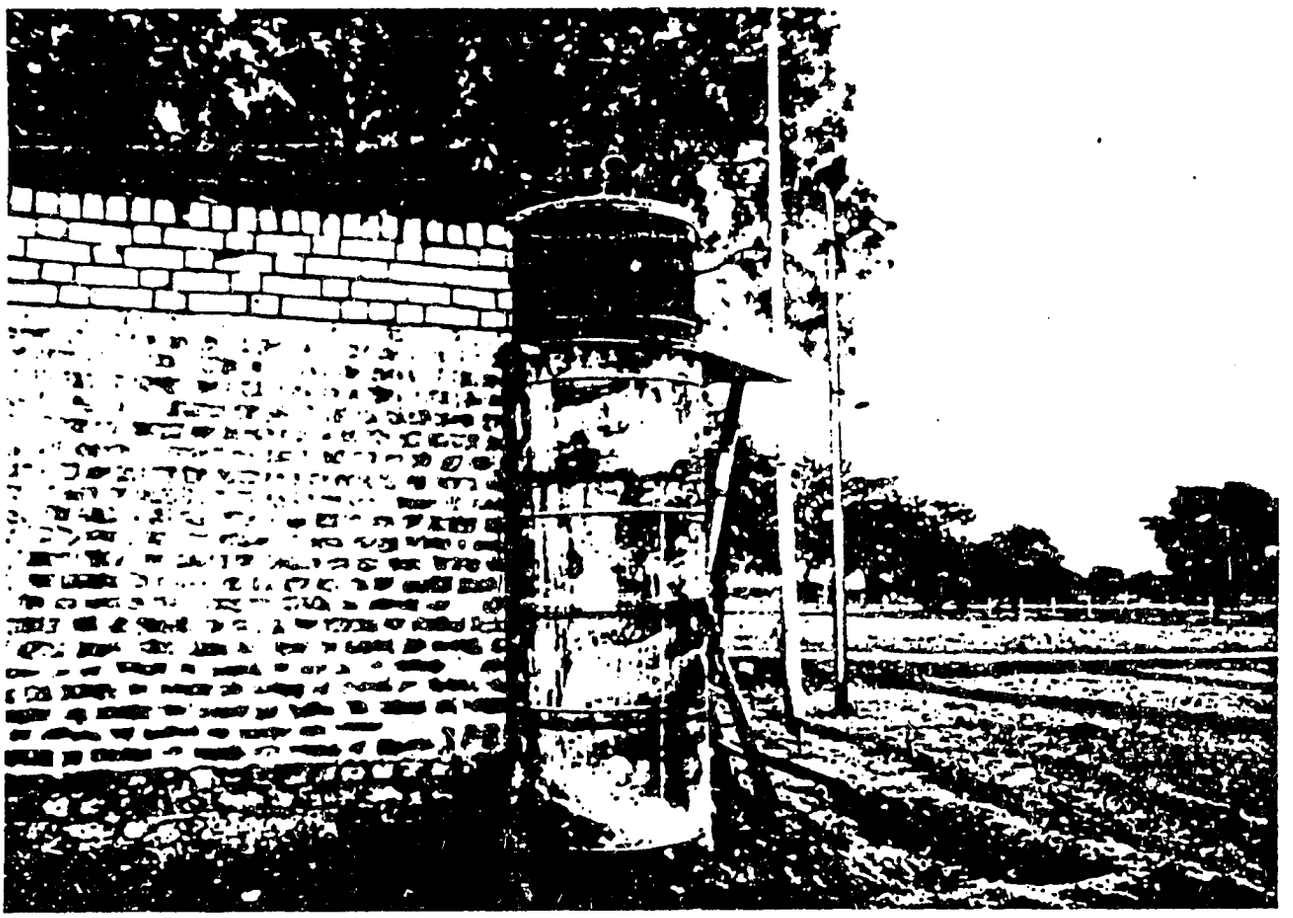

Figure 18 Mini-Gobar gas plant.

installed at Fatah-Singh Ka-purva Village in Etawa District. The dung collected from 127 cattle, about 800 kg/day, is fed daily to these plants. The gas is piped to the 27 households of the village for two hours in the morning and two hours in the evening for cooking. In addition, one 7 HP dual-fuel diesel engine is being installed to run a water pump, flour mill, and chaff cutter for community use. The investment of this pilot project is estimated to be Rs. 156,000 which is being funded by the United Nations International Children's Emergency Fund (UNICEF).

The comparative study of the economics of small and large gas plants have revealed that the cost of one cubic meter of gas produced from a large size plant is comparatively lower than that produced from small or medium-size plants. The feasibility study also revealed that the project is economically viable.

Materials Used for Gas Production

So far, cattle dung has been the main source of biogas production. However, some plants have also been set up using night soil; due to social prejudices, however, this practice has not caught on. Experiments have been conducted to determine the possibility of using other organic wastes such as sawdust, tree leaves, wheat straw, groundnut husks, bagasse, and water hyacinth.

Efforts are being made in various agricultural universities and research centers to find new feedstocks for biogas plants. The KVIC itself is experimenting with plants that use agricultural wastes (straw from wheat or rice, for example) with not more than 5 percent dung. Another possibility is water hyacinth, a weed that grows prolifically in various parts of India. The PRAD workers have already found that a mixture of water hyacinth and dung in the ratio of 2:3 gives an increase in gas output of 40-50 percent. The slurry is also richer in nitrogen, phosphates, and potash. The KVIC is also experimenting with biogas plants that use urine as a feedstock. In some states, the villagers are beginning to show less aversion to using human wastes in biogas plants.

The KVIC proposes to set up five regional biogas experimental centers to try out various types of biogas plants with a range of feedstocks in different agroclimatic, socioeconomic, and resource conditions. This type of research should help identify the best designs for different regions.

Utilization of the Biogas Plants' Products

The two main products of a biogas plant are gas and manure. The gas is used as fuel for heating, lighting, and motor power. Gobar gas consists of approximately 55 percent methane and 45 percent carbon dioxide. Since the composition of this gas is different from

conventional gases, the appliances (for example, burners or lamps) to be used must be of special design. The Khadi and Village Industries Commission, after long research, has finalized the designs of appliances suitable for the gas. Metallic burners and stoves developed by the KVIC and the Bengal Scientific and Technical Works Ltd., in Calcutta, are now widely available in the market. Burners with capacities ranging from 0.22 to 1.12 m^3 gas/hr have been manufactured and are widely available. The efficiency of these burners is quite high (60 percent). The gas-to-air ratio can be controlled through an air-screw adjuster to get maximum efficiency. Similar designs, made of earthenware, have been developed by the Gobar Gas Research Station of the PRAD in Ajitmal. They are somewhat cheaper but are still of limited use.

The KVIC also designed gas lamps with 40 and 100 candlepower which consume 0.07-0.14 m^3 gas/hr. Lamps of various styles and sizes are manufactured and are available in the market. It has been noticed that bright light can be obtained with a gas pressure of 10 cm water and that excellent light is obtained at 15 cm water or gas pressure.

The Gobar gas can also be used for running engines. For this purpose, the quantity of gas available must be sufficient. On an average 570 liters of gas are required per kilowatt-hour. A water pump or generator can be connected to the engine. If a 3.75 kW engine is to be used for, say, 8 hours, at least 18 m^3 of gas would be required per day. That means at least 30 to 35 animals are required for this purpose only.

The conversion of diesel or gas engines to biogas requires some special attachments. For the petrol engine, a suitable adapter for the introduction of biogas into the engine inlet is needed. One method is to feed the gas into the carburetor and use it to control the gas-to-air ratio. This can be done by attaching a tube of suitable diameter with a gas tap into the carburetor itself. Another method is to bypass the carburetor and modify the air filter inlet by incorporating a butterfly valve to control the gas-to-air ratio. This can be done by attaching a tube of suitable diameter with a gas tap in the intake manifold. This adapter can be easily fitted by means of a collar between the air intake and the air filter.

The engine is first started with gasoline. After a few minutes (a warm-up period), the gasoline is cut off, the gas tap is opened slightly, and the air valve is closed gradually until engine achieves normal running conditions. Unlike the petrol engine, the diesel engine is run with both diesel oil and biogas. The engine is first started with diesel oil and, after warming up, a mixture of 80 percent gas and 20 percent diesel is used for continuous running of the engine. After the initial warming up period, a diesel engine can also be run completely on biogas. The gas is connected to the air intake, and the diesel oil feed is stopped. The injectors are replaced with spark plugs, and an arrangement is made for electricity and timing of the spark.

Other uses of biogas that are under development at the Gobar Gas Research Center, Ajitmal, include room heaters using wire gauze above the flame as a radiating surface, and operation of a small plastic injection molding machine. Table 12 shows gas consumption of various devices.

Table 12. Gas Consumption of Various Devices

Cooking:	325-425 liters/person/day
Lighting:	78 liters/candlepower
Engines:	570 liters/kWh
Electricity:	620 liters/kWh

Manure is used in various ways. The thick liquid slurry as it comes out is quite rich both in nitrogen and humus. It can most profitably be applied to the farm directly by mixing with irrigation water. Under these conditions, maximum benefit is derived from the manure because the nitrogen content of fresh slurry is over 2 percent and it mixes with soil very well.

When the slurry cannot be used with irrigation water, it can be used for rapid fermentation of compost. For this purpose, a series of compost pits are dug near the gas plant. The outlet slurry is led into a channel that connects a number of pits. The vegetable refuse such as grass, leaves, corn, and all kinds of waste materials are dumped into the pit, on the top of which the outlet slurry is allowed to spread. Waste material is then spread on top of the slurry and the process is repeated until the pit is full. The outlet slurry is then led into another pit and the process is repeated. The number of pits will depend upon the local conditions. It has been found that the large content of bacteria in the slurry accelerates the process of composting.

In other locations the slurry may be led into a series of pits one by one. When the first pit is full with the slurry of several days, the next one is filled. By the time the second or third pit is full, the first one is dry enough for digging out the manure. After the manure is removed, the pit becomes available for filling again. In this process, some part of the nitrogen is lost during drying. However, disposal of the manure becomes easy.

Research and Development

The Planning, Research and Action Institute is essentially an action research organization with a multidisciplinary team of specialists who conduct pilot-project experiments and carry out

research on biogas at the Gobar Gas Research Station, Ajitmal (District Etawah). The location of the Gobar Gas Research Station in a rural environment, with which it has intimate links through the extension staff of the famous Pilot Development Project, Ajitmal, District Etawah (one of the precursors of the community development program), makes it particularly suited to conduct action research on the suitability and acceptability of new ideas developed from time to time.

The Gobar Gas Research Station, Ajitmal, has been engaged since 1960 in the development of biogas technology and its utilization. Among the earlier achievements of the Gobar Gas Research Station, it is worth recalling that various plant designs have been tried in actual field conditions with cost reduction being of great concern. An underground, cement concrete plant with a capacity of 6 ft^3 was designed and constructed as early as 1964. It was based on vegetable waste made up of green leaves and other cellulosic material.

Socioeconomics of Biogas Plants

Although biogas technology has been known and applied since 1943, it has not spread over the rural sectors in a way that would reflect this long experience. The number of family units was only 80,000 at the end of 1979. Of the total number of rural families, 13.1 million have agricultural holdings of less than 3 hectares, and they do not have the required number of animals to feed Gobar gas plants. In addition, 26.3 percent are landless and reside in villages. These families play an important role in the rural economy but have no facilities to install an individual Gobar gas plant.

The main reasons behind biogas limitations may be due to the following:

a. The socioeconomic status and conditions of the rural families is that most of them are landless and do not own the animals required for the project.
b. The economic costs of the plant usually exceed the farmer's economic level.
c. The rejection reaction of people (farmers) at the beginning of the project.

Such problems led to practical solutions in order to maximize utilization. These solutions included:

a. Government subsidy to cover the cost of establishing the plants.
b. The reduction of the total cost of the plant by 30 percent.
c. Orientation toward installing community sized plants.
d. A cooperative orientation toward establishing a community-size digester to solve the problem.

The community-size digester is a relatively recent development in that it provides the marginal and landless agricultural families with the benefits of biogas based on organized community participation. This generates the feeling of production and distribution of a utility product among all the village individuals irrespective of their economic condition.

The pilot experiments in the field of biogas (individual and community sized) conducted by the Planning, Research and Action Division has revealed that:

- o Families that use the devices are satisfied with their performance.
- o The expansion of individual biogas units would not be a long-term solution to the problem of alternate energy, as people who actually benefit constitute a very small segment of the rural population.
- o Community biogas plants offer the promise of catering to a large portion of village energy needs. Besides family cooking and lighting needs, the village needs a clean supply of drinking water, devices for cutting and grinding, as well as irrigation and general water supplies. Community plants could go a long way toward meeting these needs.

In India there are many research institutions on the national and state government levels. Also, the extension service system is highly functional, especially in the rural areas. A special ministry for rural affairs, called the Ministry of Rural Reconstruction, along with the Ministry of Agricultural Irrigation, Department of Rural Development, are also involved in biogas research. These institutions, organizations, and ministries are coordinated through a policy of working according to a national plan and strategy of development. The state governments are concerned with execution in terms of the possibilities, facilities, and local sources.

The accumulation of scientific knowledge and results in the different fields of science were usually adopted as a base for plans and programs of the development projects; thus, there is no lag between the scientific level and the application level.

The extension service programs are concerned with this scientific knowledge and its transference to the practical level.

Summary

A great deal of development has been done for biogas. Implementation has been slow for many reasons. Lack of capital and lack of information are probable reasons. The benefits of digestion are becoming known, and more good digesters are being built.

REFERENCES

Bahadur, Shahzad. 1979. Report on Biogas Study Tour to People's Republic of China, State Planning Institute, Uttar Pradish.

Bahadur, Shahzad and K. K. Singh. Janata Biogas Plants, Planning Research and Action Divn., State Planning Institute, Lucknow.

Biswas, T. D. 1977. Biogas Plants; Prospects and Limitations, Indian Agricultural Research Institute, New Delhi.

Biswas, T. D. 1978. Dr. Barodanada Chattergee Memorial Lecture 1978: Biogas Technology and Rural Development, Indian Agricultural Research Institute, New Delhi.

Biswas, T. D . 1979. Cow Dung Gas Plant: Instructions for Installation, Operation and Maintenance, Indian Agriucltural Research Institute, New Delhi.

Biswas, T. D. 1974. Cow Dung Gas Plant for Energy and Manure. Fertilizer News, Vol. 19, No. 9.

Biswas, T. D. 1977. National Symposium on Biogas Technology and Usage (November 29-30, 1977). Indian Agricultural Research Institute, New Delhi.

Bombay Organic Manure Company, Ltd. Compost Plant at Deonar, Bombay. Bombay Organic Manure Company, Ltd., Bombay.

Directorate of Gobar Gas Scheme. Scope of Activities in Biogas Technology and Utilization. Planning Resaerch and Action Division, State Planning Institute Kalakankar House, Lucknow.

Directorate of Bio Gas Scheme. 1979. Gobar Gas: Retrospect and Prospects. Chetan Arts, Bombay.

Directorate of Bio Gas Scheme. 1979. Gobar Gas--Why and How. Chetan Arts, Bombay.

Gaur, A. C., S. P. Magu, R. S. Mathur and K. V. Sadasivam. 1978. All India Coordinated Project on Microbiological Decomposition and Recycling of Farm and City Wastes. Indian Agricultural Research Institute, New Delhi.

Ghate, P. B. Biogas: A Pilot Project to Investigate a Decentralised Energy System. Planning Department, Uttar, Pradesh.

Gujaret Agro Industries Corporation, Ltd. Mechanical Compost Plant--Ahmedabad. Narrangpura, India.

Pethia, Brahm Prakash. 1980. A Techno Feasibility Report on Community Gobar Gas Plant at Village: Khorag. Projects Division, Ahmedabed.

Planning Research and Action Division. Community Bio-gas Plant. Planning Department, Uttar Pradesh.

--------- Janata Biogas Plant Model-1.

Ventakaraman, G. S. 1978. Algal Technology for Rice. Indian Agricultural Research Institute, New Delhi.

Barnett, Andrew, Leo Pyle, and S. K. Subramanian. 1978. Biogas Technology in the Third World: A Multidisciplinary Review, IDRC, Ottawa, Ontario.

Chengdu Institute of Biology and The Chinese Academy of Sciences. Studies of the Biogas Fermentation of Chinese Rural Area. Chengdu Institute of Biology and The Chinese Academy of Sciences.

Chengdu Seminar. 1979. Biogas Technology and Utilization, Sichuan Provincial Office of Bio-gas Development.

F.A.O. 1979. China: Azolla Propagation and Small-scale Bio-gas Technology, Food and Agricultural Organization of the United Nations, Rome, Italy.

F.A.O. 1977. China: Recycling of Organic Wastes in Agriculture, Food and Agricultural Organization of the United Nations, Rome, Italy.

Ke-Zin, Liu and Chen Guang-Qidn. 1979. Studies of the Biogas Fermentation of Chinese Rural Areas, Chengdu Institute of Biology, Chengdu Sithuan, China.

People's Hygiene Publisher. 1978. Compost, Fertilizer, and Biogas Production from Human and Farm Wastes in the Peoples Republic of China, Edited by M.G. McGurry and Jill Stainforth. IDRC, Ottawa, Canada.

Ru-Chen Chen, Huang Cong and Xiao Zhi-Ping. 1978. A Biogas Power Station in Foshan--Energy from Night Soil, Chinese Academy of Sciences.

Ru-Chen, Chen and Xiao Zhi-Ping. 1979. Digester for Developing Countries--Water Pressure Digester, Chinese Academy of Sciences.

Chantavorapap, Sompongse. 1978. Utilization of Biogas Digesters in Thailand. Technical Division, National Energy Administration, Bangkok.

Skulbhram, Pichit. Rural Biogas Digester in Thailand. Dept. of Sanitary Science. Mahidol University, Thailand.

---------- 1978. Status Summary of Biogas R & R in Thailand.

PART II
DIARY REPORT OF DR. M.M. EL-HALWAGI

1. On July 6, 15:00 Hr. I departed Cairo aboard Gulf Airlines GF 078 which stops over in Bahrain, then arrives Dubai on the same day (July 6) at 22:00 Hr. I got a 24-hr. visa at the airport and stayed for the night.

2. On July 7, 22:45 Hr. I departed Dubai aboard BA 147 which arrived in Delhi July 8, 3:20 Hr. I stayed for the rest of night (counted in the hotel as July 7) at ASHOK Hotel, New Delhi. Since the National Biogas Seminar started on 9 July in Luidhiana (about 400 m from Delhi), I tried with the help of the Indian Gov. representative to get any reservation on train or bus (Luidhiana has no airport). The only reservation we could make (after several goings and contacts) was on the 10 p.m. train that was scheduled to arrive in Luidhiana July 9, 8:00 a.m. I accepted to take that train though it was a Janata train (Public Train — something like 3rd class) which is considered a dangerous venture. I stayed in the station until almost midnight, the train did not arrive and it was announced that there would be at least a 7-hr. delay because of the heavy rains in the south of India, from where the train was coming. So I stayed the night of July 8 in Hotel Janpath, New Delhi.

3. The rented car departed Delhi 12:00 Hr; arrived Luidhiana 18:30 p.m. I went to the Punjab Agricultural University where the seminar was being held, and found out that my paper was scheduled as the first one in the session that had just ended. The organizers there asked me to give a special session on the last day to present my paper because all delegates were very keen to hear about the Egyptian program. I stayed for the nights of 9 and 10 July at Hotel Gulmor. Because of my active participation in the discussions of the various sessions, the organizers requested me to chair the final technical session.

4. On July 11, after conclusion of the seminar, I departed Luidhiana with the rented car at 12:00 and arrived Delhi at 18:00. I stayed for the nights of 11, 12, and 13 July at Janpath Hotel.

5. On July 13, 10:30 a. m., I met with the organizer of my program on behalf of the Indian Government, Mr. S.S. Mahdi -- Commissioner of Fertilizers, Ministry of Agriculture, and Coordinater for the Indian National Biogas Plan. We had good discussions on the various aspects of planning and implementation of biogas programs.

   At 14:00 Hr., I had a meeting with Mr. J.B. Singh, Executive Director, Action for Food Production (AFPRO). It is a private enterprise with a strong biogas program (among other activities). They are conducting training and building of digesters. They get financial

donations from some organizations as well as subsidies from the government. They are mostly adopting the fixed-roof type (Janata) digester.

At 16:30 a meeting was held with Professor Rahman and Dr. V.N. Vashist (Director and Assistant Director) CSIR (Centre of the Study of Science Technology Development). They were kind enough to make telex arrangements for my visit to two very important R&D institutes : Central Drug Research Institute at Lucknow, and the National Chemical Laboratory at Pune.

6. On July 14, I departed Delhi aboard IC 489 at 7:40 a.m. and arrived Lucknow, capital of Utter Pradish (U.P.), at 8:35 a.m. After depositing my luggage at the Clarks Avadh Hotel, I visited the State Planning Action and Research Institute which undertakes a strong biogas program and developed the well-known Janata type (fixed-dome) digester. Extensive discussions were held with Shri Shahzad Bahadur, the institute director. The institute belongs to the state of U.P. and is specifically devoted to rural development and related appropriate technological activities. During 1980, 7,300 digesters were constructed in the state of U.P. (1,600 KVIC models and the rest, the Janata drumless model). About seven training courses are conducted each year for supervisors and masons. Each course lasts 21 days, and each mason is trained on site. He should participate in building 3 digesters before being registered as a trained biogas digester mason. The incentive is that he gets 25 Rs/day instead of the normal 15 Rs/day wage. One thousand masons and five hundred supervisors were trained. The total time for building a digester is said to be 15 days (if there is no rain). Government gives about 25% of the cost of the digester as subsidy, and loans are obtained at an interest rate between 8 and 11%. The plan of the state of U.P. is to build 15,000 digesters next year of the Janata type, of which 70 are community size (2 units each of 30 m^3/day gas). Twenty thousand Janata digesters are to be built next year in other parts of India, including 30 community-size units.

At 14:00 Hr., accompanied by an assistant of Mr. Bahadur, Dr. S.C. Agrawal, I visited the CDRI (Central Drug Research Institute), which is a very well organized and active national institute based on the multidisciplinary approach. The director of the institute, Dr. Nittyanand, was outside the country attending a WHO meeting, so I met with his deputy, Dr. B.N. Dhawan. I visited several parts of the institute with particular emphasis on the engineering section involving process development and pilot plants. The institute has a very good documentation service centre and publishes several good abstract publications. The pilot plants include both chemical synthesis and fermentation.

7. On July 15, at 9:00 Hr., a visit was made to the Extension Training Centre, Bakshika Talab, Lucknow. It belongs to the department of community development. The objective of these centers (widely distributed in India) is to provide training of different extension aspects, including biogas. Biogas training for masons and supervisors (as well as officials) is conducted with the aid of books, posters, and actual on-site construction. Each training program lasts 4 weeks. The first is devoted to lectures, and the remaining 3 weeks for practical on-site training.

A visit was then made to a 3 m^3 biogas unit in the training centre. The gas is used for cooking and light for workers. The unit is completely underground. A very nice slurry handling system is used whereby the exit slurry pipe is connected to three pits (12' x 18' by 3' deep) with simple brick guides or closures. It is also connected directly to a sloping irrigation channel where it can mix directly with irrigation water. It takes 16-20 days to fill one pit, and 8-10 tons of semidry manure is produced each year. Feeding is 50-60 kg dung per day. They use the total amount of manure for one hectare of land.

Visits were next made to some family-size units located in neighboring villages. A visit was also made to a site where a unit is being built but construction had stopped due to the heavy prevalent rains.

At 15:00 Hr., a meeting was held with Mr. Shamshad Ahmed, the Agriculture Production Commissioner-State U.P. General discussions were held, but it was mostly a courtesy visit.

At 18:25 I left aboard IC 490 to Delhi; arrived there at 19:20.

8. Thursday, July 16, I left the hotel at 5:00 a.m. to catch the 6:40 flight leaving Delhi to Ahmadabad. Surprisingly, there were no taxis. The drivers were on strike because of the gasoline price raise without any compensation for the taxis. I had to take a private taxi at double the rate.

The plane arrived in Ahmadabad around 8:00. Another surprise was awaiting me there. The ground engineers were on strike and the evening flight to Bombay was cancelled. I had to stay the night in Ahmadabad and cancel my trip to the National Chemical Laboratory at Pune. At Ahmadabad airport, Shri Harshad Shah, Manager of the Gobar Gas Project, Gujarat Agro-Industries Corp. Ltd., was awaiting me. He took me to the hotel and we discussed the visit program. We met later with his General Manager, Shri Upendra C. Oza, and the three of us started a trip to several village sites.

The first visit was to an 8 m^3 gas plant on a poultry farm at Narol. It uses the droppings from around 1,200 chickens (with mixed fodder). This amounts to about 150 kg/day. It is mixed with water in a ratio of 1:2. The digester is 18 ft. deep x 7.5 ft. in diameter. It is a KVIC design with a gas holder 7 ft. diameter x 4 ft. high with 4 cm^3 holding capacity. The gas is used to warm the chicks. Five gas lamps are used in addition to a kitchen burner (costs around $45). The gas lamps are surrounded by a wire cage and have a large top cover. The chicks are confined with fiberboard laid on the top of a metallic pipe structure. The owner of the farm, Dr. Mehta, is not using the slurry which is being dried in a pit (3 ft. deep) and given away free. He is selling feathers to the U.S. where they are made into fishing bait.

The second visit was to a fixed-dome unit of the Janata type producing 4 cm^3 of gas daily in a farm house at Asalali. The unit is completely underground; even the gas pipe is buried, so the space can be utilized. The slurry overflows to a holding tank and is emptied daily by buckets

The third visit was to a community-scale unit at Kubadthal. It was financed by a benefactor to help about 100 poor families in the area. It is 140 m^3 gas per day. The total cost is about 300,000 Rs. It ia a KVIC design. The large gas holder has 2 openings for temperature measurements and 2 openings for gas distribution. The top of the gas holder is used as a solar pond. Hot water from it is circulated through an internal coil adjacent to the digester walls. There is also a gas-bubbling arrangement for stirring the digester contents. Gas is led from the gas holder through a compressor. The compressor water pump (for pumping the required feed water) and hot water circulation pump run on gas. The feeding is done through three concrete, interconnected tanks. In the first, manual mixing is done and stones are removed. In the second, a hand stirrer is used and the lower tank is used for feeding. A simple, manually operated handle gate is used to admit the feed. The slurry is led by gravity to a drying pit. The unit seems mismanaged and social problems appear to exist. Each family is supposed to deliver about 30 kg of dung each day.

The fourth visit was made on the way back to an old farm-type restaurant in which the food is served on boat-shaped plates made from dry banana leaves stapled together with leaf stems. Water is cooled in clay jars. Cooking is done through two kitchens each having 5 large biogas burners. The unit produces 8 m^3 of gas daily. It is fed with purchased cattle dung and kitchen leftovers.

The fifth visit was made to the Gobar gas workshop at Agri-Services Division, Junapura, where they make gas holders and metallic miniplants which produce around 1.2 m^3/day. The whole unit with accessories (2 burners, valve and hosing) costs around Rs 850.

A meeting was finally held with the vice managing director in which the state of development and plans of biogas in the state of Gujarat were discussed.

9. On July 17, I left Ahadabad on the 8:25 Hr. flight to Bombay where it arrived 9:20 Hr. I made a visit to the KVIC after settling in the Holiday Inn at Juhu, which is close to the KVIC offices.

A meeting was held with Mr. H.R. Srinivasan, the director of the Gobar gas scheme at the KVIC, and his assistant Mr. Y.N. Sharma. The KVIC people believe they will bring the cost of the KVIC digester very close to the cost of the fixed-dome digester within three months. They are conducting trials on shallow digesters; fiberglass, Red Mud plastic, and ferrocement gas holders. They still believe that the best gas holdar is the one made of steel; but, it should be copper-bearing steel (1.5% Cu), so there will be no corrosion problems.

A courtesy visit was next made to Mr. A.M. Thomas, the Chairman of the KVIC (Khadi and Village Industries Commission).

In the afternoon, a visit was made to a community-size plant at Dhaniv-District Hana, approximately 100 km from Bombay. The concept in this plant is to use a combination of cattle dung, night soil, and agricultural wastes (shredded to about 1/2 inch). This is to alleviate previous failures in Etawa, New Hyderabad, and other community plants operated exclusively on dung, under which condition the farmers know that the plant will not work without their supply of dung, and hence the price of dung increases. The unit is multistage. The first digester, 45 m^3 gas/day, operates only on cattle dung, with a retention time of 30 days. The gas of this unit can be supplied to families who may resist the use of gas produced from human excreta.

The second stage is a digester of similar size with 30 days' retention time. It is fed with the slurry coming from the first digester, in addition to human excreta coming from 8 latrines built for public use. The third stage is 3 batch digesters that produce 5 m^3 gas/day each and have a retention time of 6 weeks. One will be filled, while the second is in operation, whereas the third will be emptied. All digesters are connected to two gas holders 30 m^3 each. The gas holders on the top of the digesters are used essentially for sealing since they are rather shallow (50 cm high). The third stage

digesters, using agricultural waste, are also rather shallow (only 1-2 m deep). All the gas holders are of the type immersed in an annular channel filled with water to alleviate corrosion because of the low quality of steel being used presently in India. The whole plant is sloping from the latrines down, finally ending at several manure composting pits. The plant also has a converted diesel engine (6 HP) that will operate on 20% diesel and 80% gas. The gas is distributed to 40 houses by a pipeline varying in size from 2 inches at the main to 1/2 inch at the kitchen.

The plant will be run by the KVIC for 3 years to assess its performance and economics. A supervisor, a mechanic, and 2 hired laborers are engaged. The gas will be sold initially at 10 Rs for each house. Dung will be bought at 30 Rs per ton. Otherwise, the family that contributes dung will receive compost. This is calculated on the basis that a contributor of 100 kg of dung (80% moisture) will receive 20 kg of compost (30% moisture).

After that, few individual family units in the area were visited.

10. July 18, discussions continued at the KVIC headquarters.

At 18:35 Hr. I departed aboard Air India to Bangkok. Arrival time was 3:00 Hr., July 19. Then the trip continued aboard Air France to Manila. Departure was 10:30 Hr. and Manila arrival was 14:00 Hr. I stayed in the Golden Dragon Hotel of Bangkok. This was arranged through Air India.

Main conclusions of the Indian trip are:

- There is much controversy among Indian experts on the actual number of biogas plants. The number appears to be in the neighborhood of 8,000. All experts feel bad about this being so low in comparison with China's 7-8 million, since the Indians started long before the Chinese. However, some claim that the number of digesters in China is not increasing at an appreciable rate, and that a high percentage of the existing Chinese plants are not operable and suffer from leaks. Some claim that more than 5 million digesters in China suffered from leaks, and they claim that this is due to the unequal pressure exerted when the digester is emptied every 6 months.

- The Indians have an ambitious plan for the coming 5 years whereby they hope to establish one million units. A more realistic, though seemingly ambitious figure, is 400,000 by the end of year 1985.

- Much emphasis is given to the fixed-dome design because it is cheaper than the KVIC model. However, most experts feel that the KVIC model has merits if the gas holder can be made to stand corrosion and if its cost can be reduced.

- The government in India is pushing for community-size unit demonstrations on a wide scale (in the order of 100-150) in an attempt to help the poor sector of farmers. However, all experts agree with my opinion that community-size plants are liable to social and managerial failure since they do not belong to an owner. Past experience has acertained this in the community plants erected in India.

11. On Monday, July 20, I was received officially by the administrator of the Centre for Non-conventional Energy Development (CNED), Dr. Ernesto N. Terrado, who is incidentally a chemical engineer. The centre belongs to the ministry of energy. It is located next to the Atomic Energy Commission at Don Mariano Marcos Ave., Diliman, Quezon City. Arrangements of my visit to the Philippines were made through them. They arranged for a moderately-priced hotel and provided a car with a driver and accompanying young chemical engineer, Mr. Jesus Tanchuco, Jr.

    The visit itinerary was prepared and typewritten. I met with most of the senior staff of the centre and toured their facilities. It is a new centre officially inaugurated less than a year ago. They have a biogas demonstration plant connected to a hog shed, supplying fertilizer for medicinal plants cultivation. The gas is utilized in burners, irons, refrigeration, and lamps. They also have a windmill of a standard design produced by a company in the Philippines for pumping, a solar passi house, solar dryers, a rice husks (briquetted) gasification unit, and production of alcohol from biomass.

    In the afternoon, a visit was made to the Bureau of Animal Industry, Alabang, Muntinlupa, Metro Manila. A tour was made through their demonstration integrated biogas system. It is called "Cow Manure Bio-Gas Production and Utilization in an Integrated Farm System at the Alabang Dairy Project." It is established on a 300 square mile area. It consists of a 50-milking-cow shed with chlorella culture on its roof, two 14.5 m^3 digesters of the rectangular type, a fish pond (1 m deep), and a vegetable garden. A full paper describing the system was procured and photographs were taken. The slurry is also dried on the top of the digester and fed to animals (10% supplement).

12. On Tuesday, July 21, a visit was made to a village about 40 km from Manila where the Baranggay Teknolohiya centre is located (BATEK). The integrated demonstration biogas system there supplies gas to three family huts. The system, however, does not seem to be well maintained. It has a one hectare area for food production employing the integrated farming system. It has 3 low cost houses (huts) made of indigenous materials; a piggery equipped with chlorella pond (that is not operating); interconnected digesters made of cement rings, cemented together with overhead movable gas holders that are sealed

in water channels built of hollow concrete bricks (red bricks are not available in the Philippines); a windmill of the standard Philippine design (not operating) to generate water supply and to be used for recycling chlorella waste for the aquaculture; and a fish pond, where the charging and handling is exclusively manual. They also have (nonworking) solar driers and solar water heaters. The system was built by the Naval Research and Development Centre.

In the afternoon, a visit was made to the Naval Research and Development Centre, Fort San Felipe, Cavite City, which is about 50 km from Manila. I was officially received by Captain Dayan since Commodore Alfredo C. Protacio was out of the country. They are providing community services and have a strong renewable energy program of biogas, solar, gasification, wave energy, and geothermal energy. They have developed a variety of gas use devices: burners, iron, refrigerator, gas lamp and heater (used for light and cooking simultaneously), chick-warming lamps, and biogas dryers. They have two family-size interconnected rectangular biogas digesters fed on a pig-raising operation.

13. On Wednesday, July 22, a visit was made to the R&D centre of the Central Luzon State Universty located about 200 km from Manila. There they have two digesters: one is 3.4 m^3 digester of the Indian type and the other is a 15 m^3 digester of the Chinese type, which was built under the supervision of Chinese technicians.

The Chinese digester is more than one meter above ground level (the water table is around 2 m), and the uppermost layer of backfill is covered with a concrete layer because of the rainy weather. Both units are exclusively run on poultry droppings. The Chinese digester is operated at 20 days' retention time. Daily, 200 kg of poultry droppings are mixed with 400 liters of water. The digester has a manual mixer. It is cleaned every 6 months. The Indian type has a 30-day retention period. Performance tests are very sketchy. The pressure, the gas temperature, and pH were the only measurements made. The Chinese digester cost around $2,000 (excluding the cost of Chinese experts). It started operation December 1980. I was received there by Dr. Jose C. Alonzo, the assistant director.

14. On Thursday, July 23, a visit was made to Maya Farms, Angono, Rizal, the Agro-Industrial Division of Liberty Flour Mills. It is about 40 km from Manila. I was received there by the president and an acquaintance of mine whom I met at the Atlanta Bioenergy 80, Dr. Felix Maramba. I also met with his senior staff. They form an integrated multidisciplinary team.

The Agro-Industrial complex, i.e., Maya Farms is 36 hectares of land. It is an integrated crop-livestock-fish-meat processing-canning system. It has a population of about 26,000 pigs, 70 cows, and 10,000 ducks. At present, biogas generated on site is

about 2,000 m^3 per day (plus 4 tons of feed material and liquid slurry for fish, and fertilizer for corn and rice). This provides 100% of the energy requirements of the farm and 65% of the requirements of meat-processing and canning plant. The plan for the next 2 years is to add 30,000 more pigs, 60,000 more ducks, and 500 goats. The farm, with its meat-processing plant, will be 100% energy self-sufficient. Cars on the farm are run by producer gas(with a charcoal generator attached to the car) and alcohol to be produced by fermentation of biomass.

They have tried, since 1972, various designs of digesters including Indian, Chinese, Taiwanese, European, and African (batch). They introduced modifications through actual experience, research, and development work in the farm.

The gas is presently collected in six large gas holders through a high-density polyethylene buried pipeline (2-2.5 inches).

In essence, the biogas system starts with primarily pig and some cattle manure. Biogas is used for the farm kitchen (stoves, water heaters, refrigerator), ironing, electrical generation, pumping, compressor, and the meat-processing and by-products rendering plant (blood, bones, etc.) as well as the feed mill. Utmost conservation is applied in energy and water use. The exhaust flue gases from burners in the rendering plant, together with engines (gasoline modified engines), are used for drying rendered products in a drying room with a chimney for natural convection). Hot water from the engine cooling cycle is used for cleaning or is air cooled and recirculated. The gas is scrubbed of H_2S by iron filings before being used in engines. The digester's slurry is first pumped to settling basins in front of the piggeries (to be close for feeding). These are shallow, slanting (narrower at the filtration end) basins, at the end of which grass clippings are used as filter media. Liquid slurry is decanted through the filter media in 3 days' time. The thickened sludge is added to the feed of pigs, cows and ducks (about 10% of diet) after sun-drying for another 3 days. The liquid slurry is aerated through a system of lagoons (principally to eliminate the toxicity effect of H_2S to fish and crops as well as to reduce the BOD). The aerated liquid slurry is used as fertilizer for rice and maize (no chemical fertilizer is added) and for fish feed. For the fish pond, one liter of liquid slurry is added per cubic meter of pond water every two weeks. It may be noted that in the case of rice and maize, the continuous cropping system applies. Thus, liquid slurry can be used and distributed to various plots of land in turn. They harvest about 3 kg of fish from a 200 m^2. pond every week. The fish variety used is Tilapia, which is the popular variety in the Nile known locally in Egypt as Bolti.

It may be noted that ducks swim in the fish pond for aeration and also eat any scum formation. Algae grows in the pond and constitutes

the main fish feed. One month before the slaughter of ducks, they are isolated and fed exclusively on rice bran and maize. In this way, their meat does not smell.

It was noted that the solid (or semidried) sludge to animal feed has a beneficial effect because of the presence of vitamin B_{12}. In Maya Farm they are now conducting research to extract this vitamin.

On this visit I procured several very important and absolutely beneficial publications:

1- A valuable book, "Biogas and Waste Recycling - the Philippine Experience," by Felix D. Maramba, Sr. et al. (Printed by Regal Printing Co. 1978).

2- A paper titled "Biogas and Waste Recycling at Maya Farms."

3- A report titled "On the Maya Farming System in a 1.2 hectare pilot project -- its first year of operation," which explains a self-sufficient integrated system for small Filipino farmers.

4- A paper titled "Biogas Works at Maya Farms: Its Socio-economic Aspects."

5- A pamphlet titled "Maya Farms -- Bio-energy consultants."

In conclusion, the Maya Farm is a magnificent integrated system, a well-managed and scientifically backed-up operation. It is a successful free-enterprise model that is worthy of duplication.

15. On Friday, July 24, a meeting was held at the Centre of Non-Conventional Energy Development (CNED). Dr. Jose A. Eusebio, former professor, College of Agriculture, University of Philippines, Los Banos, Laguna, came particularly to make a slide presentation on the Integrated Farming Concept which was first proposed by him in the early seventies. From 1974 to 1977 he had a very active research and demonstration program on the system producing biogas, fertilizer, algae, and fish. This same system has been duplicated by order of President Marcos by the Bureau of Animal Industry in 12 regions. This is the same system described before in my July 20 visit to the Bureau of Animal Industry, Alabang, Metro Manila. Dr. Eusebio did not know this and was gratified when I informed him. He is currently the president of a private enterprise, "International Agribusiness Corporation" (INTERACS), 2nd floor, Zaragosa Building, Gambora Street, Legaspi Village Makati, Metro Manila. He has a project for a tree plantation in Libya and a letter of intent from the Governor of Alexandria for a garbage compost plant.

Conclusions regarding my Philippines visit

Several government entities are promoting biogas development. Coordination seems to be lacking. It is said that there are only about 500 digesters in Philippines, though they started about 10 years ago. No standard design was adopted. However, most digesters are shallow, either single chamber with square cross section or double character with rectangular cross section. The commonly used raw material is pig manure.

The Filipinos are pioneers in the area of the integrated farming (or integrated biogas) system. The system appears readily applicable to their local conditions. The feasibility of such a system in other countries like Egypt has to be carefully examined. The Maya Farm system is indeed a model that is technically and economically feasible.

16. On Saturday, July 25, I departed Manila at 14:40 and arrived Peking through Canton at 20:30. I was received officially inside the airport by Mme. Tian Yao, Head of the Asian-African Department for foreign relations accompanied by two other persons; one speaking English and the other Arabic. I stayed at Friendship Hotel of Peking.

17. On Sunday, July 26, we started early morning discussions at 8 o'clock though this was their official holiday. My companion, Mr. Xu Zhi Hong, was a senior chemical engineer at the chemical metallurgy (P.O. Box 353, Peking). It belongs to the Academy and conducts chemical engineering work in the field of metallurgical industries. My first visit on Monday, July 27, was to this institute. Accompanied by Mr. Xu and an Arabic interpreter from Department of Foreign Affairs, Zheng Shu Zhi, we visited the Great Wall (about 2 hours drive from Peking), and the Ming Tomb on the way back. From discussions with Mr. Xu during the drive, I understood that China is making a big effort now to repair the damages of the Cultural Revolution and to drive for progress and development. Government control is easing slightly, and they are making intensive efforts to repair the academic institutions. I also understood that the biogas program has stood still for some years now. The number of units has not increased to any appreciable extent. It was said that the main reason for this was that many units leaked due to bad operation. The technology is now being modified. This now confirms what I had been hearing in India — that out of the 7 million units in China, 4 million are inoperable due to leaks.

18. On Monday, July 27, I started the first visit to the Chemical Metallurgy Institute at 9 o'clock in the morning. I was received there by Prof. Xu who introduced me to the Deputy Director Professor, Dr. Chia-Yung Chen, who briefed me about the institute and its activities. The Director, who was out of the city on other

important business, called by telephone and apologized for not receiving me in person, saying but he would meet me at the dinner held by the Deputy President of Academia Sinica in my honor. Guided by Prof. Xu, I was taken for a tour of the institute. Research activities centered around fundamental chemical engineering, particularly in the fields of fluidization, chemical reaction engineering, and internal flow patterns of multiphase reactors. They also have 3 computers (all made in China). Hundreds of programs are made by them for simulation, optimization and feasibility studies. After that, I was shown their pilot plant facilities which concentrate on fluidized beds and multiphase systems.

At 1:30 in the afternoon, I visited a village about 2 hrs. drive from Peking; the village name is Su Zhuang. I was received there by the village leader (the commune leader) and the biogas manager in a large meeting room where Chinese tea was served. After a one-hour description -- which I missed mostly because of my Arabic interpreter's weak Arabic — we visited the village and the biogas facilities. Apparently, the village is a newly planned model village. All houses are the same. They are spacious, very clean, and well furnished. There are 132 families; all have 12 m^3 biogas units (each producing around 2.5 m^3 of gas per day during summer). Some units have gas meters (one of which is very small in size and which I shall try to buy) and a book hanging on the wall for recording the gas readings. Each family also has a wood or straw cooker connected to the room under a very large bed (taking half the room) and connected finally to a chimney. Each family owns 2 pigs. The biogas units are apparently relying on the initial batch charge. Each unit is directly connected to a dry latrine and the piggery. I found that some units are not operating (they said 5%, but it should be much higher since every time I asked to see one that I suspected not-operable, I was either told that there was a sick old lady inside or the house was closed). During winter, the gas is not enough and they resort to fuelwood. I saw lots of fuelwood in front of each house, by the side of the biogas unit. The village also has a community-size unit (100 m^3) and is said to be producing 40 m^3 of gas per day. It is charged with the animal wastes from the village piggery and cattle farm (13 milking cows). The purpose is to generate electricity. Solar heaters are put on the roof of the engine room to heat the feed water. Also there are two pumps at the outlet; one for circulating the digester contents and the other for effluent pumping. The engine room was closed with a lock, and I could not see it. Apparently, the unit has some type of malfunction.

At 7:30 p.m., a dinner was held in my honor by the Deputy Secretary General of the Academy at the International Club.

19. On Tuesday, July 28, I tried in the morning to buy the mini-gas meter I saw the day before in the village. The interpreter looked for the

place for 2 hours, and after some time I was informed that it was not available in this place, but they would try to procure it for me. For the first time, I realized that there were two kinds of Chinese currency; one for the foreigners in exchange for hard currency and the other for the Chinese people. Also, in every city, foreigners are entitled to buy from large, good-quality stores called Friendship stores. (I got the meter as a present later.)

In the afternoon, 15:00 Hr., I left Peking for Canton aboard China Airlines Flight No. 1301. The ticket was also bought for me by the Academy according to the agreement between China and Egypt. I arrived in Canton at 17:35 and was met at the airport by three persons, and was taken to Tung Fang Hotel. After dinner, from 8-10 p.m., a meeting was held at the hotel with Chen Ru-Chen, head of biomass division Guangzhou (Canton) Institute of Energy Conversion; Li Ilian-guo, Head of Information Division; and Xu Bing-Yan, Vice Head, Biomass Division. This meeting was held to maximize utilization of my rather short visiting time. A typewritten program was given to me covering my stay in Canton over the period from 28-30 July. I was briefed about the institute and its activities. It is one of 114 institutes belonging to the Academy. The institute has five divisions: Biomass, Solar, Geothermal, Ocean, and Information. The biomass division has 34 people and handles two main lines: Biogas and Thermochemical Conversion (gasification in particular). Their activities in biogas started in 1972, oriented toward rural areas.

In 1978, they started tackling the problems of industrial wastewater treatment. Presently, they have four major projects: Anaerobic Filter (for industrial wastewater treatment), Fermentation Stimulants, New Energy Village, and Biogas Engine.

A general discussion followed from which I gathered that there was not much increase in the number of biogas units because they were re-evaluating and trying for improvements. They favor the floating gas-holder Indian type, but it is expensive. After several trials of different materials for gas holders, they finally arrived at making a simple and inexpensive concrete gas holder. A form of clay is made and covered with paper over which concrete in a thin layer is formed. After 10 days it is cured and easily lifted. It is then very well plastered from the inside using the Chinese thin plaster coat technique.

20. On Wednesday, July 29, 7:30 a.m., we started visits to biogas sites. The first was to the "New Energy Village" at Xinbu Brigade of Shunde County. After a 3 hour drive and crossing two rivers with ferry boats, we arrived at 10:30 a.m. We were met there at the biogas centre by brigade representatives.

They described their efforts from 1973 to 1978 whereby a total number of 243 digesters, including a communal one, were built. The total population is 1,500, made up of 290 families (there seems to be more than one family each, since, in the past two years the government does not allow more than one child per family). The village uses an integrated system. The community produces sugarcane, silk, fish, pigs, and bananas. The fish production increased after biogas introduction by more than 60% (the digester's slurry is used for fish feed). The village is surrounded by fish ponds (about 18 hectares). Each house overlooks a fish pond, and therefore the ground water table is very high (less than 50 cm from ground level). Family digesters use pig manure, human excreta, and weeds. But the biogas is not sufficient as it only covers about 50% of the household requirements. Bananas, elephant grass, and mulberry are grown by the fish ponds' sides. The digester's sludge is half emptied by pumping every three months, and the remaining concentrated sludge is diluted with water. Gas production can be restarted in 2 days. The sludge of the digesters is used to produce mushrooms. The fish pond's water is pumped every year, cleaned, and the pond sludge is used for fertilization. Pond's depth is around 2.5 meters. Slurry is pumped into boats and transported to the fields far from the digesters. Fish production is about 300 kg/660 m^2 pond/year. Four species of fish are produced at different layers in the fish pond. The dace (Cirrhina molitorella) at the lowest layer is fed on bottom sludge; the grass carp (Ctenopharyngodm idellus) in the middle layer consume water plants, grass, and sugercane leaves; the silver carp of the middle layers and the bighead (Aristichys nobilis) of the upper and middle layers feed on plankton and algae.

The digesters are 6 m^3 for family size and spherical in shape. The digester proper is made of concrete (reinforcement is only needed for sizes above 15 m^3) above ground then is lowered into the pit. The dome is built in the conventional way with bricks. Underground water is pumped out of the pit when the concrete part is put in place. Seven digesters are connected together, having a total volume of 235 m^3 as a communal unit with 2 ballons, 45 m^3 each for gas storage. A biogas engine-generator (originally a gasoline engine, but modified to work completely on biogas) generates electricity. The community unit is fed from the brigade piggery and weeds.

In the biogas centre itself, experiments are conducted on bench scale and pilot size. They make a simple burner (I procured a sample) for less than 0.7 U.S. dollars. They are also experimenting with the concrete gas-holder (where centre of gravity is kept at the lower part for stability). Then we visited the communal unit. It used exhaust engine gas in drying the silk cocoons. Also a solar dryer is being installed. Then we saw several family-size units, all of which seemed to be working. I inquired about leakages, and they said very few occur (less than 10%) and are repaired directly by the technician team. These are usually minor leaks since they believe that the spherical digester is very strong and reliable.

On our way back we made a short stop at an ancient temple.

21. On Tuesday, July 30, I started a visit to the biomass section of Guangzhou Institute of Energy Conversion at 8:00 a.m. I saw the anaerobic, partially filled filter to treat dilute soluble organic wastewater. It has 2 thin layers of gravel, one at the bottom and the other at the middle of the column (rectangular). The wastewater is pumped upward for a residence time of about 20 hours. The total filter volume is 31 liters. COD removal is about 84% gas (61% methane), and is produced at a rate of 542 cc/g COD/1-day which is about 4 volumes per volume of filter. Temperature is kept constant at 28°C by a simple incubator with light bulbs controlled by a contact thermometer. We next visited the digestibility laboratory where different wastes are tested. Then we visited the stimulated fermentation group where they increase the rate of gas production by adding 1% (dry weight basis) of humic acid or sodium humate extracted from coal or other minerals with dilute sodium hydroxide (I brought small samples for test). The gas is said to increase up to 100%. The substrate used is usually small pieces of filter paper (as pure cellulose). Finally, I visited the biomass gasification laboratory. where a small varying-diameter fluidized bed is used. A hand-operated screw feeder is used at the bottom to have a continuous system. An electric resistance inside the bed is used for initial combustion. Limited air is used for partial oxidation. I should note also the simple system they use for laboratory digesters — small glass bottles with a top screw cover having a central rubber portion. The gas accumulates and increases the pressure. Every day these bottles are taken, a syringe is injected in the rubber portion of the cover until the pressure equalizes, then the gas volume is read.

I was asked to make a presentation about the National Research Centre, the biogas project, and my impressions about the Indian and Philippines visits. More than 30 persons attended from the institute in Sichuan Province. Translation was made through the head of the information department who speaks fluent English, and it took 3 hours in full with another hour for discussions. I left Canton on Friday July 31, 8:30, and arrived Peking, 11:00.

On Friday, July 31, I departed Peking 14:40 Hr., arrived Cairo (through Karachi) August 1, 5:30 a.m.

Thanks are extended to the Chinese Academy of Sciences (Academia Sinica) for inviting me as a part of the joint Chinese-Egyptian agreement and for providing hotel accommodations, air tickets between Peking-Canton-Peking (around $300), and a full-time, air-conditioned government car (all cars are owned by the government).
Unfortunately, I could not visit Sichaun Province where the largest concentration of biogas digesters exists.