PN-AAY-956

Rural Off-Farm Employment
Assessment Project

Conference Paper No.33

The Fruit & Vegetable Processors of Northern Thailand - Focus On Traditional Pickling & Preserving Firms

by

Merle Menegay
Nittaya Mongtada

With the Assistance of
Ajan Chirawan Chaisuwan
of
Chiang Mai University

June, 1981

Center for Applied Economics Research
Kasetsart University

With the Assistance of
Michigan State University
Ohio State University

Introduction - Current and Pot ial Role of Fruits and Vegetables in T land

The classification of "Fruits and Vegetables" is far broader and more comprehensive than most people imagine. In Thailand the importance of and magnitude of such a set of crops often appears completely underestimated and consequently is given very little attention except by those persons commercially or academically working with them. Thus, before concentrating on the upcountry fruit and vegetable pickling firms at the micro level the big picture (macro level) will be briefly presented by answering a few questions.

"How does the value added originating from fruits and vegetables compare to other crops?" The estimated value added by fruits and vegetables, including garlic, onion, shallot, and chili, was estimated at about ฿28 billion in 1979 at current prices. Stated in another way, fruits and vegetables contributed about 26 percent of the gross domestic product originating from crops (Table 1).

"What is the current situation of Thailand's fruit and vegetable commodities in relation to other countries?" In 1979 the total exports of fruits and vegetables amounted to over ฿ 2 billion whereas only about ฿ 126 million was spent on imports of that nature.[1/] The export value of the most prominent fruit in the form of canned pineapple was about ฿ 1,243,471,600 in 1979.[1/]

1/ Foreign Trade Statistics of Thailand by Department of Customs, Bangkok, 1980

Table 1 Gross Domestic Product Originating From Crops
At Current Market Prices

Crops	Year (Millions of baht) 1975	1976	1977	1978	1979[e]
Paddy	28,312	25,650	30,166	37,666	40,635
Rubber	2,282	3,684	4,380	5,554	7,177
Coconut	463	443	448	712	837
Sugarcane	5,144	7,062	4,449	5,072	4,257
Maize and sorghum	5,981	4,812	2,310	4,571	6,585
Groundnut	1,169	1,376	1,344	1,563	1,992
Mung bean	820	1,053	1,034	1,155	1,206
Castor bean	120	111	90	106	101
Soy bean	999	1,266	1,084	1,626	1,724
Cassava	2,765	4,725	5,362	8,033	8,864
Tobacco	3,844	3,182	3,201	4,092	4,336
Cotton	261	299	664	669	603
Kenaf, jute and ramie	722	662	997	1,072	857
Kapok	231	281	310	364	407
Sesame	181	143	282	250	232
Garlic, onion, shallot and chilli	5,518	7,480	5,635	6,666	5,957
Vegetables	2,079	3,158	3,510	4,718	5,538
Fruits	8,374	11,673	13,300	14,748	16,955
(Fruits & Vegetables, including garlic, etc.)	(15,971)	(22,311)	(22,445)	(26,132)	(28,450)
Other crops	381	449	503	705	819
Total value added	69,666	77,509	79,063	99,342	109,082
Percentage Contribution of Fruits and Vegetables	23%	29%	28%	26%	26%

e = estimated

Source: National Income of Thailand, 1979 Edition, Office of The National Economic and Social Development Board.

"What are the dimensions of those crops at the farm level?" It is very difficult to answer this question due to the limited information due to the limited information available The statistics from the Agricultural Extension Department for the 1978/79 crop year were 940,512 rai and 749,895,000 kg. of production from only 9 important vegetables. This same source has estimated over 6 million rai producing over 6 billion kg of fruits in 1979, which gives only a vague impression of the magnitude of this dimension. Also besides commercial production in every changwat, it is recognized that many of Thailand's millions of farmers have fruit bearing trees in their household plots and plant small areas in vegetables for home consumption.

"Are fruits and vegetables an integral part of the diet or only an occasional delicacy?" From the consumption perspective the report by Supanee Milindankura and Melvin Wagner, "The Demand for Thai Agricultural Products: A Nutritional Approach" illustrates the role of fruits and vegetables in the Thai diet. Their study used the 1962 Household Expenditure Survey to examine the hypothesis that,"... Thai people do already consume enough, and perhaps more than enough food to meet their total calorie requirements,...". Table 2, adapted from that study provides insights into the relative importance of fruits and vegetables in the diet, in terms of quantities consumed. There are clear regional differences in consumption with areas of higher production naturally consuming a larger proportion. Besides the quantity consumed, the expenditures on various food groups indicates

Table 2. Estimated Per Capita Food Consumption by Region and Major Food Groups, as Computed from the 1962 Household Expenditure Survey

Item	North	Northeast	Central	East	South
	kgs/person consumed per year				
Rice & other Cereals	182.2	185.2	159.7	159.2	155.1
Meat	13.2	8.1	11.0	10.7	10.6
Milk & Eggs	1)	1)	0.1	0.1	1)
Fish	3.9	8.8	11.3	17.4	9.1
Fats & Oils	0.8	0.2	1.7	0.9	1.5
Fruit	9.9	15.4	14.8	13.1	23.5
Vegetables	18.7	17.2	22.2	23.9	12.8
Sugar	1.3	0.7	9.2	5.0	3.8
Salt & Spices	3.2	3.4	1.8	2.5	5.5
Total	233.3	239.0	231.8	232.8	221.9
Total Rice	182.2	185.2	159.7	159.2	155.1
Total Fruit & Veg.	28.6	32.6	37.0	37.0	36.3

1) Less than 0.05 Kg.

Source: The Demand for Thai Agricultural Products: A Nutritional Approach by Supanee Milindankura and Melvin Wagner, Kasetsart Economic Report No. 30,1969.

their relative value. From Table 3 the changes over the time and the proportion of food consumption expenditures by groups can be seen. In 1978 the expenditures on food from highest to lower were rice and cereals, meat, fruit and vegetables, and fish.

"What efforts are being made to use this valuable set of crops?" At the regional level the ASEAN countries have formed a Technical Working Group on Food Products under the ASEAN Cooperative Export Promotion Project [2/] within which Thailand and Malaysia are emphasizing the promotion of fresh tropical fruits and vegetables for the European market. At the national level the preparation for the next National Plan included for the first time two studies directly pertaining to fruits and vegetable crops, thus indicating a recognition of the current and potential importance of this set of crops. And at the university and research level the establishment of the "Vegetable Working Committee" in the early 1970's and a recent committee on fruits are positive steps in facilitating the coordination of and information flow from research on these crops and commodities. The activities mentioned above and others in the commercial sector are signs that more of the potential of this valuable sector will be realized in the near future. Now for the assessment of one component of this vast fruit and vegetable subsector - the fruittand vegetable pickers in northern Thailand.

2/ "Report of The First Meeting of the Technical Working Group on Food Products under the Asean Co-operative Export Promotion Project" Bangkok, 1980.

Table 3. Private Food Consumption Expenditure

Item	1970	1971	1972	1973	1974	1975	1976	1977	1978*
Rice and Cereals	13,681	12,594	13,868	21,007	27,747	28,914	28,731	29,693	36,106
Meat	7,752	7,582	8,234	9,456	13,603	14,669	16,105	18,492	21,926
Fish	5,075	5,514	5,155	7,388	10,264	11,345	13,452	15,740	18,211
Milk, Cheese and Eggs	2,354	2,435	3,073	4,386	6,202	5,072	6,685	7,202	8,268
Oils and Fats	839	931	1,056	1,415	2,307	2,332	2,343	3,053	3,610
Sugar, Preserves and Confectionery	828	1,123	1,320	1,525	2,109	2,492	2,892	3,148	3,538
Fruit, and Vegetables	7,979	8,670	9,817	11,714	13,148	14,705	16,964	17,158	18,550
Coffee, Tea, Cocoa, etc.	474	493	539	636	879	941	963	1,050	1,145
Other Food	3,891	4,448	5,317	6,272	7,304	11,014	12,967	15,192	17,562

Source : Office of The National Economic Development Board Office The Prime Minister, National Income Of Thailand, 1978 Edition.

Note: * Estimate.

Products

Pickled products can add spice to meals and snacks. The blending of sugar and vinegar with a wide variety of fruits and vegetables gives a crisp, firm texture, and pungent, sweet-sour flavor.[3/] Originally the pickling process probably evolved from the effort to preserve various fruits and vegetables which were in abundant supply for short periods then not available during the rest of the year. Later pickled products earned their own distinctive place in the diets of several peoples, such that today the process of extending the shelf life of seasonally surplus agricultural products by a pickling or preserving process can be observed in most countries of the world.

In Thailand there are two distinctive, yet overlapping types of pickled products; 1) "food pickles", i.e. the pickled garlic, chinese mustard, and bamboo shoots which are a part of or accessory to several food dishes, and 2) "snack pickles", i.e. mostly fruit products, especially from mango and peach, yet also including olive, sandoria, star gooseberry, tammarind, ginger, tomato, palm, jujube, and many other fruits.

The "food pickles" of chinese mustard (salty and sour forms) and bamboo shoots seem to be sold in the morning food markets of most urban areas of Thailand since the raw material is locally grown or accessible almost every month for the small household picklers to process

3/ Making Pickles and Relishes at Home, USDA, Home and Garden Bulletin No.92,1970.

and bring to their morning market stand. Fresh garlic for pickling is mostly a one season crop with large scale production confined to the northern and some parts of the eastern regions of Thailand, thus clay jars with 12 kgs of the final processed produce are distributed to retailers around the country from the major supply area and demand area picklers. Thus in the morning markets the consumers of pickled food products will normally indicate the quantity wanted and the retailer will take the pickled product from the solution in a large basin or clay jar, put it in a plastic bag, weigh it, and sell the desired product to the consumer. The major exception to this selling and buying pattern is the bottled pickled garlic and canned pickled chinese mustard. The former sold in tourist areas of the North, at eating and fueling areas along the major highways to the North, and in large food or department stores in the Bangkok area. The canned chinese mustard is available throughout the country wherever a large variety of canned products is sold.

The "snack pickles" are quite different in nature. They are processed into many forms by widely dispersed factories. The form of the final product is a major factor for classification. Stores and market stands in tourist areas and large food stores elsewhere sell 1)small to large bottles or plastic boxes of mostly mango and peach in salty or sweet solutions, 2) smaller quantity containers of palm, lemon, star gooseberries, etc., and 3) a wide variety of other snack products, including sweet and sour pickles sold on a quantity basis from large glass

display bowls. Street vendors and refreshment stands at movie theaters selling a wide variety of sweet-sour pickled or sweetened fruits in dry and wet forms can be found in all cities of Thailand.

Pickling Factories

In Thailand there are major supply areas, i.e. locations with surplus production of fruits and vegetables which can be pickled, and demand areas, i.e. urban locations, for pickled products. In general most of the pickling firms and households processing the surplus production of seasonal fruits and vegetables are in the supply areas. Exceptions include large demand areas and urban areas near the supply areas or between large supply and demand areas. Bangkok and neighboring provinces are examples of the former situation and Nakhon Sawan is one of the several cases of the latter situation. From the listing of registered factories at the Ministry of Industries one can discern the tip of the iceberg from a locational perspective (Map 1). Since small firms seldom register we estimate at least 3 out of 4 pickling firms are not listed, however, according to the volume produced the registered factories may account for as much as 60-75% of the pickled products depending on the type of product. The operator of one large, highly reputed pickling factory estimated that Thailand has over a thousand garlic picklers, mostly household firms.

The research base for this industry study is formed on the indepth knowledge of firms found within the research areas of the ROFEAP and

Map 1: Distribution of Registered Pickling Factories.

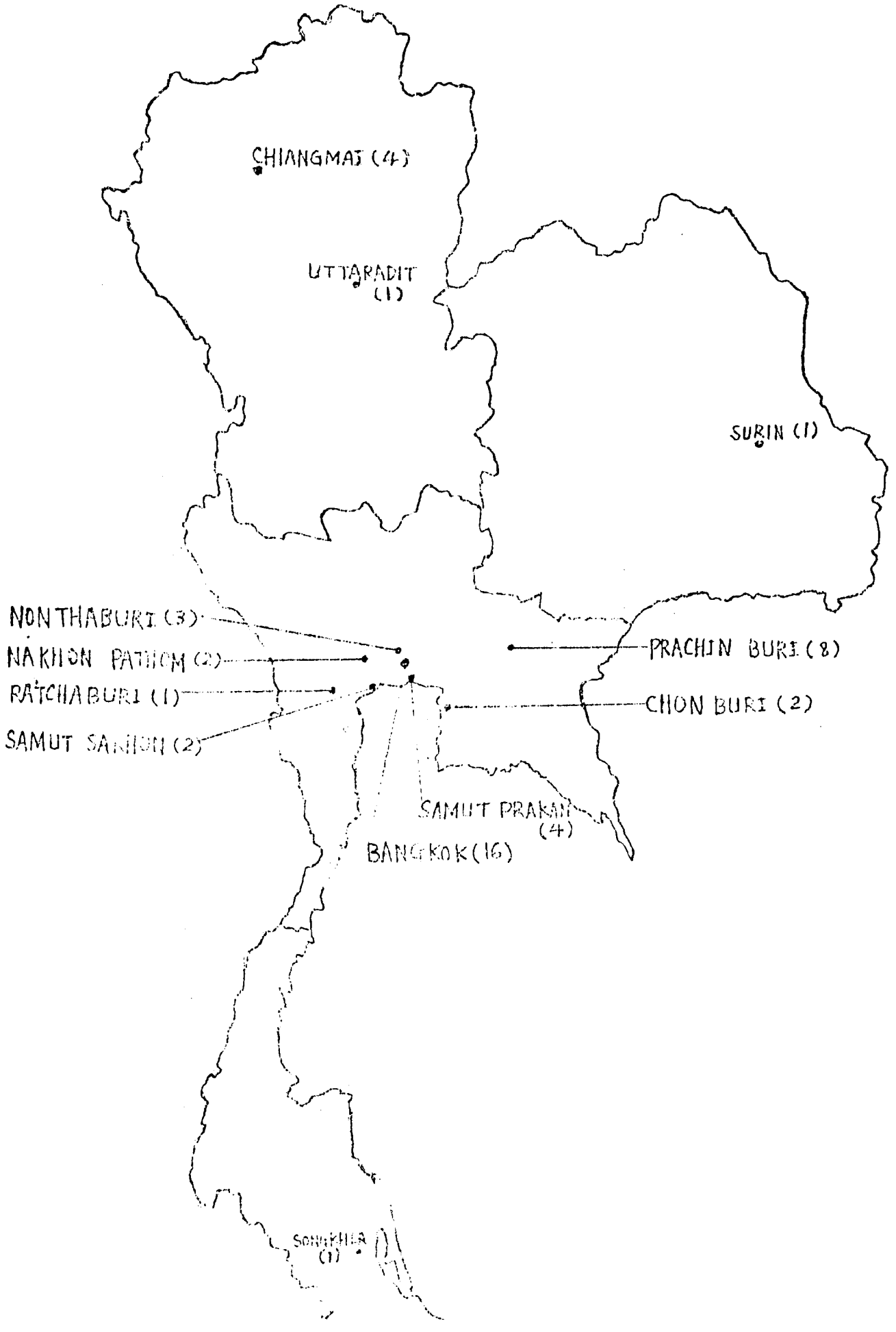

subsequently broadened with additional samples outside those areas. Among the ROFEAP's town research areas in Chiang Mai, Khon Kaen, Roi-Et, and Suphan Buri Provinces, only Chiang Mai Muang was found to have sufficient pickling firms. The pickling firms in other areas were too few and small to be included in this study. Also the presence of modern fruit and vegetable canneries in the northern region and their potential intercelationship with traditional picklers in terms of processed products, organization of input procurement, and comparability of problems with raw materials, reinforced the decision to select this rather than other types of food processing industries in our survey locations. Initially 9 pickling factories were found and 8 selected for participation in the longitudinal survey. With further understanding of the industry an additional 7-8 firms were identified and most interviewed with one-shot questionnaires. The distribution of our sample among all firms located can be explained from chart 1.

Before explaining the distribution of our sample by type of firm, the classification process must be understood from its original analytical basis, i.e. subsector analysis. For an understanding of subsector analysis in agriculture I will view it as "... an interdependent array of organizations, resources, laws, and institutions involved in producing, processing, and distributing an agricultural commodity.[4/]

4/ "The Egg Subsector of U.S. Agriculture: A Review of Organization and Performance," 1978, NC 117 Monograph.

Chart 1 The Chiang Mai Valley Pickled Garlic Subsector

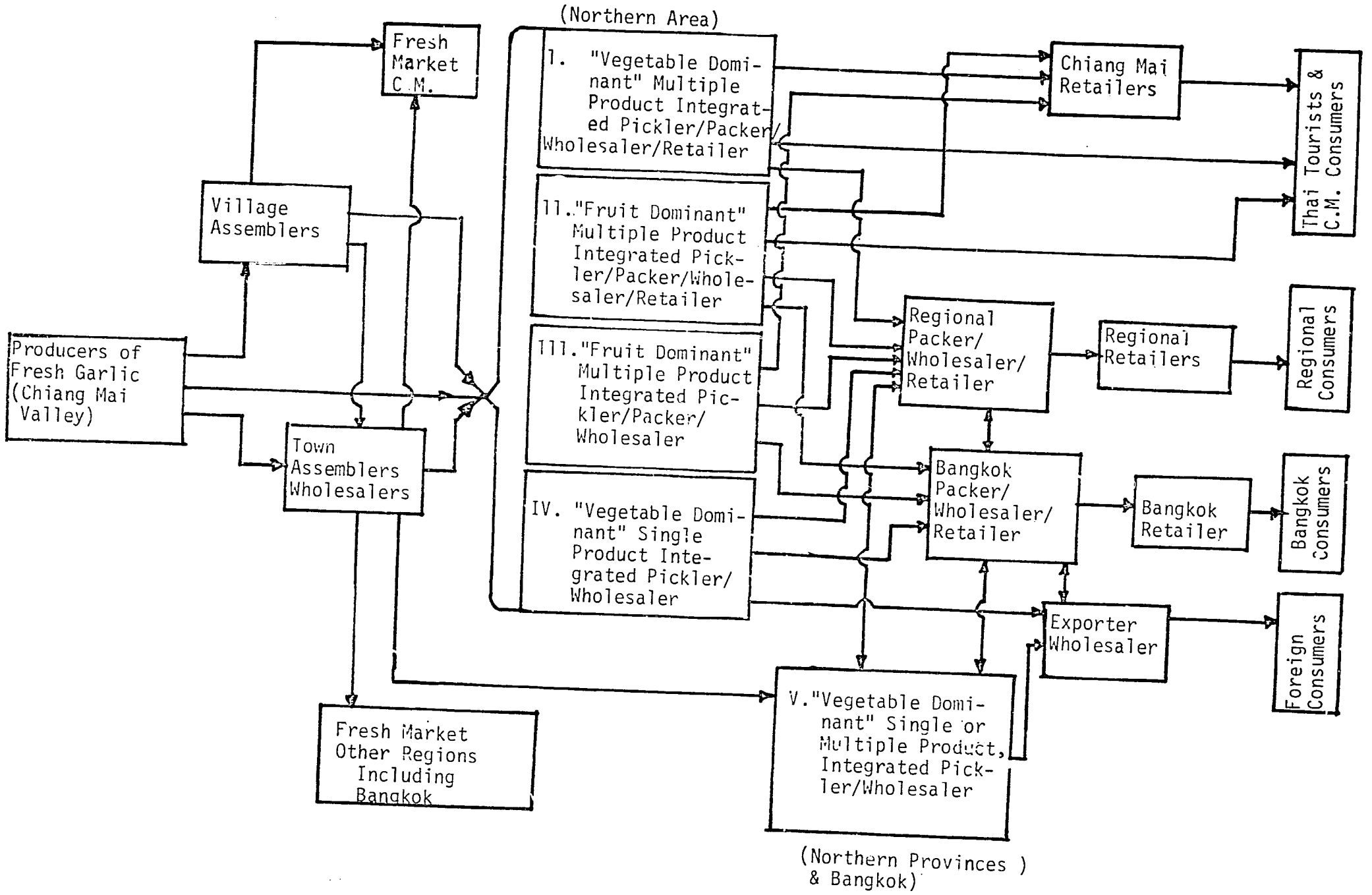

A subsector generally includes several industries, i.e. "Firms that are similar in functions performed and products produced,[4/] such as traditional picklers of fruits and vegetables or the modern canneries. Yet, the subsector focuses on the total vertical complex as a system with special emphasis on the linkage between stages, such as the linkage between the vegetable assembler and the pickling factory. One can use the analogy of a pipeline with inlets (input procurement), outlets (output sales) and valves (linkage and control mechanisms).

In this subsector analysis the basic concept of the structure-conduct-performance (S-C-P) framework is understood as"...market structure strongly influences market conduct of firms which in turn influences market performance. Market structure variables include number and size distribution of firms, entry conditions, and product differentiation. Market conduct refers to pricing policies, sales promotion actions, decisions on product characteristics, and actions by competitors to coordinate market behavior. Market performance is concerned with allocative and technical efficiency, progressiveness, product characteristics, and equity.[5/]

4/ "The Egg Subsector of U.S. Agriculture: A Review of Organization and Performance", 1978, NC 117 Monograph.

5/ Shaffer, James, "Food System Organization and Performance: Toward a Conceptual Framework" Dec. 1979, NC 117 Working Paper Series.

The research scope of this type of analysis is very broad and in this situation where few previous studies exist, statistical data are lacking and research funds for extensive primary data collection are limited, amore abbreviated approach has been implemented. Throughout this report reference will be made to interviews with other picklers, canneries, stores handling accessory inputs, commission agents and wholesalers handling raw materials, government agencies, university researchers, etc., however, the main focus of data collection and interpretation has been the firms within the ROFEAP's areas. Therefore the broader findings and implications must be understood with that inherent qualification.

The Chiang Mai Valley Pickled Garlic Subsector (Chart 1) has been developed as an example of what an initial assessment of a one commodity subsector includes and as a classification scheme around which all of our sample firms can be systematically analyzed. This subsector cuts vertically from the producer of the basic raw material to the array of final consumers of the final processed product. The research emphasis is on the types of pickling factories handling and processing garlic as one of several raw materials. Since pickled garlic was a primary product of most firms and the input procurement practices, processing technology, labor use and product sales patterns varied more between "groups of firms" as classified by dominant product types and functional integration than any other criteria, all firms will be referred to within this classification scheme.

Each group of firms in Chart I has different product specialties as well as primary and secondary marketing channels with different product prices and some differences in product form. The "Vegetable Dominant" Multiple Product Integrated Pickler/Wholesaler/Retailers (VDRI) usually sell their pickled products (mostly vegetables) through retail channels. Of the 4 firms identified in the ROFEAP's area 3 firms are in our sample.[6/] These firms sell 100% of their pickled products from small stands in the local food markets. The "Fruit Dominant" Multiple Product Integrated Pickler/Packer/Wholesaler/Retailers (FDR II) set of firms included 3 firms operating out large retail stores and 2 firms retailing in larger market stands. Our 2 samples from those 5 include firms selling over 40 food items from several types of food processors along with a wide range of their own pickled products. The "Fruit Dominant" Multiple Product Integrated Pickler/Packer/Wholesalers (FDWIII) were found to include only 3 firms, all of which are in our sample. The"Vegetable Dominant" Single Product Integrated Pickler/Wholesalers (VDWIV) included an uncertain number of firms, 4 of which we finally located and briefly interviewed. The difficulties of finding and interviewing this type of elusive firm will be discussed later. The "Vegetable Dominant" Single or multiple Product Integrated Pickler/ Wholesalers (VDWV) were identified outside our research areas but not extensively interviewed.

6/ Many households that sell pickled vegetables in various morning markets may also pickle 10-100 clay jars per year for their own use. This type of very small enterprise which was based monthly on sales activities was excluded from our study.

Raw Materials

For this type of enterprise the term raw materials will refer to the major "natural" materials whose form will be changed through the pickling-preserving processes. Pickling ingredients, packaging materials, and fuels will be treated separately as accessory inputs used up in manufacturing the final product.

The major raw materials include garlic, peaches, mango, and chinese mustard. Their common characteristics were few, namely, their general method of procurement and the solution used to pickle them. A few provinces, many village farmer-merchants (commission agents), and town buyers delivered pick-up truck loads of raw material to the local pickling factories during each crop's harvest season. (Chart 2). The very large wholesalers usually shipped a large portion of their raw materials to the Bangkok pickling factories during the latter part of the harvest season when prices were lowest.

Each raw material has its own distinctive set of suppliers thus making input procurement a very time consuming and demanding activity. The pickler had to accurately assess the supply condition for each raw material each year, thus the need to establish long term relationships with a set of commission agents for the bulk of their need while responding to new potential suppliers for the remaining amount. The initial raw material price seemed to originate from the interaction between the supplier and the pickler with the latter in a somewhat stronger position. From the price information obtained and related observations it seemed that

Chart 2: Primary Harvest Months for Garlic, Chinese Mustard, Peaches, and Mango in the Chiang Mai Valley.

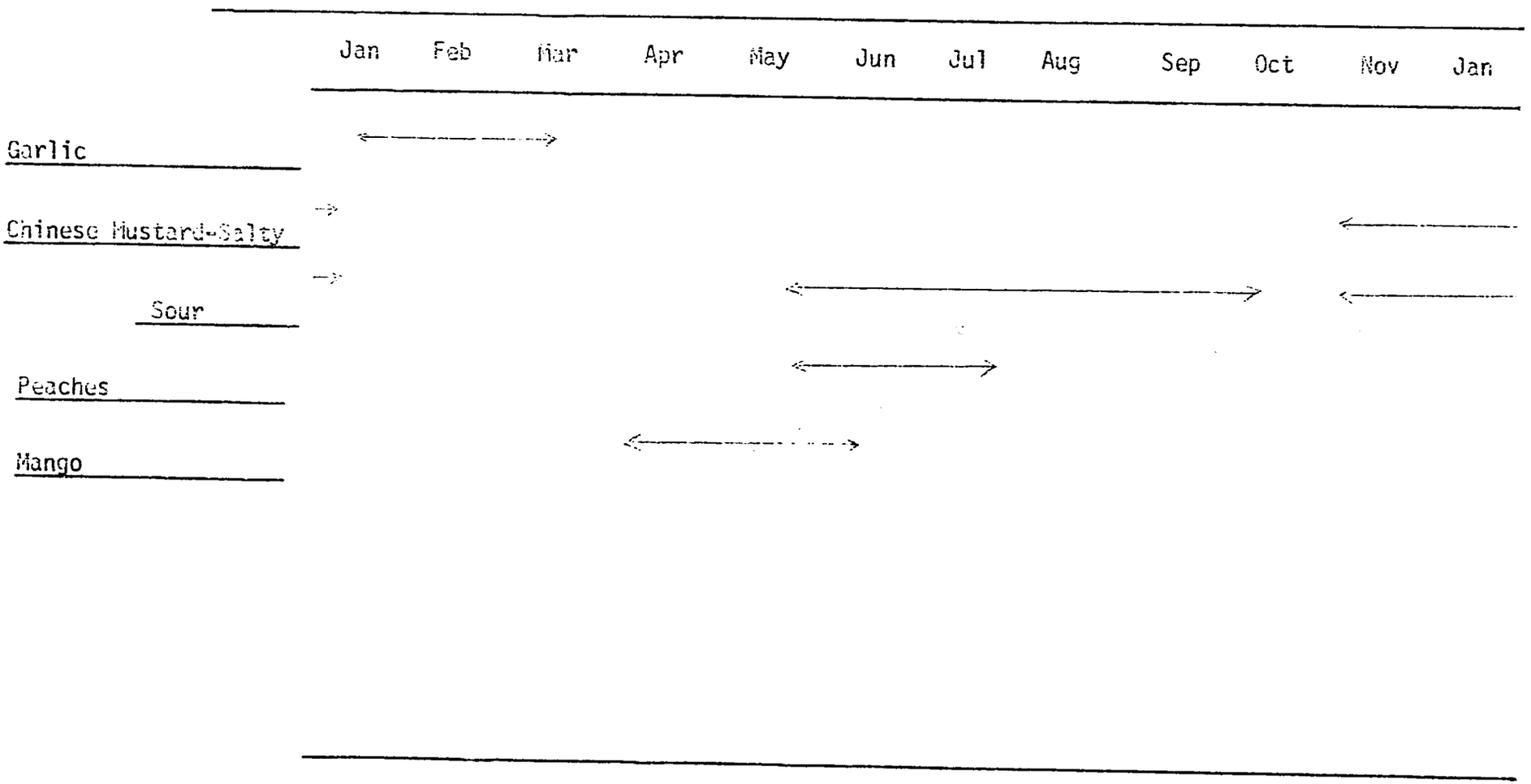

information on current raw material prices was informally exchanged among the older factories, although they would not admit this. Quality, type of supplier, time of purchase, and the limited use of credit affected the individual factory's raw material price which varied within the usual 2-3 months of procurement. The suppliers that we interviewed indicated wider price differences than the factories mentioned. In general, the smaller wholesalers in FDW III bought lower quality raw materials and obtained 10-25% of their needs on credit, i.e. paid B25/kg. more than the cash price and paid within 3 months, depending on the type of raw material.

The differences in the characteristics of the raw materials far exceeded their similarities, thus each will be considered briefly. Garlic was obtained from the two major lowland, paddy field production areas in the Chiang Mai Valley through many farmer merchants (commission-agents) and middlemen in or near the production areas. Most peaches were carried down the mountains to the highland towns by the hilltribes and sold to a few middlemen who brought peaches to sell at the factories. Mangoes are received from a variety of small and large scale fruit buyers who handle several varieties of mangoes in addition to varieties suitable for pickling. Chinese mustard suppliers seemed to include more producers than the other raw material suppliers, in fact the pickling factories said so many came to sell their product that the picklers could exert considerable pressure on prices yet get good quality for the winter in-season crops. Yet for the "off-season"

crops they had to arrange contacts with specialized vegetable producers.

The dynamics of price changes within the harvest season are very important in understanding the competitive positions of local, up country picklers and the Bangkok or Central Plains picklers. For each raw material the initial supply generally dictates the extent the price will fall from the beginning to the end of the 2-3 month season. After estimating the supply and their needs many of the fruit dominated local picklers with high quality products for tourists compete for the beginning and mid-season harvests. Once the bulk of their demand is met the local picklers of lower quality products and many of the vegetable dominated picklers begin offering lower prices. By the time the peak harvests arrive the price has fallen to a level that makes it profitable for Bangkok picklers to buy from the large wholesalers in the production areas. For instance, a Ø7/kg beginning price may fall to Ø5/kg in which case the price for the raw material delivered to the Bangkok factory becomes about Ø6/kg. Since most local picklers are not certain of the aggregate demand their early competitive pricing insures the bulk of their need but places them at a relative cost disadvantage in the long term.

Chart 3 illustrates some of the other major characteristics of the raw materials. For instance, the country-wide availability of raw material, i.e. Chinese mustard and mango is a major factor in explaining why most of our firms in Chiang Mai generally processed less of them. Whereas garlic and peaches are northern crops thus the emphasis on them by our firms.

Chart 3. Raw Material Characteristics

Characteristic	Garlic	Chinese Mustard	Peach	Mango
1) Major production locations	Lowland, paddy fields in the Chiang Mai Valley & other northern provinces	Upland & lowland fields in northern provinces & central plains	Mountainous areas near the Chiang Mai Valley	Upland and lowland orchards around the country
2) Main procurement season for pickling	January to March	November to early January	June to July	May to June
3) Prices during 1979/80 seasons	฿ 5-7/kg	฿ 2-3/kg	฿ 5-7/kg-local ฿ 10-14/kg-improved	฿ 3-4/kg
4) Alternative uses	Fresh garlic for pickling, semi-dry and dry for consumption	Mostly for pickling but some for consumption	Mostly pickling	Suitable pickling varieties
5) Varietal diversity for pickling	Single major variety	A few variet	A wild & cultivated variety& an improved variety	Few for pickling many for consumption
6) Cultivation	90 days	45 days	Three to five yrs. before a yearly harvest	Several yrs. depending on variety
7) Problems	Inconsistent quality and recent high price	Immature crop sometimes sold to the factory, thus spoilage	High price and resistance of hilltribes to reducing the price	Inconsistent quality from year to year

Chart 4 illustrates several of the basic characteristics of the accessory inputs which are very different than the raw materials. Because almost all of them come from the Central Plains area or abroad, the Bangkok picklers have a clear comparative advantage in the procurement and prices of those inputs. Yet, the lead time in procuring the inputs for the Chiang Mai picklers is relatively short regardless of the type of input. Credit is usually available in some form but it depends on the type of supplier and the credit worthiness of the particular firm. The profitability analysis undertaken by the project indicates that the accessory inputs amount for 30% to over 50% of the costs in producing the pickled garlic, depending on the final form, i.e. a clay jar or glass bottle.

Raw Material Problems

The increasing prices of the natural raw material was the most frequently mentioned problem. In 1980 that was especially troublesome due to the exceptionally high price of garlic during the January-March harvest season. Since the firms actively competed for the raw material they had to pay cash to their numerous suppliers thereby creating cash flow problems which may have plagued them throughout that year. With this year's lower price few firms mentioned the price problem. Besides the raw materials, the price of sugar had become a real concern, especially given the increasing emphasis on sweetened products. Thus, other than high prices and inconsistent quality problems for raw materials the firms seemed to have few problems with input procurement for their factories.

Chart 4: Accessory Input Characteristics

Characteristic	Bottles: Glass	Bottles: Plastic	Acetic acid	Salt	Saccharin	Sugar	Preservative
1) Major Sources of Supply	Factory near Bangkok	Factory near Bangkok	Importer in Bangkok or C.M.wholesaler	Chiang Mai suppliers	Importer& local factory	Bangkok or C.M. Wholesaler or retailer	Importer or Bangkok or C.M.supplier
2) Prices	฿ 7-15*	฿ 10	฿ 430-450/ container (China,Japan)	฿ 0.8-1/kg	฿ 85-95/lb.	฿ 8.50/kg	฿ 1,400/50kg.
3) Lead time for delivery	3-7 days	3-7 days	2-3 days	few days	few hrs to few days	2-3 days	few days
4) Max.	100-10,000 units		10-100 containers	20-250 sacks	few lbs.	100 sacks	1 drum
5) Observation	-Trend away from glass and toward plastic containers -Credit available		-Trend away from Japanese & toward Chinese brand -Credit from importer	-Credit available	-Credit available		
6) Problems	Breakage & heavy weight	Product has poor appearance	Rapid rise in prices	Some difficulty of obtaining in the rainy season	-Uncertainty about gov. policy -Poor quality of local product	-rising price	

* Includes transportation and breakage for medium sized bottles

Note: If the product is sold in clay jars, new clay jars are ordered from the Rotburi factories for ฿26+ or used ones are purchased for ฿18-20 each.

Processing

The technology used by the picklers extends back for several generations and has basically remained the same. The absence of machinery or even much large equipment is one of the most striking features of the traditional processes. The hundreds of large glazed jars for cleaning the raw materials and the thousands of medium sized, clay jars into which the raw material was packed and pickling solution added were the major type of equipment for pickling. A simple brick stove was used for boiling mango and peaches during the preserving process. The factories whithin which the processing was usually done ranged from a simple pole barn type of structure to a two story, reinforced concrete building complete with living accommodations. Shaded storage rooms or pole barns in which to store the glazed clay jars filled with the pickled garlic were common. The empty jars were usually stacked outside.

The pickling process for fruits and vegetables varied somewhat but generally followed this procedure;

1) clean and sort the raw material by size and quality;

2) soak it in a lime solution for a couple of hours (optional);

3) clean the glazed clay jars and fill them with the raw material along with the pickling solution;

4) fit a wooden plug in the mouth of each jar and seal with a thin layer of cement;

5) after two weeks to one month, the jars can be opened as needed and the pickled product packed in whatever containers are desired, i.e. plastic bags for sale within a few days or various sized bottles for sale over a three month period.

Some processors added a preservative during step 3, others in step 5 and some not at all because of the amount of salt used in the solution as well as the ripeness of the raw material.

The processing for preserved, sweet-dried peaches was done for these pickled peaches that were not as firm as required for a good pickled product. If the peaches were too ripe when pickled, the final product was not firm. The sweetening process included:

1) rinse the pickled peaches, cut out damaged spots, and make three or four cuts along the length of the peach stone which remains within the final product;

2) put those peaches, together with the sugar-preservation solution, into a large metal pot and boil over a charcoal or wood fire;

3) boil until they turn a dark brown color and pour these shriveled peaches into a basket to cool;

4) discard undesirable pieces while spreading the preserved peaches in a single layer on a round, shallow bamboo container for drying in the sun; and

5) after drying, pack the product into an assortment of plastic bags or small boxes.

The amount of sugar basically determines the degree of sweetness or sourness. This basic set of steps was used for mango and peaches. However, these steps were varied in several ways in order to produce new sweetened products with a wider market appeal among women and children.

Employment

Employment has several dimensions, however, the main points of interest here are 1)what is the nature, composition, and functions of labor for our firms, 2) how much employment is generated at the major stages within the production-distribution system, and 3) what are the prospects for expansion of or changes in the employment at the various levels.

"Nature, Composition, and Function of Labor"

All the firms within our sample were family businesses, thus an understanding of the role of the family is essential. The family generally consisted of the core of management element (husband, wife and sometimes an elder child), the other immediate members (sons, daugheers, sisters, and brothers), and relatives (son-in-law, cousins, etc). Work that could not be handled by this "family" was done by hired laborers under the supervision of the family members. The family members may participate in the business on a part-time or full-time basis as well as by direct or indirect means. Part-time family members had other employment or study obligations, such as a husband who returned from his government clerical position and helped his wife pickle in the evenings or the daughter who packed pickled products after school and on weekends. Indirect participation included relatives who sold the firm's products at stands in the morning markets or who worked in food research institutes and provided pertinent technical information to the

firm regarding new products.

The major function undertaken by family members included 1) marketing, i.e. both raw material procurement and product sales, 2) management of the production process, i.e. mixing the "secret" solutions and supervising hired labor, 3) basic record keeping, and 4) participation in the production and packaging processes. For the fruit dominated wholesaling firms (FDW III) the men were responsible for procuring the raw materials, delivering a fresh supply of products and receiving the payment due from the prior delivery, and overall record keeping, while the women managed the production process and supervision of the factory labor. Yet, for retailing firms (FDRII) the women handled the product sales whereas the men were usually responsible for the raw materials procurement and production management. The different divisions of labor allowed the women 1) to come into direct contact with the consumer, a popular method of retailing food products, and 2) limited the amount of traveling for the women.

The children undertook a wide range of tasks, generally according to their ages, time available, and the time frame of the firm in the stuffing, packing, and sales cycle. Young school children spent considerable time after school and on weekends filling the various types of containers with the pickled products. Older children were either given practical experience in operating various aspects of the business or branched off into outside interests of a personal nature. For several firms the children appear to be a major consideration to a firm's long-

evity and a key factor in the owner-operator's decision to expand the business, maintain it at the current level, or go out-of business. For instance, one firm credited his firm's strong position to the increasing help of his son while another firm mentioned that if he had more family members, he could contact more customers, i.e. sell more.

The methods used by the firms to supervise their hired labor seemed to vary from firm to firm. Some firms closely supervised and set the pace for each type of work undertaken while others gave general directions and let the workers set their own pace. Permanent workers were few but were given responsibility for important steps within the production process, taught and supervised temporary laborers, and sometimes participated in selling the products. Temporary labor, the bulk of the hired labor force was generally hired on a periodic basis during the clay jar stuffing periods, i.e., February, March, May, June, and July.

Since the technology used in the pickling process is relatively simple and required no special skill, most picklers considered their hired workers, permanent or temporary, as non-skilled or at best semi-skilled laborers. A worker could join the fast paced, clay jar stuffing as pick-up truck after pick-up truck of raw materials arrived, then shift to dressing pickled garlic and packaging it into bottles during the off-season. Experience in packing bottles seemed to increase the worker's output per unit of time, yet the firms did not seem to place

a high priority on retaining permanent laborers with that experience. Then labor use patterns reflected two conditions 1) the factory's high demand for labor during the short harvest periods of the perishable raw materials, yet a limited need for hired labor during the balance of the year and 2) the multiplicity of products and/or forms in which the products were packaged. For instance, within the fruit dominated retailer group of firms one firm produced large quantities of a few basic products in a limited variety of forms, thus it would periodically hire a large group of temporary laborers to complete one or two sets of activities within a week to ten days, then for a couple of weeks only one or two permanent workers would remain in the factory. Whereas another factory within that same group of retailers processed a medium amount of the basic products plus small amounts of many other products in a wide variety of forms, thus it hired a core of 10 to 15 "temporary laborers" who worked 28 days every month with additional laborers hired during the peak raw material periods. The first factory spent about ₱5 per worker to transport transport the workers to the factory and paid about ₱30-40/day for males and ₱25/day females. The latter factory hired the core group of local female laborers for ₱25/day. The difference is between many laborers working in time blocks of several days and fewer laborers working continuously (yet with considerable turnover in personnel, thus the designation as temporary).

The distribution of work between males and females was usually relative to physical strength.* The male workers carried raw materials, stacked clay jars, and loaded trucks while the female workers stuffed clay jars and dressed and packed final products. The pay differential ranged from ฿5- ฿10/day with male workers receiving ฿30 -40/day and the female workers earning ฿25-30/day. During the rice planting and harvesting periods the labor situation was tight but not critical. Some firms mentioned that the daily wage for women in the area of their factories was usually lower therefore they preferred to hire female laborers. Also workers who had previously worked for a particular factory received at least a few baht per day more than new comers for the same type of work.

The source of and problems with temporary laborers often depended on the location of the factory. Those located very near the down town area hired laborers from the urban labor pool, however, since these factories wanted to pay the lowest possible wage for somewhat unpleasant work they not infrequently could only hire persons who could not find any other job at that particular time. Thus problems of poor work, short days of work, etc. arose. These problems forced one large firm to transport workers from outside at a cost of about ฿ 5/person. For factories around the periphery of the city, their core laborers from the outlying areas contacted their neighbors and friends as the factory needed short temporary labor. Such personal contacts generally provided good workers. And for a factory far from the city, the local

* One exception was a firm owned and operated by a mother and her two daughters - it hired only females, including a few Amazons to do the heavy lifting.

villages provided reliable workers at ฿25/day.

"Employment Generation"

The Employment generated at different stages in the production-distribution system will be briefly outlined based on the limited information available. The major stages include the production of the raw matrrial, basic pickling process, and packing or reprocessing into alternative forms.

Chart 5.

Pickled Garlic Production System

Farm Production of 867 kg/rai of trimmed fresh garlic (equals approximately 2,000 kg untrimmed garlic-normal yield per rai)	Basic conversion of 867 kgs of fresh garlic to 72 clay jars of pickled garlic	Dressing and packing pickled garlic into 852 medium sized bottles
64-70 person days ฿3,988 gross value of this commodity at 1981 Farm price/kg.	6.5 person days ฿8,640 gross value of this commodity at 1981 wholesale price/clay jar	28.4 person days ฿25,560 gross value of this commodity at 1981 retail price/medium sized bottle

Chart 6

Pickled Garlic Processing

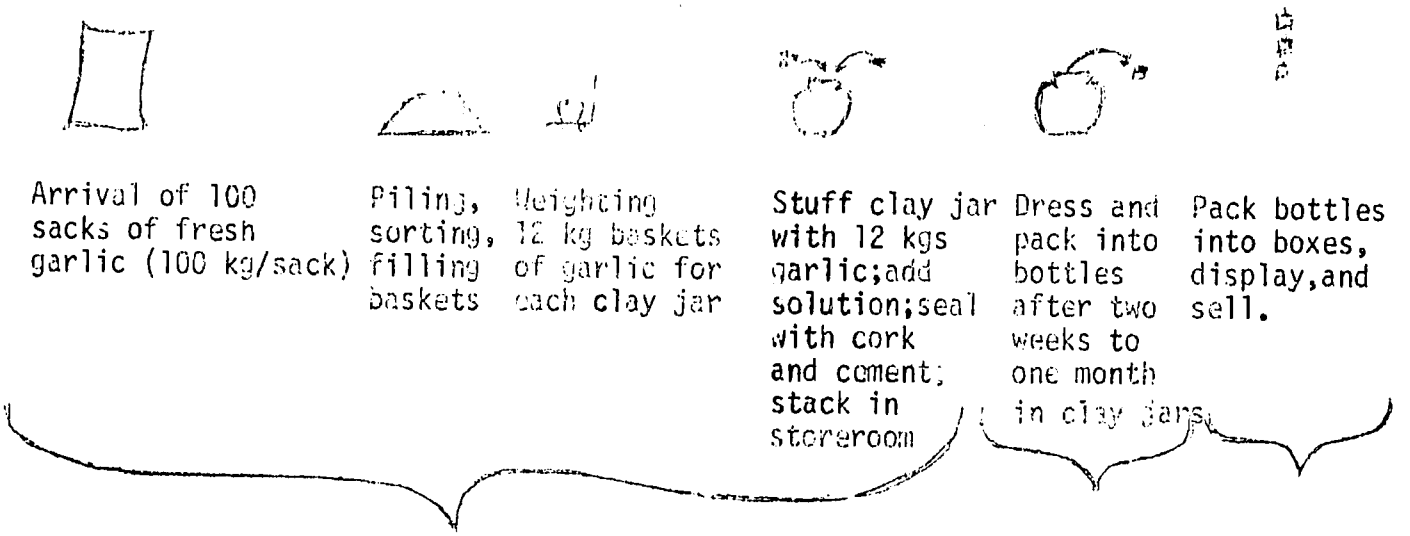

Stage I M 1.5 mandays

F 6 mandays

* Estimated

Stage II

M 0 mandays

F 31 man-days

State III*

M 1 mandays

F 4 mandays

The Pickled Garlic Production System (Chart 5) provides insights into the nature and scope of employment generated by pickled garlic from the farm to factory. If the garlic in clay jars are sold to retailers in the fresh food markets the gross value of that commodity at 1981 retail price in Chiang Mai markets would be about ฿ 17,040 from that 1 rai of fresh garlic. It is important to note that garlic is just one of the several crops pickled and is used here to illustrate the dimensions and rural location of the labor generated by fruit and vegetable processing.

In the Pickled Garlic Processing Chart 6, Stage I is mostly done by temporary labor, stage II predominantly by family and permanent labor for smaller firms or permanent labor and temporary labor for larger firms, and Stage III by family members. Yet, one can always find exceptions to this common arrangement due to "family size", different perceptions of labor management, multiplicity of products, and the distance of the factory from the heavily populated areas.

Another approach is to consider the labor use by season, type of factory grouping, and relationship between family and hired labor (Charts 8, 9, 10). The magnitude of labor use reflects the relative firm size, type of outlet (retail or wholesale), and mix and form of end products (clay jar vs bottled). There is considerable difficulty in separating out the labor used in retailing products bought from other sources and sold along with the products of the pickler's factory for FDR II which is not the case for VDR I and FDR III. Although the FDR II firms are larger than the others, the additional sales labor exaggerates that difference, however, if fewer family members were used to sell the wide range of products the hours of temporary labor use not family labor use would be decreased to account for the shift of family members from sales to production. Also the "families" were larger for the FDR II factories.

The vegetable dominated retailers were clearly women's firms both for family and hired labor. Seasonal labor use differences between VDR I relative to FDR II and FDR III reflect product differences. Relatively limited use of labor by VDR I firms results from the com-

position of the sample, i.e. 2 especially small firms, and the nature of this type of pickler which has only one local fresh food market outlet.

"Prospects for Change"

Among the various possibilities for improving labor productivity is paying by piece rather than on a daily wage basis as done in other industries. Yet under what conditions is that beneficial? When we asked a family member of a highly reputed factory why his factory's labor time for dressing and packing garlic in bottles was so high compared to other factories, the response was that piece work resulted in lower costs resulting from more output per worker but produced a "poorer quality product" in that the appearance of the garlic in the bottle was not nearly the same. Thus, he recognized the additional cost savings from a piece work approach yet considered the "appearance" of the product as more important relative to the market he served, i.e. tourist market. An alternative approach would be piece work for dressing the garlic and wages for bottling rather than combining both operations, yet this would require closer supervision and coordination with only a marginal change in costs. In the final section of the paper the prospects for change will be discussed in more detail.

Product Sales

This dimension was a major distinguishing characteristic between fruit and vegetable dominated processors. The fruit processors' products were packaged for and primarily catered to the tourists and

the wholesalers from other parts of Thailand. Their brand names have often become associated with particular product lines and thus were preferred by visitors to the Chiang Mai area. However, the types of sales outlets ranged from a large processor with two retail stores to medium and small sized processors with almost all of their sales to wholesalers. Processors with retail stores sold not only the products they produced but also sold a wide variety of related food products bought from other types of food processors. Other sales techniques included giving commissions to tourist organizations or agencies who brought bus loads of tourists to the factory, maintaining small stands in the local markets, etc. As competition within the full range of traditional pickled products has become very strong, there seems to be a trend toward producing more dried preserved products packed in a variety of plastic containers as well as searching for new sweetened products, especially as "snack foods."

The products of the vegetable dominated processors were usually displayed for and intended for daily consumption as a part of a meal rather than snack consumption. These processors mainly relied on the local retail demand,i.e. sales in the local food markets. The largest market place catered to the middle and high income consumers: thus these food stalls displayed a wider array of higher priced, quality products often packed in a wide assortment of containers, such as bottled garlic, ginger, and peaches. Other products such as pickled chinese mustard and bamboo shoots were generally taken directly from the large clay jars and sold in whatever weight was requested. In the neighboring market place catering to the lower and middle income clientele,and pickled products such as

Chinese mustard, bamboo shoots and garlic were displayed in large basins and sold at whatever quantities were wanted. Besides the type of customers served another difference between those large market places was their age the largest market was a newer structure.

Capital

Buildings, land, large mixing containers, and thousands of clay jars repeatedly used for pickling may be considered the main tools and capital assets. However, for firms which sell their products in the clay jars, rather than use the same clay jar for 10 years or more for pickling, the clay jar is clearly an accessory input. All the firms in the ROFEAP"s sample repeatedly used most of their clay jars while several large firms interviewed outside our sample area sold their product in clay jars.

No machinery, except for small electrical water pumps, were used. Broken clay jars were replaced by purchasing used clay jars brought to the factory by peddlers or ordering new clay jars directly from factories in their major production area near Rajburi for 26 baht, depending on quality, quantity of purchase and business relationships with those factories.

Working capital was a major concern for the factories, especially for wholesalers who not only had money tied up in the heavy inventories of final products but as accounts receivable from the retailers they supplied. The basic need for working capital was dependent on the season of the major raw materials to be pickled thus for factories with mostly peach and mango products, May and June, were very difficult periods

to finance.

When asked about capital needs or constraints, practically no firm considered investment capital as any problem. If needed they could obtain investment capital but working capital was repeatedly said to be a problem because of its seasonality and the lack of sources. Most firms that were considering expansion mentioned working capital as the reason for not expanding in the near future.

PROSPECTS FOR CHANGE

This aspect has two major dimensions, the change in the size of the pie and the distribution of its pieces. Both aspects can only be considered with a better understanding of the Bangkok market for sweetened products and the competitive position of the Bangkok pickling firms who are a major force in the market. There are indications that some Bangkok firms are shifting their pickling operations to the North, thus accounting for the recent increases in firms there. Other observations regard a major change in the Bangkok firm's method of raw material procurement from buying through the garlic wholesalers in Songwad area of Bangkok to direct contact with wholesalers in the North, thus cutting their costs of raw material. Also diversification from firms that only pickled to firms that do both pickling and canning. Another major concern regarding competitive position's labor productivity, several firms in the North contend that Bangkok laborers are far more productive thus placing the Chiang Mai firms at a cost disadvantage.

These and several related issues make it unclear whether this industry has a growth potential or not because we are focusing on only a single part of the total

The issue of comparative labor productivity is a very crucial point for many of the ROFEAP's industries and needs to be examined in relation to wage rate differences. The UFC cannery in Lampang has repeatedly mentioned this aspect in assessing its competitive position relative to canneries in the Central Plains and Bangkok.

"BARRIERS TO ENTRY"

The picklers were in full agreement that new firms could get established and survive in this kind of business if three aspects were assured: (1) knowledge of how to produce a quality product which includes "secre" solution adn ability to judge the raw material suitable for pickling, (2) sufficient capital,especially working capital, and (3) market share within the current market or in a newly established market. Almost all firms emphasized the difficulty of finding the market for their final product and the large amount of capital needed, especially to cover initial business losses and to build product inventories. One firm mentioned the inherent logic of the most frequently followed business practice, that is starting small as a one man operation and expanding as one gains experience and establishes a market share.

"FIRM RESPONSE TO ECONOMIC OPPORTUNITIES"

The seasonal nature of the raw material, i.e. availability for only a 2-3 month period,makes a response to new opportunities more

difficult for small firms. If new buyers come during periods when suppliers are low and offer to buy large quantities, (the small firm has insufficient stock thus loses that opportunity which in turn causes the buyer to look elsewhere, i.e.large firms. In the noodle, cement, and other industries response time can be within days or week when operating below capacity - but that is not the case for picklers. If the small firm over anticipates demand, borrows money to increase raw material purchases in season, and yet, if that demand does not materialize, his inventory of pickled products spoils and he goes out of business. Thus, there seems to be a trend toward diversification and shifting toward new sweetened and preserved products which are move acceptable to a wider range of people. That shift should translate into further employment at the rural producer and of the production-distribution system.

"PROFITABILITY"

The question of the level of profit by product is especially useful in comparison between industries but can only be inconclusive for within industry comparisons due to the size of sample by type of firm and extreme sensitivity of undividual firms concerning the nature of their formula, a critical point in defining quality differences within products. The relationships between profit margins per product and level of sales is also a critical point since narrower margins but high volume of sales may be more important than high margins but low volumes. Processor/ Retailers in the food markets were said to earn more profit than processor/ Retailers in the tourist stores due to considerably lower costs in producing the final form, i.e. product in a basin vs bottled product yet

the volume of sales was less. Wholesalers with an aggressive marketing technique supposedly made more profit than wholesalers who waited for buyers to come to their factory. Yet, the pivotal problem becomes comparability of "quality" which is not easily captured in production cost and price data. Another cost factor is that in production cost and price data the wholesaling channel commonly requires a month or more delayed payment for products sold to retailers as well as the return of spoiled products. Poorer quality meant more spoilage and losses due to returned products - a phenomenon firms did not want to discuss. In general the firms with aggressive marketing techniques and larger size were in a better position than the smaller firms as noted from a combination of cost data, use of credit for raw materials, and the retailer's assessment of firms with "poorer quality products".

"Product Flexibility" - several large pickling factories in Bangkok have diversified into modern cannery operations for not only fruits and vegetables but <u>also</u> fish products. Similarly, large modern canneries of fruits and vegetables "upcountry" include a product line of pickled chinese mustard while canneries in or near Bangkok not only include pickled chinese mustard but also process fish in tomato sauce, thus combining vegetables with other foods. More important are the implications of transferring production from canned fruits and vegetables to canned fish and vice versa, thus increasing the use of plant capacity, steadier employment, quicker response to market demand and supply conditions, etc. Yet, questions of product health standards, over-

production, stability of local markets, etc. may arise if such product flexibility is not coordinated when the very large BOI supported fish processing factories soon come-on-line.

Chart I. Seasonality and Composition of the Labor Force for VDR I Picklers

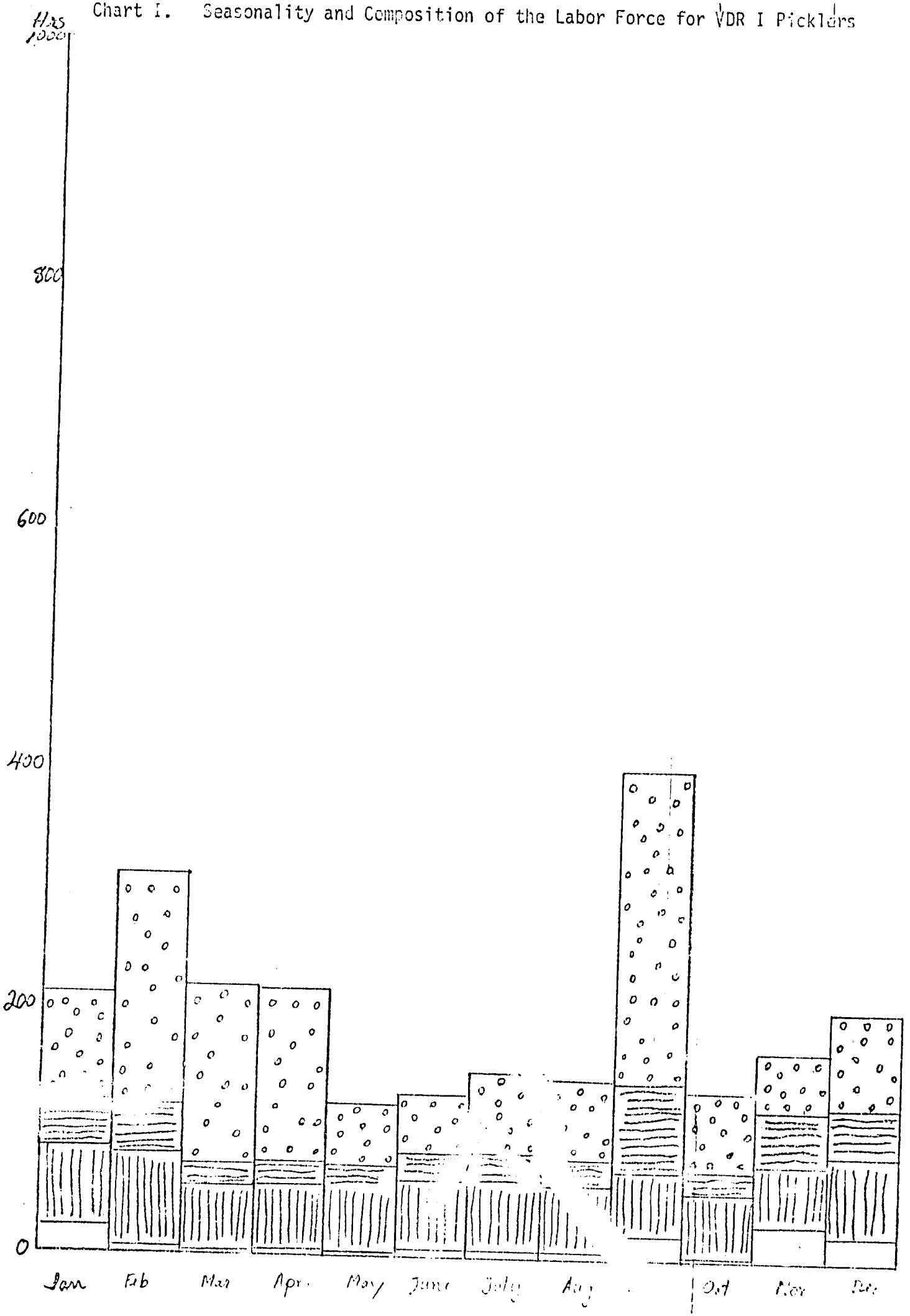
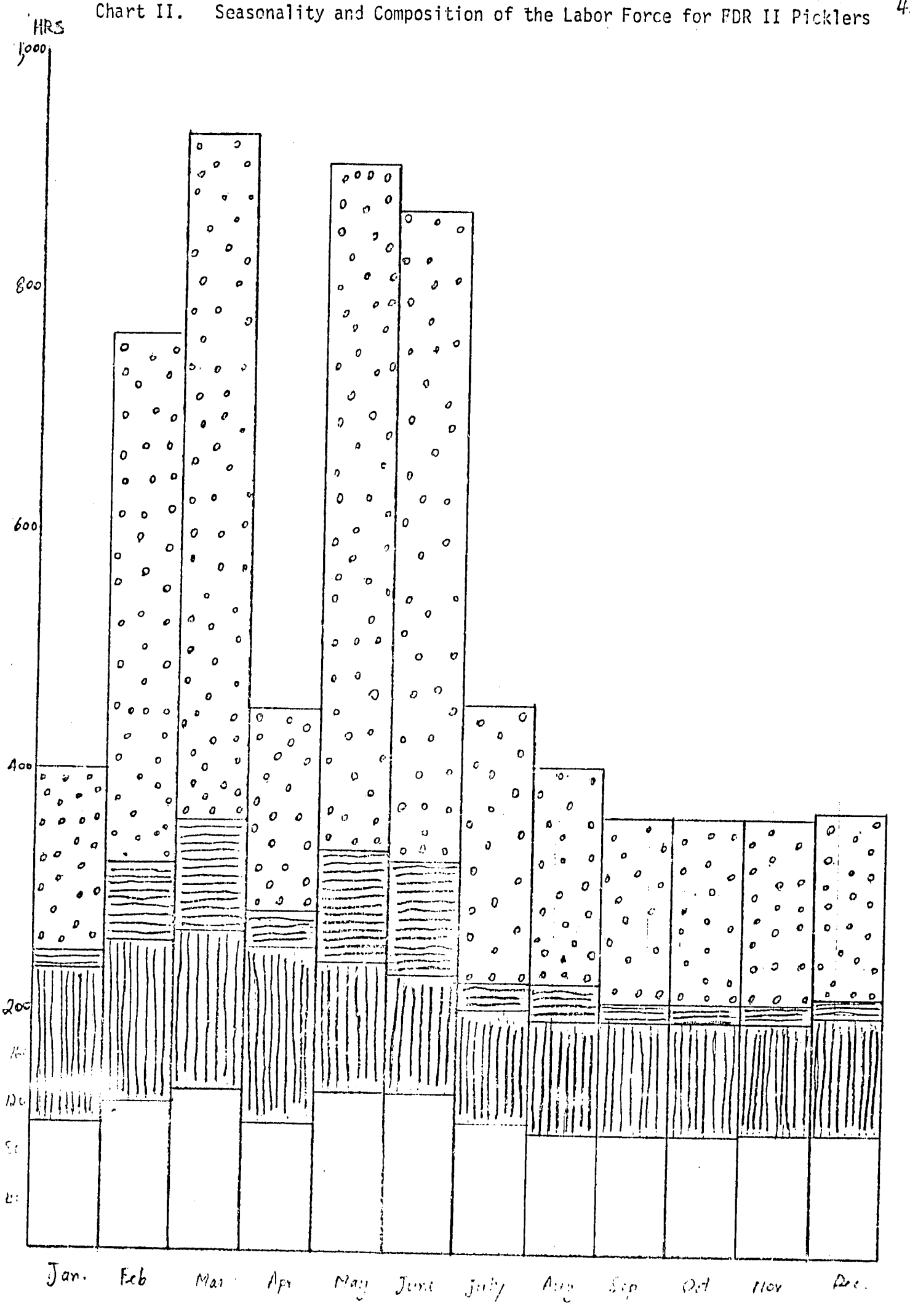
Chart II. Seasonality and Composition of the Labor Force for FDR II Picklers