IES
UNIVERSITY of KHARTOUM
ID
CLARK UNIVERSITY

ETMA PROGRAM / SUDAN

Environmental Monitoring
Baseline and trend analysis reports

The Dinder National Park
Study Area
« Central Region »

By Dr. A. I. Mograby
Associate Professor
Institute of Environmental Studies

Prepared for :
the united states agency
for international
development
project No. 698 - 0127
december 1983

THE DINDER NATIONAL PARK

STUDY AREA

((CENTRAL REGION))

BASELINE REPORT
TREND ANALYSIS
AND
FIELD REPORT

Group Leader: Dr. A.I. Mograbi

Group Members: Dr. M.B. Nimir

Dr. S. Hakim

Dr. Lutfi A.B. Desougi

Associate Members:

Mr. Mohamed Younis

Mr. Omar El Gouni

TREND ANALYSIS AND BASELINE INFORMATION - DINDER NATIONAL PARK

(December 1983)

RESEARCH TEAM

Dr. A. I. el Moghraby	-	Team Leader
Dr. Dawi Musa	-	Researcher
Dr. M. Nimir	-	Researcher
Mr. S. Hakim	-	Researcher
Mr. El Amin el Daie	-	Assistant Researcher
Mr. Kamal Abdallah	-	Assistant Researcher
Mr. Mohd Younis	-	Assistant Researcher
Mr. Omer el Gouni	-	Assistant Researcher

The present manuscript has been compiled and edited by Dr. I. el Moghraby.

TABLE OF CONTENT

	Page
INTRODUCTION	1
GENERAL CHARACTERISTICS OF STUDY AREA	3
- Geomorphology..	3
- Geology	3
- Climate	5
- Flora	5
- Fauna	6
- The ecosystems	8
- Human populations	10
TRENDS	10
INDICATORS	16
SUMMARY	21
REFERENCES	23

TABLES AND FIGURE

	Page
Fig. 1	1
Fig. 2	2
Table 1	13
Fig. 3	17
Fig. 4	17

INTRODUCTION

The Dinder National Park is the closest national park to urbanized centers in Sudan. It is located in the Southeast of the Central Region. Its boundries follow the river Rahad at latitude 12° 26 N and longitude 35° 2 E, it continues into a southwest direction up to latitude 12° 42 N and longitude 34° 48 E at River Dinder. It further continues up to latitude 12° 32 N and longitude 34° 32 E along Khor Kinana. It then diverts slightly to the Southeast, to latitude 11° 55 N and longitude 34 44 E, to be enclosed by the Sudan-Ethiopian borders at latitude 11° 24 N and longitude 35° 2 E. The National Park was 6330 km^2, however in March 1982 the area was increased to 8960 km^2 (Fig. 1).

Dinder was proclaimed a National Park in 1935 following the London Convension for the conservation of African Flora and Fauna. During the same decade many African national parks were declared.

The drainage complex of the Rivers Dinder and Rahad is located in the Ethiopian plateau sloping down from 3133 meters above sea level to 200-400 masl at the southeastern reaches of the Dinder Park in Sudan. The Rivers Dinder and

FIG 1. SKETCH MAP OF DINDER NATIONAL PARK&ENVIRONS.

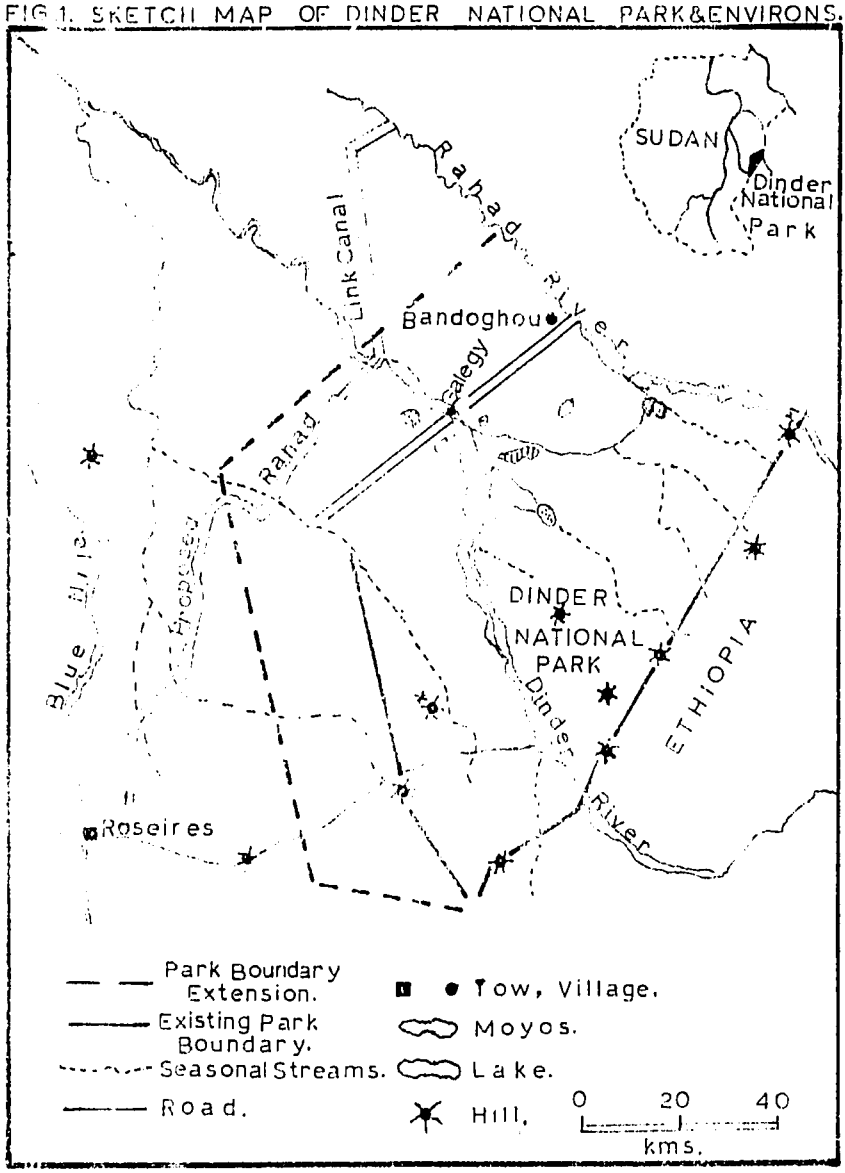

Rahad descend vigoursly from the Ethiopian Plateau and traverse the park in a westwards direction across the Sudan-Ethiopian borders. Their gradient drops gradually and then flow into a northwesterly direction, until they join the Blue Nile near Wad Medani. River Dinder is about 750 km long. It's cutchment area is approximately 16 X 10^3 km^2 and it has an average annual discharge of about 3 X 10^9 m^3 per year. The river varies considerably in depth and width, hanging from 50--400 meters in width , and 1-9 m in depth. It is a seasonal river, which starts flowing towards the end of June. The peak flow is during September and ceases running in November. A number of pools are left behind which may hold water up to the next rainy season.

Along the river course levees (Gerf), meadows (mayas) and Kerrib landforms were developed .

Fig. 2 cross-section of the valley of the River Dinder showing the various formations found (After Holsworth, 1968).

Mayas exhibit different shapes which are in general crescent like. Their areas vary considerably according to the former meander bends of the river. Areas of mayas vary between 0.16 km^2 and 4.5 km^2. Generally mayas are flat with slight and/or no clear banks.

GENERAL CHARACTERISTICS OF THE STUDY AREA

Geomorphology

The most distinctive geomorphic feature of the geomorphology of the Sudan is its clay plains. The Dinder National Park belongs to these clay plains. Whiteman (1971) stated that " the clays of Rahad and Dinder are probably the most striking feature of the geomorphology of the Sudan. Deposits of alluvial origin were laid down, as Tothill (1948), Berry (1962) and Berry and Whiteman (1968), have suggested, by over-bank floods from the Blue Nile and its tributaries. The clay plains have actively developed probably in the Pleistocene and the current soil cycle was probably developed during the Holocene wet phase. They reach a thickness greater than 12 m at places, but they get thinner in the northern areas of the plain.

Geology

Little is known about the basement complex north of latitude 6°N . However, they include igneous, metamorphic and sedimentry rocks overlain by horizontal and subhorizontal Palaeozoic or Mesozoic sedimentary or igneous rocks. They are assumed to be mainly of pre-cambrian origin.

El Atshan formations, are dominant in the area. They are characterized by the presence of beds of calcerte at the top of older alluvium and at the base of the clays. The sediments of these formations consist of unconsolidated sands, sometimes gravelly, clayey sands and clays. The clays are mainly buff to greyish-white or greenish grey. Sediments are unsorted, and the feldspar and biotite present are often undecayed. The age of these formations is uncertain (most probably they are of Tertiary to Pleistocene origin). (El Daie, 1982).

The vertisols of the park are characterized by dark grey or very dark greyish-brown tones. They are sticky and have a high cation exchange capacity. They swell when wet and shrink when dry, forming deep cracks which may exceed a meter in depth. They form hexagonal and pentagonal blocks up to 10 m across, at the faces of contact. The clay content of these soils varies between 50-80 %. Coarser material and $Ca\ Co_3$ are found in merger amounts. The display of black colour at the surface is due to weathering. The colour becomes white deeper down. The soils are sometimes alkaline with pH 8.5-9.5.

Interspersed with vertisols are the entisols. There are sandy clay and sandy loam soils. They are common around the hilly portions of Dinder area and along the banks of the the Rivers Dinder and Rahad (Dasman, 1972).

Climate

There are no meteorlogical stations at Dinder Park thus no specific records of the climatic parameters exist. However, the area falls within a zone where winter is warm and dry. The rainy season starts in June and lasts to the end of October. Intermittent showers occur in May. The average annual precipitation recorded in stations around the park ranges from 340 to 700 mm.

The average maximum daily temperature between November to February is 30°C , while from March to the start of the rainy season the temperature averages 38°C .

Flora

The vegetation in Dinder Park has been classified as open grassland, wooded grassland, woodlands and riverine forests. Different species were recorded, but the communities lean towards simplicity (Harrison and Jakson, 1958).

The dominant tree species, recorded during the present study, in the park are Acacia seyal (schweinf) and Balanitiea aegyptica (L), in the clayey plains Combretum glutinosum (Ferrott) and the Acacia polyacantha (Willd) are found in the drained silty soils (Azaz). Along the rivers, khors and at the peripheries of the Mayas, Zizyphus spina-christa (L),

Acacia nilotica (L), Acacia sieberiana (DC) and Tamarindus indica (L) occur. Hyphaene thebaica (L) is dense along the edges of the River Dinder. Associated with H. thebaica, surrounding the hilly areas, are Combretum hatmannianum (schweint), Anogeissus bicarpus (Brown & Massey) and Adansonia digitata (L). In the less moist heavier clays Acacia fistula (schweinf) is found with Acacia seyal. They are also found in areas where intermittent floods occur during the rainy season.

The savannah grasses of the area such as Hyparrhenia spp and Beckeropsis spp, have been replaced in some places by annuals like Cyperus sp, Echinochloa sp and others. Along the "Gerf" of the Rivers Rahad and Dinder are large areas of tall grasses e.g. Sorghum sp. This species also covers some of the hayas. Echinochloa and Sorghum sp intermingle with short grasses like Panicum sp. Where water is abundant, Bracharia sp, Cynodon sp and Pennisetum sp thrive in a green-mat form throughout the year.

Fauna

Knowledge about wildlife distribution , migration, habits, densities, numbers and age groups is limited. Serious research work covered small areas and limited species. A variety of species in the Dinder National Park are represented

in good numbers. outstanding of these are the densities of the reedbuck and the gunnies fowl and the diversity of birds of prey. The fauna of Dinder includes :-

Reedbuck	Redunca redunca
Tiang	Damaliscus tiang
Waterbuck	Kobus defassa
Roan antilope	Hippotragus equinus
Kudu	Tragelaphus strepsiceros
Buffalo	Syncerus caffer
Girrafe	Giraffa camelspardalis
Bushbuck	Tragelaphus scriplus
Ostrich	Struthio camelus
Oribi	Ourebia ourebi
Redfronted gazalle	Gazella rufifrons
Dik dik	Sylvicapra grimmia
Cheeta	Acinonyx jubatus
Lion	Panthera leo
Leopard	Panthera pardus
Hyena, spotted	Crocuta crocuta
Hyena, striped	Hyaena hyaena
Serval	Felis serval
Civit cat	Viverra civeta
Wild cat	Felis silvestris libyca
African hunding dog	Lycaon pictus
Mongoose	Mungos mungo
Honey badger	Mellivora capensis

Baboon	Papio anubis
Grivet monkey	Erythrocebus patas pyrrhonotus
Red hussar	Erythrocebus patas
Pangolin	Manis sp.
Aard wolf	Aardrook orycteropus
Porcupine	

There are also over 250 species of birds. The elephant migrates to the Park during the rainy season. Furthermore the Park teams with many species reptiles and small mammals.

The Ecosystems

The park has three major ecosystems, each with its own specific plant and animal communities and each contributring to the overall diversity of the park (Harrison & Jakson 1958) . Largest in extent is the Acacia seyal, Balanites aegyptica, and Combretum spp woodland which is characterized by heavy cracking clays and tall coarse grasses (including Sorghum sp.).

Along the banks of river Dinder and the larger of the seasonal streams (khors) is a riverine ecosystem. The forest here is multi-layered . The upper region consisting mainly of Dome palm (Hyphenia) and Acacia sieberiana, while the lower area containts Ziziphus abyssininca and

Mimosa pigra. The dominant grasses are Sorghum sp and Brachiaria sp.

The most important ecosystem for the wildlife of the Park is the "mayas" ecosystem. The "mayas" are meander cut offs that are gradually being infilled by sediments derived from their own small catchment areas. It appears that the water supplied to the mayas is not derived from the adjacent river but from their own local areas of runoff and ground-water sources. These mayas are important because they provide the main source of nutritious grasses for the wildlife. In particular the mayas provide Echinochloa spp, for the animal populations during the most severe part of the dry season (March to June).

When the Park was originally established its boundries were demarcated for reasons of administrative convenince rather than any clear understanding of the ecological systems or zones (Dasmann, 1972). Thus the region occupied by the park has never embraced a self-sufficient ecological area. The wildlife in the park must depend on extensive grazing areas adjoining the park. During the wet season, large numbers of animals migrate outside the park's boundaries to areas where their movements are not impeded by dense stands of Sorghum sp. and where there are drier soils with shorter and more nutritious grasses such as Hyparrhenia spp. In the dry

season the animals return to graze along the banks of the Dinder and on the perennials that flourish in the well-watered mayas.

Human Populations

Towards the end of the last century the Dinder area was deserted due to famine, and pestilence. The area was practically uninhabited when it was declared a National Park, in 1935. Legislation was passed to combat tress passing into the park . El Re[illegible] , a village 60 km away from the Northern boundries of the Park, was relocated even farther away from the boundries in 1974 because of the villagers' poaching activities . Nevertheless since the mid 1970's, a multitude of villages mysterousely filtered back, along the part's boundary with the River Rahad.

TRENDS

Wildlife has been disappearing from several areas in Northern Sudan during the past ten to 15 years. Human and livestock populations are increasing, creating more deamd on natural resources. Natural pastures are destroyed and very little is being done to keep human activities in harmony with ecological systems.

As mentioned above the Park is not a complete ecological unit because several wildlife species migrate

to wet season habitats outside its boundaries. Around 1967, agricultural development had been started in the areas used by the park's wildlife during the wet season. Both authorized (government approved) and unauthorized agricultural schemes are growing rapidly in this area used by the wildlife. Today there are at least 70 unlicenced schemes within the boundried of the park.

Mechanized farming both legal and illegal, has not only cleared vast areas around the park , but has contributed to the degradation of the park in other ways. Almost all groups of people living in the vicinity poach animals, especially during the wet season when there are no Rangers on duty (Whitney & Moghraby, 1982). The owners of the mechanized farms are said to supplement meat supplies of for their workers through this practice. The more professional poachers find a ready market for their kill in neighbouring small urban centres.

The areas surrounding the Park were relatively uninhabited until the begining of the 1970s when people from western Sudan and neighbouring west African countries, affected by drought conditions in their areas, moved into the Dinder region. About 20 villages exist now along the boundries of the Park. Inhabitants of these villages grow rain-fed crops such as sorghum and raise cattle,

sheep and camels along the Park boundries and often tress pass into the Park. They are also active in felling trees for charcoal production, which has become a very profitable product, because of its high demand in the cities of central and Northern Sudan. Villagers are also responsible for most of the poaching problems in the Park. Although one village was successfully moved in 1974 to a new location away from the Park, there are no similar plans to relocate the rest of the villages (Nimir & Hashim, 1975).

Perhaps more serious than these depredations has been the impact of nomadic livestock hards. Traditionally, great herds of sheep and camels have moved to the Butana grassland to the north of the Park in the wet season and have returned to the banks of the Rivers Dinder and Rahad, the Blue Nile and the White Nile during the dry season. Formely, the nomads grazed their animals as they moved over the extensive areas that are now occupied by mechanized farms or the Grand Rahad irrigation scheme bordering the Park to the northwest. But since the nomads can no longer find adequate grazing areas in these farmlands without risk of incurring heavy fines, they are increasingly bringing their animals into the Park itself, where the fines imposed by the courts for

trespassing are far lower than the fines for trespassing farmland. Table.1 presents the number of people arrested for illegal activities within the Park and numbers of herds of livestock found trespassing, between 1958 and 1982. The average number of animals in one herd is 800,200 and 50 for sheep, cattle and camels, respectively. Most of trespassing from 1975 to 1982 has been attributed to sheep (Nimir, 1983).

Livestock trespassing has increased about 126-fold during the period of 1970 to 1982, when compared to 1958 to 1970. Besides competing with wild animals for forage and water, domestic livestock are a source of infectious diseases to wild animals. This usually occurs towards the end of the dry season when wildlife concentrate around the few remaining water pools. Rinderpest outbreaks in 1970 and 1982 resulted in losses of hundreds of animals. An outbreak of anthrax was reported in 1974 in wild animals with heavy losses occurring among reed-buck and buffalo. In all of the above cases outbreaks were reported among livestock in areas around the park before symptoms started appearing in wild animals.

Park ecologists are still debating the impact of fire on the plant-wildlife system, but the consensus seems to be that the frequency of the fires, burning approximately 60 % of the total area each year, is degrading the environment

(Dasmann, 1972) . However a recent study shows that, in the burnt areas, almost 90 % of the regenerated growth is of Acacia seyal (Fadl, 1982). The latter seems to be more resistent to fire than the other two dominant species Balanites aegyptiaca and Combretum spp. The causes of fire in the area are many, ranging from those started by wild-honey gatherers and nomads burning the coarse grasses to allow more succulent younger shoots to grow, to the Park personnel themselves who use fire to clear routes through the dense stands of grass.

Several animal species which were reported to occur in the Park had already disappeared . The black rhino and the hippopotomus were last reported at the begining of the century (Harrison, 1953) crocodiles were abundant until in the 1940s, however an organised government [illegible] drastically reduced their numbers. The reported purpose of the crocodile croppin was to increase the Game Preservation Department's revenue. No crocodiles were reported in the Park during the 1950's and 1970 (Mohamed, Person. Comm) . However in 1983 one crocodile had been reported in one of the pools of the River Dinder.

The Lelwell hartebeest was last reported in the 1950 (Amir, 1983). The soemering gazelle, which was abundant until the 1960s, was completely exterminated from the Park by 1970 due to the vast expansion of

mechanized agriculture in the wet season habitat of this animal. A serious decrease in the numbers of tiang and waterbuck, amounting to 60 % and 30 % respectively, between 1970 and 1976 was also attributed to shrinkage of their wet season habitat and competition with livestock in their dry season habitat (Hashim & Himir, 1978).

As long as the habitats surrounding the Dinder National Park were undisturbed, the Park was able to support the large and varied big game population described above. However, the loss of the wet season habitats as well as increased livestock trespassing can be related to the lack of any landuse policy in the Dinder region. Decision makers admit now that serious mistakes were made by allowing large areas around the Park to be cultivated. In 1982 the area of the Park was increased by approximately 2500 km^2. The increase in area has been planned to incorporate some of the wet season habitats. However, this decision was not enforced in 1982 and the farmers were allowed to cultivate for one last season within this newly incorporated area, this practice was also allowed in 1983 providing that each farmer payed a 2500 £-fine. Adding to the problems of the Park is the lack of enough personnel, vehicles and funds to conduct patrol & management and necessary research. Also Natural changes in climate and vegetation succession can not be overlooked.

The Dinder National Park does not provide economic benefits for people of the Dinder region. A few temporary jobs are usually created each year following the end of the rainy season. Workers are recruited to open the seasonal roads and build the camp in the Park. Inhabitants of villages near the Park have been allowed to collect gum arabic from accacia trees in the park, but that practice was stopped in 1970.

Although Dinder National Park is the closest Africas park to Europe and the Middle East, tourists visiting the Park averaged 375 per year for the period from 1973 to 1978. The low number of tourists is mainly due to the poor infrastructure development in the country and the lack of national and international publicity about the Park.

INDICATORS

A combination of physical and social indicators are needed. However, the present Dinder group felt more comfortable in focusing on the physical system indicators, a situation that probably reflects the need to involve more input from the social sciences. Critical indicators to monitor change in the area of Dinder National Park would be found in the areas of ; soil, vegetation, animals, nomads, forest products and mechanized agriculture.

In attempting to think through some of these issues further and to define potential indicators, we constructed the very simple casual loop diagram (Fig. 3) that supplements the more elaborate systems model of the Dinder ecosystems (Fig. 4). As elaborated in ETIA-Sudan working paper No. 1, the meaning of an indicator is often ambiguous. In interpreting an indicator, much depends on the underlying philosophical prospective that is thought to bear on the indicator. Thus if one favours wildlife conservation as a primary value, then any environmental change that reduces animal habitat will be viewed as a negative development. If, on the other hand, one is concerned about providing food and other resources for people, then the conversion of grassland to mechanized agriculture is a positive blessing.

Indicators to monitor environmental change in the area of Dinder National Park include :

The amount of grassland as compared to the extent of open Savannah forest. This indicator can readily be monitored over a broad area through remote sensing images. Several possible pressure mechanisms can be envisaged as producing changes in the grassland/forest ratio, including charcoal cutting and burning and/or expansion of mechanized farming.

FIG.3. INTERACTION OF ENVIRONMENTAL INDICATORS OF DINDER PARK.

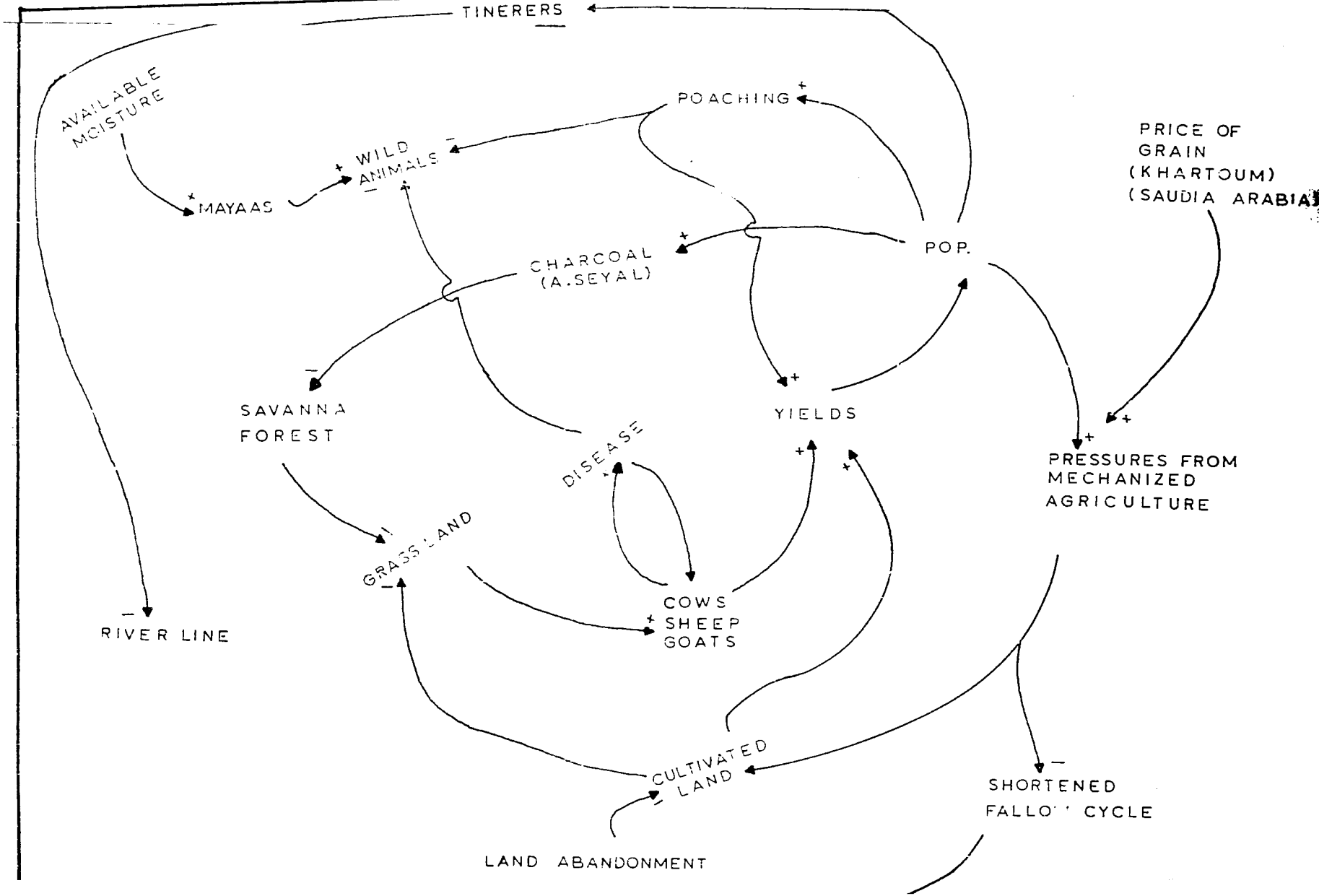

FIG.4. MODEL OF THE IMPACTS ON THE DINDER PARK ECOLOGICAL SYSTEM.(AFTER WHITNEY198

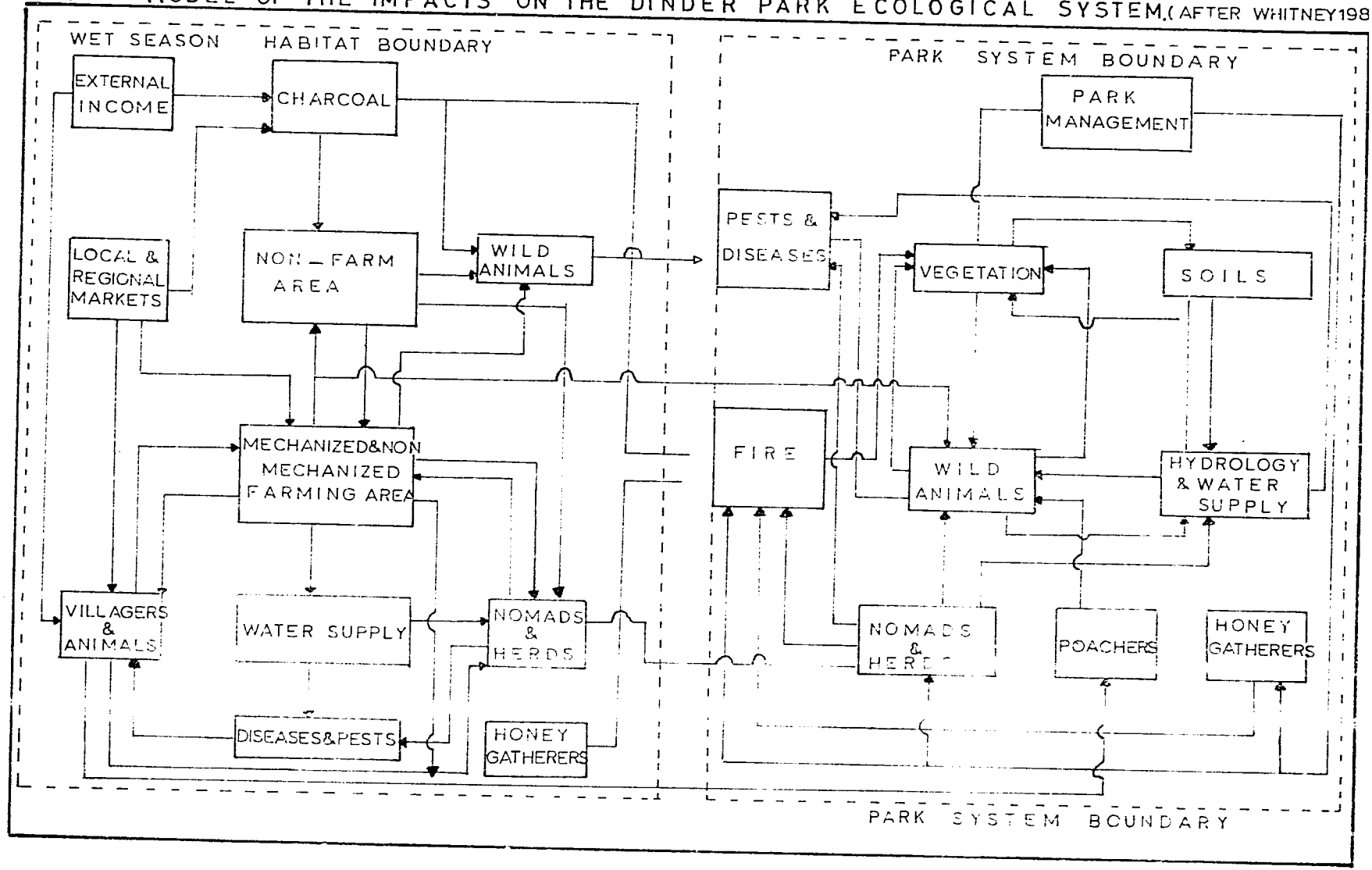

Although both of these processes might be due to changes in local population dynamics and distribution of local villages. In addition other important factors could be operating at a regional scale to promote change. Not least of these is likely to be the price of grain in the national market place.

Equally important are the feedback loops in the system that regulate the pace of change. Thus, changes that reduce soil fertility and encourage land abandonment act as a constraint on the expansion of cultivated land and promote the reestablishment of grassland and, presumably, the original savannah forest community.

The amount of (or percentage increase in) abandoned land would under these conditions be a useful indicator of the direction of environmental change.

The increase in *quella-quella* with agricultural expansion might also be a valuable indicator, as would some measure of the amount of charcoal production from the area.

The extent of burning, both in the Park and outside it, from one prespective would indicate the potential for substantial ecological change. It is also possible that fire (at least if maintained at or below certain levels)

might be important in the maintenance of the more open savannah forest ecosystem that is valuable to both domesticated and wild animals.

Other ecological change indicators are best represented by examples of tree regeneration, rather than the mature, canopy level specimens. A focus on species regeneration is seen as one of the most suitable measures of shift from one system state to the other. Tree regeneration is affected by fire, grazing and other human activities as well as changes in environmental conditions, such as rainfall.

The areas selected, to test ecological indicators, should be areas vulnerable to ecological transformation. Thus ecotones are of more interest than the core of ecologically stable environments, if the objective is to understand the stability and resilience characteristics of the system under consideration. Thus particular attention is drawn to the 20 km transitional zone, recently added to the park, an area that has long been under human exploitation.

Another example is readily available in the old "clearance" alignement of the Rahad canal. The area had been cleared in the late 1960s. Todate the only woody species regeneration is found in the mechanized agricultural plots within the area. This would compare nicely with the clearing of the protected airport strip near Gelagu

(abandoned for at least six years). Acacia seyal regeneration is quite dense in the latter. This probably reflects on the intensity of grazing , thickness of grass cover and fire.

The wildlife populations in the Park and adjacent areas may be an indicator of ecological change. Deterioration of the grazing and water resources, upon which the wildlife depend , should be reflected in fluctuation in animal numbers and herd structure. This, in turn, is linked not only to climatic fluctuations, but also to other negative feedback loops such as poaching pressure or diseases transmitted from livestock.

Another critical indicator is the change in the physical and biological state of the mayas through siltation, water residence time and use by wildlife as well as changes in the distribution of vegetation rings and clogged feeding inlets. All these are parameters which may seriously reduce food and water supplies for wild animals, especially in the dry season.

Other subtle indicators include :-

1- Appearance and extent of occurrence of new plant species and replacement of perenial grasses with annuals - indication loss of soil fertility and/or decreased rainfall eg the appearance, in several areas within the Park, of Calotropis procera.

2- Range and occurrence of species of wildlife eg a lion was reported to have been seen near Abu Hassheim, in Agust 1983. The extension of the lion's range could indicate the extent of wetseason habitat of wildlife (Elephant was hunted near Abu Hassheim in the 1930's - Mahana, person. commund. On the other hand it could indicate a shift in the feeding preference of some lions to domestic livestock.

3- Wildlife herd structure and rate of recruitment .

4- Number of herds and geographical extent of illegal livestock grazing.

5- Extent and frequency of wildlife diseases.

6- Numbers of poachers caught and the weight of dried meat bagged.

7- Number of visitors to the Park.

8- Expansion of the area of mechanized cultivation and size location and number of villages around the Park.

SUMMARY

The Dinder National Park is the only area, out of the seven chosen by the ETRA/LES project, to study indicators of change, that has received some form of protection of its living resources and their habitats. Furthermore the history of the area is relatively well known. Dinder is the largest National Park in the country and the oldest

in the Northern Sudan. It is world famous for reedbuck and birds of prey. Like many parts of the Sudan it has increasingly been subjected to pressures from human activities, especially after the droughts of the early 1970s.

The vegetation of the Park evolved under fire conditions. The dominant trees are resistant enough to fire to cope with annual burning. However, there seems to be an increase in annual grasses at the expense of perennials. Repeated burning seems to have also affected the riverine forests and the mayas.

Some of the wildlife species that have been recorded in the first half of the century have now completely disappeared. The total biomass of wildlife has generally decreased in the past ten years.

With the increase of human population, in the vicinity of the Park, the human activities multiplied several fold, since 1974. Mechanized cultivation and illegal grazing top the list of such activities. Furthermore agricultural plots in the Gedaref area and around the Park provide a good market for sun-dried game meat.

Thus Dinder National Park offeres a good opportunity to study environmental change and setting a monitoring system under somewhat "controlled" conditions.

REFERENCES

Berry, L. (1962). The nomadic environment in the North-Western Sudan. Sudan Philosophical Society.

Berry, L. and Whiteman, A.J. (1968). The Nile in the Sudan. Geog. Journ. 134 : 1-37 .

Dasman, W. P. (1972) Development and Management of the Dinder National Park and its wildlife. FAO, Rome No. TA 3113, pp. 61.

El Dai, E.H. (1982). Base-line information on some mayas of the Dinder National Park. M.Sc thesis U. of K. pp. 83.

Fadl, E. A. (1982) Ecological studies of Acacia seyal and Balanites Aegyptica in Dinder Nationa Park. M.Sc. thesis. U. of K. pp 86.

Harrison, G.L. (1953) Dinder 1905 Sudan wildlife and sport pp. 26.

Harrison, M.N. and Jakson, J.K. (1958) Ecological classification of the vegetation of the Sudan . Forest Bull. No. 2 kh. Sudan pp. 46.

Hashim, I. M. and Nimir, M.B. (1978) A new policy for protected wildlife areas in Northern Sudan. (In Arabic). The 1st Game Officers Conference Khartoum Sudan. pp. 13.

Holsworth, N.W. (1968) Report to the Government of Sudan on Dinder National Park. FAO Rome No. TA 2457 pp. 27

Nimir, M. B. and Hashim, I.H. (1975) . The conflicts of landuse practices in Dinder region (In Arabic) . The 1st agricultural conference Khartoum. pp. 24.

Nimir, M.B. (1983) Wildlife values and management in Northern Sudan. Ph.D thesis Colardo State University. Bortcolling, USA pp 228.

Tothill, J.D. (1948) Agriculture in the Sudan (not available for checking).

Whiteman, A.J. (1971). The Geology of the Sudan Republic. Clarendon Press Oxford pp 275.

Whitney, J.B. and Mogaraby A.I. el (1982). Dinder National Park, Sudan : Development Versus Preservation. Env. Consv. 10 : 248-250.

Table 1 Numbers of people arrested for illegal activities and numbers of herds of domestic livestock found trespassing in the Dinder National Park during the period from 1959 to 1982[1]

Years	Herds of trespassing livestock[2]	Collectors of gum arabic	Poachers	Entering the park without permit	Collectors of dom palm leaves and wild honey	Fishermen	Possession of unlicensed	Total
1958-1959	-	-	15	-	-	-	-	15
1959-1960	9	59	2	-	-	17	-	87
1960-1961	-	144	2	-	6	-	-	152
1961-1962	2	82	3	-	-	-	-	87
1962-1963	-	-	18	-	-	6	-	24
1963-1964	-	-	-	-	-	-	-	-
1964-1965	-	-	-	-	-	-	-	-
1965-1966	-	6	9	30	-	-	-	45
1966-1967	-	15	24	-	-	-	-	39
1967-1968	9	150	-	48	5	-	-	212
1968-1969	-	-	7	-	-	-	-	7
1969-1970	-	-	5	-	85	-	-	90
Total 1957-1970	20	456	85	78	96	23	0	758
1970-1971	33	-	-	-	-	-	-	33
1971-1972	2	-	46	-	1	-	-	49
1972-1973	64	-	58	-	11	-	12	145
1973-1974	135	11	65	15	4	33	-	252

Table 1 Cont./

Years	Herds of trespassing livestock[2]	Collectors of gum arabic	Poachers	Entering the park without permit	Collectors of dom palm leaves and wild honey	Fishermen	Possession of unlicensed	Total
1974-1975	155	-	24	26	29	-	11	245
1975-1976	229	-	10	27	36	29	19	350
1976-1977	270	-	10	8	36	29	-	353
1977-1978	181	-	18	6	-	10	-	215
1978-1979	241	-	26	14	-	44	8	333
1979-1980	432	-	22	15	15	10	19	513
1980-1981	422	-	55	96	-	27	25	625
1981-1982	365	8	33	28	18	4	16	472
Total 1970-1982	2529	19	367	235	150	175	110	3585

1) Table compiled from the Wildlife Administration records

2) The average numbers of animals in one herd are 800,200 and 50 for sheep cattle and camels, respectively. There is no detailed information on trespassing by different domestic animals, however most of the trespassing in 1975 to 1982 has been attributed to sheep.