62

PN-AAY-512
ISN = 52831

928457

BIOGAS PRODUCTION AND UTILIZATION

A Report To The Energy
Division Of The Ministry Of
Mining And Energy, Jamaica

June 8, 1981

Prepared by:

Jack Downey
Volunteers in Technical Assistance
3706 Rhode Island Avenue
Mt. Rainier, Maryland 20822

Best Available Document

CONTENTS

I. Introduction. 1
II. Estimating Gas Production . . . . . .
A. Parameters affecting gas production 1
B. Calculating gas production. 9
III. Gas Utilization . . . . . .
A. Scrubbing biogas. 11
B. Gas consumption rates 12
C. Cooking 13
D. Lighting. 23
E. Refrigeration 31
F. Electricity generation. 33
(i) engine parameters 33
(ii) diesel conversion. 35
(iii) gasoline engine conversion. 37
(iv) engine consumption rates 38
IV. Gas Connections and Distribution . . . . . .
1. Gas pressure. 40
2a. Types of gas pipes. 41
b. Water traps 41
c. Gas valves. 42
3. Flame arresters 44
4. Manometers and safety valves. 46
5. Sizing gas pipes. 47
V. Effluent Utilization. . . . . .
A. Effluent as fertilizer. 49
B. Other effluent uses 50
C. Public health hazards 51
VI. The Jamaican Biogas Program 51
VII. Appendices. . . . . .
Appendix 1 Summary of vaccine refrigerator testing.
2 Operation and performance of Kirloskar engines.
3 Use of gaseous fuel with Onan electric generating plants.
4 Equipment suppliers, Jamaica.
5 Methane and propane as auto fuels.
6 Processing cattle waste for recycling as animal feed.
7 Azolla propagation.
8 Fish farming in manure loaded ponds.
9 Effectiveness of excreta treatment in biogas plants.
10 Fish pond culture.
11 Scrubber plans

List of Figures and Their Source

Figure 1 - Bibliography Reference Number *3, pg 100
2 - #3, pg 102
3 - #3, pg 101
4 - #3, pg 103
5 - #4, pg 52
6 - #4, pg 52
7(A) - #4, pg 53
7(B) - #4, pg 54
8 - Khadi and Village Industries Commission
9 - #20
10 - #5
11 - #5
12 - #2, pg 10
13 - #4, pg 57
14 - #4, pg 58
15 - #4, pg 56
16 - #3, pg 63
17 - #3, pg 61
18 - #18, pg 34-35
19 - 23 - #3, pg 84-86
24 - #3, pg 20
25 - 28 - #3, pg 49-51
29 - #3, pg 48
30 - #18, pg 29
31 - 33 - #3, pg 51-53

*See Bibliography for title.

Table 1 - Bibliography Reference Number 12, pg 45
2 - #3, pg 69
3 - #12, pg 66
4 - #7, pg 39
5 - calculated values
6 - #17, pg 43
7 - #12, pg 45
8 A,B,C - #8, pg 337-338
9 - pg 335-336
10 - #8, pg 175
11 - calculated values
12 - #3, pg 87

OLADE

Jamaica Biogas Project

I. Introduction

Volunteers in Technical Assistance (VITA) was asked by the Energy Division of the Ministry of Mining and Energy (ED/MME) to provide information on utilizing biogas produced by digesters built with funds from OLADE. These digesters are small (6-12m^3) farm-sized units, of different designs--a batch, fixed-dome and plug-flow systems. One other larger model, a 67m^3 fixed dome unit, was built at Elim and is also included in this report.

This report will cover three basic areas:

(1) How to estimate gas production and an estimate of available gas at each site.
(2) How to utilize biogas for cooking, lighting, electricity generation, and refrigeration.
(3) Recommendations for each site.

An attempt will be made, in each section, to give not only the calculated value, but also how to calculate the values in general.

I. Estimating Gas Production

A. Parameters

The quantity of gas produced by a biodigester varies widely, depending on temperature, retention time, loading rate, C/N ratio, pH and type of waste material added. Biodigesters of the same design can, therefore, have varying gas production rates in different locales. It's important to thoroughly understand the theory of anaerobic fermentation in order to maximize gas production.

In most cases, mesophilic digestion is best. Mesophilic bacteria are not as sensitive to temperature changes as thermophilic bacteria, working best between 21 and 40°C. Optimum is 30-35°C, which is quite possible in Jamaica's hot, tropical climate. Thermophilic bacteria work best between 40 and 60°C, which would require additional heat input, and therefore is not recommended. Figure 1 shows how gas production varies as a function of slurry temperature. (see next page)

The retention time is the average number of days a unit volume of slurry stays in the digester. Since total gas production is a function of retention time, longer retention times assure maximum gas production from the waste material added. This must be balanced, however, with the size of the biodigester. Longer retention times mean larger digesters, which may not be economical. The length of the retention time chosen should reflect the economics of the individual situation to determine the maximum gas production for the minimum possible investment. In general, retention times corresponding with 85%-90% of total gas production are recommended. For example, this would mean a 30 day retention time for pig manure (see figures 2 and 3).

The loading rate refers to the weight of volatile solids (VS) loaded each day into the digester divided by the available volume of the digester. This is an important parameter for two reasons. One, if the loading rate is too low, the

Figure 1

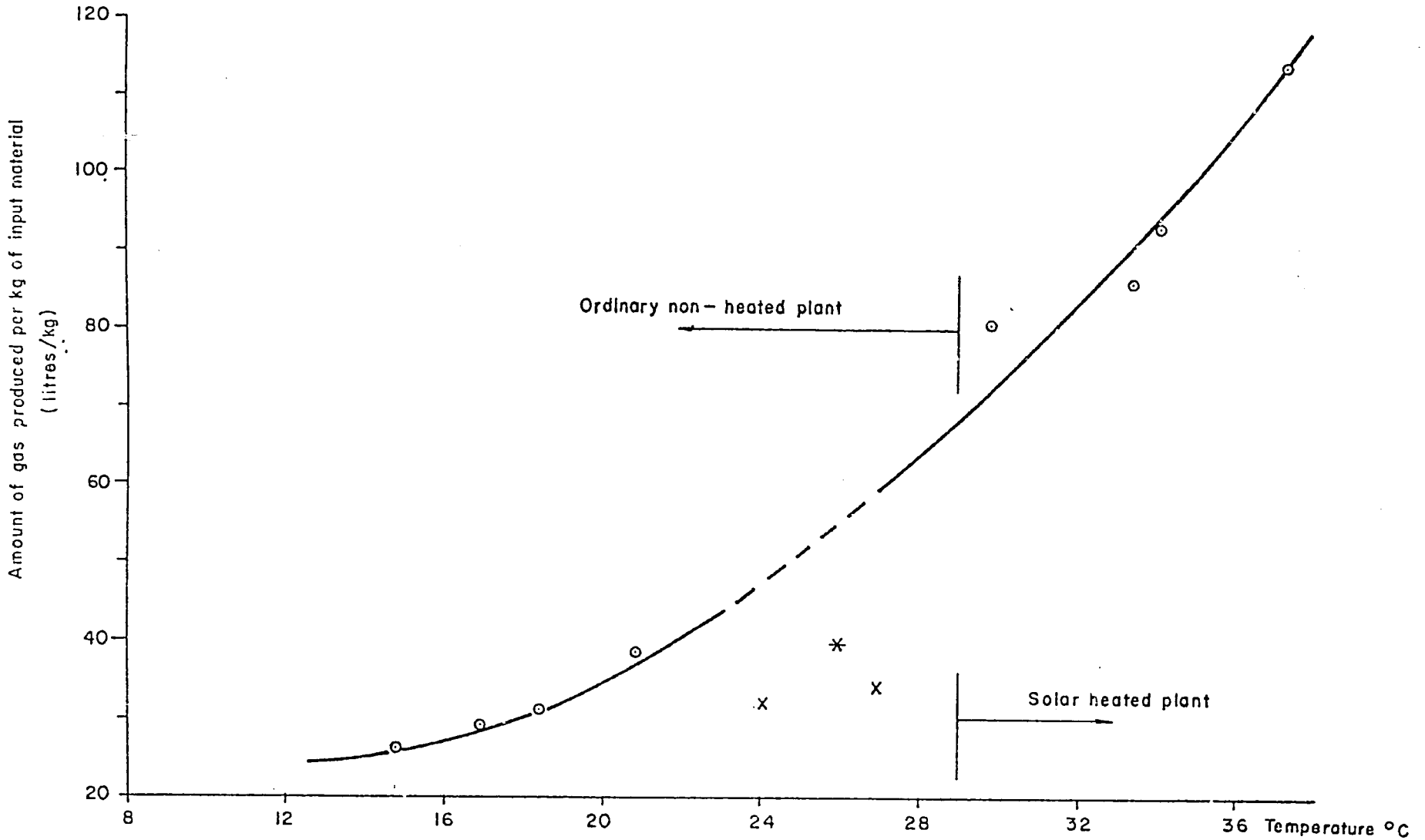

Retention time ≃ 55 days
Retention time of solar heated plant ≃ 15...18 days
Percentage of total Solids = 8...10 %

○ Figures reported from India (Ajitmal)
X Figures reported from Nepal
✳ Figure reported from United States of America

Gas production as a function of slurry temperature

Figure 2

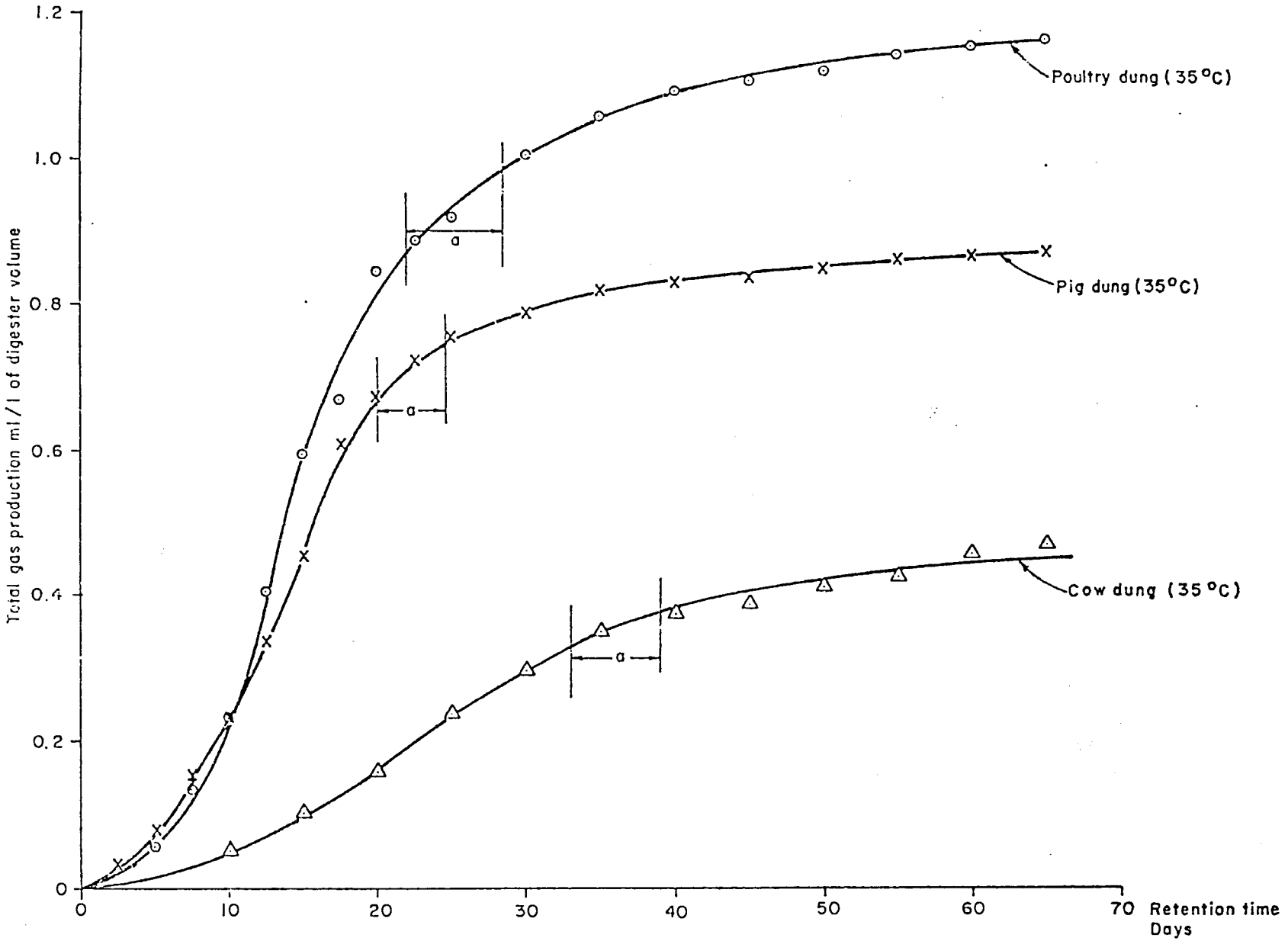

For gas production equaling 75···85 % of the maximum value, the corresponding retention times are as follows (region 'a' on the curves) :–

22 ... 29 days for poultry dung
20 ... 25 days for pig dung
33 ... 39 days for cow dung

Total gas production as a function of retention time (Republic of Korea)

Figure 3

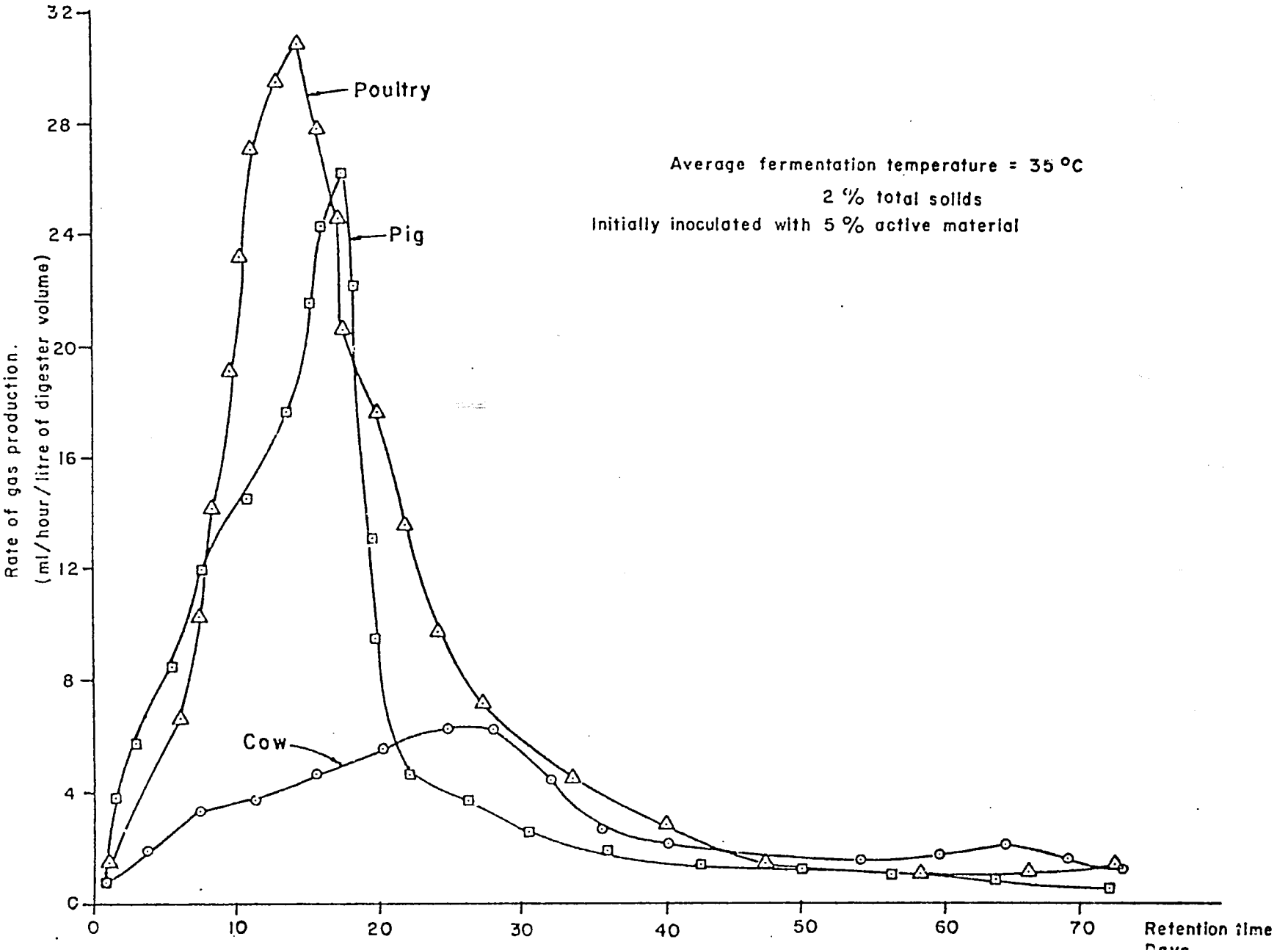

Rate of gas production as a function of retention time (Republic of Korea)

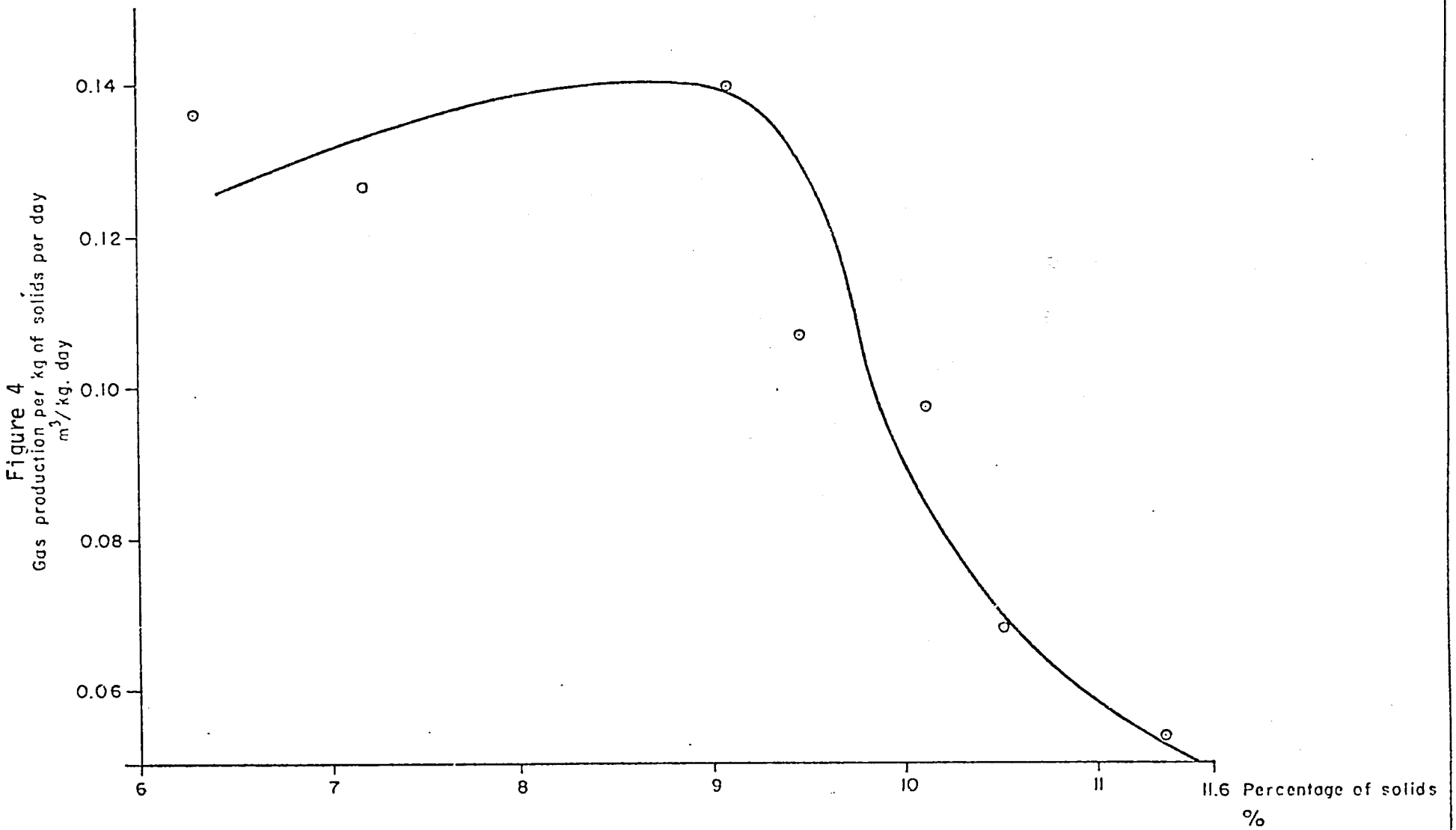

Figure 88. Gas production from cow dung as a function of the percentage of solids (India)

digester will be under utilized to it's fullest capacity. The second reason is, if the loading rate is too high, the acid forming bacteria can break the waste material down more quickly into volatile acids than the methane forming bacteria can convert it into methane. This causes a build-up of acid, lowers the pH, and can shut down methane production. Figure 4 shows this graphically. In general, loading rates are in the range of 1.6 to 2.4 kg VS per m^3 digester volume per day. Using the $6m^3$ plug-flow digesters at Porus and Sanguinetti as examples, the loading rates per day can be calculated:

1. (a) Volume: $6.0m^3$

   (b) Effective slurry Volume: $5.1m^3$ (85% of total volume)

2. Assume standard loading rate: 1.6-2.4 kg VS/m^3 digester/day

3. Therefore: (a) 5.1^3 X 1.6 kg VS/day/m^3 = 8.16 kg VS

   (b) $5.1m^3$ X 2.4 kg VS/day/m^3 = 12.24 kg VS

   (c) Daily VS input = 8.16-12.24 kg VS

4. For a 30 day retention time and $5.1m^3$ effective volume, the daily slurry input would be 170 liters ($5.1m^3 \div 30$).

5. Assume total solids (TS) = 20% of manure,

   (a) VS = 85% of TS (80% for cows) /7/

   (b) Then: $$\text{Manure} = \frac{VS}{0.85 \times 0.20} = \frac{8.16 \rightarrow 12.24 \text{ kg/day}}{0.85 \times 0.20}$$

   Manure = 48-72 kg/day

   (c) Therefore, the daily input of slurry would contain:
   Pig manure - 48-72 kg
   Water - 122-98 kg
   Total input = 170 liters slurry
   (N.B. In the above calculations, mass and volume units are interchangeable since the density of water = 1.0 and density of pig manure $\approx$ 1.0)

The carbon to nitrogen ratio (C/N) is an important parameter to keep in mind. Methane fermentation proceeds most rapidly at a C/N ration of 25-30 to one. Table 1 contains the C/N ratios of some common waste materials. Pig manure, although not shown in this table, has a C/N ratio of about 14./8/ Therefore, a source of carbon must be added to raise the C/N ratio to optimal levels. Table 2 shows proportions of plant waste that can be added to accomplish this.

TABLE 1

roximate Nitrogen Content and C/N Ratios by Weight
Various Waste Materials (a) (Dry-Weight Basis)

ial	N (%)(b)	C/N
al Wastes		
ine	15-18	0.8
ood	10-14	3
sh scraps	6.5-10	5.1(c)
ixed slaughterhouse wastes	7-10	2
oultry manure	6.3	–
heep manure	3.8	–
g manure	3.8	–
orse manure	2.3	25(c)
ow manure	1.7	18(c)
armyard manure (average)	2.15	14
Soil	5.5-6.5	6-10
Wastes		
oung grass clippings (hay)	4.0	12
rass clippings (average mixed)	2.4	19
urslane	4.5	8
maranthus	3.6	11
ocksfoot	2.6	19
ucerne	2.4-3.0	16-20
eaweed	1.9	19
ut straw	1.1	48
lax waste (phormium)	1.0	58
Vheat straw	0.3	128
otted sawdust	0.25	208
aw sawdust	0.1	511
ehold Wastes		
aw garbage	2.2	25
read	2.1	–
otato tops	1.5	25
aper	nil	–

urce: Gotaas (1956)[18] and Fry and Merrill (1973).[4]
tal nitrogen.
nlignin carbon.

TABLE 2

Proportions of different materials to be put into the digester

Material	*Propor*
Fresh human waste/dry straw (wheat stalks)	1.75
Fresh pig waste/dry straw (wheat stalks)	4.55
Fresh human waste/dry rice stalks	1. 4
Fresh pig waste/dry rice stalks	3.65
Fresh human waste/corn stalks	1.13
Fresh pig waste/corn stalks	2.95
Fresh human waste/fallen leaves	0.85
Fresh pig waste/fallen leaves	2.22
Fresh human waste/soya bean stalks	0.45
Fresh pig waste/soya bean stalks	1.1
Fresh human waste/wild green grass, including water weeds	1
Fresh pig waste/wild green grass, including water weeds	1
Fresh human waste/fresh pig waste/dry rice stalks	1: 1
Fresh human waste/fresh pig waste/dry wheat stalks	1: 2
Fresh human waste/fresh pig waste/dry corn stalks	3: 4
Fresh human waste/fresh pig waste/green grass, including weeds	1:10

Source: Information made available by the Chinese authorities the members of the Interregional Biogas Study Tour China from 1 to 21 September 1979, organized by t United Nations.

Note: The C/N ratios of sheep, cow and horse dung fall in t optimum range (20 to 25:1), hence they may be digest alone or with any of the above material mix.

Methane generation is most efficient when the pH is kept between 7.0 and 8.5. This can be a problem at times. The acid forming bacteria, which produce volatile acids, can tolerate a low pH level but the methane forming bacteria stop working altogether below pH 5.5. They work best between 7.0 and 8.5. If the pH falls, there are several to raise it to the optimal level. One way is to add a small bit of lime (carbon carbonate --about 0.2 to 6.3 kg per m^3 digester volume. Other less common ways include: adding sodium, calcuim, magnesium, or ammonium bicarbonate; recirculating scrubbed biogas (with carbon dioxide removed) to "pull out" more carbon dioxide from the slurry, or lowering the C/N ratio.

The type of waste material you use will, to a large extent, determine the amount of gas produced. Table 3 shows gas production for common sources of waste. Keep in mind that these are average values and can vary significantly from country to country. The size of the animal also has great effect on manure production.

TABLE 3

Yield of Biogas from Various Waste Materials[a]

Raw Materials	Biogas Production per Unit Weight of Dry Solids		Temperature		CH_4 Content in Gas (%)	Fermentation Time (Days)	Reference
	ft^3/lb	m^3/kg	°F	°C			
Cow dung	5.3	0.33	–	–	–	–	10
Cattle manure	5	0.31	–	–	–	–	3
Cattle manure (India)	3.6-8.0	0.23-0.50	52-88	11.1-31.1	–	–	11
Cattle manure (Germany)	3.1-4.7	0.20-0.29	60-63	15.5-17.3	–	–	11
Beef manure	13.7[b]	0.86[b]	95	34.6	58	10	12
Beef manure	17.7	1.11	95	34.6	57	10	12
Chicken manure	5.0[c]	0.31[c]	99	37.3	60	30	13
Poultry manure	7.3-3.6[f]	0.46-0.54[f]	90.5	32.6	58	10-15	14
Poultry manure	8.9[c]	0.56[c]	123	50.6	69	9	20
Swine manure[d] [e]	11.1-12.2	0.69-0.76	90.5	32.6	58-60	10-15	14
Swine manure[d] [e]	7.9	0.49	91	32.9	61	10	15
Swine manure	16.3	1.02	95	34.6	68	20	15
Sheep manure[d]	5.9-9.7	0.37-0.61	–	–	64	20	15
Forage leaves	8	0.5	–	–	–	29	16
Sugar beet leaves	8	0.5	–	–	–	14	16
Algae	5.1	0.32	113-122	45-50	–	11-20	21
Night soil	6	0.38	68-79	20-26.2	–	21	17

[a] Some figures have been rounded to the nearest tenth.
[b] Based on total solids.
[c] Based on volatile solids fed.
[d] Includes both feces and urine.
[e] Animals on growing and finishing rations.
[f] Based on volatile solids destroyed. On the basis of conversion efficiencies given in Ref. 13, these results may be expressed as 4.0-4.7 ft^3/lb dry solids added, or 0.26-0.30 m^3/kg.

Table 4 shows the total manure production of different sized pigs on a farm in South Africa /7/. It's interesting to note that while manure production varied, the ratio of manure to the weight of the pig remained fairly constant at about 1.10. This may assist you in estimating manure production from the size of the pig.

TABLE 4

Hog Weight	Total Manure Lbs/Day	Feces	Urine	Ratio Manure/ Hog Wt.
40-80	5.6	2.7	2.9	1:11
80-120	11.5	5.4	6.1	1:9
120-160	14.6	6.5	8.1	1:10
160-200	17.6	8.5	9.1	1:10

B. Calculating Gas Production

Gas production depends on all the factors mentioned previously. While it's very difficult to estimate the exact gas production, there are general "rules of thumb" which can be used. A generally accepted value for gas production is 0.4-0.5m^3/kg of dry volatile solids added, using animal manures and plant waste material as feed material with retention times of 10-20 days (NAS). Calculated values for suggested loading rates of volatile solids for each of the OLADE digesters and estimated gas production are shown below in Table 5.

TABLE 5

INPUT REQUIREMENTS FOR OLADE DIGESTERS WITH ESTIMATED TOTAL GAS PRODUCTION

(next page)

TABLE 5

Input Requirements for OLADE Digesters With Estimated Total Gas Production

Site	Digester Type	Effective (85%) Digester Volume (m3)	VS/Day (kg/day)	INPUT Wet Manure Per Day (kg/day)	Estimated Number (3) of Pigs/Cows Required
Porus	Plug Flow	5.1	8.16 - 12.2	48 - 72	19 - 29
Sanguinetti	Plug Flow	5.1	8.16 - 12.2	48 - 72	19 - 29
Point Hill	2 Batch Units	@ 7.2	@ 11.5 - 17.3	@ 68 - 102	@ 27 - 41
Ducketts	Fixed Dome	10.2	16.3 - 24.5	96 - 144	38 - 58
Kendal	Fixed Dome	10.2	16.3 - 24.5	96 - 144	38 - 58
Roehampton	Fixed Dome	10.2	16.3 - 24.5	102 - 153	10 - 15 cows
Ezim	2 Fixed Domes	@ 57.0	@ 91.2 - 137	@ 536 - 804	@ 214 - 322

Water (kg/day)	Slurry (1) (l/day)	Expected Total Gas (2) Production (m^3/day)
122 - 98	170	3.3 - 6.1
122 - 98	170	3.3 - 6.1
@ 172 - 138	@ 240	@ 4.6 - 8.7
244 - 196	340	6.5 - 12.3
244 - 196	340	6.5 - 12.3
244 - 196	340	6.5 - 12.3
@ 1364 - 1096	@ 1900	@ 36.5 - 68.5

(1) Retention time is taken to be 30 days.

(2) Gas production = VS added/day X 0.4 - 0.5m^3 gas/kg VS.

(3) For estimating, the following figures were used and represent manure production per day for adult animals /3/
cows: 10 kg dung/day
pigs: 2.5 kg dung/day

In practice, manure production can vary significantly from place to place and country to country.

It's important to keep in mind that the calculated gas yield is tentative and will vary depending on the local conditions.

In the following section, when discussing applicances operating on biogas, the lower gas yield figure will be used.

I. Gas Utilization

A. Scrubbing the Biogas

Biogas is a mixture of primarily methane gas and carbon dioxide, with nitrogen, hydrogen, hydrogen sulphide, and water vapour in very small amounts. Table 6 shows the percentage composition of biogas from three countries. You can expect the composition of biogas in Jamaica to be about 60-65% methane and 30-35% carbon dioxide with the remainder divided between the other gases mentioned in Table 6. Water vapour will also be present, depending on the temperature of the slurry and gas. You may wish to remove some of these gases from the biogas so that what you have left is nearly pure methane. But the reason for removal should be good enough to make the investment worthwhile.

TABLE 6

Percentage Composition of biogas production from farmyard wastes

		USA	*Germany*	*India*
CH_4	Methane	54-70	53.8-62	35-70
CO_2	Carbon Dioxide	45-27	44.7-37	55-29
N_2	Nitrogen	5.3	1.0	1.0
H_2	Hydrogen	1-10	0.3	1-10
Co	Carbon Monoxide	0.1	0.1	0.1
O	Oxygen	0.1	0.1	0.1
H_2S	Hydrogen Sulphide	Trace	Trace	Trace

Carbon dioxide and nitrogen gas are inert; they do not enter into any combustion reactions. In effect, they dilute the energy content (Biogas contains about 600 BTU/ft^3; methane about 1000 BTU/ft^3), and when we heat biogas, i.e. cooking with it, we also have to heat them up which takes away from the heat of the reaction. If you are storing the biogas, eliminating these inert gases will decrease the size of

the storage facility, and therefore will be less expensive. The money you save in decreased storage costs, however, should be greater than the expense of a scrubber. In general, when biogas is used for cooking, lighting, or refrigeration a scrubber is not necessary. The energy content of the biogas will be lower than pure methane gas but for small-scale use it is sufficient.

Carbon dioxide and hydrogen sulphide removal is a continuing source of controversy when biogas is used in engines: some people recommend removal and others declare that it does not matter. Carbon dioxide dilution of the biogas will decrease the amount of energy available per unit volume. For example, two volumes of a biogas of 50% methane--50% carbon dioxide contains the same amount of energy as 100% methan But in a study done by Neyeloff and Gunkel in 1974, the 50% CH_4-50% CO_2 mixture produced 54% less power. In other words, it takes 3.7 volumes of a 50% CH_4-50% CO_2 mixture to equal the performance of 1 volume of 100% CH_4.

Hydrogen sulphide, normally less than 1% of biogas, is a gas which smells like rotte eggs. It can be highly corrosive in an engine and can acidify the lubricating oil. It works in the following manner:

(1) When it is burned (along with the biogas) most of it is converted to sulfur
$2H_2S + O_2 + \text{heat} \rightarrow 2H_2O + 2S$

(2) Some of the hydrogen sulphide is converted to sulfur dioxide, especially wh there is an excess of air:
$2H_2S + 3O_2 \rightarrow 2H_2O + 2SO_2$

(3) Sulphur dioxide, by itself, is only mildly toxic but problems arise when it combines with the water:
$SO_2 + H_2O \rightarrow H_2SO_3$

(4) Sulphurous acid is then converted:
$2H_2SO_3 + O_2 \rightarrow H_2SO_4$

This sulphuric acid is the corrosive element which causes rusting of metal gas distr bution pipes and in engines. Keep in mind that concentrations of hydrogen sulphide normally less than 0.1% in biogas. And some people have operated engines on unscrub biogas with no problems, although power is decreased due to the dilution effect of carbon dioxide. The OLADE biogas program presents an excellent opportunity to test this hypothesis. The biodigesters at Porus and Point Hill will produce gas for elec tricity generation. One of the generators could be operated on raw biogas and the other on scrubbed biogas. Performance data of the generators could be collected and compared. Engine overhauls done after 200-300 hours of operation would spot any cor rosion of the engine due to hydrogen sulphide before severe damage to the engine occ Plans for a scrubber unit are contained in Appendix 11.

B. Gas Consumption Rates

The quantities of biogas required for gas burning appliances are listed in Table Keep in mind that these are average values and may vary somewhat, depending on th specific type of appliance used. For example, a Hotpoint (typical American mode stove with four 2 3/8" diameter burners consumes .48m^3 biogas/hour (for biogas o 600 BTU/ft^3--60% CH_4) per burner. The oven (13½" X 20" X 20") consumes .89m^3 bi gas/hour. These values are slightly higher than what you would expect from the table. If an oven is being used, the figure of 0.34-0.42m^3 biogas/person/day fr the table may increase.

TABLE 7

Quantities of Biogas Required for a Specific Application[a]

Use	Specification	Quantity of Gas Required ft^3/hr	Quantity of Gas Required m^3/hr	Reference No.
Cooking	2" burner	11.5	0.33	5
	4" burner	16.5	0.47	5
	6" burner	22.5	0.64	5
	2"-4" burner	8-16	0.23-0.45	6
	per person/day	12-15+	0.34-0.42+	6
	per person/day	12+	0.34+	7
Gas lighting	per lamp of 100 candle power	4.5	0.13	7
	per mantle	2.5	0.07	6
	per mantle	2.5-3.0	0.07-0.08	5
	2 mantle lamp	5	0.14	5
	3 mantle lamp	6	0.17	5
Gasoline or diesel engine[b]	converted to biogas, per hp	16-18	0.45-0.51	6
Refrigerator	per ft^3 capacity	1	0.028	5
	per ft^3 capacity	1.2	0.034	6
Incubator	per ft^3 capacity	0.45-0.6	0.013-0.017	5
	per ft^3 capacity	0.5-0.7	0.014-0.020	6
Gasoline	1 liter	47-66[c]	1.33-1.87[c]	6
Diesel fuel	1 liter	53-73[c]	1.50-2.07[c]	6
Boiling water	1 liter	3.9[d]	0.11[d]	5

[a] Adapted from Singh (1972).[4]
[b] Based on 25 percent efficiency.
[c] Absolute volume of biogas needed to provide energy equivalent of 1 liter of fuel.
[d] Absolute volume of biogas needed to boil off 1 liter of water.

C. Cooking with Biogas

Worldwide, cooking with biogas is the primary use of the gas. Biogas can be used like any other gas--natural gas, butane or propane. Since all gases have slightly different characteristics, correctly designed stoves are needed for each type of gas for maximum efficiency.

There are a few basic rules for proper design of a gas stove /3/:

1. Air must be thoroughly mixed with the gas before it reaches the flame ports. The air should enter near the gas jet, ideally with a venturi attached (see Figure 9).

2. The total area of the flame ports should be between 80 and 200 times the area of the gas jet.

3. The distance from the flame ports to the surface of the cooking pot should be 1-1¼", assuming a gas pressure of 3-3.5" water gauge.

4. Any supports for the burner should not prevent air from circulating to the flame.

5. To allow cross-lighting from flame port to the next, the distance between plame ports should not exceed 0.75 inches.

For a typical 0.45m3 per hour stove, the dimensions should be approximately/3/:

Jet size:	2.25mm diameter
Area of jet:	3.98mm2
Flame port size:	6.0mm diameter
Number of ports:	20
Total area of ports:	565mm2
Ratio of jet area to flame port area:	1:142
Length of gas mixing pipe:	20mm
Diameter of gas mixing pipe:	20mm

There are many simple biogas stoves designs. Figures 5-9 show several clay and metal stoves that can be easily manufactured or are commercially available.

Existing gas stoves, available locally in Jamaica, can be easily converted to biogas operation, if you do not care to make your own. A common gas range with an attached small oven, e.g. Bel-Air, seems to be popular and available locally. The common gas range utilizes what is known as an atmospheric mixer (Figure 9). /20/ A jet of fuel gas is directed into the throat of the venturi, causing air to be sucked into the mixing chamber. The resulting air/gas mixture flows through a pipe to the burne Specifically:

-- The atmospheric mixer operates on low pressure gas. Entry pressures, at the valve inlet, of 3-3.5" water gauge are sufficient. The volume of air sucked in usually amounts to 40-60% of the air required to complete combustion.

-- The air register is adjustable and is mounted on the face of the venturi entry cone.

-- The gas jet nozzle is positioned to direct the expanding stream of gas into the throat of the venturi so that it just barely touches the sides of the throat at full gas flow. The diameter of the nozzle depends on the maximum gas requirements of the burner.

With commercial stoves, one simple adjustment is needed to modify it to burn biogas -- enlarging the diameter of the jet nozzle orifice. The amount of enlargement depends on two things: the amount of methane contained in the biogas and the kind of gas (natural, propane, or butane gas) the appliance is designed for. Table 8 shows the amount of enlargement required:

Figure 5

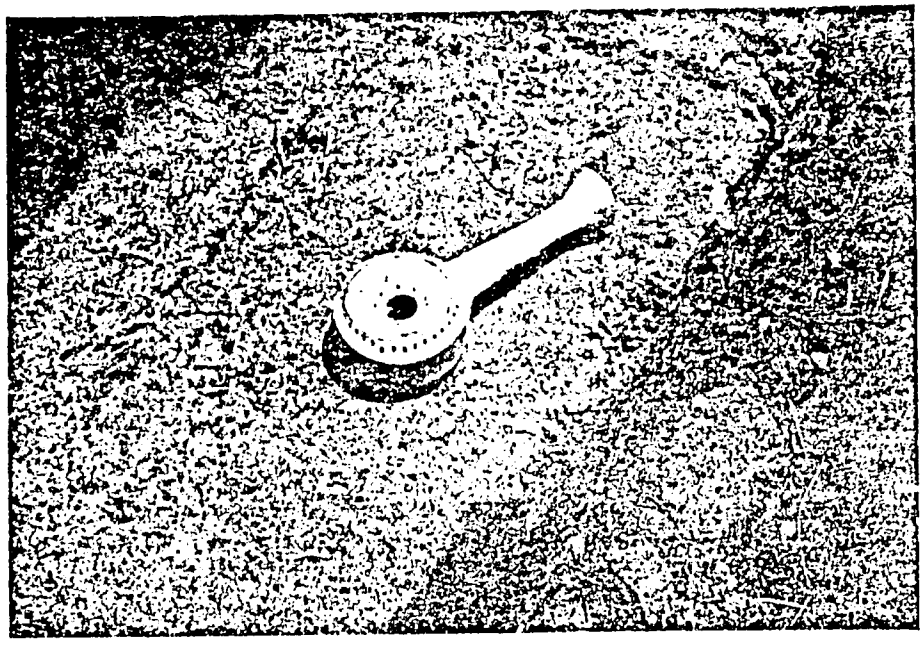

A locally made clay biogas burner (Anshi People's Commune, Zhejiang Province).

Figure 6

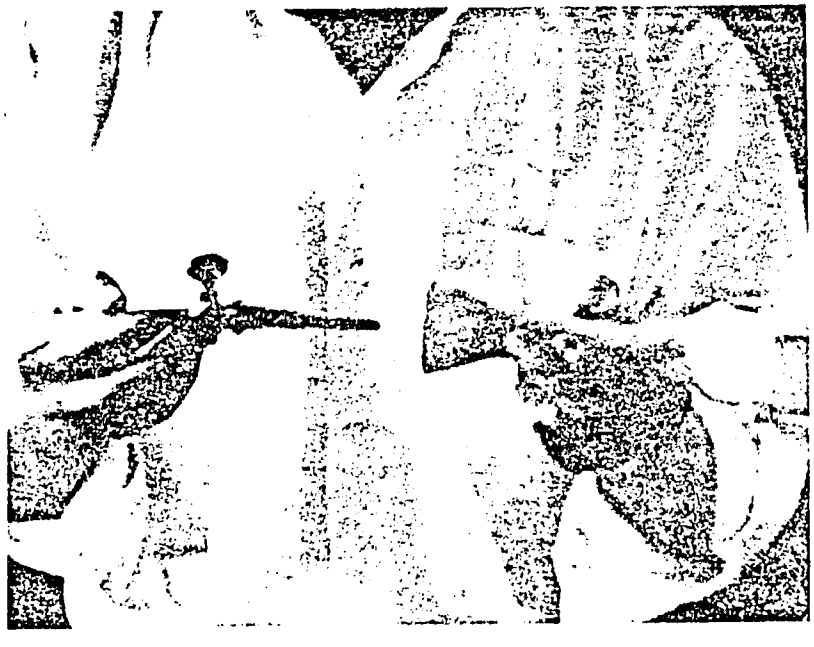

Showing the nozzle which fits into the clay biogas burner of Plate 30.

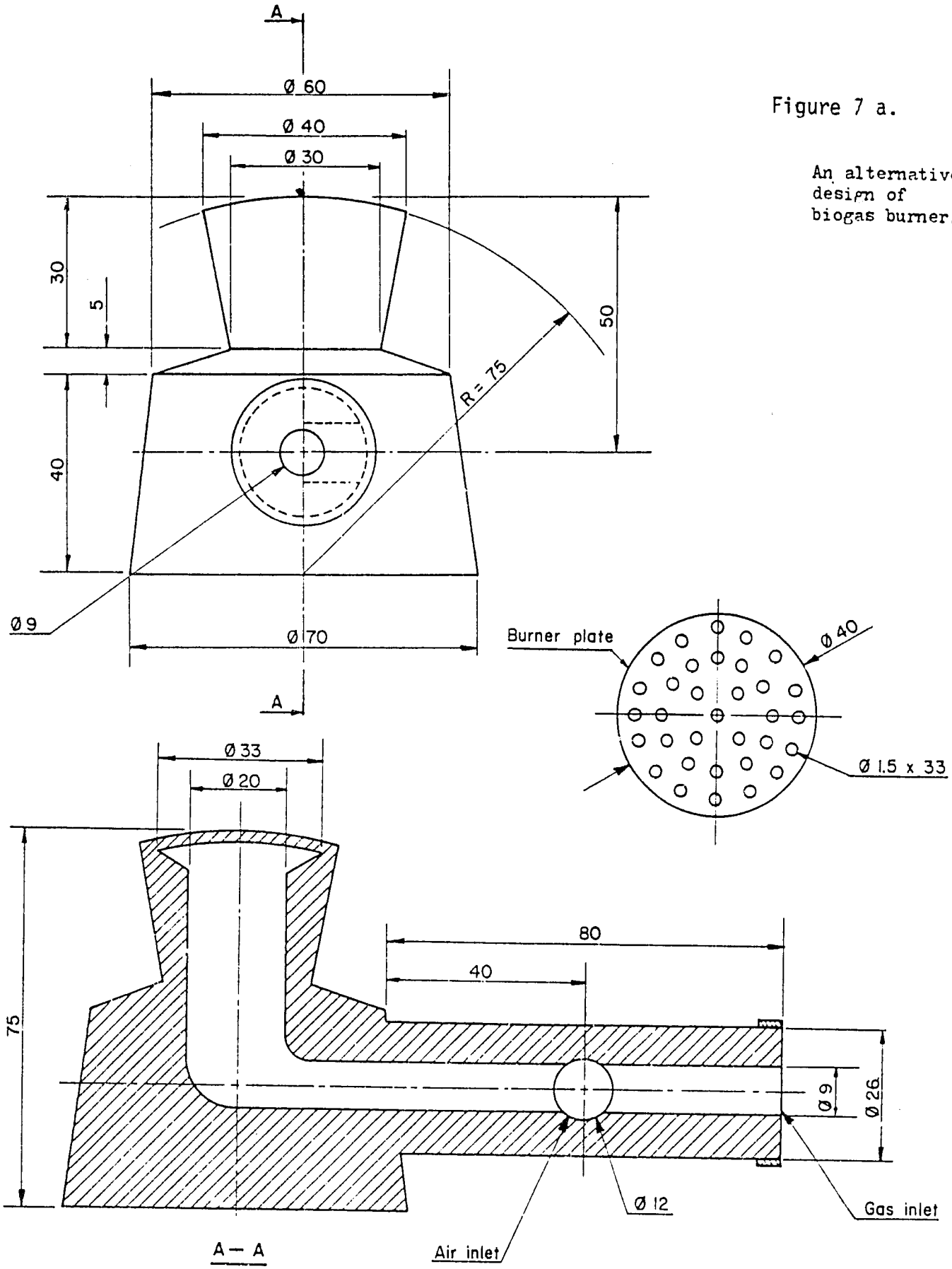

Figure 7 a.

An alternative design of biogas burner.

Figure 7 b.

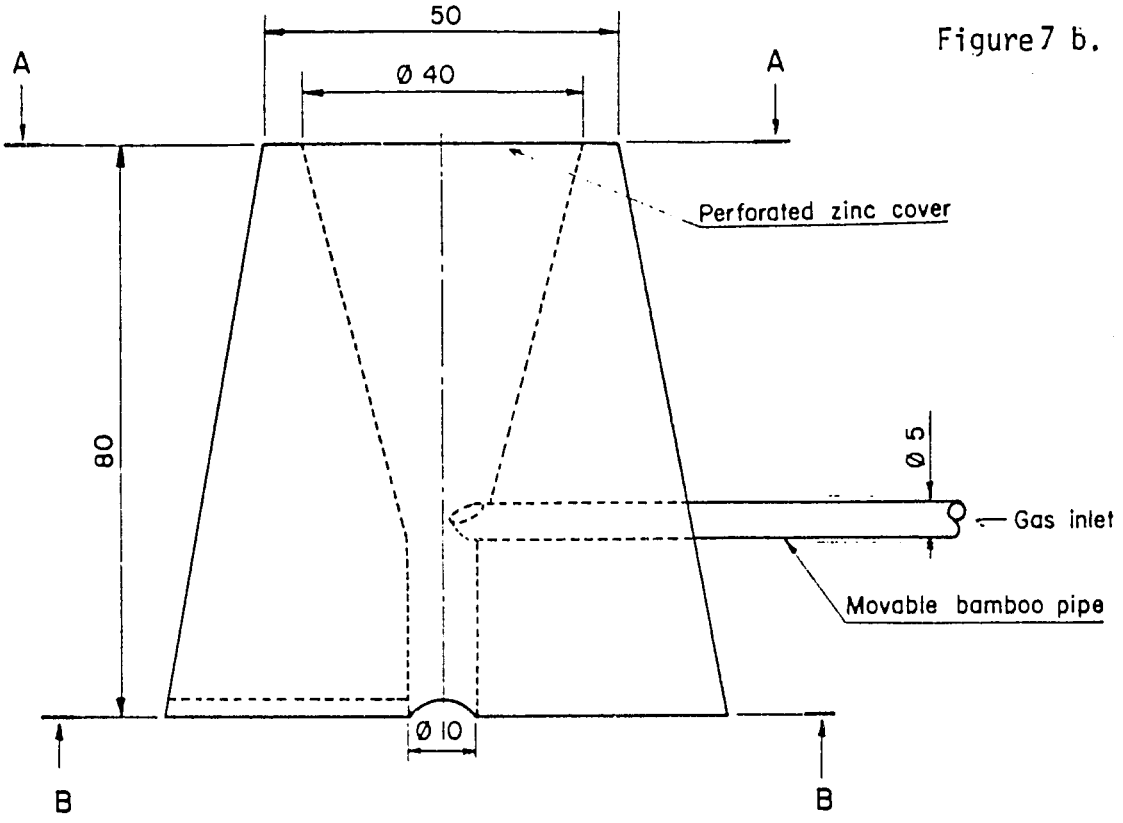

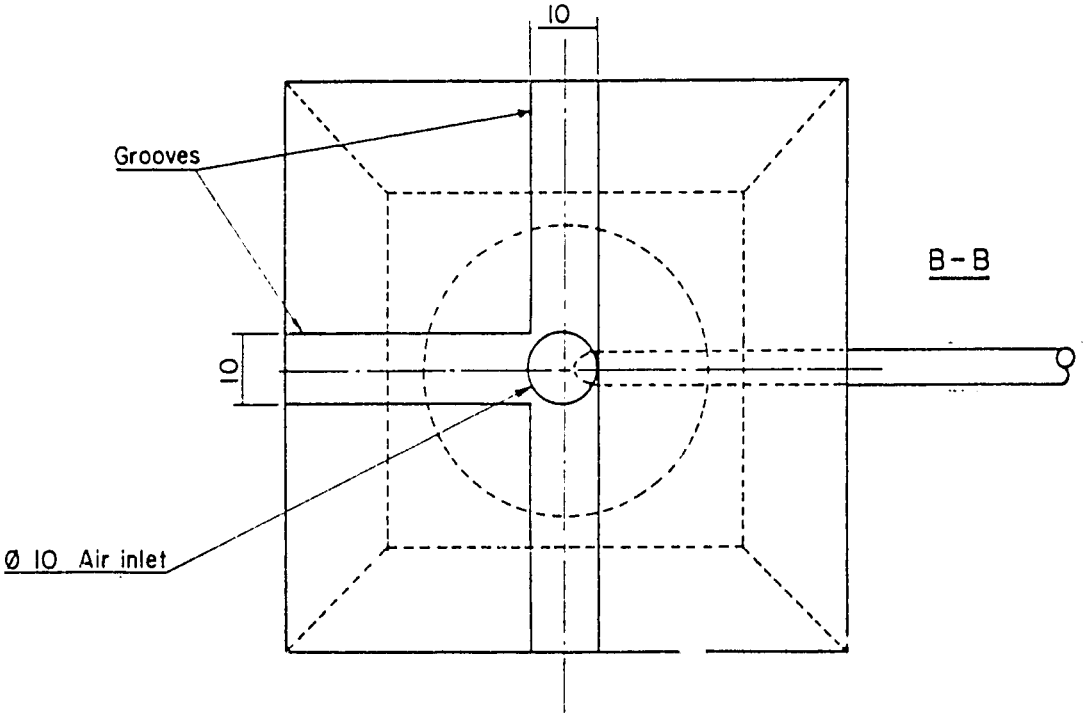

Details of a simple, home-made biogas burner

Figure 8

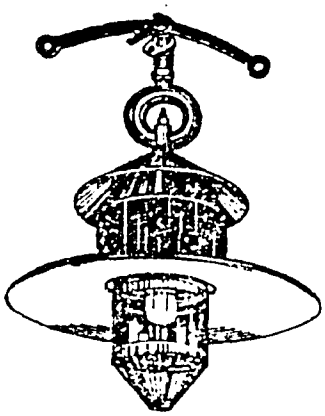

GOBAR GAS LAMP: 100 C.P.

This lamp with 100 C.P. mantle consumes 110 Litres (4.5 Cft.) Gas per hour.

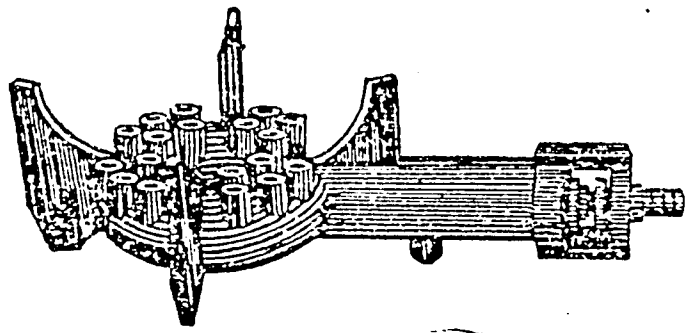

GOBAR GAS BURNER

1130 Litres/Hr.

This burner uses 1130 Litres/Hr. (40 Cft./Hr.) of Gobar Gas. This burner is useful for community kitchen of hostels and institutions. It has also been used for industrial heating.

GOBAR GAS

APPLIANCES

FOR

- SAFETY
- DURABILITY
- EFFICIENCY
- ECONOMY

&

- NON SMOKY

GOBAR GAS DELUX BURNER

225 Litres/Hr.

This is the smallest of Gobargas burners using 225 Litres/Hr. (8 Cft./Hr.) of Gobargas. It burns with an intensity equal to half that of a kerosene pressure stove. Bigger size 450 Litres (16 Cft.) per hour also available.

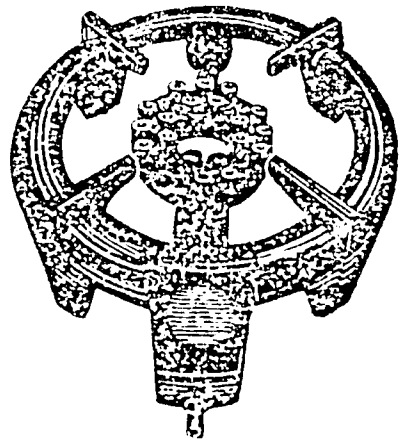

GOBAR GAS DOUBLE DELUX BURNER

This set is a combination of two burners. Each of them will use 450 Litres/Hr. (16 Cft./Hr.) of Gobar Gas and burns with an intensity equal to that of a kerosene pressure stove.

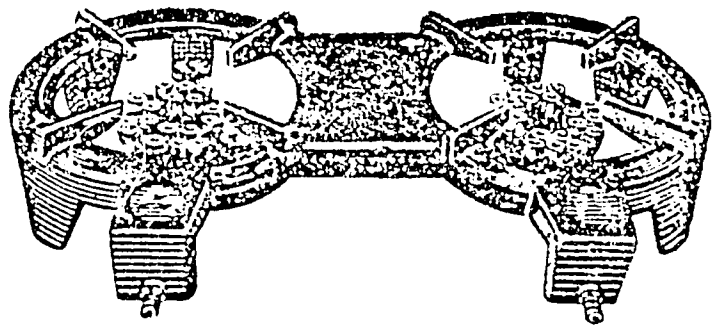

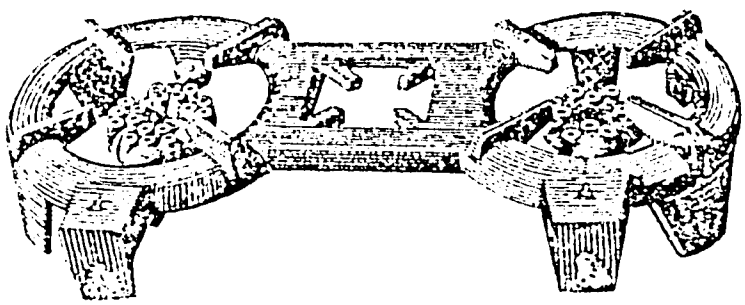

GOBAR GAS DOUBLE-DELUX-BURNER (ECONOMY-SIZE)

This set is combination of two burners out of which one will use 450 Litres/Hr. (16 Cft./Hr.) and the other will use 225 Litres/Hr. (8 Cft./Hr.) of gobar gas.

Figure 9

VENTURI MIXER DESIGN

SIDE VIEW:

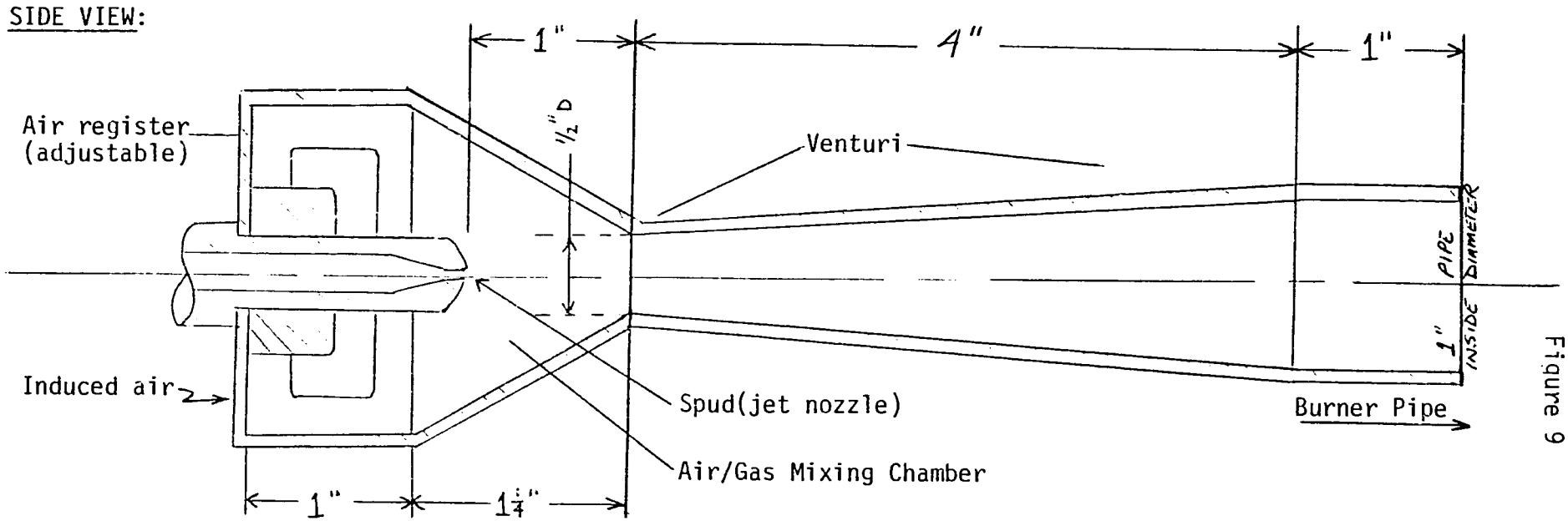

END VIEW:

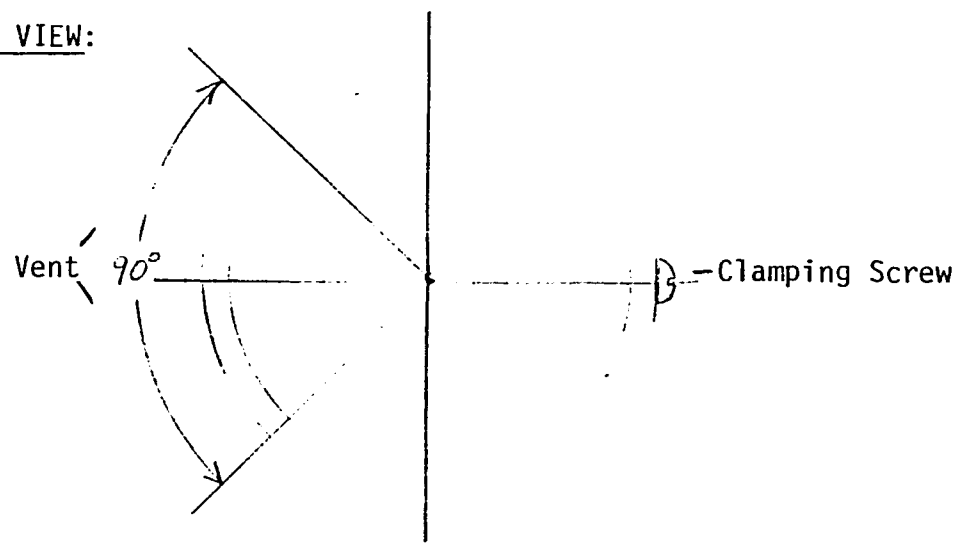

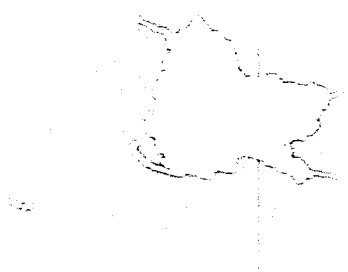

(Taken from private correspondence,
R. Wolf, January, 1980)

TABLE 8 (A)

Orifice enlargement -- NATURAL GAS APPLIANCES

gas description	dry gross BTU per cu ft	sp. gr.	orifice area multiplier
"average" natural gas (% CH_4)	1079	0.65	1.00
100	1012	0.55	0.98
95	961	0.60	1.05
90	911	0.65	1.18
85	860	0.69	1.29
80	810	0.74	1.42
75	759	0.79	1.57
70	708	0.84	1.73
65	658	0.88	1.83
60	607	0.93	2.13
55	557	0.98	2.38
50	506	1.04	2.70

TABLE 8 (B)

The chart below is calculated (using the previous formula) for propane (specific gravity = 1.562, 2572 BTU per cubic foot).

gas description	orifice area multiplier
propane	1.00
100% CH_4	1.51
95% "	1.66
90% "	1.82
85% "	1.99
80% "	2.19
75% "	2.41
70% "	2.66
65% "	2.93
60% "	3.27
55% "	3.66
50% "	4.15

TABLE 8 (C)

The last chart is for butane conversions (specific gravity 2.067, 3353 BTU per cubic foot).

gas description	orifice area multiplier
butane	1.00
100% CH_4	1.71
95% "	1.88
90% "	2.06
85% "	2.26
80% "	2.48
75% "	2.73
70% "	3.01
65% "	3.32
60% "	3.71
55% "	4.15
50% "	4.70

The "orifice area multiplier" is the number, times which we must multiply the area of the natural gas propane, or butane orifice to give the area of the orifice when burning biogas with a certain percentage of methane. Since biogas (less than 1000 BTU/ft^3, depending on methane concentration) contains less energy than natural gas (1079 BTU/ft^3), or butane (3353 BTU/ft^3), the area of the orifice must be enlarged to allow a larger volume of biogas to be burned. Table 9 shows drill sizes to be used in enlarging burner orifices. The numbers under the column labeled "designation" are steel-wire gauge numbers (U.S.); the letters are standard twist drill letters; the fractions are fractions of an inch.

Perhaps an example will help clarify how to calculate the enlargement of the orifice:

(1) A. Determine the type of stove--natural gas, propane, or butane.
B. In practice, initially assume that your biogas contains 60% methane. Later on, after converting the stove, if you find that gas supply to the stove is insufficient, you can always enlarge the orifice further.

(2) Either by direct measurement or from information supplied by the manufacturer, determine the diameter of the jet nozzle orifice. In this example, the diameter of the orifice will be chosen as 0.044 inches.

(3) In Table 9, find the diameter closet to the orifice diameter of your stove, 0.044 inches (it's underlined in the table). Note the corresponding area of the orifice--0.001452 square inches.

(4) (A) <u>For natural gas stoves</u> using biogas with 60% methane (underlined in Table 8A), the orifice area multiplier is 2.13. Multiply the area of the orifice, 0.001452, by the multiplier: 0.001452 X 2.13 = 0.0030927.

TABLE 9

Designation	Diameter inches	Area sq in.
1/2	0.5000	0.1963
31/64	0.4844	0.1843
15/32	0.4688	0.1726
29/64	0.4531	0.1613
7/16	0.4375	0.1503
27/64	0.4219	0.1398
Z	0.413	0.1340
13/32	0.4063	0.1296
Y	0.404	0.1282
X	0.397	0.1238
25/64	0.3906	0.1198
W	0.386	0.1170
V	0.377	0.1116
3/8	0.375	0.1104
U	0.368	0.1064
23/64	0.3594	0.1014
T	0.358	0.1006
S	0.348	0.09511
11/32	0.3438	0.09281
R	0.339	0.09026
Q	0.332	0.08657
21/64	0.3281	0.08456
P	0.323	0.08194
O	0.316	0.07843
5/16	0.3125	0.07670
N	0.302	0.07163
19/64	0.2969	0.06922
M	0.295	0.06835
L	0.29	0.06605
9/32	0.2813	0.06213
K	0.281	0.06202
J	0.277	0.06026
I	0.272	0.05811
H	0.266	0.05557
17/64	0.2656	0.05542
G	0.261	0.05350
F	0.257	0.05187
E-1/4	0.2500	0.04909
D	0.246	0.04753
C	0.242	0.04600
B	0.238	0.04449
15/64	0.2344	0.04314

Designation	Diameter inches	Area sq in.
A	0.234	0.04301
1	0.288	0.04083
2	0.221	0.03836
7/32	0.2188	0.03758
3	0.213	0.03563
4	0.209	0.03431
5	0.2055	0.03317
6	0.204	0.03269
13/64	0.2031	0.03241
7	0.201	0.03173
8	0.199	0.03110
9	0.196	0.03017
10	0.1935	0.02940
11	0.191	0.02865
12	0.189	0.02806
3/16	0.1875	0.02761
13	0.185	0.02688
14	0.182	0.02602
15	0.1800	0.02545
16	0.1770	0.02461
17	0.1730	0.02351
11/64	0.1719	0.02320
18	0.1695	0.02256
19	0.1660	0.02164
20	0.1610	0.02036
21	0.1590	0.01986
22	0.1570	0.01936
5/32	0.1563	0.01917
23	0.1540	0.01863
24	0.1520	0.01815
25	0.1495	0.01755
26	0.1470	0.01697
27	0.1440	0.01629
9/64	0.1406	0.01553
28	0.1405	0.01549
29	0.1360	0.01453
30	0.1285	0.01296
1/8	0.1250	0.01227
31	0.1200	0.01131
32	0.1160	0.01057
33	0.1130	0.01003
34	0.1110	0.00968
35	0.1100	0.00950
7/64	0.1094	0.00940
36	0.1065	0.00891
37	0.1040	0.00849
38	0.1015	0.00809
39	0.0995	0.00778

Designation	Diameter inches	Ar sq
40	0.0980	0.
41	0.0960	0.
3/32	0.0938	0.
42	0.0935	0.
43	0.0890	0.
44	0.0860	0.
45	0.0820	0.
46	0.0810	0.
47	0.0785	0.
5/64	0.0781	0.
48	0.0760	0.
49	0.0730	0.
50	0.0700	0.
51	0.0670	0.
52	0.0635	0.
1/16	0.0625	0.
53	0.0595	0.
54	0.0550	0.
55	0.0520	0.
3/64	0.0473	0.
56	0.0465	0.
57	0.0430	0.
58	0.0420	0.
59	0.0410	0.
60	0.0400	0.
61	0.039	0.
62	0.038	0.
63	0.037	0.
64	0.036	0.
65	0.035	0.
66	0.033	0.
67	0.032	0.
1/32	0.0313	0.
68	0.031	0.
69	0.0292	0.
70	0.028	0.
71	0.026	0.
72	0.025	0.
73	0.024	0.
74	0.0225	0.
75	0.021	0.
76	0.020	0.
77	0.018	0.
78	0.016	0.
1/64	0.0156	0.
79	0.0145	0.
80	0.0135	0.

(B) For propane stoves using biogas with 60% methane (underlined in Table 8B), the orifice area multiplier is 3.27. Multiply the area of the orifice, 0.001452 X 3.77 = 0.004748.

(C) For butane stoves using biogas with 60% methane (underlined in Table 8C), the orifice area multiplier is 3.71. Multiply the area of the orifice, 0.001452, by the multiplier: 0.001452 X 3.71 = 0.005387.

(D) 0.0030927, 0.004748, 0.005387 are the recommended orifice areas for using biogas (60% methane) in natural gas, propane, and butane stoves, respectively.

(5) In Table 9, look up the area closet to the areas calculated above (see arrows). The chart gives the diameter and designation for each of orifice. The desgination refers to the drill size you should use to enlarge the orifice. Thus for natural gas, propane, and butane stoves, the drill sizes you should use are 1/16", 6/64", and #45 respectively.

This outline can be used to estimate jet nozzle orifice enlargement. It's always a good idea. when using Tables 8 and 9, to choose the smaller size when the calculated value is between sizes on the chart. Later on you can always increase the size of the orifice if necessary.

Based on the estimated gas production rates in Table 5 and 0.47m^3 biogas per hour needed to operate one 4" burner (Table 7), the number of hours of cooking time per day at each site are:

Sanguinetti	7.0 - 13.0 hrs/day
Ducketts	13.8 - 26.2 hrs/day
Kendal	13.8 - 26.2 hrs/day
Roehampton	13.8 - 26.2 hrs/day
Elim (1)	192 - 360 persons/day

(1) For Elim, a value of 0.38m3 biogas per person per day (Table 7) was used to calculate the total number of persons that can be cooked for.

Lighting with Biogas

Biogas lighting is in great demand, especially in unelectrified rural areas. The basic, most common type of lamp (see Figure 10), is an incandescent burner over which a cone of material (called a mantle), which will incandesce when heated, is hung. Biogas enters through the gas cock and gas regulator, mixes with air (which enters through the air regulator), expands in the ventury chamber, and is squirted into the mantle, (through the ventury nozzle), where it burns. The heat generated by the burning air/biogas mixture causes the mantle (made from fibers soaked in solutions of thorim oxide, cerium oxide, and other compounds) to incandesce, emitting light.

The light produced by these lamps is generally of lesser intensity than electric lights. For example, a well-designed, high pressure gas lamp with a single inverted mantle (the mantle hangs below the main body of the lamp as in Figure 10), will give off the same amount of light as a 60 watt electric bulb /3/ Gas pressures of 2.75-3.25 inches water gauge are required to run this type of lamp and must be fairly closely monitored. Low gas pressure causes the light to dim and high gas pressure can break the mantles quickly.

Commercially available pressure lamps cannot be run on biogas although the burner jets and gas mantle are suitable for use in biogas lamps. Simple biogas lamps can be readily manufactured using designs from India and China (Figures 10-16). These single mantle

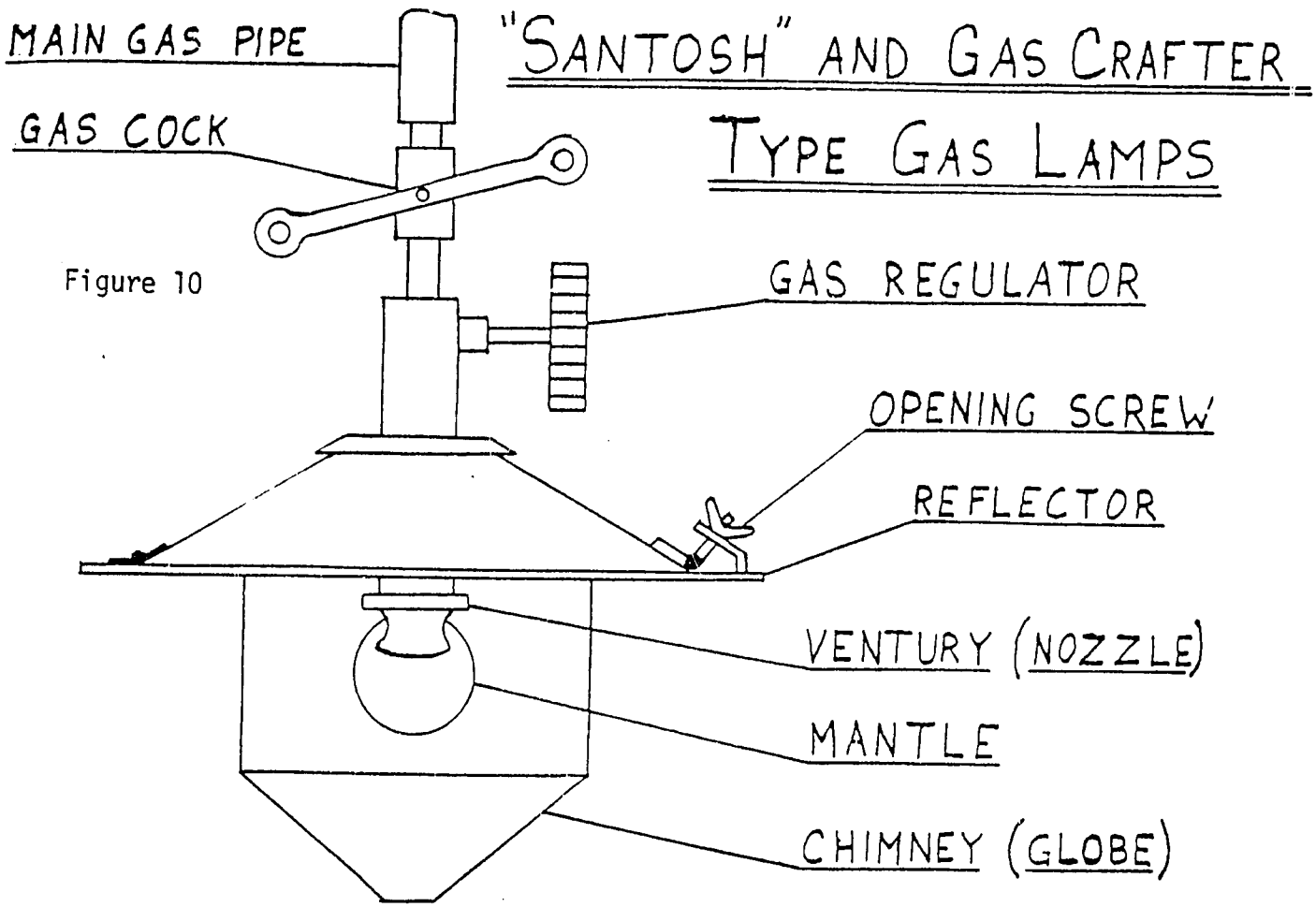
"SANTOSH" AND GAS CRAFTER
TYPE GAS LAMPS
MAIN GAS PIPE
GAS COCK
GAS REGULATOR
OPENING SCREW
REFLECTOR
VENTURY (NOZZLE)
MANTLE
CHIMNEY (GLOBE)

Figure 10

Figure 11

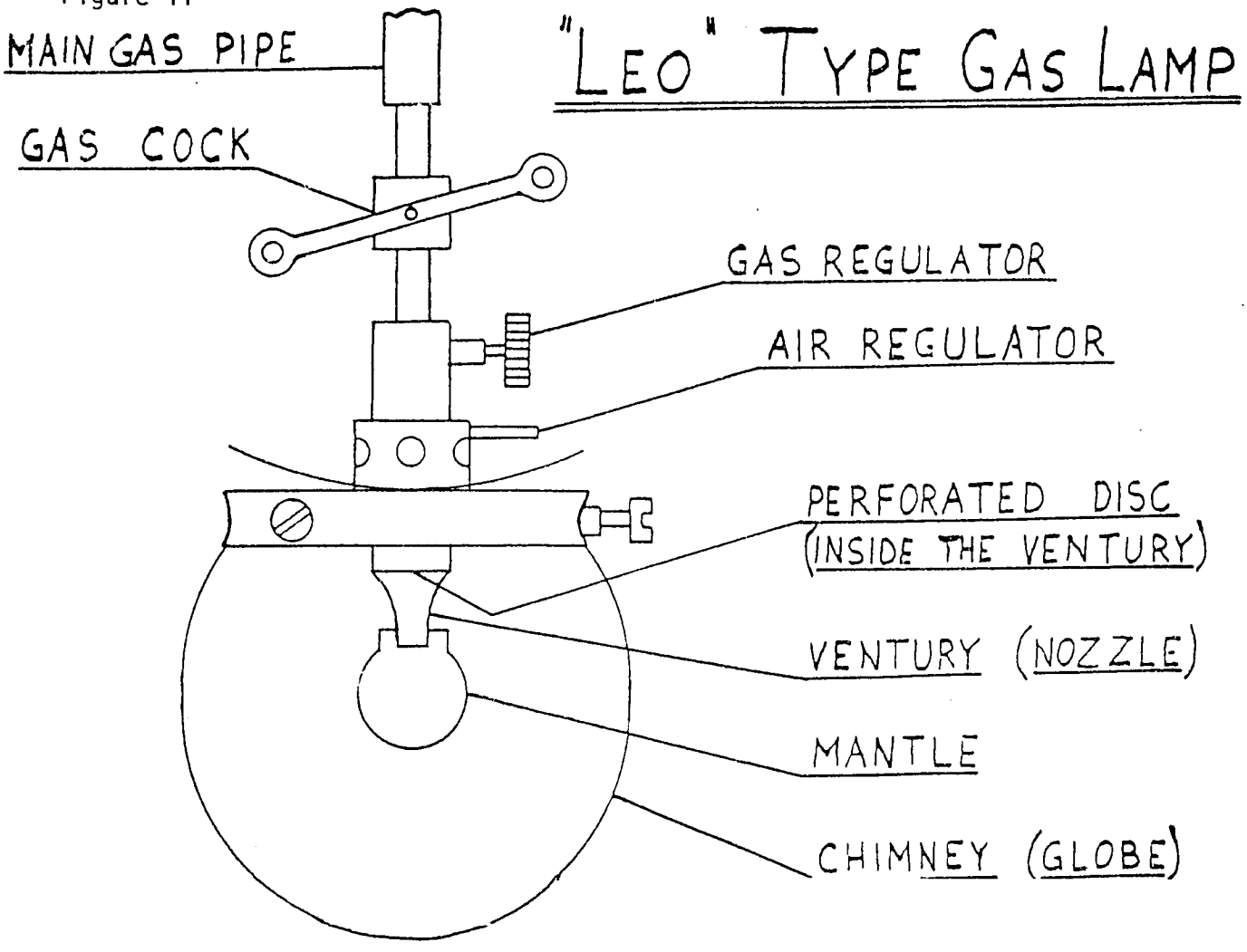
"LEO" TYPE GAS LAMP
MAIN GAS PIPE
GAS COCK
GAS REGULATOR
AIR REGULATOR
PERFORATED DISC
(INSIDE THE VENTURY)
VENTURY (NOZZLE)
MANTLE
CHIMNEY (GLOBE)

Figure 12

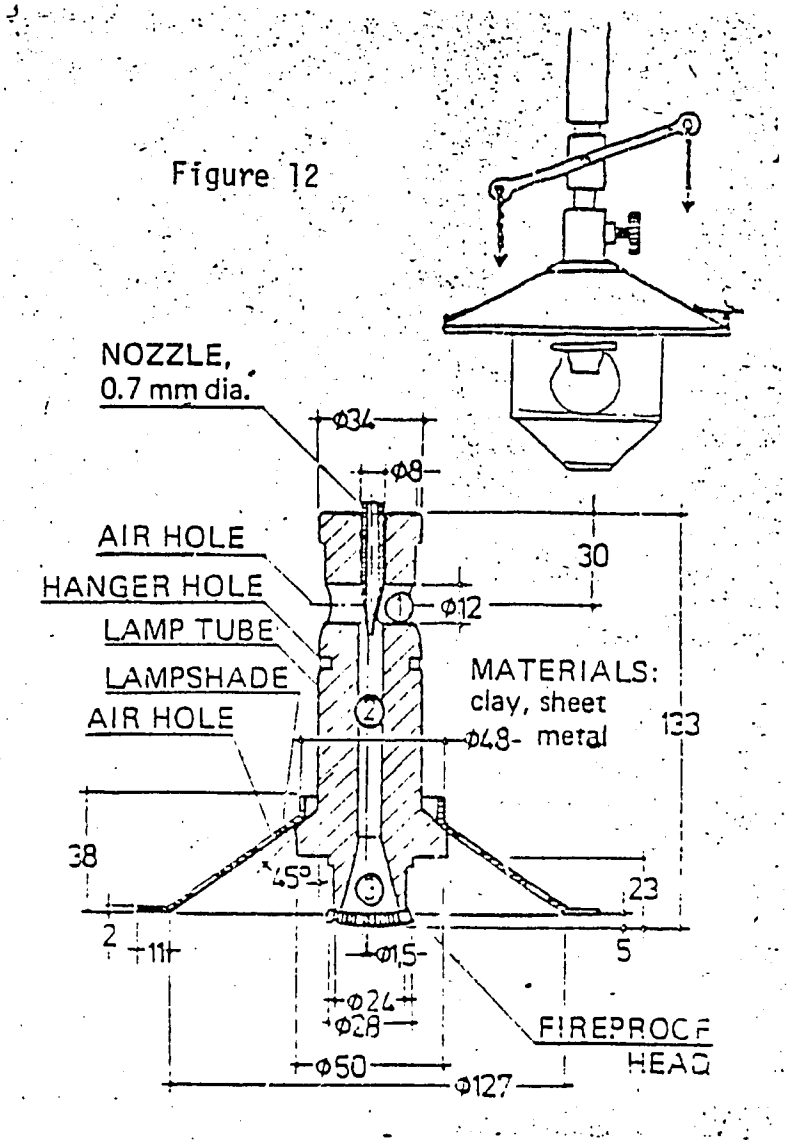

Figure 13

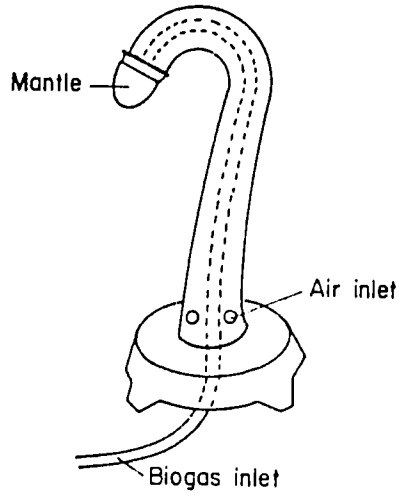

Figure 14

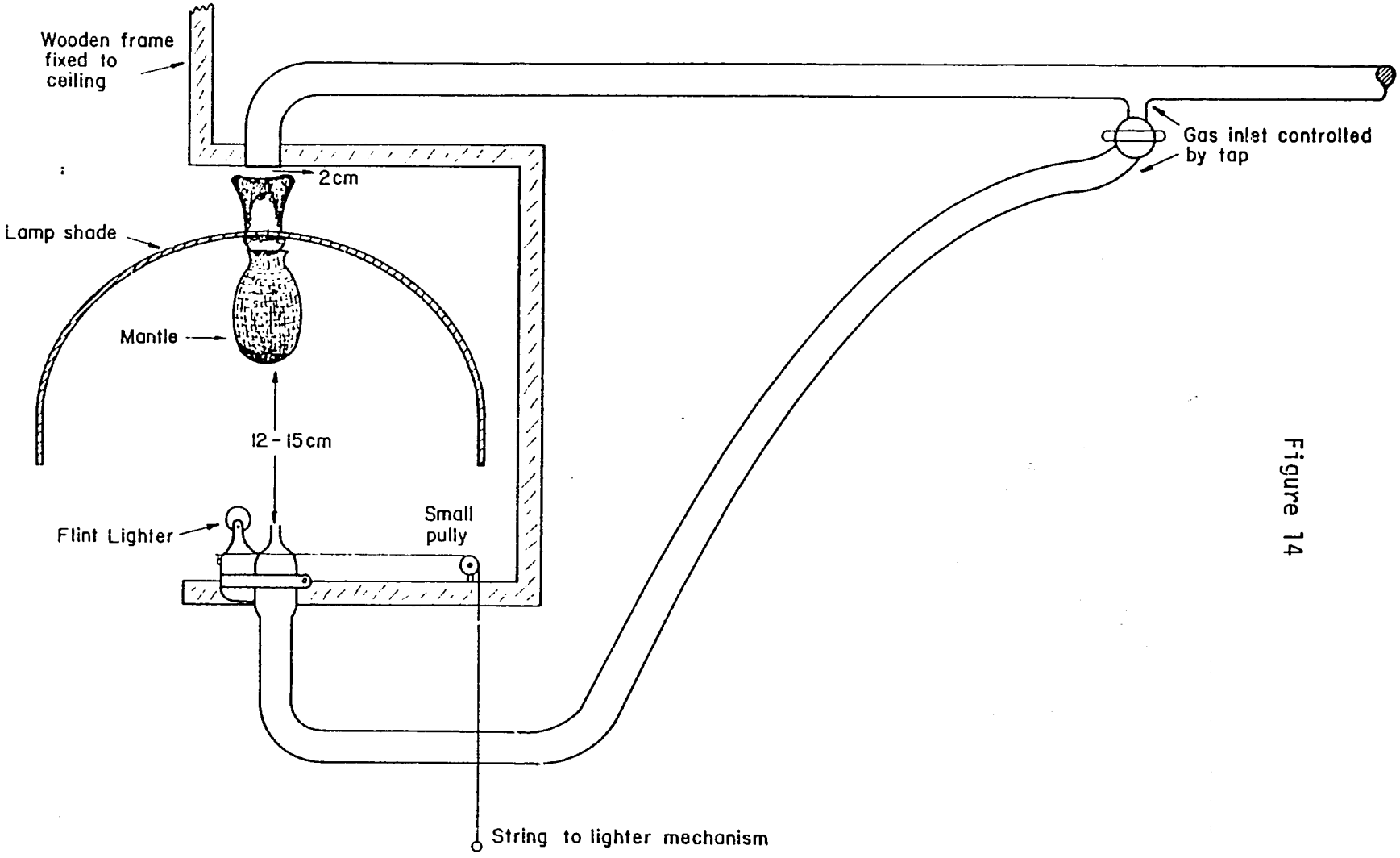

Use of a flint lighter for igniting biogas lamps (Hsin Chao People's Commune, Sichuan Province).

Figure 15

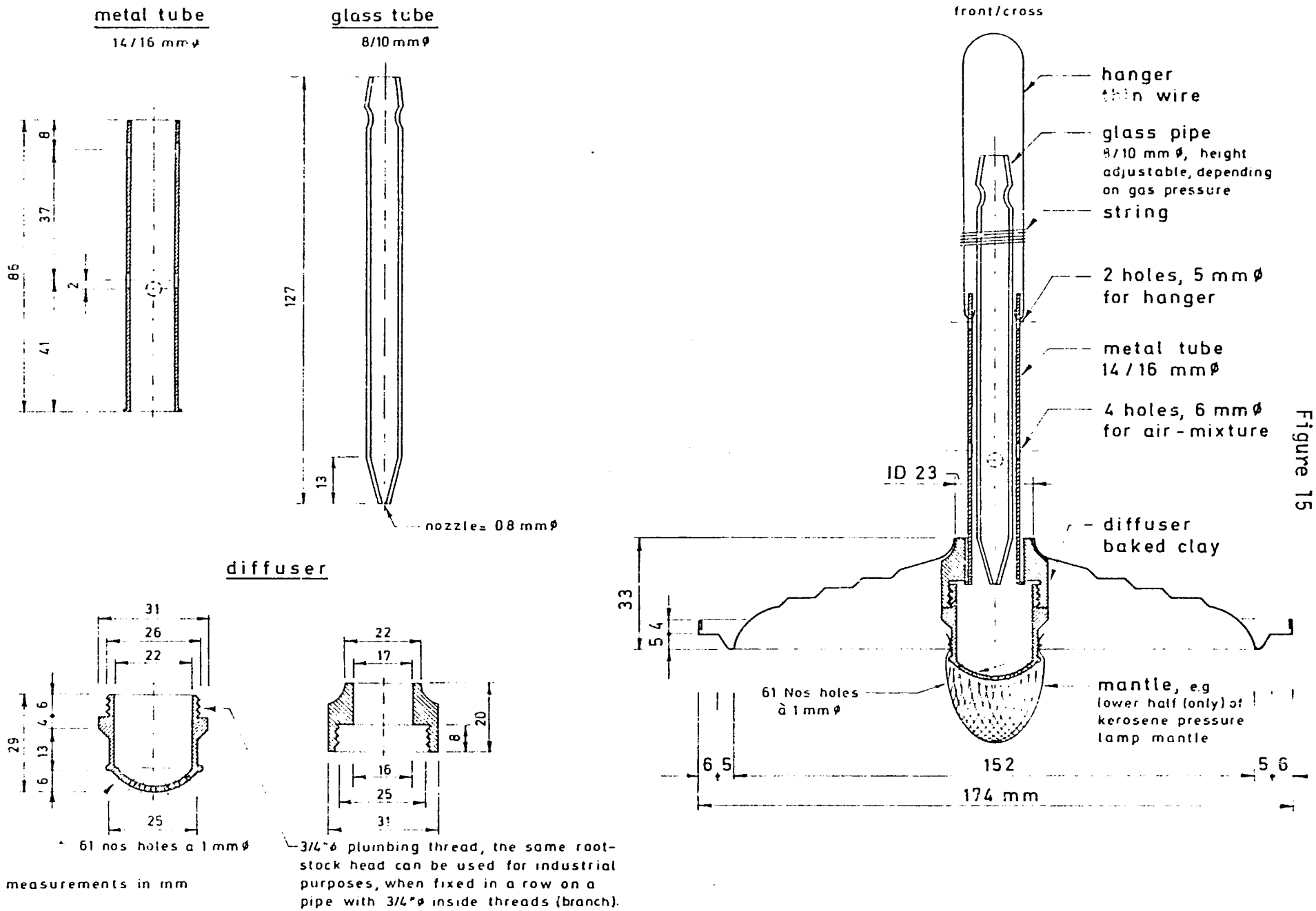

Details for construction of a biogas lamp (hanging model)

Figure 16

Operation of lamps

(a) *Single mantle*

The lamp is opened and the clay nozzle fitted (sometimes called a "venturi" or "carborundum"). The mantle should be opened to form a hollow ball, then tied to the venturi. The gas cock and gas regulator may be opened fully, then the mantle should be lit and allowed to burn. Once the mantle is burning well, the lamp can be closed.

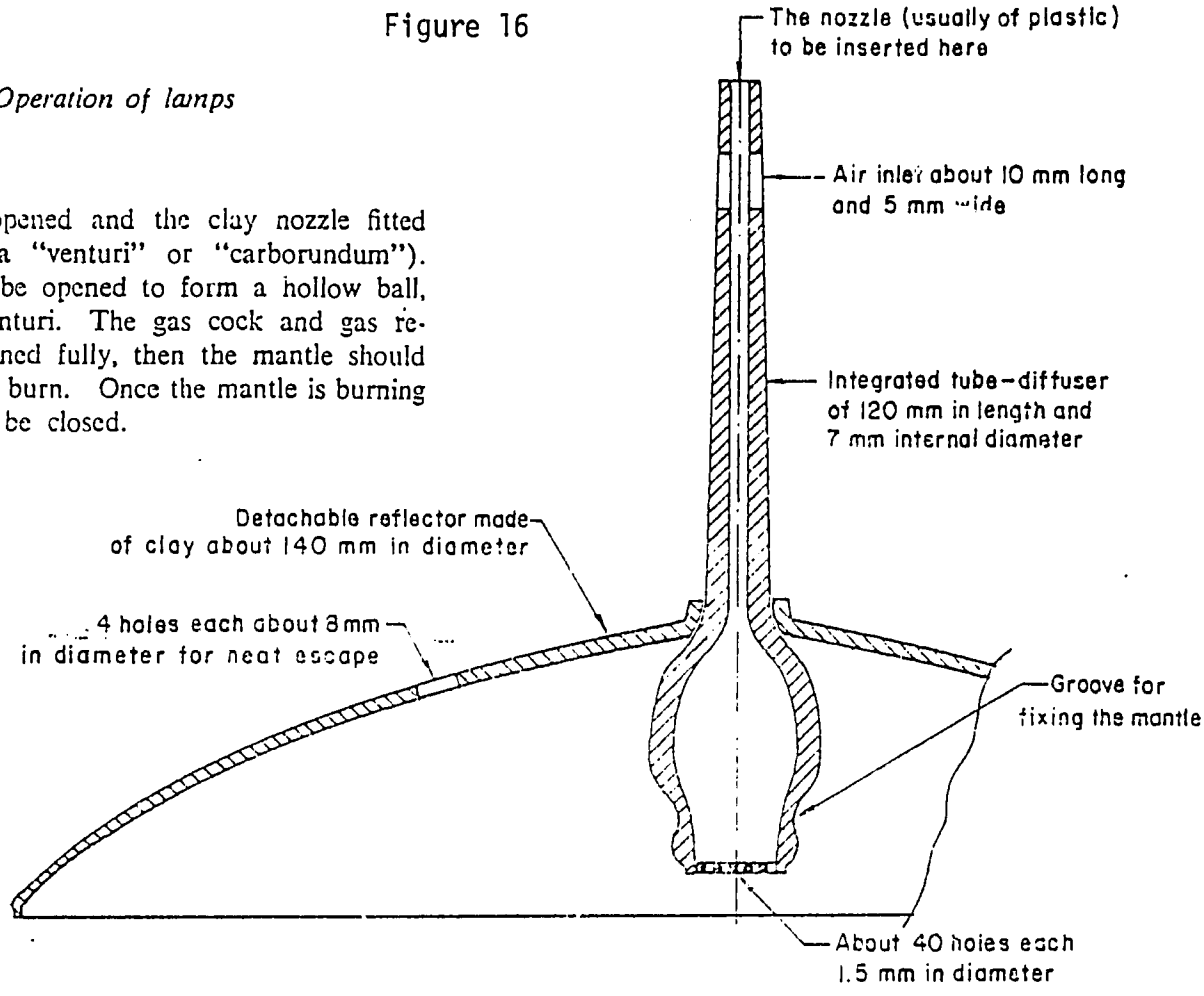

Clay biogas lamp (China)

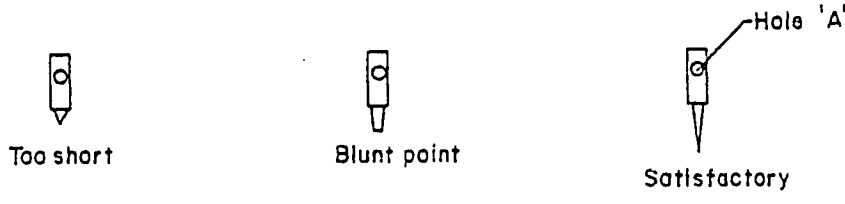

Correct shape of needle

The lamp should be allowed to heat up until it makes a noise. Then the gas regulator should be adjusted so that the mantle is at its brightest. It is usually unnecessary to adjust the gas again until the mantle is changed.

To turn off the lamp, only the gas cock should be closed.

To relight the lamp, first a match should be applied close to the mantle, either through the hole in the bottom of the glass globe or by opening the reflector. Then the gas is turned on. If this sequence is reversed, there will be a minor explosion, which may break the mantle. The lamp must heat up until it makes a noise, after which it will give a good steady light.

Before a new mantle is fitted, the clay nozzle should be removed and the venturi tube thoroughly cleaned out of any insects, cobwebs, carbon or dirt. A piece of cloth wrapped around a pencil or small stick may be used. The glass globe and reflector should be washed with soap (or ash) and water, whenever necessary, and left to dry completely before the lamp is lit; otherwise the glass may crack and the surface of the reflector may go dull.

(b) *Double mantle type*

The lamp should be opened and the nozzle screwed into place. The gas cock may then be opened and the gas lit. The gas regulator should be adjusted until the flame is 65 mm (2.5 in) long from the tip of the nozzle to the end of the flame.

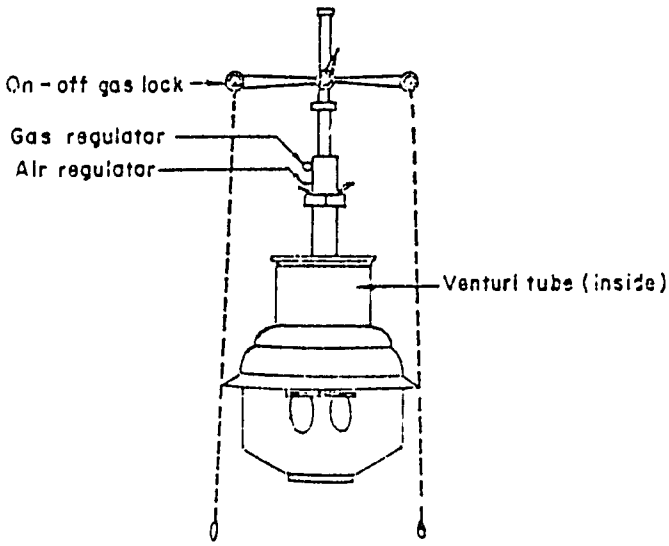

(i) Inside type

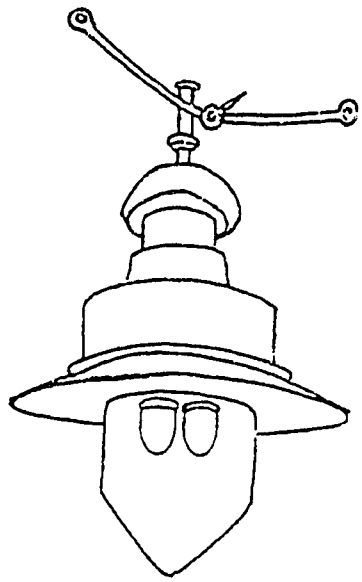

(ii) Outside type

Double mantle lamps (India)

The air regulator should be adjusted to make the flame nonluminous, i.e., bluish. The gas cock should then be closed. The mantle may now be taken out of the box, held by a leg, without touching the fabric and fitted to the nozzle. The mantle can then be lit to burn up the coating without turning on the gas.

When lighting the lamp, a match should first be applied close to the mantle, either through the hole in the bottom of the glass globe or by opening the reflector in the case of outside lamps. Then turn the gas on. If this sequence is reversed, there will be a minor explosion, which may break the mantle.

The lamp usually takes a few minutes to heat up and will then give a good steady light.

Sometimes a lamp is found to give a better light with a perforated clay disc fitted inside the nozzle. There is no fixed rule and it is a matter of experiment.

Maintenance of lamps

The most common reason for properly adjusted lamps not working well is dirt, especially insects' nests, inside the venturi tube. The method of cleaning this out was described above.

The second main reason is a defective needle in the gas regulator (this device is not found usually in Chinese lamps). This must be long, thin and have a fine point (figure 74). It must come down low enough to protrude through the jet and close it off.

If the needle does not come down low enough, then file hole A and make a slot so that it can come down far enough. The gas regulator lever fits into this hole.

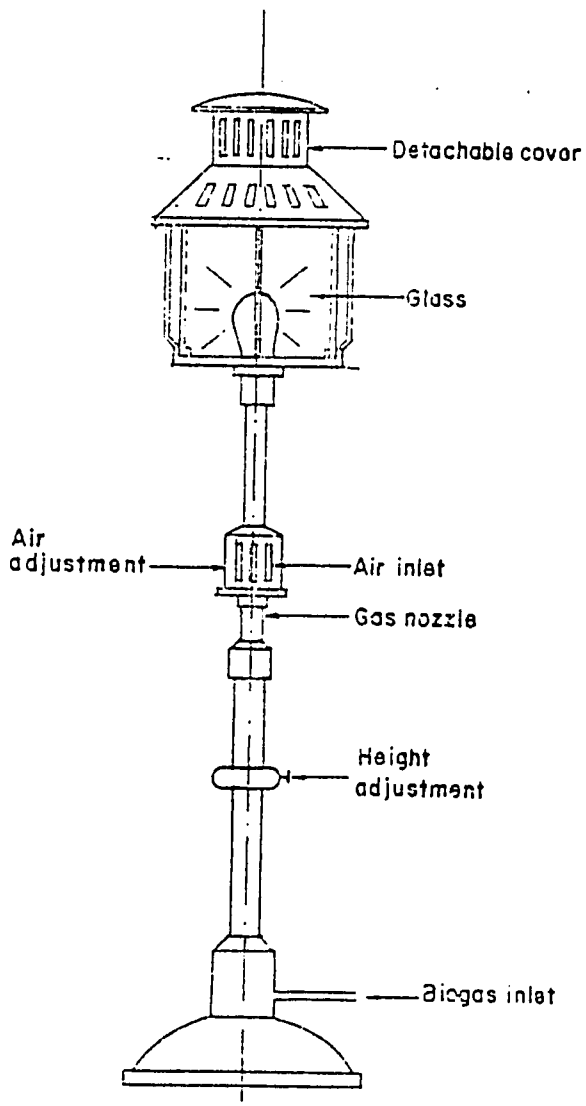

Biogas table lamp (Pakistan)

lamps consume about 0.11-0.15m^3 biogas per hour. Double mantle lamps (Figure 17), use about twice as much fuel as single mantle lamps.

Locally available propane, butane, or natural gas lamps can be operated easily on biogas. Natural gas lamps will work well with biogas without modification. Propane lamps, designed for air/fuel ratio of about 25, and butane lamps, designed for an air/fuel ratio of about 33, have to be adapted. In order to use them with biogas, less air should be mixed with the gas so that the air/fuel ratio will be less than 9, depending on the design of the burner. /8/

To calculate the amount of biogas needed for lighting:

(1) Estimate the total number of lamps necessary for the household, the number of hours each lamp will be operated per day, and whether the lamps have single or double mantles. Multiply by the gas consumption rate.

(2) (A) For example, consider a hypothetical household using a single mantle lamp for 4 hours/day and a double mantle lamp for 3 hours/day.
(B) Multiply by the gas consumption rate:
--single mantle lamp:
0.11-0.15m^3 biogas/hour X 4 hours/day = 0.44-0.60m^3/day,

--double mantle lamp:
0.22-0.30m^3 biogas/hour X 3 hours/day = 0.66-0.90m^3/day.

(C) Total consumption of biogas for lighting: 1.1-1.5m^3/day.

Refrigeration

Absorption cycle refrigerators (ACR) designed to run on gas or kerosene can easily be converted to biogas operation. The only adjustment is to replace the kerosene or gas burner with a biogas burner (see Figure 18). However, the following modifications may be required /3/:

-- A piece of metal gauze (preferably non-ferrous) should be put over the flame port to prevent the flame lifting off.

-- The jet size may have to be slightly altered to get the right amount of heat (done by trial and error).

-- The air port may have to be adjusted to get an "efficient" flame rather than a long, "lazy" flame.

-- The barrel size should be altered. The diameter may have to be increased in diameter to reduce the flame speed and thus avoid flame lift off.

The amount of biogas required to run the refrigerator will vary, depending on its size, room temperature, refrigerator temperature, amount of material in the refrigerator and its condition. For estimating purposes, a figure of 0.6-1.2m^3 biogas per hour per m^3 refrigerator capacity is normally used. Therefore, a refrigerator of 105 litres (0.105m^3) capacity would require:

-- 0.06-0.13m^3 biogas/hour (0.105 l X 0.6 - 1.2m^3/hour)
-- 1.5-3.0m^3 biogas/day (0.105 l X 0.6 - 1.2m^3/hour X 24 hrs/day)

A summary of kerosene, gas, and electric refrigerators tested by the World Health Organization is included in Appendix 1.

Figure 18

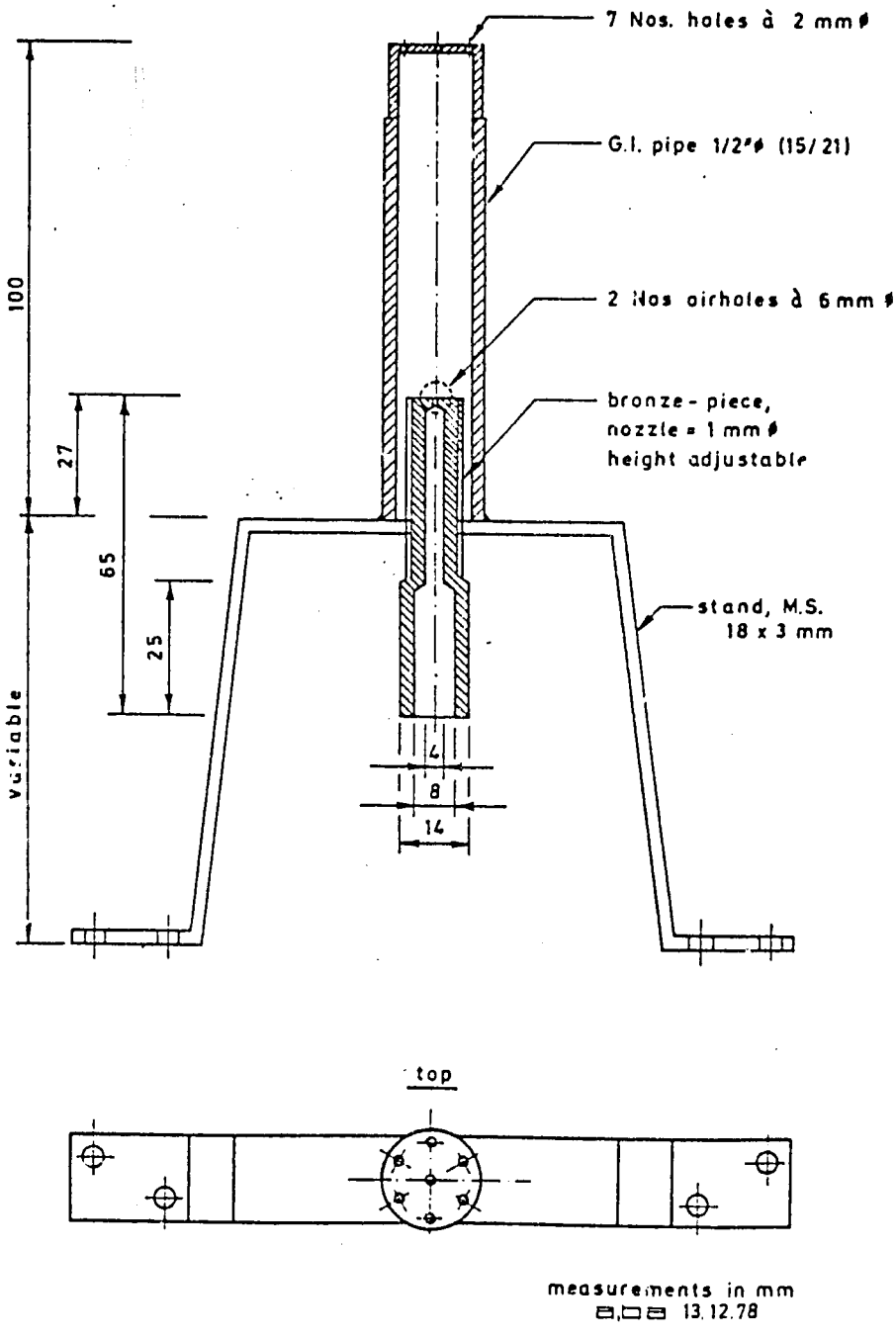

A REFRIGERATOR BURNER

A fridge that runs on the heat of a kerosene flame can be run on cowdung gas with a suitable burner. The burner whose design is presented here has given very good results in tests conducted in Nepal. With a gas pressure of 8 cm and a consumption of 100 ltr/hr, this burner has successfully worked a fridge of 12 cft capacity over a test period of eight months.

It is simple, elegant and inexpensive. To fit it into the space provided, the stand can be made taller or shorter. The nozzle can be slightly adjusted and fixed a little higher or lower, as may be found necessary.

This burner has also run a kerosene incubator (100 egg capacity), and can serve very well as a low temperature bunsen burner, or for any other application requiring a small, continuous, clean, smokeless flame.

Electricity Generation

1. Introduction

Biogas is an excellent fuel for use in internal combusiton engines (ICE) because it has a high octane rating, leaves little carbon deposits in the cylinder, and greatly reduces the amount of "sludge" build-up in the oil, and thus its use allows greater distances between oil changes. It is important, however, to take a realistic look at the practicality of using biogas in engines because the amount of biogas needed may be substantial, depending on the size of the engine and the number of hours of use.

Gasoline ICE's (spark ignition engines) can be adapted to run on 100% biogas although it's common to use a little gasoline for starting the engine. After the engine has been started on gasoline, the engine is switched over to biogas operation. Biogas high octane rating (Methane rated at 120 or more, biogas at 100 or more, gasoline at 85-95) allows it to be used in high compression engines since it very rarely pre-detonates in the cylinder. In theory, the higher the compression ratio the more efficient the engine will be. In practice, about a 15:1 compression ratio is optimum. /13/

Carbon dioxide in biogas decreases methane's ability to detonate when it is ignited in the cylinder (hence, biogas has a lower octane rating) as compared to pure methane gas. Carbon dioxide also dilutes the energy content of biogas (biogas-600 BTU/ft^3, methane-1000 BTU/ft^3). These two things reduce the available power from the engine. Removing (scrubbing) carbon dioxide will increase the power available, although for small-scale applications, the 10-20% decrease in power from using biogas may not be critical.

Diesel engines (compression ignition engines) can be easily adapted to biogas operation, especially because of the higher compression ratios employed. In a diesel engine, the air alone is compressed. When the piston reaches the right place in the cylinder, diesel fuel is squirted into the cylinder and the heat developed by the compressing of the air ignites the mixture. Therefore, in a diesel engine, the injected fuel should burn as soon as it enters the cylinder. Cetane numbers are a measure of how easily the fuel spontaneously ingites in the cylinder. The higher cetane number fuels make the best diesel fuels.

Unfortunately, biogas has a poor cetane number, i.e. it doesn't ignite very fast. Another problem is that in diesel engines, the temperature at the end of the compression stroke is normally not over 700°C, whereas the ignition temperature of a methane/air mixture is 814°C. In diesel engines, these problems are solved by injecting a little (10-20% of the normal amount) diesel fuel just before the end of the compression stroke. This small amount of diesel fuel ignites the whole biogas/diesel/air mixture. Thus diesel engines which run on a biogas/diesel fuel mixture are commonly called dual-fuel engines.

2. Engine Parameters

When converting an engine to run on biogas, keep in mind that every engine seems to behave differently in terms of what is "optimum" for that particular engine. The main factors which change are:

a. Compression Ratio - Higher compression ratios, such as are found in dual-fuel engines, increase the power available from biogas fuelled engines. Ratios between 12:1 and 17:1 are best.

b. Timing - Due to the slow flame speed of methane or biogas, many researchers suggest advancing the timing for most efficient operation. Neyeloff and Gunkel(found that advancing the timing on their test engine so that the engine fired 30 degrees before top dead center was best. As all engines are different, the a- mount of timing advancement for each engine will have to be done by trial and er

c. Fuel/air ratio - As previously discussed, the high octane rating of methane and biogas allows higher compression ratios to be used. The fuel/air ratio seems to depend on the compression ratio and the amount of methane in the biogas. For "perfect" mixtures of methane gas (fuel/air ratio - 1 part methane to 10 parts a the compression ratio should be lower than for "leaner" mixtures (fuel/air ratio 1 part methane to 15-30 parts air)./8/ In a dual-fuel engine, the leaner mixtur may prove to be better. The correct fuel/air mixture for a particular engine ca be found by experiment. Start with a lean mix and enrich the mixture as necessa

d. Altitude - At higher altitudes, the efficiency of using biogas as a fuel will dr because of decreased air pressure. Lower air pressure means that less air and b gas will be forced into the cylinder, causing a loss of power. For example, at a altitude of 5000 feet, the volumetric efficiency will drop by 16% as compared to sealevel, all else being equal./8/

e. Efficiency - An important factor affecting the efficiency of an engine is its loa While it may appear to use less biogas, a free running engine, i.e. with zero loa actually uses more biogas per brakehorsepower-hour. Therefore it's important, in terms of engine efficiency, to match the load on the engine to it's rated output nearly as possible. See Table 10 below. Stationary engines can be made more eff cient by utilizing the waste heat for other tasks. For example, an engine that i 33% efficient produces:

Heat Energy Output/8/	
as work	33%
as friction	9%
as hot water (in cooling system)	27%
as exhaust heat	28%
as radiation losses	3%
Total	100%

TABLE 10

percentage of rated load	BTU per BHP hour	Calories per BHP hour
100	10000	2520
80	10800	2720
70	11300	2850
60	12000	3020
50	13000	3275

Thus, 66% of our energy input is given off as waste heat. But other engines may not have an efficiency as high as 33%. 20-30% is a more realistic figure. Hence, with less efficient engines, more waste heat (i.e. total number of BTU's) is given off which means that the engine will run hotter. Striving for a more efficient biogas powered ICE will mean a cooler running, longer lasting engine. Waste heat from stationary engines located near the biodigester can be recirculated through the slurry or used to heat a water jacket around the digester. This should not be done, however, if intermittent heating of the slurry causes temperature fluctuations in slurry temperature, as this can decrease gas production.

Diesel engines, although already a high compression engine, can have their effective compression increased by adding a turbocharger--essentially an air pump which rams the fuel/air mixture into the cylinder. This means that you start with a higher air pressure in the cylinder and therefore end up with a corresponding higher pressure. A turbocharger diesel engine has increased power output (up to 75% greater) and hence a greater overall efficiency./8/

3. Engine Conversion

a. Any ICE can easily be converted to run on biogas but the person doing the conversion should always be an experienced mechanic. The parts needed for the conversion should be available locally. The cost will greatly depend on the method of conversion. There are dual-fuel engines available that are already adapted to run on biogas. Companies which manufacture such dual-fuel engines include Kirloskar Oil Engines (Appendix 2) and Onan (Appendix 3). Other companies which sell gasoline and diesel engines in Jamaica (Appendix 4) should also be consulted. Their products can be easily adaptable to biogas operation and they should be able to tell you how best to effect the conversion

b. Diesel engine conversion and operation:

Biogas should enter the engine between the air cleaner/intake and the engine as in Figure 19, but there are several gas inlet devices designed to suit different engine designs. One way is to connect it directly to the inlet pipe (Figure 20), another way is through a cross pipe (Figure 21), and a third way is through a gas venturi (Figure 22). The design you choose will depend, to a large extent, on the design of the engine to be adapted.

The starting procedure for a dual-fuel diesel is the same as with an unconverted engine. The engine is started on diesel fuel only, with the biogas choke valve fully closed. After the engine has been running steady on diesel fuel for awhile, the biogas choke valve is opened very slowly.

Figure 19

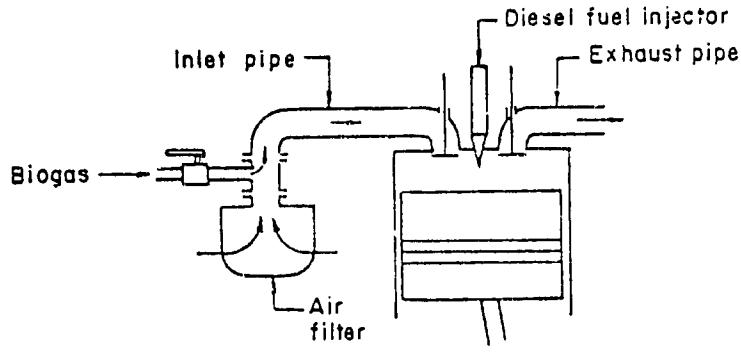

Figure 20

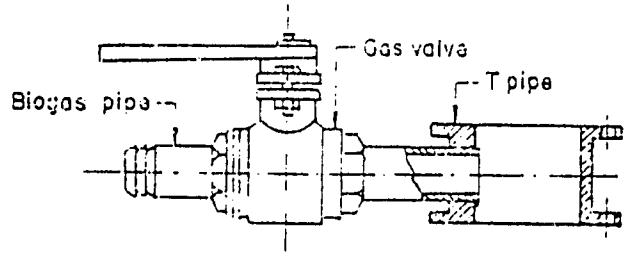

Figure 21

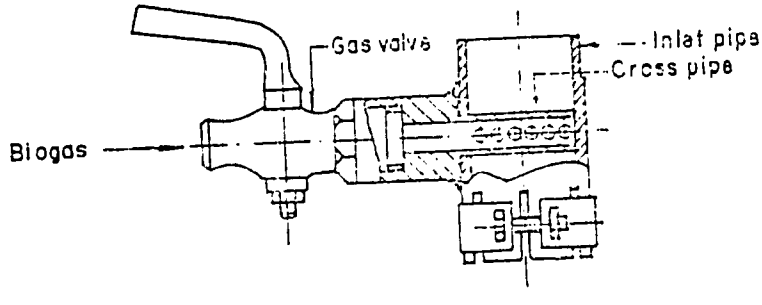

Figure 22

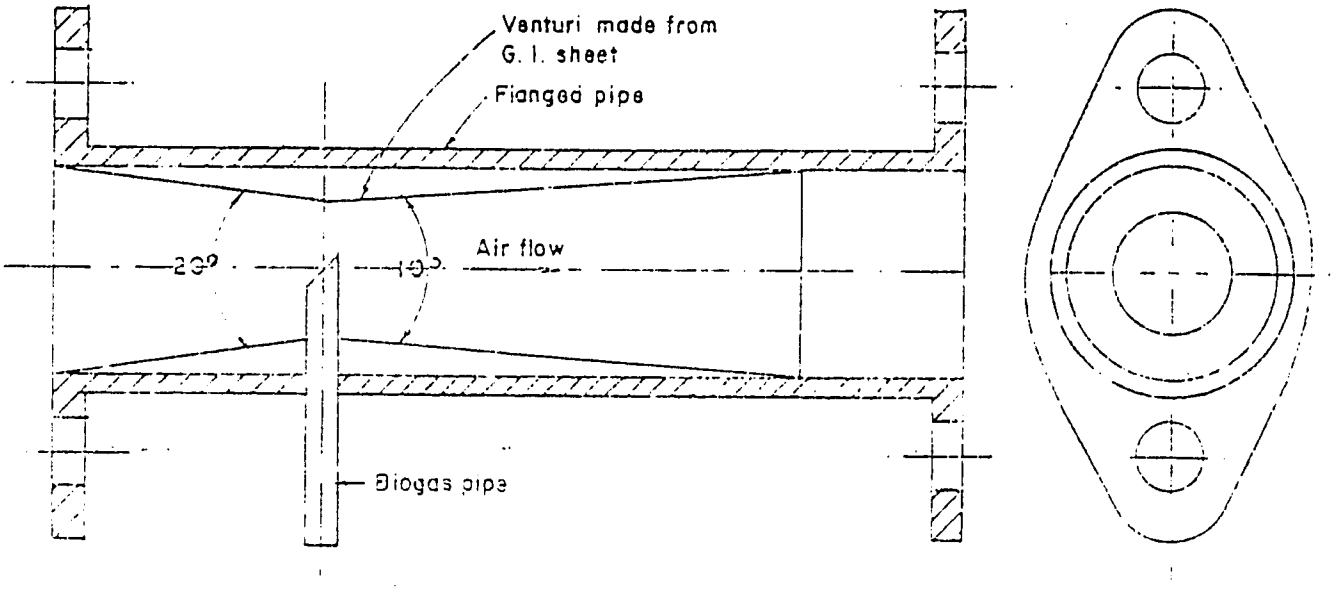

Because the fuel mixture is now richer due to the biogas entering the cylinder, the engine will tend to run faster, but the speed governor will automatically compensate by decreasing the diesel oil supply. If the biogas is fed into the engine too suddenly or too much, the engine may start to knock, fail to take on load, emit smoke, or even stop altogether. If this happens, the biogas choke should be slowly closed, until the engine is running smoothly. The amount of biogas an engine will consume depends on its make and the efficiency of its governor. The biogas choke valve should be opened or closed in response to any changes in engine speed or load to ensure smooth running. If the load varies too much or too frequently, the biogas choke valve will require constant attention unless the valve is equipped with an automatic governor. Small fluctuations in engine speed will be compensated by the speed governor by decreasing the diesel oil. Engines run best when gas pressure (usually between 2-4" water gauge) is constant. To stop the engine, close the biogas choke valve first and then the throttle valve.

c. Gasoline engine conversion and operation

These are not as commonly used as diesel engines, although they can also easily operate on 100% biogas. The same gas inlet devices used in diesel engines (Figures 19-22) can be used with gasoline engines. Another possibility is presented in Figure 23 and Appendix 5.

Figure 23

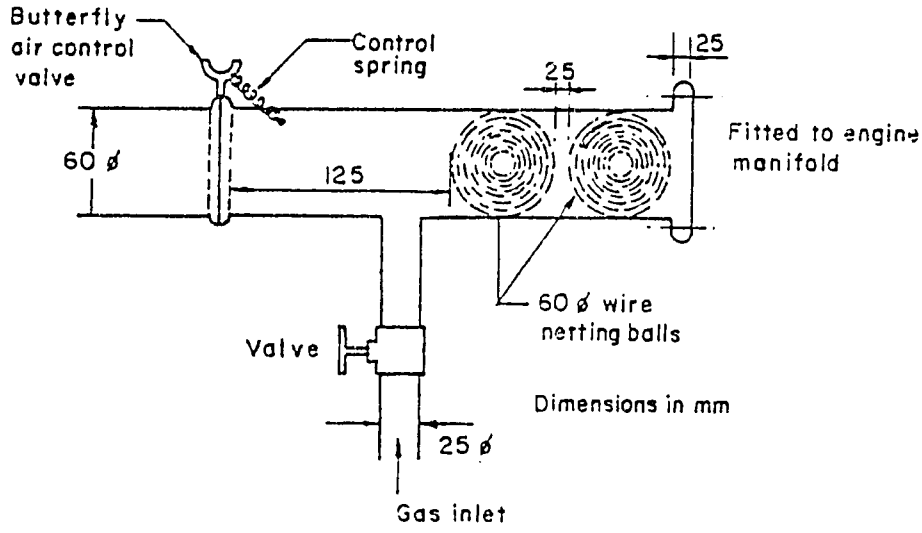

Carburettor for 10 bhp petrol engine running on biogas

Gasoline engines can be started on biogas but the amount of gas supplied to the engine during starting should be greater than that required during normal operation. After the engine has started and warmed up, the flow of biogas car be reduced a bit until the engine is running smoothly. It is, however, often easier to start the engine on gasoline and then switch over slowly to biogas. Gasoline engines tend to run hotter on biogas so it is important to make sure that the colling system is functioning properly and the engine has proper ventilation.

d. Biogas consumption

Engines require about 0.45-0.54m^3 biogas per hour per brake horsepower. Table 11 below shows gas consumption rates for small engines.

TABLE 11

Biogas Consumption/Power Output				
Horsepower	Kilowatt	Equivalent number of 60W electric lights per hour	Biogas consumption (m^3/hour) (1)	Number of gas lamps operati on this amoun biogas per hou
0.67	0.5	8	0.34	2.3
1.34	1.0	17	0.67	4.5
2.01	1.5	25	1.05	7.0
2.68	2.0	33	1.34	8.9
3.35	2.5	42	1.68	11.2
4.02	3.0	50	2.01	13.4
4.69	3.5	58	2.35	15.7
5.36	4.0	67	2.68	17.9
6.03	4.5	75	3.02	20.1
6.70	5.0	83	3.35	22.3

(1) Biogas consumption assumed to be 0.50m^3/BHP/hr.
(2) Gas lamp consumption assumed to be 0.15m3/hr (single mantle).

From Table 11, you can see that generating electricity is a more efficient use of biogas than using gas lights. For example, one Kilowatt-hour of electricity will operate 17 lights, each 60 watt, for an hour. The same amount of biogas would run only 4.5 single mantle (rated at the equivalent of 60W) gas lights per hour. For the user, electric light fixtures are also cheaper and easier to maintain than gas lamps. The disadvantage to generating electricity is the high capital cost of purchasing the engine, generator, and electric wiring, which can be especially expensive if the generator is not located close to the house. Small (less than 7.5KW), asynchronous generators are recommended for coupling with biogas engines because of their simple structure operation and ease of maintenance.

The biogas produced at Porus and Point Hill is slated to be used for electricity generation. At Porus, the gas production was estimated to be about 3.3-6.1m^3/day and at Point Hill, 6.9-13.0 (Table 5 -- Note: values multiplied by 1.5 accounting for the time to load and unload the batch unit). Using the gas consumption figures from Table 11, Porus has enough biogas to produce 4.93-9.10 Kilowatt-hours per day. Point Hill could produce 10.3-19.4 KWh per day. If you assume that biogas will also be used for cooking at each site, that 0.38m^3 biogas is consumed per person per day for cooking (Table 7), and each household cooks for 7 people each day, then Porus and Point Hill would consume 2.66m^3 biogas per day for cooking. The remaining biogas could produce 0.96-5.13 KWh per day at Porus and 6.3-15.4 KWh per day at Point Hill. Without knowing the exact rate of gas production it's impossible to specify the expected outputs more precisely.

One potential problem to keep in mind is the amount of biogas needed to run the engine. While the daily gas production may indicate that enough gas will be available to run the engine for a certain number of hours, all that gas must be available during a short amount of time. The gas holder must be able to store this amount. For example, at Porus total gas production is estimated at 3.3-6.1m^3/day. A two kilowatt engine generator will use all that gas in 2.5-4.6 hours (Table 11). How big a gas holder would you need? The biodigester produces between 0.14 and 0.25m^3 per hour (3.3-6.1m^3 divided by 24). In 2.5-4.6 hours it will produce 0.35-1.15m^3 biogas (0.14-0.25 X 2.5-4.6). Therefore the gas holder will need to have a minimum capacity of (3.3-6.1m^3/day) minus (0.35-1.15m^3) equals 2.15-5.75m^3. And it's always a wise idea to make your gas holder capacity a bit larger. The minimum gas holder capacity needed at Point Hill, using a 2.0 KW generator for 5.15-9.70 hours/day, would be 1.7-11.5m^3. This is quite a range because the storage size depends on daily gas production, size of engine and amount of time the generator is being used.

If the generator is not being used to its full capcity, the amount of biogas consumed will be less. For example, a 4.0 KW generator running for 3 hours would consume 4.0 KW X 0.67m^3/KW/hour X 3 hours or 8.04m^3 of biogas. If only 3 KW is being used, then the fuel required would be only 8.04m^3 X 3/5 or 4.82m^3. Below 50% of the rated power output of the generator there will not be any further significant savings. This rule holds true for all ICEs no matter what fuel is bieng used.

IV. Gas Connections and Distribution

1. Gas pressure in gas holder

Normally a pressure of 3-3.5" water gauge (75-90 mm) is sufficient to force the gas through the gas pipe and out of the gas applicance. The pressure is provided by the weight of the gas holder or, in Chinese type digesters, by the digester itself (gas pressure in Chinese digesters normally vary up to 40" water gauge, so few problems are experienced with inadequate gas pressure). If a gas holder is too light, weights may have to be added to it to achieve the desired pressure. To calculate the pressure exerted by a particular gas holder, the weight of the gas holder must be known. Since it is difficult to weigh it, the weight can be accura ly estimated by listing all the materials used to make it and refering to standard engineering handbooks for the weight per unit area or length. Once you know the weight, the gas pressure can be easily calculated as follows:

-- For this example, assume a gas holder of radius 1.0 meter and a weight of 200kg

-- Pressure $= \frac{\text{weight}}{\text{area}} = \frac{\text{kg}}{\pi R^2}$ kg/cm^2

$$= \frac{200\text{kg}}{\pi(1.0\text{cm})^2}$$

$$= 0.0064\text{kg/cm}^2$$

-- 1 kg/cm^2 = 10,000 mm water gauge

-- 0.0064 kg/cm^2 = 64 mm water gauge

This pressure is a bit too low, 85 mm would be more satisfactory. Therefore, weigl must be added to the gas holder equal to 85 - 64 or 21mm water gauge.

$$\text{Pressure} = \frac{\text{weight}}{\text{area}}$$

Therefore, weight = Pressure X Area

$$= \frac{21\text{mm}}{10000} \times \pi(100\text{cm})^2$$

$$= 66\text{kg}$$

If weights totalling 66kg are added to the gas holder, then the gas pressure will b 85mm water gauge.

2. Gas pipes, water traps, gas valves

Since biogas contains water vapor, care must be taken to drain water that condenses on the inside of the gas distribution pipe. A water condensate trap works well fo this purpose. To help the water drain, it's generally recommended that gas pipes slope gently--about a 1:100 slope (i.e. one foot rise per 100 feet pipe length) is best. The water trap should be located at the lowest point in the line and care taken that the pipe is flat. If the pipe is not flat, water will collect at each small depression in the line and could interrupt the flow of gas.

a. Type of pipe

(i) Plastic pipe. This should be buried underground. Otherwise, rodents may eat through it or it could be cut accidentally. Ultraviolet radiation from the seam can also degrade the plastic and shorten its life span. The plastic pipe should be flat so that water doesn't collect at depression points.

(ii) Galvanized pipe. This is commonly used although its price may be somewhat more than plastic pipe, depending on local conditions. Galvanized pipe can rust easily, especially in acidic soils. Several coats of paint or tar will solve this problem. Special care should be taken with the joints connecting two pieces of pipe--a good jointing compound should be used to seal the joint properly.

(iii) Copper tubing. This is by far the most expensive type of pipe. It is not recommended because of its high cost, although, if available, it holds up very well.

(iv) Flexible pipe joining gas holder to main gas line. This can be a troublesome spot where leaks often occur. If available, 5 ply rubber hose should be used. Black plastic water pipe, commonly available in many places, tends to crack easily (due to the sun's radiation) and may be difficult to join to a metal gas line. Clear plastic tubing tends to blacken, become brittle, and crack. In general, if you use plastic pipe in tropical areas, expect to replace this flexible pipe about once per year. Figure 24 shows an example of how the flexible pipe can be connected to the gas holder.

Figure 24

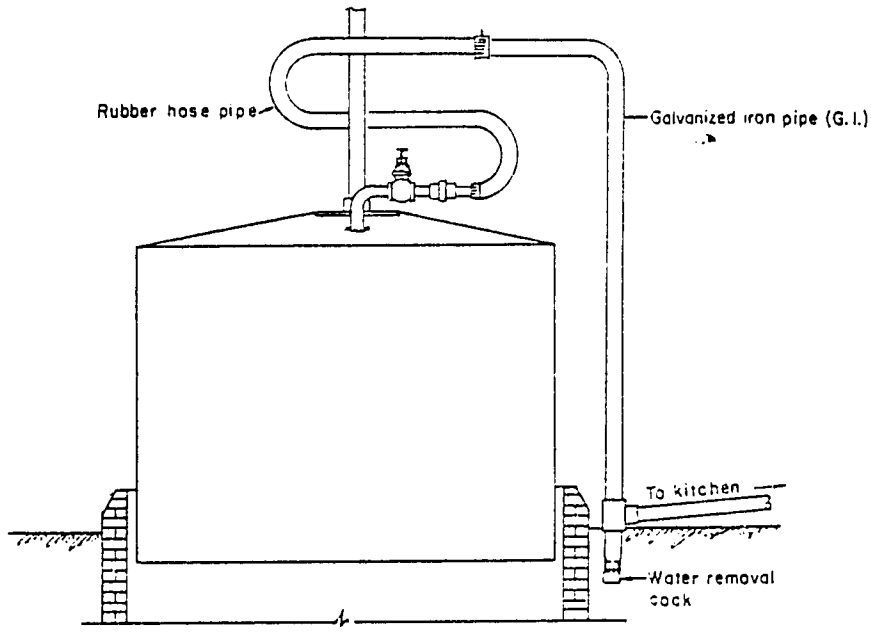

b. Water traps

There are many types of traps available. The type now being used in the OLADE program in the gas line connecting the digester with the gas holder are one good type. Other types of water condensate drains are shown in Figures 25-28.

Figure 25

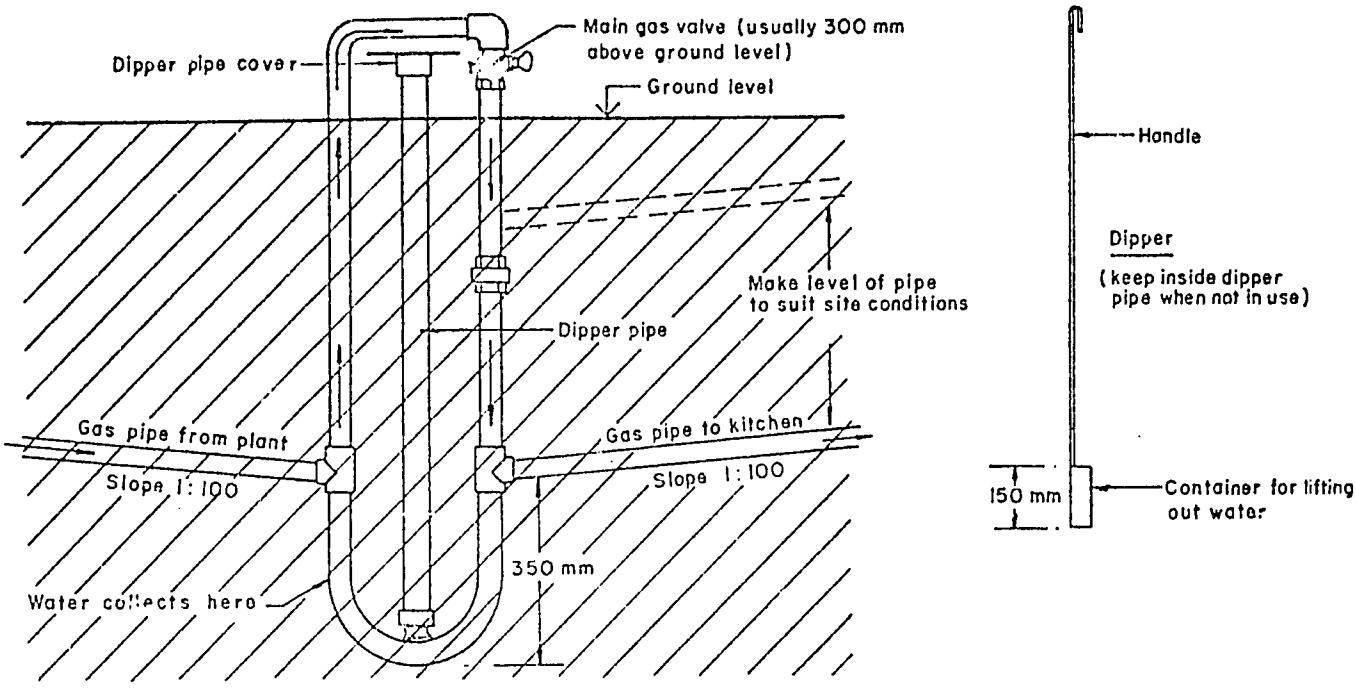

Figure 26

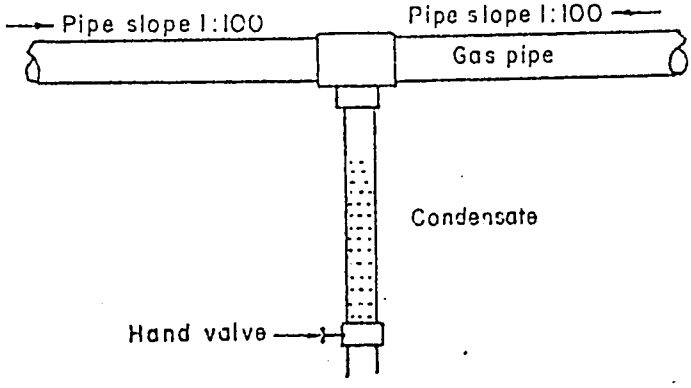

Figure 27

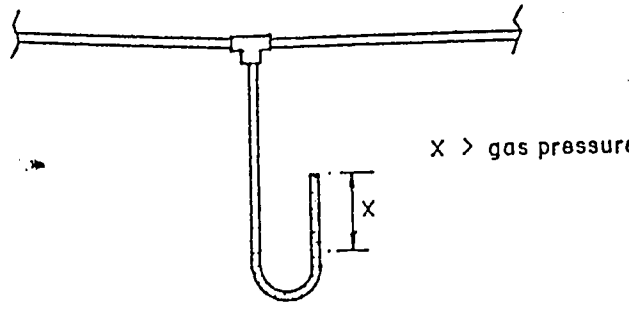

Figure 28

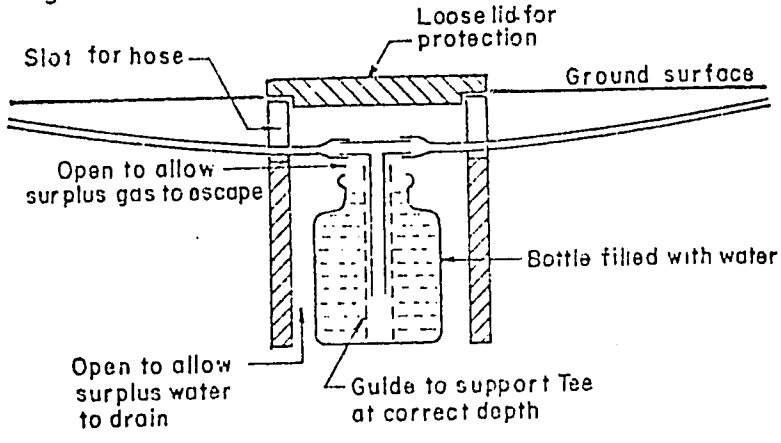

The water drain in Figure 25 is the most expensive type of those shown. It works best with underground gas lines, and requires about 1.4 litres of water to form a water seal in the bottom "U". The dipper is used to remove excess water. Since there is a water seal, the dipper pipe cover does not have to be tightly sealed.

The "T" shaped water trap in Figure 26 works well with above ground gas pipes or ones that are near ground level. Often a hole will have to be dug to accommodate the "T" drain. In areas of high rainfall, water and/or earth may fill up this hole. Therefore, it has to be cleaned out periodically.

The "U" shaped drain in Figure 27 is simple and works well. In dry areas, however, water in the drain may evaporate, causing gas leakage. Heavy rains can cause water to enter the open drain tube, especially if it is placed in an underground hole. This entering water can cause the water level to rise up into the gas line and block the flow of the gas.

The bottle drain in Figure 28 is self-operating and requires only occasional attention. Since it is set in a hole in the ground, it can overfill during heavy rains and block gas flow. In hot, dry areas excessive evaporation of the water in the bottle can cause gas leakage.

If the problems associated with each design are kept in mind, each of the condensate water drains will give trouble-free service.

c. Gas valves

The main gas valve should be located as near to the gas holder as possible. In fact, in cases where a flexible gas tube is connected to the gas holder, the main gas valve is usually joined to the gas holder directly (see Figure 24). Placing a gas valve so near to the gas holder (or digester in Chinese designs) is essentially a safety feature. If work is being done on the gas line, a gas valve near the digester will allow the gas to be easily turned off.

Ordinary water valves with plastic or leather washers should not be used as gas valves as there is normally insufficient gas pressure to operate them. Full way water valves can normally be used to shut off gas flow. Quarter turn gas valves, often cheaper than water valves, work very well. They should, however, be equipped with a spring to compensate for any wear experienced as the gas valve ages. Gas valves are often equipped with a nut that can be adjusted to take up this slack but this must be done manually, whereas a spring adjusts the valve automatically. If the gas valve is made of brass, be sure that it doesn't contain any lead--hydrogen sulphide in the gas will attack the lead and destroy the valve. Figure 29 shows three types of suitable gas valves for use in biogas distribution pipes. Figure 30 shows 4 possible configurations for placement of gas valves and water traps in gas lines of varying lengths.

Figure 29

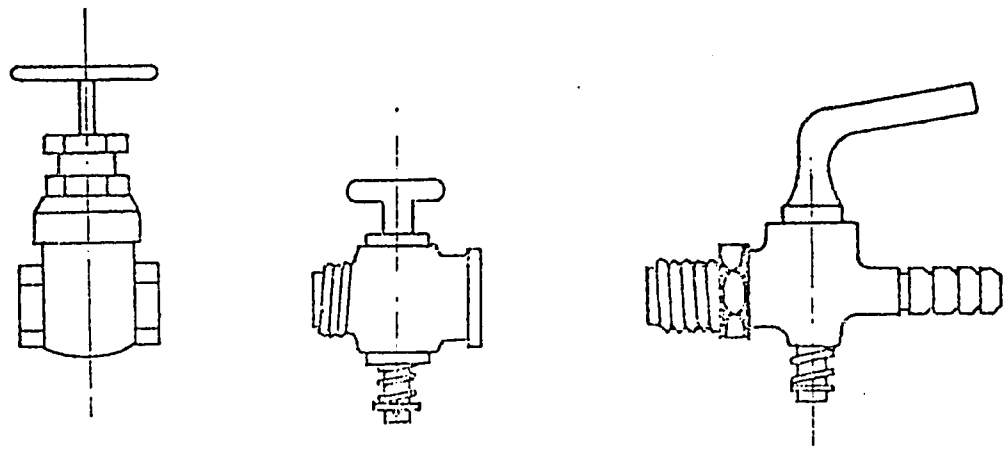

i)Full way valve ii)Main gas tap iii) Gas cock to suit rubber tube

3. Flame arresters

A flame arrester is a safety device which should be incorporated into every gas line. It is commonly paced near the digester just after the main gas valve or just before a gas appliance (light, stove, or refrigerator). It's safest to have one in both places. The purpose for a flame arrester is to prevent the flame from running back through the gas pipe to the gas holder and causing an explosion in case of an accidental back fire. Figure 31 shows two possible types.

Figure 31

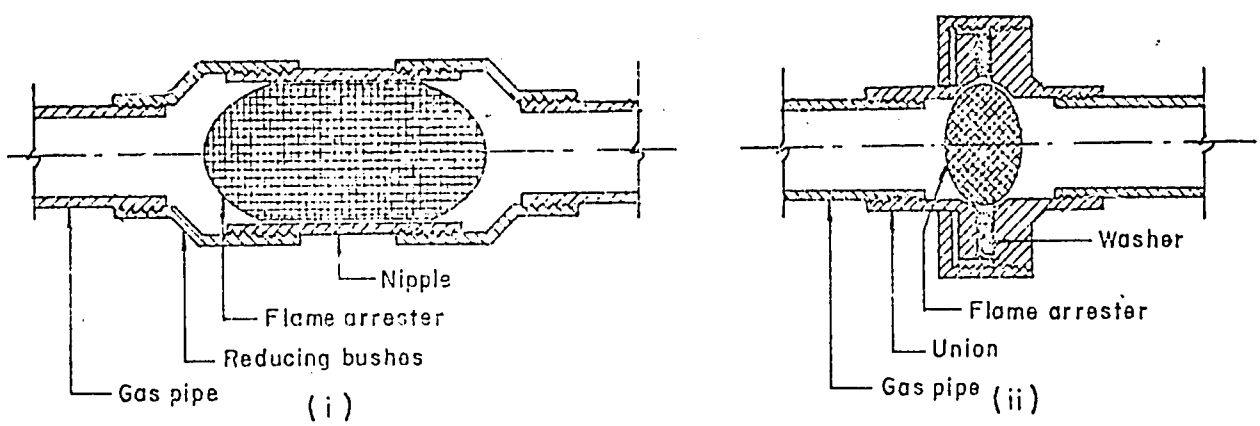

Figure 30

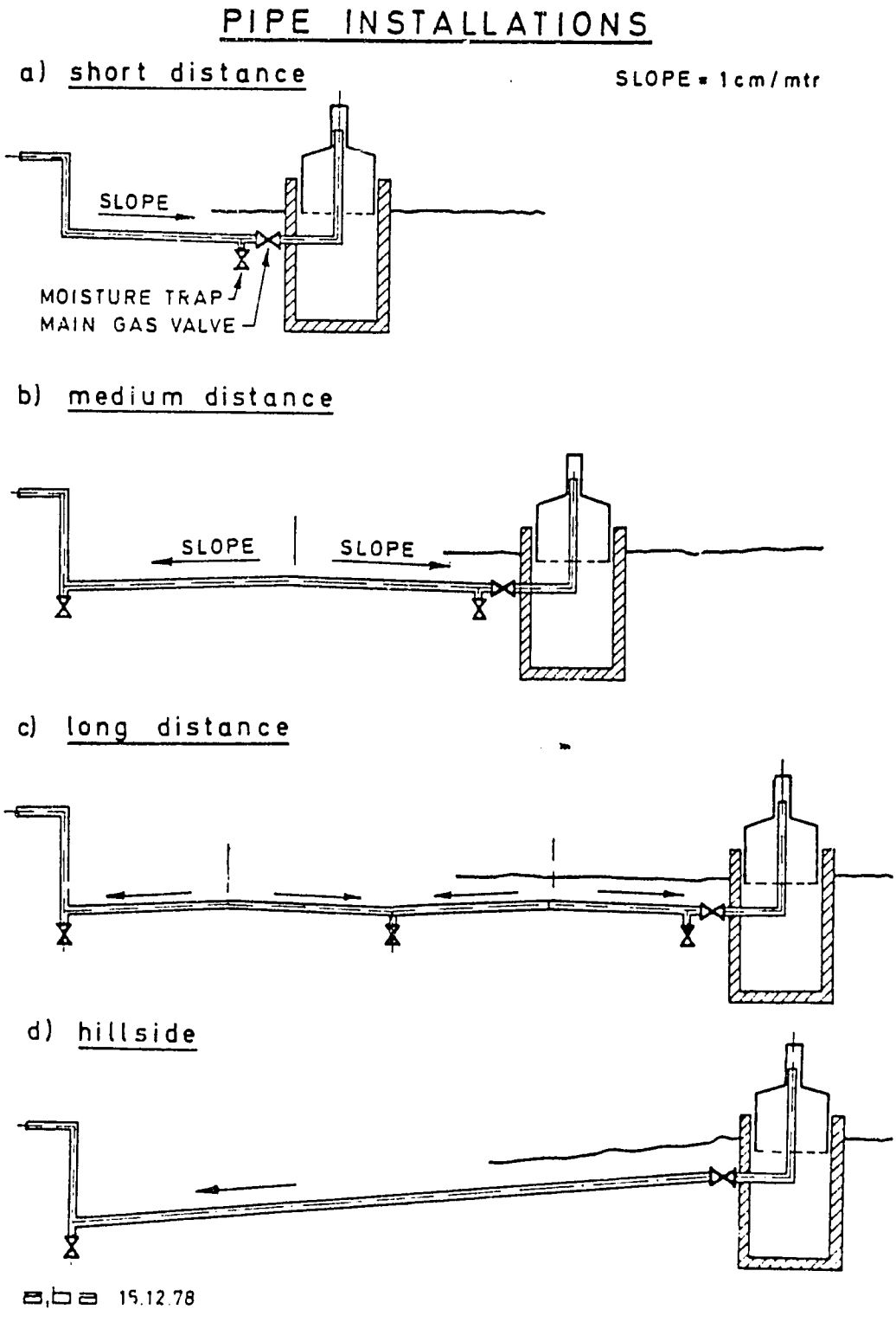
PIPE INSTALLATIONS
a) short distance
SLOPE = 1cm/mtr
SLOPE
MOISTURE TRAP
MAIN GAS VALVE
b) medium distance
SLOPE
SLOPE
c) long distance
d) hillside
15.12.78

The flame arrester is basically a ball of fine copper mesh (iron will work but it rusts too easily and is not recommended) inserted into a gas pipe. Since it forms an obstruction ot gas flow, it should be placed in a slightly larger pipe. For example, for a ½" (13mm) main gas pipe use a 3/4" (19mm) flame arrester; for a 1" (25mm) gas pipe use a 1¼" (32mm) flame arrester; for a 1½" (38mm) gas pipe usea 1 3/4" (44mm) flame arrester.

4. Manometers and safety valves

With digesters having floating gas holders, it's very easy to see what the approximate gas pressure is. If the gas holder is low, gas pressure is low and if the gas holder has risen up, so has the gas holder. In fact, if the gas pressure increases too much, the gas holder will rise high enough to allow gas to escape around the sides of the gas holder. Manometers are, therefore, not necessary.

Fixed dome digesters are more difficult to gauge. Since fixed dome digeste generate a higher pressure than ones with floating gas holders (fixed domes pressures up to about 40" water gauge; 3-5" water gauge with floating gas holders), the gas pressure should be monitored carefully to prevent it fror building up too high. A simple "U" tube manometer filled with colored wate works well (Figure 32).

If the gas pressure increases too high, the water in the manometer will be forced into Bottle "B". The outlet tube in the bottle is placed so that a the water can enter the bottle but not spill out. When the gas pressure is too high and all the water is in the bottle, the gas will bubble through th water and escape out the outlet tube. As pressure decreases, the water wil flow back into the manometer.

Figure 32

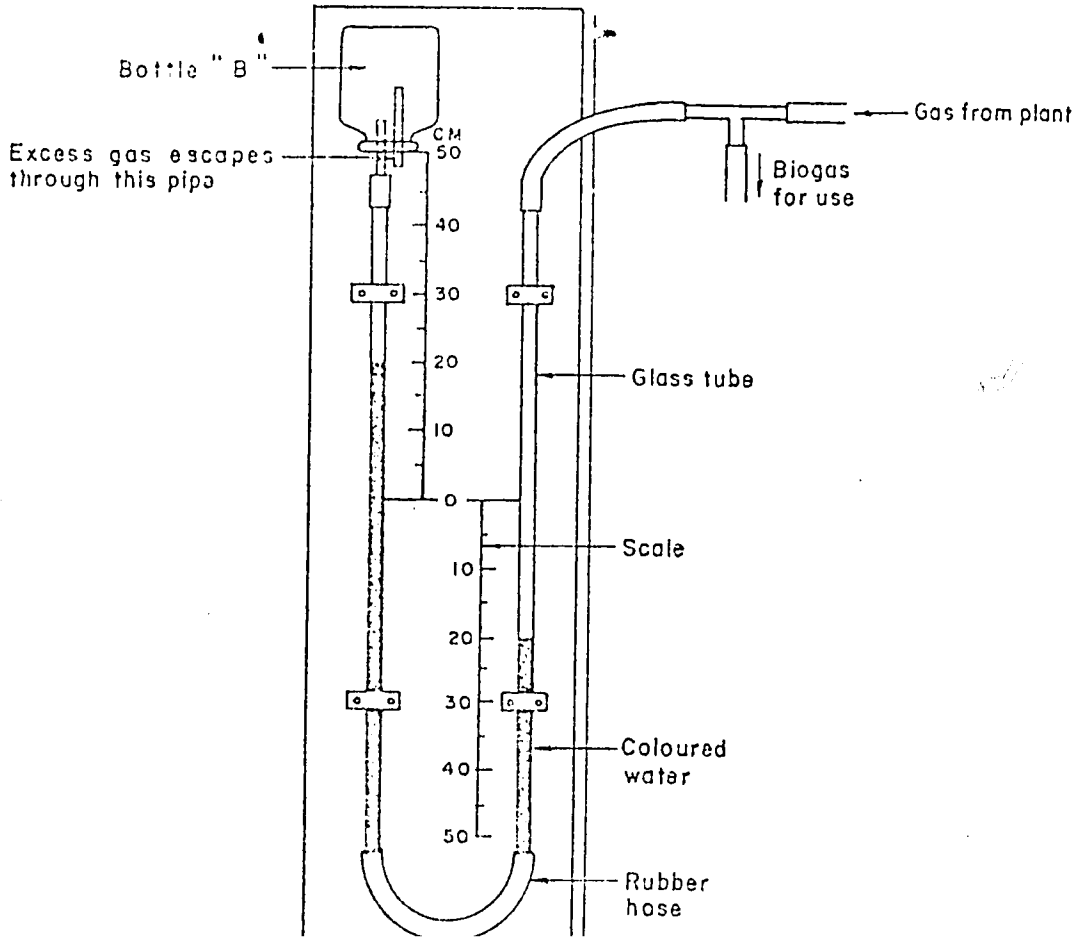

5. Gas pipe size selection

The size of the gas pipe needed to pipe gas to the point of usage depends on several factors: rate of gas flow, length of the pipe, and the allowable pressure drop. Since the gas pressure drop (due to frictional losses in the pipe) increases as the diameter of the pipe decreases, using a gas pipe that's too small will cause the gas pressure at the end of the pipe to decrease your costs. Therefore, the correct size of gas pipe required should be carefully calculated as follows:

(1) Estimate maximum gas demand. For example, a house has:

1 oven consuming .89m^3/hour = 0.89m^3/hr. (pg. 12)

4 burners consuming .33m^3/hr = 1.32m^3/hr.

2.21m^3/fr.

(2) Measure the length of the gas pipe needed, i.e. the distance between the gas holder and the gas appliance. For example, assume 15 meters.

(3) Refer to Figure 32 for determining pipe size. The point marked X on the figure corresponds to this example-- 3/4" pipe (inside diameter) is required.

Figure 33

Determining pipe diameter

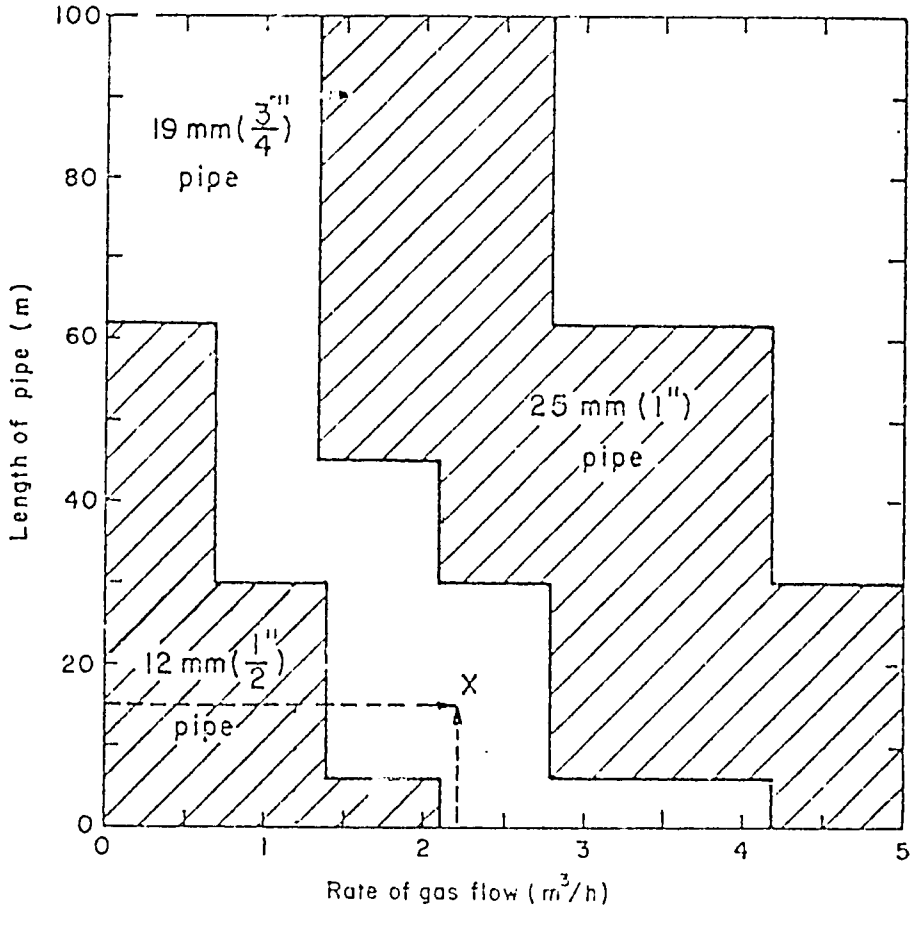

3/4" pipe need not be used the whole length of the pipe. It should be used to the point where the oven and burners are located. For branches leading to individual burners or other applicances ½" pipe can be used. All of the OLADE digesters, with the exception of the ELIM digesters, can use 3/4" pipe

The situation at ELIM is a bit different because the biogas digesters are located about 1200 feet from where the gas will be used. Poles' formula is used to calculate the size of pipe necessary:

$$Q = 1350 \sqrt{\frac{hd^5}{sL}}$$

where:
- Q = quantity of gas needed in cubic feet/
- d = diameter of the pipe in inches
- h = pressure drop in inches of water
- L = length of the pipe in yards
- s = specific gravity of biogas

Assumptions--pressure in the fixed dome to be 20 inches of water

-- A minimum of 4" water pressure needed to operate stoves (actually 3-3.5" water pressure is satisfactory but 4" used as a conservative estimate). Thus, the pressure drop is assumed to be 20-4 = 16" of water.

-- To calculate the specific gravity of the biogas, a 60% methane, 35% carbon dioxide mixture was assumed. Specific gravity is equal to $(\%CO_2)$ (0.015) X $(\%CH_4)$ (0.005).

-- Eight 6" burners were assumed to be used per hour or 180ft^3/hour. (from Table 7)

Therefore,

$$Q = 1350 \sqrt{\frac{(16)d^5}{(.84)\ (1200/3)}}$$

$$180 = 1350 \sqrt{.04762\ (d^5)}$$

$$180 = 1350\ (.2182) \sqrt{d^5}$$

$$d^5 = \frac{(180)^2}{(294.57)^2}$$

$$d^5 = 0.3734$$

$$d = 0.8212 \text{ inches}$$

1" diameter pipe should be used, to be on the safe side, as fluctuations in gas pressure or gas utilization may occur.

Effluent Utilization

The effluent from a biodigester can be even more valuable, in an agricultural area, than the biogas itself. In any successful biogas project the total integrated system should be considered carefully and planned accordingly. Biogas effluent makes an excellent fertilizer and one that can vastly improve agricultural output.

A. Effluent as fertilizer

Many people seem to believe that a biodigester will produce more fertilizer nutrients than the manure originally contained. This is a misconception. Some of the manure fed into the digester will be degraded by bacteria to form biogas and water. However, the effluent will be a more effective fertilizer than raw manure (Table 12), if the manure is not immediately used.

TABLE 12

The amount of nitrogen in cow dung

Field practice	*Nitrogen effectiveness Index (per cent)*
Dung spread and ploughed in immediately	100
Dung piled for 2 days before spreading and ploughing	80
Dung piled for 14 days before spreading and ploughing	55
Dung piled for 30 days before spreading and ploughing	50
Effluent from gas plant introduced immediately into irrigation water	100
Dried biogas plant effluent spread and ploughed . .	85

This is because the nitrogen contained in biogas effluent is in a readily accessible form for plants to use. Effluent contains nitrogen in the form of soluble ammonium compounds (and organic nitrogen too) that is more able to bind to clay and human particles and thus less apt to leach away. Biogas effluent, in general, makes a better fertilizer than aerobically composted organic wastes, which contains primarily oxidized forms of nitrogen--nitrates, nitrites. And in composting, more total nitrogen is lost before it can be spread on the fields.

Like compost, biogas effluent adds humus, supports microbiological activity in the soil, and increases the soils porosity and water holding properties, all of which add up to increased crop production. Recent information from China (Institute of Soil and Fertilizer, 1980) indicates that crops yields can be increased by using effluent for fertilizer (as compared to using sludge from an aerobic lagoon) by about:

Rice 6.5%
Maize 8.9%
Wheat 15.2%
Cotton 15.7%
Rape seed 10.6%

Unlike chemical fertilizers, which need to be applied annually, biogas effluent is effective over a period of three years /3/, as some of the available nitrogen in the effluent is released slowly to the soil.

Some soils respond better to effluent than others. The rate of application of effluent on a certain field will depend on its soil type. Open, porus soils--sandy or loamy--will generally respond better than silt or clay soils to effluent. The use of effluent encourages the growth of soil bacteria, which benefit the soil in many ways. However, if the soil becomes saturated or "clogged" by excessive application of effluent, slime organisms can begin to grow. Movement of water through the soil is reduced and carbon dioxide released by decomposing materials in the soil and the roots cannot escape the soil environment. Carbon dioxide (in the form of carbonic acid) causes the soil to become acidic.

Two ways to prevent or control soil clogging, which is a particular problem in silt clay soils, are by testing the soil pH and by plowing. If the soil pH increases, then the rate of effluent application should be decreased. Plowing breaks up the soil and will in general allow greater quantities of effluent to be applied. The real secret to using effluent as a fertilizer is to keep the soil open, so that carbon dioxide can be released and oxygen can enter the soil.

Effluent can be applied as a fertilizer in the following ways:

-- Liquid form. This can be taken in buckets and put on vegetable gardens, fruit trees, or cereal crops. It is a good idea, when introducing this in a new area, to use a portion of a plot or field as a control, i.e. do not add effluent to one section. The difference in yield from the two sections should be easily noticeable.

-- Diluted form. Effluent can be mixed with irrigation water and transported to the fields. Take care not to overfertilize one field and under-fertilize another.

-- Composted. Since slurry makes such a good composting material, this is a commonly used method. Bacteria in the slurry help break down other organic matter in the compost pile.

B. Other effluent uses

Much has been written about "totally integrated systems" in which the effluent is used to feed algae and fish ponds. The food produced by these is used to feed humans and animals. The waste products from the humans and animals can be digested to form biogas and the cycle repeated. The problem is that this integrated system is not easy. It requires a fair amount of technical expertise in many disciplines, careful coordination of all parts, and a fair amount of capital for it to succeed. If any part of the system fails, the scheme will not be successful. Thus, although an integrated system sounds attractive, it is not a feasible scheme for the average villager. Various components of this system are feasible, however, but the elements chosen will depend on locally available expertise.

-- Algae production: This is difficult; it needs good technical knowledge, very careful control and substantial capital. The algae produced can be used as a pig feed supplement. Specialized advice should be obtained before attempting to produce algae on a big scale.

--Animal feed: Slurry dried and processed to free it from parasites and patrogens. Used to replace a proportion of standard feed for pigs. Needs capital and control. Probably only suitable for big installations.

--Fish ponds: Easy, no processing, small capital required. Control simple. Only requires a small amount of slurry. Advice can be obtained from national fishery departments. (Nitrogen in the slurry encourages algae to grow. This in turn absorbs oxygen from the atmosphere. Oxygen is essential for the fish.) /3/

Specific information on how to establish any of the above technologies in conjunction with a biodigester are contained in Appendix 6-8.

C. Public health hazards

There is much concern about the heavy metal content and disease carrying organisms in the effluent. In a village situation, heavy metal concentration in the effluent is not a problem, unless industrial wastes are being used. The spread of disease, e.g. water-borne diseases, should be carefully looked at. This especially holds true if human waste is being added to the biodigester.

It's impossible to give exact figures concerning the effectiveness of anaerobic fermentation in reducing the number of disease-carrying organisms (DCO) in the effluent since it depends on several factors:

--Input material: the type and number of DCOs in the waste material added.

--Temperature: higher temperatures will kill more of the DCOs.

--Retention time: longer retention time kill more of the DCOs.

See Appendix 9 for further information on the effectiveness of anaerobic fermentation as a waste treatment process. It's certainly true that effluent contains far fewer DCOs than the input materials. One good way to further decrease the number of DCOs is to compost the effluent before applying it. This may not be practical if the effluent is used in a diluted form, carried in channels to the fields.

Gas production is but one part of an integrated anaerobic fermentation system. Effluent utilization, as fertilizer, animal feed, or in fish ponds, should be an integral component of any biogas scheme. The spreading of disease carrying organisms should not be overlooked. The entire biogas system requires daily attention and maintenance. The extent to which the various facets of the system--slurry loading and unloading, gas monitoring and usage, effluent utilization--are incorporated into the daily life of the farmer will determine the ultimate success or failure of the integrated system.

. The Jamaican Biogas Program

The OLADE funded biogas project has afforded the ED/MME the opportunity of evaluating the feasibility of biogas production in Jamaica. Various designs are being tested, biogas production in different climatic regions is being explored, cost estimates are being prepared, and the technical and construction problems are being worked out. The OLADE program will enable Jamaica to be technically capable of building biodigesters. Three other important questions remain to be evaluated--the economic viability, the social/cultural contraints, and how best to disseminate biogas technology.

For biogas technology to significantly spread throughout Jamaica it must be economical. Wealthier farmers will be able to afford a large capital investment and a long payback

period but the smaller farmer will not. An analysis of the constructions costs to build a digester, the cost of fuels (kerosene, butane, propane, diesel, etc.) the biogas repla the availability of loans and current interest rates, and an estimate of the projected p back period is needed. When biogas is proven to be economical, it stands a better chanc of being implemented on a large scale.

Social/cultural considerations are just as important as proving the technical feasibili of constructing biodigesters. The lifestyle of Jamaican farmers interested in implement biogas projects, in terms of their cooking habits, farming patterns, and their feelings about handling waste products should be explored. Integrating biogas technology into their daily routine is essential if biogas technology is to be promoted.

Now that the OLADE digesters are almost completed the question of how to proceed from 9 biodigesters to several thousand throughout Jamaica remains. Many countries have tried unsuccessfully to introduce biodigesters; China alone stands out as an excellent example of a country where biodigesters are popularly supported. There are several reasons for this:

-- There is a strong committment by the Chinese government to disseminating biogas techn logy.
-- Some of the materials used to construct biodigesters are subsidized by the government decreasing construction costs and the payback period.
-- There exists an organized framework for teaching people how to construct the biodiges themselves, thereby reducing labor costs.
-- Follow-up support by "district biogas officers" provides technical assistance when pr blems arise.

These elements are necessary if biogas technology is to be introduced on a wide scale. Follow-up support and community education are crucial. Farmers tend not to truely understand anaerobic fermentation. As soon as a problem occurs--a leak, stoppage of gas production--the farmer often has little idea how to solve the problem. The biodigester may sit for months before he figures out the solution. Or he may never be able to remedy th situation. In effect, a useless piece of equipment is created--a waste of time and mone

Community development units, proposed as part of the new MME/USAID energy program, may provide a possible solution. Extension workers could train interested tradesmen and farmers how to construct, operate, and maintain biodigesters. They could also provide follow-up technical support to solve problems as they arise, especially if they have acc to the expertise of the major biogas research organizations in Jamaica. Other local bio experts, such as Leon Cushnie, could be called upon to provide technical assistance. Mr. Cushnie is especially knowledgeable in adapting gas applicances--stoves, refrigerators, water heaters, and engines--to run on biogas.

Biodigester technology is certainly a good possibility for Jamaica. The OLADE program i proving that. The challenge that now presents itself is how to take the next step--dissemination of biodigesters throughout Jamaica. Careful study of economic constraints, social/cultural factors, planning of a biogas dissemination program, and development of an integrated biogas system (including utilization of the effluent) should be carried ou With these problems properly addressed and linkages established with the major biogas research organizations, biogas production can play a role in the reduction of oil imports and the conservation of forestry products.

BIBLIOGRAPHY

1. Ariane van Buren (editor), A Chinese Biogas Manual, Intermediate Technology Development Group (ITDG), 1979.

2. Gerhard Eggeling et al, Biogas Plants Building Instructions, German Agency for Technical Cooperation, 1980.

3. Economic and Social Commission for Asia and the Pacific (ESCAP), Guidebook on Biogas Development, Energy Development Series, No. 21, 1980.

4. Food and Agriculture Organization (FAO), China: Azolla Propagation and Small-Scale Biogas Technology, FAO Soils Bulletin No. 41, 1978.

5. John H. Finlay, Operation and Maintenance of Gobar Gas Plants, United Mission Economic Development Agency, 1976.

6. Jerry Friedberg, "Methane and Propane as Auto Fuels," Alternative Sources of Energy; December, 1976 pgs. 12-18.

7. John Fry, Methane Power Plants, Standard Printing, 1974.

8. D. House, The Complete Biogas Handbook, AT Home Everywhere, 1978.

9. Peter Fraenkel, The Power Guide, ITDG, 1980, pg. 201.

10. Kirloskar Oil Engines, Ltd., "Operation and Performance of Kirloskar Engines Running on Biogas," 1980.

11. Michael McGarry and Jill Stainforth; Compost, Fertilizer and Biogas Production from Human and Farm Wastes in the Peoples' Republic of China, International Development Research Centre, 1978, pgs. 71-83.

12. National Academy of Sciences, Methane Generation from Human, Animal and Agricultural Wastes, 1977.

13. Neyerloff and Gunkel, "Methane-Carbon Dioxide Mixtures in an Internal Combustion Engine," Energy, Agriculture and Waste Management, pg. 397.

14. ONAN,"Use of Gaseous Fuel with ONAN Electric Generating Sets," Technical Bulletin T-015, 1972.

15. G.L. Patanikar, "Gobar Gas Distribution," Khadi and Village Industries Commission, 1976.

16. Chung Po, "Swine Wastes and Methane," Joint Commission on Rural Reconstruction, 1976.

17. M.A. Sathianathan, Bio-Gas Achievements and Challenges, Association of Voluntary Agencies for Rural Development, 1975.

18. B. Saubolle and A. Bachmann, Fuel Gas from Cowdung, Sahayogi Press, 1980.

19. C.C. Turner, The Bottled Gas Manual, Jenkins Publications, 1946.

20. Robert Wolf, "Comments on Atmospheric Gas Burner Design," private correspondence, 1980.

WORLD HEALTH ORGANIZATION
ORGANISATION MONDIALE DE LA SANTÉ

APPENDIX 1

EPI/CCIS/79.5

ORIGINAL: ENGLISH

SUMMARY OF VACCINE REFRIGERATOR TESTING: CONSUMERS' ASSOCIATION: UNITED KINGDOM

Expanded Programme on Immunization

Tests[1] are complete on nine types of refrigerator for the storage of vaccines. Table 1 summarizes the results. Performance tests were carried out at continuous external temperatures of +32°C and +43°C and a "daytime - night-time" cycle of +43°C/+15°C. The refrigerators were loaded with vaccines and icepacks as shown in Figure 1.

Illustrations of the samples and addresses of the manufacturers appear in Annex 1.

General Observations:

Two types of refrigerator (samples 4 and 9) are suitable for storing vaccine at central or regional stores but only one refrigerator (sample 1) has a satisfactory performance and suitable icemaking facilities for use in district stores. Kerosene refrigerators do not have thermostats to control the internal temperature. Their performance is therefore highly dependant on fine adjustment of the wick and availability of high grade, clean fuel.

Bottled gas powered refrigerators have a thermostatic flame control which provides partial control of the internal temperature and the burner is nearly maintenance free. For this reason, gas powered refrigeration is strongly recommended over kerosene if electricity is not available.

Extensive modification experiments were conducted to discover whether adaptations to some of these refrigerators could satisfactorily improve their performance. This experimental work is discussed in another EPI document, but sample 9 is a new product designed on the basis of test results from this work.

1. Absorption Type Refrigerators:

Samples:	1	Electrolux, RAK 100	(kerosene)
	2	Electrolux, RAK 66	(kerosene)
	3	Electrolux, RAK 36	(kerosene)
	4	Electrolux, RC 65	(gas or kerosene)
	7	Sibir, Tropic	(electricity)

[1] Contract references Z9957/V and EL/At 10.79

The issue of this document does not constitute formal publication. It should not be reviewed, abstracted or quoted without the agreement of the World Health Organization. Authors alone are responsible for views expressed in signed articles.

Ce document ne constitue pas une publication. Il ne doit faire l'objet d'aucun compte rendu ou résumé ni d'aucune citation sans l'autorisation de l'Organisation Mondiale de la Santé. Les opinions exprimées dans les articles signés n'engagent que leurs auteurs.

Figure 1: Refrigerator loading

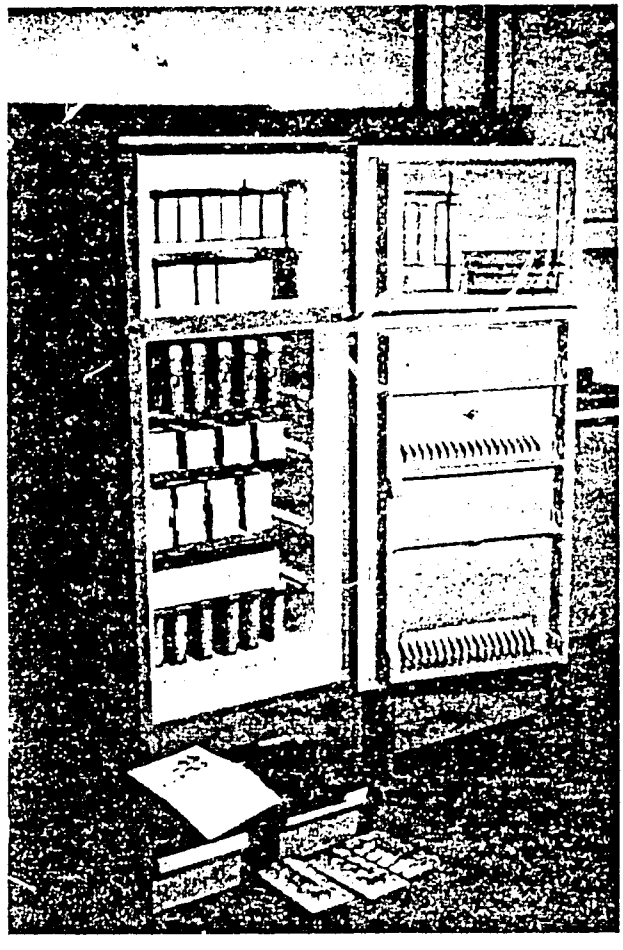

The Electrolux RC 65, is capable of maintaining vaccine storage temperatures at a continuous external temperature of +43°C and, when operating on gas it can control the internal temperature effectively even when daytime and night-time temperatures vary between 43°C and 15°C The vaccine load also remains cool for 40 hours after power failure. This is the highest performance recorded among this group of samples, yet the RC 65 would use about 75 litres of kerosene or 45 kgs of LP Gas per month. This high fuel consumption, the high vaccine storage capacity and the lack of an icemaking compartment suggests that the RC 65 should be used at stores, operating where possible on LP Gas. The LP Gas version has a thermostatic flame control device which makes it easier to control at refrigerator temperatures than the kerosene version. The RC 65 can be run as a refrigerator or as a freezer by adjusting the flame height. In the regional store therefore one may be run at -18°C containing live vaccine or icepacks, while a second may be run as a refrigerator.

The Electrolux RAK 100 maintains vaccine storage temperatures during daytime night-time fluctuations in temperature from +43°C to +15°C, and during continuous outside temperatures of 32°C. The RAK 100 cannot, however, be used for vaccine storage in a continuous external temperature of +43°C and it is calculated that +35°C would be the maximum external temperature in which it would continue to operate effectively for vaccine storage.

The Sibir Tropic had excellent performance under all tests when empty but, because of certain design characteristics, the internal temperature differences when loaded with vaccine are excessive, and the refrigerator cannot be recommended for vaccine storage in tropical conditions. It is calculated that the Tropic could be used for vaccine storage at temperatures below +27°C.

The Electrolux RAK 66 and RAK 36 can maintain vaccine storage temperatures of 32°C and it is calculated that 35°C would be the maximum temperature in which it could be effectively used.

All the tests were carried out with clean, high grade kerosene and the results could not be repeated with low grade or polluted fuel which is frequently supplied in rural areas of EPI countries.

2. Electric Compression Type Refrigerators:

Samples:
5 Expo Machinery, Tropicana 113
6 Merloni, Ariston TDF 280
8 Gelomatic, Medinic
9 Electrolux, TC 1150 (modified)

The Electrolux TC 1150 with ice-lining has the highest performance of this group of refrigerators and is suitable for vaccine storage in external temperatures of 43°C, and with a daytime night-time range of +43°C to +15°C. The TC 1150 is economical to operate and has 40 hours of safe vaccine storage after power failure and is, therefore, a good choice for vaccine storage at regional level where electricity may vary in voltage, or may be interrupted each day for periods of up to 16 hours. A separate freezer would be required for storage of live vaccines at -20°C and for freezing quantities of icepacks. A dial thermometer is supplied with this refrigerator and tests have confirmed that it is accurate to ±1.8°C. The equivalent type now available from Electrolux is TCW-1150.

The Gelomatic, Medinic has satisfactory internal temperature control at +32°C and during daytime night-time variations of +43°C to +15°C but has a very short period of safe vaccine storage after power failure. The small vaccine capacity suggests that its main use would be in district centres. However, it has no icemaking facilities which are normally required for vaccine carriers used at district centres. The thermometer was tested and is accurate to within ± 1.5°C.

The Expo Machinery, Tropicana 113 has certain design characteristics which result in a wide difference of internal temperatures which suggest that it is not suitable for vaccine storage. However, if only the top four shelves of the refrigerator are used for vaccine, it has acceptable performance at +32°C and +43°C.

The Merloni Ariston TDF 280 is not suitable for vaccine storage in tropical climates due to the wide temperature distribution in the refrigerator compartment.

K E Y

Column	Title	Notes
1	Fuel source	K = Kerosene G = bottled gas E = 220 volts AC electricity supply E* = 110 volts AC 60 cycle electricity supply
2	Litres usable vaccine capacity	Net volume in litres available inside refrigerator for vaccine or icepacks used for temperature control
3	Front, top opening/ No. of doors	Front door or top lid with or without separate access to a freezing compartment
4	MAX/MIN internal temperature °C	Lowest and highest internal temperature of the vaccine load - thermostat set at its maximum position and stabilized in an ambient temperature of 32°C
5	Hours to rise to +10°C	The measured rate of temperature rise from minimum internal temperature to +10°C - so "0" hours if the minimum internal temperature is already above 10°C. Test at +32°C
6	Icemaking, kgs per 24 hours	Weight of ice made at +32°C ambient in icepacks. ND = Not determined during the current series of tests
7	Fuel or power consumed in 24 hours	KWh = Kilowatthours per 24 hours KG = Kilograms LP Gas per 24 hours L = Litres kerosene per 24 hours
8	MAX/MIN internal temperature °C	Maximum temperature reached after 12 hours at +43°C, and minimum temperature reached after 12 hours at +15°C with constant, full vaccine load and thermostat at the maximum setting, during four 24 hour cycles
9	MAX/MIN internal temperature °C	Lowest and the highest internal temperatures of the vaccine load - thermostat set at its maximum position and stabilized in an ambient temperature of 43°C
10	Hours to rise to +10°C	The measured rate of temperature rise as noted in "5", but in an external ambient temperature of 43°C
11	Fuel or power consumed in 24 hours	Power consumption as noted in "7", but in an external ambient temperature of 43°C
12	Litres gross internal volume	Measured gross internal volume of refrigerator
13	Litres icemaking compartment	Measured gross internal volume of freezing compartment
14	Thermometer supplied	Dial type or stem type thermometer supplied with refrigerator
15	Lock fitted	Integral lock and key supplied

	Make/Model/Type	Fuel source	Litres usable vaccine capacity	F - front opening / T - top opening / No. of doors	32°C AMBIENT				43°C/15°C AMBIENT	43°C AMBIENT			Litres gross internal volume	Litres icemaking compartment	Thermometer supplied	Lock fitted
					MAX/MIN internal temperature °C	Hours to rise to +10°C	Icemaking kgs per 24 hours	Fuel or power consumed in 24 hours	MAX/MIN internal temperature °C	MAX/MIN internal temperature °C	Hours to rise to +10°C	Fuel or power consumed in 24 hours				
		1	2	3	4	5	6	7	8	9	10	11	12	13	14	15
1	ELECTROLUX RAK 100 (Absorption)	K	105	F/2	+7/0	9	4	1.0 L	+10/0	+16/+11	0	1.6 L	144	41	NO	YES
2	ELECTROLUX RAK 66 (Absorption)	K	40	F/1	+4/0	10	2	0.7 L	+20/15	+15/+8	7	0.6 L	88	10	NO	YES
3	ELECTROLUX RAK [illegible] (Absorption)	K	22	F/1	+6/+2	6	1	0.6 L	+15/-5	+18/+13	0	0.4 L	57	7	NO	YES
4	ELECTROLUX RC 65 (Absorption)	G	142	T/1	-9/-19	25	0	0.9 KG	+3/-3	+2/-8	14	1.5 KG	142	0	NO	YES
		K	142	T/1	-9/-18	25	0	1.8 L	-10/-19	+3/-5	14	2.5 L	142	0	NO	YES
5	EXPO MACHINERY Tropicana 113 (Compression)	E	128	F/1	+14/+1	12	7	1.8 KWH	+11/-8	+22/+6	5	3.4 KWH	155	30	NO	YES
6	MERLONI Ariston TDF 280 (Compression)	E	143	F/2	+20/+8	2	ND	2.0 KWH	ND	+25/+7	2	3.0 KWH	177	53	NO	NO
7	SIBIR Tropic (Absorption)	E	102	F/2	+15/+4	6	ND	4.1 KWH	+7/-2	+27/-1	2	5.2 KWH	117	29	NO	NO
		K			← NO TEST →											
8	GELOMATIC Medinic (Compression)	E*	20	T/3	+8/+2	3	0	0.4 KWH	+7/+2	+11/+5	1.5	0.9 KWH	30	0	YES	NO
9	ELECTROLUX TC 1150 (Compression)	E	190	T/1	← NO TEST →				+6/0	+6/0	40	1.9 KWH	190	70	YES	YES

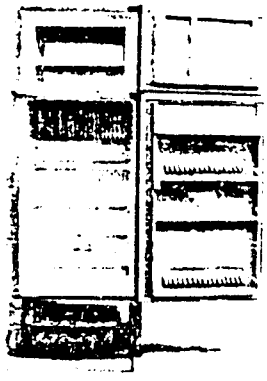	RAK 100	AB Electrolux S-10545 Stockholm Sweden
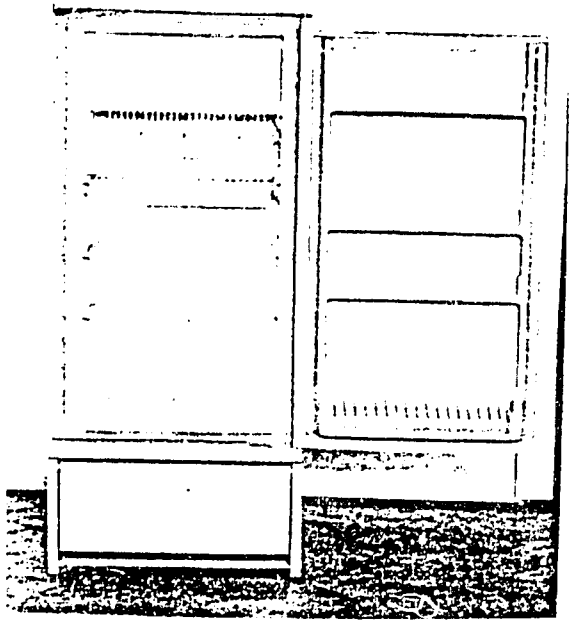	2 RAK 66	AB Electrolux S-10545 Stockholm Sweden
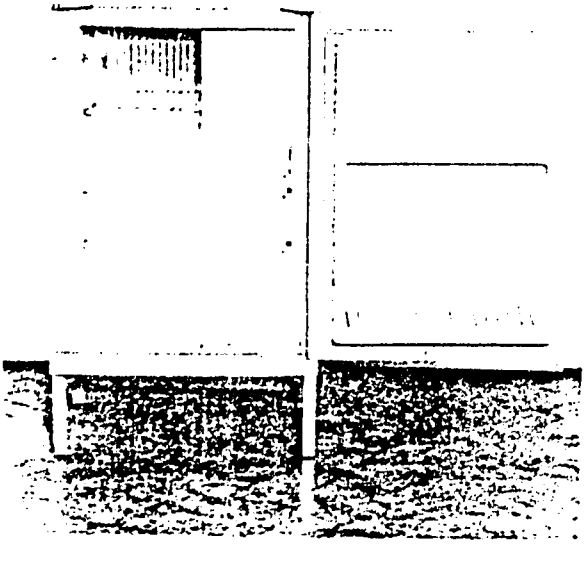	3 RAK 36	AB Electrolux S-10545 Stockholm Sweden

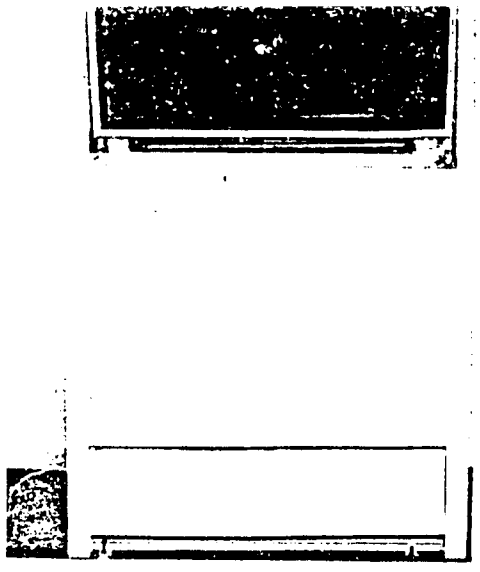	RC 65 (GAS OR KEROSENE)	AB Electrolux S-10545 Stockholm Sweden
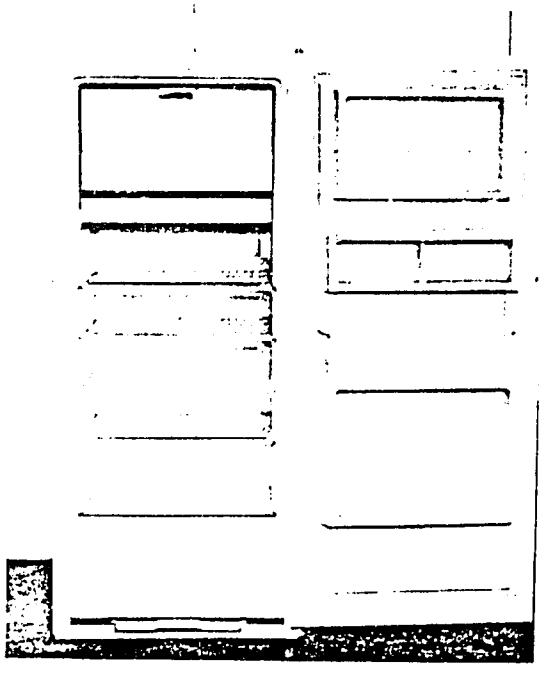	5 TROPICANA 113	Expo Machinery Ltd. 19A Alipore Road New Delhi - 110006 India
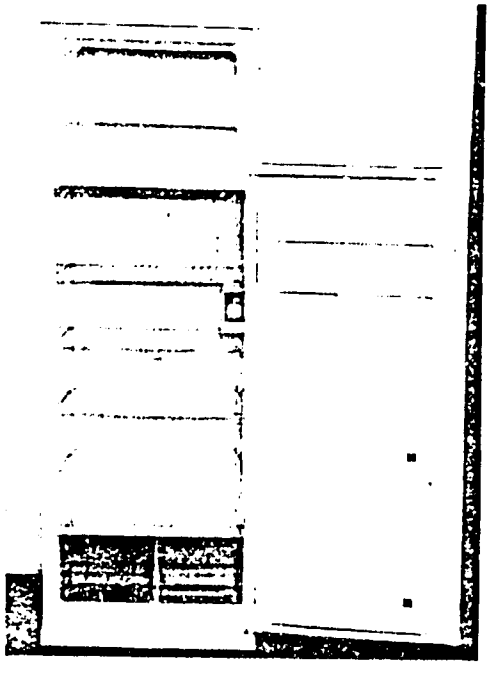	6 ARISTON TDF 280	Industrie Merloni Fabriano Italy

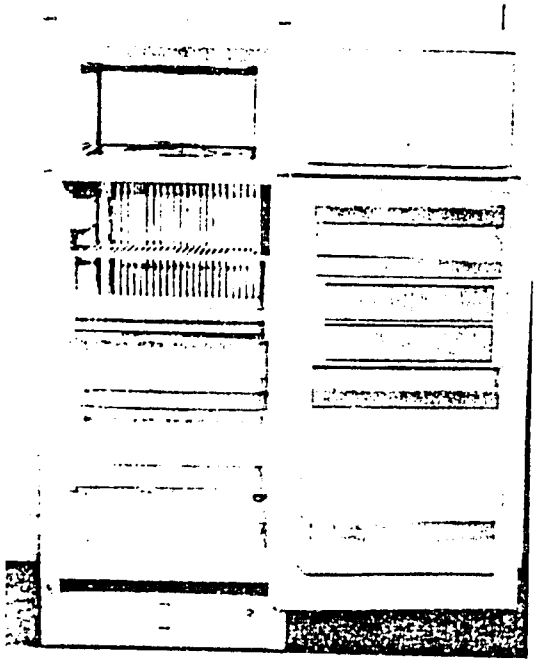	7. TROPIC	Sibir SA Külapparate GmbH 8952 Schloeren Switzerland
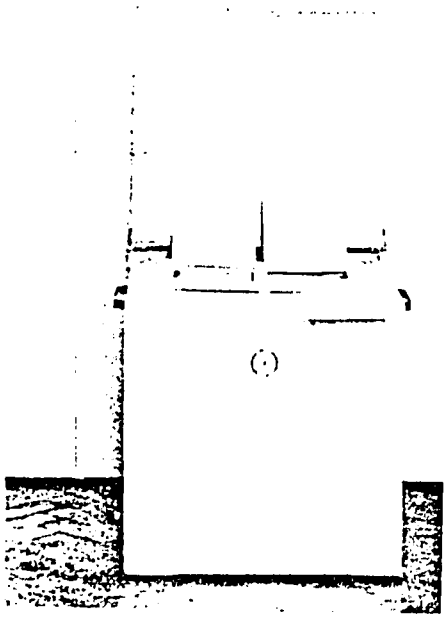	8 MEDINIC	Refrigerator Eléctrico Gelomatic Av. José Pereira Lopes, 250 S. Carlos - S. Paulo Brazil
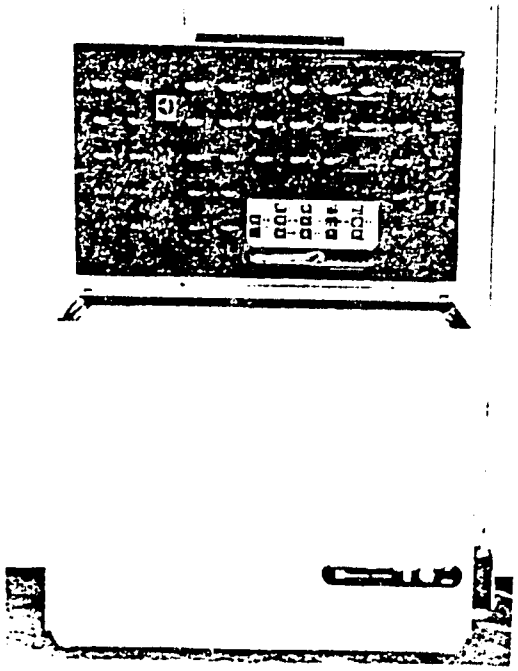	9 TC 1150	AB Electrolux Division for Special Products Luxbacken 1 Lilla Essigen S-10545 Stockholm Sweden

APPENDIX 2 XVIII-CE-4, P2

Operation & Performance of Kirloskar Engines Running on Bio-gas

67

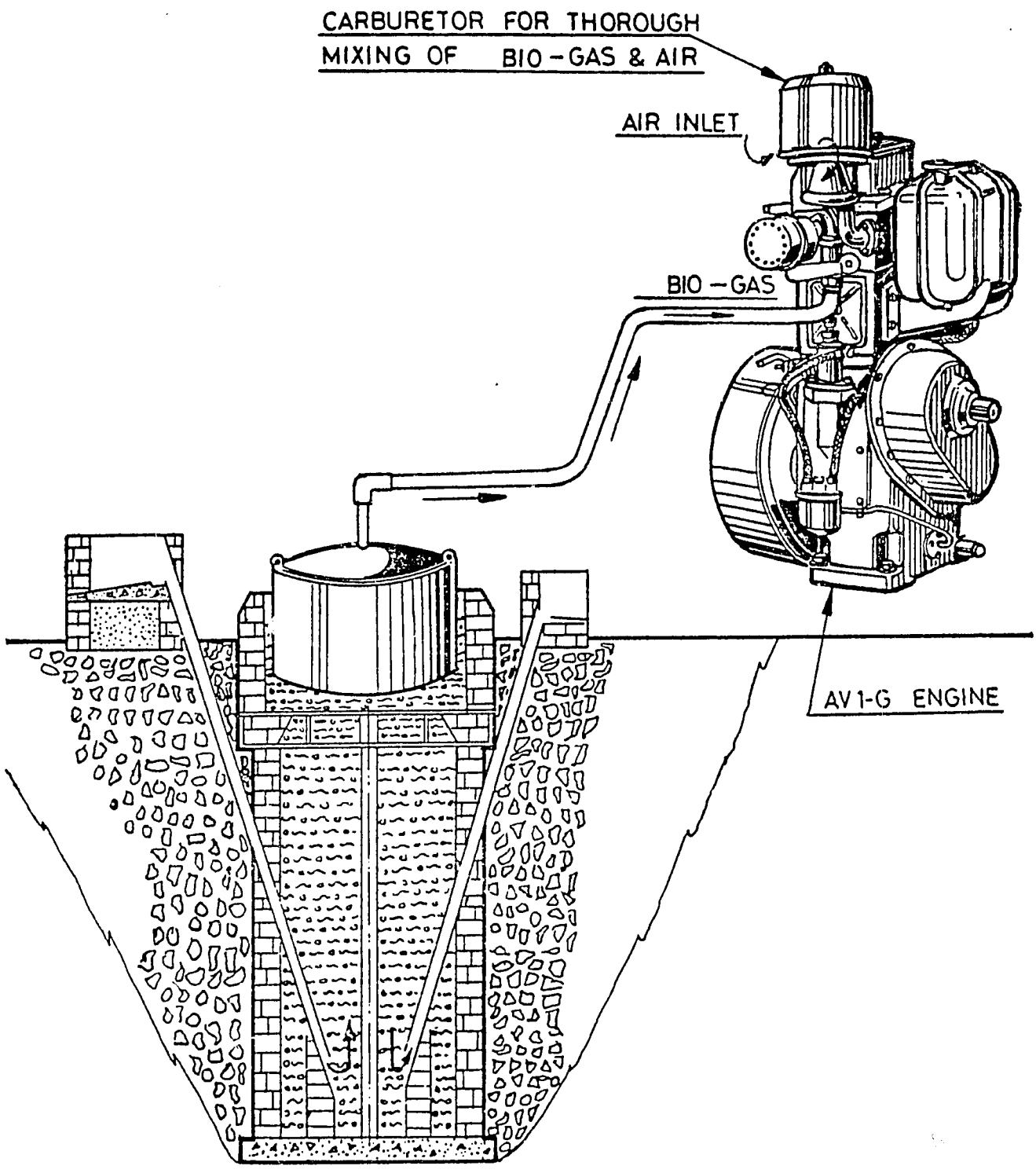

KIRLOSKAR BIO – GAS DUAL FUEL ENGINE

FIG.-1

KIRLOSKAR OIL ENGINES LIMITED
MARKETING DIVISION

DUAL FUEL BIO-GAS ENGINE SERIES DEVELOPED BY M/s. KIRLOSKAR OIL ENGINES LTD., PUNE (INDIA)

1.0) INTRODUCTION

Considering the world-wide shortage of energy and with a view to utilise Methane produced in bio-gas plants for developing power and thus to save the consumption of fossil fuels Kirloskar Oil Engines Ltd., Pune (India) began a programme of development of bio-gas dual fuel engines in 1976. The first engine developing five horsepower 1500 RMP. was released commercially in June, 1977. Since then other engines have been developed both in water-cooled and air-cooled versions; and now Kirloskar Oil Engines can offer bio-gas engines upto 75 horsepower, specifications of the various Kirloskar bio-gas engines are given in table 2.

2.0) DESIGN FEATURES

All these engines were so designed that when bio-gas is available, engine will utilise bio-gas for developing power. When the bio-gas is exhausted or when the engine is to be run where the bio-gas is not available it will work on diesel. When running on bio-gas, nozzle and the fuel pump of the engine is used to create pilot diesel spray in combustion chamber to initiate the combustion of bio-gas. A special carburettor is designed for effective and thorough mixing of bio-gas and air before admitting the mixture into the combustion chamber of the engine.

3.0) ENGINE CHARACTERISTICS

Dual fuel bio-gas engines when running on full load consume about 15% of diesel, rest of the energy being obtained from methane in bio-gas. Typical test results on five horsepower 1500 RPM. engine when running on dual fuel are mentioned in Table No. 1, performance at part loads is also specified. Figure 2 illustrates typical power curve of dual fuel engine. Curve (a) represents specific fuel consumption when working only on diesel. While curve (b) represents specific diesel fuel consumption when the engine is working on dual fuel i.e. on diesel and bio-gas. Horse-power developed, torque developed remain the same in both the cases when working purely on diesel or when working on diesel and bio-gas.

4.0) SPECIAL FEATURES OF BIO-GAS ENGINE

Comparative study was made with engine running on diesel alone and running on diesel + Bio-gas for different engine parameters like.:

i) Exhaust smoke density
ii) Exhaust gas temperature
iii) Engine deposits
iv) Effect on lubricating oil etc.

4.1) Exhaust Smoke density

Exhaust smoke density of the engine decreases when the engine is running on bio-gas than when it is running fully on diesel.

Figure 3 compares the smoke density at different loads with operation on diesel and on bio-gas + diesel.

4.2) Exhaust gas Temperature

Exhaust gas temperature of the engine exhaust remains almost the same in both the cases when it is running on diesel and when running on bio-gas.

4.3) Engine Deposits

For comparison two engines were run simultaneously, one on diesel and the other on bio-gas for hundred hours. General engine cleanliness with bio-gas was found better than the diesel operation. Rocker box cover, cylinder liner, valve guides were found cleaner than the diesel operation.

4.4) Effect on lubricating oil

After hundred hours lubricating oil of both the engines was compared. Lubricating oil with bio-gas operation was much more clean. Detailed chemical analysis is being carried out.

5.0) SPECIFICATIONS OF DIFFERENT ENGINES RUNNING ON BIO-GAS

Engines working on bio-gas both in water-cooled and air-cooled versions are available. Technical specifications of water-cooled series engines are mentioned in Table No. 2 and for air-cooled engines in Table No. 3.

6.0) APPLICATION OF BIO-GAS ENGINE

Kirloskar bio-gas engines can be used as a prime movers for Pumpsets, Generating sets Threshers, flour mills and other Agricultural applications etc.
Pumpsets for low, Medium and High heads are available, proper Selection of the pump can be done knowing the duty points. Generating sets up to 9 KVA capacity are available.

For any further enquiries please write to:

Messrs
Kirloskar Oil Engines Ltd.
Laxmanrao Kirloskar Road,
Khadki, PUNE 411 003.(INDIA)

Test Report of 5 H. P. Kirloskar AVIG Engine at 1500 RPM

TABLE-1

SR. NO.	SPEED R. P. M.	HP (AS PER BS 649)	TIME FOR 50 cc OF DIESEL WHEN ON DIESEL SECONDS	TIME FOR 50 cc OF DIESEL WHEN ON DIESEL + GAS SECONDS	SFC OF DIESEL WHEN ON DIESEL g/BHP-h	SFC OF DIESEL WHEN ON DIESEL + GAS g/BHP-h	RATIO OF SFC OF DIESEL WHEN ON DUAL FUEL TO WHEN ON DIESEL %
1	1520	1.27	350	1500	344	79	23
2	1520	2·54	241	1680	250	35	14
3	1520	3.8	189	1650	210	24	11.4
4	1500	5	162	1120	185	26.8	14.5
5	1500	5.5	144	1000	190	27.26	14.35

66

SPECIFICATIONS OF BIO-GAS ENGINES
WATER COOLED SERIES
TABLE-2

Description	AV1 G	AV2 G	TV1 G	TV2 G
Bore (mm)	80	80	80	80
Stroke (mm)	110	110	110	110
Piston displacement (cm^3)	553	1106	661.53	1323.06
Number and arrangement of cylinders	1 vertical	2 vertical	1 vertical	2 vertical
Working cycle	4 storke dual fual (Diesel + Bio-gas)			
Compression ratio	16.5:1	16.5:1	17.5:1	17.5:1
Direction of rotation (Facing flywheel)	clockwise/Anticlockwise			
Maximum speed (RPM)	2000	2000	2000	2000
Minimum idle speed (RPM)	750	750	750	750
Minimum operating speed (RPM)	1200	1200	1200	1200
Cooling system	Water cooled			
Lubricating system	Forced feed gear pump			
Overall dimensions				
Length (mm)	617	785	615	785
Width (mm)	504	527	504	527
Total height (mm)	744	825	744	825
(I) Height 'A' (mm)	540.8	621.8	540.8	621.8
(II) Height 'B' (mm)	203.2	203.2	203.2	203.2

Note : I) Height 'A' is distance of top from crankshaft centre line
II) Height 'B' is distance of bottom from crankshaft centre line

Cont...

61

Description	AV1 G	AV2 G	TV1 G	TV2 G
Total weight (without flywheel) kgs.	127	180	127	183
Continuous rating as per B. S. 649 B. H. P. (At 2000 PRM)	6.6	13.2	8.7	17.4

Maximum torque	1400		1150	
(In kg/m)	2.42	4.84	3.60	7.20
(In lb / ft)	17.5	35	26	52
Brake mean effective Pressure :				
(In kg/cm²)	5.5	5.5	6.80	6.80
(In lb / in²)	78.2	78.2	97.15	97.15

Intermittent rating as per B. S : 649 B. H. P. (At 2000 RPM)	7.25	14.5	9.57	19.15

Maximum torque	1400		1150	
(In kg/m)	2.66	5.32	3.93	7.86
(In lb / ft)	19.25	38.5	28.6	57.2
Brake mean effective Pressure :				
(In kg/cm²)	6.04	6.04	7.5	7.5
(In lb / in²)	85.9	85.9	106.6	106.6

Specific fuel consumption at fuel load when fully on diesel (gms/bhp-hr)	199.32	199.32	183.465	183.465
Specific fuel consumption at full load of diesel when on dual fuel (gms/bhp-hr)	29.898	29.898	27.5197	27.5197
Bio-gas requirement for dual fuel (m³/bhp-hr)	0.424755 (15 Cubic feet/bhp-hr)			

68

SPECIFICATIONS OF BIO-GAS ENGINES
AIR COOLED SERIES
TABLE-3

Description	CA1 G	CA2 G	TA1 G	TA2 G
Bore (mm)	80	80	87.5	87.5
Stroke (mm)	110	110	110	110
Piston displacement (cm^3)	553	1106	661.53	1323.06
Number and arrangement of cylinders	1 vertical	2 vertical	1 vertical	2 vertical
Working cycle	4 storke dual fual (Diesel + Bio-gas)			
Compression ratio	16.5:1	16.5:1	17.5:1	17.5:1
Direction of rotation (Facing flywheel)	clockwise/Anticlockwise			
Maximum speed (RPM)	2000	2000	2000	2000
Minimum idle speed (RPM)	750	750	750	750
Minimum operating speed (RPM)	1200	1200	1200	1200
Cooling system	Axial fan air cooled			
Lubricating system	Forced feed gear pump			
Overall dimensions				
Length (mm)	516	684	516	684
Width (mm)	524	527	524	527
Total height (mm)	743	825	743	825
(I) Height 'A' (mm)	539.8	621.8	539.8	621.8
(II) Height 'B' (mm)	203.2	203.2	203.2	203.2

Note : I) Height 'A' is distance of top from crankshaft centre line
II) Height 'B' is distance of bottom from crankshaft centre line

Cont...

69

Description	CA1 G	CA2 G	TA1 G	TA2 G
Total weight (without flywheel) kgs.	118	217	118	217
Continuous rating as per B. S. : 649 B. H. P. (At 2000 PRM)	6	12	7.5	15

Maximum torque	1400		1500	
(In kg/m)	2.42	4.84	2.90	5.8
(In lb / ft)	17.5	35	21	42
Brake mean effective Pressure :				
(In kg/cm²)	5.5	5.5	5.5	5.5
(In lb / in²)	78.2	78.2	78.2	78.2

Intermittent rating as per B. S : 649 B. H. P. (At 2000 RPM)	6.6	13.20	8.25	16.5

Maximum torque	1400		1500	
(In kg/m)	2.68	5.36	3.1512	6.30
(In lb / ft)	19.25	38.5	23.1	46.2
Brake mean effective Pressure :				
(In kg/cm²)	6.04	6.04	6.0	6.0
(In lb / in²)	85.9	85.9	85.34	85.34

Specific fuel consumption at fuel load when fully on diesel (gms/bhp-hr)	212.91	212.91	215.175	215.175
Specific fuel consumption at full load of diesel when on dual fuel (gms/bhp-hr)	31.9365	31.9365	32.27625	32.27625
Bio-gas requirement for dual fuel (m³/bhp-hr)	0.424755 (15 Cubic feet/bhp-hr)			

SPECIFICATIONS OF BIO - GAS ENGINES

TABLE 2

DESCRIPTION	RDA 3	RDA 4	RDA 6	RB 33	RB 44	RB 66
BORE (mm)	103	103	103	110	110	110
STROKE (mm)	116	116	116	116	116	116
MAX. SPEED (RPM)	2000	2000	2000	2200	2200	2200
MIN IDLE SPEED (RPM)	550	550	550	550	550	550
MIN. OPERATING SPEED (RPM)	1000	1000	1000	1000	1000	1000
COOLING SYSTEM	AXIAL FAN AIR COOLED			WATER COOLED		
B.H.P. (AT 2000 RPM)	36·0	47·0	70·5	48·6	64·0	96·0
S.F.C. AT FULL LOAD WHEN FULLY ON DIESEL (g/bhp-h)	173	168	170	171	171	171
S.F.C. AT FULL LOAD OF DIESEL WHEN ON DUAL FUEL (g/bhp-h)	30	30	30	30	30	30
BIO GAS REQUIREMENT FOR DUAL FUEL (m^3/bhp-h)	0·425 (15 CUBIC feet/bhp-h)					

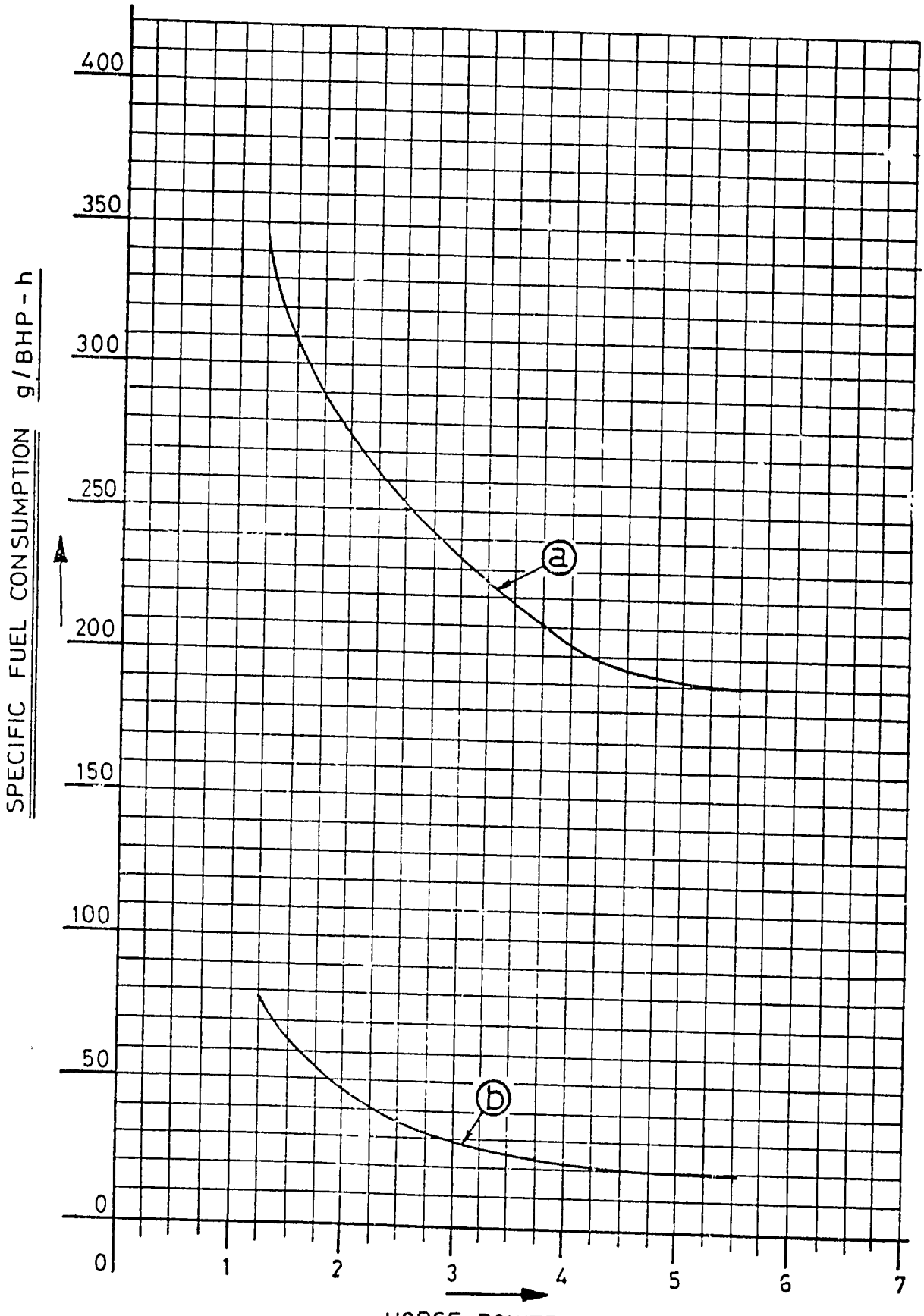

FIG. -2

KIRLOSKAR OIL ENGINES LIMITED
MARKETING DIVISION

EXHAUST SMOKE DENSITY

BOSCH UNITS

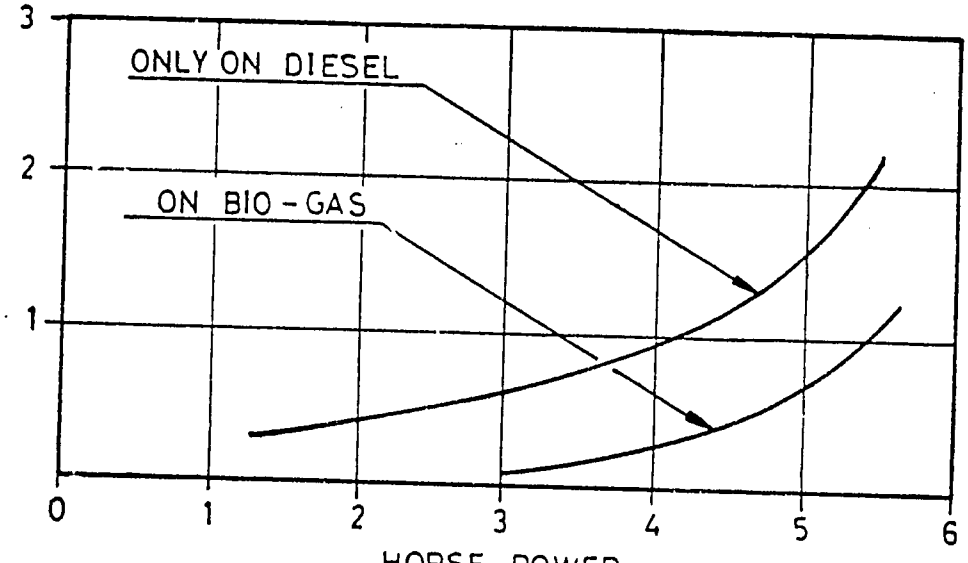

CONTINUOUS AS PER B.S.-649.

FIG.-3

Kirloskar

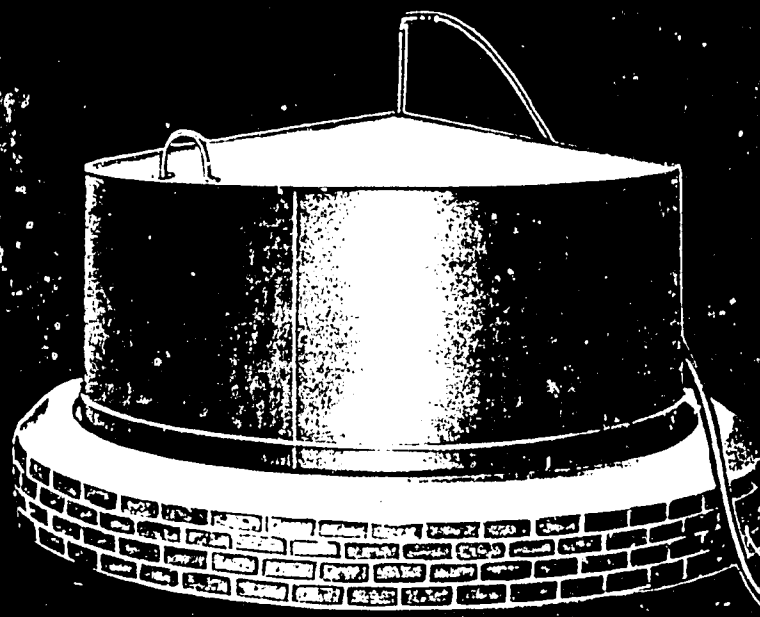

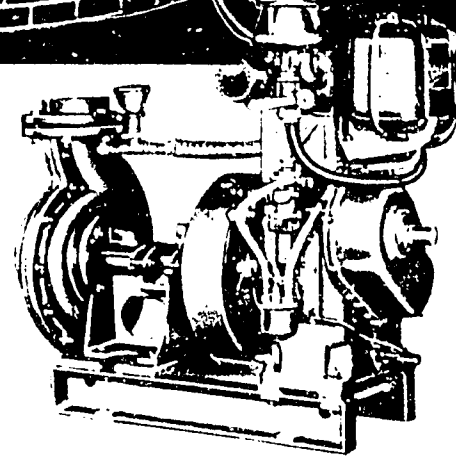

Biogas

now harnessed... for mechanical power

Brings you these exclusive benefits :

- ★ Consumes a mixture of 80% biogas and 20% diesel.
- ★ The design enables the engine to automatically switch over to diesel...without interruption, in case the gas supply cuts off.
- ★ Diesel consumption : 1 litre for a 5-hour run, when full supply of biogas is available.
- ★ Lube oil consumption : drastic reduction. You now require only 50% quantity as oil-changing period is doubled.
- ★ Life of engine increases considerably.
- ★ Suitable for biogas plant of any capacity. Requires 15 c.f.t. gas per BHP per hour, i.e. only 75 c.f.t. gas required for running a 5 BHP Kirloskar biogas engine for one hour.
- ★ Very economical to irrigate, to power a crusher and a thresher.
- ★ Where electricity is not available, this engine is used for generating set application.

Liberal subsidy and technical guidance available from the Khadi & Village Industries Commission for the installation of biogas plants.

Commercial bank loan available for the purchases of Kirloskar biogas engines, as well as for the installation of the plant.

Patents applied for.

Saves around Rs 2000 annually on operational costs.

Distributors :

Kirloskar...largest selling diesel engines in India

Manufactured by

KIRLOSKAR OIL ENGINES LTD

Khadki, Pune-411 003

APPENDIX 3

T-015

001629

technical bulletin

USE OF GASEOUS FUEL WITH ONAN ELECTRIC GENERATING SETS

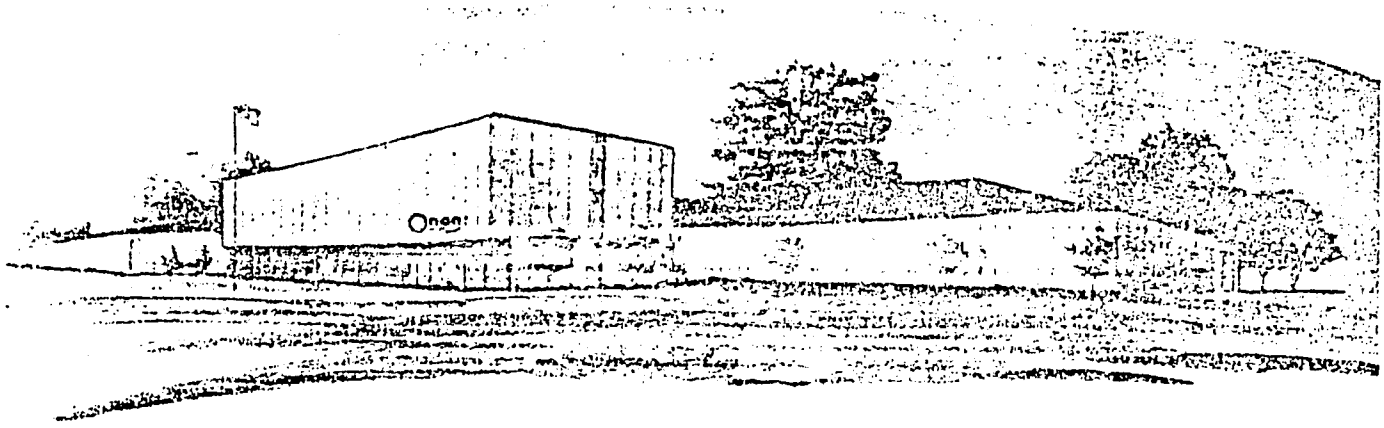

ONAN 1400 73RD AVENUE N.E. • MINNEAPOLIS, MINNESOTA 55432
A DIVISION OF ONAN CORPORATION

Printed in U.S.A.

AUGUST 1972

TABLE OF CONTENTS

SCOPE 2
EXCERPTS FROM NFPA PAMPHLET 58 2
GAS AS A FUEL 2
TYPES OF GASEOUS FUELS 2
POWER COMPARISON TABLE 3
TEMPERATURE AND PRESSURE 4
WORKING PRESSURE 5
SYSTEM COMPONENTS 5
VAPOR WITHDRAWAL 7
FUEL LINE SIZE 10
TYPICAL FUEL SYSTEM INSTALLATIONS 12

SCOPE

Information in this bulletin applies to natural gas, manufactured (city) gas and LP (liquified petroleum) gas. This bulletin is not intended to be an installation manual, but rather a design guide.

The various types of installation problems cannot all be covered because of the variety of requirements. Illustrations of installations are only typical and do not represent actual installations. They do represent recommendations of the manufacturer.

Consult a reputable local gas distributor and NFPA (National Fire Protection Association) Pamphlet 58 for more specific information.

EXCERPTS FROM NFPA PAMPHLET 58

It is recommended that the installer or architect read Pamphlet 58.

1. All piping and tubing shall be suitable for a working pressure of not less than 125 psi (pounds per square inch).
2. Aluminum tubing shall not be used in exterior locations or where it is in contact with masonry, plastered walls or insulation.
3. No gas in liquid phase shall be piped into any building for fuel purposes except buildings or separate fire divisions of buildings used exclusively for housing internal combustion engines and for research and experimental laboratories.
4. The use of threaded cast iron pipe fittings is prohibited.
5. Approved flexible hose may be used on the low pressure side of the system.
6. All piping, tubing and hose shall be tested after assembly and proved free from leaks at not less than normal operating pressures. Tests shall not be made with a flame.
7. Piping outside buildings may be buried, above ground, or both, but shall be well supported and protected against physical damage. Where soil conditions warrant, all piping shall be protected against corrosion. Where condensation may occur, the piping shall be pitched back to the container, or suitable means shall be provided for revaporization of the condensate.
8. Provisions shall be made for expansion, contraction, jarring, vibration and settling. This may be accomplished by flexible connections.

NOTE: *NFPA requires that all standby generating sets be installed in a fireproof room or separate building (see excerpt "3"). Fuel line sizes are determined by individual unit requirements and must include approved shutoff devices. All hardware, such as lines and fittings, must meet local codes.*

GAS AS A FUEL

Gas is a desirable fuel for internal combustion engines even though there may be a slight loss in power. Although gaseous fuels generally have higher octane ratings than gasoline, some manufactured "city" gases have a poor octane rating. The combustion efficiency of an engine may be increased without producing more heat by increasing the compression ratio. Compression ratio of an engine is limited by the type of fuel used. Generally, natural gas and propane allow using higher compression ratios.

Gaseous fuels have a low residue content and generally build up minimum carbon deposits. Gaseous fuels mix more thoroughly with air to produce a mixture which burns more completely than gasoline mixtures.

Advantages of Gaseous Fuel Operation:

1. Minimum carbon formation.
2. Less sludge in oil.
3. Less valve burning.
4. No wash down of cylinder wall lubrication during engine starting.
5. No tetra-ethyl lead to foul spark plugs and other engine parts.
6. Excellent antiknock qualities.
7. Small amount of contaminating residues.
8. A nearly homogeneous mixture in cylinder.

TYPES OF GASEOUS FUELS

The selection of a particular gas for fuel depends on several important factors: (1) availability, (2) efficiency required, (3) engine application (mobile or not), (4) initial cost and (5) cost of operation.

The amount of heat any fuel is capable of producing depends on the basic structure of the fuel. Dry gases vary in regard to heat content as do gasoline, diesel fuel or other fuels. Propane and butane have considerably higher heat values than do methane and ethane.

The amount of heat a given fuel is capable of producing is usually expressed in BTU*. Manufactured gas, composed primarily of methane (marsh gas), has a heat content of about 500 BTU/cu ft. An engine fueled with this gas would produce about 40% less power than the same engine fueled with gasoline. The heat content of butane, a minor component of LP gas, is about 3260

* British Thermal Unit

BTU/cu ft. No derating would be necessary with this fuel. See Table 1.

If propane is used, it is recommended that type HD-5 be used.

POWER COMPARISON TABLE -

A unit using butane, propane or a commercial mixture of both will deliver nearly the same power as when using gasoline.

1. Using 1100 BTU gas, a unit will deliver 80 to 95 percent of its gasoline rated power.
2. Using 850 BTU gas, a unit will deliver 80 to 85 percent of its gasoline rated power.
3. Using 600 BTU gas, a unit will deliver 70 to 75 percent of its gasoline rated power.
4. Using 450 BTU gas, a unit will deliver 50 to 60 percent of its gasoline rated power.

Natural gas is composed primarily of methane and varying amounts of other dry gases with a heat content of of about 1000 BTU/cu. ft. It is piped from the source to points of consumption. In localities situated far from the source, natural gas is comparatively expensive as a fuel. Localities not serviced by natural gas frequently have a manufactured gas system.

Manufactured gas is not greatly adaptable as a fuel for generating sets when efficiency is important because the heat value is so low the engine must be derated as

TABLE 1. MAXIMUM KW (POTENTIAL ENGINE CAPABILITY *)

		SPARK IGNITION			
MODEL **	NOTE (see below)	GASOLINE	PROPANE	NATURAL GAS	550 BTU
2.5LK		2.6	2.5	2.1	
2.5AJ		2.5	2.4	2.3	
4.0CCK		5.5	5.4	5.0	
5.0CCK		5.5	5.4	5.0	
6.5NH		7.0	6.5	6.0	
7.5JB		8.0	7.8	7.5	
10.0CCKB		10.2	9.5	8.0	
12.5JC		17.0	16.0	13.5	
12.5RJC		17.0	16.5	16.0	
15.0JC		17.0	16.0	13.5	
		–	–	15.0 ★	
15.0RJC		17.0	16.5	16.0	CONSULT FACTORY
30.0EK		33.0	31.0	28.0	
45.0EM		48.0	45.0	39.0	
55.0KB	3.0	65.0	58.0	52.0	
70.0KR	4.0	–	–	77.0	
85.0KR	4.0	93.0	85.0	77.0	
		–	–	84.0 ±	
115.0WA	5.0	120.0	110.0	113.0	
140.0WE	6.0	152.0	140.0	120.0	
		–	–	140.0 ±	
150.0WE	6.0	152.0	140.0	120.0	
		–	–	140.0 ±	
170.0WB	10.0	185.0	180.0	174.0	
		–	–	180.0 ±	
250.0FT	10.0	–	–	260.0	
350.0WF	20.0	–	–	390.0	
400.0WK	20.0	–	–	480.0	

* Maximum engine capability after reasonable break-in period.

** 60-hertz ratings shown. For 50-hertz units, use 83 percent of 60-hertz ratings.

★ This value obtained with high compression engine (do not use propane).

± This value obtained with high compression engine.

NOTE-This value can be added for deducting fan HP on city water-cooled models.

79

TABLE 2. PRESSURE EQUIVALENTS

1 inch water column	equals	.58 ounces/sq. in.
11 inch water column	equals	6.38 ounces/sq. in.
11 inch water column	equals	.4 lb./sq. in.
1 lb./sq. in.	equals	27.71 inch water column
1 lb./sq. in.	equals	16 ounces
1 lb./sq. in.	equals	2.04 inch mercury
1 inch mercury	equals	.49 lb./sq. in.
1 standard atmosphere	equals	14.73 lb./sq. in.
1 ounce/sq.in.	equals	1.73 inch water column
1 inch mercury	equals	13.59 inch water

much as 50 percent. Also, the gas manufacturing cost is usually higher than for other types of fuels. On the other hand, there are no storage problems such as with LP gas. Ambient temperature also has no effect on supplies.

LP gas refers to liquefied petroleum gas, a commercial mixture of propane and butane. The ratio between them varies with local temperatures and user requirements. While propane vaporizes at a lower temperature than butane, butane has a higher heat content. Stored and transported under pressure in tanks, LP gas at normal temperatures is a vapor. By increasing pressure and lowering the temperature, it remains in a liquefied state until withdrawn from its storage tanks.

TEMPERATURE AND PRESSURE

Temperature and pressure are interdependent. If gas temperature is changed, the pressure will change proportionally. A gas at room temperature can be changed to a liquid by compression and stored in a closed container. This is how LP gas is liquefied and stored.

TABLE 3. AVERAGE FUEL CONSUMPTION AT FULL LOAD IN CU. FT./HR.

MODELS	RPM	NATURAL GAS	LPG *
1.0AJ	1,800	33	13
2.5AJ	3,600	62	25
2.5LK	1,800	54	23
4.0CCK	1,800	90	40
5.0CCK	1,800	115	47
6.5NH	1,800	150	60
7.5JB	1,800	126	63
10.0CCKB	3,600	200	100
12.5JC	1,800	230	92
12.5RJC	1,800	230	92
15.0JC	1,800	255	110
15.0RJC	1,800	255	110
30.0EK	1,800	600	245
45.0EM	1,800	690	290
55.0KB	1,800	840	330
70.0KR	1,800	1,000	–
85.0KR	1,800	1,400	400
115.0WA	1,800	1,800	730
140.0WE	1,800	1,450	730
150.0WE	1,800	1,450	730
170.0WB	1,800	2,500	1,000
250.0FT	1,800	3,000	–
350.0WF	1,800	3,850	–
400.0WK	1,800	4,200	–

* LPG: 1 gallon = 36.5 cu. ft., 1 lb. = 8.5 cu. ft.

A liquid at atmospheric pressure can be changed to a gas by raising the temperature to the liquid's boiling point such as boiling water. Vaporizing LP gas builds pressure within the container.

WORKING PRESSURE

The fuel system components must operate at various working pressures depending on the kind of gas, size and length of fuel lines, number of units to be supplied by a given source, ambient temperature, etc. Components must have the strength to function properly under anticipated or calculated maximum working pressures. LP gas tanks, for example, must be able to withstand a working pressure of 250 psi as specified in Pamphlet 58, National Fire Protection Association. Regulators must conform to the applicable specifications of the same agency in addition to performing the functions for which they are designed. The final regulator in a system must be able to maintain a constant pressure within a prescribed range which may be from 3 ounces to 5 pounds at the inlet.

NOTE: *Some codes prohibit the use of high pressure accumulator tanks within the building or high pressure fuel supply piping to natural gas units of 350 KW and larger. For these installations, the gas supply must enter the building under low pressure and be "boosted" by the generating set. Onan has factory-mounted booster pumps available for these generating sets.*

There are several ways of measuring and expressing pressure. Pressure measured with a manometer is expressed in inches of water or mercury. Pressure measured with a gauge is expressed in ounces or pounds per square inch (psi). Because both systems are used and to convert calculations into like units of measure, refer to the pressure equivalents in Table 2.

SYSTEM COMPONENTS

Components depend on individual requirements. Usually the following components are standard.

Regulators: Gaseous fuel is metered to the carburetor on a demand basis. A regulator (demand or secondary type) is supplied with fuel at an inlet pressure only slightly above atmospheric pressure. If supply pressures are high (above 6 ounces), an additional primary regulator is used to reduce the supply pressure to a suitable level. Two primary regulators used in series are referred to as a "two-stage" regulation system.

The demand regulator in most systems regulates the gas flow by responding to pressure changes in the intake system of the engine. When the engine is shut down and there is no demand for fuel, the regulator prevents gas flow. A solenoid valve should be installed in the line as a positive shutoff device.

Regulators are not always separate units. They may be integrated with a converter or carburetor but their function remains the same.

NOTE: *Onan recommends venting regulators in buildings to the outside. Gas leakage could occur if the regulator has diaphragm failure. Heavy industrial line regulators with a relief valve definitely need a vent.*

CAUTION *A separate regulator must never be used between the tank and converter in a liquid withdrawal system.*

Regulators are designed to do a particular job in a particular system. A regulator designed for use in a vapor gas system cannot be used in a liquid gas system without modification. Regulators should be mounted

TABLE 4. REGULATOR SELECTION

MODELS	IF SOURCE PRESSURE IS:				
	6 to 11 OZ.	11 OZ. to 1 LB.	1 to 2 LBS.	2 to 4 LBS.	4 LBS. or OVER
AK, AJ, LK	1	1	1	1	1
CCK, JB, CCKB, NH	6	6	6	6	6
JC, RJC	2	2	2	2	2
*EK	None	3	3	3	3
*EM	None	4	3	3	3
*KB	None	4	3	3	3
*KR	None	4	4	3	3
*WA, WE	**	4	4	4	4
*WB	**	7	4	4	4
*FT	None	7	4	4	4

* Thermac regulator standard on EK, EM, KB, KR, WA, WB, WE and FT gas fuel IMPCO system. Maximum supply pressure to Thermac is 12 ounces. Thermac outlet pressure is 3 ounces for 1000 BTU gas.

** Combination natural gas-gasoline systems can use regulator in next column. For natural gas, no regulator is needed up to 11 ounces.

Note: Code numbers refer to KEY column in Table 6 for regulator part number and identification.

TABLE 5. INLET PRESSURE TO SECONDARY REGULATOR
(Straight Gaseous Fuel Only)

MODEL	PRESSURE	MODEL	PRESSURE	MODEL	PRESSURE	MODEL	PRESSURE
AJ, AK, NH CCK, CCKB JB, JC RJC (Begin Spec P)	2 oz. to 6 oz.	JC RJC (Spec A through N)	6 oz. to 5 psi	EK EM	12 oz. maximum (to thermac)	KB, KR WA, WB WE	12 oz. maximum (to thermac)
						WF, WK *	20 psi

* Usually only require one regulator (see text).

where they will receive least vibration. They should not be in areas of extreme heat.

On most late model systems using IMPCO gaseous fuel carburetors, the recommended pressure to the carburetor is 3 ounces. A THERMAC regulator is installed at the carburetor to regulate this pressure. The THERMAC regulator is suitable for pressures up to 12 ounces. For regulator selection of higher supply pressures, see Table 4.

NOTE: *Models WF and WK shouldn't require an additional regulator for natural gas. The WF and WK require a 20 psi natural gas supply and therefore do not use a THERMAC valve.*

Converter (Vaporizer): These components, used only in LP gas liquid withdrawal systems, provide heat for vaporizing liquefied fuel. All LP gas converters should be vented to outside of building.

Heat is usually supplied by the engine coolant, thermostatically controlled at about 170°F, maintaining a rather constant fuel temperature. This positive method of vaporizing liquefied fuel allows a constant fuel-air mixture despite changes in withdrawal rates and atmospheric temperature.

IMPORTANT: *Where ambient temperatures fall below freezing, generating sets of 50 KW and higher capacity should employ a vaporizer which has a gas-fueled burner to supply heat for vaporization. An adequate supply of vaporized fuel will then be assured for starting and permitting the set to immediately carry the load.*

A burner-type vaporizer must be installed outdoors and as close as permissible to the point of consumption. It may be used with either surface or subsurface tanks. The rate of vaporization is automatically controlled to meet vapor demands. Generated gas, storage gas or both may be supplied on demand. An anti-overflow valve prevents liquid fuel from reaching the service line.

TABLE 6. PRIMARY GASEOUS FUEL REGULATORS

PART NUMBER	FUNCTION	ORIFICE	INLET SIZE	OUTLET SIZE	INLET PRESSURE	OUTLET PRESSURE	MAXIMUM CAPACITY	KEY
148P33	Pressure Reducing	9/64"	1/4"	1/2"	250 lbs	11" wc	190 cfh	1
148P34	Pressure Reducing	1/4"	3/4"	3/4"	200 lbs	11" wc	680 cfh	2
148P343	Pressure Reducing	1/2"	1-1/4"	1-1/4"	35 lbs	11" wc	1,800 cfh	3
148P363	Pressure Reducing	1"	1-1/2"	1-1/2"	25 lbs	11" wc	7,750 cfh	4
148P427	Pressure Reducing	3/8"	1"	1"	200 lbs	10 lbs	26,600 cfh	5
148P523	Pressure Reducing	1/4"	1/2"	3/4"	200 lbs	11" wc	330 cfh	6
148P605	Pressure Reducing	2"	2"	2"	5 lbs	11" wc	35,600 cfh	7

92

TABLE 7. FUEL STRAINERS

PART NUMBER	PIPE SIZE (in.)	TYPE	TYPE OF FUEL
149P558	3/4	Y	Natural or LP Gas Vapor
149P624	1-1/4	Y	Natural
149P625	1/4	Cone	LP Gas Liquid
149P751	2	Y	Natural
149P752	1	Y	Natural
149P1241	3	Y	Natural

The capacity of a converter is defined in terms of rate of flow and volume of water, horsepower it serves, the volume of gas it is capable of vaporizing, etc. A converter should have a 20 percent reserve capacity for peak load operation.

The flow of water through the converter must be great enough to vaporize enough fuel for peak demands. If water lines are obstructed or too small, so much heat will be taken from the water that it freezes. Moreover, if the fuel mixture becomes too lean, efficiency is lost and engine valves may become susceptible to burning. Not only does this apply to converters but to the size of fuel tanks in vapor withdrawal systems as well. Many converters have the primary and secondary regulator built into them.

Fuel Strainer: Foreign substances can cause failure of sensitive components in gaseous fuel systems. Natural gas contains a gummy substance with a sulfur base which is one of the chief contaminants. Rust, scale, etc., eventually find their way into the fuel system and damage valves and orifices.

Moisture, usually present to some degree, must be eliminated or freezing may occur at the regulators or carburetor during peak loads. Mount the filter slightly lower than the regulator, between the tank and first system component (refer to typical installation illustrations).

Electric Shutoff Valve: Most local codes require the use of an electric fuel shutoff (solenoid) valve which shuts off the gas supply when the engine is stopped. Check applicable agency code requirements for electric lockoff valves for protection against potential fire hazards.

The final regulator in some instances is an acceptable shutoff valve, but a more positive lockoff is usually desired and may be required. See the shutoff valve selection Table 8 for characteristics and usage.

VAPOR WITHDRAWAL

LP gas vapor withdrawn from the tank for consumption carries away a certain amount of heat from the liquid. This heat loss causes the temperature and pressure of the liquid within the tank to fall. Heat is normally absorbed through the tank wall to replace the lost heat. If heat can be replaced, the system will function as intended. If fuel consumption is high and ambient temperatures are low, for example, so much heat is lost that it cannot be replaced from around the tank and the system will not function efficiently.

There are two methods to assist heat transfer (tanks in vapor withdrawal systems absorb heat through only the portion which is in direct contact with the liquefied gas):

1. Use a suitable vaporizer for positive vaporization (liquid withdrawal).
2. Use a tank large enough to meet peak engine demands.

Surface and Subsurface LP Gas Tanks: Select and size the LP gas tanks according to the following requirements:

1. Type of withdrawal system.

TABLE 8. ELECTRIC SHUTOFF VALVE SELECTIONS

MODEL OR UNIT SIZE	LINE PRESSURE	12 VOLT	24 VOLT	MAXIMUM OPERATING PRESS	PIPE SIZE (in.)
15 KW and Smaller	Under 8 Ounces	307P312		8 Ounces	3/4
15 KW and Smaller	To 25 Pounds	307A834	307A863	25 Pounds	3/4
EK, EM	15 Pounds	307A836	307A865	25 Pounds	1
KB, KR	15 Pounds	307A837		25 Pounds	1-1/4
WA, WE	15 Pounds	307A840		15 Pounds	2
WB, FT	15 Pounds		307A841	15 Pounds	2
FT	15 Pounds		307P1048	5 Pounds	3
WF, WK	20 Pounds		307A866	25 Pounds	1-1/4
Liquid Fuel		307P268	307P757		1/4

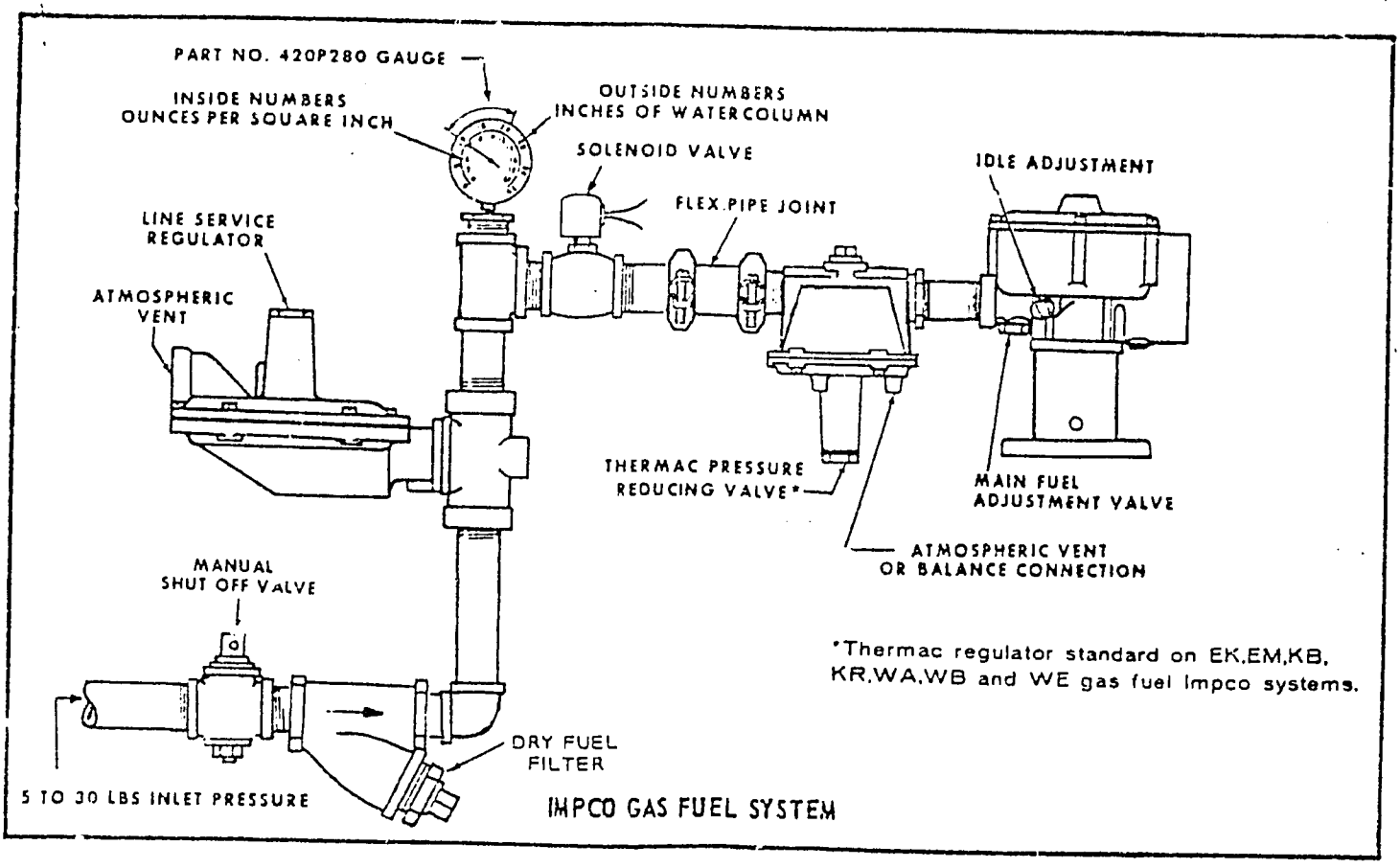

2. Atmospheric (or design) temperature.
3. Vaporization characteristics of fuel.
4. Consumption.

LP gas temperature is critically important and imposes several limitations. Full power cannot be obtained from generating sets fueled by vapor withdrawal systems in which the fuel tanks are too small for the prevailing temperature. In many cases, it may be less expensive to purchase a vaporizer for positive vaporization than to purchase a larger tank to merely provide a greater area for heat transfer.

Burying tanks below frost line where the temperature never goes below 35°F is all right if adequate allowances are made for year to year variation. In northern climates, the frost line might be four feet one year and eight feet the next year, depending on snow cover, etc.

Following are some representative figures for tanks buried at least two feet below the frost line when used in vapor withdrawal systems: a 500-gallon tank half full will vaporize 8-1/2 gallons per hour (300 cu. ft./hr) at 40°F and a 1000-gallon tank half full will vaporize 15 gallons per hour (540 cu. ft./hr) at 40°F.

The following four tables apply only to propane, the major component of LP gas. The vaporization rates are based on the average temperature over an 8-hour period. The column temperatures heading represent the lowest average winter temperature which is the average of the daily winter low temperatures. Use the table which pertains to the type of container used.

Determining Number of 20-Gallon Cylinders Required: Assume that a model 5.0CCK-1R generating set is to be installed using propane gas. The lowest average

TABLE 9. NUMBER OF 20-GALLON PROPANE CYLINDERS REQUIRED AT THE VARIOUS INDICATED TEMPERATURES WHEN KEPT AT LEAST 1/2 FULL

WITHDRAWAL RATE	LOWEST AVERAGE WINTER TEMPERATURE						
	32°F	20°F	10°F	0°F	-10°F	-20°F	-30°F
10 cfh - 25,000 BTU/hr	1	1	1	1	1	1	2
25 cfh - 62,500 BTU/hr	1	1	1	2	2	3	4
50 cfh - 125,000 BTU/hr	2	2	3	3	4	5	9
100 cfh - 250,000 BTU/hr	4	4	5	6	7	10	20

84

TABLE 10. SIZE OF PROPANE TANK (IN GALLONS) REQUIRED AT THE VARIOUS INDICATED TEMPERATURES WHEN KEPT AT LEAST 1/2 FULL

WITHDRAWAL RATE	LOWEST AVERAGE WINTER TEMPERATURE						
	32°F	20°F	10°F	0°F	-10°F	-20°F	-30°F
50 cfh - 125,000 BTU/hr	115	115	115	250	250	400	600
100 cfh - 250,000 BTU/hr	250	250	250	400	500	1000	1500
150 cfh - 375,000 BTU/hr	300	400	500	500	1000	1500	2500
200 cfh - 500,000 BTU/hr	400	500	750	1000	1200	2000	3500
300 cfh - 750,000 BTU/hr	750	1000	1500	2000	2500	4000	5000

outdoor temperature is found to be -10°F. No other gas appliances will be used.

1. Refer to fuel consumption Table 3. Note that a series CCK uses approximately 50 cubic feet of fuel per hour at full-rated load.
2. Refer to cylinders required Table 9. Note that at -10°F, four cylinders will provide 50 cubic feet of vapor fuel per hour. This will be sufficient for unit operation.

Combination Gaseous Fuel and Gasoline Systems: The combination fuel system can use either a gaseous fuel or gasoline to run the generating set. Conversion from one fuel to the other usually consists of shutting o one fuel supply and allowing the other fuel to flow t the carburetor. Most combination carburetors contai fuel shutoff valves and float locking devices for simpl conversion. Idle and power adjustments for either fue are also included in the carburetor for ease of mair tenance. Refer to the generating set's operator manual and technical bulletins for installation techniques.

Gasoline supply lines and tanks are conventionall designed, installed and serviced as on straight gasolin fuel generating sets. The gaseous fuel (natural gas LPG) installation is essentially the same as on straigh

TABLE 11. PROPANE FUEL TWO STAGE REGULATION (2 REGULATORS)
(5 to 15 LB. – ALLOWING PRESSURE DROP OF 1 PSI)
DIAMETER OF FUEL LINE IN INCHES FOR THE VARIOUS LENGTHS OF PIPE

UNIT	KW	CFH	15 FT.	25 FT.	50 FT.	75 FT.	100 FT.	150 FT.	200 FT.	300 FT.
AJ	1,2.5	13,25	1/4 *	1/4 *	1/4 *	1/4 *	1/4 *	1/4 *	1/4 *	1/4 *
LK	2.5	23	1/4 *	1/4 *	1/4 *	1/4 *	1/4 *	1/4 *	1/4 *	1/4 *
CCK	4	40	1/4 *	1/4 *	1/4 *	1/4 *	1/4 *	1/4 *	3/8 £	3/8 £
CCK	5	47	1/4 *	1/4 *	1/4 *	1/4 *	1/4 *	1/4 *	3/8 £	3/8 £
NH	6.5	60	1/4 *	1/4 *	3/8 £	3/8 £	3/8 £	3/8 £	3/8 £	3/8 £
JB	7.5	63	1/4 *	1/4 *	3/8 £	3/8 £	3/8 £	3/8 £	3/8 £	3/8 £
CCKB	10	100	3/8 £	3/8 £	3/8 £	1/2 †	1/2 †	1/2 †	1/2 †	1/2 †
JC, RJC	12.5	92	3/8 £	3/8 £	3/8 £	1/2 †	1/2 †	1/2 †	1/2 †	1/2 †
JC, RJC	15	110	3/8 £	3/8 £	3/8 £	1/2 †	1/2 †	1/2 †	1/2 †	1/2 †
EM	45	290	3/8 £	1/2 †	1/2 †	1/2	1/2	3/4	3/4	3/4
EK	30	245	3/8 £	3/8 £	1/2 †	1/2 †	1/2	1/2	1/2	3/4
KB	55	330	1/2 †	1/2 †	1/2	1/2	3/4	3/4	3/4	3/4
KR	85	400	1/2	1/2	3/4	3/4	1	1	1	1-1/4
WA	115	730	1/2	3/4	3/4	1	1	1	1	1-1/4
WE	140	730	3/4	3/4	1	1	1	1-1/4	1-1/4	1-1/4
WE	150	730	3/4	3/4	3/4	1	1	1	1-1/4	1-1/4
WB	170	1,000	3/4	3/4	1	1	1-1/4	1-1/4	1-1/4	1-1/4

* 3/8 outside diameter tubing may be used.
£ 1/2 outside diameter tubing may be used.
† 5/8 outside diameter tubing may be used.

gas fuel units. The selection of valves, regulators, filter and other components is the same as in the preceding sections of this bulletin with the exception of the inlet pressure differences.

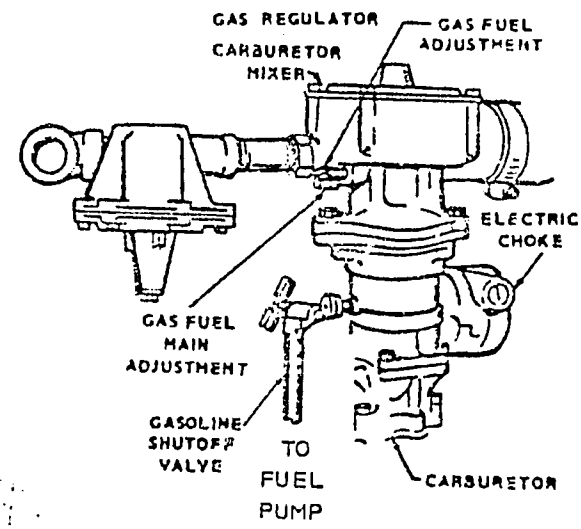

TYPICAL COMBINATION FUEL SYSTEM

FUEL LINE SIZE

Fuel line size depends on the amount of fuel needed to run a unit at full load and the distance the fuel must be moved. Tables 11, 12 and 13 contain this information. A reserve factor is taken into account.

TABLE 12. LPG VAPOR – 11 INCH WATER COLUMN, 0.5 INCH PRESSURE DROP
DIAMETER OF FUEL LINE IN INCHES FOR THE VARIOUS LENGTHS OF PIPE

UNIT	KW	CFH★	15 FT.	25 FT.	50 FT.	75 FT.	100 FT.	150 FT.	200 FT.	300 FT.
AJ	1	13	1/2 *	1/2 *	1/2 *	1/2 £	1/2 £	1/2 †	1/2 †	3/4 †
LK	2.5	25	1/2 ±	1/2 ±	1/2 ±	1/2 £	1/2 £	3/4 £	3/4	3/4
CCK	4	40	1/2 £	1/2 †	3/4 †	3/4 †	3/4	3/4	1	1
CCK	5	47	3/4 £	3/4 †	3/4 †	1	1	1	1	1-1/4
NH	6.5	60	3/4	3/4 †	3/4	1	1	1	1-1/4	1-1/4
CCKB	10	100	3/4	1	1	1	1-1/4	1-1/4	1-1/2	1-1/2
JB	7.5	63	3/4	3/4 †	3/4	1	1	1	1-1/4	1-1/4
JC	12	110	3/4	1	1	1	1-1/4	1-1/4	1-1/2	1-1/2
EM	45	290	1	1-1/4	1-1/4	1-1/4	1-1/2	1-1/2	2	2
EK	30	245	1	1	1	1-1/4	1-1/4	1-1/4	1-1/2	1-1/2
KB	55	330	1	1-1/4	1-1/4	1-1/2	1-1/2	1-1/2	2	2
KR	85	400	1-1/2	1-1/2	1-1/2	2	2	2	2-1/2	2-1/2
WA	115	730	1-1/2	2	2	2	2	2-1/2	2-1/2	2-1/2
WB	170	1000	2	2-1/2	3	3	4	4	4	4
WE	150	730	2	2-1/2	2-1/2	3	3	3	4	4

★ These values are only representative; refer to Table 3 for all specific values.
* 1/2 outside diameter tubing may be used.
£ 5/8 outside diameter tubing may be used.
± These engines require 15 psi natural gas fuel supply.
† 3/4 outside diameter tubing may be used.
Note: Never use smaller than 1/2 outside diameter tubing.

86

TABLE 13. NATURAL GAS – 11 INCH WATER COLUMN, 0.5 INCH PRESSURE DROP
DIAMETER OF FUEL LINE IN INCHES FOR THE VARIOUS LENGTHS OF PIPE

UNIT	KW	CFH★	15 FT.	25 FT.	50 FT.	75 FT.	100 FT.	150 FT.	200 FT.	300 FT
AJ	1	33	1/2	1/2	1/2	3/4	3/4	3/4	1	1-1/4
LK	2	54	1/2	3/4	3/4	3/4	3/4	1	1	1-1/4
CCK	4	90	3/4	3/4	3/4	1	1	1	1-1/4	1-1/4
CCK	5	115	3/4	3/4	3/4	1	1	1-1/4	1-1/4	1-1/4
NH	6.5	150	1	1-1/4	1-1/4	1-1/4	1-1/2	1-1/2	1-1/2	2
CCKB	10	200	1	1-1/4	1-1/4	1-1/4	1-1/2	1-1/2	1-1/2	2
JB	7.5	126	3/4	3/4	3/4	1-1/4	1-1/4	1-1/4	1-1/4	1
JC	15	255	1	1-1/4	1-1/4	1-1/4	1-1/2	1-1/2	1-1/2	2
EK	30	600	1-1/4	1-1/4	1-1/4	1-1/2	1-1/2	2	2	2
EM	45	690	1-1/4	1-1/2	1-1/2	2	2	2	2-1/2	2-1/2
KB	55	840	1-1/2	1-1/2	2	2	2	2-1/2	2-1/2	2-1/2
KR	70	1,000	2	2	2	2	2-1/2	2-1/2	2-1/2	3
KR	85	1,400	2	2	2	2	2-1/2	2-1/2	2-1/2	3
WA	115	1,800	2	2-1/2	2-1/2	3	3	3	3-1/2	3-1/2
WE	150	1,450	2	2-1/2	2-1/2	3	3	3	3-1/2	3-1/2
WB	170	2,500	2-1/2	2-1/2	3	3	3-1/2	3-1/2	3-1/2	4
FT	250	3,000	2-1/2	3	3	3	4	4	4	5
WF †	350	3,850	1-1/4	1-1/4	1-1/4	1-1/4	2	2	2	2
WK †	400	4,200	1-1/4	1-1/4	1-1/4	1-1/4	2	2	2	2
WF ††	350	3,850	2-1/2	3	3	4	4	4	4	6
WK ††	400	4,200	3	4	4	4	4	6	6	6

★ These values are only representative; refer to Table 3 for all specific values.
† These engines require 20 psi natural gas fuel supply.
†† Generating sets with gas boosters on engines . . . . for low pressure incoming fuel line.

TABLE 14.
INLET PRESSURE TO SECONDARY REGULATOR OR THERMAC REGULATOR
(Combination Fuel with Impco System)

UNIT	PRESSURE
EK, EM	12 oz.
WA, WB, WE	12 oz.
KB, KR	12 oz.

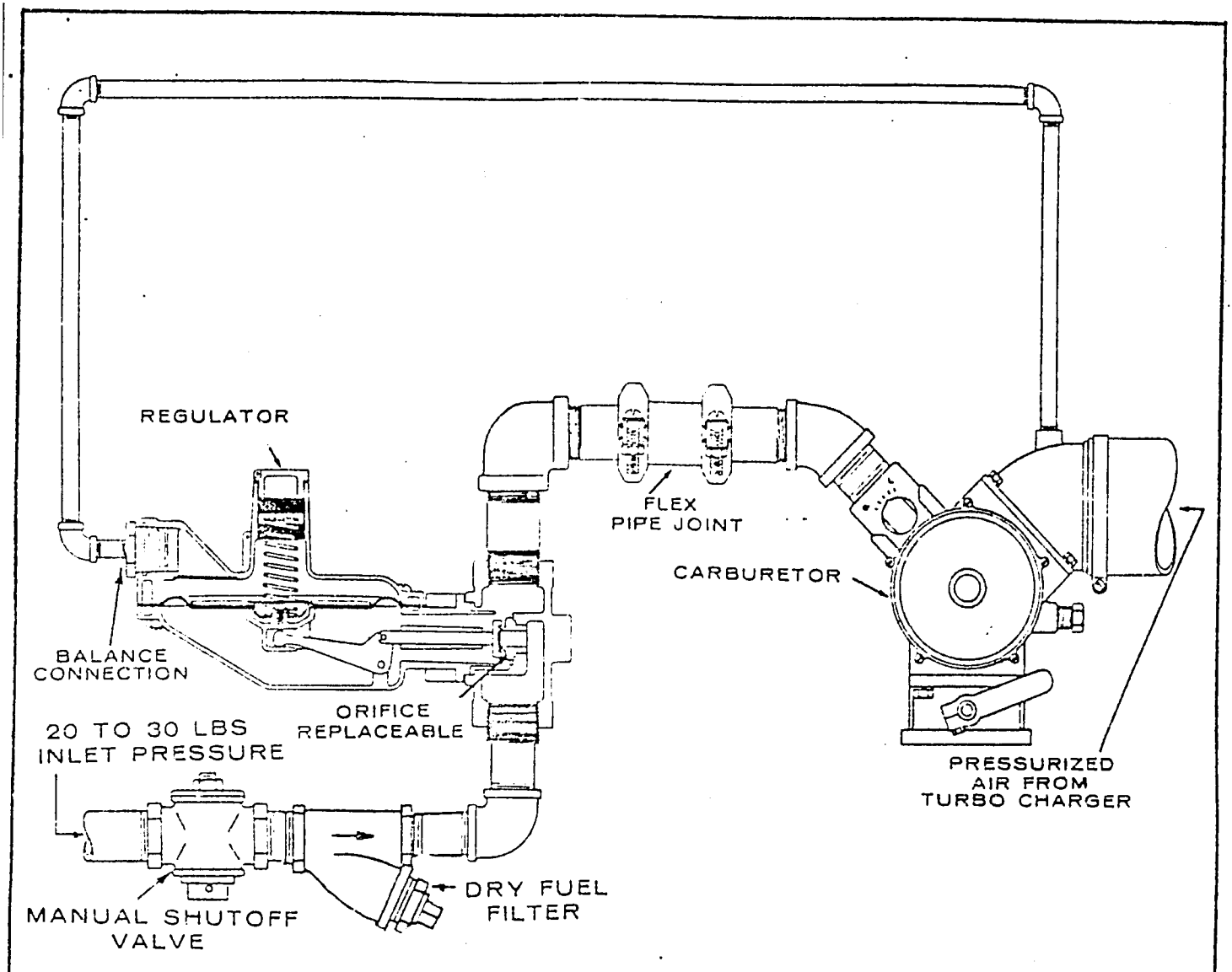

IMPCO NATURAL GAS FUEL SYSTEM FOR WF AND WK

98

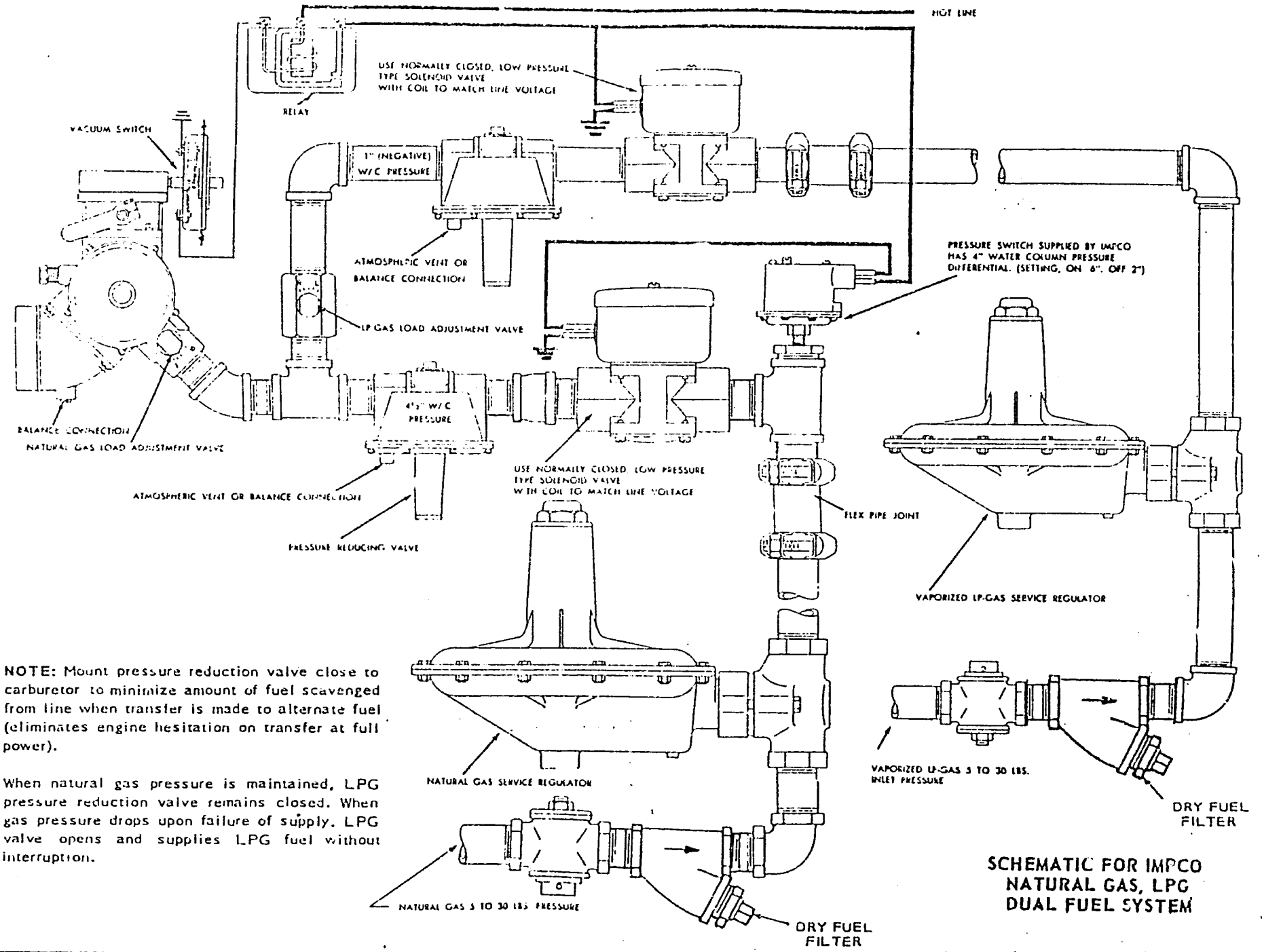

NOTE: Mount pressure reduction valve close to carburetor to minimize amount of fuel scavenged from line when transfer is made to alternate fuel (eliminates engine hesitation on transfer at full power).

When natural gas pressure is maintained, LPG pressure reduction valve remains closed. When gas pressure drops upon failure of supply, LPG valve opens and supplies LPG fuel without interruption.

SCHEMATIC FOR IMPCO NATURAL GAS, LPG DUAL FUEL SYSTEM

TYPICAL GAS-GASOLINE FUEL SYSTEM

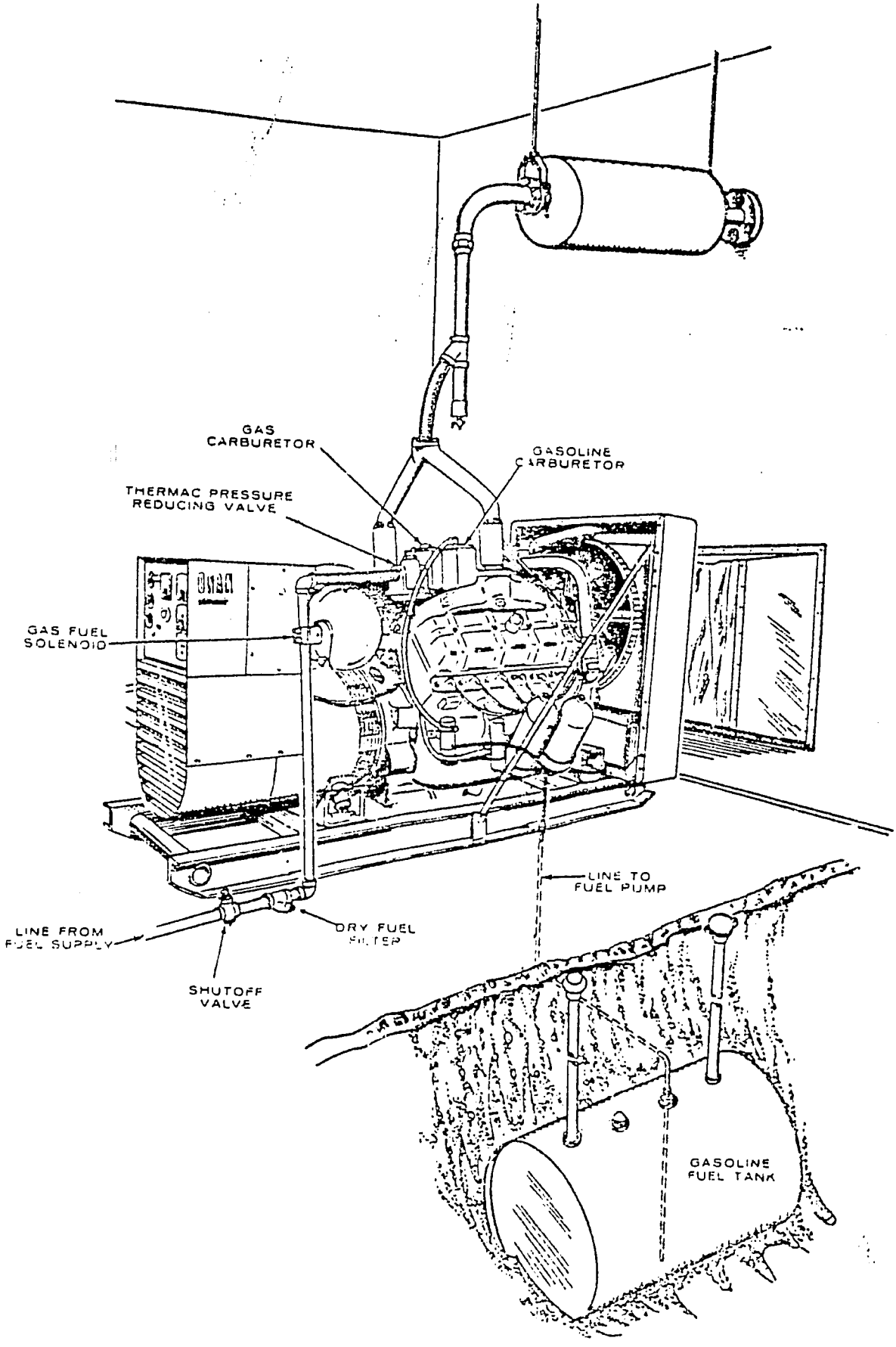

TYPICAL NATURAL OR MANUFACTURED CITY GAS SYSTEM

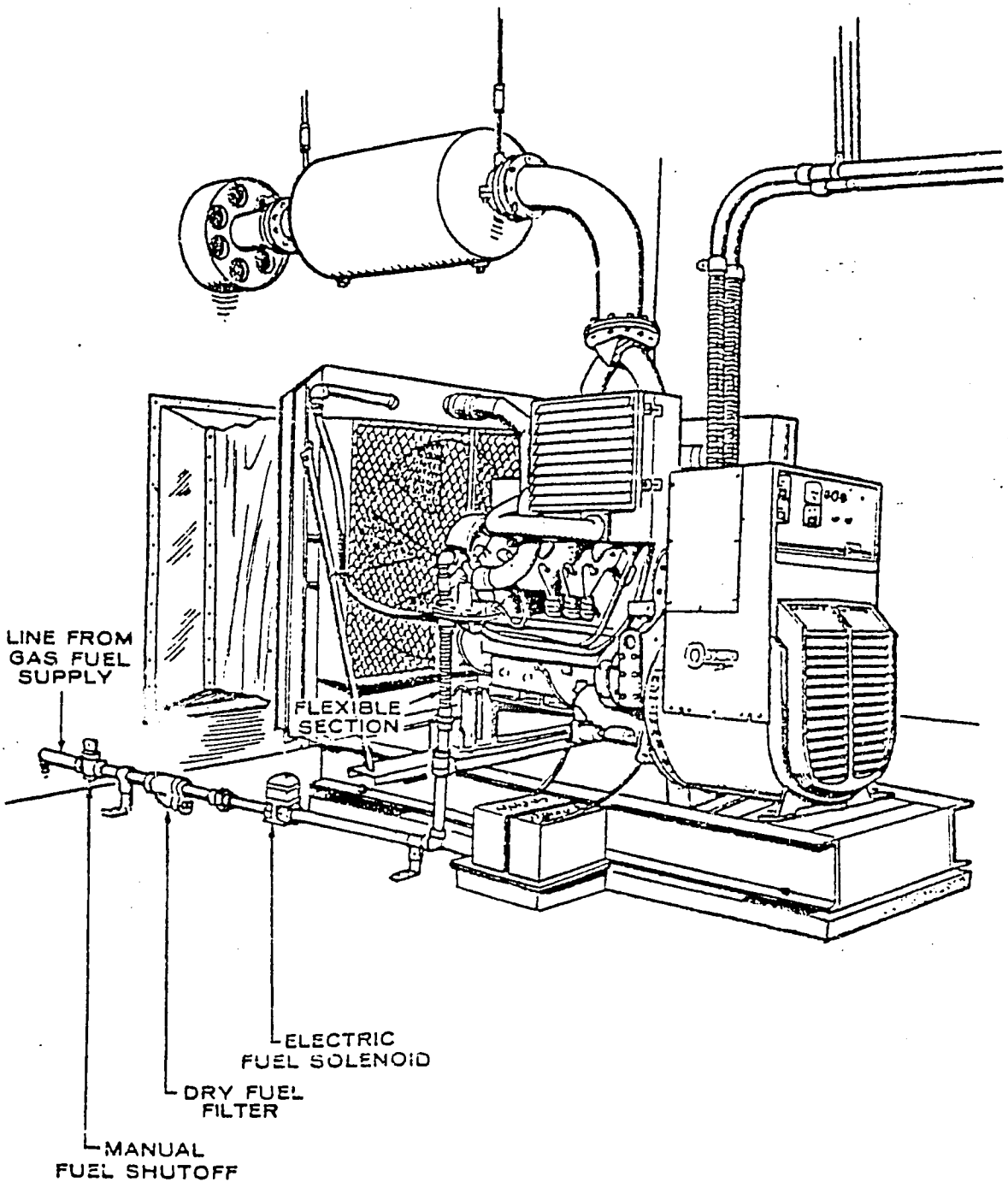

NOTE: WF and WK do not use two-step regulation.

91

TYPICAL LPG VAPOR WITHDRAWAL SYSTEM

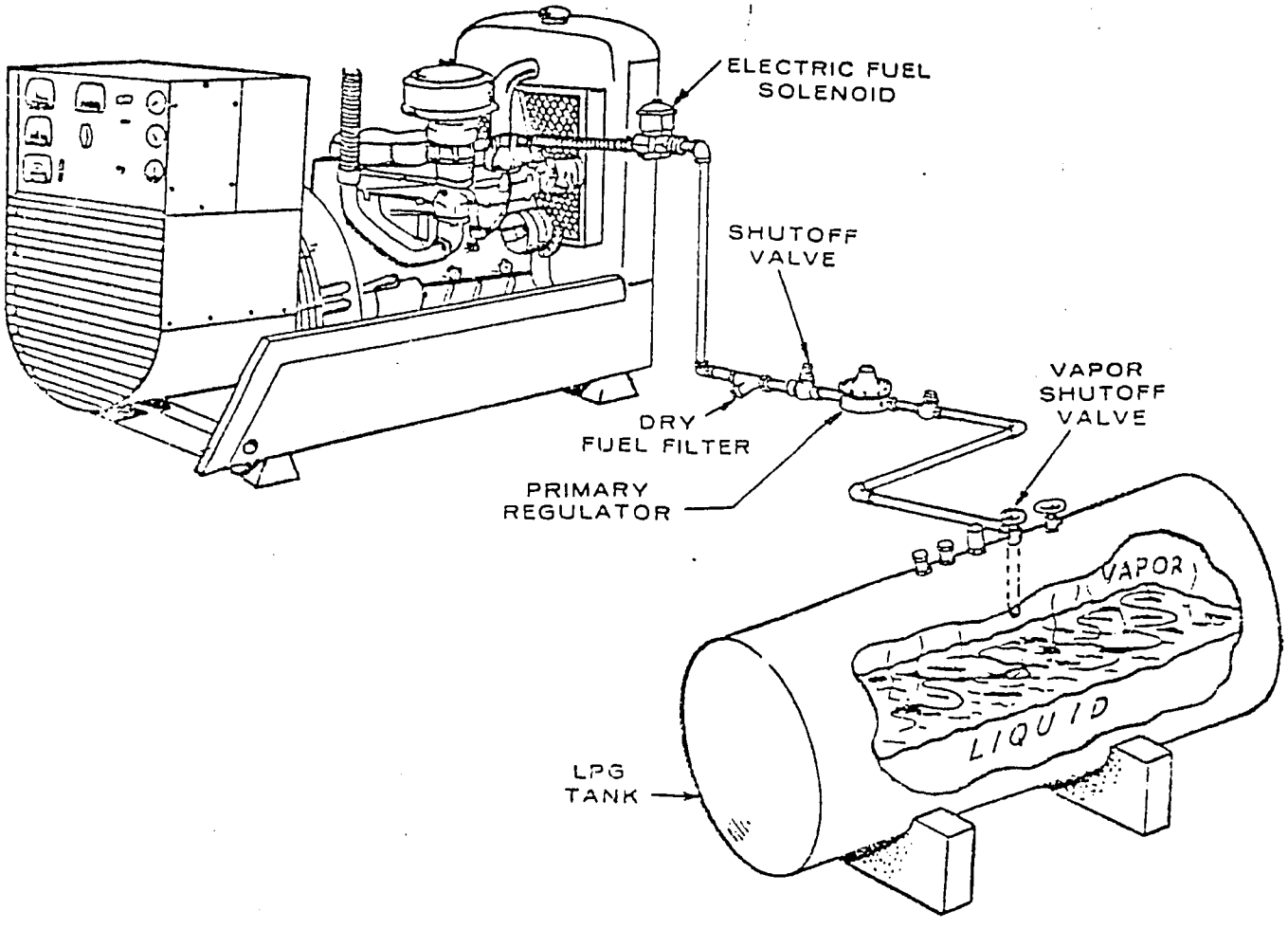

TYPICAL LPG SYSTEM WITH GAS BURNER VAPORIZER

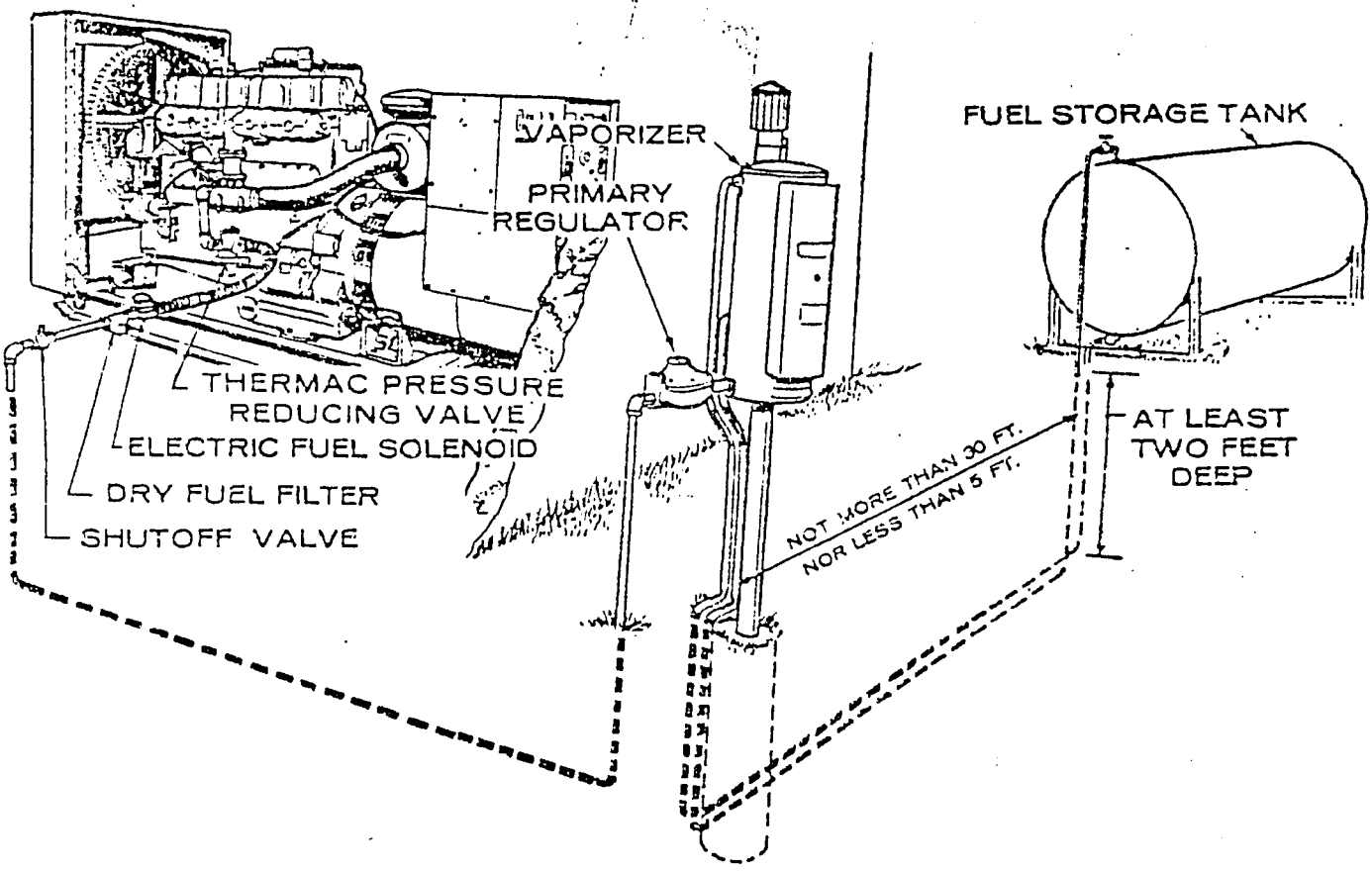

TYPICAL LPG SYSTEM WITH LIQUID WITHDRAWAL

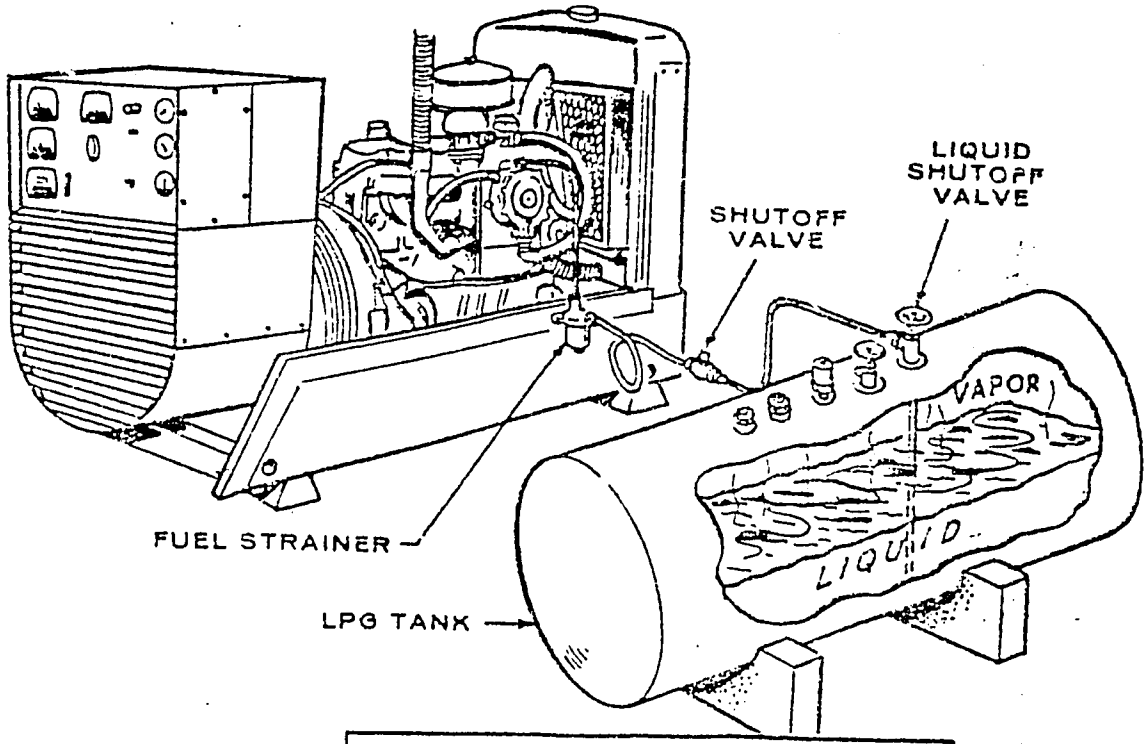

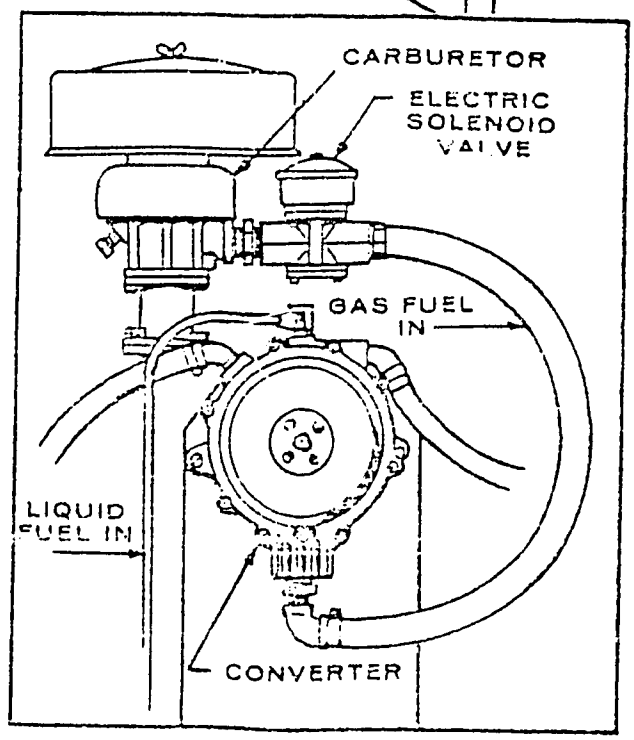

NEVER INSTALL REGULATOR BETWEEN TANK AND CONVERTER IN LIQUID WITHDRAWAL.

94

Onan manufactures a complete line of electric power systems from 1 to 500 KW (generator sets • automatic transfer switches • industrial engines), gas-, gasoline- or diesel-driven. For standby power in homes, industrial plants, commercial buildings and institutions. For auxiliary or portable power in boats, recreational vehicles, service trucks and construction equipment.

APPENDIX 4

Ivory Coast

ALLIS CHALMERS
Compagnie Africaine D'Equipement Industrial
(C.A.E.I.)
30 Rue Thomas Edison
P.O. Box 836
Abidjan
Telex: 768
Cable: Afequip
Phone: 357039

CATERPILLAR OVERSEAS SA
Manutention Africaine
P.O. Box 1299
Abidjan
Telex: 675
Cables: Mea
Phone: 37-33-66
37-33-86/7/8/9/90/91

DETROIT DIESEL ALLISON
Blackwood Hodge (Cote d'Ivoire) S.a.r.l.
25 Boulevard Angoulvant
P.O. Box 14066
Abidjan
Telex: 969-Abidjan 2207
Cable: Suntract
Phone: 324083

KOHLER INTERNATIONAL LIMITED
Ets. Peyrissac Cote D'Ivoire
P.O. Box 1272
Abidjan

LEYLAND INTERNATIONAL
Cie Francaise de l'Afrique Occidentale
Agence Centrale
P.O. Box 2114
Abidjan
Telex: 777
Cables: Senafrica
Phone: 226.51, 262.26

LUCAS SERVICE OVERSEAS LIMITED
Matforce Diesel (Div. of CFCIT)
6 Rue Thomas Edison
Zone 4
P.O. Box 1844
Abidjan
Telex: Tecofra 640435
Phone: 35 58 69

NISSAN DIESEL MOTOR CO. LIMITED
Comafrique
B.P. 20817
Abidjan

PERKINS ENGINES
Carena
P.O. Box 453
Abidjan
Telex: Carena 323
Cables: Carena
Phone: 22.22.27, 32.13.36

PETTERS LIMITED
Hamelle-Afrique SA
Km3 Autoroute Sud
P.O. Box 1326
Abidjan
Telex: Hamelaf 401
Cables: Hamelaf
Phone: 35.67.43, 63.28

Jamaica

ALLIS CHALMERS
Kingston Industrial Agencies Limited
381 Spanish Town Road
P.O. Box 80
Kingston 11
Telex: 01042 – Indage
Cables: Indage
Phone: 933-7121, 933-7123

BRIGGS & STRATTON CORPORATION
Will's Battery Co. Limited
66 Slipe Road
Kingston 5
Cables: Battery
Phone: 936-5921

CATERPILLAR OVERSEAS SA
Jamaica Tractor & Equipment Company
379 Spanish Town Road
P.O. Box 213
Kingston
Telex: 2135 Alprojam
Cables: Jamtrac
Phone: 923-9251

DETROIT DIESEL ALLISON
Industrial Equipment Company
22 Bell Road
P.O. Box 22
Kingston 11
Telex: 381-2213 Haultrax
Cables: Powerload
Phone: (92) 36519, 36529

DORMAN DIESELS LIMITED
Caribbean Industrial Equipment Limited
7 South Avenue
Rest Pen
Kingston 10
Cables: Indquip
Phone: 926-1240

KATOLIGHT
Specialist Agencies Limited
P.O. Box 657
Spanish Town

KLOCKNER-HUMBOLDT-DEUTZ AG
The Technical Supply Co. Limited
44 Hagley Park Road
P.O. Box 75
Kingston 10
Telex: 2271 Servocomp JA
Cables: Kemtex
Phone: 9367744

KOHLER INTERNATIONAL LIMITED
Abdulla C. Marzouca Limited
157 Orange Street
Kingston

LEYLAND INTERNATIONAL
Cars & Commercials Limited
67/79 Harbour Street
Kingston
Cables: Carandom
Phone: 29121, 26821

LUCAS SERVICE OVERSEAS LIMITED
John Crook Limited
Lucas House
86-88 Tower Street
P.O. Box 21
Kingston
Cables: Lucasjam JCA
Phone: 5227/8/9

PERKINS ENGINES LIMITED
Reginald Aitken Limited
437 Spanish Town Road
P.O. Box 280
Kingston 11
Telex: 2170 Marco
Cables: Marco
Phone: 933/6737/9
933/6730, 933-8538, 933-8411

PETTERS LIMITED
Will's Battery Co. Limited
P.O. Box 440
66 Slipe Road
Kingston 5
Cables: Battery
Phone: 936-5921

Japan

ALLIS CHALMERS
Denyo Co. Limited
No.2, 4-Chome
Nakano-Ku
Kamitakada
Tokyo
Telex: 232-2936 Denyo J
Cables: Denweltyo
Phone: 03-552-1201

BRIGGS & STRATTON CORPORATION
Yanase & Co. Limited
Trading Division
Minato-ku
Tokyo
Telex: 78102422551
Cables: Yanaseco
Phone: 452-4311

CATERPILLAR OVERSEAS SA
Caterpillar Mitsubishi Limited
3700 Tana
Sagamihara-Shi
Kanagawa-Ken 229
Telex: J222877
Cables: Caterbishico Sagamihara

DETROIT DIESEL ALLISON
Tomina & Co. Limited
Ibasen Building
No.5 Nichome Kobunacho
Nihombashi
Chuo-Ku
Tokyo 103
Telex: 781-22435 Tomco
Cables: Tomidiesel
Phone: 662-1851

ABSTRACTED APPENDIX 5 002246
XVIII-CE-4, P2

1960 Chevy pickup, two 12-gal. LP tanks on top. Runs on choice of propane or gasoline at the flick of a switch.

Methane and Propane as Auto Fuels

by

Jerry Friedberg

Lots of exciting material has appeared recently on methane, an alternative fuel you can make yourself from organic materials - - manure, garbage, and vegetable matter. We've learned a lot about general theory, specific experiments, and detailed plans for construction of small and large methane-producing plants. None of the literature, however, deals in depth with the potentials, problems, and nuts-and-bolt of making and using your own auto fuel. This article deals specifically with "home-made" methane as an auto fuel, the pros and cons, together with another leading alternative, propane.

When manure, vegetable matter, and water are put into airtight containers called digesters, in the presence of initial starter bacteria, decay takes place releasing gas that can be collected and used for fuel. This gas, bio-gas, can be used for lighting, cooking, powering engines, and other common fuel uses - - and the sludge that remains in the digester after the bio-gas is released is extremely valuable as fertilizer.

Now the good news: the research octane rating of bio-gas is over 110, compared to 82-100 for gasoline, so that bio-gas can be used as auto fuel with even the highest compression auto engines. Pound for pound, bio-gas gives roughly the same mileage as gasoline, and is rather easy on engines and the environment. But where natural gas and gasoline are fossil fuels, taken from oil wells and coal mines, ultimately limited in supply, and involving dependence on vast corporate undertakings, bio-gas can be made by anyone, on scales large and small, from a wide variety of organic "waste" materials.

The idea of producing your own auto fuel from "waste" materials right at hand is very exciting. In practice, however, it's a far larger, more difficult, and more costly project than first appears. Anyone wanting to do it would best know the negative side of the picture as well as the positive. Here are some of the problems, followed by a fresh look at the whole subject.

Amount of Organic Material Needed:

First, for clarity again, methane and bio-gas are not the same thing. Bio-gas commonly is 65% or so methane and 33% carbon-dioxide (CO_2), with small amounts of nitrogen, hydrogen, carbon monoxide, and hydrogen sulphide.. The last item gives bio-gas a rotten egg smell that's unpleasant but an important safety factor in detection of leaks. Since bio-gas is only 65% methane, diluted by some 33% uncombustible CO_2, the energy value of bio-gas runs about 1/3 less (600 BTU/ft^3) than that of methane (1,000 BTU/ft^3). Which means that more bio-gas is required to do a given job, meaning larger jets, nozzles, hoses, and so forth. While it takes about 150 cubic feet of methane to give the fuel equivalent of one gallon of gasoline, it takes about 215 cubic feet of bio-gas.

And that presents the first problem in using bio-gas as auto fuel: the amount of organic matter needed. To make comparisons easier, let's use the phrase "bio-gallon" to mean the bio-gas equivalent (215 ft^3) of one gallon of gasoline. Since the bio-gas yield from a pound of, say, fresh wet cow manure is about 1 ft^3, it takes about 215 lbs of fresh cow manure to produce each bio-gallon of fuel. For a household now consuming an average of, say 3 gallons of gasoline per day, that means hauling 645 lbs. of cow manure each day to the digester. In recent tests on a working 100 ft^3/day digester, it actually took 810 lbs fresh cow manure per day to yield 3 bio-gallons per day.

If you had access to wastes from cows kept indoors, so that all their manure were collectable, it would take some 18 cows to produce that amount of manure each day. Using chicken wastes, a potent and much publicized source of bio-gas, it takes the wastes from some 600 chickens each day to produce a single bio-gallon, or 1800 chickens for 3 bio-gallons/day. One final example: it would take the wastes from 179 adult humans to produce

© Jerry Friedberg, 1976. Reprinted with permission.

one bio-gallon, or 537 humans for 3 bio-gallons/day. In short, operating a continuous-feed digester, adding daily to maintain output, you've got to haul hundreds of pounds of waste matter every day from a large number of animals to get anything like one to three bio-gallons per day.

The alternative is the batch-fed digester, loaded with a large charge, collected from over about 40 days, and then emptied of fertilizer-sludge and reloaded with the next batch. For such a plant, it takes about three to four tons of waste matter to yield a single bio-gallon a day for 40 days, or about 10 tons for 3 bio-gallons per day. Either way, continuous or batch fed, that's a lot or organic material to haul for a modest output.

Storage:

Assuming, though that great amounts of organic material are at hand, we have a second problem: storage. A single bio-gallon is such a large volume of gas (215 cubic feet) that it would take twenty 55-gal. drums to store a single bio-gallon at normal atmospheric pressure. Your vehicle hardly could go around the block on the bio-gas stored in a standard auto fuel tank at normal pressure.

The easiest, lowest cost method of storing bio-gas for auto fuel - - in quantities enough to go any mileage with - is compression. (Other methods are cyrogenic liquification using temperatures below -83°C, polymerization, and chemi-absorption, all more complex and expensive.) At about 2,600 psi (pounds per square inch) pressure, each bio-gallon requires only 1 cubic foot of storage space. (It's stored still as a gas, not liquifying at any pressure unless temperature is reduced below -116°F.)

The tanks usually used in experimenting with methane or bio-gas as auto fuel are 5 feet long and 9 inches in diameter, containing about 300 cubic feet of bio-gas compressed down to 1.9 cubic feet at 2,600 psi - - about 1.4 bio-gallons per tank. So it would take ten such bottles to carry 14 bio-gallons, a little less than the equivalent of a standard gasoline tank. The ten tanks, of course, must be high-pressure tanks, generally rated at least to 3,700 psi. So, in addition to large quantities of waste material for producing the bio-gas, we need a compressor capable of about 2,600 psi, perhaps 10 high pressure cylinders for the auto, and another 10 for storage at the plant - - a substantial investment. And a substantial volume and weight of tanks to carry.

Impurities and Emissions:

For many of us, interest in alternative fuel stems from concern with environmental pollution. Recent tests in a bio-gas powered vehicle by Dr. William Stine at California Polytechnic State University indicated the following emissions (in grams/mile):

	Bio-Gas	Fed. Stds.	1978 Proposed Fed. Stds.
Hydrocarbons	4.18	0.41	0.41
Carbon Monoxide	6.03	3.4	3.4
Nitrogen Oxides	0.63	---	0.4

Typical figures for gasoline-powered vehicles are: hydrocarbons 1.15, carbon monoxide 10.05, and nitrogen oxide 5.13. Bio-gas, then, pollutes far less than gasoline in terms of carbon monoxide and nitrogen oxides, but not in terms of hydrocarbons. With finer tuning, hydrocarbon emissions can be reduced, and it's also true that hydrocarbon emissions from bio-gas are not as smog-producing as those from gasoline, but still bio-gas remains far from meeting federal emissions standards. Certainly bio-gas is not a pollution-free fuel, as some have mistaken it to be.

Other impurities in bio-gas as auto fuel are CO_2, wate vapor, and hydrogen sulphide (H_2S), a corrosive agen that can pit metal cylinder walls and other parts. Williar Stine's research indicates that H_2S levels are not so hig as to threaten corrosion very seriously, but he still recom mends "scrubbing" bio-gas to remove that impurity. I the CO_2 is not scrubbed, it causes problems of freezin and clogging of equipment as the rate of bio-gas fuel us increases. This problem can be overcome either by scrub bing the CO_2 or, as Stine did, by blowing engine hea onto the equipment to keep it from "freezing up. Passing bio-gas through ferric oxide filters, iron filings, c steel wool can remove the H_2S; through calcium chlorid to remove the water vapor; and through lime water to re move the CO_2. Scrubbing out impurities involves addi tional expense and energy. It's not yet clear just hov necessary such scrubbing is, or what digester materials an processes yield what kinds and degrees of impurities

If only in the interests of reducing pollution, scrubbin is recommended. The resulting bio-gas will be more purel methane, improving mileage, reducing storage require ments, etc. On the other hand, scrubbing systems, whil already available, add a lot to the cost and complexity o using bio-gas as auto fuel.

Size and Costs:

Which raises a fourth point: the total size and cost o all that's necessary. To produce a single bio-gallon a da requires a digester about the size of forty-two 55-gal drums - - or 126 55-gal. drums for 3 bio-gallons/day That's a lot of digester to build, heat, agitate, and maintain. One large-scale venture (Ecotope, Snohomish, Wash.) envisions using manure from 350 cows to produce a little less than 40 bio-gallons/day, at a cost of $56,700 for the system - - or about $1,400 for plant alone per bio-gallon/day output. Scrounging used parts and such, this cost can be cut, perhaps down to $1,000 per bio-gallon/day plant capacity. The point is that we're talking about a large and costly digester even if you want only several bio-gallons per day output.

Since the digester must be maintained at about 90°F for optimum performance, some of the bio-gas produced typically is used to provide digester-heat. Depending upon the climate surrounding the plant, the bio-gas used for digester heating will be anything from 0-30% of total bio-gas produced, usually 10-15%, increasing by that amount the organic material to be hauled, size of digester, etc.

The cylinders to be used for bio-gas auto fuel tanks, to be least expensive, probably would be used welding (oxygen) cylinders, sometimes available surplus for about $50 each. Using 10 of them to hold 14 bio-gallons gives a range of 105 miles from home (at 15 mpg) and means an expense of $500 just for fuel tanks (and a lot of added weight). If the vehicle is to be used only locally, you can do with fewer tanks, say 3 tanks for a range of about 30 miles from home - - but even then fuel tank cost will be $150.

Another and probably larger expense will be the compressor. A multi-stage unit, capable of taking flammable gas to 2,600 psi, costs from $2-3,000 new. It's possible to get extremely slow-working, used units for as low as $100. Such compressors take hours and even days to do their work. And to cap it off, the compresser uses energy amounting to about 20% of the value of the bio-gas being compressed.

Range and Performance:

One last item: range and performance. Methane is not available commercially, nor is it likely to be, for use as

motor fuel. (Union Carbine, in New Jersey, will provide methane at $54 to $78 for the equivalent of about 2 gallons gasoline - so high a cost as to be impractical for general use.) In response to a recent request for a list of sewage plants where bio-gas can be gotten for auto use, the Environmental Protection Agency returned a report indicating it would take $22 million to construct such a plant - - a cost considered prohibitive. Bio-gas currently produced at sewage plants typically supplies energy requirements only of the plants themselves. Nor, given all the problems involved, are there any commercial outfits dispensing methane or natural gas as motor fuel. So, if you run on bio-gas, your range from home is limited to what you carry with you.

As for performance, Stine's research indicates a loss, going from gasoline to bio-gas, of 25-30%.

Two Sides of the Picture:

Small wonder, then, that the common complaint among those who have tried setting up small digesters is that the amount produced hardly seems to justify all that goes into the process. While the sludge left in the digester is a valuable fertilizer, or the amount of organic material needed, problems of storage, need to deal with impurities and polluting emissions, limitations of range and performance, and the sheer size of plant, expense, work, and time all add up to a discouraging picture. It's no surprise then that, as of March 1976, there is no one in the United States powering an auto with bio-gas except for brief experimental-educational demonstrations.

So much for the sobering side. There is another side. First, fossil fuels, including petroleum, coal, and natural gas, are running out. Within our lifetimes, gasoline may well become unavailable or severely limited for automotive use.

Second, political developments and inflation continue to drive the price of gasoline upward, and the time may not be far off when for many of us the price will be prohibitive.

Whether home-made bio-gas "pays" as auto fuel involves weighing it against what else is available at what price (energy, time, money) - and bio-gas auto fuel that doesn't pay right now may well pay handsomely in the foreseeable future. So it makes sense to be experimenting, educating ourselves, and demonstrating the potentials of such alternatives.

Another Alternative: Propane:

For many of us, especially those concerned with doing something about auto pollution now, and finding an auto fuel alternative that makes sense immediately, it's helpful to compare bio-gas and liquid petroleum (LP, either propane, butane, or a combination fo the two). LP, like gasoline, is a commercially available petroleum product, at more than 10,000 LP motor fuel filling stations throughout the U.S. and Canada. Storage as a liquid requires only 150-250 psi, which means you can carry 19 gallons of LP in a tank the same size as your 19 gallon gasoline tank. And your range can be whatever you'd like it to be. Travelling crosscountry several times on LP in the past four years, I've found LP filling points through the Yellow Pages just about everywhere I've gone.

Performance and mileage fall off only 10% from gasoline to LP, compared with the 25-30% less on bio-gas. At the same time, cost per gallon goes down an average of about 30-35% from gasoline to LP. So effective cost-per-mile comes out about 20% cheaper on LP than on gasoline. That savings, tank after tank, eventually (took me 1½ years) pays for the initial conversion equipment - - and the savings keep coming thereafter.

Where bio-gas has a fuel value from 540-700 BTU per cubic foot, LP ranges from 2200-3400 BTU per cubic foot, with an octane rating of 110+, same as bio-gas. A typical emissions test reveals the following (grams/mile):

	Gasoline	Propane	1976 Fed. Stds.	1978 Proposed Fed. Stds.
Hydrocarbons	1.15	0.25	0.41	0.41
Carbon Monoxide	10.05	2.07	3.4	3.4
Nitrogen Oxides	5.13	0.58	- - -	0.4

Comparing these figures with Stine's research on bio-gas emissions (above), the contrasts are striking. Even though different autos were used, the conclusion is clear: LP pollutes less than bio-gas does. Claims that LP reduces pollution 70% compared to gasoline seem well justified.

Since LP has been used as motor fuel for over 40 years, long-range studies have been possible. In one of these, the city of Orlando, Florida converted most of their transportation system, including city buses, to LP in 1962. Twelve years later a 1974 report indicated:

- Engine tune-ups every 40,000 miles on LP compared to 4-10,000 on gasoline.
- Complete engine overhauls at 200,000 miles on LP versus 100,000 on gasoline.
- Change of spark plugs every 45,000 on LP compared to 25,000 on gasoline.
- Engine oil and oil filters lasting twice as long on LP.
- virtually no muffler replacement on LP vehicles.

In California's Santa Clara County, the bus system recently was converted to LP with similar results.

Since LP, stored as liquid, enters the engine totally vaporized, cold weather starts are easier, no choking is necessary, and no mixing with and dilution of oil is possible. Oil cannot be washed from cylinder walls (as incomplete burning gasoline does), combustion is virtually complete with no carbon or sludge buildup, ring wear is cut dramatically, and engines stay cleaner and last much longer.

Propane and Methane as a Team We Can Produce:

Perhaps the best news of all is from Joe Ennis, who has been working for several years on a process for home-making propane from home-made bio-gas. Propane, instead of being only a commercial petroleum product, may well come to be, like bio-gas, a fuel any of us can make from organic matter. And since propane stores as liquid at only 150 psi, the propane process could involve far less compression-storage hassle than the bio-gas process. Commercial or user-produced, propane has a lot going for it in comparison with bio-gas. People who want to keep exploring bio-gas as auto fuel may well want to convert to propane as a first, and maybe last, step.

Happily, there's no need for an either-or choice. The fact is that the conversion equipment needed for bio-gas is much the same as that needed for LP or home-made propane! So it makes sense to do it all - - run on commercial LP, keep gasoline as a reserve fuel for those rare times (middle of the night) when LP is unavailable, and develop bio-gas and home-made propane, ALL WITH THE SAME SYSTEM!

Nuts and Bolts:

So, for those ready to move from talking about it to doing it, let's get to the actual nuts and bolts. Enough literature has appeared recently on digester design and operation that we can omit that here, focusing where there is no literature to speak of: from the digester to driving on bio-gas or propane.

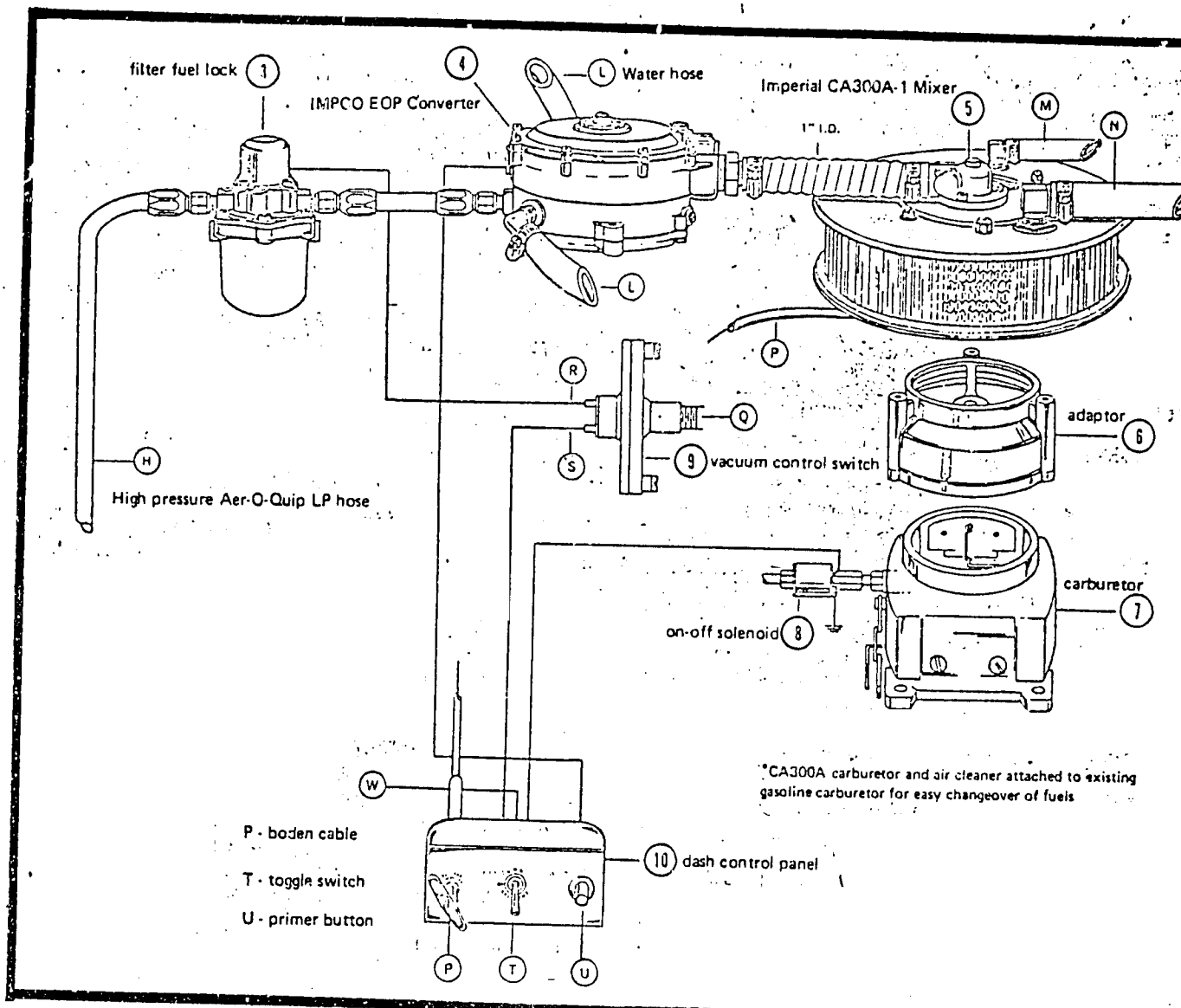

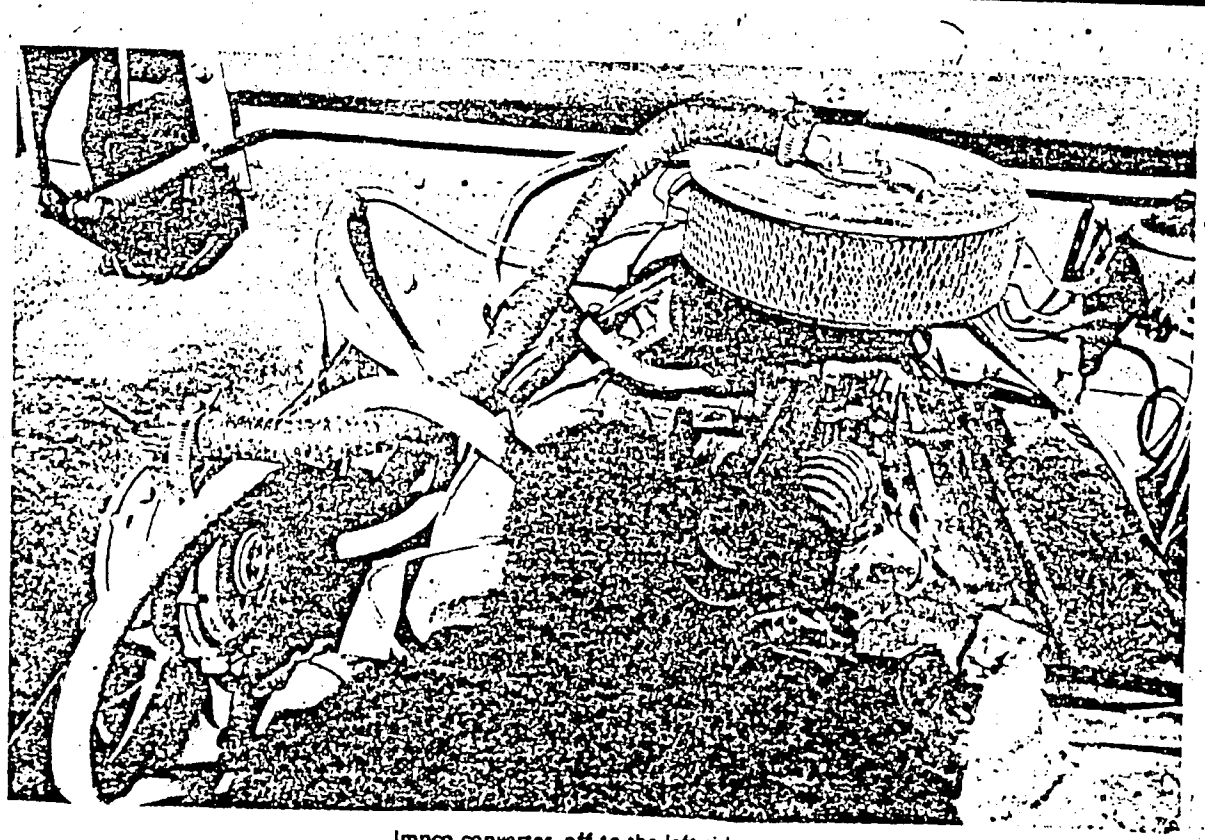

Impco converter, off to the left side.

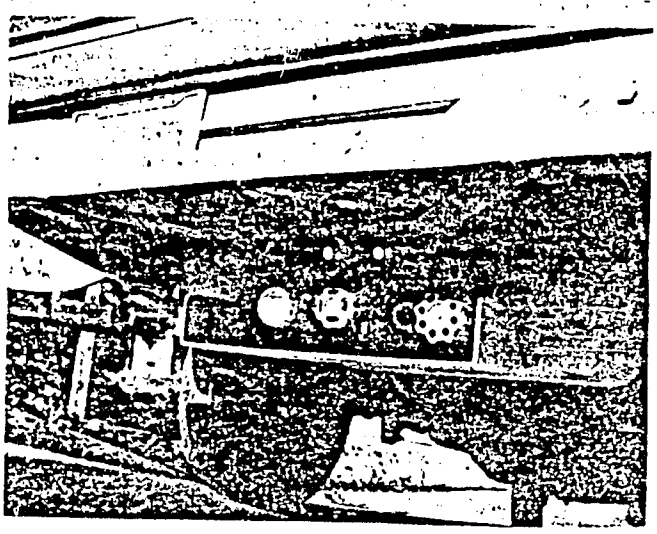

Tank can also be mounted under truck bed.

Compression and storage of bio-gas comes first. Check out scuba-diving compressors, used if possible, and compare with units available from - -

Air-Dry Corporation of America
Northridge, California 91234

* * *

Pneumetric
19338 Londelius Street
Northridge, California 91324

For storage tanks, check out scuba-diving tanks and compare with availability of surplus oxygen tanks used for oxy-acetelyne welding. Any tank that tests to, say, 3,7000 psi will do. Surplus oxygen tanks sometimes can be gotten for about $50 each. Then you'll need a two-stage regulator to step down bio-gas pressure from 2,600 psi storage pressure to around 125 psi. An ordinary oxygen regulator (welding type) will do fine, or a two-stage U.S. Diver regulator (used if possible) at about $25.

The schematic drawing shows all components of a deluxe auto conversion that permits operation on bio-gas, propane (commercially bought or home-made), or gasoline. Hose H is LP high-pressure Aer-O Quip Type. It goes either to a two-stage regulator atop a bio-gas cylinder, a propane meter fuel tank, or (via a "T" fitting) to both. Where both are connected, valves on the tanks permit either fuel to be turned on and the other off.

Item (3) is a filter-fuellock which automatically shuts off the supply of fuel when the ignition key is turned off, also filtering the fuel. Item (4) is an Impco EOP converter, actually a two-stage regulator and heat exchanger, where liquid propane converts to vapor and is released in response to engine demand (vacuum). Hose L is the hose carrying water from the engine's water pump to the car's heater, arranged to run hot water through the EOP, keeping the converter warm so the propane can vaporize without freezing up.

Item (5) is an Imperial CA300A-1 mixer, a carburetor and air cleaner combination that sits directly atop the auto's present carburetor, in place of the present air cleaner. No change in the gasoline carburetor is required. The mixer has air-fuel controls for both idle and speed mixture adjustments, and can be set for proper carburetion with propane, natural gas, or bio-gas. Since bio-gas has only ¼ the fuel value per cubic foot of LP, it's often necessary to restrict air intake to give proper bio-gas/air ratios. Item (6) is an adapter, available in sizes to fit all carburetors, and in straight-up (pictured here) or offset designs. And item (7) is the present carburetor with (8) an on-off solenoid to shut off the gasoline supply when operating on LP or bio-gas.

Actually, a serviceable conversion can be done without items (3), (8), or (10). For four years I've used a simple manual on-off valve in place of (8) to cut costs a little and keep things simple. For quite a while, until I got lazy, I used the fuel tank's on-off valve in place of (3). Item (9) is a vacuum control switch that automatically shuts off

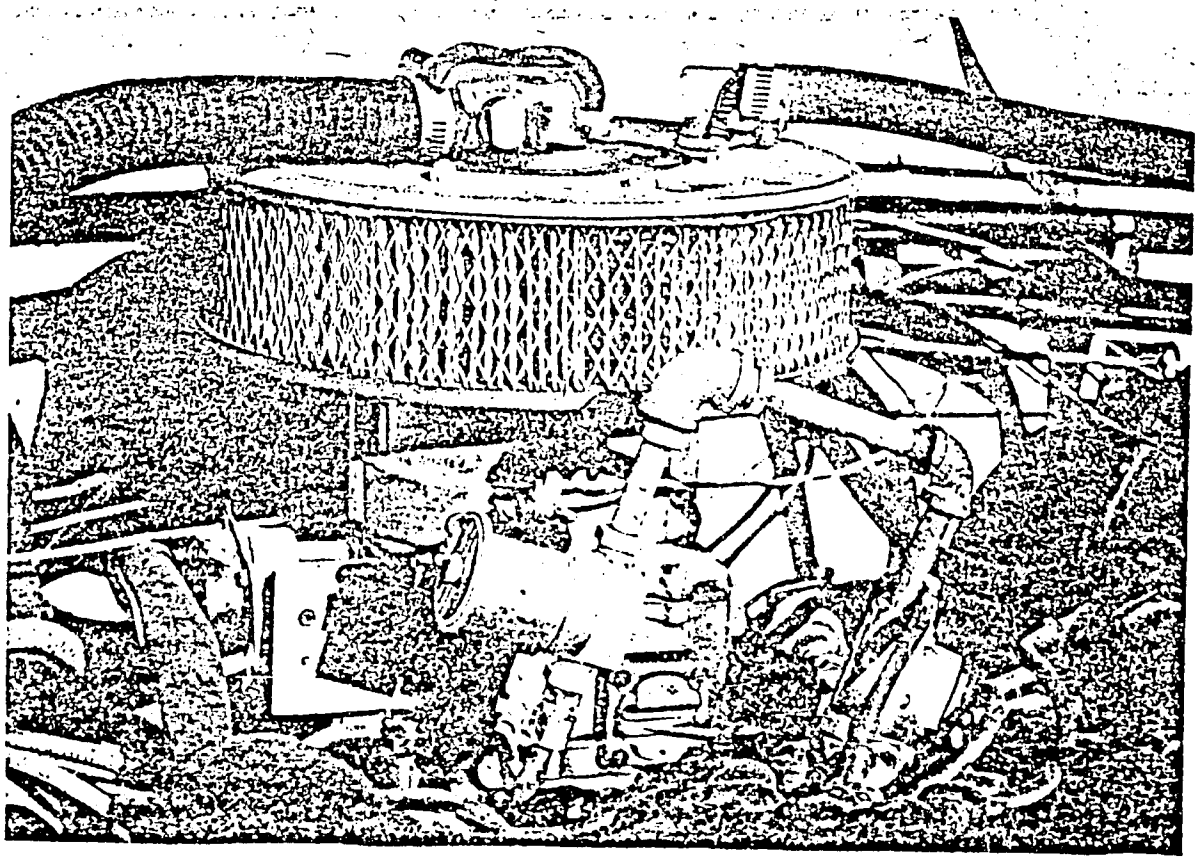

LP mixer atop standard carb. Requires no changes to be made in the engine.

the LP or bio-gas when the engine stops, even if the key is left on - - an additional safety item overlapping somewhat with (3). And finally, item (10) is a dash control panel that allows the driver to switch fuels from the driver's seat, even while the car is in motion. It includes a toggle switch (T) connected to the gasoline solenoid and the LP-bio-gas-solenoid, to turn either one on and the other off; a primer button (U) connected to the converter's electric primer, releasing a shot of gas for cold starts; and a boden cable (P) for opening the mixer's air valve when running on gasoline. None of this is necessary if you're willing to have the inconvenience of getting out of the car (in the rain) and turning a few valves to change fuels.

No that we've run through the schematic, here are some pictures of the real thing, showing all the equipment needed, aside from fuel tanks, for operating on propane, bio-gas, or gasoline. Not all that much. The total conversion can be done by the average mechanically inclined person in just one day.

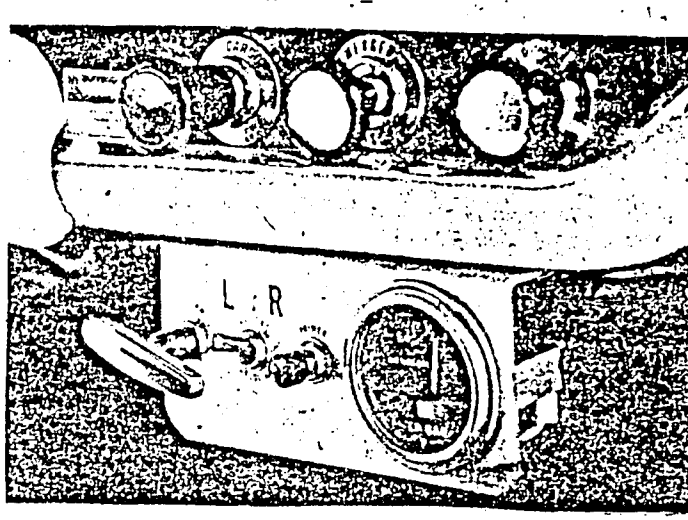

Control panel mounted under dash has LP fuel gauge and switches for switching between gasoline and propane, plus a primer for sure cold-weather starts on LP.

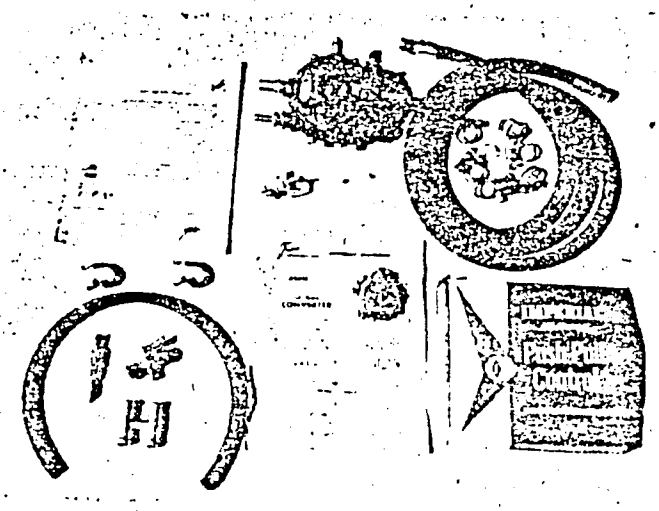

Basic DIY converter kit.

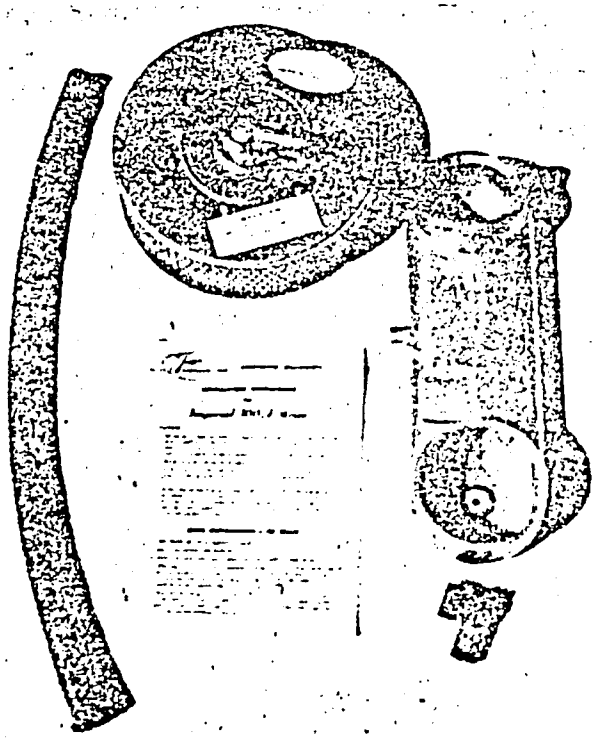

Basic DIY mixer kit.

Costs:

Standard, time-tested, high quality equipment is supplied and guaranteed by manufacturers such as Impco-Imperial, Century, and Beam. Stine, Ennis, Moser, and others who have been experimenting with bio-gas and propane all use Impco equipment, as I do, and it's Impco equipment you see in the schematic and photos. A standard propane conversion, which you can then easily adapt for bio-gas, costs about $600 if done commercially. Doing it yourself, however, and sticking to necessities rather than options, you can cut the cost to $100-200 for everything. That's $70-140 for everything pictured (depending on auto), plus $30-60 for an LP motor fuel tank, for the total of $100-200.

LP tanks are expensive new: $100-250, depending on size (12-30 gals). But you can find them used at forklift places, LP plants, and junkyards for much less than that. My 12-gal. tanks were $35 each, for example. Remember that you must get the motor vehicle tanks, not just any LP tank, for only the motor vehicle tanks have the safety features required by law and common sense both.

To make it a three-way conversion, including bio-gas, add the cost of high-pressure fuel tanks, regulator, compressor, and digester - - a total of no less than $500, and probably much more.

Conversion equipment, then, requires a chunk of money to be laid out - - $100-200 to operate on LP or gasoline, and quite a bit more for bio-gas or home-made propane - - but, with LP at least, fuel and maintainance savings soon pay back the initial investment, with continuing savings thereafter. And then there are the additional benefits of longer engine life and much reduced pollution.

Sources:

For additional literature, prices, etc., these are the three largest manufacturers of conversion equipment:

Impco Carburetion, Inc.
16916 Gridley Place
Cerritos, California 90701

* * *

Beam Products Mfg. Company
3050 Roslyn Street
Los Angeles, California 90063

Marvel-Schebler/Tillston Div. (Century)
Berg-Warner Corporation
2195 South Elwin Road
Decatur, Illinois 62525

The prices quoted above are available only from the nation's sole discount source of conversion equipment:

Arrakis Propane Conversions
Route 2, Box 96C
Leslie, Arkansas 72645

All others are 50% higher than Arrakis, and Arrakis is the only one that provides the equipment on a do-it-yourself kit basis, with detailed manual included.

The two main manufacturers of LP motor fuel tanks are:

Brunner Engineering & Mfg., Inc.
P.O. Box 559
Bedford, Indiana 47421

• • •

Manchester Tank & Equipment Co.
2880 Norton Avenue
Lynwood, California 90262

And another address that may be helpful is:

National Fire Protection Association
270 Atlantic Avenue
Boston, Massachusetts 02210

For $4 you can get their "Pamphlet No. 58, Storage and Handling of LP Gases," the bible of safety standards in the most minute detail.

While looking at names and addresses, here are some people presently experimenting in depth with methane-bio-gas-LP systems:

Don Moser
c/o Om Cooking
211 South Washington Street
Stillwater, Oklahoma 72072

Don's schoolbus runs on methane, LP, or gasoline with an Impco system like that in the schematic. Don helps others set up digesters, hoping eventually to drive cross country entirely on home-made bio-gas.

Joe Ennis
Popular Branch, N.C. 27965

Joe's VW runs on either LP or gasoline, with an Impco system from Arrakis. Joe's working on systems of home-making propane as well as methane.

Ken Kimble
Kaiser-Brencar
10831 Airport Drive
El Cajon, California 92020

Ken displayed a truck powered by liquid natural gas (LNG) at a San Diego energy fair in 1974. LNG was stored in a cyrogenic tank at temperatures below -83°C.

Jerry Friedberg
Route 2, Box 96C
Leslie, Arkansas 72645

My Chevy pickup runs on LP or gasoline, using Arrakis equipment. I'll be revising this article periodically, and will appreciate reader feedback, especially from those actually doing it.

In writing to these people, enclose a stamped, self-addressed envelope, and, to Don and Joe who operate out of personal funds on a shoestring, enclose $1 if you can to help them keep up their fine work.

And Some Perspective:

As fossil fuels run out and petroleum products soar in price, it's exciting to know we can develop home-made bio-gas and propane, made from organic waste materials, for auto fuel. But bio-gas and propane are not the final answer either. The total bio-gas that could be produced from all available organic wastes in the U.S. would amount to only about 2% of total U.S. energy consumption. And homemade propane is similarly limited.

There are two ways to brighten that dim picture. One is to expand the supply of organic material collectable. "Energy farming," growing crops specifically for conversion to bio-gas and propane, is a form of solar energy conversion which could increase user-produced fuel potential to perhaps 15% of current U.S. energy use.

The second, and ultimately more important, way is to alter demand - - which is to say alter lifestyles over half the globe so that we live far more simply and demand less energy. Difficult as it is to imagine our culture making that change, our only choice is to do what we can toward that end, beginning with ourselves, now. And working on bio-gas and propane as homemade auto fuels is one small part of the effort to develop a more blanced relationship with our planet.

Some Sources:

Alternative Sources of Energy, Book One, 1974.

Alternative Sources of Energy Magazine, n.11, July 1973.

Burgell, Jim, "Experiences With Methane." *Alternative Sources of Energy*, n.20, March 1976.

Butane Propane News Magazine, November 1972.

Ecotope Group, "Process Feasibility Study," Box 618, Snohomish, Wash. 98290.

Energy Book No. 1, Running Press, 38 S. 19th St., Philadelphia, Pa. 19103, 1975.

Energy Primer, Portola Institute, 558 Santa Cruz Avenue, Menlo Park, California 94025, 1974.

Ennis, Joe, "Compost-Methane-Propane-Motor Fuel." n.d., o. Jan. 1972.

Ennis, Joe, "How to Convert A VW Bus to Methane," *Green Revolution Magazine*, v. 33, n. 3, March 1976.

Ennis, Joe, "Methane as Fuel," letter to J.P. Hurley, April 2, 1974.

Fleet Owner Magazine, August 1972.

Fry, L. John, *Practical Building of Methane Power Plants*, Dept. DA, 1223 North Nopal Street, Santa Barbara, California 93103.

"Methane Digester Design," *Alternatives Magazine*, Autumn 1973, v. 3, n.1.

Moore, Fred, "Information on Propane and Methane," Information Network, 1921 Menalto Avenue, Menlo Park, Cal. 94025, v. 2, n. 1, September 1973.

Moser, Don, "Uncle Ben's Conversion," c/o Om Cooking, 211 South Washington Street, Stillwater, Oklahoma 74074.

New Alchemy Institute, "Methane Digesters for Fuel Gas and Fertilizer," Newsletter No. 3, Spring 1973.

Rutan, Al, *The Do's and Don't's of Methane*, Rutan Research, Box 69, Annandale, Minn. 55302, 1976.

"Special Eco-Fuel Section," *Alternative Sources of Energy*, n. 11, July 1973.

Steadman, Philip, *Energy, Environment, and Building*, 1975.

Stine, William B., "Combustion Characteristics of Sewer Gas and Its Performance as an Automotive Fuel," 1975, available from Dr. Melvyn C. Branch, Reprints Chairman, WSS/CI, Mechanical Engineering Dept., Univ. of California, Berkeley, California 94720. Ask for paper 75-7 (1975).

U.S. Dept. of the Interior, "Emission Characteristics of Propane as Automotive Fuel," Bureau of Mines Report of Investigation RI 7672, 1972.

Worsham, John H., "Wheels of Progress," Motor Transport Superintendent, 400 South Orange Avenue, Orlando, Florida, 1974

Jerry Friedberg
Route 2, Box 96C
Leslie, AK 72645

APPENDIX 6 XIV-CA-1, P3

Processing cattle waste for recycling as animal feed

by Gerald M. Ward and Thomas Muscato

Increasing feed costs and international concern for the conservation of resources have focused attention on the nutrients in animal wastes that have in the past been used largely as fertilizer or as a major source of fuel for villagers in a number of countries. Research and field trials in recent years have demonstrated a variety of other uses for manure, including direct feeding of dried manure, a number of systems for separating or processing manure fractions, conversion to biogas (methane), use as feedstock for synthesis gas, pyrrolysis to produce fuel, and some industrial uses. A comparative study of these alternatives is beyond the scope of this article. These systems have been discussed by Yeck *et al.* (1975) and an analysis of their economic potential has been presented by Harper and Seckler (1975). The feeding value of cattle wastes will be discussed here in relation to alternative methods of handling and processing waste as animal feed.

Dehydrated poultry excreta has a definite place in the feeding of ruminants as described by Smith (1974). The case for dehydrated cattle manure is not as clear-cut because the energy and protein density is considerably lower than in poultry waste due to higher fibre and ash contents.

Gerald M. Ward *is Professor and* Thomas Muscato *is Research Associate at the Department of Animal Sciences, Colorado State University, Fort Collins, Colorado 80523, United States.*

Composition of manure

Variations in the chemical composition of cattle manure have been summarized by Azevedo and Stout (1974) and Graber (1973). Table 1 sets out the average analyses of 139 samples collected biweekly over a one-year period from a feedlot in northeastern Colorado, as well as the analyses of samples collected at three locations in the pens: from a concrete apron and from the middle and rear of the pen. Ash averaged 37.1 percent on a dry matter basis, varying from 30.7 to 42.9 percent by location. It was consistently higher when collected from the centre and rear of the pens. Inclusion of soil during scraping presumably caused the increased values. Total nitrogen of all samples averaged 3.67 percent (or 23 percent crude protein on an ash-free basis) and protein nitrogen represented 65 percent of total nitrogen.

Crude fibre content of rations varied from 6.5 to 27 percent and was reflected in the crude fibre content of the manure. P, K, Ca and Na, which are usually present in feeds, were less variable than organic constituents, with mean values of 0.54, 1.35, 1.88 and 0.51 respectively. Heavy metal analysis of Pb and Cd for 25 random samples averaged 1.36 and 1.68 ppm respectively.

The data in Table 2 indicate the influence of cattle diets on the composition of fresh faecal matter. High forage diets result in faeces with a higher percentage of ash and fibre and a proportionately lower percentage of protein. The principal potential nutrients to be derived from cattle manure are fibre and protein. The faeces of grain-fed cattle contain grain fragments, although feeding trials generally indicate nearly complete digestion of starch by cattle and a 75 to 85 percent digestibility of ration dry matter. A complex set of factors influence the extent to which the fibre of feed will be digested by ruminants, including the physical state of feed (i.e. ground, pelleted), the level of intake, and the amount of readily fermented carbohydrate in the ration. The ash fraction of faecal material contains major and minor elements of nutritional value and is probably in a form available for absorption. However, a large fraction of the ash component consists of non-nutritive elements such as silica and aluminium.

Whereas the other components of faeces represent residues remaining after digestion, microbial protein is the result of bacterial growth in the rumen and large intestine (Mason, 1969), and commonly represents a higher quality protein than that found in cattle feeds. The digestibility of the microbial protein in faeces has not been studied specifically, but considerable variation has been found in the digestibility of the crude protein of cattle manure.

Preparation for feeding and use as cattle feed

The simplest approach to refeeding cattle wastes is to remove the air-

WAR, no. 20, 1976

104

Table 1. **Averages of manure constituents**

Location in pen	Dry matter	Total nitrogen (Kjeldahl)	True protein nitrogen (TCA)	NH_4—N	Neutral detergent fibre	Acid detergent fibre	Cellulose	Lignin	Ash
	Percent dry matter								
Concrete apron	53.21	2.61	1.62	0.37	41.42	33.67	6.55	5.25	30.66
Centre	63.51	2.28	1.46	0.29	47.15	38.34	10.06	5.26	37.96
Rear	60.49	2.07	1.34	0.27	49.46	43.08	12.59	5.41	42.90
Average all samples	58.96	2.32	1.47	0.31	45.92	37.98	9.63	5.31	37.14
Average all samples (ash-free basis)	58.96	3.67	2.35	0.47	55.22	45.68	—	8.58	—

SOURCE: Ward, 1976 [unpublished data].

dried waste from feedlots, grind it and mix it in rations. Dried manure added to feedlot cattle rations at levels of 20 to 60 percent has been studied by Ferrell and Garrett (1973), Westing and Brandenburg (1974) and Albin and Sherrod (1975). It was concluded that the manure is nutritionally valuable and that acceptance is not a problem. However, recycling through feedlot cattle removes only about 30 percent of the dry matter of manure. An approach to solving the problem of manure removal is to feed it to cows on winter range. Hull *et al.* (1973) fed 75 percent dried manure pelleted with 25 percent barley to pregnant cows on range. Initially the cows refused the pellets, but a two- to three-week adjustment period resulted in pellet consumption of 5.5 to 8.2 kg per head per day.

Several digestion trials with dried cattle manure from feedlots have been reported (Albin and Sherrod, 1975; Johnson, 1972; Taylor *et al.*, 1974; McClure *et al.*, 1971; and Tinnimit *et al.*, 1972). The results indicate considerable variations in nutrient digestibility. Manure from cattle fed high concentrate rations generally showed a dry matter digestibility of 40 to 50 percent, while that from high forage rations had digestibilities as low as 16 percent (Taylor *et al.*, 1974), although in this case digestibility may have been reduced by the heating temperature of 120°C. Protein digestibility likewise showed a wide range from 15 to 70 percent.

A comparison of dried and composted manure indicated that composting improved the digestibility of cell wall constituents, but had less effect on other components (Albin and Sherrod, 1975). Dairy cattle wastes have a higher content of fibre than wastes from feedlot cattle because of the difference in feeding practices. They could be expected to show a lower digestibility in line with the above results. Tinnimit *et al.* (1972) obtained 29 percent digestibility of dry matter and Smith *et al.* (1969) found equally low values for dairy manure from cattle fed an all-forage diet.

Wastelage. Anthony (1970) initiated the idea of "wastelage," a mixture of 57 percent fresh manure and 43 percent hay or hay plus grain. The product is ensiled and undergoes a typical lactic acid fermentation. A series of trials summarized by Anthony (1974) indicated weight gains on wastelage superior to those on grass hay for a period of 389 days for ewes and 332 days for beef heifers. Yearling cattle fed wastelage were slaughtered, and a comparison of meat quality indicated no difference from animals fed conventional rations.

When wastelage containing 60 percent fresh manure and 40 percent

Table 2. **Chemical composition of cattle faeces**

Ration		Lactating Holstein cows		Hereford steers	
		High hay [1]	High grain [2]	Maize silage [3]	High grain [4]
Faeces	kg/day [5]	22.2	8.3	8.67	7.83
Faeces	kg/day [6]	3.9	1.9	1.89	2.09
Crude protein	% [7]	12.9	18.7	13.0	16.7
Ether extract	% [7]	2.8	2.8	0.9	5.2
Crude fibre	% [7]	41.3	26.1	20.4	12.6
Nitrogen-free extract	% [7]	24.8	44.9	44.3	56.3
Ash	% [7]	29.7	7.4	21.2	9.1

[1] Dairy cows fed cracked maize and alfalfa hay ration 17.83, average weight 500 kg. — [2] Same cows fed maize-hay ration 75:25 — [3] Hereford steers fed only maize silage and 0.4 kg protein supplement per day, average weight 354 kg. — [4] Same steers fed 75% maize, 20% maize silage and 0.8 kg soybean oil meal per day — [5] Wet weight. — [6] Dry weight. — [7] Dry matter basis.

Feedlot manure piles could be a valuable source of protein for animal feeds. (Photo: John M. Blanchard)

grass hay was fed to growing steers, it was found that a 40 to 70 percent wastelage ration resulted in weight gains almost equal to the control ration containing 62 percent maize silage (Harpster *et al.*, 1975). Rations containing 100 percent wastelage depressed weight gains by about one half compared to the control ration. The digestion of dry matter by sheep was 66.9 and 47.2 percent respectively when they were fed 50 and 100 percent wastelage.

The digestibility of raw manure mixed with conventional feeds has been studied by Anthony (1970). Of four groups of cattle, two received control rations and the other two received either cooked or washed manure as a fraction of the ration. Treated manure (either cooked or washed) was fed following blending with control ration ingredients at a ratio of 40:60. Dry matter and crude protein digestion coefficients were not lowered by adding manure to the concentrate. All rations were readily consumed and gains of fattening steers were essentially equal to those obtained by animals fed control rations. Cooking or washing before mixing with concentrate did not improve the feeding value.

Other processing methods. Smith *et al.* (1969) studied *in vitro* digestibility of faeces subjected to treatment with alkalis and oxidants. They concluded that chemical treatment enhanced the digestibility of cell wall constituents of ruminant faeces. NaOH was more economical and resulted in non-specific degradation of hemicellulose, cellulose and lignin, making them more accessible to microbial fermentation in the rumen.

A recently described method for processing cattle manure involves the addition of formaldehyde to reduce odour and spoilage and possibly increase the rumen bypass of protein.

The solids collected from an oxidation ditch containing waste from cattle on a high-energy ration was added to a high-energy ration for feeder steers at levels of 5, 15, or 25 percent on a dry matter basis. The solids were estimated to have 50 percent of the feeding value of maize. Steers needed several days to adjust to the rations containing the solids, and feed consumption declined as the percentage of solids in the ration was increased (Hegg *et al.*, 1975).

Several industrial processes have been developed to exploit the fact that cattle manure can be fractionated into a high-fibre, high-ash, liquid fraction containing a higher percentage of protein and digestible energy. However, the latter fraction requires drying before it can be utilized in most rations. A firm in Colorado has designed plants to accomplish this separation. Their ensiled high-fibre product has a feed value for cattle nearly equal to that of maize silage, while rations containing the dried high-protein (23 percent) fraction resulted in about three fourths the nitrogen retention of a control ration containing soybean meal. The dried high-protein fraction, when fed at 15 to 30 percent of the ration, was compared with conventional protein sources in rations for layers and broilers, and for trout, and resulted in similar growth or egg production (Ward *et al.*, 1975). No clinical

symptoms or histopathology associated with feeding the firm's products were found in any of the animals in the feeding trials.

Another fractionation process developed by a firm in Arizona produces a pelleted feed containing 20 percent protein and 14 percent insoluble ash. No increased accumulation of heavy metals or chlorinated hydrocarbons resulted from feeding this product at 8 to 10 percent of the ration (Senior, 1974).

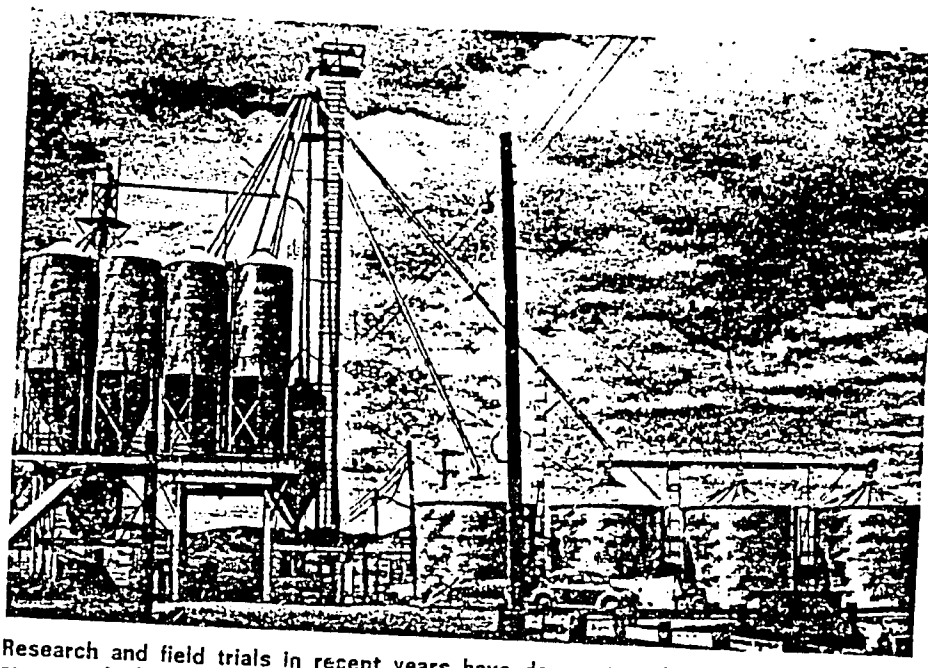

Research and field trials in recent years have demonstrated a variety of uses for manure, including blending with other ration ingredients in industrial plants. (Photo: John M. Blanchard)

Use as poultry feed

Low energy and protein density have limited the use of dried manure in cattle feeding, although before the discovery of vitamin B_{12} cattle manure was fed to poultry as a source of the "animal protein factor" (Hammond, 1942).

Palafox and Rosenburg (1951) included oven-dried and air-dried cow manure in layer and breeder rations at levels of 5, 10 and 15 percent of the diet. Egg production, hatchability and body weight were equal to control up to the 10 percent level. No significant differences were observed in shell thickness or egg quality, but higher levels of dried cow manure produced darker yolks. No androgenic potency was noted, and it was concluded that dried cow manure supplies essential nutrients, especially for hatchability.

Lipstein and Bornstein (1971) observed no toxic effects when dried cow manure was fed to very young chicks; however, it produced decreased growth rates and feed utilization in broilers due to the low content of metabolizable energy.

Health and regulatory aspects

One of the major limitations to recycling animal waste is the potential hazard from pathogens and non-nutritive feed additives. But it should be recognized that cattle are constantly exposed to microbial organisms when they sleep, feed, lick and nibble on manure in feedlot corrals. They also harbour a large microbial population in their digestive tracts.

No clinical abnormalities have been reported in any of the feeding trials listed above. Johnson *et al.* (1975) studied the pathological and parasitological effects of feeding up to 15 percent ground feedlot waste to yearling calves, and concluded that this level had no measurable effect on animal health. Heating manure to 120°C may achieve sterilization, but nutrient digestibility may be sacrificed (Taylor *et al.*, 1974). Reduction of moisture to less than 25 percent by low heating appears adequate; wet manure may provide a favourable environment for pathogen growth during storage.

Wastelage (McCaskey and Anthony, 1975) offers a product with a pH of 4.2 to 4.5 which at a temperature close to 35°C appears to destroy or inhibit pathogen growth to the extent that no abnormalities were produced in long-term feeding trials.

Feed additive residues are another potential hazard, but additives are now less extensively used in cattle feeding than formerly. Federal regulatory agencies in the United States have not given approval for feeding animal waste, but currently the Departments of Agriculture in three of the States have published guidelines for feeding dried or processed wastes. The United States Food and Drug Administration regulations state that the use of poultry manure or litter as a feedstuff for animal feed is not sanctioned, but cattle manure is not mentioned specifically. Taylor *et al.* (1974) have outlined what the FDA considers necessary for acceptance of animal waste as a feedstuff. In 1973 United Kingdom regulations did not prohibit the addition of manure to feedstuffs, but the EEC countries prohibited adding manure or litter to feedstuffs (Blair and Knight, 1973). Feedlot waste apparently is acceptable as a feedstuff in Mexico (Martin, 1974).

Conclusions

Research studies have clearly demonstrated that cattle waste will be eaten in large quantities by cattle and sheep, and that it contains nutrients that can be utilized. Protein is the most valuable nutrient. The feeding trials reviewed in this article indicate the wide variation encountered in the nutritive value of cattle manure. This is attributed to differences in the ration fed, the surface

from which the manure was collected, and storage or drying conditions. Manure from cattle fed high forage rations generally has a low feed value.

The loss of nutrients under natural drying conditions is not well documented but is certainly important. Although cattle manure has been artificially dried for use in feeding trials, it seems unlikely that this would be economic under commercial conditions. Drying at high temperatures may depress digestibility. Fresh manure has a higher feed value, but it cannot be mixed directly in rations. It can be ensiled with other feeds if an adequate collection system and silos are available.

Manure can be chemically treated to improve the digestibility of fibre, but the process has not been economic. Processing methods to separate a major part of the fibre and insoluble minerals have been developed, but expensive machinery and drying of the high-protein fraction from manure are required. This protein fraction has been shown to be of value to both cattle and non-ruminant animals.

Feeding trials with fresh or dried cattle manure and manure products have not resulted in any evident disease or pathological conditions. Nevertheless, the practice is not widely approved by regulatory agencies. No differences in the quality of meat from animals fed waste have been detected, nor has there been a problem of consumer acceptance in cases where it was studied.

References

ALBIN, R.C. & SHERROD, L.B. 1975. Nutritional value of cattle feedlot waste for growing-finishing beef cattle. In *Managing livestock wastes. Proceedings of the 3rd International Symposium on Livestock Wastes, April 21-24, 1975, University of Illinois*, p. 211. American Society of Agricultural Engineers. Proceedings-275.

ANTHONY, W.B. 1970. Feeding value of cattle manure for cattle. *J. Anim. Sci.*, 30: 274-277.

ANTHONY, W.B. 1974. Nutritional value of cattle waste for cattle. *Fed. Proc.*, 33: 1939-1941.

AZEVEDO, J. & STOUT, P.R. 1974. *Farm animal manures: an overview of their role in the agricultural environment.* Berkeley, California Agricultural Experiment Station. Extension Service Manual 44.

BLAIR, ROBERT & KNIGHT, DAVID M. 1973. Recycling animal wastes. *Feedstuffs*, March 1973: 32-34.

FERRELL, C.L. & GARRETT, W.N. 1973. Observations concerning the use of cattle manures in drylot feeding. *California Feeders Day*, p. 4-14.

GRABER, RICHARD. 1973. *Agricultural animals and the environment.* Stillwater, Oklahoma State University. Feedlot Waste Management Regional Extension Project.

HAMMOND, J.C. 1942. Cow manure as a source of certain vitamins for growing chickens. *Poultry Sci.*, 21: 554.

HARPER, JUDSON M. & SECKLER, DAVID. 1975. Engineering and economic overview of alternative livestock waste utilization techniques. In *Managing livestock wastes. Proceedings of 3rd International Symposium on Livestock Wastes, April 21-24, 1975, University of Illinois*, p. 22-25. American Society of Agricultural Engineers. Proceedings-275.

HARPSTER, H.W., LONG, T.A., LALONDE, C.M. & SAYLOR, W.W. 1975. Nutritive value of ensiled cattle waste. *J. Anim. Sci.*, 41: 240-241.

HEGG, R.O., LARSON, R.E., MOORE, J.A., GOODRICH, R.D. & MEISKE, J.C. 1975. Recycling solids from an aerated beef slurry for feed. In *Managing livestock wastes. Proceedings of 3rd International Symposium on Livestock Wastes, April 21-24, 1975, University of Illinois*, p. 197-198. American Society of Agricultural Engineers. Proceedings-275.

HULL, J.L., RAGUSE, C.A. & MORRIS, J.C. 1973. Feedlot animal waste as a supplement for pregnant range cows. *California Feeders Day*, p. 12-14.

JOHNSON, R.R. 1972. *Digestibility of feedlot waste.* Stillwater, Oklahoma Agricultural Experiment Station. Miscellaneous Publication, 87: 62-65.

JOHNSON, R.R., PANCIERA, R., JORDAN, H. & SHUYLER, L.R. 1975. Nutritional, pathological and parasitological effects of feeding feedlot waste to beef cattle. In *Managing livestock wastes. Proceedings of 3rd International Symposium on Livestock Wastes, April 21-24, 1975, University of Illinois*, p. 203-205. American Society of Agricultural Engineers. Proceedings-275.

LIPSTEIN, B. & BORNSTEIN, S. 1971. Value of dried cattle manure as a feedstuff for broiler chicks. *Israel J. agric. Res.*, 21: 163.

MCCASKEY, T.A. & ANTHONY, W.B. 1975. Health aspects of feeding animal waste conserved in silage. In *Managing livestock wastes. Proceedings of 3rd International Symposium on Livestock Wastes, April 21-24, 1975, University of Illinois*, p. 230-233. American Society of Agricultural Engineers. Proceedings-275.

MCCLURE, K.E., VANCE, R.D., KLOSTERMAN, E.W. & PRESTON, R.J. 1971. Digestibility of faeces from cattle fed finishing rations. *J. Anim. Sci.*, 33: 292.

MARTIN, A.G. 1974. Feedlot poultry wastes used regularly in feeds produced by Mexican firm. *Feedstuffs*, 29 April 1974: 40.

MASON, V.C. 1969. Some observations on the distribution and origin of nitrogen in sheep faeces. *J. agric. Sci., Camb.*, 73: 99.

PALAFOX, A.L. & ROSENBURG, M.M. 1951. Dried cow manure as a supplement in a layer and breeder ration. *Poultry Sci.*, 30: 136.

SENIOR, FRANK C. 1974. The feed recycle process. *Food, fuel, fertilizer, Canadian Plains Proceedings*, p. 12-25.

SMITH, L.W., GOERING, H.K. & GORDON, C.H. 1969. Influence of chemical treatments upon digestibliity of ruminant faeces. *Proceedings, Conference on Animal Waste Management, Cornell University, Ithaca, N.Y.*, p. 88-97.

SMITH, L.W. 1973. Recycling animal wastes as protein sources. In *Alternative sources of protein for animal production, Proceedings of a Symposium, National Academy of Sciences, Washington, D.C., 1973.*

SMITH, L.W. 1974. Dehydrated poultry excreta as a crude protein supplement for ruminants. *Wld Anim. Rev. (FAO)*, 11: 6-11.

TAYLOR, JACK C., GABLE, DONALD A., GRABER, GEORGE & LUCAS, ERNEST W. 1974. Health criteria for processed wastes. *Fed. Proc.*, 33: 1945-1946.

TINNIMIT, P. YU YU, MCGUFFEY, K. & THOMAS, J.W. 1972. Dried animal waste as a protein supplement for sheep. *J. Anim. Sci.*, 35: 432-435.

WARD, G.M., JOHNSON, D.E. & KIENHOLZ, E.W. 1975. Nutritional properties of feedlot manure fractionated by Cereco process. In *Managing livestock wastes. Proceedings of 3rd International Symposium on Livestock Wastes, April 21-24, 1975, University of Illinois*, p. 208-210. American Society of Agricultural Engineers. Proceedings-275.

WESTING, TOM W. & BRANDENBURG, BILL. 1974. Beef feedlot waste in rations for beef cattle. *Conference on Processing and Management of Agricultural Wastes, Cornell University, March 25-27, 1974*, p. 336-341.

YECK, ROBERT G., SMITH, L.W. & CALVERT, C.C. 1975. Recovery of nutrients from animal wastes — an overview of existing options and potentials for use in feed. In *Managing livestock wastes. Proceedings of 3rd International Symposium on Livestock Wastes, April 21-24, 1975, University of Illinois*, p. 192-194. American Society of Agricultural Engineers. Proceedings-275.

Dehydrated poultry excreta as a crude protein supplement for ruminants

XIV-CA-1

L.W. SMITH

Predictions were made during the 1960s that world demand for protein would soon exceed supply from conventional sources. At the same time, intensive animal production systems were generating waste excreta in localized polluting concentrations. These highly nitrogenous wastes represented a potential source of crude protein for ruminant animals. If a nutritionally safe way could be developed to recycle these waste nutrients back into animal feeds, the double purpose of conserving protein and alleviating pollution would be served.

Recent reports have reviewed the nutritive value of recycled animal excreta in animal production systems (Smith, 1973). The use of caged laying hen excreta (manure free of litter) as a crude protein source for ruminants was selected for discussion in this article because this system produces the most efficiently used excreta nutrients, offers the greatest pollution reduction potential through ruminant use, is nearest to commercial implementation and is safest from health hazards.

There were about 329 million chickens of egg-laying age in the United States in 1971. Because chickens excrete an average of 28 g of dry excreta per day, the United States produces about 3.7 million dry tons of this waste each year. With several assumptions, it can be shown that excreta from 18 hens could provide sufficient supplemental crude protein to grow and finish one beef animal. The assumptions are:

1. That chickens excrete an average of 28 g dry excreta per day, containing a minimum of 30 percent crude protein.
2. That the beef animal would consume on the average 6.5 kg per day of a 11.5 percent crude protein ration.
3. That the beef animal would gain on the average 1.0 kg per day between a starting weight of 150 kg and finished weight of 450 kg.
4. That the other main ingredient in the beef animal's ration is maize meal.

With these assumptions, it can be calculated that the caged layer excreta

TABLE 1. Composition of dehydrated caged layer excreta

Source	Organic matter	Cell walls	Crude fibre	Nitrogen-free extract	Lignin	Ether extract	Crude protein[1]	Calcium	Phosphorus
	Percentage of dry matter								
UNITED STATES									
Florida	64.8	—	10.7	25.6	—	0.7	27.9	10.9	2.2
Pennsylvania	76.2	—	8.0	21.0	—	1.3	45.9	6.9	2.6
Beltsville	72.3	35.9	—	—	3.4	—	32.5	7.3	2.0
New York	72.6	—	—	—	—	1.4	36.9	9.3	1.5
Michigan	74.9	—	11.8	—	—	2.3	24.7	7.8	2.6
UNITED KINGDOM	83.3	—	8.2	39.3	—	1.4	26.6	8.3	2.4
Standard deviation	5.5	—	1.6	7.8	—	0.5	7.3	1.3	0.4
Coefficient of variation (%)	7.43	—	16.49	27.27	—	35.71	22.53	15.48	18.18

SOURCE: Analytical results obtained from literature, private laboratories, and Biological Waste Management Laboratory, U.S. Department of Agriculture, Beltsville, Maryland.
[1] Nitrogen × 6.25.

L.W. SMITH is Research Animal Scientist, Biological Waste Management Laboratory, Agricultural Environmental Quality Institute, Agricultural Research Service, U.S. Department of Agriculture, Beltsville, Maryland 20705.

104

produced in the United States in 1971 could have provided the crude protein to grow and finish about half the cattle slaughtered in the country that year.

Several methods exist that would be suitable for processing poultry excreta for recycling as ruminant feed supplements. These include dehydration, pelleting, dry-heat treatment, aerobic fermentation, anaerobic fermentation, or combinations of these processes. Dehydration appears to be the most practical of these, and provides a product which permits greater flexibility in use.

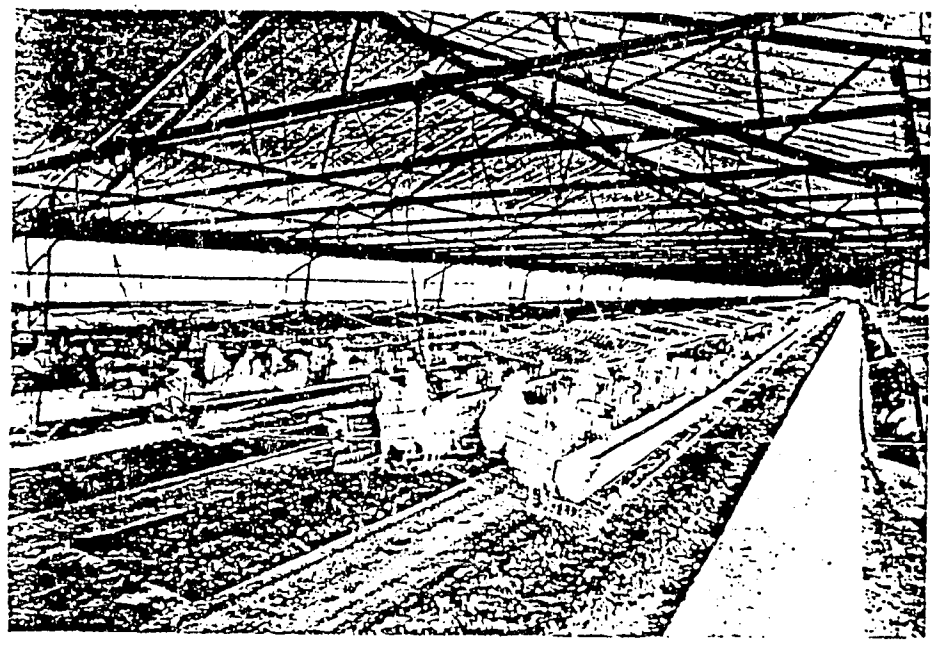

1. *Open-sided structure for housing caged layers in mild to warm climates. Moisture loss from the excreta is a result of natural environment.*

Chemical composition

The variability in composition of poultry excreta (Table 1) is the result of several factors that include dietary and physiological status, age of the excreta before stabilization and the temperature of drying. It has been observed that hens fed diets with 18 percent crude protein produced excreta containing 38 to 46 percent crude protein, whereas hens fed diets with 16 percent crude protein produced excreta containing 28 to 36 percent crude protein.

Increased storage time and drying temperature reduce the nitrogen retained in dehydrated excreta. The author has observed up to 30 percent nitrogen loss during dehydration; this loss can be attributed to original moisture content and age of the excreta before dehydration. Nitrogen is probably lost as ammonia-nitrogen and as the result of bacterial degradation of protein and uric acid. However, data are not available for a full evaluation of the relative significance of factors affecting nitrogen losses from dehydration.

The moisture content of hen excreta varies in relation to the physiological status of the hen and environmental conditions. The house shown in Figure 1 is located in the southern United States where moisture loss is a result of natural environment. Dry-matter content of excreta from such a house can be as high as 80 percent. The excreta handling system shown in Figure 2 is similar to one developed by Bressler and Bergman (1971) for use in caged layer houses in cooler climates. Moisture is reduced by mechanical stirring and constant air movement provided by fans. The resulting dry-matter content of excreta is generally higher than 40 percent, and varies with relative humidity, temperature, stirring frequency and air velocity.

Data in Table 2 show the costs (February 1974 prices) of dehydrating caged layer excreta of two moisture contents. These data were collected during the operation of a rotary-drum dehydrator (Figures 3 and 4) rated by the manufacturer to remove 1 000 pounds of moisture per hour. Costs for transportation, other necessary equipment and raw material fluctuate widely, and were not included in this evaluation. Excreta contains about 25 percent dry matter when dropped by the hen, and it would not normally be below this figure unless water were added to flush the gutters.

Digestibility of dehydrated poultry excreta

In vivo digestibilities of dry matter, organic matter and nitrogen of dehydrated poultry excreta fed to sheep

2. *System of automatically timed scrapers for stirring and cleaning manure pits under caged layers. Intermittent mechanical stirring and constant air movement provided by fans aid moisture loss and odour control.*

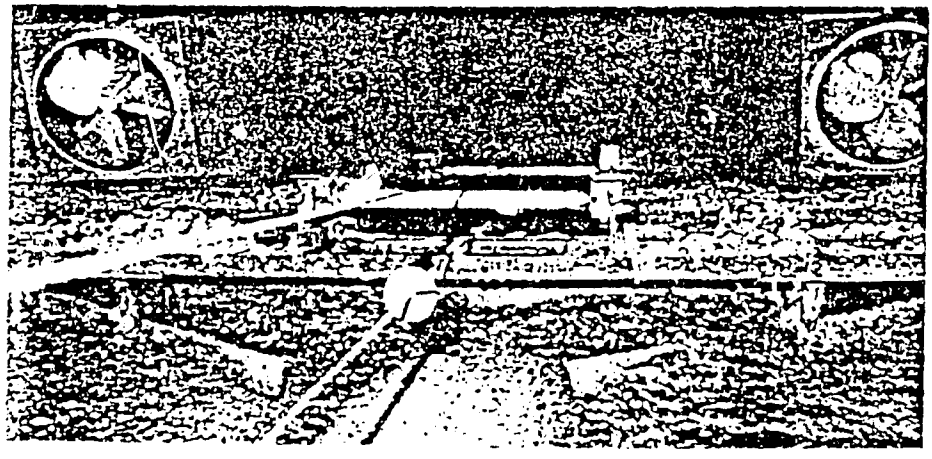

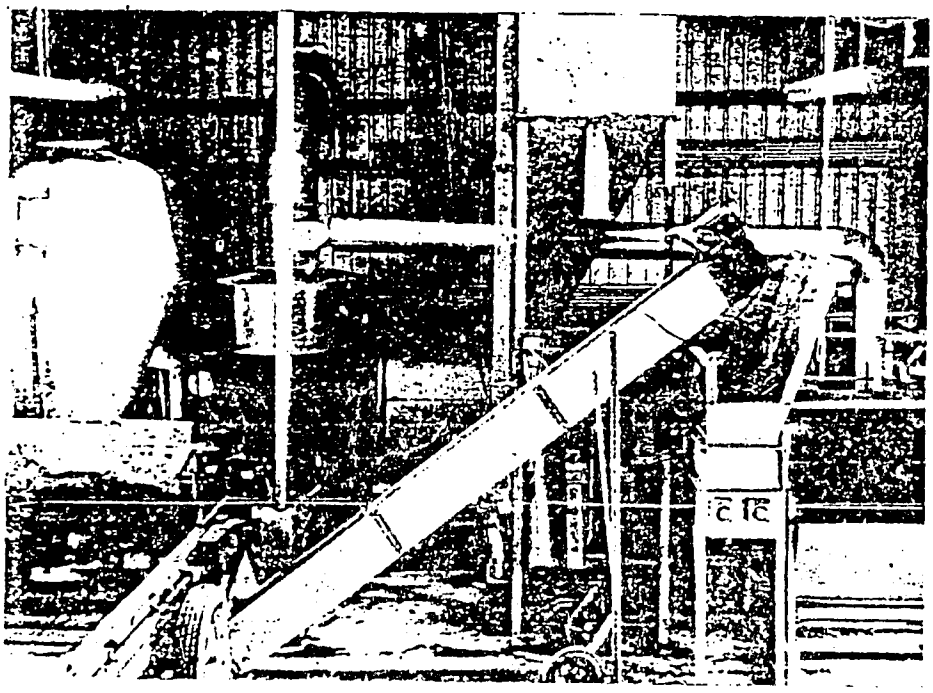

3. *The dehydrator used to process poultry excreta at the Biological Waste Management Laboratory, Beltsville, Maryland.*

4. *Diagram of the dehydrator pictured above. Dry material is recycled and blended with wet material to obtain a mixture with crumbly physical properties for efficient dehydration.*

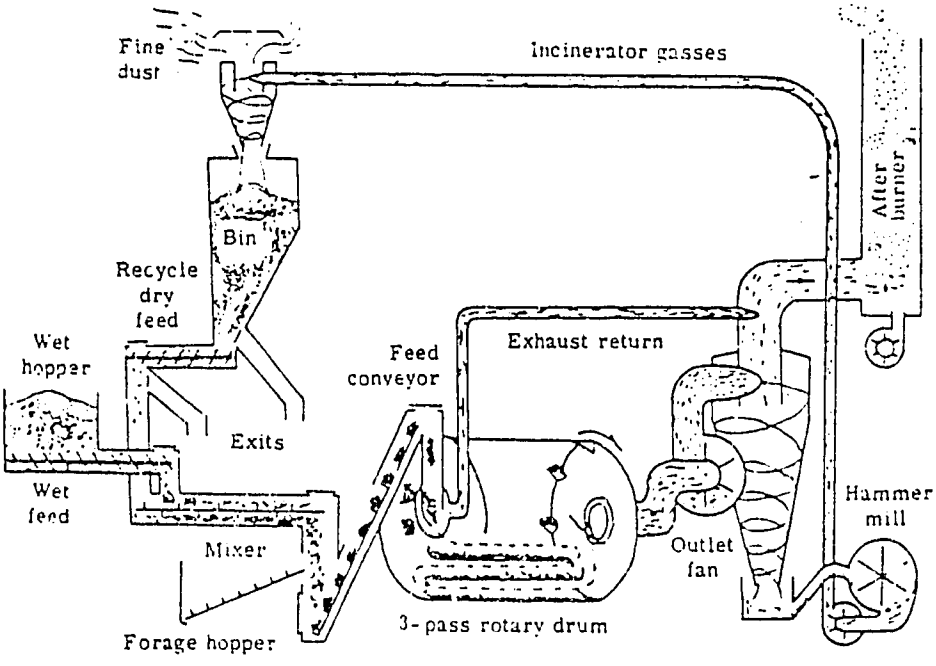

are presented in Table 3. These digestibilities determined with sheep should be generally applicable to other ruminants: however, the known ovine versus bovine difference documented for conventional feedstuffs must be recognized. Two methods were used by the different researchers to derive these digestibility measurements: (1) feeding only processed excreta; (2) feeding excreta in combination with feeds of known digestibilities and calculation of coefficients by difference. Fair agreement of coefficients is shown, considering the limited number of determinations and possible range in composition of the excreta fed.

The apparent digestibility of crude protein by ruminants increases with crude protein content in concentrates, forage, or mixed rations (Blaxter and

5. *Relationship between the crude and digestible protein concentrations of rations containing 19 to 100 percent dehydrated broiler excreta compared with fresh forage.*

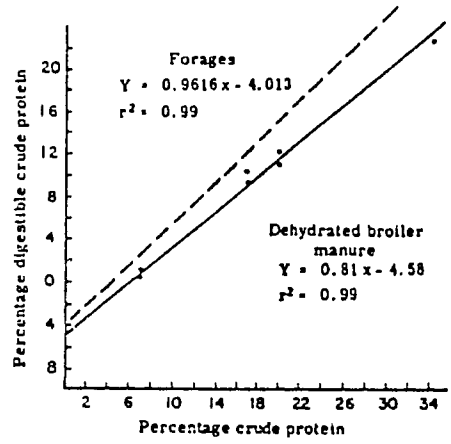

Mitchell, 1948; Dijkstra, 1966). This high correlation (r = 0.96 to 0.99) has been used to predict digestible protein from crude protein content. "True" digestibility of crude protein is estimated by the slope of the regression of digestible crude protein (Y) on crude protein content (X) in dry matter. Figure 5 shows the results of feeding rations containing 19 to 100 percent dehydrated broiler excreta to sheep. Other low-nitrogen ingredients in the rations were molasses, solka floc (cellulose) and maize starch. "True" digestibility of crude protein in dehydrated broiler excreta was estimated to be 81 percent, compared with 96 percent for fresh forages. However, estimates from other data in the literature were similar to those estimated for conventional feeds (Smith, 1973). The relatively high "true" digestibility estimates for crude protein in dehydrated poultry excreta could result in misinterpretation of its use as a nitrogen source for ruminants, due to its high nonprotein nitrogen (NPN) content. Most of this NPN is uric acid nitrogen, which could have a theoretical or "true" digestibility of 100 percent, similar to urea nitrogen in this system. Because the "true" digestibility of nitrogen from poultry excreta implies nothing of its efficiency of use for productive functions, supporting nitrogen utilization data are necessary for a more critical evaluation of this product. Uric acid

TABLE 2. Cost per ton[1] of drying hen manure in rotary drum with afterburner

		Input dry matter	
		44%	25%
HOURS		2.06	5.20
		... *U.S. dollars* ...	
COSTS			
Depreciation:	$55.000/15 years[2]	1.51	3.83
Labour:	$ 3.00/hour	7.20	18.20
Fuel:	29.5 gal/hour, $0.38/gal	23.10	58.00
Electricity:	21 kW, $0.02/kWh	0.28	0.73
Operating cost per ton		32.09	80.76

[1] 90 percent dry matter. — [2] Straight-line depreciation based on operation 16 hours/day, 6 days/week.

was evaluated as a source of dietary nitrogen in purified diets of steers and found to compare favourably with other NPN sources (Oltjen *et al.*, 1968). Nitrogen from poultry excreta was retained and used for growth (El Sabban *et al.*, 1970; Tinnimit *et al.*, 1972; Smith *et al.*, 1973).

The digestibility of plant cell walls in dehydrated poultry excreta as determined by an *in vitro* method was found to be 60-76 percent.

Performance

Animal performance, whether in terms of growth, fattening, lactation or reproduction, is the result of nutrient intake, digestion, absorption and use.

TABLE 3. *In vivo* digestibilities of dehydrated poultry excreta fed to sheep

Level fed	Digestibility		
	Dry matter	Organic matter	Nitrogen
... *Percent* ...			
100	54	61	67
100	57	67	77
32	39	—	58

SOURCES: Smith and Calvert, 1972; Lowman and Knight, 1970; Thomas *et al.*, 1970.

Some aspects of digestibility, absorption and use have already been discussed. High-level voluntary intake is of equal importance to other factors in achieving satisfactory animal performance. Difficulties have sometimes been reported in achieving adequate levels of consumption with rations containing dehydrated poultry excreta (Bucholtz *et al.*, 1971; Bull and Reid, 1971; Tinnimit *et al.*, 1972; Thomas *et al.*, 1972). Adaptation periods of 7 to 21 days were necessary before maximal levels of intake were achieved. Bucholtz *et al.* (1971) observed that steers discriminated against dehydrated poultry excreta and sorted out shelled maize and maize silage.

Sorting and adaptation difficulties were virtually eliminated at the Beltsville laboratory by pelleting complete rations (Figure 6). However, a problem remained when pelleted concentrate containing dehydrated poultry excreta was fed with maize silage: lower consumption by lactating cows of both the concentrate and the maize silage was observed. Possibly the moist silage permitted ammonia release from the pellets and this affected consumption.

Dehydrated poultry excreta has been fed as a crude protein supplement to beef cattle, sheep, and lactating dairy cattle. El Sabban *et al.* (1970) compared the value of soybean meal, autoclaved poultry waste, dehydrated poultry waste and urea in ground shelled maize and timothy hay rations

6. *Dehydrated poultry excreta, control ration (86.2 percent maize meal, 12.8 percent cottonseed meal and 1.0 percent dicalcium phosphate), and experimental ration (79.5 percent maize meal, 20.5 percent dehydrated poultry excreta).*

DRIED POULTRY EXCRETA

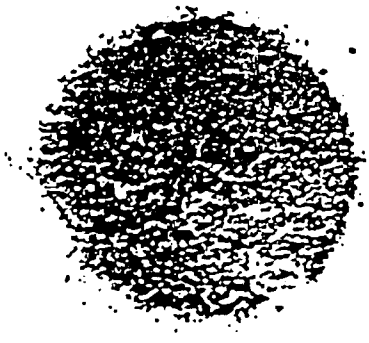

CONTROL RATION

EXPERIMENTAL RATION

for fattening steers. Steers fed the ration containing urea gained faster (1.43 kg/day) than steers fed the ration containing dehydrated poultry waste (1.15 kg/day). Differences in gain among the steers fed soybean meal, autoclaved poultry waste and dehydrated poultry waste were not significant. Feed to gain ratios were lowest (8.2) for steers fed the urea ration. Smaller differences in this ratio (10.0-10.8) were observed among the other three rations.

Dehydrated poultry waste, soybean meal, urea, and 1:1 combinations of dehydrated poultry waste to soybean meal or urea based on nitrogen content were added to maize silage and rolled shelled maize rations in tests for fattening steers (Bucholtz *et al.*, 1971). All rations were formulated to contain 12 percent crude protein. The group fed the soybean meal supplement gained 1.52 kg/day, whereas the urea group gained 1.41 kg/day; both gains were greater (P 0.05) than those of the groups fed other supplements, which gained from 1.25 to 1.38 kg/day. Feed to gain ratio was the lowest (6.96) on the soybean meal ration and highest (10.43) on the dehydrated poultry excreta ration.

Dehydrated poultry excreta was fed as a protein supplement to growing sheep (Thomas *et al.*, 1972; Smith *et al.*, 1973). Thomas *et al.* observed that sheep fed 19 percent crude protein rations containing 61 or 90 percent total protein from dehydrated excreta gained significantly less (0.16 kg/day) than sheep fed a control soybean meal ration (0.21 kg/day). However, Smith *et al.* reported that gains (0.18-0.19 kg/day) were not significantly different for sheep fed complete pelleted rations where 0 to 40 percent of the crude protein was provided with dehydrated poultry excreta. The primary difference between these two experiments was in the crude protein level fed, and therefore in the supplemental dehydrated excreta necessary to obtain that level. The high supplemental levels of excreta needed to obtain 19 percent crude protein rations could account for the lower gain. In addition to supplying crude protein, mainly in the form of nonprotein nitrogen, excreta contains a relatively large amount of ash which has the effect of lowering organic matter content in the total ration.

Dehydrated poultry excreta has been utilized to supplement rations for lactating cows (Bull and Reid, 1971; Thomas *et al.*, 1972; Smith and Fries, 1973). Bull and Reid concluded that poultry excreta can serve as the sole source of supplemental nitrogen for cows producing at least 28 kg milk per day. In a more extensive trial, Thomas *et al.* found that milk from cows fed poultry excreta was indistinguishable from that from cows fed crude protein from conventional sources. In a 90-day trial, Smith and Fries found that cows fed a poultry excreta concentrate consumed less maize silage and concentrate dry matter, gained less weight and produced less milk than cows fed a control concentrate.

However, the ratios of feed dry-matter intake to fluid milk production were the same, suggesting a nearly equal use of nutrients.

Meat and milk from animals fed rations containing excreta have been evaluated by taste panels, and found indistinguishable from control products (El Sabban *et al.*, 1970; Bull and Reid, 1971; Thomas *et al.*, 1972). Carcass evaluations conducted on excreta-fed animals were similar to those on control-fed animals (El Sabban *et al.*, 1970; Bucholtz *et al.*, 1971; Thomas *et al.*, 1972).

Effect on animal health and food safety

The feeding of animal excreta products is not sanctioned by the U.S. Food and Drug Administration at the time of writing because of potential hazards from disease organisms and drug residues (Taylor, 1972).

Problems of disease have not been associated with feeding dehydrated poultry excreta, as evidenced by the fact that no such cases are documented in scientific literature to date. Figures 7 and 8 show examples of animals fed excreta-supplemented rations for up to 184 days without apparent ill effects. The steer in Figure 8 was seven and a half months old at the start of the trial, weighed 235 kg, and gained 0.91 kg per day during the period.

No toxicological problems have been reported for animals on rations containing dehydrated poultry excreta. Excreta from caged layers would not normally contain residues of medicants because these are not included in routine layer diets. When medicated rations are fed to poultry to control health problems, their excreta should not be used for refeeding unless information establishing its safety is available.

Potential disease transmission from poultry to cattle does exist but is not a likely hazard. Cattle fed rations containing dehydrated poultry excreta at Beltsville were intradermal-tuberculosis tested by the caudal method after 241 days on this feed. All cattle were negative to this test. Bacteria such as *Salmonella* or fecal coliforms can be eliminated from excreta by several feasible methods which include dehydration, ensiling or fermentation. The heating associated with dehydration and pelleting has been sufficient to eliminate these bacteria in trials in the laboratory. Exhaust temperature of the dehydrator is maintained at 80°C, and the excreta is kept in the drum about 45 minutes. These conditions are more severe than those for the "high-temperature (71°C) short-time (15 seconds) method" of pasteurization. However, it should be pointed out that the dehydrated product is not sterilized.

Conclusions

Dehydrated excreta from caged layers has substantial nutritional value for ruminants. Properly dehydrated poultry excreta is especially high in crude protein (30 to 45 percent) and is a source of energy; both appear to be efficiently used by the ruminant. Although intake is not usually a problem, more ingenious processing and formulative advances are necessary in order to achieve more general use.

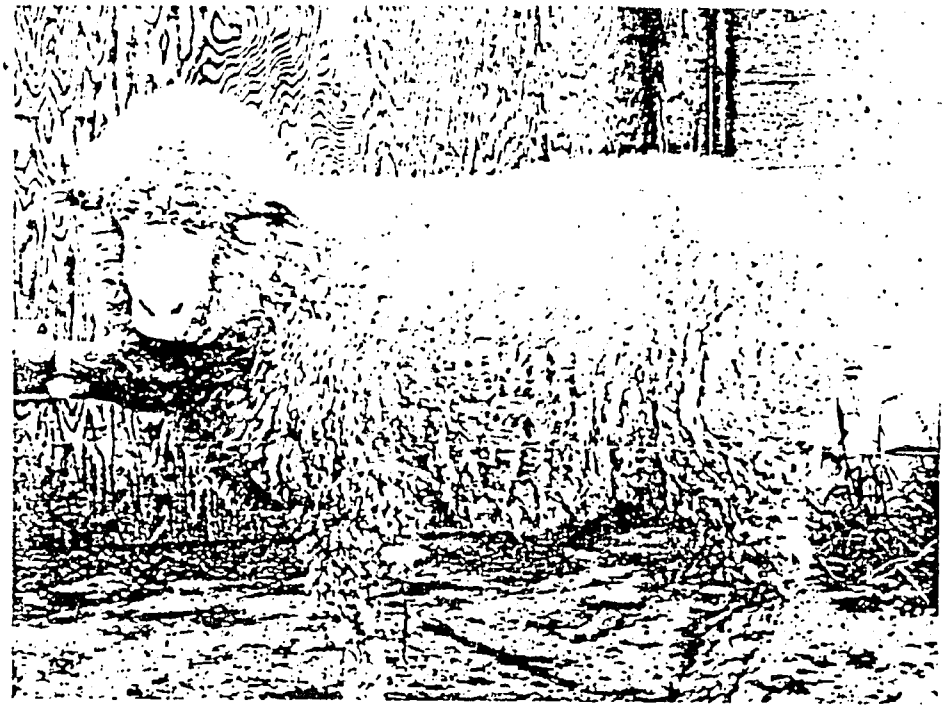

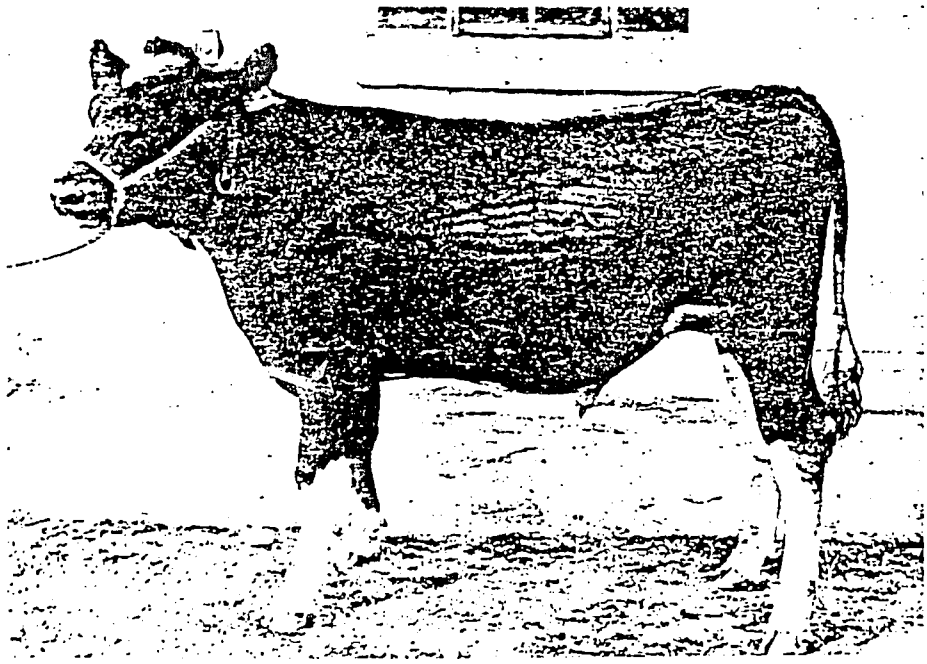

7 and 8. *Animals fed the experimental ration in Figure 6 without apparent ill effects. The wether was fed the ration for 160 days, and the steer for 184 days.*

No deleterious effects on ruminant health from feeding processed poultry excreta have been reported in the literature. Excreta free of feed additive residues is available for processing as ruminant feed because neither routine nor extensive medication of layer diets is practised.

Poultry excreta is an economical protein supplement for ruminants because the cost of the dehydration process (the major item of expense) is relatively low compared with current costs of conventional feeds. However, poultry excreta should not be fed to ruminants until cleared by the appropriate agencies for such use.

References

BLAXTER, K.L. & MITCHELL, H.H. 1948. The factorization of the protein requirements of ruminants and of the protein values of feeds, with particular reference to significance of the metabolic fecal nitrogen. *J. Anim. Sci.*, 7: 351-372.

BRESSLER, G.O. & BERGMAN, E.L., 1971. Solving the poultry manure problem economically through dehydration. Livestock waste management and pollution abatement. *Proc. Intern. Symp. on Livestock Wastes, Columbus, Ohio*, p. 81-84. St. Joseph, Mich., 49085, ASAE.

BUCHOLTZ, H.F., HENDERSON, H.E., FLEGAL, C.J. & ZINDEL, H.C., 1971. Dried poultry waste as a protein source for feedlot cattle. In *Poultry pollution: research results*. C.C. Sheppard, editor. Michigan State University Research Report 152, p. 28-31.

BULL, L.S. & REID, J.T. 1971. Nutritive value of chicken manure for cattle. *Proc. Intern. Symp. on Livestock Wastes, Columbus, Ohio*, p. 297-300. St. Joseph, Mich. 49085, ASAE.

DIJKSTRA, N.D. 1966. Estimation of the nutritive value of fresh roughage. *Proc. Tenth Intern. Grassland Cong., Univ. Helsinki, Finland*, p. 393-397.

EL SABBAN, F.F., BRATZLER, J.W., LONG, T.A., FREAR, D.E.H. & GENTRY, R.F. 1970. Value of processed poultry waste as a feed for ruminants. *J. Anim. Sci.*, 31: 107-111.

LOWMAN, B.G. & KNIGHT, D.W. 1970. A note on the apparent digestibility of energy and protein in dried poultry excreta. *Anim. Prod.*, 12: 525-528.

OLTJEN, R.R., SLYTER, L.L., KOZAK, A.S. & WILLIAMS JR., E.E. 1968. Evaluation of urea, biuret, urea phosphate and uric acid as NPN sources for cattle. *J. Nutrition*, 94: 193-202.

SMITH L.W. 1973. Recycling animal wastes as protein sources. In *Alternative sources of protein for animal production, Proc. of a symposium, National Academy of Sciences, Washington, D.C.*, p. 146-173. ISBN 0-309-02114-6.

SMITH, L.W. & CALVERT, C.C. 1972. Unpublished data.

SMITH, L.W., CALVERT, C.C. & MENEAR, J.R. 1973. Dehydrated poultry manure as a crude protein supplement for sheep. *Proc. Maryland Nutrition Conference for Feed Manufacturers, University of Maryland, Dept. of Anim. Sci.*, p. 35-44.

SMITH, L.W. & FRIES, G.F. 1973. Dehydrated poultry manure as a crude protein supplement for lactating cows. *J. Dairy Sci.*, 56: 668.

TAYLOR, J.C. 1972. Residues and heavy metal contamination problems caused by refeeding animal wastes. *Proc. Maryland Nutrition Conference for Feed Manufacturers, University of Maryland, Dept. of Anim. Sci.*, p. 32-37.

TINNIMIT, P., YU YU, MCGUFFEY, K. & THOMAS, J.W. 1972. Dried animal waste as a protein supplement for sheep. *J. Anim. Sci.*, 35: 431-435.

THOMAS, J.W. YU YU, & HOEFER, J.A. 1970. Digestibility of paper and dehydrated feces. *J. Anim. Sci.*, 31: 255.

THOMAS, J.W., YU YU, TINNIMIT, P. & ZINDEL, H.C 1972. Dehydrated poultry waste as a feed for milking cows and growing sheep. *J. Dairy Sci.*, 55: 1261-1265.

APPENDIX 7
XVIII-CE-4, P2

FAO SOILS BULLETIN 41

OCT 21 1980 006326

RECEIVED
SEP 25 1980
VITA

china: propagation and small-scale technology

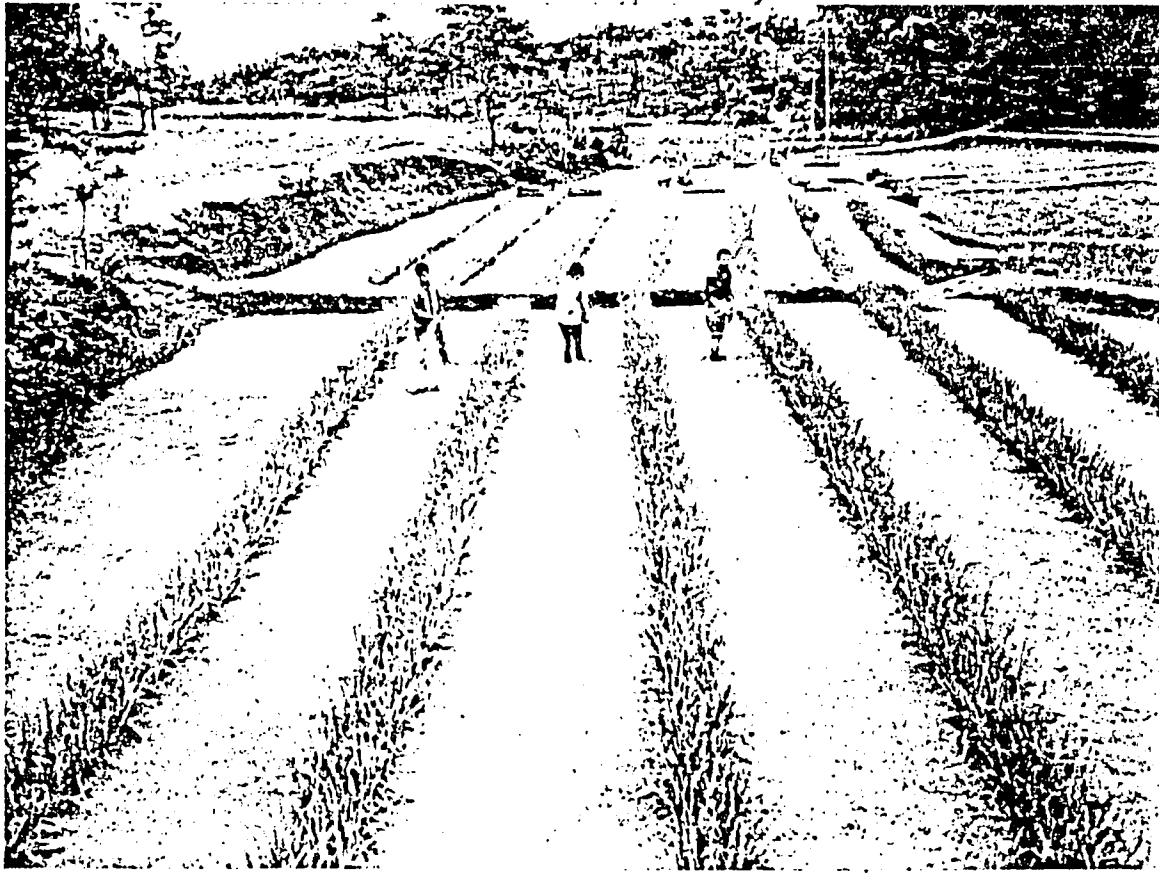

FOOD AND AGRICULTURE ORGANIZATION
OF THE UNITED NATIONS ROME

115

TABLE OF CONTENTS

	Page
LIST OF PLATES	v
LIST OF FIGURES	vii
LIST OF TABLES	viii
INTRODUCTION	ix
ACKNOWLEDGEMENTS	xii
1. PROPAGATION AND AGRICULTURAL USE OF AZOLLA	1
1.1 General	1
1.1.1 Biology of Azolla	1
1.1.2 Fixation of nitrogen	1
1.2 Propagation of Azolla	3
1.2.1 Extent of Azolla cultivation in China	3
1.2.2 Methods of Azolla cultivation	3
1.2.3 Optimum conditions for cultivation of Azolla	4
1.2.4 Preservation of Azolla	9
1.3 Agricultural use of Azolla	9
1.3.1 As green manure	9
1.3.2 As animal feed	14
1.4 Problems in Azolla propagation	14
2. BIOGAS TECHNOLOGY	21
2.1 General	21
2.1.1 Theory of biogas technology	21
2.1.2 Benefits of biogas production	22
2.1.3 Extent of biogas production in China	23
2.2 Construction of biogas units	24
2.2.1 General	24
2.2.2 Size	24
2.2.3 Placement	25
2.2.4 Design	25
2.2.5 Materials for construction	31
2.2.6 Methods of construction	35
2.3 Operation and maintenance of biogas units	44
2.3.1 Inputs	44
2.3.2 Loading	44
2.3.3 Internal mixing	46
2.3.4 Emptying	46
2.3.5 Maintenance	46
2.3.6 Safety precautions	46
2.3.7 Control of disease	50
2.4 Use of biogas	50
2.4.1 Domestic	50
2.4.2 Agricultural	53
2.4.3 Other	57

1. PROPAGATION AND AGRICULTURAL USE OF AZOLLA

1.1 General

Azolla has been used in parts of China for many years as a means of improving the fertility of rice soils and as an animal feedstuff; practices for its cultivation and use have thus been developed to a stage where they can act as a guide for other countries in the same region.

1.1.1 Biology of Azolla

Azolla is a genus of the Azollaceae family of cryptogamic, free-floating ferns. The name is derived from the two Greek words Azo (to dry) and Ollya (to kill) thus reflecting that the fern is killed by drought and so can hardly be considered as descriptively specific.

The genus has six known species: A. pinnata which is the most prevalent species in Asia, A. nilotica (north Africa), A. filiculoides (southern South America to western North America), A. caroliniana (eastern North America and Carribean), A. mexicana (northern South America to western North America) and A. microphylla (tropical and sub-tropical America).

Azolla floats on the water surface with the fronds lying horizontally (Plate 1). The fronds vary greatly in size between species, those of A.pinnata for example, being 1-2 cm in diameter and those of A. nilotica having a diameter of about 15 cm. The colour varies from green to purplish-red (see section 1.1.2).

Adventitious roots hang vertically down into the water and can penetrate mud; their length varies with species, being 1-2 cm for A. pinnata.

Azolla has a sporophytic cycle (Figure 2) and for A. pinnata sporocarp development is associated with the cooler, winter months, whereas for A. filiculoides in temperate regions, development is associated with the summer months. As yet no method of inducing the sporophytic cycle has been found.

1.1.2 Fixation of nitrogen

The importance of cultivating Azolla lies in the fact that it lives in association with a blue-green algal symbiont which fixes enough atmospheric nitrogen for rapid growth of the plant. The blue-green algal species is Anabaena azolla and it lives in cavities of the fern's upper lobes (Figure 3). Thus the Azolla-Anabaena complex offers a source of organic nitrogen fertilizer and may be considered as an aquatic green manure and so, of particular interest in rice cultivation.

The Azolla-Anabaena symbiosis can produce 10^3 kg (1 ton) of green manure per 10^4 m^2 (hectare) per day, containing 3 kg of fixed nitrogen which is equivalent to 15 kg of ammonium sulphate or 7 kg urea. It has been estimated that the developing world, by means of Azolla cultivation could produce one and a half million tons of nitrogen per rice crop.

Experiments have shown that Azolla can double its weight in a nitrogen-free substrate within three to five days and vigorously growing Azolla contains between 0.1% and 0.2% nitrogen, or from 3-5% N on a dry-weight basis.

The relationship, if any, between nitrogen-fixing ability and colour of Azolla has not been satisfactorily settled. At one Commune it was said that young Azolla remains reddish in colour until commencement of nitrogen assimilation causes the colour to change to green. In another Commune (see section 1.2.3), if the Azolla is red, it is sprayed with a solution containing urea and superphosphate. However, it has

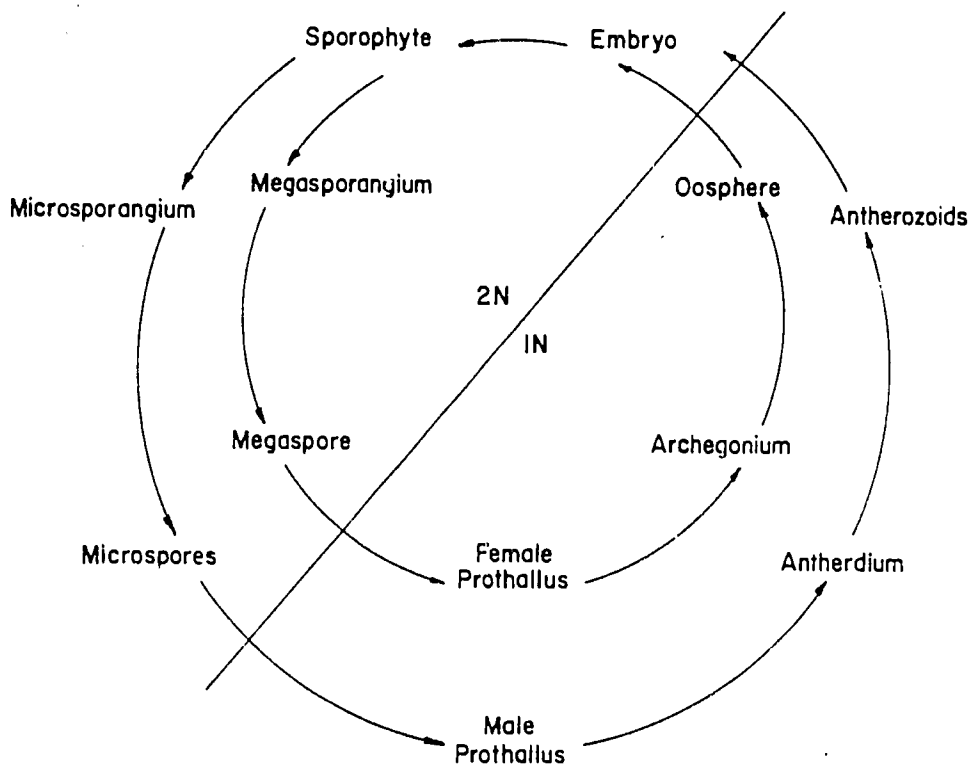

Figure 2. Life cycle of Azolla

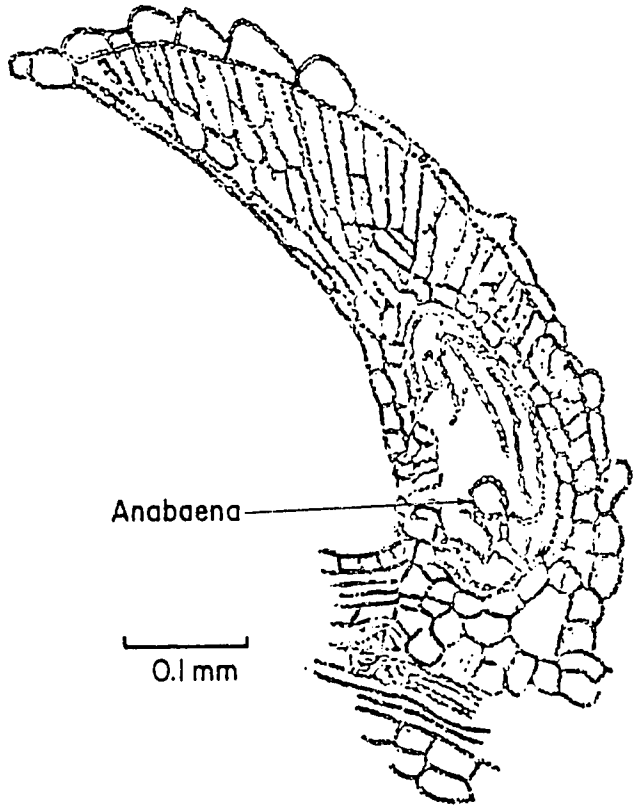

Figure 3. Section through the dorsal lobe of Azolla showing Anabaena filaments (after Strasburger 1873).

been shown that red Azolla contains just as much nitrogen as green Azolla and mature plants can be of either colour. Research at the International Rice Research Institute* has shown that the red colour of Azolla is associated with phosphorus and with calcium deficiency as well as with temperature and this was borne out during discussions with several Chinese experts. In Guangdong Province, the red colour was associated with high summer temperature and in the Changzhou district it was stated that red colour is due to a too dense cover of Azolla. Whether or not there is a relationship between denseness of growth and/or high temperature and availability of phosphorus or calcium has yet to be demonstrated. For practical purposes the colour of Azolla does not seem to affect nitrogen fixation or growth; in most parts of China red and green Azolla were seen in mixed stands. In Vietnam, green, red and purple Azolla are distinguished as three morpho-physiological types or strains; the red Azolla is said to be resistant to high levels of salinity, the purple is resistant to acidity and the green to high temperature.

1.2 Propagation of Azolla

1.2.1 Extent of Azolla cultivation in China

The species of Azolla grown in China is A. pinnata and in Guangdong Province at least, the variety is Imbricata. The plant is known locally as "luping" or "hang ping".

There are records of Azolla cultivation in Zhejiang and Fujian provinces during the Ming dynasty nearly 400 years ago and in Guangdong Province, Azolla has been cultivated for improving rice soils for more than one hundred years and as an animal fodder for even longer. The province normally has about 730 thousand hectare of land devoted to Azolla production.

In Zhejiang Province during modern times, Azolla cultivation has been practised only since 1974 as a consequence of fertilizer and fodder shortage. For example, the Anshi People's Commune has increased the land area used for Azolla ten times (from 40 to 400 ha) since 1974.

Similarly, in Sichuan Province, Azolla has been seriously cultivated only since 1972 and its importance has been emphasized by the creation of special Production Brigades for its propagation (e.g. at the Tumen People's Commune).

Again, in Jiangsu Province, Azolla has been introduced relatively recently but now near Changzhou more than 70% of the rice fields are fertilized with Azolla and in the Hua Shi People's Commune over 10 000 kg/ha (1 500 jin/mu) of Azolla are grown for each rice crop.

It is estimated that over 6.5 million hectare are now cultivated for Azolla production in the country. However, not all China is yet convinced of the need to grow Azolla. At Wuxi, Jiangsu Province, Azolla was introduced in 1965 but since then its use has declined due to shortage of land for other crops. In the Shu Ching People's Commune near Shanghai, Azolla is not cultivated at all as a fertilizer, only on a very small scale in ditches as chicken and pig feed.

1.2.2 Methods of Azolla cultivation

Until such time as a procedure is evolved for initiating the sporophytic cycle, Azolla must be reproduced vegetatively. Two main practices are followed: the plant is grown in small nurseries and then "sown" onto the rice fields for further reproduction or, it is grown over relatively large areas as a green manure crop in its own right.

---

* At Los Baños, the Philippines

In either case it is necessary to maintain a basic stock of viable material throughout the year and this is discussed in section 1.2.4.

Azolla nursery beds are small (3 x 4 m), shallow (10 cm) basins in groups of ten or twenty (Plate 2). Water is maintained to a depth of 3-6 cm and Azolla stock is put into the beds at approximately 1 kg m^{-2}. Rate of reproduction varies according to climatic conditions, especially temperature (see section 1.2.3) and so differs slightly from province to province. In Jiangsu Province only three days are necessary before the nursery beds are fully covered by Azolla ready for harvest. It was claimed that during the period 20 May to 10 July, 0.5 kg of Azolla ultimately produces 3 000 kg; another period of high growth rate is September-October.

The usual rate of multiplication of Azolla is about five-fold over a period of five weeks. Rice fields are "seeded" with Azolla stock at a rate of about 7 500 kg/ha (1 000 jin/mu).

In some parts of China a procedure is used known as 'double narrow rows'. In this procedure rice is grown in double rows about 10 cm apart; a space of about 60 cm is left between each pair of rice rows. Thus a bigger space is left for Azolla to grow and it can be cultivated for one month longer than usual. A record crop has been obtained of over 14 000 kg rice and 140 000 kg Azolla per hectare simultaneously. Every available space is utilized for growth of Azolla. For example during periods when compost pits are not in use as such, they provide small localized Azolla 'nurseries' (Plate 3)

An unusual practice was observed in Sichuan Province. At the Tumen People's Commune, growth of Azolla is encouraged by tapping it with bamboo brushes. Armed with a long-handled brush of bamboo, the farmer advances through the Azolla-covered rice field and gently beats the Azolla mat (Plate 4). This was said to sub-divide the plants and accelerate growth; it is done once a week.

1.2.3 Optimum conditions for cultivation of Azolla

i) Temperature: The optimum temperature range for growing *Azolla pinnata* in China is from 293 K to 298 K (20-25°C). According to information given by those concerned in the Anshi People's Commune near Hangzhou, Azolla will not grow at temperatures below 278 K (5°C) although it can survive at temperatures down to 270 K (-3°C). Above this temperature its growth rate increases over a period of five days, as indicated in Table 2.

Table 2. Effect of temperature on the growth rate of Azolla with reference to the rate at 278 K (5°C).

Water temperature	Increased growth rate
283 K (10°C)	20%
288 K (15°C)	60%
293 K (20°C)	110%
298 K (25°C)	223%
303 K (30°C)	180%
308 K (35°C)	120%
316 K (43°C)	stops growth
318 K (45°C)	90% dies

The Chinese experts were interested to hear of the work being done at the International Rice Research Institute on temperature effects. Experiments have indicated that *A. mexicana* may be able to resist higher temperatures than can *A. pinnata* and that *A. filiculoides* grows best at temperatures below 298 K (25°C). Apparently Malaysian strains of local Azolla are the most tolerant of high temperatures. Other experiments using what is thought to be A. pinnata showed no significant differences in yield or in

Plate 1. Azolla pinnata floating on water surface between rice plants. (Anshi People's Commune, Zhejiang Province).

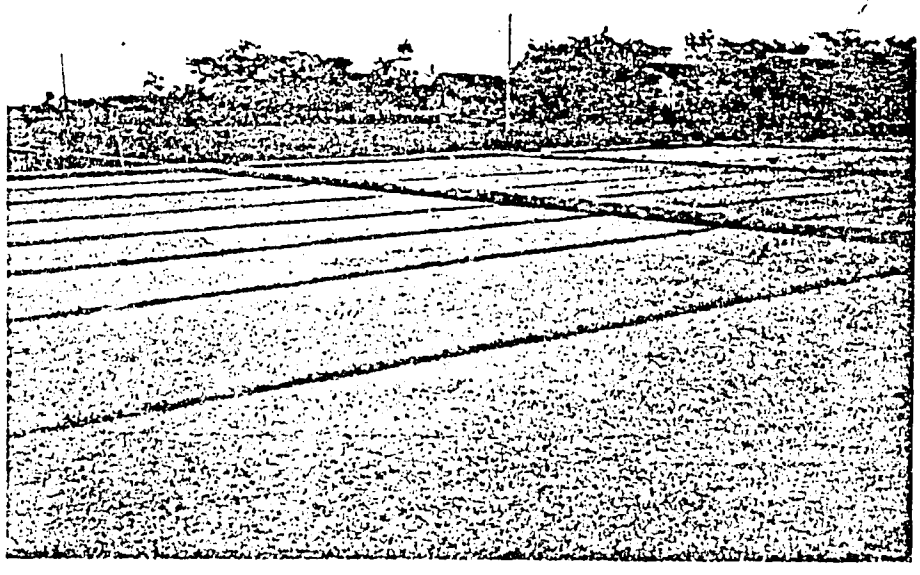

Plate 2. Nursery beds for Azolla pinnata at Anshi People's Commune, Zhejiang Province

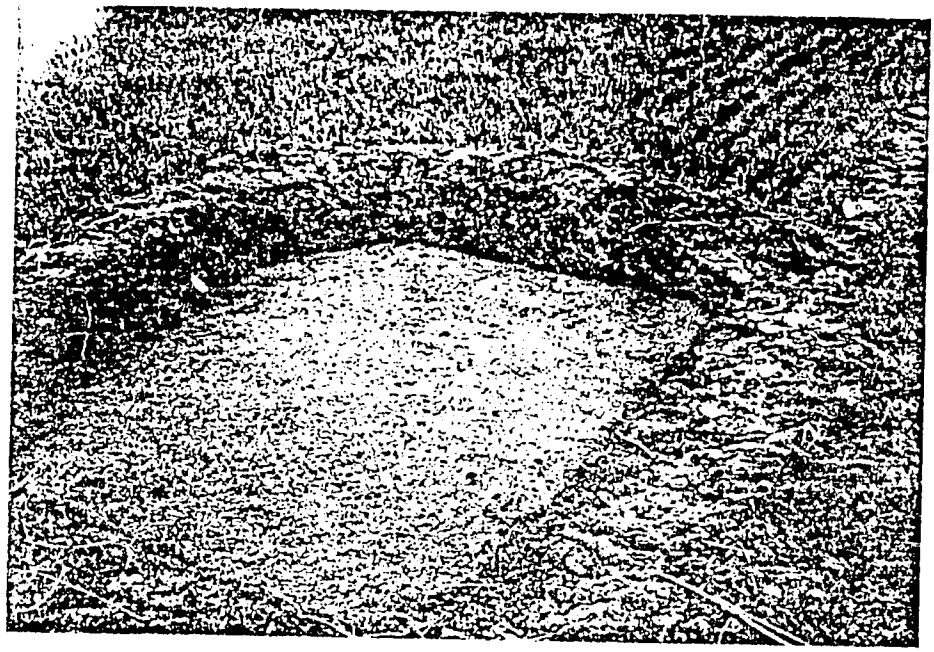

Plate 3. *Azolla pinnata* covering the surface of a compost pit (Anshi People's Commune, Zhejiang Province).

Plate 4. Tapping Azolla beds with bamboo brushes to stimulate growth (Tumen People's Commune, Sichuan Province).

nitrogen accumulation over the average (i.e. of day and night) temperature range of 295-304 K (22-31 °C). When the temperature exceeded 295 K (22 °C) however, reddish-brown discoloration was apparent in the fronds (see also section 1.1.2).

ii) Light: It was said that the optimum solar energy for growth of Azolla is from 20 000 to 50 000 lux (20-50 kcd sr m^{-2}) and that the permissible range is from 5 000 to 100 000 lux (5-100 kcd sr m^{-2}); during the rainy season sunlight was sometimes a limiting factor for growth when Azolla and rice were grown together.

iii) pH value: A neutral (pH 7) reaction has been given (FAO Soils Bulletin No.40, 1977) as the best for growth of Azolla. At the Pin Niu People's Commune near Changzhou, a pH range of 4 to 6 was said to be best and that Azolla is very sensitive to alkalinity. The soils of the Commune however had pH values of up to 8 and Azolla grew quite well on the overlying water. Research made at the International Rice Research Institute has suggested that pH effects are connected with availability of iron and this confirms the acid range of pH 4-6 as being most suitable.

iv) Salinity: For good growth of Azolla, the salt content of the water should be less than 0.1%.

v) Humidity: The optimum relative humidity is 85-90%; at humidities below 60% or higher than 100%, Azolla does not grow.

vi) Nutrients: For optimum growth, Azolla needs fertilization with phosphorus and, in some instances, potassium. At the Anshi People's Commune near Hangzhou experiments on phosphorus fertilization were made during the period mid-April to early May. Phosphorus was added at a standard rate of about 5 kg P/ha (1 jin P_2O_5/mu) using three different forms. Superphosphate gave a 56% increase in weight of Azolla, rock phosphate a 47% increase and fused magnesium phosphate a 22% increase. The phosphorus was added in split applications every two days.

Research at the International Rice Research Institute has shown that phosphorus and calcium deficiencies restrict growth of Azolla and that phosphorus is best added at 2.5 kg/ha every two days, five times in all. As ATP-molecules are necessary for the process of nitrogen fixation, phosphorus is an important limiting factor for Azolla growth.

At the Anshi People's Commune potassium is also needed for Azolla during the winter months and this is sprayed on as a 1% solution of potassium sulphate at a rate of 800 kg K/ha (120 jin K_2O/mu).

Nitrogen fertilization is not usually necessary but at the Hsiachiao People's Commune in Guangdong Province, if the Azolla is reddish-coloured it is sprayed with a solution containing 1% urea and 1% superphosphate. It was not clear however whether or not the urea was necessary as development of green colour could well have been due to the phosphate (see section 1.1.2). At the Anshi People's Commune near Hangzhou, ammonium sulphate is applied at 15 kg/ha during March/April and at any time when rapid growth is required.

A common practice is to fertilize Azolla by means of compost. Compost is prepared from vegetative matter such as straw, mixed with river silt (Plate 5) and in due course is mixed into the Azolla nurseries (Plate 6).

The influence of external factors upon the growth of Azolla is diagrammatically presented in Figure 4.

Plate 5. Preparing compost from a mixture of straw and silt pumped from a river (Hsilang People's Commune, Jiangsu Province).

Plate 6. Compost being mixed into the Azolla beds (Hsilang People's Commune, Jiangsu Province).

1.2.4. Preservation of Azolla

As the plant is reproduced vegetatively, it is necessary to maintain viable stocks throughout the year and this presents problems during the very hot and very cold months. Procedures for solving the problems vary between Communes.

i) Preservation during summer (July/August)

At the Hsiachiao Commune in Guangdong Province, if the water temperature reaches 315 K (42 °C) it is drained off during the night and replaced with fresh cooler water. This is done every night until day temperatures drop to permissible levels.

At the Pin Niu People's Commune near Changzhou, Azolla is kept between widely spaced (1 m) rice plants which provide shade as shown in Plate 4. During this warm part of the year, pests are most active and so pesticides are used to help preserve the Azolla; the pesticide is an organo-phosphorus compound.

A similar procedure is followed in Sichuan by the Tumen People's Commune. An average of 850 m^2 (1 mu) of Azolla is preserved for future propagation and this is grown between widely spaced (1 m) rice on 15 cm of standing water. At noon each day the water is stirred to reduce the surface temperature; pesticides are also applied. If the Azolla layer becomes too dense, as indicated by a rippling or corrogating of the surface mat, it is manually thinned. Summer temperatures in Sichuan reach 308 K (35 °C).

ii) Preservation during winter (November-March)

At the Anshi People's Commune near Hangzhou, Azolla is heaped in pits dug in the rice fields; in very cold weather the pits are covered with plastic sheets.

At the Pin Niu People's Commune near Changzhou, winter temperatures can reach 270 K (-3 °C). Several methods are used to preserve Azolla; in one method, it is placed on 25 cm of water in a pit and covered wdith plastic to keep it air-tight: the water is changed frequently. In another method the Azolla is stored in thin layers at the bottom of 30 cm deep pits and covered with straw (Fig.5). Necessary humidity is provided by a shallow depth of water at the bottom and aeration is provided by means of bamboo pipes. It was said that Azolla can be kept alive in this manner for two months. During the winter months Azolla cannot be transported and should not be touched as movement causes it to die.

A third method used by the Commune was to pipe industrial waste hot water into the Azolla fields in order to raise the temperature.

At the Tumen People's Commune in Sichuan, Azolla is preserved in the open fields, but in selected spots exposed to sunshine and shielded from wind. For the purpose it is grown in exceptionally thick, dense layers and is fertilized with phosphorus and potassium to encourage growth. Five percent of the total paddy area is used and, again, it was emphasized that during this period the plant must not be physically disturbed. The average winter temperature is 300 K (7 °C) but can reach 271 K (-2 °C).

1.3 Agricultural Use of Azolla

1.3.1 As green manure

The principal use of Azolla is as a green manure for rice. In some parts of China the plant is used also as a green manure for other crops; at the Pin Niu People's Commune, Changzhou for instance, Azolla was being composted and used to fertilize wheat

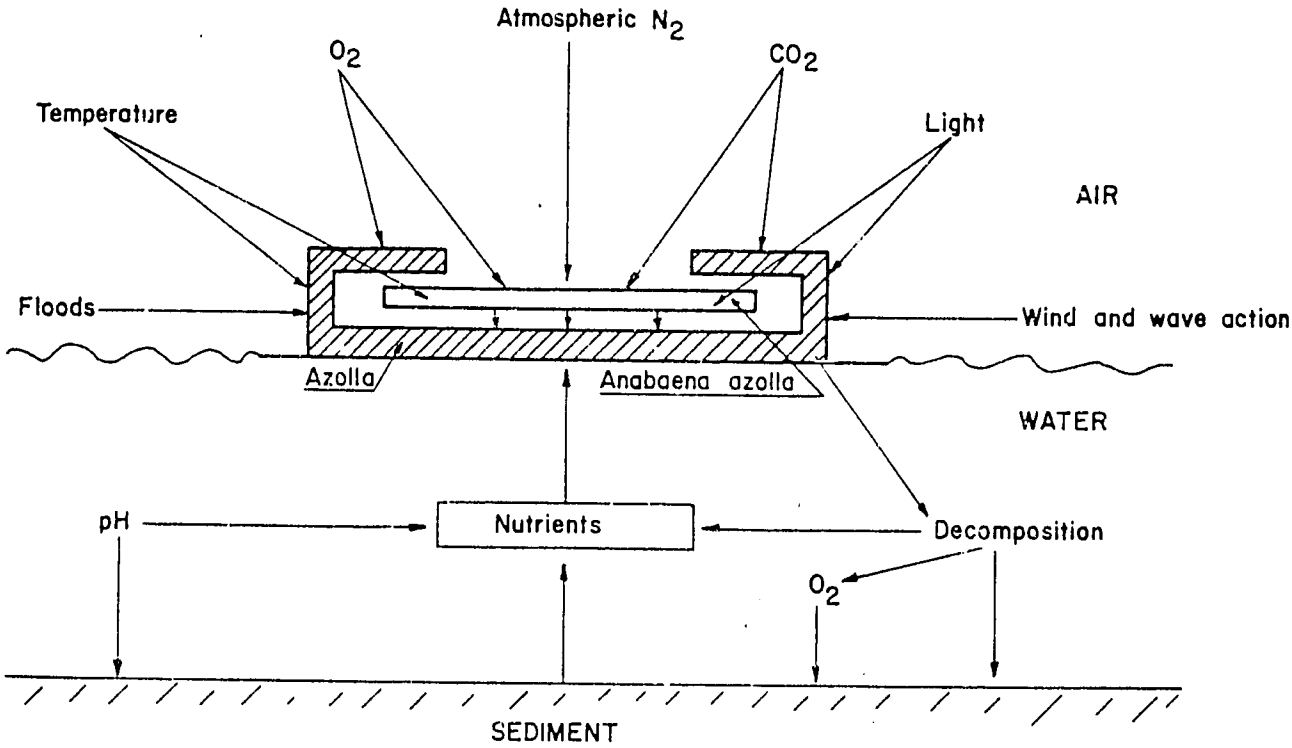

Figure 4. Diagramnatic representation of influence upon growth of Azolla of outside factors (after Ashton & Walmsey, 1976).

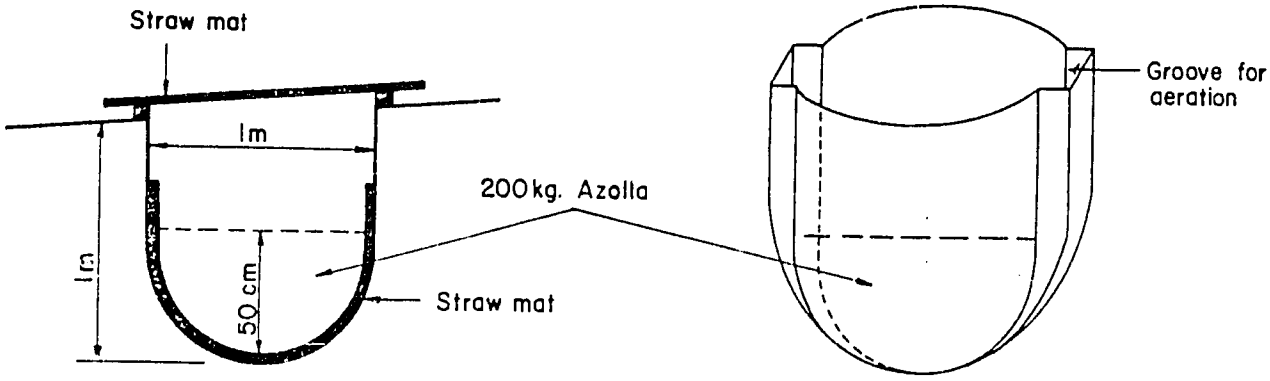

Figure 5. One method for keeping viable stocks of Azolla during cold winter months at Changzhou, Jiangsu Province (from FAO Soils Bulletin No.40, 1977).

126

and at the Tumen People's Commune in Sichuan Azolla is added at 30 000 kg/ha to wheat, maize and rape. Fertilizer trials have been made using Azolla in several provinces. Typical results of Azolla application are a yield increase of over 800 kg/ha for wheat, 710 kg/ha for broad beans and 945 kg/ha for maize.

In some Communes Azolla mixed with river silt is applied as fertilizer to upland crops.

The practices of using Azolla for rice fertilization vary between provinces and even between Communes. At the Anshi People' Commune Hangzhou, fields are flooded to a shallow depth, about 3-4 cm, and 'seeded' with Azolla at a rate of 7 500 kg/ha of fresh Azolla harvested from the nursery beds; the Azolla is thus 'seeded' into muddy water. When the field is covered with a mat of Azolla (about 20 ton/ha) and which usually takes about ten to fifteen days, the water is drained off and the Azolla ploughed into the soil. Rice is transplanted 2-3 days later. A second and third crop of Azolla may or may not be similarly grown and incorporated before rice is transplanted into the field.

The other technique for cultivation is to sow the plant in the field after transplanting rice seedlings. For example, at the Tumen People's Commune, Sichuan Azolla is added to and multiplied in, the fields after transplanting the first rice crop seedlings. Phosphorus and potassium fertilizers are added and fields are carefully weeded before adding the Azolla at 7 500 kg/ha (Plate 7). When the water surface is covered with Azolla (Plate 8) about 70% of the plant is dug in by hand, the remaining 30% being left to regenerate; no tools are used, the Azolla is buried in the mud with the hands (Plates 9 and 10) and this is usually done at about the end of May. After harvesting the first rice crop, the field is again flooded and in due course (about the end of June) the second crop of Azolla is dug or ploughed in before transplanting the second rice crop, and again about 30% is left to regenerate. A final digging in, this time completely, is done towards the end of July.

It was said that before the Commune started using Azolla paddy yields were only 3 000 to 3 600 kg/ha (500-600 jin/mu). In 1977 Azolla was used at the rate of 21 000 kg/ha (3 500 jin/mu) and paddy yields rose to 9 600 kg/ha (1 600 jin/mu).

After being incorporated into soil, Azolla decomposes within about two weeks; as green Azolla has a C/N ratio of about 10, it decomposes easily. According to one Commune (Anshi) 1 000 kg of Azolla is equivalent to 15 kg of ammonium sulphate and shows residual fertilizing effects. Experiments made at the International Rice Research Institute have shown that no nitrogen is available from Azolla until the plant has decomposed and that after a period of two weeks only 40% of the nitrogen is available to rice plants; it takes eight weeks to liberate 75% of the nitrogen and so residual effects are to be expected. In this connection the variety of rice is important and a variety having a long growing period will benefit most from Azolla applications.

When harvesting Azolla from the nursery beds it is first swept into piles by horizontally pushing a bamboo stick across the water surface; the plant is then gathered into baskets for transport (Plate 11). From 7-10 cm of standing water is necessary during harvesting in order to obtain a clean, mud-free crop of Azolla.

Experiments made at the Anshi People's Commune showed that incorporation of Azolla into the soil reduced the bulk density from 1.28 to 1.15 g cm^{-3}, increased pore space by 3.7% and increased humus content by 0.05%.

In provinces south of the Yangtze river the cultural pattern is wheat, rice, rice occupying 420 days including nursery propagations. Thus firstly wheat is grown and this is followed by the first rice crop planted at the end of May and harvested in August. The second rice crop is raised in the nursery during June, transplanted in August and harvested in September. This is often followed by a green manure crop. This intensive

Plate 7. Weeding a rice field by treading the weeds into the mud before seeding with Azolla (Tumen People's Commune, Sichuan Province).

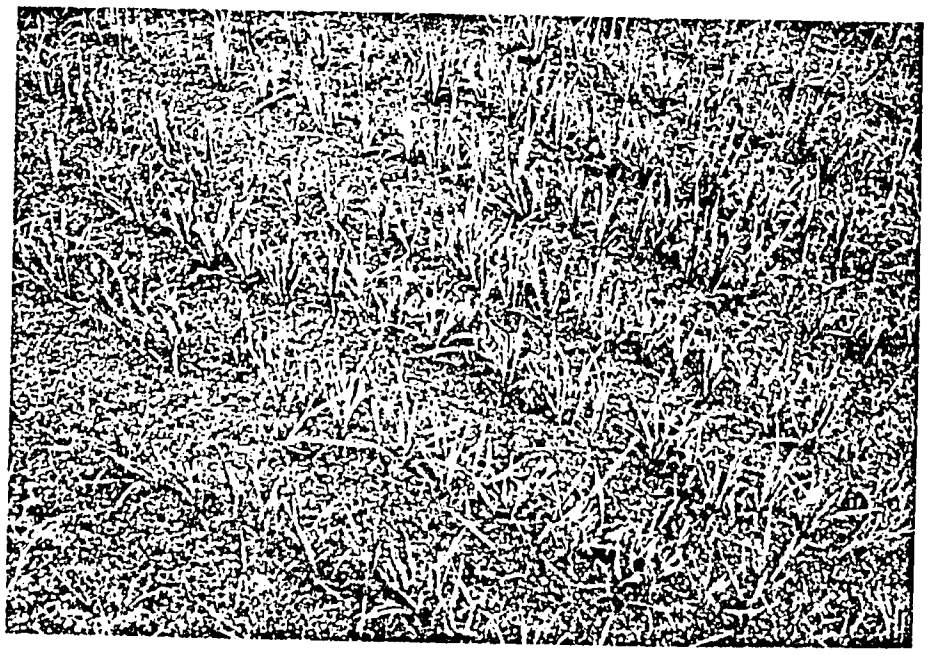

Plate 8. Water surface of rice field completely covered with Azolla pinnata just prior to burying the Azolla (Anshi People's Commune, Zhejiang Province).

Plate 9. Burying the Azolla by hand in the mud of a rice field at the Anshi People's Commune.

Plate 10. Detail of Plate 9, showing the burying procedure.

agriculture is made possible largely by the use of Azolla on a large scale.

1.3.2 As animal feed

Records going back to 540 B.C. indicate the use of Azolla as an animal feedstuff in China. In most communities Azolla is used to supplement animal (pigs, ducks and fish) feedstuff, usually after drying; it was said to contain 16% protein and 2% fat on a dry-weight basis. Azolla has been used up to 50% in the diet of pigs and one hectare of green Azolla will provide enough roughage for about two hundred pigs. At Pin Niu People's Commune in Jiangsu Province dried Azolla was mixed with sludge from biogas plants as an additive to pig feed (Plate 12).

1.4 Problems of Azolla propagation

The problems to be faced when growing Azolla can be summarized as:

i) breeding of varieties that can resist high and low temperatures;

ii) conservation of viable material during hot and cold months;

iii) pest and disease control;

iv) only one method of propagation, i.e. vegetative;

and v) transport of material.

The first two problems relating to temperature resistance and preservation of Azolla, have been discussed in section 1.2.3 and the best possible solution is to develop or adapt other species or strains of Azolla for the temperature ranges concerned; research on this is under way.

Damage, or even total destruction, of Azolla by pests is a very serious problem particularly during the summer months. The principal insect pests of Azolla are the larvae of Lepidopterous and Dipterous species, Pyralis, Micropsecta, Nymphila and Chiraonoma, which eat Azolla leaves during May-August. These pests are controlled by using a 2% emulsion of DDT or with 20% 'Phosnent'. During the periods April-May and August-October, larvae feed on Azolla roots and are combated with a 1:800 mixture of 50% 'Fenthion' and water or by spraying with 'Parathion'* or 'Toxaphene'. Snails are another pest, attaching themselves to the roots and young leaves; they are controlled with the same insecticides as for larvae.

Some common pests of Azolla are shown in Plates 13 - 16.

At the Tumen People's Commune in Sichuan, it is the practice to use ducks for destroying harmful insects and snails in Azolla beds (Plate 17).

During periods of high temperature Azolla is attacked by the fungus Rymanae; control is attempted by spraying with diluted 'Defusit' or 'Dipterex' mixed with 'Malathion'.

The fourth problem, of vegetative propagation, is not being examined yet in China but at the International Rice Research Institute work has been commenced on the sporophytic cycle and, if successful, will enable Azolla to be propagated by spores as well as enabling research to go ahead on the breeding of new strains and species having desired characteristics.

* Note that use of Parathion is restricted in many countries and use of DDT is restricted in some countries.

Plate 11. Harvesting Azolla in baskets from nursery beds at Pin Niu People's Commune, Jiangsu Province.

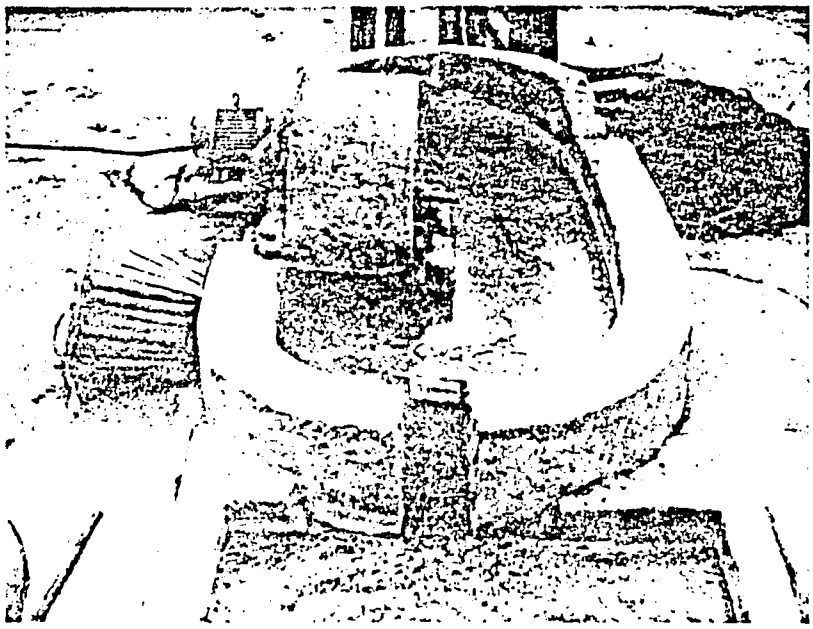

Plate 12. Azolla being mechanically mixed with sludge from a biogas unit to provide a pig feed additive (Pin Niu People's Commune, Jiangsu Province.

WEEVIL

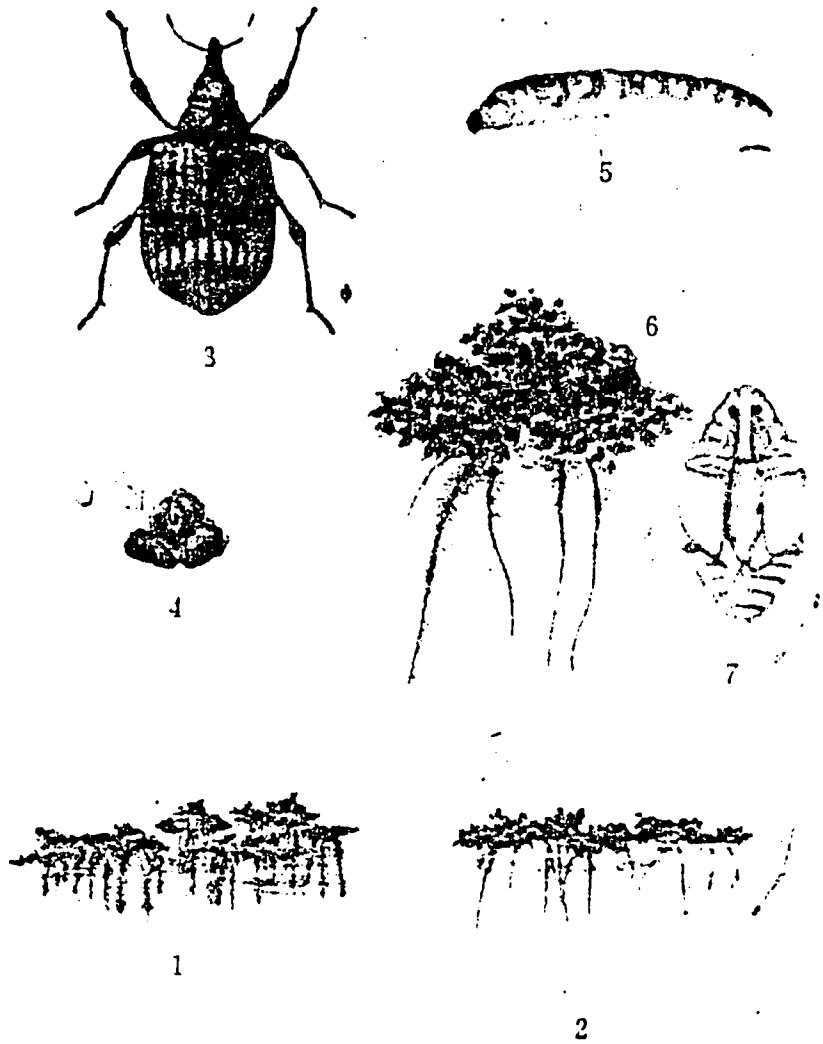

Plate 13. Pests of Azolla (Weevil): 1. Unaffected Azolla; 2. attacked Azolla; 3. moth and actual size; 4. egg deposit and single egg; 5. larva and actual size; 6. cocoon; 7. pupa and actual size.

MOTH

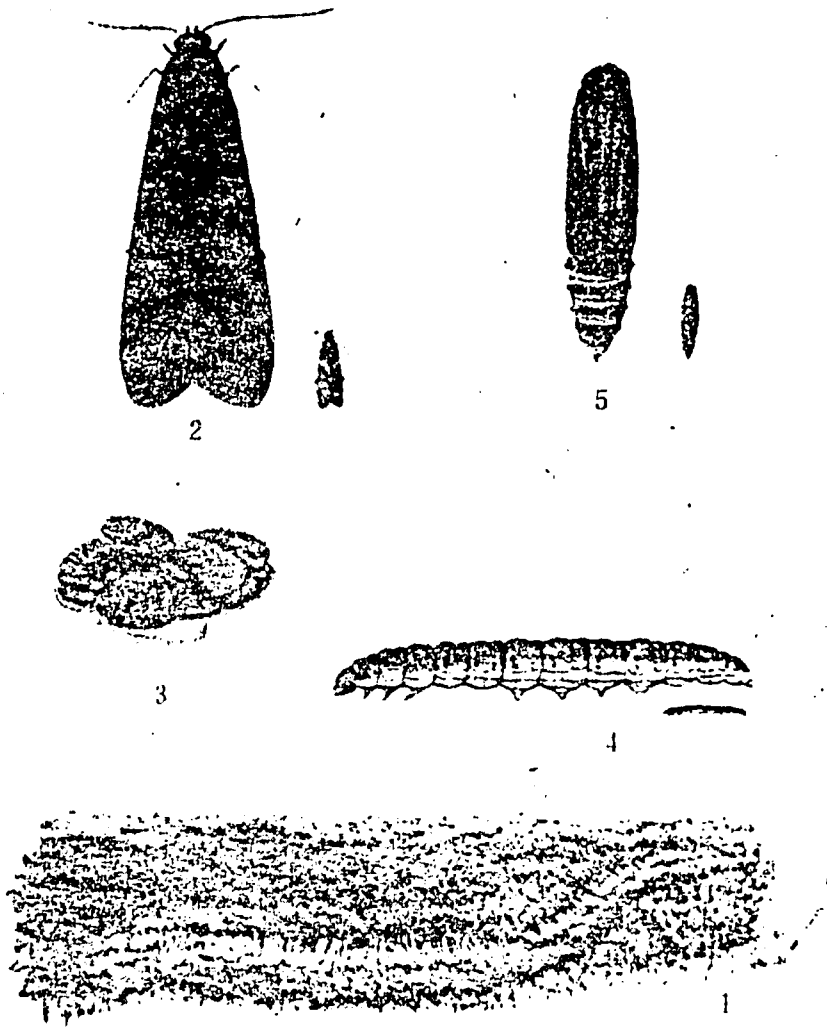

Plate 14. Pests of Azolla (Moth): 1. Tunnel dug by moth in Azolla; 2. moth and actual size; 3. eggs on Azolla; 4. larva and actual size; 5. pupa and actual size.

CHIRONOMID

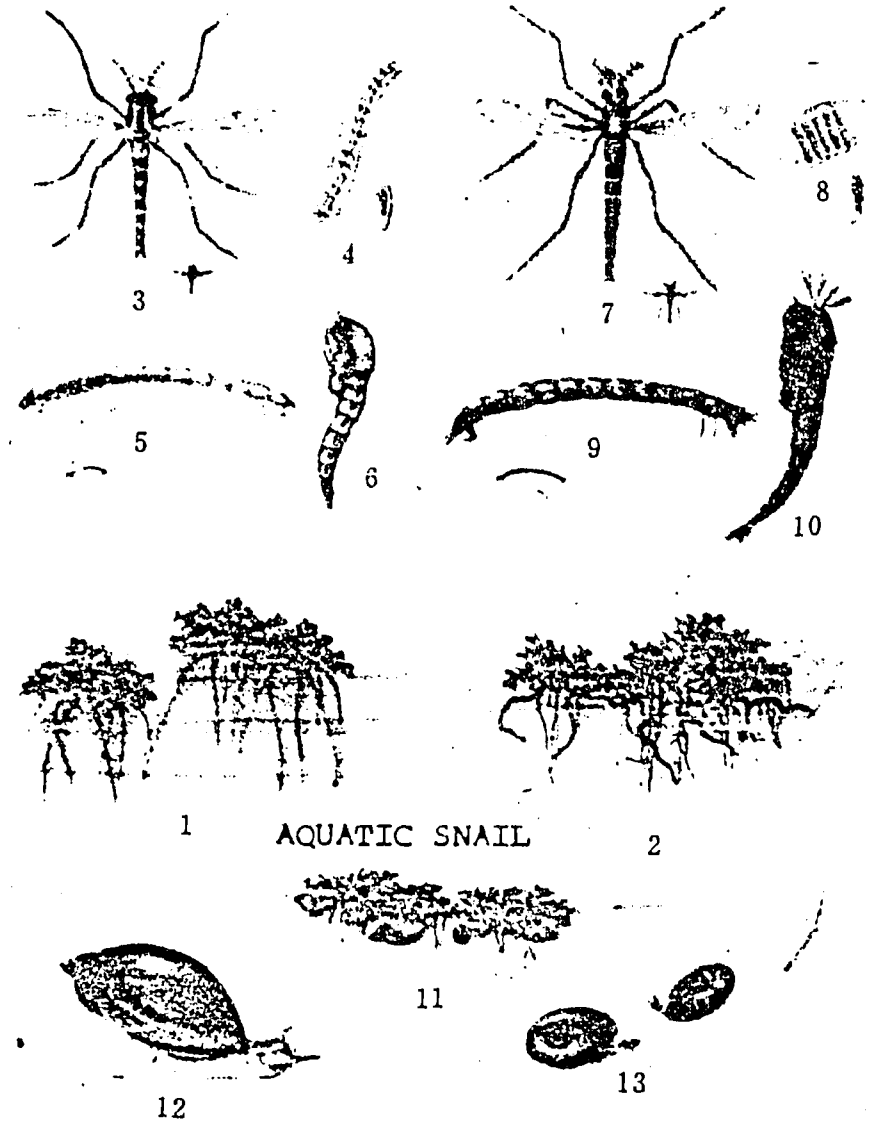

Plate 15. Pests of Azolla (Chironomid): 1. Unaffected Azolla; 2. attacked Azolla; 3. moth (white silk worm) and actual size; 4. egg mass and egg; 5. larva and actual size; 6. pupa; 7. moth (red silk worm) and actual size; 8. egg mass and egg; 9. larva and actual size; 10. pupa; 11. Azolla attacked by aquatic snail; 12 and 13 aquatic snails.

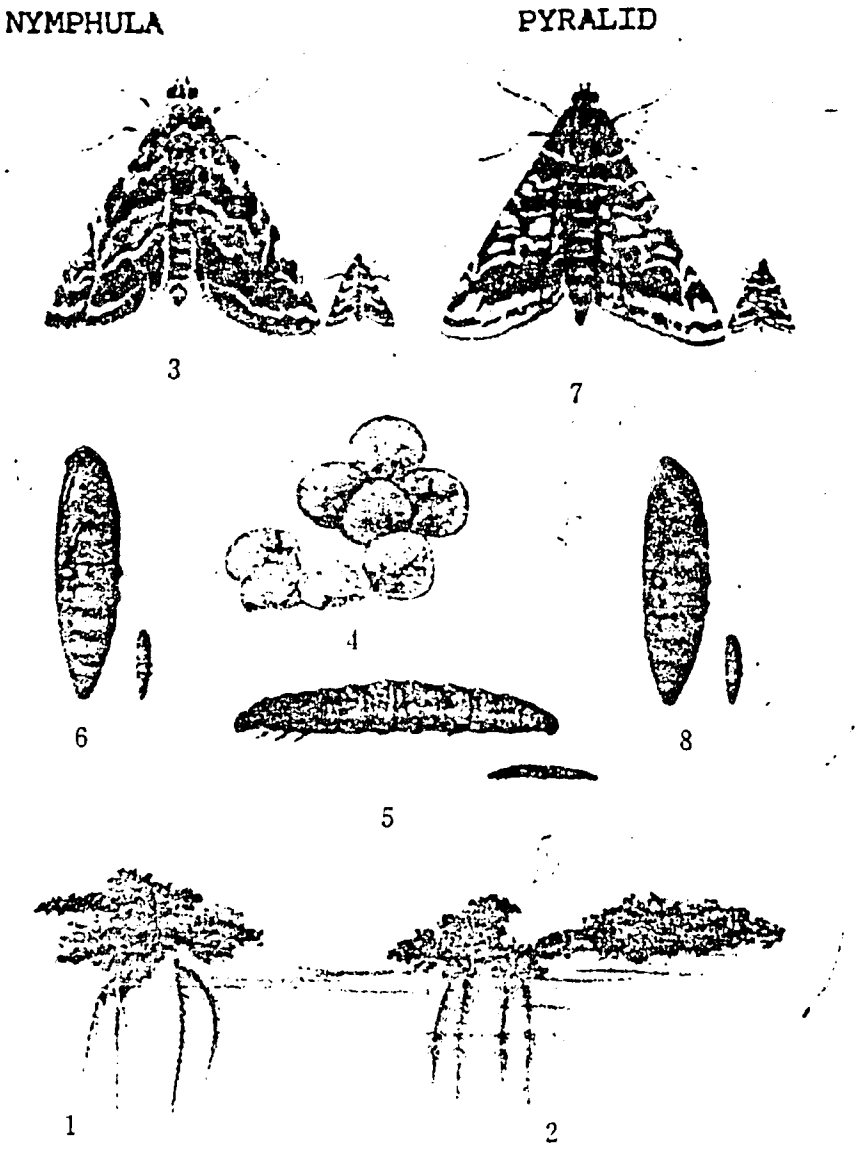

Plate 16. Pests of Azolla (Nymphula and Pyralid): 1. Azolla affected by young larva; 2. Azolla affected by adult larva; 3. moth and actual size; 4. eggs on surface of Azolla; 5. larva and actual size; 6. pupa and actual size; 7. Pyralid moth and actual size; 8. Pyralid pupa and actual size.

135

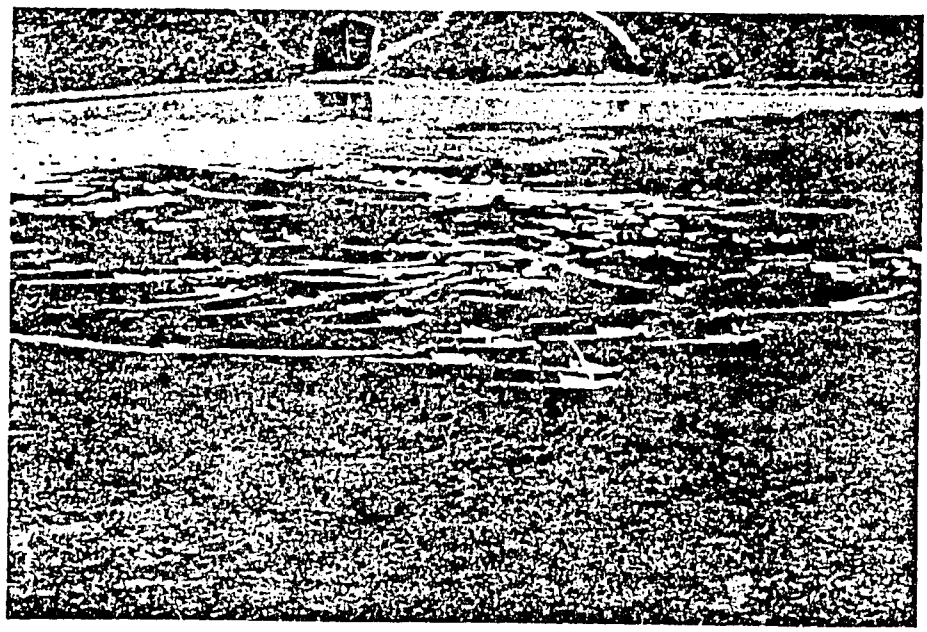

Plate 17: Ducks eating snails and harmful insects on a bed of Azolla at the Tumen People's Commune, Sichuan Province.

The fifth problem, that of transport, is not of much consequence in China today, but if more suitable kinds of Azolla are found elsewhere in the world, they would have to be transported - even if only for experimental purposes. Once Azolla can be propagated through spores, the transport problem will be solved automatically but meanwhile, the Chinese were interested to learn of a temporary technique developed at the International Rice Research Institute. In order to obtain and send Azolla specimens from various countries for experimentation purposes, a small quantity is 'seeded' onto agar-jelly in a test-tube; the plant can be kept alive in this manner for over one week.

APPENDIX 8 14-DB-1 Pul

ICLARM CONFERENCE PROCEEDINGS 4

010739

Integrated Agriculture-Aquaculture Farming Systems

MAY 8 1981

Edited by
Roger S. V. Pullin and Ziad H. Shehadeh

ICLARM INTERNATIONAL CENTER FOR LIVING AQUATIC RESOURCES MANAGEMENT

SOUTHEAST ASIAN REGIONAL CENTER FOR GRADUATE STUDY AND RESEARCH IN AGRICULTURE

131

Contents

PREFACE v

REVIEWS AND BACKGROUND PAPERS: AQUACULTURE IN RICE FIELDS AND IRRIGATION SYSTEMS

Review of Rice-Fish Culture in Southeast Asia. KHOO KHAY HUAT AND E. S. P. TAN 1

Rice Agronomy in Relation to Rice-Fish Culture. V. P. SINGH, A. C. EARLY AND T. H. WICKHAM 15

Aquaculture in Irrigation Systems. V. R. PANTULU 35

Pesticides as a Major Constraint to Integrated Agriculture-Aquaculture Farming Systems. SANTOSA KOESOEMADINATA 45

Carbofuran in Rice-Fish Culture. R. A. ESTORES, F. M. LAIGO AND C. I. ADORDIONISIO 53

REVIEWS AND BACKGROUND PAPERS: ANIMAL-FISH FARMING

A Review of Integrated Livestock-Fowl-Fish Farming Systems. M. N. DELMENDO . . . 59

Fish Farming in Manure-Loaded Ponds. G. L. SCHROEDER 73

A Theoretical Comparison of Waste Treatment Processing Ponds and Fish Product Ponds Receiving Animal Wastes. C. E. NASH AND C. M. BROWN 87

REVIEWS AND BACKGROUND PAPERS: SPECIAL CONSIDERATIONS

Food Potential of Aquatic Macrophytes. P. EDWARDS 99

Health Constraints to Integrated Animal-Fish Farming in the Philippines. C. C. VELASQUEZ 103

COUNTRY REPORTS AND CASE STUDIES

Integrated Animal-Fish Husbandry Systems in Hong Kong, with Case Studies on Duck-Fish and Goose-Fish Systems. A. WAI-CHING SIN 113

138

Utilization of Piggery Wastes in Fish Ponds. E. WOYNAROVICH 125

Raising Ducks on Fish Ponds. E. WOYNAROVICH 129

Integrated Livestock-Fish Farming in India. V. G. JHINGRAN AND B. K. SHARMA. . 135

Freshwater Aquaculture in Indonesia, with Special Reference to Small-Scale Agriculture-Aquaculture Integrated Farming Systems in West Java. ROESTAMI DJAJADIREDJA, ZULKIFLI JANGKARU AND MOCHAMAD JUNUS 143

Carp Culture in Japanese Rice Fields. KATSUZO KURONUMA (edited and condensed by R. S. V. Pullin) 167

The Integration of Fish-Farming with Agriculture in Malaysia. E. S. P. TAN AND KHOO KHAY HUAT. 175

Integrated Farming Systems: A Case Study under the Federal Land Development Scheme. NASARUDDIN ARSHAD AND MOHD. SHEFFIE ABU BAKAR 189

A Case Study on the Economics of Integrated Farming Systems: Agriculture, Aquaculture and Animal Husbandry in Nepal. K. G. RAJBANSHI 195

Integrated Agriculture-Aquaculture Farming Systems in the Philippines, with Two Case Studies on Simultaneous and Rotational Rice-Fish Culture. C. R. DELA CRUZ 209

Preliminary Results of Integrated Pig-Fish and Duck-Fish Production Tests. E. M. CRUZ AND Z. H. SHEHADEH 225

Integrated Agriculture-Aquaculture Studies in Taiwan. T. P. CHEN AND YENPIN LI 239

Integrated Agriculture-Aquaculture Farming Studies in Thailand, with a Case Study on Chicken-Fish Farming. KACHORNSAK WETCHARAGARUN. 243

RESEARCH AND INFORMATION REQUIREMENTS

Research and Information Requirements for Integrated Agriculture-Aquaculture Farming Systems. J. I. FURTADO 251

LIST OF AUTHORS AND PARTICIPANTS 257

Fish Farming in Manure-Loaded Ponds

GERALD L. SCHROEDER
Agricultural Research Organization
Fish and Aquaculture Research Station
Dor, Israel

Abstract

The principles of farming fish in manure-loaded ponds are discussed, including the autotrophic and heterotrophic food webs. The uses of manure as an aquatic fertilizer and as a component of supplemental feed are compared. Different animal manures are considered in relation to their quality for pond fertilization (C:N:P:K ratios, BOD, crude protein, fiber, etc.) and methods and rates of application are described. The recommended manuring rate as dry organic matter is 2 to 4% of the fish biomass/d. Fish yields in manure-loaded ponds are compared from Israeli and other data. Maximum fish yields of 30 kg/ha/d, averaged over a growing season, have been demonstrated, and a standing fish biomass of about 7 t/ha is attainable.

Introduction

A simple material balance shows that with the exception of ruminant husbandry, all semi-intensive or intensive animal rearing consumes, rather than produces, energy and protein-rich foods that might otherwise be used directly for human consumption. This is because all animals, with the exception of those having a rumen, must have their entire protein and energy requirements presented in easily assimilable form. Only the ruminant, through microbial activity within its rumen, can thrive on coarse fiber-rich foods. In many parts of the world this net loss of available food is unacceptable.

Yield Comparisons

THE CONVENTIONALLY FED FISH POND

Conventional fish culture is no exception to this pattern. If grains are used as a supplemental feed and annual yields of 5 to 10 t fish/ha are sought, then the feed conversion ratio (FCR) will be about three, i.e., 3 kg feed (dry weight) are required to produce 1 kg (wet weight) of fish. If fish meal-enriched feed pellets containing a total of 25% protein are used, the FCR will be about 2.0 to 2.5. Assuming that fish contain about 20% dry matter, then with an FCR (dry weight food: wet weight fish) of 2.5, 12.5 kg feed will be required to produce 1 kg of fish dry weight. If the feed pellets contain 10% fish meal (a typical level), then 1.25 kg of fish meal will be required to produce 1 kg of fish dry weight. This fishpond consumes not only grain but also fish.

This balance is discouraging from the viewpoint of alleviating food scarcity and from economic considerations. The cost of supplemental feed is consistently the largest single operating cost in conventional, semi-intensive fish culture, usually comprising 50% of the total operating costs.

THE MANURE-LOADED FISH POND

There is an alternative method for achieving the costly but relatively high yields attained in conventional,

140

semi-intensive fish culture. This is to use the pond, not only as the medium in which the fish grow, but also as the environment in which their food is grown. For centuries, fish culturists, especially in the Far East, have added animal manure to family fishponds. With pond management based on the experience of past generations, the average yield of manured ponds in China is estimated by the Food and Agriculture Organization of the United Nations (FAO) at about 3 t/ha/yr. While this is below the yields produced in semi-intensive culture (5 to 10 t/ha/yr), it does point to an approach for solving the net loss of food encountered in conventional fish culture.

The characteristics of a pond make it an excellent environment for converting crude, inedible nutrient materials into high quality fish food. Nutrients and minerals originally bound in relatively indigestible form are released by intense microbial activity in the water column and at pond bottom, and provide substrates for photosynthetic (autotrophic) and microbial (heterotrophic) production of basic fish food.

A COMPARISON OF THE USE OF MANURE TO FERTILIZE WATER AND LAND

Fish yields in manure-loaded ponds, with no supplemental feeding, can reach 5 to 10 t/ha/yr, but this requires attention to pond design and management. The types of fish stocked and the stocking densities used must be appropriate to the rates of production of natural foods. Manuring must also be adjusted to fish densities and pond conditions.

In farms raising land animals and field crops, the feeds supplied to the non-ruminants are used once as feed and then the animal manure is returned to the field. Introducing fishponds to such farms allows better recycling of the animal feeds as the manure nutrients are used by microbial growth in the pond and the fish crop the food organisms produced. This is especially true for poultry farms. The high biochemical oxygen demand (BOD) of poultry manure, as compared with ruminant manure, reflects the higher food value both of the feed eaten and the manure produced. A high BOD implies rapid digestion and conversion to microorganisms upon introduction to the pond.

The water from manured ponds is also useful for irrigation. The mineral component of the manure increases the plankton production. Standing crops of plankton in well-managed ponds will provide several ppm of dry organic matter equivalent in carbon (C): nitrogen (N): phosphorous (P) ratio to a good fertilizer.

The use of manure as a substrate for growth in fishponds is not without its cost to the farm. Extensive field experiments in China (FAO 1977) have demonstrated the benefits of using compost and manures for soil fertilization. Their nutrients and organic matter increase the water-holding capacity of soil, decrease the rate of evaporation and increase enzymic activity, all of which increase fertility and crop yield. Twenty to 40 t of compost-manure/ha (assume about 5 t/ha dry matter) applied during the growing season produces about a 1-t/ha increase in yields of rice, maize, wheat and millet over nonmanured yields of about 3 t/ha/season. This same amount of manure, when applied to fishponds receiving no supplemental feeding at the Fish and Aquaculture Research Station in Dor, Israel produced 1.0 to 1.5 t of fish, with an average daily yield of 30 kg/ha, and 3 to 4 t of fish, with an average daily yield of 20 kg fish/ha. (Schroeder and Hepher 1976; Moav et al. 1977; Schroeder 1978). To attain 20 kg fish/ha/d, a lower fish stocking density and lower manuring rate was used than was used to attain 30 kg fish/ha/d. The utilization of the manure was more efficient at the lower rate. Hence the given amount of manure could be used over a larger pond area producing a higher total fish yield although a lower yield per unit area of pond.

The relative value of using manure for land or fish crops must therefore be decided by the farmer when his supply of manure is limited. On a dry weight basis, the available energy of wheat (3,000 kcal/kg) is similar to that of fish meal (2,600 kcal/kg) (Shiloh and Viola 1973) but the dry weight yield of wheat due to manuring is considerably greater than the dry weight yield of fish. Hence, for energy source production, the manure is better used for producing grain. The protein value of fish, however, considerably exceeds that of grain and it is often protein that is limited in subsistence farming, in which case the manure would be better used for fish production.

The Food Web

Supplies of manure are limited and their use as a nutrient source in aquaculture incurs costs of collection and application, as well as the loss of availability for land fertilization. Understanding the paths that lead from manure application to fish production is of benefit in optimizing use of the organic and mineral components of the manure. A knowledge of the relative intensity of production of the various niches within the natural food web could enable us to tailor fish stocking densities to a polyculture that would harvest the natural foods according to their production.

The present understanding of the dynamics of the food web is incomplete. Few, if any studies have started with manure application and followed its components through to fish production in the way that nutrient pathways have been followed in ruminants (IAEA 1975).

Manure may enter the food web in several ways. as a food consumed directly by the fish, as a source of minerals used in photosynthetic production of phytoplankton (and hence as one of the first links in a food chain), and as a source of organic substrates and minerals for heterotrophic microorganisms, which in turn may be consumed either directly by the fish or by zooplankton.

MANURE AS A DIRECT FEED

The effectiveness of cow, chicken and pig manure as a direct fish feed has been tested in a variety of fish: common carp (Shiloh and Viola 1973; Campos and Sampaio 1976; Kerns and Roelofs 1977), tilapias, (Stickney and Simmons 1977), channel catfish, (Fowler and Lock 1974; Lu and Kevern 1975) and goldfish (Lu and Kevern 1975). The usual approach in these experiments was to incorporate the dried manure into a standard feed pellet as a replacement for higher quality components. In this manner, the first exposure of the fish to the manure was by direct consumption of the pellet. Experiments conducted in tanks or cages (the fish not having access to either the decay products of the uneaten pellets or to fish feces) showed that manures are poor substitutes for the components normally included in fish feed pellets. Consistently, with each increase in manure concentration in the pellet, there was a decrease in fish growth rates. Experiments conducted in open ponds, however, (the fish having access to the feed pellet decay products) gave results such that feeds containing as high as a 30% manure produced fish growth equal to the growth obtained with conventional fish feed pellets.

These results are explicable if we consider pond food chains. Feeding trials in which fish are isolated from the decay products of their feces or uneaten pellets allow only that fraction of the pellet directly digestible by the fish to be utilized. Metabolizable energy in cow and chicken manure is reported to range from 600 to 800 and from 900 to 1,200 kcal/kg, respectively, as compared to 3,000 kcal/kg for conventional feed pellets (Shiloh and Viola 1973) and 3,000 to 4,000 kcal/kg for zooplankton (Yurkowski and Tabachnek 1979). Ash comprises 20% to 40% of the dry weight of manure (Shiloh and Viola 1973; Bellamy 1975). Usually more than half of the crude protein content (determined as Kjeldahl N on the dried sample x 6.25) is not actually protein, but rather uric acid or other non-protein nitrogen (NPN) compounds that are not normally assimilable by the fish. Clearly, from the aspects of available energy and protein, cow and chicken manure are inferior foods.

In feeding trials conducted in open ponds, however, the fish can utilize the directly assimilable fractions of the pellet plus those organisms which grow on the undigested part of the pellet after it has fallen to the pond bottom, either as uneaten pellets or as fish feces. In this sense the pond fish combination becomes an aerobic version of a rumen and its owner. Within the rumen, sources of crude fiber and NPN are incorporated into microbial production which in turn serves as effective food for the animal (Abdo et al. 1964; Hobson 1976). A similar succession appears to occur in the pond. The fish crops the food web that originates with the decaying pellets or feces, and can apparently satisfy its nutritional requirements and maintain a high growth rate.

NATURAL FOODS AND FISH GROWTH

Twenty-six commercial Israeli fishponds stocked with common carp *(Cyprinus carpio), Sarotherodon aureus* and mullet were studied to determine factors affecting the FCR (Schroeder 1973). Supplemental feeds (sorghum and/or fish meal-enriched pellets) were supplied daily at 3 to 4% of the fish biomass. In spite of the high supplemental feeding rate, the most important factor affecting the FCR was the abundance of natural foods. Interestingly, the main correlation between FCR and natural foods was for heterotrophs and not for autotrophs. The reason for this should become clearer below.

MANURE AS A FERTILIZER FOR AUTOTROPHIC (PHOTOSYNTHETIC) PRODUCTION

Upon addition of manure to a fishpond, several concurrent biological activities are started which produce the natural food web. The average mineral composition of several manures is listed in Table 1. This mineral fraction is directly available for photosynthesis or heterotrophic growth of bacteria. Bacteria, digesting dead plankton or the organic fraction of manure, liberate bound minerals and produce carbon dioxide, both of which become available for further photosynthetic production (Kajak and Hillbricht-Ilkowska 1972; Andersen and Macfayden 1976).

In the presence of adequate nutrients, primary production reaches a maximum value set by the amount of solar energy penetrating the pond water. In tropical and subtropical climates, this is about 10 g Carbon (C)/m^2/d (Tamiya 1957; Anon. 1977), and is observed in algae production ponds. Schroeder (1978) measured primary production in fishponds receiving inorganic fertilizers at rates of 70 kg superphosphate and 70 kg ammonium sulfate/ha/2 wk and ponds receiving 100 kg chicken or cow manure dry matter/ha/d. Primary production was the same in the manured ponds as in those which received the inorganic fertilizers alone. Had

the primary production been limited by carbon, minerals or soluble nutrients, the added manure would most likely have produced an increase over the inorganic fertilizers. The limit in these tests apparently was due, however, to the available solar energy penetrating the pond. The range of primary production levels, observed in Israeli fishponds (subtropical climate) by Hepher (1962), Schroeder (1978) and Noriega (in press), was 1 to 5 g $C/m^2/d$ in the spring and fall, and 4 to 8 g $C/m^2/d$ in the summer. These values are below the maximum value of 10 g $C/m^2/d$ observed in algae production ponds in the same region. The fishponds studied had 5,000 to 10,000 fish/ha. There was considerable turbidity due to bottom sediments being mixed into the water column by the fish. This reduced light penetration and hence photosynthesis.

Of the total primary production, 90% is in the nannoplankton size range, i.e., passing through a 30 to 40 μm net (Hillbricht-Ilkowska et al. 1972; Schroeder 1978). This is available as a natural food for fish only after entering further food chains or conglomeration to increase its effective size.

When trout are fed a nutritionally balanced diet, the carbon conversion ratio, is five, i.e., 5 units of feed carbon consumed produce 1 unit of carbon fixed in fish growth (Schroeder 1978). Assuming that this ratio is broadly applicable to other fish species and that natural foods provide a balanced diet, we can predict the fish yield attainable by direct harvesting of plankton larger than 30 to 40 μm.

In manured fishponds with no supplemental feeding, during a period when fish yield was 30 kg/ha/d, primary production ranged from 2 to 5 with an average of 4 g $C/m^2/d$ (Schroeder 1978). Only if the entire primary production was cropped and utilized by the fish could the observed fish yield be accounted for, assuming a carbon conversion ratio of five. Observations on sedimentation ponds showed that plankton sedimentation to the sediments (based on accumulation rates of protein accompanied by microscopic analysis) was at a rate similar to that of the primary production. This is consistent with the observation that 90% of the primary production was nannoplankton and, therefore, only a small fraction was harvested directly by the fish. Hence, only a small fraction of the fish yield could be accounted for by direct harvesting of autotrophic-photosynthetic production. Noriega (in press) also found no correlation between primary production (range 1.3 to 3.5 g $C/m^2/d$) and fish yields (about 20 kg/ha/d) in manured ponds with no supplemental feeding. Attempts to predict fish yields from measured primary production gave values less than 25% of the observed fish yields.

Work in progress (Edwards & Sinchumpasak, pers. comm.) shows that the gut contents of *Sarotherodon niloticus* fed on the effluent from a high rate oxidation pond, contain large quantities of the algae *Scenedesmus sp.*, *Micractinium sp.* and *Microcystis sp.* These algae generally are classified as nannoplankton. Small amounts of detritus were also observed.

Clearly, however, food chains additional to autotrophic production must be involved in fish production in manure-loaded ponds.

MANURE IN THE HETEROTROPHIC FOOD WEB

Tang (1970), working in Taiwan with a 6-ha pond receiving frequent additions of night soil, made detailed analyses of the natural food organisms present (phytoplankton, zooplankton, benthic insects, worms and larvae) in relation to the traditionally accepted feeding habits of the fish species used and their growth. From the amounts of these foods present, he could account for only half of the total 30 kg/ha/d measured fish yield. He attributed the remainder to direct consumption of the night soil by the fish. Other researchers (Odum 1968, 1970; Mann 1972; Terrell and Fox 1974; Marias and Erasmus 1977; Buck et al. 1978), when presented with observed fish yields in excess of the generally accepted natural foods available, found that heterotrophic production of bacteria and protozoa could account for the discrepancy.

This microbial community flourishes on manure added to the pond, using the organic and mineral fractions as sources of energy and nutrients. These microorganisms are eaten by pelagic as well as bottom feeding fish (Odum 1970; Kuznetsov 1977), and are good food for fresh and saltwater fish (Tacon and Ferns 1976; Beck et al. 1979; Bergstrom 1979; Matty and Smith 1978; Atack et al. 1979). Kuznetsov (1977) further observed that more than half the bacteria present in the waters tested were in the form of flocs of 21 to 60 μm: a size range available to many pelagic feeding fish.

Spataru (1976, 1977), by analyses of gut contents, has shown that bottom feeding tilapias and the pelagic filter feeding silver carp *(Hypophthalmichthys molitrix)* consume detritus as well as plankton in significant quantities. Summerfelt et al. (1970) found detritus to be the major component of the gut contents of common carp feeding in five Oklahoma reservoirs. Several authors (Fish 1955; Newell 1970; Hargrave 1976) conclude that the microbial community in detritus provides essentially all the nutritional requirements of fish feeding on it. The detritus substrate itself passes through the fish gut relatively unaffected and when voided as fish feces, it is recolonized by microorganisms and can be eaten again by the fish.

The data presented in Table 1 indicate that manure is a good substrate for microbial growth. Unpublished

research at Louisiana State University has shown that good microbial production in crawfish-rice paddies, and hence a good crawfish yield, requires a C:N of about 17:1. This is quite similar to the C:N of many manures. Usually the C:N:P of a bacterial growth medium is about 20:1:0.2.

Aerobic digestion of organic matter by bacteria fixes 20 to 50% of the available C as bacteria cells. The remainder is used for metabolic energy (Doetsch and Cook 1973). Anaerobic digestion is less efficient. Measured cellulose digestion rates, demonstrating heterotrophic microbial production in manure-loaded fishponds, are consistently highest at the pond bottom-water interface (Schroeder 1978). The rate here is 2 to 10 times greater than in the water column. Within the bottom sediments, anaerobic after 1 to 3 mm of depth, there is only slight digestion.

Microscopic examination of detritus also shows a consistent pattern: a coarse matrix of organic matter surrounded by dense populations of protozoa (often ciliates) actively grazing on what appears to be a bacterial layer coating or focused on the matrix (Plate 1).

The detritus or seston (i.e., all organic and inorganic suspended solids) provided by the added manure appears to supply a base for colonization by microorganisms essential to the food web. Total production of all organisms larger than 37 μm, both autotrophic and heterotrophic, in pond water and on the pond bottom, in manure-loaded ponds with no supplemental feeding, can account for less than half the 20 to 30 kg fish yield/ha/d consistently observed (Schroeder 1978). The evidence points to microbial production being the key to the high yields.

TROPHIC NICHES WITHIN THE FOOD WEB

The food web is complex and dynamic. Under conditions of low fish density, the concept of specific trophic niches for different fish type is probably valid. In such cases, the growth rates of each fish type remain high. At high densities, however, the demand for food in a given niche may exceed its supply. This will force the fish to exploit additional trophic niches. Generally, competition will force the fish to feed at lower trophic levels where the production will be higher (May 1976). The growth rate of fish, such as common carp, which are highly specific in their feeding will suffer more than that of detritus feeders, accustomed to a lower trophic level.

The dynamic nature of the food web was demonstrated by Yashouv (1971), who showed a strong feeding interaction between common carp and silver carp. Polyculture gave higher yields of each species than the sum of separate monocultures. The common carp stirred benthic material (detritus) into the water column, making it available for the silver carp. The feces of the silver carp, containing partly digested plankton and detritus, became available as a bottom manure. Each species therefore increased the growth potential of the other.

Table 1. Average composition (%) of several manures (figures in brackets are based on the present author's estimates of the organic matter in the manure as originally reported).

	Water	N	P	K	Organic matter	C:N:P
Dairy cows*	79	0.5	0.1	0.5	(17)	17:1:0.2
Fattening cattle*	78	0.7	0.2	0.5		
Sheep*	64	1.1	0.3	1.1		
Sheep**	–	0.7	0.3	0.3		
Pig*	74	0.5	0.2	0.4		
Pig**	–	0.6	0.2	0.4	15	13:1:0.3
Hen*	76	1.1	0.4	0.4	(19)	9:1:0.4
Poultry**	–	1.6	0.7	0.7		

*Morrison 1959
**FAO 1977

Ecological Characteristics

The manure-loaded fishpond can be considered as a system to which mineral-rich organic matter is added in the form of manure and removed in the form of harvested fish. In a properly managed pond there will be an ecological balance that avoids the extreme fluctuations so commonly observed in highly eutrophic water bodies.

The addition of manure to a pond provides a nutrient base for dense blooms of phytoplankton, particularly nannoplankton which in turn triggers intense zooplankton development. The zooplankton have an additional food source in the bacteria which thrive upon the organic fraction of the added manure. The zooplankton community therefore develops from two food chains, and its development soon exceeds the corresponding production of phytoplankton if it is left unexploited The zooplankton then overgraze the phytoplankton and photosynthetic oxygen production becomes inadequate to supply the respiration demands of the total pond community (bacteria, protozoa, zooplankton and phytoplankton). The pond becomes anaerobic; the zooplankton population dies, gradually decays and a new cycle of phytoplankton growth starts.

It has been clearly demonstrated, however, that ponds receving high loadings of manure or other nutrient rich organic matter, do not have these extreme cycles when stocked with a proper polyculture of fish (Schroeder 1975a; Allen and Carpenter 1977; Buck et al.

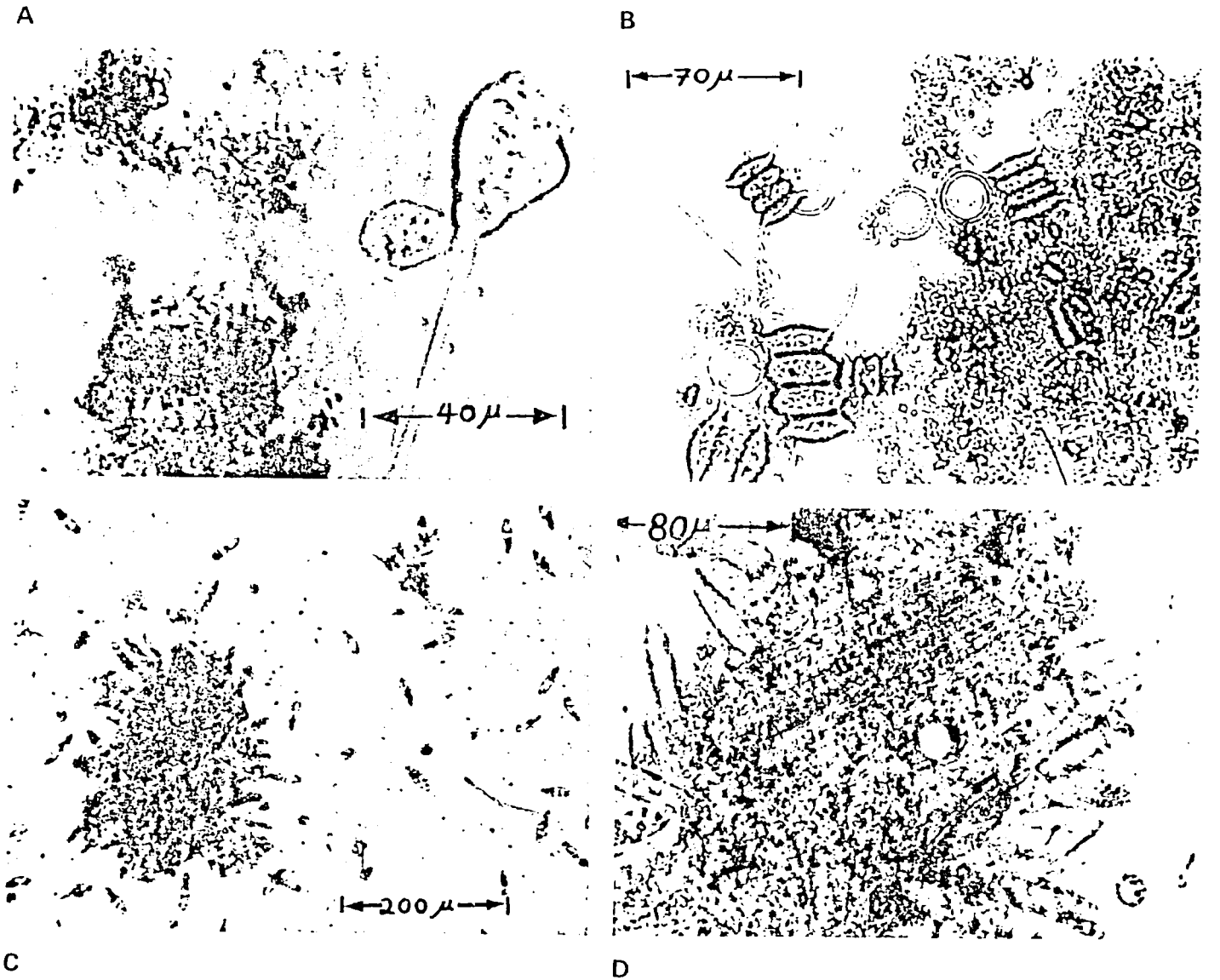

Figure 1. Microorganisms active among the detritus of a pond bottom.

145

1978). The fish grazing on the plankton community maintain the balance between plankton production and consumption. The pond remains aerobic with higher average levels of dissolved oxygen (DO), higher pH and lower standing crops of phytoplankton, zooplankton, benthic chironomid larvae, and pelagic bacteria (Tables 2 and 3). Table 2 shows that here the daily DO cycle, and especially the critical early morning DO, is not adversely affected by intense manuring. This is in accord with observations that the BOD of the added manure is not a main oxygen consumer in a properly manured pond (Schroeder 1975b).

Unpublished data and observations at Dor, Israel have shown that when the basic nutrients for microbial growth (cf. Rodina 1972) were added to aquaria, there is greater flocculation and precipitation of microorganisms (bacteria and protozoa) in the presence of fish than in their absence (A. Razin, pers. comm.). This may be one factor contributing to the lower bacteria concentrations observed in eutrophic ponds stocked with fish than in eutrophic ponds without fish.

Standard aerobic bacteria plate counts from 19 samples of water, comparing manured ponds without supplemental feeding with conventionally-fed non-manured ponds, showed the same bacterial concentration range: 1 to 5 x 10^4 colony-forming bacteria/ml. Thirty similar analyses of the surface sediments also showed the same bacterial concentration range in both types of pond: 2 to 35 x 10^6 colonies/ml. In the presence of adequate organic matter, whether originating from added manure or added feeds, there appears to be a maximum standing stock of bacteria.

Since the fish productivity in a manure-loaded pond is dependent on aquatic production of natural foods, it is essential that adequate chemicals are present. Very soft water (e.g., 10 mg/l total hardness and alkalinity, Almazan and Boyd 1978) will not support adequate production. At least 0.2 ppm P is required (Jhingran 1977). Extractable P in the soil of the pond may supply part of this. With either soft waters or acid bottoms, agricultural grade limestone (2 to 6 t/ha, $CaCO_3$) and inorganic fertilizer (50 kg/ha, 20 (N): 20 (P): 0 (K) are needed to increase total alkalinity, pH and general production (Thomaston and Zella 1961; Boyd and Scarsbrook 1974; Wiederholm and Eriksson 1977; Sreenevasan, undated).

In several representative commercial ponds in Israel, the water contained: Na, 300 to 800 ppm; Mg, 55 ppm; Ca, 70 ppm; K, 30 ppm; P, 0.3 to 0.6 ppm and Cl, 400 to 1400 ppm. These slightly brackish ponds are highly productive.

MANURING THE POND

It is essential in a fish farming system based on aquatic production of natural foods that the growth substrate, in our case manure, is adequate both in quality and quantity. There are few data in the literature which quantify these parameters in relation to attained high fish yields. The remarks in this section are based on observations by the author and his colleagues at the Fish and Aquaculture Research Station, Dor, Israel, during experiments in which fish yields in manured ponds with no supplemental feeding averaged 20 to 30 kg/ha/d over entire 100 to 125-d test periods (Schroeder 1974; Moav et al. 1977; Schroeder 1978; Wohlfarth 1978).

Table 2. Some characteristics of ponds with and without fish and manure-loading: a) Water temperature 9 to 15°C; no organic or chemical input was supplied to the ponds other than manure (adapted from Schroeder 1975a). b) Water temperature 25 to 30°C; July to September; 6 ponds; manured ponds received pellet feeds daily at about 3% of fish biomass; all ponds received 70 kg superphosphate and 70 kg ammonium sulfate/ha/2 wk (adapted from Schroeder 1978).

	No fish + manure	Fish + manure	Fish, no manure	No fish, no manure
a) DO at 9.00 AM (ppm)	0.7-9.5	9.0-15.9	10.0-13.8	–
pH	7.9-8.3	8.3-8.9	8.6-8.7	–
zooplankton retained on a 150 micron net (g dry wt./m^3)	0.3-42.4	0.1-1.0	<0.06	<0.06
phytoplankton retained on a 50 micron net (g dry wt./m^3)	0.2-4.3	0.3-1.4	<0.06-0.2	<0.06
chironomids (100's/m^2)	79-215	1-4	0-2	1-7
water column bacteria (1000's/ml)	17-37	1.6-6.7	0.7-4.3	–
b) average early morning DO (ppm)	–	4.9-5.4	3.3-5.0	–
average late afternoon DO (ppm)	–	14.7-15.9	12.0-15.3	–

Table 3. Some characteristics of ponds with and without fish receiving sewage (condensed from Allen and Carpenter 1977).

	Fish	No fish
5-d BOD (ppm)	6	21
Suspended solids (ppm)	12	37
Total nitrogen (as N)	3	10
Total phosphorous (as P)	2	8
pH	8.3	7.9

QUALITY CONTROL

The major problem affecting manure quality is the inclusion of foreign, non-essential materials. With cow manure from dairy herds, it is essential that a minimum of wash water and disinfectant chemicals enter the manure pit. It has not been uncommon to find that manure from a pit under a milking room contains 99% water and 1% solids. Fresh cow manure should contain not less than 10% dry matter, of which the maximum ash level should be 30%.

A similar contamination problem sometimes arises with chicken manure scraped from the pen floor. Its ash content, due to added soil, can exceed 55% of the total dry weight. Unless there are large pebbles or stones, the soil is virtually undetectable by casual observation. The ash content of poultry manure should not exceed 20%. Higher ash levels may also result from long-term storage during which microbial digestion causes consumption of nutrients and organic matter or leaching by rain water. Long-term storage of any type of manure is undesirable, but if unavoidable, it should be performed in a sheltered area, with minimum loss of the liquid content, since much of the nitrogen is in the urine.

The C:N:P:K ratios of the manures listed in Table 1 show that they are good substrates for autotrophic and heterotrophic growth. In all cases there is a slight deficiency of C relative to N for bacterial growth. Since part of the manure N will be used for phytoplankton production, without a corresponding use of C, there is in fact not an excess of N, except possibly in poultry manure.

Our unpublished analyses of cow manure show crude protein levels (Kjeldahl N x 6.25) of 10% to 15% of the dry weight. Of this, less than 1% was digestible by pepsin, Fish digestive systems rely on trypsin rather than pepsin, but the two types of enzymes should give similar results (S. Viola, pers. comm.). Hence, essentially all the manure nitrogen is in the form of non-digestible fractions (e.g., uric acid). Chicken manure has approximately a total of 25% crude protein and 10% pepsin-digestible protein, on a dry weight basis.

Lignin is 14% to 20% of the dry weight of cow manure. Crude fiber (not lignin) is about 30% to 40%, and total fiber (crude fiber, lignin and hemicellulose) about 60%. In chicken manure, lignin is about 10%, crude fiber 25% and total fiber 45%. The starch content and reducing sugar content of chicken and cow manure are both usually less than 1% of the dry weight.

During manure storage, fermentation occurs and produces a general increase in ash, lignin and hemicellulose, and a decrease in crude fiber. This is logical since, with fermentation, the most digestible fractions are consumed first.

The BOD of a manure is a useful measure of its potential biological activity and quality. A 24-hr BOD is often adequate to estimate these values. The chemical oxygen demand (COD) is less useful since it partly derives from highly indigestible fractions. The 24-hr BOD (at 20°C) of a good cow manure, containing 12% dry matter and most of the original urine, is about 2.5 g O_2/kg manure. A higher BOD, as is observed in chicken manure, is an indication of an even better substrate for the pond food web.

MANURE DISTRIBUTION OVER THE POND

Distribution of manure over as much as possible of the pond area is desirable. Although as much as 40% of the total solids of fresh cow manure can remain suspended in the water column, 50 to 60% of this suspendable matter is inorganic minerals. Approximately 90% of the coarse organic matter settles to the pond bottom within 1 to 2 hr (Lombrozo and Schroeder, in prep.). Accumulation of more than a few mm of this at any bottom location will result in anaerobic digestion, producing an interstitial pH of about 6.5 (characteristic of organic acid fermentation). Ammonia concentrations in the manure layer will reach 30 to 100 ppm, even though 5 cm above, in the overlying water column, the ammonia concentration may be less than 1 ppm. H_2S generation will also soon start. There will be a general reduction of microbial production in the area and the danger of sudden release of large amounts of toxic substances (NH_3, H_2S) from the bottom interstitial water into the water column. Only within the initial one or 2 mm of sediments will there be high microbial activity and production.

It is interesting to note that even in polyculture ponds containing 4,000 adult common carp/ha, there is not sufficient stirring of the settled bottom manure to mix the interstitial water with the overlying water and thus reduce this accumulation of ammonia.

Locating animals adjacent to or directly over the pond allows a continuous gradual supply of manure to

the water column and bottom. Since much of the organic matter settles rapidly, this gradual addition is valuable in that it allows the water column as well as the pond bottom to be active in microbial production.

RATE OF MANURE APPLICATION

Proper manuring rates are essential if maximum fish yields are to be attained. The rate is determined by several factors.

The temperature of the pond must be adequate for microbial digestion of the organic matter. In tropical and subtropical climates this is not usually a limiting factor during the growing season. There is adequate production of natural foods when the water temperature is above 18°C. At temperatures of 10 to 15°C, there is moderately rapid digestion of cellulose, but the fish studied at the Fish and Aquaculture Research Station, Dor, Israel—common carp, *Sarotherodon aureus* and silver carp—do not grow well at these temperatures.

Thirty measurements of pond bottom respiration in Israeli fishponds (Schroeder 1975b) plus similar measurements in European ponds and lakes (Edberg and Hosten 1973) and in fishponds in the southern part of the United States (Boyd et al. 1978), gave a maximum value of 3.5 g O_2/m^2 pond bottom area/24 hr. This indicates heterotrophic activity. That there seems to be a maximum value indicates that there is a maximum amount of organic matter that a pond can digest per unit area per unit time. Adding manure at a rate in excess of this amount results in accumulation of organic matter on the pond bottom with resulting undesirable anaerobic interstitial conditions. From our experience, this maximum amount is estimated to be 100 to 200 kg manure dry weight, or 70 to 140 kg organic matter/ha/d.

If the oxidation of organic matter is represented by

$$CH_2O + O_2 = CO_2 + H_2O$$

then on a weight (not molal) basis, for each gram of oxygen consumed, approximately 0.9 g organic matter are oxidized. The measured bottom respiration (3.5 gm $O_2/m^2/d$) would therefore represent consumption of about 32 kg organic matter/ha/d. If a similar amount of oxidation occur in the overlying water column (the total number of aerobic bacteria in 1 m of water column is approximately equal to the number of aerobic bacteria in the underlying pond bottom), then this oxidation rate is adequate to account for the aerobic digestion of 70 kg organic matter or 100 kg manure dry weight/ha/d. A similar amount would be fixed in microbial growth. There is also digestion, though less, by anaerobic bacteria.

We add cow manure organic matter to the pond at a daily rate of 3 to 4% of the standing fish biomass. Chicken manuring rates may be lower, 2.5 to 4.0%. Note that the calculation is based on organic matter, exclusive of the ash content. This corrects for contamination by soil or water. At this manuring rate, with a polyculture of 9,000 fish/ha, the fish yields are 20 to 30 kg/ha/d. It is interesting that supplemental feeding tables call for daily feeding rates of grains and pellets also at about 2 to 4% of the fish biomass, depending upon fish size and species.

It must be emphasized that if a pond is experiencing critically low early morning DO, no organic matter, whether supplemental feed or manure, should be added until the problem is rectified.

TYPES OF MANURE

The value of manure as a substrate for microbial growth is directly related to the feed the animal received. If the feed was of high quality, the manure will be an excellent substrate. If, however, the animal has consumed primarily crude fiber, its manure will be of lower value.

Feeding patterns vary with the availability of animal feeds. It is not practical, therefore, to characterize manures on an absolute scale. The relative values of specific manures can, however, be evaluated by measuring their BOD. Generally, the value of the manures, in increasing order is: cow and sheep manure, followed by a grouping of pig, chicken and duck.

In areas where feeds are plentiful, ducks receive a ration containing 18% protein (calorific value, 2.9 kcal/kg). They can be grown on ponds at 100 to 125/1,000 m^2. These ponds give fish yields of 30 to 40 kg/ha/d (I. Polovnick and H. Barash, pers. comm., Volcani Research Center, Bet Dagan, Israel). On natural foods alone, however, ducks are grown at about one-tenth of this density. The value of raising ducks that receive supplemental feeds over fishponds is that the unavoidable wastage of the food that they spill (about 10%) falls into the pond (Polovnick, pers. comm.) and is directly available to the fish. Ducks, being in a more natural habitat on the pond, remain healthier than those raised on land.

FISH YIELDS FROM MANURE-LOADED PONDS

Quality of Fish Grown with Manure

Having demonstrated that fish grow reasonably well in manured ponds, it is essential also to demonstrate that they are of adequate quality for human consumption. Sobol (pers. comm., Research Station, Dor, Israel) analyzed the fat content of approximately 100 carp

148

grown on manure, grains and on fish meal-enriched pellets. The fat concentrations were 6%, 20% and 15%, respectively. The taste quality of the manure-grown fish was considered superior.

Public health aspects must also be considered. Manure contains fecal bacteria and may also harbor parasites. These may be transmitted to man via the fish. It would seem wise to consume manure-grown fish only after thorough cooking. This is advisable, however, for all fish, even those caught in the open sea. Gjerde (1976) reports bacterial evaluations of 200 samples of raw frozen marine fish, packed for sale. Fecal streptococci were found in 53% of the samples. Fecal coliforms (50 to 100/g) were found in 16% of the samples including *Escherichia coli* (50 to 100/g) in 10%. Such contamination is possibly ubiquitous within the food fish industry.

THE RANGE OF FISH YIELDS FROM MANURED PONDS

To get from published data the maximum values of manure or other organic waste needed as substrates for in-pond growth of natural foods, it is necessary to concentrate on those tests in which pond management was appropriate for a manure-loaded system. This is usually reflected by high fish yields. Tests in which manure was directly incorporated into the feed pellet are not discussed here as this approach gives poor fish growth, as discussed above.

There are reports of manuring ponds in Europe, in which manure is applied in large amounts (usually in heaps) once or a few times during the growing season. Fish yields here are usually below 1,000 kg/ha/yr and often as low as a few hundred. Such examples should not be imitated since such low yields can be attained anyway by appropriate stocking with or without occasional chemical fertilization. Work at the Centro de Pesquisas Ictiologicas, Fontalega, Brazil in 1977 (L. Lovshin, pers. comm.) is better suited to manuring ponds at high ambient temperatures. Here, yields of 3 to 4 kg/ha/d were attained using monoculture of a tilapia hybrid and applying 800 to 1,400 kg cow manure/ha once a week. This yield range is also, however, well below the target of 20 to 30 kg/ha/d.

There are reports from the Research Station at Ginossar, Israel for pond culture using supplemental feeding (grain pellets enriched with 15% fish meal) plus manuring. Yields of 30 to 50 kg/ha/d are reported, but much of these result from the supplemental feed: a luxury which cannot be afforded in much of the world.

Fish yields of 20 to as high as 32.5 kg/ha/d, averaged over approximately 120-d growing seasons, were attained by Buck et al. (1978) in Illinois with swine manure and at the Research Station, Dor, Israel, using primarily a polyculture system of common carp, tilapia hybrids and silver carp with cow or chicken manure applied daily at a rate increasing with the fish biomass, from 20 to approximately 150 kg dry organic matter/ha, 6 times per week.

SOME REASONS FOR LOW FISH YIELDS ATTAINED IN MANURE-LOADED PONDS

Poor yields in fish culture, as in animal husbandry in general, are usually the result of poor management. Unforseeable losses may result from prolonged periods of unseasonal cloudy weather (and hence low photosynthetic production, anoxia and fish kills) but proper management must consider such general climatic conditions as well as the pond environment.

The low fish yields discussed above result primarily from two deficiencies: improper fish stocking and improper use of manure. Monoculture, unless using a species that has adaptable feeding habits, e.g., the milkfish, *Chanos chanos* (Odum 1970), results in inefficient utilization of the natural food. Polyculture requires species that will exploit all the available feeding niches (Tang 1970). Adequate stocking densities are also required (Figure 1) as fish yields will increase with increasing fish density up to the carrying capacity of a pond (Hepher 1975). Exceeding the carrying capacity results in more of the available food energy going into fish maintenance and giving decreased total yields.

Inadequate amounts of manure fail to supply the substrates required for microbial growth. Also, with large piles of manure in the pond, aerobic digestion and high microbial activity occur only at the surface of the pile. A few mm within the pile, conditions are anaerobic, giving inefficient conversion of substrate C into microbial cells, low microbial activity, and production of three toxic agents: H_2S, NH_3 and CH_4.

Poor microbial development, poor digestion of the manure and hence low autotrophic-photosynthetic and heterotrophic productivity, can also result from ponds having acid soils and/or very soft water. Fish yields here will be correspondingly low.

SOME REASONS FOR HIGH FISH YIELDS IN MANURE-LOADED PONDS

Pond design and construction appropriate to manuring will help in attaining good fish yields but insufficient data exist to give exact parameters for this. The following recommendations are derived from experience at Dor and those of Buck et al. (1978).

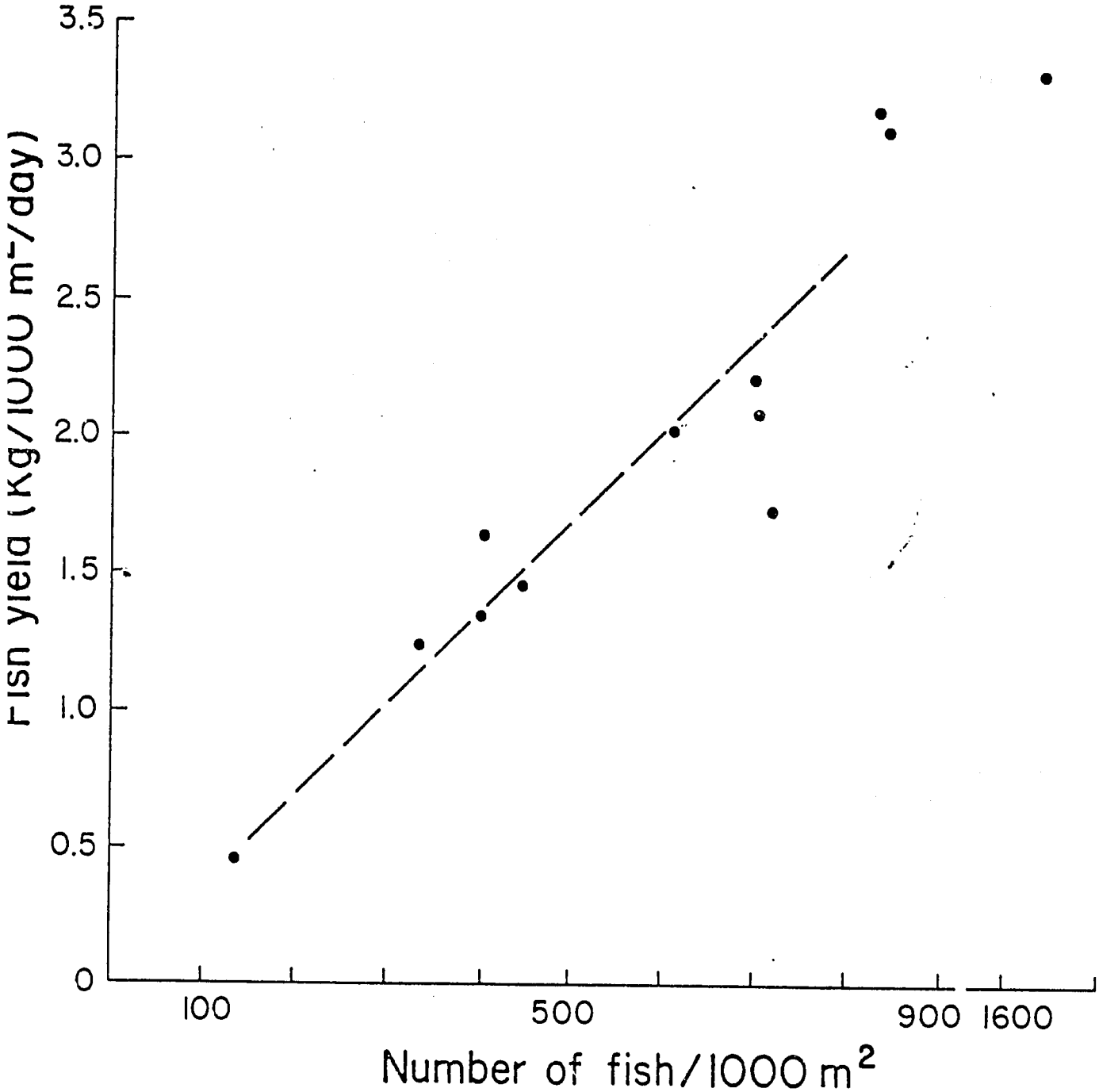
3.5
3.0
2.5
2.0
1.5
1.0
0.5
0
Fish yield (Kg/1000 m²/day)
100
500
900
1600
Number of fish/1000 m²

150

The pond bottom should contain adequate fines for suspension in the water ("muddying"). These can provide colonization foci for microorganisms. The banks of the pond should be accessible to allow manure distribution along the pond. Relatively shallow ponds (0.7 to 1.0 m deep) have given good yields. Small ponds (0.04 ha) give yields of 30 to 32 kg/ha/d throughout the season. One pond of this size can supply the entire protein requirement for a family of six. Ponds of 0.1 ha gave yields of 20 to 22 kg/ha/d throughout the season. These ponds were deeper (maximum depth 1.7 m) and appear to have had fewer fine particles in the pond bottom than the smaller ponds. A 1.5-ha test pond, much of which was less than 1 m deep, gave yields of 30 kg/ha/d for 40 d after which the common carp (at 300 to 400 g) ceased to grow. Wild tilapia fry appeared at about this time, but it is not certain that their competition was the problem. Nitrite accumulation in the pond water has on occasion been found concurrently with decreased fish growth rate (D. Engstrom, pers. comm., New Alchemy Inst.).

Although all the above ponds are considered as standing water, the small ponds have more frequent water changes than the large ponds according to rough metering of the water used to replace evaporation and seepage. Their water is completely changed about every 40 to 60 d.

Ponds should be drainable to remove or kill all the fish. If excessive uncontrolled breeding occurs, this will place high demands on the available natural foods and retard the growth of adult fish. These fry must be removed.

Stocking an adequate number of fish is essential. Figure 1 shows the relation between polyculture stocking densities and fish yields. At a harvested density of 8,400 fish/ha, the carrying capacity of these ponds was not exceeded, but increasing the harvested density to 16,000 fish/ha produced no increase in yield. For these conditions, therefore, the carrying capacity of the ponds lay between 8,400 and 16,000 fish/ha. Fewer than 8,400 fish/ha produced consistently lower yields.

Polyculture, or use of species with diverse feeding habits, is essential. The pelagic and benthic niches must both be cropped to give complete food utilization. In the initial work at Dor, common carp, *Sarotherodon aureus* and silver carp fingerlings were stocked in the ratio of about 5:2.5: 1.5. It was found that the relative density of the tilapia could be increased to make it the dominant species, while still maintaining the yield of about 30 kg/ha/d. Fish may cross specific feeding niches when faced with a shortage of their preferred feeds (Summerfelt et al. 1970; Terrell and Fox 1974); see Table 4.

Table 4. Normal feeding habits of some cultured fish species.

Feeding habit	Species
Algae and plankton	Silver carp
	Milkfish *(Chanos chanos)*
	Sarotherodon galileus
	Sarotherodon niloticus
	Grey mullet *(Mugil cephalus)*
Filamentous algae	Milkfish
Zooplankton	Bighead carp *(Aristichthys nobilis)*
Macrophytes	Grass carp *(Ctenopharyngodon idella)*
Benthos	Common carp *(Cyprinus carpio)*
	Black carp *(Mylopharyngodon piceus)*
	Mud carp *(Cirrhina molitorella)*
Detritus	*Sarotherodon aureus*
	Common carp
	Milkfish
	Sarotherodon niloticus
	Grey mullet

In manure-loaded ponds, there is a very high production of detritus in proportion to food organisms. The high heterotrophic microbial production has already been discussed. Zorn (pers. comm.) has demonstrated at Dor that there is higher recruitment of chironomid larvae in manure-loaded ponds than in conventional ponds with supplemental feeding. A stocking emphasis must therefore be placed on bottom feeding fish.

In the manure-loaded ponds that produced high fish yields, manure (dry organic matter) was added daily at a rate of about 2 to 4% of fish biomass. This rate was continued until maximum daily loadings of 150 kg dry organic matter/ha/d were reached. The manure was added in liquid form (cattle manure) or as moist solids (poultry manure), but the amount added was always calculated on a dry organic matter basis.

If the water is soft, or the pond bottom is acidic (excessive humus), addition of inorganic fertilizers may be necessary. In the Dor experiments, ammonium sulfate and superphosphate were added (Schroeder 1978) but it is not certain that this rate of inorganic fertilization was required. The C:N:P ratio of most manures is adequate for microbial production. The dual demand for N and P by photosynthetic and bacterial production may, however, warrant the use of inorganic fertilizers, or mixing manures (e.g., chicken and pig, with cattle), to maintain a suitable C:N:P ratio.

Summary

1. Daily manure application to a pond at one or several locations, gives maximum fish yields of about 30 kg/ha/d, averaged over the growing season.

2. The manuring rate, computed as dry organic matter, is at 2 to 4% of the fish biomass daily. The manure is supplied in liquid or moist form, retaining the urine and feces.
3. Fish yields appear to be based on a dual food web: autotrophic-photosynthetic, and heterotrophic (bacteria and protozoa).
4. Autotrophic production is limited by available solar energy penetrating the pond water. Heterotrophic activity is limited by digestion rate of the carbon-rich substrate (manure in this case).
5. Heterotrophic activity is maximum at the pond bottom-water interface. Therefore, layers of manure thicker than a few mm result in inefficient digestion and low microbial production.
6. Adequate chemicals must be present to allow high primary production and microbial development. This is especially important to consider in ponds with soft water or with very acidic soils.
7. Fish stocking in standing water ponds should be a polyculture or a fish type that harvests the various natural food niches. A high enough density of fish must be added to utilize the carrying capacity of the pond.
8. Water temperatures in excess of 18°C seem advisable for good microbial development in a manure-loaded pond.
9. Desirable pond characteristics are: accessible banks to permit spreading of the manure; water depths of about 0.7 to 1.0 m; adequate suspendable fines in the pond bottom; water with moderate alkalinity or hardness; non-humic pond bottom; bottom with minimum seepage and ability to drain the pond or to remove all the fish.
10. Experiments have produced high fish yields with standing stock fish biomass up to 700 g/m^2 pond area or 7 t/ha.

References

Abdo, K., K. King and R. Engel. 1964. Protein quality of rumen microorganisms. J. Anim. Sci. 23: 734-736.

Allen, G.H. and R.L. Carpenter. 1977. The cultivation of fish with emphasis on salmonids in municipal wastewater lagoons as an available protein source for human beings, p. 479-528. *In* F. D'Itri (ed.) Wastewater renovation and reuse. Marcel Dekker, Inc., New York.

Almazan, G. and C.E. Boyd. 1978. Plankton production and tilapia yields in ponds. Aquaculture 15: 75-77.

Anderson, J. and A. MacFayden, Editors. 1976. The role of terrestrial and aquatic organisms in decomposition processes. Blackwell Scientific Publ., London.

Anon. 1977. Algae production in the Negev, Israel. National Council for Research and Development Annual Report. Prime Minister's Office, Jerusalem. 7 p.

Atack, T., K. Jauncey and A. Matty. 1979. The utilization of some single cell proteins by fingerling mirror carp *(Cyprinus carpio)*. Aquaculture 18: 337-348.

Beck, H., J. Gropp, H. Koops and K. Tiews. 1979. Single cell protein in trout diets, p. 269-280. *In* J.E. Halver and K. Tiews (eds.) Finfish nutrition and fishfeed technology. Vol. II. Heenemann Verlagsgesellschaft mbH, Berlin.

Bellamy, W. 1975. Conversion of insoluble agricultural wastes to SCP by thermophilic microorganisms. *In* S. Tannenbaum and D. Wang (eds.) Single cell protein Vol. 2. MIT Press, Cambridge, Mass.

Bergstrom, E. 1979. Experiments on the use of Single Cell Protein in Atlantic salmon diets, p. 105-116. *In* J.E. Halver and K. Tiews (eds.) Finfish nutrition and fishfeed technology. Vol. II. Heenemann Verlagsgesellschaft mbH, Berlin.

Boyd, C.E., P. Romaire and E. Johnston. 1978. Predicting early morning dissolved oxygen concentrations in channel catfish ponds. Trans. Amer. Fish. Soc. 107: 484-492.

Boyd, C.E. and E. Searsbrook. 1974. Effects of agricultural limestone on phytoplankton communities of fish ponds. Arch. Hydrobiol. 74: 336-349.

Buck, H., R. Baur and C. Rose. 1978. Polyculture of Chinese carps in ponds with swine wastes, p. 144-155. *In* R. Smitherman, W. Shelton and J. Grover (eds.) Culture of exotic fishes symposium proceedings. American Fisheries Society, Auburn, Alabama.

Campos, E. and I. Sampaio. 1976. Swine feces recycling in carp feeding. Arg. Esc. Vet. U.F.M. 28: 147-152.

Doetsch, R. and T. Cook. 1973. Introduction to bacteria and their ecobiology. University Park Press, Baltimore, Md.

Edberg, N. and B. Hosten. 1973. Oxygen uptake of bottom sediments studied in-situ and in the laboratory. Water Res. 7: 1285-1294.

FAO. 1977. China: recycling of organic wastes in agriculture. FAO Soils Bulletin 40, 107 p. FAO, Rome.

Fish, G. 1955. The food of tilapia in East Africa. Uganda J. 19: 1.

Fowler, J. and J. Lock. 1974. Inclusion of dried poultry waste as a feed ingredient in cat fish rations. Feedstuffs 46: 32-34.

Gjerde, J. 1976. Bacteriological evaluation of frozen raw fish products. Fisk Dir. Skr. Serv. Ernaering 1: 17-22.

Hargrave, B. 1976. The central role of invertebrate feces in sediment decomposition. *In* J. Anderson and A. MacFayden (eds.) The role of terrestrial and aquatic organisms in decomposition processes. Blackwell Scientific Publ., London.

Hepher, B. 1962. Primary production in fish ponds and its application to fertilization experiments. Limnol. Oceanogr. 7: 131-136.

Hepher, B. 1975. Supplementary feeding in fish culture, p. 183-198. *In* Proc. 9th Int. Congr. Nutrition, Mexico, 1972. Vol. 3. S. Karger Publ., New York.

Hillbricht-Ilkowska, A., I. Spodniewska, T. Weglenska and A. Kurabin. 1972. The seasonal variation of some ecological efficiencies and production rates in the plankton community of several Polish lakes, p. 111-127. *In* Z. Kajak and A. Hillbricht-Ilkowska (eds.) Productivity problems of freshwaters. PWN Polish Scientific Publishers, Warsaw.

Hobson P. 1976. Trends and innovations in rumen microbiology. *In* F. Skinner and D. Carr (eds.) Microbiology in agriculture,

fisheries and food. Academic Press, New York.

IAEA. 1975. Tracer studies on non-protein nitrogen for ruminants II: Proceedings. Research Coordination and Panel. Unipub, New York.

Jhingran, J. 1977. Fish and fisheries in India. Hindustan Publ. Co., Delhi.

Kerns, C. and E. Roelofs. 1977. Poultry wastes in the diet of Israeli carp. Bamidgeh 29: 125-135.

Kajak, Z. and A. Hillbricht-Ilkowska. Editors. 1972. Productivity problems of freshwaters. PWN Polish Scientific Publishers, Warsaw.

Kusnetsov, Y. 1977. Consumption of bacteria by silver carp. J. Ichthyol. 17: 398-403.

Lombrozo, E. and G. Schroeder. Some physical and chemical characteristics of fresh and fermented cow manure. (In preparation)

Lu, J. and N. Kevern. 1975. The feasibility of using waste materials as supplemental fish feed. Progr. Fish Cult. 37: 241-244.

Mann, K. 1972. Macrophyte production and detritus food chains in coastal waters. Mem. Ist. Ital. Idrobiol. 29 (Suppl): 353-383.

Marias, J. and T. Erasmus. 1977. Chemical composition of alimentary canal contents of mullet caught in Sworthops estuary. Aquaculture 10: 263-273.

Matty, A.J. and P. Smith. 1978. Evaluation of a yeast, a bacterium, and an alga as a protein source for rainbow trout. I. Effect of protein level on growth, gross conversion efficiency and protein conversion efficiency. Aquaculture 14: 235-246.

May, R. Editor. 1976. Theoretical ecology. Blackwell Scientific Publ., London.

Moav, R., G. Wohlfarth, G. Schroeder, G. Hulata and H. Barash. 1977. Intensive polyculture of fish in freshwater ponds. Aquaculture 10: 25-43.

Morrison, F. 1959. Feeds and feeding. Morrison Publ. Co., Iowa.

Newell, R. 1970. The role of detritus in the nutrition of two marine deposit feeders. Proc. Zool. Soc. London 144: 25-45.

Noriega, P. Primary productivity and related fish yields in intensely manured fish ponds. Aquaculture. (In press)

Odum, W. 1968. The ecological significance of fine particle selection by the striped mullet *Mugil cephalus*. Limnol. Oceanogr. 13: 92-97.

Odum, W. 1970. Utilization of the direct grazing and plant detritus food chains by the striped mullet *Mugil cephalus*, p. 222-240. *In* H. Steele (ed.) Marine food chains. Oliver and Boyd, London.

Rodina, A. 1972. Methods in aquatic microbiology. University Park Press, Baltimore, Md.

Schroeder, G. 1973. Factors affecting feed conversion ratio in fish ponds. Bamidgeh 25: 104-113.

Schroeder, G. 1974. Use of fluid cowshed manure in fish ponds. Bamidgeh 26: 84-96.

Schroeder, G. 1975a. Some effects of stocking fish in waste treatment ponds. Water Res. 9: 591-593.

Schroeder, G. 1975b. Night-time material balance for oxygen in fish ponds receiving organic wastes. Bamidgeh 27: 65-74.

Schroeder, G. 1978. Autotrophic and heterotrophic production of microorganisms in intensely manured fish ponds and related fish yields. Aquaculture 14: 303-325.

Schroeder, G. and B. Hepher. 1979. Use of agricultural and urban wastes in fish culture, p. 487-489. *In* T.V.R. Pillay and W.A. Dill (eds.) Advances in aquaculture. Fishing News Books Ltd., Farnham, Surrey, England.

Shiloh, S. and S. Viola. 1973. Experiments in the nutrition of carp growing in cages. Bamidgeh 25: 17-31.

Spataru, P. 1976. Natural feed of *Tilapia aurea* in polyculture with supplementary feed and intense manuring. Bamidgeh 28: 57-63.

Spataru, P. 1977. Gut contents of silver carp and some trophic relationships to other fish species in polyculture system. Aquaculture 11: 137-146.

Sreenevasan, A. n.d. Application of limnological and primary production studies in fish culture. Report from the Freshwater Biological Station, Bhavanisagar, India. 12 p.

Stickney, R. and H. Simmons. 1977. Growth responses of *Tilapia aurea* to feed supplemented with poultry waste. Texas J. Sci. 29: 93-99.

Summerfelt, R., P. Mauck and G. Mensinger. 1970. Food habits of carp *Cyprinus carpio* L. in five Oklahoma reservoirs. Proc. Ann. Conf. Southeast. Assoc. Game Fish Comm., 24: 352-377.

Tacon, A. and P. Ferns. 1976. Use of activated sludge from domestic sewage in trout diets. Nutr. Rep. Int. 13: 549-562.

Tamiya, H. 1957. Mass culture of algae. Ann. Rev. Plant Physiol. 8: 309-334.

Tang, Y. 1970. Evaluation of balance between fishes and available fish foods in multi-species fish culture ponds in Taiwan. Trans. Amer. Fish. Soc. 99: 708-718.

Terrell, J. and A. Fox. 1974. Food habits of grass carp in the absence of aquatic vegetation. Proc. Ann. Conf. Southeast. Assoc. Game and Fish Comm., 28: 251-259.

Thomaston, W. and H. Zelda. 1961. Results of 6 years investigation of chemical soil and water analysis in Georgia fish ponds. Proc. Ann. Conf. Southeast. Assoc. Game and Fish Comm. 15: 236-245.

Wiederholm, T. and L. Eriksson. 1977. Benthos of an acid bottom lake. Oikos 29: 261-267.

Wohlfarth, G. 1978. Utilisation of manure in fishfarming, p. 78-95. *In* C.M.R. Pastakia (ed.) Report of the Proceedings, Fishfarming and Wastes, Institute of Fisheries Management and Society of Chemical Industry, London.

Yashouv, A. 1971. Interaction between common carp and silver carp in fish ponds. Bamidgeh 23: 85-92.

Yurkowski, M. and J.L. Tabachnek. 1979. Proximate and amino acid composition of some natural fish foods, p. 435-448. *In* J.E. Halver and K. Tiews (eds.) Finfish nutrition and fishfeed technology. Vol. 1. Heeneman Verlagsgesellschaft mbH, Berlin.

A Theoretical Comparison of Waste Treatment Processing Ponds and Fish Production Ponds Receiving Animal Wastes

COLIN E. NASH
AND
CAROL M. BROWN
Kramer, Chin & Mayo, Inc.
1917 First Avenue
Seattle, Washington 98101

Abstract

The characteristics of waste treatment ponds and fish culture ponds, as they relate to an integrated waste/aquaculture system, are described. Both pond types have a common purpose to promote the efficient transfer and circulation of water in order to provide oxygen for a biological community, and to maintain a suitable environment for aquatic life.

Biological models are provided of two integrated systems that provide a continuous harvest of fish in association with an acceptable effluent.

Introduction

The world's energy and food crises are redirecting attention to a wiser use of all resources. One major resource is the waste from agriculture of both animal or vegetable origins, either directly from the farm or as a by-product of processing plants.

Animal wastes have many qualities which make them resources to be valued, in addition to their use for refertilization of the soil through land spreading. Some wastes have fuel values comparable to the oil bearing shales; others can be readily converted to methane gas by anaerobic digestion. They contain proteins, amino acids and nutrients which can be processed into animal feeds or into feed components. The reexamination of animal wastes for practical applications is increasing in importance across a broad technological front and is enhanced by advancing techniques to reduce odor and to remove the dangers of infectious contaminants and pollutants.

Aquaculture has made use of animal wastes as fertilizers for centuries, increasing pond production of both animals and plants through direct and indirect utilization of nutrients. All of the traditional practices for pond fertilization, however, have been conducted at an empirical level using extensive production techniques. Present economic pressures for maximizing pond production and minimizing production costs for aquaculture crops are now compelling reasons to place more emphasis on understanding the limits of fertilization, and also to explore the integration of aquaculture and waste treatment. In particular, there is the need to enumerate and define these specific limits for production, design and engineering of the optimum-production facilities.

It is important to note in any reference to animal waste/aquaculture integration systems that "treatment" ponds are required by regulation to produce an effluent that meets certain standards for quality, whereas ponds receiving animal waste as a fertilizer for fish production are under no such regulations in most countries, and

159

may or may not produce any effluent at all. The extent to which a waste treatment pond or lagoon can be used for fish culture is therefore contingent on the standards set for the effluent from the system. Although the waste treatment pond is often regarded as the ultimate in nutrient resources for fish culture, the controlled production of fish in a treatment pond as a part of the dynamic treatment process to remove nutrients is a complex problem.

As a general rule, the principle of using fish culture as a method of treatment of animal wastes to meet strict standards is not desirable, but is an acceptable practice that can recover and redirect some of the valuable components found in treated wastes. However, as the use of animal wastes as fish pond fertilizers continues to increase, and the volumes of fertilizer used and the production weights of fish increase dramatically to higher and higher levels, the distinction between the intensive pond fertilization process, complete with pond aeration, and the waste treatment process becomes less and less. The major difference continues to be the requirement of the treatment process to meet defined standards for the effluent.

Comparison of Animal Manures and Human Sewage

There are several parallels between animal manures and human sewage, but there are significant differences in composition and treatments. The successful culture of fish, shellfish and water fowl in dilute sewage plant effluents has been demonstrated in many countries. The necessary conditions for success given by Babbit and Baumann (1958) are: settled sewage in a pond not more than 2 m deep, adequate diluting water to enter at a number of places to assure adequate distribution and mixing of the sewage solids. The oxygen content must be at least 4 mg/l, and the system should exclude toxicants, oily wastes and other materials deleterious to the health of the livestock. They also report that the sewage from up to 5,000 persons per hectare (45 kg BOD) can be treated with over 90% efficiency provided that the dilution and aeration are adequate in association with the fish production.

Undiluted animal manure is similar to sewage sludge and can be treated by anaerobic microbial digestion in lagoons. Integration of agricultural animal waste treatment practices and aquaculture, however, has centered on the aerobic secondary treatment processes for handling diluted and aerated manures, because of the more suitable form of nutrients at that level of decomposition and the similarity of the types of facilities used. The management of animal wastes involves four principal operations, namely, collection, storage, treatment and utilization or disposal. The traditional aquaculture practice of keeping animals in buildings raised over fish ponds bypasses the need for collection, storage and treatment, and deals solely with utilization or disposal. This also effectively eliminates one of the more expensive requirements of animal waste handling before use, namely, drying.

Comparison of Facilities

WASTE TREATMENT PROCESSING PONDS

The treatment of animal waste is usually achieved by biological decomposition in lagoons or stabilization ponds. The types and varieties of lagoons are many, depending on their use of aerobic or anaerobic conditions to fulfill the decomposition processes. Aerobic lagoons are often called oxidation ponds. Raceway structures are called oxidation ditches.

Oxidation ponds are relatively cheap wastewater treatment facilities and are widely used in rural areas. In ponds, the wastewater is mixed physically to some degree by the natural elements and internal biological and chemical interactions, but it is often moved more violently by mechanical agitation. Intensive oxidation ditches are more expensive, but efficient in land utilization.

The biology and chemistry of the dynamic interactions of oxidation ponds are complex. Dead organic matter, in the presence of free oxygen in the pond system, goes through the following decomposition cycle. Firstly, some anaerobic decomposition of the easily decomposable products takes place. This produces carbon dioxide, ammonia and hydrogen sulfide. The latter two are both malodorous. Secondly, direct aerobic decomposition takes place using oxygen in the water and from the atmosphere. This process produces carbon dioxide, nitrite nitrogen and sulfur. The same processes continue producing more carbon dioxide, nitrate nitrogen and sulfates. Thirdly, these chemical products are utilized by algae to produce more algal cells and oxygen by photosynthesis. The oxygen, in turn, adds to that already entering the water mass through the surface, and is used by bacteria to decompose further the original waste. The products of this continuing cycle are proteins, carbohydrates and fats in the form of living plants. Plants, in turn, enter the animal food chain with the production of further proteins and fats in the form of living animals. The complex process is simplified diagrammatically in Figure 1.

The biological and chemical symbiosis between bacteria and algae in the oxidation ponds leads to

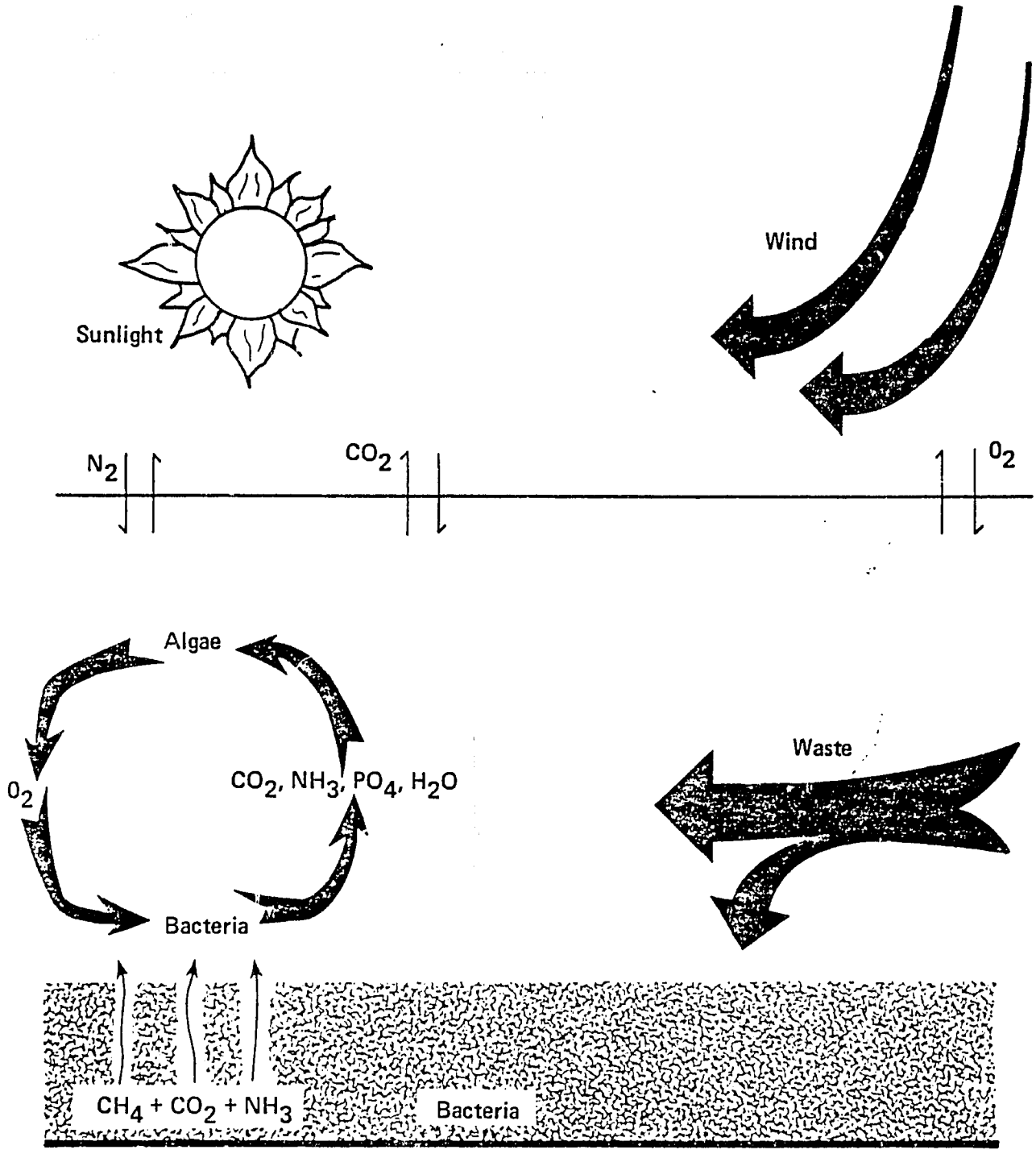

Figure 1. Biological processes in an oxidation pond.

stabilization of the incoming organic waste with time. The length of time required for stabilization is affected by environmental considerations, such as temperature, pH, light and oxygen availability, as well as the presence or absence of such toxic compounds as pesticides, heavy metals, ammonia, chlorine and detergents.

In order to stabilize in the shortest time and to function efficiently, oxidation ponds or lagoons require certain design criteria to be fulfilled. The parameters considered in the design of oxidation ponds are: 1) oxygen supply and mixing, 2) organic loading, 3) retention time, 4) temperature and 5) physical configuration. All are important parameters, but two will be enlarged upon here, namely, temperature and physical configuration.

The depth of oxidation ponds is usually between 1 and 2 m, to allow light penetration without additional agitation. Facultative aerobic lagoons, which are similar to oxidation lagoons but are designed to permit accumulation of solid waste for further anaerobic digestion, are much deeper.

The design standards for oxidation ponds and lagoons are usually set by regulatory authorities. Some typical standards include embankment slopes (1 in 3, or 1 in 4), organic loading rate (2.2 to 5.5 g $BOD_5/m^2/d$ depending on climate), hydrauiic retention time (60 to 120 d), permissible seepage (0 to 6 mm/d), and liquid depth (not less than 0.6 m).

Much of the animal waste treatment process developed to date has been engineered for pig wastes, although it is readily adaptable for treatment of wastes from cattle (both beef and dairy animals) and poultry (ducks and chickens)(Woynarovich 1979). Pig waste has been easier to deal with as it is usually in a slurry which is more manageable. There also has been a greater need because of the heavy odor problem. Manure from cattle is higher in solids and is more fibrous, often causing a buildup of floating matter on the surface of the pond. Poultry waste is usually well mixed with feathers which are a problem, thus encouraging flies and other disease organisms around the pond. Pig houses have been readily adaptable to fish culture ponds, and the slurry wastes from the pigs have been a manageable and effective source of nutrients.

The dimensions of an oxidation pond are, therefore, very specific to the scale of its function, namely, the decomposition and treatment of organic waste from a certain population of people or from a number of animals or birds in an intensive production system. As a general rule, a surface area of 1 ha per 250 people is needed. This is equivalent to a BOD load of about 25 to 50 kg/ha/d. Higher loads increase the retention period and require supplemental aeration.

Large capacity ponds are buffered to changes in many of the components of the dynamic biological and chemical processes, but their efficient operation can be altered by changes which interfere significantly with their balance. Such changes could be brought about by the loading of the biomass in the water body. This loading could be the use of the facility for the farming of other animals, such as ducks, fish or shellfish.

FISH PRODUCTION PONDS

Just as the criteria for the configuration and design of an oxidation pond are important for effective waste treatment, so too are criteria for a fish (or shellfish) pond for effective environmental habitability. There are, of course, many similarities between them. Both facilities have the common purpose to promote the efficient transfer and circulation of water throughout, in order to provide oxygen for a biological community and to maintain a suitable environment for aquatic life.

As a rule, little engineering design work is ever included in the configuration of a fish pond to make it an optimal production unit. This is usually because there is incomplete biodata for the species to be farmed, the site configuration is irregular, and there may be other more critical decisions, such as the source and discharge of water. For all intents and purposes, the engineering of fish ponds in the past has gone no further than the construction of suitable embankments with the inclusion of inlet and outlet sluices. As a result, many ponds have proved to be poor environments for the aquatic animals and have subsequently required additional installations, such as aeration systems, to enable them to meet the production levels originally calculated.

The biology and the environmental factors that affect the growth of fish in fish ponds, together with their particular behavior, dictate the limits of pond production. Furthermore, pond production cannot be estimated unless the water resources and drainage of the system are established. These parameters, in turn, are influenced by the dimensions of the pond, the engineering of the water systems, pond management, and, of course, water quality.

Much of the present design work is based on experiences and facts known to design engineers in hydraulics, soil mechanics and structural materials, and to their ability to interpret and apply data gained from existing fish ponds. The engineer has some basic biological information by which to reason the design of appropriate facilities. For example, large ponds are more stable environments than small ones and can buffer themselves against sudden changes in water quality, outbreaks of disease and poor management practices. They often have the disadvantage of difficulty with harvesting. Small ponds, on the other hand, are easier to maintain

and manage, but are expensive to build and operate and have little with which to counter such emergencies as disease epidemics and environmental changes.

In addition to the importance of depth and surface area to aquatic animals, some consideration must also be made for the growth of other organisms which provide an important dietary component in a fish pond system. Most of the criteria for establishing natural food populations are related to satisfactory conditions for algal production which is a vital component of the food web in the pond system.

Fish ponds are designed and constructed for additional reasons other than the biological needs of the fish. Just as the land farmer needs to observe his stocks daily, so does the fish farmer need ready access for sampling and harvesting, and also continual daily observation. At these times, it may be necessary to drain and fill the pond rapidly without causing unnecessary stress to the fish populations.

The biomass of the fish population (or pond loading) is related to the weight and the length of the fish and to a suitable unit for either pond volume, volume to surface area ratio, or water flow rate through the pond. The biomass of fish (as distinguished from the total biomass of the pond) is first limited by the available oxygen levels in the water and, subsequently, by the buildup of ammonia. With some species of fish, the biomass is influenced by the individual behavior of the species toward territoriality. Oxygen saturation is the key factor in estimating the carrying capacity of any fish pond when the incoming water is the only source of oxygen. If mechanical aeration is used, increased oxygen demands can be met and the limiting factors become the nitrogen compounds. However, mechanical agitation requires energy and hence is an additional expense to the operation's budgets. Oxygen saturation levels in the pond are influenced greatly by temperature, the elevation of the pond system above sea level, and the accumulation of metabolic products.

In addition to influencing the oxygen level, water temperature is a parameter which influences fish growth. The water volume and water quality of a fish pond as they relate to temperature are, therefore, important. Ponds with little circulation and little water exchange may increase rapidly in temperature and suffer from abundant plant growth, fluctuations in oxygen and other dissolved gases, and pH changes.

Facility Sizing

The primary objective of the oxidation pond is BOD removal. The BOD of many animals and poultry wastes are established (Table 1). In an aerated lagoon or pond that does not receive incoming water continuously, the BOD is met by the oxygen introduced through photosynthesis, transfer from the atmosphere across the water surface, and sometimes by floating aerators. The retention time is based on the time required for treatment to achieve an effluent which will meet discharge regulations.

The primary objective of the fish pond is the maximum production of fish on a sustained basis. Production is directly influenced by management or manipulation of the carrying capacity or standing stock. The carrying capacity is directly and indirectly affected by many variables, some of which are critical and limiting. The three most limiting parameters which determine the maximum standing stock of fish and shellfish in a system are dissolved oxygen, gaseous ammonia (NH_3) and stock density. Other key variables are temperature, size of fish, feeding rates, natural processes within the ponds (such as primary productivity), and parameters such as pH, and soil and water chemistry. It is these wide but tolerable ranges of variables which permit the innumerable manipulations by management, produce variations in apparently similar management practices, and cause confusion in the interpretation of practices and observed results.

In a fish pond, oxygen is the first criterion which can influence the standing stock. For flow-through systems, the main source of oxygen is the water flowing into the pond. The following formula is used to determine the

Table 1. Production and some composition data of animal manures*

Animal	Live weight (kg)	Moisture content of waste (%)	Total solids in waste (dry wt g/d/animal)	BOD_5 (g/animal/d)	Approximate composition % total solids N	P
Man	68		91	91		
Pig	45	84-92	268-509	91-159	4.5	2
Beef cattle	454	70-86	1643-3269	463	2.5	1.5
Dairy cattle	454	87	3087-5085	599-835	2.5	0.5
Poultry	2.3	65-75	268-509	7.7	5	1.5

*Converted after various authors from Whetstone et al. (1974).

158

flow rate required to supply sufficient oxygen to maintain minimum oxygen supply:

$$\text{Flow in liters per minute} = C\,(A \times 1440)$$

where: C = oxygen consumed in kilograms per day
A = ambient oxygen minus minimum acceptable oxygen concentrations in mg/l expressed as mg $\times 10^{-6}$
1440 = number of minutes in 24 hr

As an alternative or supplement to water flow, oxygen can be supplied mechanically. Increased standing stock, therefore, is not usually limited by the oxygen content of the incoming water, provided that supplemental aeration is used. However, for static or semi-static ponds, where the only sources of oxygen are exchange at the air/water interface and photosynthesis, the standing stock or pond carrying capacity is low and limited first by the oxygen level.

A similar calculation can be made to determine the flow rate necessary to insure that ammonia concentrations do not exceed lethal limits. By making certain assumptions for the total ammonia produced per unit weight of food consumed, the percent of unionized ammonia, and the tolerable level of unionized ammonia, the flow rate can be calculated which will support the animal populations and prevent fish kills. Although nitrifying bacteria are present in most ecosystems, their effects are not usually considered in such calculations. It is assumed that the added increased production of ammonia from decomposing uneaten food and fecal material (which are often not considered) would offset and balance the effects of nitrification.

A critical pathway has been developed (Figure 2) to illustrate the associations and relationships between the oxidation treatment process of nutrients in a lagoon or pond and the nutrient recovery process by fish in the same environment.

In order to get an understanding of the approximate balance of a nutrient recovery/fish production system, two models (Figures 3 and 4) have been developed. Obviously, many assumptions have been made to obtain the values used; thus, the models should be considered theoretical and are presented only for the purpose of giving relative dimensions to the system. As in any biological system, the paths of energy transfer, losses and efficiencies are poorly understood. No attempt has been made to delineate all of the components, but merely to group them in a few broad categories.

The first scenario (Figure 3) reflects a typical oxidation lagoon with a water exchange rate of once per 30 d. The size of the fish population that could be maintained is based on the availability of oxygen. The starting point for the model is a more or less standard oxidation lagoon loading of 34 kg BOD per hectare per day. The flow chart illustrates the pathways of this waste as it is lost from the system or consumed by the standing stock of omnivorous fish. Wastes from the fish are also recycled back through similar pathways: some of this waste will again be available to the fish. Different transfer efficiencies in the pathways of the pig waste and fish waste have been assumed due to a difference in composition of the wastes. It is assumed that the oxygen demand of the wastes is met by the primary production in the pond and transfers across the water/air interface. Although there will be some reduction of the BOD by direct consumption by the fish, it is assumed in this example that the increase demand of the BOD produced by the fish wastes will utilize any surpluses; therefore, all oxygen requirements of the fish are being met by water exchange. Because any increase in the flushing rate will increase washout of cells and detrital material, the effectiveness of the oxidation pond for wastewater treatment is directly related to water exchange rates. A low exchange rate of once per 30 d is utilized. The standing stock of fish which could be maintained on the available oxygen in such a system is 476 kg/ha.

The second scenario (Figure 4) is an attempt to utilize fully the nutrients available in the waste. Based on available nutrients, it appears that 2,200 kg/ha of fish could be supported, assuming a fish feeding rate of 5% body weight per day, and that 5% of the diet is nitrogen. An exchange rate of approximately once every 10 d is required to supply sufficient oxygen to support this quantity of fish. This assumes that 3.5 mg/l O_2 is available and the oxygen demand is 0.19 kg/100 kg of fish per day.

In both these scenarios, it is important to understand once more that the end results are: 1) a continuous harvest of fish in association with 2) an acceptable effluent of around 20 mg/l BOD.

A search of the literature (Table 2) indicates that the standing stock value of the second scenario is in keeping with practical results obtained under experimental production conditions. If harvests of the stock were based on a more practical operation mode (i.e., fluctuating standing stock with monthly or annual harvests only), the annual yield of the pond would not exceed that of the maximum reported in Table 2. The annual yield thus reflects a theoretical maximum based on nutrients.

The effluent under the two scenarios indicates the degree of treatment based upon retention time, dilution and waste products of the fish. Dilution is the major factor influencing scenario two and has the effect of producing a very acceptable effluent. However, the total weight of BOD discharged per day exceeds that of the first scenario.

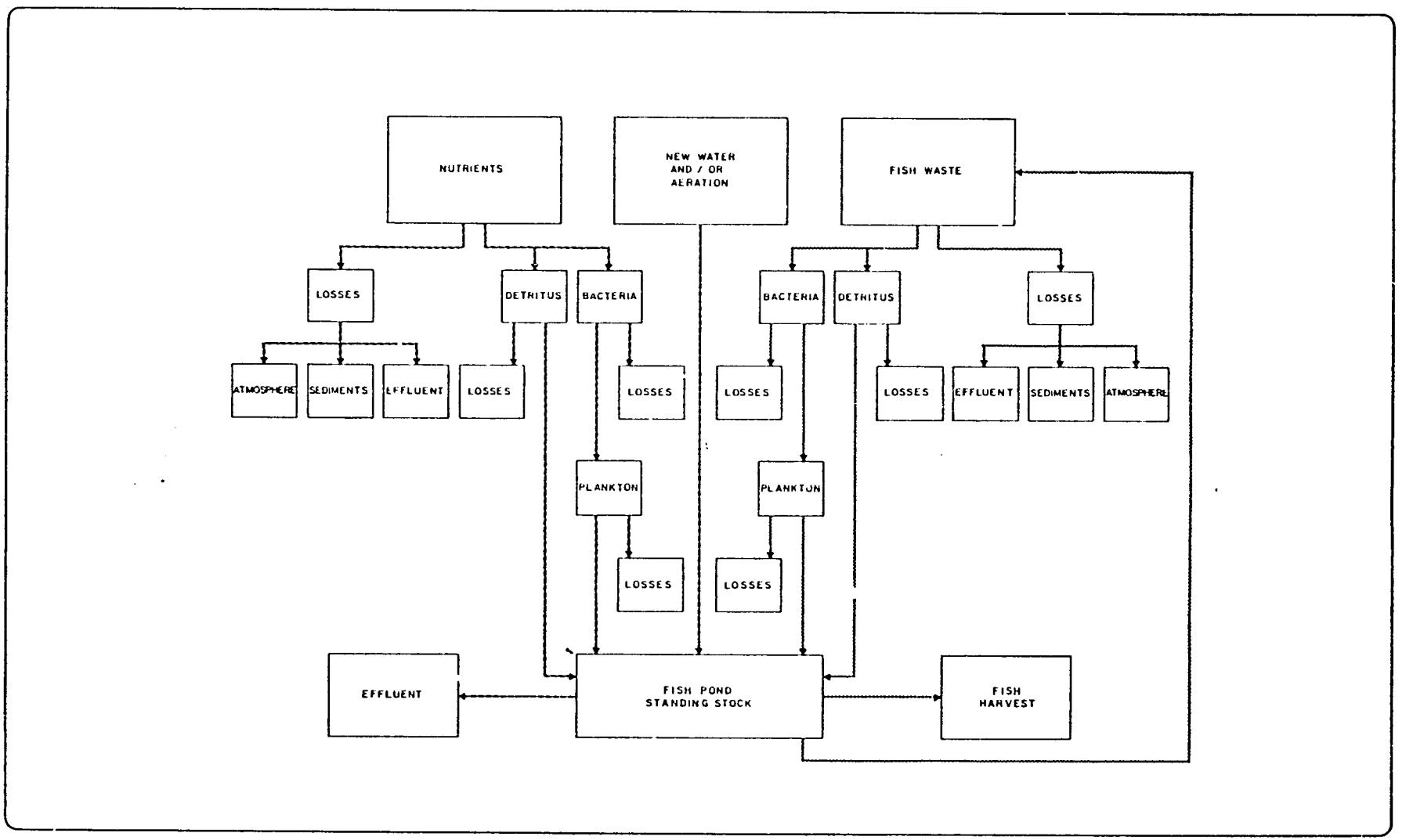

Figure 2. Theoretical pathway of nutrients for fish production.

160

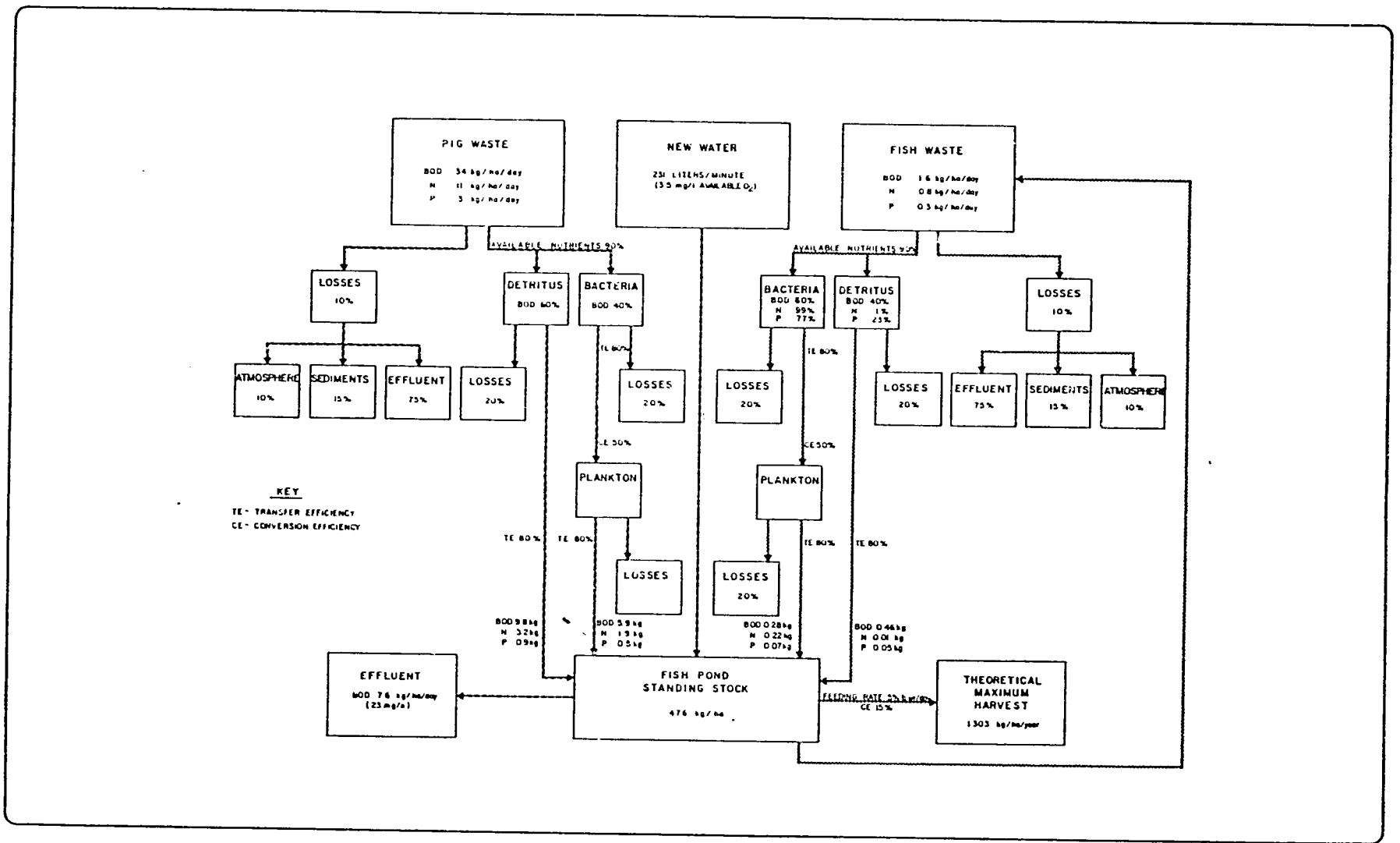

Figure 3. Fish production in oxidation pond with one exchange of water every 30 d.

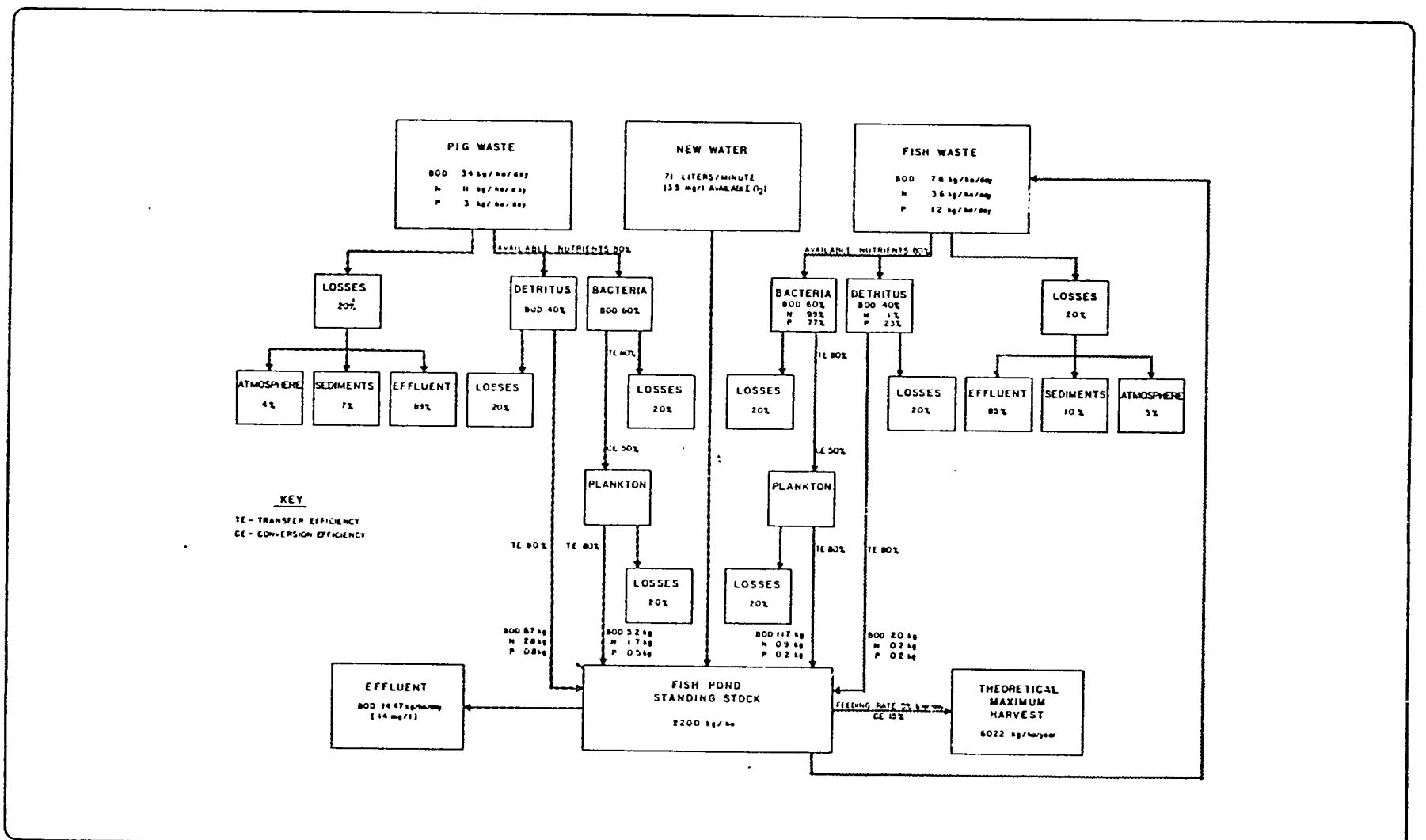

Figure 4. Fish production in oxidation pond utilizing available nutrients only.

Table 2. Annual production data of integrated aquaculture/agriculture waste utilization projects (after several authors).

Annual production (kg/ha)	Fish under culture	Manure source	Country	Reference
4,900	Carps	Fluid cowshed manure	Israel	Hepher and Schroeder 1977
3,500	Polyculture	Ducks	Southeast Asia	Ling 1977
4,140	Carps, catfish, largemouth bass, buffalo fish	Swine manure	USA	Buck, Baur and Rose 1979
2,729*	Silver carp, bighead carp	Sewage lagoons	USA	Henderson 1978
3,000	Polyculture	Domestic septic tank system	Java	Hickling 1962
3,700	Polyculture	Domestic wastewater storage reservoirs	Israel	Hickling 1962
1,000	Carp	Fish ponds receiving sewage waters	Germany	Schaperclaus 1961
2,000	Tilapia	Pig manure	Rhodesia	Van der Lingen 1960
4,000	Tilapia	1,000 ducks	Rhodesia	Van der Lingen 1960
3,000	Tilapia	Compost and farmyard manure	Madagascar	Gruber 1966
1,300	Carp	Town sewage effluents	Poland	Wolny 1962

*Area equivalents

Discussion

For a number of reasons, namely, 1) the need for the effluent to meet regulatory standards, 2) the relatively low standing stock of fish and 3) the imbalances which may occur to upset the system as a result of other priorities, it is not desirable to consider the utilization of animal waste with a fish culture system as a method of treatment or as a means of waste disposal in the proper sense of these terms.

This is far from saying that the utilization of animal wastes with fish culture systems is not practicable. Fish culture integrated with animal waste utilization is a highly recommended way to recover much of the nutrient value of animal wastes. However, it is not waste treatment per se. The ideal facility incorporates integrated animal waste/fish culture pond system(s) for the purpose of maximum fish production per unit area followed by a proper waste treatment pond for the purpose of purifying the effluent. Manure lagoons and oxidation ditches for animal waste treatment are now permanent fixtures of many agricultural systems. As treatment facilities, they have to be well designed, well operated, and well maintained if they are to be available at all times for processing waste. Fish ponds, on the other hand, are more flexible in management needs and must be harvested in response to fluctuating market demands. The recommended approach is a combination of two pond systems.

Fish production using a combination of waste nutrients and a high water flow, can be significant. However, under high rates of water flow, retention times are short and, although the effluents may be low in BOD concentration, it is a direct result of dilution and not the result of treatment.

The restraints to utilization of animal wastes in aquaculture have been well summarized by Allen and Hepher (1979). Briefly, they listed dissolved oxygen levels in the ponds, toxic materials in wastewaters, taste and odors in fish, parasites and diseases, public health problems, pond effluent standards and public acceptance. They did not include engineering as a constraint, which is correct. The engineering of good integrated pond systems is, however, very vital. Well-engineered systems are dependent on good biocriteria. For aquaculture, this is still woefully lacking; therefore, the possibility to engineer totally integrated animal waste/aquaculture systems that will reliably attain high yields of fish, as well as acceptable effluent quality, is still futuristic.

References

Allen, G.H. and B. Hepher. 1976. Recycling of wastes through aquaculture, and constraints to wider application, p. 478-487. *In* T.V.R. Pillay and W.A. Dill (eds.) Advances in aquaculture. Fishing News Books Ltd., Farnham, Surrey, England.

Babbit, H.E. and E.R. Baumann. 1958. Sewerage and sewage treatment. John Wiley & Sons, Inc., New York.

Buck, D.H., R.J. Baur and C.R. Rose. 1976. Experiments in recycling swine manure in fish ponds, p. 489-492. *In* T.V.R. Pillay and W.A. Dill (eds.) Advances in aquaculture. Fishing News Books Ltd., Farnham, Surrey, England.

Gruber, R. 1960. Considerations sur l'amélioration des rendements en pisciculture congolaise. Bull. Agric. Congo Belge. 51(1): 139-157. (In French)

Henderson, S. 1978. An evaluation of the filter feeding fishes, silver and bighead carp, for water quality improvement, p. 121-136. *In* R.O. Smitherman, W.L. Shelton and H.J. Grover (eds.) Culture of exotic fishes symposium proceedings. Fish Culture Section, American Fisheries Society, Auburn, Alabama.

Hepher, B. and G.L. Schroeder. 1977. Wastewater utilization in Israeli aquaculture, p. 529-559. *In* F. D'Itri (ed.) Wastewater renovation and reuse. Marcel Dekker, Inc., New York.

Hickling, C.F. 1962. Fish culture. Faber & Faber, London.

Ling, S.W. 1977. Aquaculture in Southeast Asia. Contribution No. 465. College of Fisheries, University of Washington, U.S.A. 108 p.

Schaperclaus, W. 1961. Lehrbuch der teichwirtschaft. P. Parey, Berlin.

Van der Lingen, M.I. 1960. The use of animal manures and the integration of animal keeping and fish culture in tilapia culture. Publ. Cons. Sci. Afr. S. Sahara. (63):212-216.

Whetstone, G.A., H.W. Parker and D.M. Wells. 1974. Study of current and proposed practices in animal waste management. EPA 430/9-74-003. United States Environmental Protection Agency, Washington, D.C.

Wolny, P. 1962. Przydatnosc oczyszczonych sciekow miejskich do hodowli ryb. Roczn. Nauk Rol. (B), 81(2):231-250. (In Polish, English summary)

Woynarovich, E. 1979. The feasibility of combining animal animal husbandry with fish farming, with special reference to duck and pig production, p. 203-208. *In* T.V.R. Pillay and W.A. Dill (eds.) Advances in aquaculture. Fishing News Books Ltd., Farnham, Surrey, England.

164

APPENDIX 9

ABSTRACTED

IDRC-TS8e

Compost, Fertilizer, and Biogas Production from Human and Farm Wastes in the People's Republic of China

Editors: Michael G. McGarry and Jill Stainforth

Translated by Lee Thim Loi from *A Compilation of Data on the Experience and Sanitary Management of Excreta and Urine in the Village,* published by The People's Hygiene Publisher, People's Republic of China.

165

Research Results on the Effectiveness of Excreta Treatment in Biogas Plants*

Some of the society teams in the district of Mien Chu and other districts in our province have combined the local methods of biogas production with the management and disposal of excreta. To investigate the changes caused in the parasitic eggs and pathogens, and in the efficiency of fertilizer by the fermentation of the fecal liquid in the biogas plant, a year-long investigation was carried out on 19 biogas plants in the districts of Mien Chu, Chung Chiang, and Ann Hsien, and the details are given below.

Parasite Egg Count and Distribution in Fecal Liquid

Samples were taken from the intake chamber, the bottom layer of the fermentation tank, the fecal liquid in the bottom layer of the outlet chamber, and the applied fecal liquid in the upper layer of the outlet chamber in each of the fermentation tanks under investigation. The samples were then examined using the methods described below.

A fixed amount of fecal liquid at a given water concentration should be prepared and the number of parasitic eggs in every 10 ml of the fecal liquid should then be counted. A similar method can be used to determine the number of parasitic eggs in the top, middle, and lower layers of the fecal liquid in the outlet chamber.

There were more parasite eggs in the fecal liquid in the intake chamber than in the tank bottom or outlet bottom, and there were fewest in the applied fecal liquid. The number of parasite eggs in the applied fecal liquid was 93.6% lower than in the intake chamber (Table 14).

The number of parasite eggs in the outlet chamber was the highest in the lower layer (79.7%), followed by the middle layer (17.6%), and lowest in the upper layer (2.7%) (Table 15).

The Drop Board's Effect on Parasite Egg Distribution

The percentage reduction of the parasite eggs in the applied fecal liquid was 80% before and 98.23% after installing the drop board, showing an increase of 18.23% (Table 16).

Parasite Egg Viability in Winter and Summer

Biogas production can be affected both in the summer (air temperature 28 °C and tank temperature 23 °C) and the winter (air temperature 0 °C and

* This preliminary report was prepared by the prevention of communicable disease office of the district of Mien Chu revolution committee, Province of Szechuan.

106

Table 14. Distribution of parasitic eggs in the fecal liquid.*

Area sample taken	No. of exam.	Avg no. of eggs (no./100 ml)
Intake chamber	45	23852
Tank bottom	35	17363
Outlet bottom	45	15132
Applied fecal liquid	45	1505
(%) Reduction of parasitic eggs in the applied fecal liquid compared to number in intake chamber: 93.6%		

*No. of biogas plants tested: 19. Dates tested: January–June 1972.

Table 15. Number of parasite eggs in various layers of the outlet chamber.

Layer sample taken	No. of exam.	Avg no. of eggs (no./100 ml)	%
Upper	13	403	2.7
Middle	13	2817	17.6
Lower	13	12704	79.7
Total		15924	100

tank temperature 10 °C). Night soil containing schistosome, hookworm, and ascarid eggs was collected in January and June and thoroughly mixed. These samples (of about 120 g each) were placed in several porous plastic bags with four to six openings per cm^2, and put into the biogas fermentation tank and then removed at fixed time intervals. After incubation the schistosome eggs were examined. The soil and sand incubation method with isolation was used to determine the number of hookworms. The ascarid eggs were collected, incubated, and observed in terms of their viability. Each time samples were taken, the temperature, pH value, and the ammonia concentration of the fecal liquid were measured and recorded.

The longevity of each type of parasitic egg in winter was determined. Schistosome eggs survived for 37 days. (They survived only 14 days in the summer.) Ninety percent of the hookworm eggs died within 30 days and more than 99% died off in 70-100 days. Between 10 and 90 days after placing the fecal bags in the tanks, the viability of the ascarid eggs ranged from 63 to 79%, which decreased to 47.1% after 100 days. At this stage, the death rate reached 52.9%, showing a remarkable drop in viability (Table 17).

Schistosome Egg Count and Distribution

Six litres of fecal liquid should be taken from the intake area, tank floor, and outlet chamber, along with 48 kg of applied fecal liquid, and these should be left to settle for 1 h. The four samples should be washed and left to settle separately several times before being poured into 4- or 10-litre flasks, incubated at 28 °C, and observed for schistosome flukes after a given time.

Twenty-two samples were taken for examination from each of eight biogas plants in areas reported to have endemic schistosomiasis. Schistosome flukes were found only twice in the intake fecal liquid, and none were found in the applied fecal liquid.

Several experiments have shown that as the ammonia concentration increases, the schistosome egg survival decreases.

Table 16. Number of parasitic eggs in various parts of the fecal liquids before and after using the drop board.

Area sample taken	Without drop board		With drop board	
	No. of exam.	Avg no. of eggs (no./100 ml)	No. of exam.	Avg no. of eggs (no./100 ml)
Intake	4	64999	31	24066
Tank bottom	2	40500	29	17545
Outlet bottom	4	39666	31	13644
Applied fecal liquid	4	12963	31	416
(%) Reduction of parasitic eggs in the applied fecal liquid compared with the intake fluid:	80.0		98.23	

Table 17. Longevity of parasitic eggs inside the biogas plant in winter.[a]

No. of days after commencement of expt	No. of schistosome eggs in night soil	Hookworm isolation		Ascarid eggs	
		No. in each 10-g sample	Reduction (%)	Alive (%)	Dead (%)
Before expt:	20+	789		96.5	3.5
10	5+	276	65.1	67.8	32.2
20	5+	184	76.7		
30	5+	8			
37	5+				
40	(no discovery from	52	93.4	65	35
50	40-43 days)	12		70	30
60		44	94.4	79.3	20.7
70		3	99.6	63	37
75		0	100	65	35
80		4	99.5	69	31
85		0	100	72	28
90		3	99.6	68	32
95		4	99.5	66	34
100		0	100	47.1	52.9

[a]Dates of experiment: 25 January to 4 May 1972. Temperature: air, 1-20 °C; tank, 9-18 °C. Average concentration of ammonia: 0.19 g/100 ml.

Table 18. The concentrations of ammonia and the longevity of schistosome eggs resulting from different proportions of organic materials in the fecal liquids.[a]

% of feces, urine, & grass in the fecal liquid	No. of expt	Avg ammonia conc. (g/100 ml)	Avg life span of the schistosome eggs (*days*)
30	1	0.09	13
50	2	0.13	13.5
70	3	0.14	11.6
80	1	0.15	10
90	1	0.16	7
100	3	0.17	5

[a]The proportions of night soil, pig feces, urine, and grass (all taken from the village pit privies) were pig feces and urine 90%, human excreta and urine 5%, and grass 5%. Room temperature during the experiment ranged from 23 to 28 °C.

The Drop Board's Effect on Schistosome Egg Distribution

Before and after placing the removable drop board in a 10.22 m^3-capacity biogas plant at the Mien Chu Ching Tao public society, 360 kg of night soil were collected every 5 days from the public village privy (which proved to contain schistosome eggs) and were put into the intake chamber. The next day the fecal liquid was withdrawn from the inlet and the applied fecal liquid from its tank for examination of the schistosome eggs. Experimental results before the drop board was used revealed the presence of schistosome flukes in the fecal liquid of the inlet four times out of six. After the drop board was installed, three sets of examinations were carried out in both the intake and applied fecal liquids, and flukes were found each time in the intake chamber and not once in the applied fecal liquid.

Ammonia Concentration and the Longevity of Schistosome Eggs

Into several 10-litre filter flasks glass tubes should be inserted through the centre of the stopper right to the bottom of the flask. The tube should be connected at the neck of the flask to a gelatine capsule for biogas collection. The proportions of night soil, animal feces, urine, and crop stalks in the fecal liquid should range from 30 to 100%, the rest being water. Seven litres should be put into each flask and left fully enclosed to ferment and produce biogas. After biogas production begins, 2-3 litres of night soil sediment containing the schistosome eggs should be added through the sampling tube. Then the fecal liquid should be withdrawn from the bottom of the flask at fixed time intervals so that the schistosome flukes, the ammonia concentrations, and the conditions of biogas production can be observed. The percentage of feces, urine, and grass in the fecal liquid, the ammonia concentration changes (g / 100 ml), and the dying-off time of the schistosome eggs during several experiments are given in Table 18.

Hookworm Egg Count and Distribution

A 200-ml sample should be taken from each of the intake, tank bottom, and outlet bottom, together with 1000 ml of applied fecal liquid (calculated as settled for 1 h and concentrated about 10 times fecal liquid sediments). Each sample is then mixed with sand and soil, incubated, and isolated for a count of hookworms.

The hookworm incubation and isolation rates were the highest (87.09%) in the intake fecal liquid where the average number of hookworms was also high (168.8 / 200 ml); the rates and numbers were lower in the tank bottom and outlet bottom and lowest in the applied fecal liquid (isolation rate 22.58% and number of hookworms 0.8 / 200 ml) (Table 19).

Ascarid Egg Count and Distribution

The ascarid eggs should be collected in the fecal liquids from different parts of the biogas plant, placed in a test tube filled with 1 ml of water, and

incubated at 25-28 °C. They should then be examined under a microscope and the number of eggs that have survived or died should be counted to determine their growth rate and mortality.

The number of viable ascarid eggs was highest in the fecal liquid of the intake chambers; viability was reduced in the fecal liquids of the tank bottom and the outlet bottom, and reduced remarkably in the applied fecal liquid (Table 20).

Table 19. Hookworm isolation in various areas in the fecal liquid.[a]

Area sample taken	No. of exam.	No. of hookworm isolations (%)		Total no. of hookworms	Avg no. of hookworms
Intake chamber	31	27	(87.09)	4568	168.8
Tank bottom	22	13	(59.09)	810	70
Outlet bottom	30	16	(53.33)	448	28
Applied fecal liquid	31	7	(22.58)	6	0.8

[a]Volume of sample: 200 ml. The sample of the applied fecal liquid was 1000 ml during the examination but only 200 ml were used in the calculations to facilitate the comparisons.

Table 20. The growth rate of ascarid eggs in various areas in the fecal liquids.

Area sample taken	No. of exam.	Total no. of ascarid eggs under observation	Alive		Dead	
			No. of eggs	(%)	No. of eggs	(%)
Intake	22	1596	1086	68.04	510	31.96
Tank bottom	16	957	632	66.06	325	33.94
Outlet bottom	22	1137	732	64.3	405	35.7
Applied fecal liquid	18	1173	710	60.5	463	39.5

Bacteria Viability

E. coli

Samples should be taken from both the intake fecal liquid and the applied fecal liquid of the biogas plant, and after a series of dilutions, the MacCorkey liquid media can be used for incubation and then the *E. coli* index can be determined.

Three biogas plants were investigated twice each. The average *E. coli* index in the intake fecal liquid was 1218 billion, and in the applied fecal liquid was 0.7 billion; a remarkable decrease in the applied fecal liquid was evident (Table 21).

Enteric Pathogens

In a 1-litre filter flask, 1 ml of bacterial seed containing 10 billion shigella dysenteric or paratyphoid B pathogens should be mixed with different proportions of the filtered fecal liquid (7.5 openings / cm^2 filter) from the biogas plant to a total volume of about 300 or 400 ml and then the flask should be sealed tightly with a stopper. Two glass tubes should then be put through the stopper, one right into the fecal liquid for sampling and the other into the

Table 21. *E. coli* counts.[a]

Plant	No. of exam.	*E. coli* count (avg no./litre)	
		Intake fecal liquid	Applied fecal liquid
		billion	*million*
Lee x x	2	5.76	25.0
Pong x x	2	127.94	137.5
Sixth of the Seven Teams	2	231.95	68.16
Avg of three plants		121.88	76.85

[a]Date of examination: March 1972. Temperature: air, 13-17 °C; tank, 12-16 °C. Ammonia concentration: 0.12-0.17 g/100 ml.

top of the flask for withdrawing the biogas. The short tube of the filter flask should be connected to the gas transporting hose of the biogas plant. Then the filter flask should be set in a bamboo basket and sunk with weights to the bottom of the outlet chamber of the biogas plant. Samples should be taken at fixed time intervals after the bacterial seed is mixed with the fecal liquid and introduced into the biogas plant. The pathogens should be isolated after enrichment and distinguished by primary biochemical reaction and conglomeration experiments. The pathogens are considered dead if no pathogens are isolated in three tests. To the same bacterial seed either the filtered fecal liquid from the biogas plant or cool boiled water can be added, and the flask can be placed inside a room for comparison, and be sampled at fixed time intervals with the same methods described above to test the viability of the pathogens.

Shigella

The shigella bacillary dysentery pathogens survived 93 days in the cool boiled water and 17 days in the ordinary fecal liquid but could not be isolated after being placed in an environment similar to that of the biogas plant for 30 h (Table 22).

Bacillus Paratyphoid B

This survived for 98 days in cool boiled water, 41 days in ordinary fecal liquids, and 44 days in an environment similar to that of the biogas plant (Table 23).

Spirochetes

The spirochetes such as tularemia, hemorrhagic jaundice (*Leptospira icterohaemorrhagica*), autumn fever, and seven-day fever should be mixed with the Koch medium cultures of about 20-30 ml, and placed in small 100-ml flasks with tight-fitting stoppers and connected to the top portion of the flask with the tube transporting gas from the biogas plant, keeping the biogas pressure between 20 and 40 cm of water in the pressure gauge column. Samples should be taken at fixed time intervals after the introduction of the biogas, and a microscope used to examine the condition of the spirochetes. A sample of the same bacterial seed should then be placed in a test tube and left in a room for comparison, and the same method used to study the spirochetes at fixed time intervals.

After four experiments, the microscopic observation showed that the spirochetes died out within 29.5-31 h after the introduction of biogas, whereas the spirochetes in the comparison group only died out after 101-308 h (Table 24).

Table 22. Viability of bacillary dysentery pathogens.[a]

Ratio of bacterial liquid (seed) to fecal liquid	Results of isolation after enrichment
	Experimental group
1:18.4	Immediate: negative
1:17.5	Immediate: negative
1:1	Immediate: positive; 24 h: negative
Purely seed	Immediate, 6 h: positive; 30 h: negative
	Control group
1:7	17 days: positive 18 days: negative
(Seed: cool boiled water) 1:7	93 days: positive 95 days: negative

[a]Date of experiment: 5 April-12 July 1972. Temperature: air, 15.5-28 °C; room, 11.5-28 °C; tank, 14-24 °C. pH values: seed and excreta mixture, 7-8; seed and cool boiled water mixture, 6.8-7.5.

Table 23. Life span of bacillus paratyphoid B.[a]

Mix ratio of bacterial liquid (seed) and fecal liquid	Results of isolation after enrichment (no. of days)
	Experimental group
1:10	44: positive 47: negative
1:1	44: positive 47: negative
	Control group
1:10 (Seed: cool boiled water) 1:16.6	41: positive 43: negative 98: positive 103: negative

[a]Date of experiment: 27 April-10 August 1972. Temperature: air, 20.5-28 °C; room, 17-27.5 °C; tank, 19-23 °C. pH value: liquid mixture of seed and feces: 7.8-8; liquid mixture of seed and cool boiled water: 7-7.5.

Summary of Research Results

More than 40 investigations have been conducted in 19 operating biogas plants. A comparison of the applied fecal liquid with the intake fecal liquid showed that the total number of parasite eggs was reduced by 93.6%, the average number of hookworms was reduced by 99%, no schistosome flukes were found, and the number of dead ascarid eggs was high; in the applied fecal liquid both the total number of parasite eggs and of surviving parasite eggs was considerably lower than in the intake liquid. Tests showed that the parasite eggs in the biogas plant could survive for 14 and 37 days in autumn and winter,

172

respectively. In winter 90% of hookworm eggs died off in 30 days, and the mortality of the ascarid eggs increased remarkably in 100 days. Experiments on the viability of the bacteria have proved that the *E. coli* index was much lower in the applied fecal liquid than in the intake fecal liquid; in an environment similar to the biogas fermentation tank the shigella bacillus died out in 30 h, the spirochetes within 29.5-31 h, and the bacillus paratyphoid B in 44 days. After fermenting in the biogas plant the fecal liquid containing half night soil, animal (mostly pig) feces, urine, grass, and half water, had an ammonia nitrogen concentration higher in the applied fecal liquid than in the intake area by 7.7%, and by 40% over the level in the untreated pig feces and urine.

Table 24. Viability of spirochetes.

	Results of microscopic observation (alive (A) or dead (D)/no. of hours following introduction of biogas)					
	1st test	2nd test	3rd test	4th test	5th test	6th test
1st sample	A/4.5	A/21.5	D/29.5	D/46		
2nd sample	A/4.5	A/21.5	D/29.5	D/46		
Control	A/4.5	A/21.5	A/29.5	A/46	A/51	
3rd sample	A/4	A/24	D/31	D/54	D/101	
Control	A/4	A/24	A/31	A/54	D/101	
4th sample	A/4	A/24	D/31	D/54	D/101	
Control	A/4	A/24	A/31	A/54	A/101	D/408

Note: In the 1st, 2nd, and comparison tests, tularemia, autumn fever, seven-day fever, *Spirochaetosis icterohaemorrhagica*, and Koch medium mixed cultures were used. In the 3rd, 4th, and comparison tests *Spirochaetosis icterohaemorrhagica* and Koch medium culture were used. Room temperatures during experiments were in the 23-28 °C range, and the pH value was 7.0–7.5. The 1st and 2nd tests were begun at 12:20 p.m. on 27 June 1972, and the 3rd and 4th tests at 10:30 a.m. on 25 June 1972.

Settling Out of Worms and Eggs

For several reasons the settling rate of parasite eggs is high in the biogas plant. It is relatively deep (about 3 m), the fecal liquid is more dilute than human and animal feces and urine (specific gravity: 1.005), and the fecal lumps decompose after fermenting in the biogas plant. As a result, 79.7% of the parasite eggs were able to settle down to the bottom of the tank, 17.6% remained in the middle layer, and only 2.7% were left in the top metre of fecal liquid.

Mortality of Parasite Eggs

All the parasite eggs settled on the tank floor were dead by the time the tank was desludged. Although many parasite eggs were present there, it was generally only the upper layer of fecal liquid in the outlet chamber that was removed for use as fertilizer. Normally, replacement of the input materials or reparation of the tank is carried out annually, and all the fecal liquid and sludge or sediments should be removed then. According to our experiments and previous reports, all the schistosome and hookworm parasitic eggs died out within 3 months in both summer and winter. In addition, when chemicals such as caustic lime, "666" powder, ammonia water, urea, and lime were used in the desludging, those parasitic eggs that had settled recently and were still alive were all killed.

The anaerobic environment does not favour the growth of aerobic bacteria. As large amounts of organic matter decompose in a fermentation tank, they consume large quantities of oxygen, and the tank fills up with biogas very quickly. According to the analysis done by the chemistry department of the Chungking University the biogas produced by local methods contained 72-76% methane (CH_4), 22-24% carbon dioxide (CO_2), and only 1-3% of oxygen (O_2). Basically, the environment is anaerobic and therefore aerobic bacteria such as shigella and spirochetes quickly die off.

Increased Ammonia Concentration

To determine the ammonia nitrogen level, samples from four parts of the biogas plant should be collected. The simple method of ammonia determination can be used to find the concentration of the ammonia nitrogen in the pit privies where night soil and pig feces and urine are collected for comparison.

Results have shown that after the feces, urine, and grass have fermented in the biogas plant, the concentrations of ammonia nitrogen of the fecal liquids in the tank bottom, outlet bottom, and the applied fecal liquid are higher than in the intake chamber (Table 25). The level is also higher in the applied fecal liquid than in the intake area by 7.7%, and by 40% over the level in untreated pig feces and urine. The concentration of ammonia nitrogen in the night soil and urine was 0.20 g / 100 ml in the fully enclosed three-pit privy.

The ammonia content of the fecal liquid in the biogas plant was 40% higher after fermentation than in the untreated pig feces and urine. This factor would accelerate the death of both the parasite eggs and pathogens.

Table 25. Comparison of the ammonia nitrogen (NH_3-N) concentrations in various parts of the plant and in the fecal liquid in the privies and pigpens.

	Fecal liquid from the biogas plant		Fecal liquid from the pigpen		Night soil and urine from the enclosed privy	
Area sample taken	No. of exam.	Avg NH_3-N conc. (g/100 ml)	No. of exam.	Avg NH_3-N conc. (g/100 ml)	No. of exam.	Avg NH_3-N conc. (g/100 ml)
Intake	39	0.13				
Tank bottom	31	0.14	10	0.10	10	0.20
Outlet bottom	39	0.14				
Applied fecal liquid	40	0.14				

Factors that Affect the Efficiency of the Biogas Plant in Treating the Excreta

Tank Shape

Most of the biogas plants are fully enclosed with pressure rising and falling automatically as biogas is produced and used. Generally the length, width, and depth of the fermentation tanks are 3-5 m, 1.5-2 m, and 3 m, respectively, with a capacity of 10-20 m^3. Most of the doors between the fermentation tank and the outlet chamber are as wide as the fermentation

174

tank. Some tanks have been modified by connecting the inlet chamber directly to the privies and pig- and ox pens. Most of the doors between the fermentation tanks and the outlet chambers in the biogas plants in the district of Mien Chu are only half as wide as the fermentation tank; in other places applied excreta tanks have been constructed adjacent to the outlet chambers, and removable drop boards have been installed across the doors (as described above).

The problems related to the shape of the tank that affect the efficiency of the biogas plant in treating the excreta are the size of the door connecting the fermentation tank with the outlet chamber and the design and arrangement of the outlet chamber and the intake area. Prior to the modification of the biogas plant, the width of the door was the same as that of the fermentation tank, and the intake chamber was directly opposite the outlet chamber. In this type of tank, when the fecal liquid was flowing or when new materials were fed in, much of the fecal sediment would flow into the outlet chamber and the parasitic eggs floated up with the fecal sludge in the applied fecal liquid, so that parasite eggs in the applied fecal liquid could not be reduced by more than 80%. In the modified biogas plant, the width of the door is only half the width of the fermentation tank and its height half of the depth of the tank.

In some other tanks where fewer parasite eggs were found in the middle and upper layers of the fecal liquid, the applied excreta tank was constructed adjacent to the outlet chamber or a removable 1-m high drop board was installed over the door (Fig. 57) so that only the middle and upper layers of fecal liquid could flow into the applied excreta tank or outlet chamber and then be removed for use. Some even constructed the intake chamber at the side of the biogas plant (Fig. 58) to keep the fecal sludge from flowing into the outlet chamber: there the parasitic eggs in the applied fecal liquid were reduced by a remarkable 98.23%. Experiments on the viability of the schistosome eggs before and after the modification of the plant show that after adding the drop board, the flukes and eggs were even more efficiently removed.

Proportions of Organic Materials Used in the Biogas Plant

About 40-50% of the biogas plants use mostly night soil, animal (mainly pig) feces and urine, and some crop stalks. Others use 10% or less of night soil and animal feces and urine and a higher proportion (15%) of crop stalks. These materials are then mixed with 50-70% of water. In some areas because of a shortage of feces and urine or because of accumulated rainwater, the fecal liquid became very dilute and larval growth increased. The pH value of the fecal liquid ranged between 6 and 8.

Biogas production increases with the proportion of night soil, poultry feces, urine, and grass in the plant's feed material. Therefore, efforts could be directed to reducing the size of the tank, and increasing the night soil, poultry feces, urine, and grass to suitable proportions. Also, work needs to be done to find an easier way to construct tanks at lower capital cost without adversely affecting biogas and fertilizer production while still treating large amounts of excreta.

Green grass, crop stalks, and leaves are among the raw materials fermented to produce biogas. One biogas plant with a 10 m^3 capacity in the Chung Chiang area would require 1800-3000 kg of green grass each year. After fermenting in the biogas plant, it produces large amounts of both biogas and fertilizer.

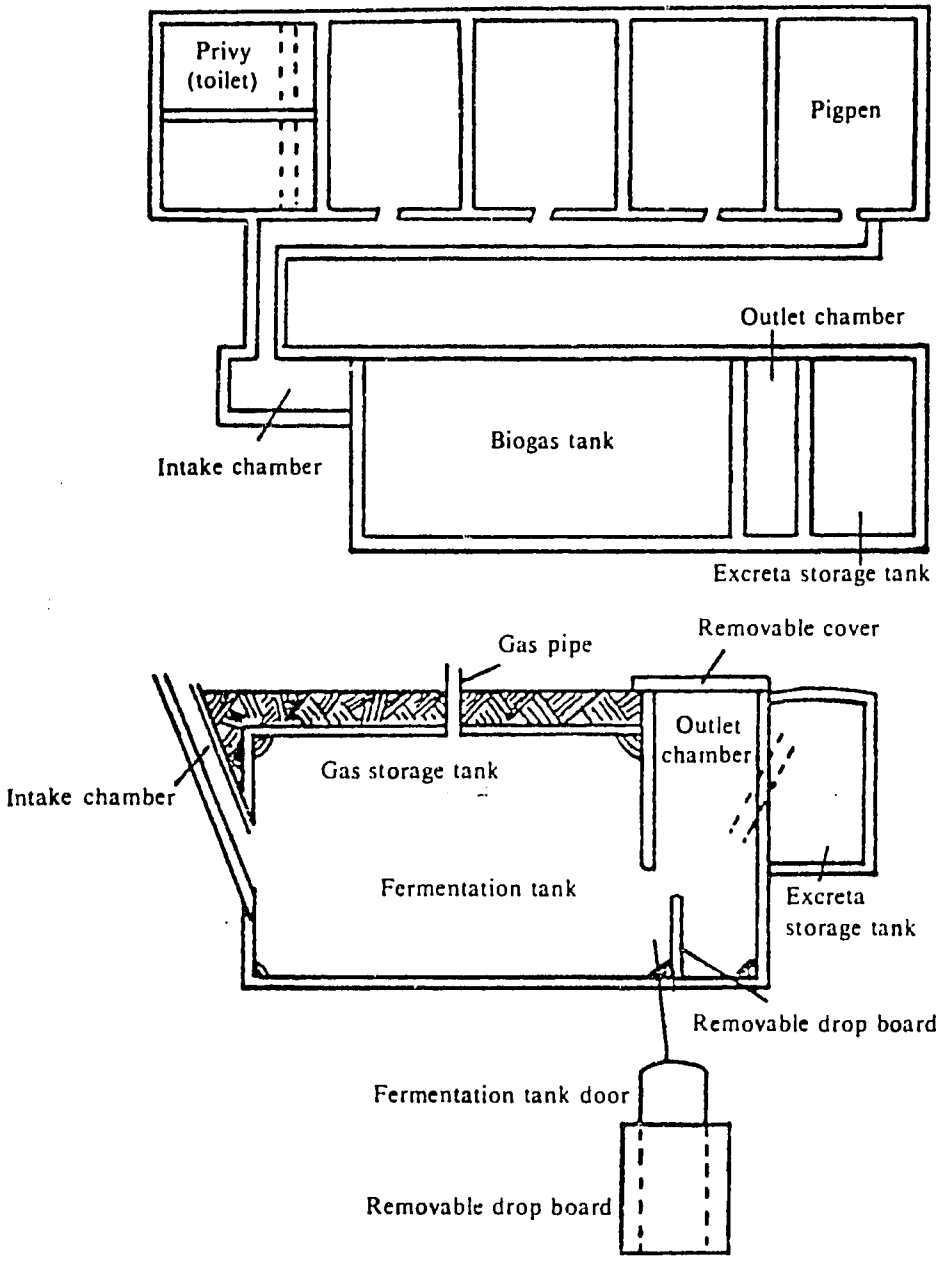

Fig. 57. Pigpen and privy biogas tank (rectangular).

Problems with Excreta Treatment in the Biogas Plant

The ability of the biogas plant to kill the bacteria and destroy parasite eggs must still be increased. The tank's temperature is not high (10-24 °C). Although the ammonia concentration of the fecal liquid is high, it does not yet

reach the concentration that could kill and destroy the worms and eggs quickly, and therefore the parasitic eggs in the biogas plant die off more slowly than in an enclosed tank of night soil and urine. The facultative bacteria such as paratyphoid B and *E. coli* can still survive longer. These are the weaknesses of the biogas plant treatment of excreta, and further research should be carried out on them.

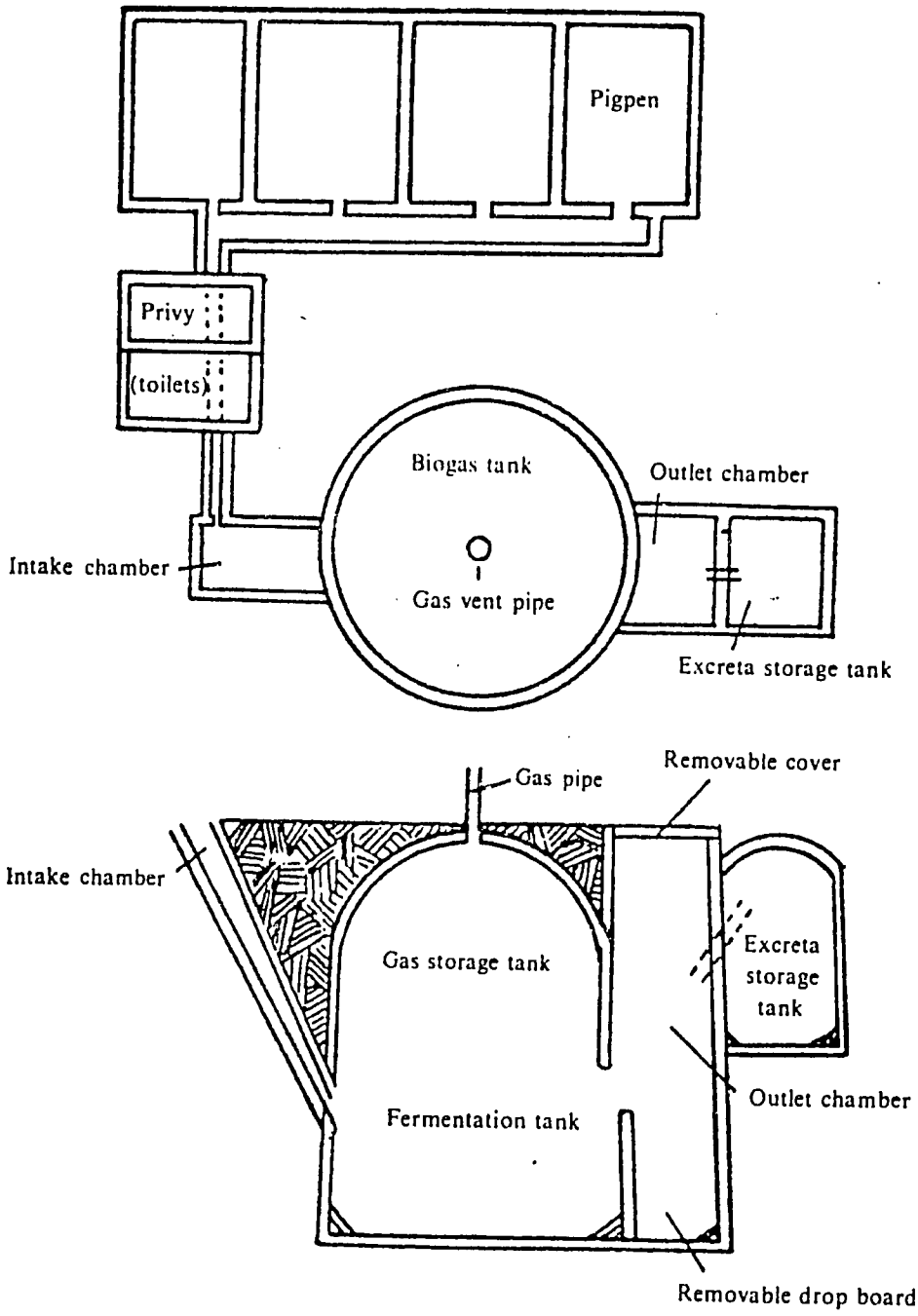

Fig. 58. Connected pigpen and privy biogas tank.

The effects of the flow of the fecal liquid inside the tank on the efficiency of the sedimentation of the parasitic eggs need to be further researched to improve the size of the tank and the efficiency of settling and removing the eggs.

Research on how to increase the biogas production and the efficiency of the fertilizer and on practical problems of biogas production and fertilizer formation is still needed.

Advantages of Excreta Treatment in the Biogas Plant

Worms and eggs are effectively removed by settling and pathogens are effectively destroyed. Advantageous conditions are created for the overall management of excreta disposal. All the night soil and poultry feces and urine can be put into it for treatment, thus reducing the number of open-air human and poultry pit privies. The result has been an improvement in public health standards.

Biogas can be used for cooking rice and animal feed and provides an efficient way to solve the brushwood shortage in the villages, also saving the labour required to collect and transport the brushwood, which can instead be diverted to agricultural production. In addition biogas production provides a large amount of fertilizer for use in agricultural production.

APPENDIX 11: GAS SCRUBBING

Treatment to eliminate undesired gas components

Some users of biogas in engines claim that it is necessary to clean the hydrogen sulphide (H_2S) out of the gas before using it. It is essential to clean it of H_2S and carbon dioxide (CO_2) if the gas is to be bottled. Biogas used for cooking or lighting does not need to be cleaned.

(a) **Removing H_2S**

Iron filings may be used to absorb H_2S. It is not easy to calculate the absorption capacity of iron filings as they get a sticky sludge on the surface from the action of the H_2S, which prevents the gas getting at the filings on the inside. Once this sludge has formed on the whole surface it is time to replace the filings. In one experiment in running a petrol engine the gas passes through a 200 litre drum full of iron filings, which is replaced every six months. Iron filings or ferric oxide (rust) of about 2.5 kg will absorb 1 m^3 of H_2S, i.e., will clean 100 m^3 of biogas assuming it contains no more than 1 per cent H_2S.

(b) Removing CO_2

CO_2 is usually removed by bubbling the gas through lime water. Lime water is a mixture of 1.8 kg burnt lime in 1,000 litres of water. One thousand litres of lime water will remove 560 litres of CO_2. Therefore assuming there is 35 per cent CO_2 in the biogas, 625 litres of lime water will be needed to purify 1 m^3 biogas. Lime water becomes a milky colour as it absorbs CO_2 and then it starts clearing a little again as it becomes saturated. This shows when it needs to be replaced.

These figures illustrate the fact that large amounts of lime water are required for removing CO_2. The lime sludge which comes out of the solution can be removed, if it is given time to settle. The water can then be re-used with fresh burnt lime. The dried lime sludge sometimes has a commercial value to chemical industries. Sodium hydroxide (NaOH) mixed in water also absorbs CO_2. It requires much less water but is not so easily available and is more expensive. Eleven and a half kg NaOH is mixed with 1,000 litres water and this will absorb 3,200 litres of CO_2.

Assuming there is 35 per cent CO_2 in the biogas, 1 m^3 biogas requires only 11 litres of solution for purification.

Sodium hydroxide is caustic and can cause burns to the skin. Great care must be taken when handling it.

(From Guidebook on Biogas Development, ESCAP, 1981, pgs. 82-83)

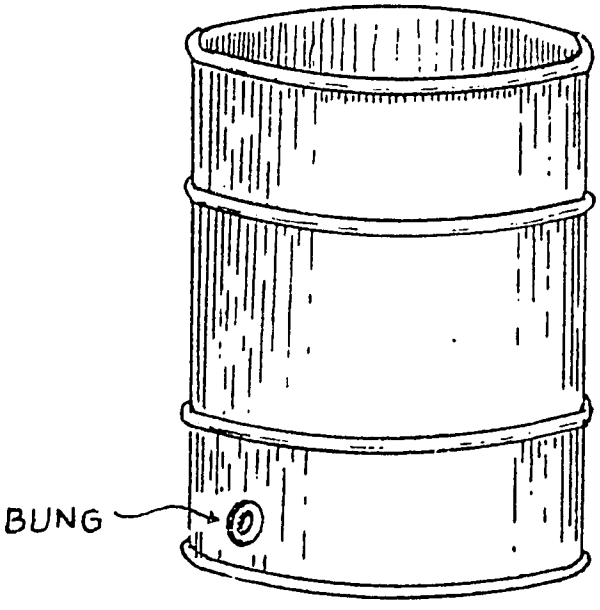

As stated above, a simple filter to remove hydrogen sulfide can be made from a 55 gallon drum. The best type of drum is one with a small hole in the bottom, as shown to the left, which can be easily adapted to allow gas to enter through the bottom and out the top(or vice versa). It's a good idea to place 'removable' shelves in the drum, made of fine wire mesh(similar to sand filters), which stack one on top of each other. The iron filings or rust would rest on top of the shelves and gas would percolate through the filter. The shelves could then be easily removed when the filings or rust need replenishing.

Filters to remove carbon dioxide can be made from any available materials. Biogas bubbles through the lime water, the carbon dioxide being precipitated as calcium carbonate. Large glass/plastic jars, metal cans or cylinders, or clay pots are examples of locally available materials that can be used as containers to hold the lime water. If the decision is made to filter the gas, it's best to remove the carbon dioxide first, since it constitutes 30-35% of biogas by volume. This will greatly reduce the amount of gas flowing through the gas distribution system, allow other filters/pipes to be designed for a lesser gas volume, and concentrate to a greater extent the other contaminants such as hydrogen sulfide.