PV PA 191 GD
3006

TECHNOECONOMIC AND FEASIBILITY STUDIES FOR LOW-COST TELEVISION SYSTEMS ADAPTED FOR USE IN LESS-DEVELOPED COUNTRIES

E. A. Eschbach
R. S. Campbell
W. N. Parker
R. J. Littlefield
F. M. Cuta
C. J. Hostick
J. F. Williford

June 1984

Prepared for
the National Telecommunications
and Information Administration,
U.S. Department of Commerce
under Contract 2311104928

Battelle
Pacific Northwest Laboratories
Richland, Washington 99352

ACKNOWLEDGMENTS

This project has been conducted with the encouragement of Mr. Robert F. Schenkkan of the U.S. Agency for International Development (AID) Office of Education. His support has been invaluable in beginning this work.

We are also most grateful to staff at the National Telecommunications and Information Administration, which has served as the executing agency for the government. Mr. Ray Jennings and Mr. Larry Gatterer were most helpful in developing workplan revisions, and Mr. Gatterer, who has served as Technical Monitor, has been uncommonly responsive to the needs of the investigators and the interest of AID.

Battelle investigators are most appreciative of the exchange of ideas and visits to manufacturing operations arranged by Mr. Chris Curtin and Mr. Larry Karnosh of Tektronix. Their thoughts and our observations of their manufacturing operations helped give depth to sections of the report dealing with LDC fabrication of picture tubes.

We are also grateful to Battelle staff who contributed greatly to the project: D. J. Lettau, S. B. Thompson, and J. C. Draper, who helped with many creative ideas and details of circuitry modifications; and L. O. Levine, who did the patent analysis. G. E. Felton was helpful in tracking down details on currently available receivers.

P. L. Whiting provided technical editing and final preparation of the present report.

SUMMARY

This work has focused attention on the prospect of substantially reducing costs of black-and-white television receivers for use in less-developed countries (LDCs). It has been supported by the U.S. Agency for International Development (AID), and monitored by the National Telecommunications and Information Administration (NTIA). The premise of this study is that substantial reductions in costs for television receivers would lead to larger numbers of sets in use in LDCs, expanding opportunities for messages on maternal and child health, sanitation and clean water, agriculture and food preservation, and a range of other beneficial topics.

Methodology of the study has been to combine insights of senior researchers who were involved in the original development of television in the United States with those of younger researchers engaged in the development of newer kinds of electronics. The process has been moderated by a project leader who has experience in the development and transfer of other types of technology to LDCs. The basic orientation has been as follows:

- reassessment of the principles of television broadcasting and receiver design
- appraisal of current trends now operating in commercial design and manufacture of television receivers
- a value engineering approach, wherein cost elements of current technology are examined and prospects for cost reduction are identified
- a review of technologies needed for picture tube fabrication, looking toward LDC manufacture of these components.

Key pathways toward cost reduction have been identified, and operating models have been prepared to show a single-channel receiver with minimal electronics, and to illustrate the attainable quality with largely hand-built picture tubes.

Our main conclusions may be summarized as follows:

- Costs of electronics may be minimized by fully using newest developments in very large-scale integrated circuits (VLSI), and by limiting receivers to a single channel.
- Since picture tubes and cases comprise about half the cost of television receivers, LDC manufacture of these parts along with assembly of receiver electronics is needed to fully realize possible savings.

These measures can be taken without losing compatibility with existing standardized television broadcasting. This path is accordingly evolutionary, rather than revolutionary, and the main effort needed in the future is one of technology transfer to the LDCs.

It should be noted that the pathways we have identified, both in terms of full use of advanced solid-state electronics and of using LDC labor for assembly, are representative of paths taken earlier by the Japanese in fostering electronic industries in South Korea, Taiwan, and Hong Kong (a process more recently extended to Singapore and Malaysia).

An LDC electronics industry can build gradually, beginning with assembly of imported components, gradually replacing these with indigenously made parts as infrastructure develops. Assuming a mixture of some locally made electronics and hardware with imported integrated circuits and some picture tube parts to begin with, projected manufacturing costs for LDC-made, simplified television receivers would lie in the following range:

Electronics.....	$ 6 to 7
Picture tube.....	4 to 5
Case.....	0.8 to 1
TOTAL.....	$10.8 to 13

This represents a reduction of 40% to 50% as compared to sets now made in Japan or Taiwan, which are estimated to cost about $25 (in 1984 dollars) for components. Reductions on this order are justified by our cost analysis, and are subject to some further reductions as technology is picked up in the LDCs.

The reported work does include some analysis of additional, theoretical benefits that may be derived by departing from standardized television broadcasting. However, the limited availability of sophisticated integrated circuits means that, in a practical sense, it is less expensive to stay with conventional television at the present time. Some work is included in the report to illustrate the effect of bandwidth reductions (and reduced numbers of lines in the picture) on picture quality. A special video tape, illustrating these effects over a range of 120 to 480 lines has been prepared and supplied to NTIA and AID. However, we do not recommend that such departures from standardized broadcasting be pursued at the present time.

Questions of power for television receivers are continually raised, particularly in the context of rural LDC users. We have not been able to identify a fully satisfactory answer to LDC energy supplies, but have used a minimal power criterion as an important factor in assigning value to receiver design approaches. For this reason, we have favored a comparatively small picture tube (5 to 7 in. diagonal), using either a large length-to-diameter ratio magnetically deflected design or an electrostatically deflected design to minimize power demands. It is clear that television receivers of this type can be operated at power levels 1/10 that of an ordinary light bulb; i.e., about 4 to 6 watts.

We recommend that the next phase of this work include an assessment of infrastructure in key countries of interest to AID, seeking an understanding of best candidate countries and their needs for specific types of technical assistance. Key technologies, in addition to electronic assembly, would include glass technology and ability to do high-vacuum work and to perform a variety of metallurgical operations. Secondary choices such as case materials and manufacturing techniques can be made on the basis of materials available indigenously and on existing manufacturing capabilities.

At present, it would appear most cost-effective to confine attention to receivers, which are needed in large numbers. As special needs of rural area broadcasting become clearer, it may be useful to re-examine ways to reduce costs of low-power transmitters and relay stations.

Reductions in receiver cost have been identified, and are closely tied to existing technology. Costs are conservatively estimated, and major needs are for technology transfer to LDCs, centered on simplified designs. The technical changes are perhaps less important than substitution of indigenous manufacture, with elimination of substantial added costs from importation duties now imposed on such products in most LDCs.

CONTENTS

ACKNOWLEDGMENTS iii

SUMMARY v

1.0 INTRODUCTION 1.1

2.0 RECEIVER DESIGN AND VALUE ENGINEERING--STAYING WITH THE CURRENT TELEVISION FORMAT 2.1

2.1 CURRENT TECHNOLOGY USED IN TELEVISION SYSTEMS 2.1

2.1.1 Signal Format 2.1

2.1.2 Television Receiver Circuitry and Components 2.3

2.1.3 Trends in Semiconductor Technology 2.6

2.1.4 The Trend Toward the One-Chip TV 2.8

2.2 COST ANALYSIS OF TELEVISION RECEIVERS 2.11

2.2.1 Cost Breakdowns of Representative Sets 2.12

2.2.2 Estimate of Standard TV Manufacturing Costs 2.14

2.2.3 Potential Cost Reduction Through Design Simplification 2.13

2.3 COVERAGE AND DISTRIBUTION CONSIDERATIONS 2.17

2.3.1 Receiver Sensitivity and Noise 2.17

2.3.2 Geographic and Geometric Effects on Signal Strength 2.19

2.3.3 Distribution Systems 2.21

2.4 GUIDELINES FOR DEVELOPMENT OF A LOW-COST RECEIVER 2.27

2.4.1 Circuitry and Signal Processing Considerations 2.27

2.4.2 Magnetic Versus Electrostatic Deflection 2.28

2.4.3 Electrostatic Deflection and the One-Chip TV 2.30

2.4.4 Design of the Power Supply 2.32

2.4.5 Two Designs for a Single-Channel Receiver..... 2.32

2.4.6 Conclusions..... 2.33

3.0 CONSIDERATIONS FOR MANUFACTURE IN LESS-DEVELOPED COUNTRIES..... 3.1

3.1 FUNDAMENTAL CONSIDERATIONS FOR CRT MANUFACTURE..... 3.1

3.1.1 Phosphors, Coating Processes, and Aluminizing..... 3.1

3.1.2 Final Electron Lens..... 3.3

3.1.3 Stem and Electron Gun..... 3.6

3.1.4 Final Assembly of CRTs and Subsequent Processes..... 3.9

3.1.5 Additional Considerations..... 3.11

3.2 SPECIFIC DESIGN POSSIBILITIES FOR LDC MANUFACTURE..... 3.12

3.2.1 Assembled Glass Envelopes..... 3.13

3.2.2 Blown-Glass Envelopes..... 3.14

3.2.3 Cylindrical Metal Envelopes..... 3.16

3.2.4 Conventional Funnel Shapes in Metal..... 3.18

3.2.5 Conclusions..... 3.20

4.0 INVESTIGATION OF NONSTANDARD FORMATS: BANDWIDTH REDUCTION..... 4.1

4.1 IMPLICATIONS OF BANDWIDTH CHANGES..... 4.1

4.2 IMPACT OF CIRCUIT EVOLUTION ON POSSIBLE COST SAVINGS..... 4.2

4.3 TECHNIQUES FOR REDUCING BANDWIDTH REQUIREMENTS..... 4.2

4.4 EFFECTS OF REDUCED BANDWIDTH ON IMAGE QUALITY..... 4.5

5.0 TECHNOLOGIC DEVELOPMENTS THAT MAY AFFECT COSTS..... 5.1

5.1 GENERAL TRENDS IN CIRCUITRY AND ELECTRONIC DEVICES..... 5.1

5.2 CRTs AND THEIR ALTERNATIVES..... 5.1

5.2.1 Patent Analysis..... 5.2

6.0 CONCLUSIONS AND RECOMMENDATIONS..... 6.1

7.0 REFERENCES..... 7.1

APPENDIX A - SPECIFICATIONS OF CURRENTLY AVAILABLE HIGH-SCALE INTEGRATED CIRCUITS FOR USE IN MONOCHROME TV RECEIVERS..... A.1

APPENDIX B - INSTRUCTIONS FOR OPERATING THE PROTOTYPE LOW-COST TV SYSTEM..... B.1

FIGURES

1 Block Diagram of a Monochrome Receiver..... 2.2

2 Average List Price of Small Monochrome Receivers..... 2.10

3 Average List Price of Small Monochrome Receivers..... 2.10

4 Cascaded VHF Translator System to Reach Clusters of Villages from a Satellite Receiver..... 2.25

5 Mountaintop Transmitter with Translators Serving Clusters of Villages..... 2.26

6 Block Diagram of Low-Cost TV System..... 2.34

7 Direct IF Transmission to VLSI Circuit Receiver..... 2.35

8 Receiver Based on Electrostatically Deflected CRT..... 2.37

9 Glass CRT Envelope Assembled from Separate Components..... 3.13

10 Single-Piece, Blown-Glass CRT Envelope..... 3.15

11 Cylindrical, Metal Envelope CRT Designs..... 3.16

12 Metal Funnel CRT Design..... 3.19

13 Standard Monitor and Low-Resolution Camera Setup for Low-Bandwidth Broadcasting..... 4.4

14 Digital Image-Processing Setup for Low-Bandwidth Broadcasting..... 4.4

15 Effect of Reduced Resolution on Image Quality..... 4.6

16 Patent Activity for Electroluminescent Devices..... 5.3

17 Patent Activity for Liquid Crystal Displays, Excluding Chemical Patents..... 5.3

TABLES

1 U.S. and Foreign TV Standards 2.3

2 Level of Integration in Late-Model TV Sets 2.7

3 Cost Breakdown of Typical Black-and-White Set 2.12

4 Comparison of Components Required for IC Sets and Discrete-Component Sets 2.13

5 Estimated Cost to the Manufacturer of Major Monochrome Receiver Components 2.14

6 Components Eliminated by Single-Channel IF Transmission 2.16

7 VHF Transmission Cable Attenuation and Cost Data 2.20

8 Typical TV and Scope CRT Comparison 2.29

9 U.S. Patent Claims for LCDs 5.4

10 U.S. Patent Claims for CRTs 5.5

1.0 INTRODUCTION

This report, which has been supported by the U.S. Agency for International Development (AID) through the National Telecommunications and Information Administration (NTIA), assesses the feasibility of providing lower-cost television receivers for use in less-developed countries (LDCs). Diffusion of the technology for lower-cost monochrome TV receivers into a number of LDCs should produce substantial benefits, including reduction in unit costs to consumers, conservation of foreign exchange, and, through classic processes of technology diffusion in import substitution, diversification and strengthening of LDC economies. Greater availability and affordability of TV receivers, combined with special efforts in programming, would be helpful in transmitting information on health, nutrition, family planning, and agriculture to LDC populations.

The work was originally conceived during the early 1970s. Since then, considerable technological changes have occurred, and the importance of several cultural and economic processes in the LDCs have become more broadly appreciated. Our original proposal was directed toward departures from standardized television broadcasting formats, an approach that seemed promising in terms of simplification of total systems and reduction of costs. Some changes in emphasis, however, have been dictated by the spread of standardized TV systems in many LDCs, and by the burgeoning problems created by high rates of urbanization. At the same time, complementary developments in other technologies, notably the evolution of alternative energy systems for use in rural areas, have not occurred as originally anticipated.

The net result of these and other considerations has been to focus primary attention on the prospects of minimizing costs in TV receivers while maintaining compatibility with standardized TV formats. The consequences of departure from standard format have been investigated, but the minor benefits associated with reduced cost are probably not justified when viewed against imcompatibility with standardized systems of TV broadcasting. Also, although some departures from standard formats yield technical simplifications, they call for special circuits not currently of interest to high-volume manufacturers of integrated circuits. Put simply, sophisticated circuitry made in large volume

is cheaper than simpler circuitry involving larger numbers of components. This study has therefore placed emphasis on value engineering of standard format receivers, maximizing benefits from small design changes and simplifications, adoption of newer developments in integrated circuitry, and possible LDC manufacture.

Details on principles of television broadcasting and on the evolution of circuitry are discussed in Section 2. Section 3 provides information on manufacture of picture tubes and discusses a series of design approaches for these, all directed toward indigenous fabrication of these items in LDCs. Section 4 considers the technology and possible problems associated with use of a non-standard signal format. In Section 5, we have attempted to identify any significant trends, particularly ones that would impact recommended approaches, by consulting a number of technical experts and by reviewing patents.

In accordance with the workplan and terms of the contract, we have prepared items of equipment that demonstrate simplifications in circuitry, use of IF transmission, and options for cathode ray construction and power levels. These items, along with the present final report, are the results of our study on lowered cost for monochrome TV systems.

As will be seen, our findings are evolutionary rather than revolutionary, aiming toward adoption of major trends in integrated circuitry that are already decreasing the costs of electronics and toward combining these advances with cost savings from LDC fabrication of major components and final assembly.

2.0 RECEIVER DESIGN AND VALUE ENGINEERING--STAYING WITH THE CURRENT TELEVISION FORMAT

2.1 CURRENT TECHNOLOGY USED IN TELEVISION SYSTEMS

The standard monochrome (black and white) TV contains the following major subsystems:

- UHF tuner (filtering and frequency translation)
- VHF tuner (same as above, but also provides amplification)
- video intermediate frequency or IF (signal amplification, rejection of noise, and detection of modulated signal)
- sound IF (splitting off, detection of, and amplification of sound)
- video output (splitting off and amp to beam of picture tube)
- sync separation (splitting off of the signals for vertical and horizontal deflection)
- horizontal output driver (amp to deflect beam sideways)
- vertical output driver (amp to deflect beam up and down)
- high-voltage power (provides voltage step-up for beam acceleration)
- power supply for electronic components (low voltage)
- picture tube.

These subsystems are shown in Figure 1 along with approximate signal levels at important junctions. This diagram is primarily functional, and is not an exact representation of the hardware layout.

2.1.1 Signal Format

There are four standard international signal formats for television broadcasting. The one used in the United States consists of a picture with 525 lines presented 30 times a second with 2 to 1 interlacing (interlacing is a method of scanning that simulates 60 frames a second to reduce flicker). The broadcast TV channels are distributed in three frequency bands from 54 to 890 MHz. In the United States, each channel is allotted a bandwidth of 6 MHz,

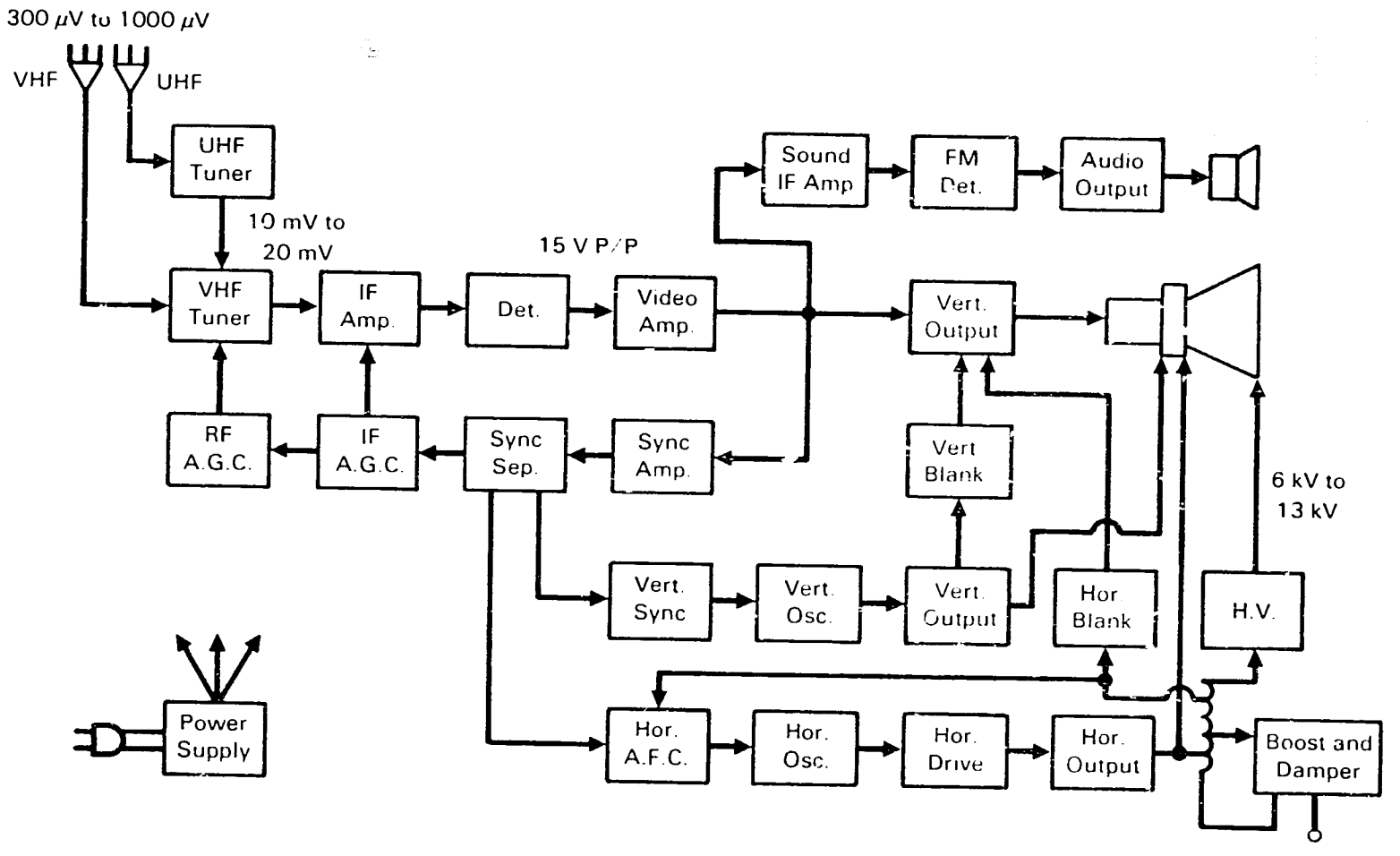

FIGURE 1. Block Diagram of a Monochrome Television Receiver

although only about 4 MHz is effectively used. The bandwidth calculation is shown for the U.S. standard and the results for the other standard formats are shown in Table 1.

$$\text{Bandwidth} = 0.427 \times F \times N^2$$

$$\text{Bandwidth} = 0.427 \times 30 \times 525^2 = 3.528 \text{ MHz}$$

where N is the number of lines per picture and F is the number of pictures per second. The bandwidth is proportional to the square of the number of lines in the picture. Noise and signal strength requirements are a direct function of bandwidth, and their significance will be discussed in Section 2.3.

2.1.2 Television Receiver Circuitry and Components

The UHF and VHF tuners are separate functions in the TV receiver. This separation is necessary because each tuner controls signal reception in a frequency band so far apart from the other that special components and electronic shielding are needed between the two. The tuners must selectively amplify the signal associated with the desired channel, and effectively reject all other frequencies and noise. The incoming signal is at radio frequency (RF) and must be translated down to the intermediate frequency (IF) associated with the next stage of the receiver. The tuner translates the signal down by heterodyning it with the output of an internal (local) oscillator. The component values in the local oscillator and the selective rejection filters must be changed for each different channel. Until recent years, in all receivers, this was done mechanically by elaborate multiposition switches. These are expensive (see Section 2.2) and a source of noise problems because of dirty contacts. In many late-model receivers these mechanical switches have been replaced with varactor circuitry (voltage-variable capacitors) and electronic tuners.

TABLE 1. U.S. and Foreign TV Standards

	British	U.S.	European	French
Lines per picture	405	525	625	819
Pictures per second	30	25	25	25
Bandwidth, MHz	1.75	3.528	4.167	7.155
Noise voltage, μV	30	41.1	44.7	58.6
Required signal strength, μV	180	246	268	351

The use of variactors makes it possible to change the values of the tuner components with a signal control voltage. In the same way, late-model sets use control voltages and varistors (voltage-controlled resistors) to adjust the volume level and tone of the sound. This technology requires a highly stable reference voltage that is not needed in sets not containing these components.

The electronic tuners are used in the "light touch" pushbutton receivers. Programmable receivers use a frequency synthesizer and a phase-locked loop in conjunction with a voltage-controlled oscillator (VCO). The frequency needed to translate the desired channel down to the IF is derived from the VCO by comparing the VCO output with a crystal-controlled reference frequency that has been digitally processed. Digital circuits are also being used in more expensive sets for extracting and processing the control signals discussed in the following paragraphs. At this time, digital circuitry adds to the overall cost of the receiver, but this may not continue to be the case (see Section 2.4).

The tuned-in signal entering the IF stage is a complex modulated video waveform consisting of frequencies from 41.25 to 45.75 MHz (the respective positions of the video and sound carriers). The IF subsystem consists of several stages of amplifiers and tuned circuits that process the signal. Until the early 1980s, IF strips were constructed of several stages of vacuum tube or transistor amplifiers and used resonant networks to filter out noise and adjacent channel signals. These filters usually consisted of bifilar transformer/traps, coupled transformers, bridge-T filters, and combination traps (many selective filters in parallel). These circuits are expensive and must be manually adjusted to bring each receiver into proper alignment. The increased use of large-scale integrated circuits (ICs) has decreased the need for many of these components; where resonant networks are required, they are being replaced with surface acoustic wave (SAW) filters. These are solid-state, trouble-free devices that never need adjustment. They have a larger insertion loss, which is compensated for by the modern low-noise video amplifiers.

The detector at the output of the IF stage strips the video, sound, and synchronization information off of the carrier. It is usually a simple peak detector, but in better sets a synchronous video detector is sometimes used. The synchronous detector is more expensive but creates less distortion in the

video output signal. Many available ICs include all of the IF and detector components on one chip.

At this stage, the sound information is still modulated (riding on a carrier of its own). It is detected (demodulated) and amplified by the sound IF circuitry and then amplified to drive a speaker. Integrated circuit audio amplifiers have been available for many years, and even sets that use transistors in all other parts of the receiver use an IC amp in the sound subsystem. Again, many available ICs include all of the sound IF circuitry on one circuit.

The detected video signal is amplified and used to drive the gun of the cathode ray tube (CRT). This gun produces the beam that paints the picture on the phosphor-covered face of the tube. The beam varies in intensity to produce the dark and light regions of each line. The final drive signal is provided by a power transistor.

The lines are drawn individually at a rate of 15,750 per second. The path of the beam is controlled by the horizontal and vertical deflection signals. These signals are recovered from the detected video signal by the sync separator, and then amplified and processed before they are used to drive the deflection coils on the picture tube. The currents in these coils set up magnetic fields that control the position of the beam. Many ICs now perform each or all of these signal processing functions on one circuit. The final driving signals are provided by power transistors.

The high-voltage power supply in an inexpensive monochrome receiver produces from 6000 to 13,000 volts, applied to the face of the CRT (as high as 35,000 volts in larger monochrome and color sets). This large potential between the gun and the face of the CRT accelerates the beam, giving the electrons the energy needed to produce light from the phosphor. All modern sets produce the high voltage with a ferrite-core flyback transformer in the horizontal drive circuit (which is sometimes augmented by doublers and triplers in larger sets). This transformer is expensive, but it usually provides several voltages that must be produced somewhere.

From 25% to 50% of the power consumed by the receiver is used in the picture tube gun, horizontal drive, and high-voltage circuitry. The picture tube

is also the most expensive component in the receiver (see Section 2.2). It is therefore important to consider the alternatives to this conventional CRT display (see Section 2.4).

The power supply for the electronic circuitry of the receiver is currently available in two configurations. In the U.S. sets that operate off of the AC line only, the 115 VAC is usually just rectified and filtered. In such a set, lower DC voltages are derived for various parts of the circuit by dropping the 115 DC across power resistors. Of course, a certain amount of power is thereby wasted. The sets that are AC/DC (operate off of the 115 AC line or car battery) usually use a 115- to low-voltage step-down transformer that is the heart of a 12-volt DC power supply. In such a set the rest of the circuitry operates off of 12 volts, other voltages derived from it, or voltages supplied by the flyback transformer. In a set that is solely battery operated, neither type of power supply would be necessary.

2.1.3 Trends in Semiconductor Technology

The circuitry of the vacuum tube-type television receiver (tubes for all amplifiers and active circuits, as well as the picture tube) was not that different from that of the transistorized sets of ten years ago--the tubes were simply replaced by transistors. More recently, the development of more and more high-density ICs, the increased sophistication made possible by these circuits, and the incorporation of digital circuits into parts of the noise reduction and sync separation circuitry have resulted in some major circuitry changes (at this time, digital circuitry is used only in top-of-the-line sets, but as the ICs become less expensive, it may become cost-effective to use them in even the least expensive units).

There are several reasons why it is less expensive to build TV receivers with ICs than with transistors or tubes. The components are cheaper to produce, they require less circuit wiring (there are fewer total components), and they use smaller power supplies. Also, circuits utilizing discrete tubes or transistors must be kept as simple as possible to remain affordable. The high density of the newest ICs makes it cost-effective to design very complex circuits. The use of these circuits increases the performance of the unit, which in turn makes other discrete components unnecessary (e.g., a very low-noise,

high-gain amplifier in the IF strip may reduce the number of IF stages and resonant networks required in this subsystem).

The monochrome television industry is currently in the middle of a revolution in semiconductor technology. At the time of this report, inexpensive sets are available in the United States for about $60. These sets use a variety of semiconductor technologies, including transistor level (usually an IC for sound only), low-scale integration (additional ICs for the video IF stage), medium-scale integration (additional ICs to handle the sync separation and deflection subsystems, usually a total of 6 or 7 ICs), and high-scale integration (all of these subsystems on one or two ICs).

The result of a survey of 15 late-model sets is shown in Table 2. The sets are about evenly distributed between the old and new semiconductor technologies, and only one receiver makes use of the high-scale integrated circuits. Competition is fierce because the medium- and high-scale ICs are just becoming commercially available. Import restrictions currently limit the use of high-scale ICs in this country, but this situation should change before the end of 1984. Most inexpensive TV receivers are made in Korea or Taiwan, where the low-cost labor required to assemble sets made with discrete transistors and low-scale integration is still available. Eventually, the use of low-cost ICs will offset the use of low-cost labor, and discrete transistors will only be used in the driver circuitry for magnetically deflected picture tubes.

TABLE 2. Level of Integration in Late-Model TV Sets

Quasar AP3232WW	High-scale integration
Panasonic TR5091P	Medium-scale integration
Zenith N092A	Low-scale integration
Quasar AP3230TH	Medium-scale integration
Quasar XP1465UH	Medium-scale integration
Emerson VT121	Low-scale integration
Penneys 685-1037G	Transistorized
Bohsei BR5520B	Transistorized
Penneys 685-1028G	Transistorized
Sylvania MTA022W	Transistorized
Wards GEN11272A	Low-scale integration
Penneys 685-1701F1	Transistorized
Realistic 16-102	Low-scale integration
Wards GEN11780A	Transistorized
Penneys 685-1038E	Transistorized

Competition is also keen among the IC manufacturers to develop the chip that does the most for the least cost. The three circuits that have been identified as belonging to the high-scale integration class are the Motorola MC13001, the Panasonic AN5151, and the Philips (Signetics) TDA4500 (see Appendix A). The MC13001 has been on the market for about two years. it includes all signal processing, omitting the tuner circuitry, sound circuitry, and output transistors. Currently under development, the MC13005 will also include sound signal processing and an audio output driver. The AN5151 combines almost all of the video and sound-signal processing circuitry on a single chip. It is currently being used in at least one Quasar model (see Table 2), but has restricted distribution in this country. TDA4500 is comparable to the AN5151 in that it includes most of the video- and sound-signal processing on a single chip, and is designed to be used in a very inexpensive monochrome system. All three of these circuits are expected to sell for about two dollars initially. This price should decrease as the development costs are recovered and as large quantities become available.

2.1.4 The Trend Toward the One-Chip TV

The inexpensive monochrome TV of the near future will continue to be more integrated and less expensive. The Quasar receiver at the top of the list in Table 2 (Model AP3232WW) uses only two ICs to perform all of its video- and sound-signal processing, and a receiver that incorporates one-chip signal processing should be available in a year or so.

The production of a true one-chip TV is currently constrained by the tuner and output driver electronics. These components have not yet attained the same level of sophistication as the signal processing circuits.

Some parts of television tuners are available on ICs, but these are not yet being used in inexpensive sets. Also, for optimal performance, parts of the tuner circuitry currently require electromagnetic isolation from the other components.

Discrete power transistors are still being used in all of the CRT driver stages because of the large currents and voltages that they must handle. This may remain the case until some radical change in display technology replaces

the power-hungry CRT. Most of the inexpensive sets surveyed consumed a total power ranging from 25 to 35 watts (12-in. screen) and one model (5-in. screen) operated on as little on as 2.2 watts. It is possible that output drivers with enough power-handling capacity to drive the CRT of this very low-power set could be incorporated on the main IC. However, it is not feasible to incorporate parts of the deflection circuitry and the high-voltage production circuitry because of arcing considerations and the position of the flyback transformer in the circuit.

As liquid crystal and other low-power, solid-state displays become available and affordable, the one-chip receiver may become a reality. However, it probably will not be feasible to use single chips in a low-cost receiver in the near future.

The proposed low-cost receiver using the standard signal format and consisting of no-tuner, highly integrated signal processing circuitry and a low-power CRT is at this time probably the cheapest system to fabricate in an LDC.

2.2 COST ANALYSIS OF TELEVISION RECEIVERS

The development of a low-cost television entails identifying the various manufacturing costs associated with the production of a receiver, and investigating the possible means to reduce these costs.

In relative dollars, television manufacturing costs have decreased dramatically over the last 30 years. As shown in Figure 2, the list price of a small black-and-white set has remained virtually unchanged during this time period. In 1956, a 14-inch black-and-white set retailed for $100.00 (Consumer Report, 1956). The average retail price for a 12-inch set in 1984 was $103.00. However, in terms of constant dollars, this represents a 67% reduction in actual cost to the consumer, as shown in Figure 3. This cost reduction resulted from improved production processes and advances in electronics technology.

The purpose of this section is to investigate two methods of further reducing manufacturing costs: 1) eliminate unnecessary product features, and 2) emphasize LDC manufacture. The objective of this analysis will be to help

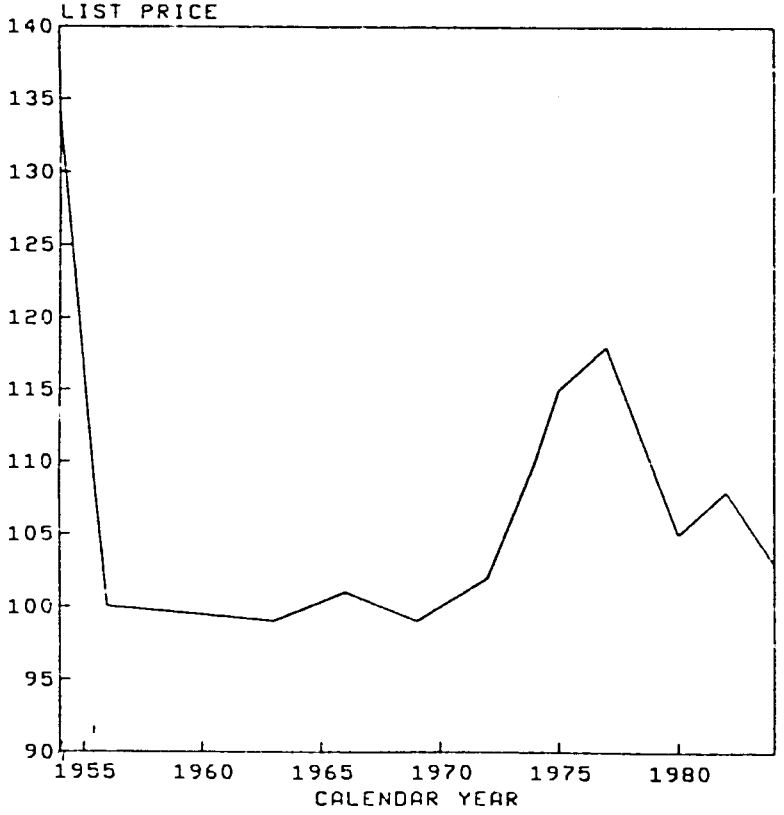

LIST PRICE

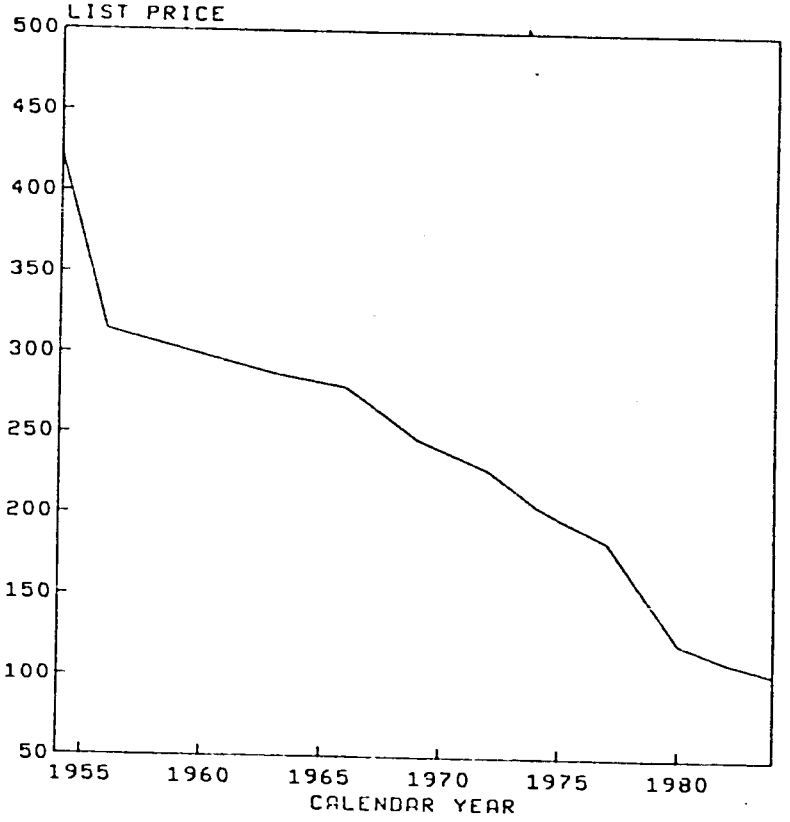

1984 DOLLARS

FIGURES 2 and 3. Average List Price of Small Monochrome Receivers

identify approaches that will fulfill the key functions of a receiver at minimal cost.

2.2.1 Cost Breakdowns of Representative Sets

Cost breakdowns of representative sets were obtained to determine which components contribute significantly to the cost of the set. The two representative sets selected for comparison were:

- high-scale IC receivers
- discrete-component receivers with multiple transistors.

The cost breakdown analysis of standard monochrome receivers with ICs was based on a typical set, the Quasar Model #AP3232WW, retailing from $89.00 to $129.00.

Component replacement costs for this set were obtained from the manufacturer's parts and service catalog, and are those paid by authorized Quasar service centers for replacement parts. Although these figures do not identify the actual manufacturing cost, they do reflect the relative contribution of each component to the total cost of the set.

A cost breakdown summary, Table 3, shows that the major cost components of a black-and-white IC receiver are the picture tube, case assembly, VHF/UHF tuner, antenna, knobs, and the flyback transformer.

These components account for over 68% of the receiver component cost. The picture tube and case alone account for approximately 50% of the component cost of the set. Therefore, if a TV receiver manufactured by an LDC is to cost significantly less than a standard set sold in the United States, the manufacturing cost of the picture tube and case must be substantially reduced.

Since the early 1970s, sets containing ICs have continued to displace sets made entirely of discrete components. One advantage of the discrete-component set is that it would be easier for LDCs to develop a transistor manufacturing capability than the capability to manufacture ICs, which require more sophisticated processes and equipment. However, it is doubtful that television production in an LDC would begin at the level necessary to justify the capital investment required to produce either transistors or ICs, as discussed more fully in Section 3. Therefore, assuming that both discrete components and/or

TABLE 3. Cost Breakdown of Typical Black-and-White Set (Quasar #AP3232WW)

Component Class	Replacement Cost, $	% Total Cost	Cumulative
Case assembly	80.72	16.1	16.1
Picture tube	165.00	32.9	49.0
VHF/UHF tuner, antenna, knobs	57.03	11.4	60.4
Printed circuit boards	26.85	5.4	65.8
ICs	10.81	2.2	68.0
Transistors	16.13	3.2	71.2
Diodes	7.51	1.5	72.7
Coils	18.75	3.7	76.4
Drive transformer	3.50	0.7	77.1
Flyback transformer	38.50	7.7	84.8
Audio output transformer	6.50	1.3	86.1
Capacitors	33.85	6.8	92.9
Resistors	23.20	4.6	97.5
Variable resistors	12.73	2.5	100.0
TOTAL	501.08	100.0	

ICs will be imported by an LDC manufacturing low-cost TVs, a comparison was made to determine which level of technology would minimize import costs. An IC receiver is compared with a typical discrete-component set in Table 4. Both are 12-inch, black-and-white receivers.

Electronic component costs for sets consisting entirely of discrete components are 24.4% higher than for sets with ICs. In addition to being more expensive than the high-scale integration set, the discrete-component set contained 38 more electronic components. To minimize both import costs and assembly labor, low-cost TV sets should be of integrated-circuit design.

2.2.2 Estimate of Standard TV Manufacturing Costs

The manufacturing cost of standard monochrome receivers is difficult to identify, because some of the components are only produced in-house by the manufacturer, or are purchased through large contracts with overseas suppliers. However, the manufacturing costs can be estimated by analyzing the component

TABLE 4. Comparison of Components Required for IC Sets and Discrete-Component Sets

Receiver Type	Component Type	Count	Replacement Costs, $
IC	Integrated circuits	2	10.81
	Transistors, diodes	20	23.64
	Capacitors	83	33.85
	Resistors	84	23.20
		189	91.50
Discrete-Component	Transistors, diodes	39	49.96
	Capacitors	91	37.10
	Resistors	97	26.97
		227	113.85

replacement costs and comparing these costs with price quotes that can be obtained for large lots of similar items. For example, if the manufacturer states that the replacement cost of a particular diode is 50 cents, and identical diodes can be purchased in large lots for 5 cents each, it is reasonable to assume that the cost to the television manufacturer of all diodes in the set can be approximated by 10% of the stated replacement cost. Once the markup between the cost to the manufacturer and the stated replacement cost has been identified, the cost of components manufactured in-house can be estimated from replacement costs.

Price quotes for electronic components used in the manufacture of standard monochrome receivers were obtained from overseas vendors. These price quotes for lots of 1000 (terms: by ocean--F.O.B. port of entry; by air--F.O.B. factory) indicated that the costs of these components were approximately 5% of the stated replacement cost. If the markup from the picture tube and case is similar to the markup for electronic components, the cost of obtaining all of the components necessary for a standard set is approximately $25.05. This figure does not include the labor necessary for assembly operations. Including labor charges, and considering that television manufacturers are capable of obtaining price quotes lower than those obtained by the project team, the total manufacturing cost of a standard monochrome receiver is estimated at under $30.00.

This estimate places the manufacturing cost of a standard set at 23% of the retail price. A similar study completed in the early 1970s estimated the manufacturing cost to be 15% of the retail price (Papanek 1972). The actual manufacturing cost is probably somewhere in this range of 15% to 23%.

2.2.3 Potential Cost Reduction Through Design Simplification

The function of a low-cost TV is to produce a discernible picture and sound. Standard black-and-white receivers sold in the United States contain several features that are superfluous in terms of this function. For example, variable volume adjustment, multiple channels, and aesthetic cases were reviewed to determine where costs could be eliminated. These cost reduction efforts concentrated on those items or components that contributed significantly to the manufactured cost of a standard receiver. The estimated cost to the manufacturer of major receiver components is shown in Table 5.

Significant cost reductions, by elimination of unnecessary features and/or by emphasizing LDC labor in the manufacturing process, may be made in three components:

- picture tube
- receiver components (e.g., VHF/UHF tuner, antenna)
- case assembly.

TABLE 5. Estimated Cost to the Manufacturer of Major Monochrome Receiver Components

Component	Estimated Cost to the Manufacturer, $	% of Total Components
Picture tube	8.24	32.9
Case assembly	4.03	16.1
VHF/UHF tuner, antenna, knobs	2.86	11.4
Flyback transformer	1.92	7.7
	Percent of Total TV Component Cost	68.1%

The most expensive component of a television set is the picture tube. The cost estimate for picture tubes is based on the price of tubes delivered in the United States, excluding profit and import duties. The total cost of a picture tube can be broken down into the following categories:

- production costs - material
  - equipment
  - labor
- transportation costs.

Material and transportation costs can be reduced by decreasing the size of the picture tube. For example, a 5-inch picture tube lists for approximately 67% of the retail price of a 12-inch picture tube. As it is doubtful that the equipment and labor costs for a 5-inch tube are substantially less than for a 12-inch tube, it can be assumed that the savings are in material and transportation costs.

Transportation costs for picture tubes between the point of manufacture and the location of the television assembly facility may be substantial if the picture tubes are imported, largely because of the fragile nature of the component. One major advantage of LDC manufacturing of picture tubes, then, is that transportation cost would be minimized.

A one-channel receiver capability using IF transmission has the capability of substantially reducing the number of receiver components required, as shown in Table 6. The items eliminated by IF transmission account for 10% of the total component cost, reducing the cost of the components necessary to produce a low-cost TV from $25.05 to $22.32. Almost as much can be saved by retaining RF transmission at a fixed frequency.

The case assembly accounts for 16% of the total component cost of television sets on the market. The estimated cost to the manufacturer is about $4. Although the cost of a case assembly cannot be eliminated entirely, it can be reduced by simplifying the case and by including LDC labor in its production.

TABLE 6. Components Eliminated by Single-Channel IF Transmission

UHF indicator	VHF tuner
Cord holder	UHF tuner
VHF knob (fine)	U/V splitter
UHF knob (fine)	Rod antenna
VHF knob	U-V cord
UHF knob	Tuner bracket
Cord hook	Tuner PC board - 2 capacitors
	- 1 resistor
	- 1 diode

Case assemblies produced by the LDC may consist of local material, such as wood, to minimize both import costs and transportation costs. If the material for the case must be imported, plastic is the most economical alternative.

The cost of lumber in LDCs with abundant timber reserves is substantially lower than in the United States. For example, log costs in the United states are 250 to 300 dollars per 1000 board feet; log costs in Central America range from 50 to 75 dollars per 1000 board feet. A television case in Central America could be manufactured from 4 board feet of lumber at a material cost of less than 30 cents.

The cost of plastic suitable for case assemblies ranges from 30 cents to over 1 dollar per pound, depending on the type of plastic used. Small plastic television cases weigh approximately two pounds or less, and can be manufactured by injection molding or vacuum thermoforming. Injection-molded cases are of better quality than thermoformed cases, but require more expensive equipment to produce. Vacuum thermoforming equipment is substantially cheaper, but produces a lower-quality case at a somewhat higher material cost. Cases can be manufactured by either method for under a dollar apiece in material and equipment costs, at production rates of 100,000 or more cases a year.

Picture tube costs can be reduced by LDC manufacture of 12-inch or smaller tubes. Approaches and technology are discussed in Section 3. Such components as the VHF/UHF tuner can be eliminated by having only a one-channel receiver capability, with or without the additional simplification of IF transmission.

The cost of case assemblies can be reduced by local manufacture of plastic cases or substitution of local materials. Not including any reductions in picture tube cost, the cost of all components necessary for a single-channel low-cost television is approximately $19.30.

2.3 COVERAGE AND DISTRIBUTION CONSIDERATIONS

This section discusses the major factors affecting broadcast coverage within the LDC. There are three such factors:

- sensitivity of the receiver
- attenuation of the transmitted signal
- type of signal distribution system.

For purposes of this discussion, it will be assumed that the population is rural and fairly evenly distributed in villages that are one kilometer in diameter and five kilometers apart. This is a good approximation of many LDCs where the rural population is grouped into small (1000 to 1500 persons) villages. The implications of other population distributions will be discussed at the end of this section.

2.3.1 Receiver Sensitivity and Noise

The noise level is the factor that predominantly determines what the operational sensitivity of a receiver will be (the ratio of the signal to the noise must be considerably greater than one for acceptable reception). There are many sources that contribute to RF noise, but the only important one at television frequencies is the thermal noise due to the motion of electrons in the molecules of the input circuitry.

The parts of the receiver that contribute to thermal noise are the antenna, the transmission line, and the input circuitry. In the following relationship it can be seen that the thermal noise voltage is proportional to the square root of the temperature and bandwidth. The sensitivity of a receiver increases as the noise voltage decreases. Thus, the sensitivity of a receiver may be increased by reducing the temperature or by reducing the bandwidth. Cryogenic receivers obtain increased sensitivity by artificial refrigeration of the RF input circuitry. However, a more practical consideration in the development of low-cost TV is the possible reduction of the bandwidth:

$$E^2 = 4 \times R \times K \times T \times (F2 - F1)$$

$$E^2 = 4.8 \times 10^{-17} \times (F2 - F1)$$

where E is the noise voltage

R is the resistance of the input circuitry (300 ohms)

K is Boltzmann's constant

T is the temperature (290K)

F2 - F1 is the bandwidth in Hz.

Since the television signal has a large bandwidth and varies considerably with changes in format, a possible way to increase coverage efficiency in LDCs might be to choose the standard format that has the smallest bandwidth. It can be seen from Table 1 that this is the British standard, with a bandwidth of 1.75 MHz. The resulting noise voltages and the required signal strengths of the receiver taken from this table show that adopting the British standard would increase the receiver sensitivity by 27%:

$$\text{Percent Decrease in Required Signal Strength} = \frac{246 - 180}{246} \times 100 = 27\%$$

The required signal strength values in Table 1 were calculated based on the assumption that the signal voltage would have to be ten times greater than the noise for acceptable signal reception. If the noise voltage is 41 μV (as in the case of the U.S. signal format), the signal level would have to be 410 μV. Assuming that the signal comes from an antenna, the incoming signal would have to be about 820 μV, because half of the voltage is dropped across the antenna impedence and half across the load. At a proposed transmission frequency of 45 MHz, the wavelength is 6.67 m. Using a standard half-wave dipole antenna, the required field strength in microvolts per meter is calculated as:

$$E = \frac{41 \times 10 \times 2}{6.67/2} = 41 \times 6 = 246 \ \mu V/m$$

The signal strengths given in Table 1 are comparable to values collected from local television station engineers and from Television Technology, Inc., a manufacturer of low-power UHF transmitters.

External RF noise and interference (as opposed to the internal receiver noise mentioned above) also place constraints on TV reception. Sources of external noise, including atmospheric, galactic, and man-made noise, are weaker at higher frequencies. Thus, the higher the carrier frequency for the TV system, the fewer problems there will be with RF interference. Man-made sources of noise dominate all others, especially in urban areas where they are a major concern. However, for the proposed frequency of 45 MHz, measurements have been taken in quiet, rural areas and the noise levels are about 1% of those in the average urban setting. This is excellent for normal TV reception and might even make possible the elimination of some noise reduction circuitry in the receiver.

2.3.2 Geographic and Geometric Effects on Signal Strength

Broadcast coverage is limited by the extent to which the signal developed by the transmitter is attenuated before it gets to the receiver. In the case of radio broadcast transmission, the picture quality is affected by the antenna configuration and the signal path. In the case of transmission line (hard-wired) distribution, the signal attenuation is determined by the geometry and composition of the cable, and is specified in dB per 100 feet (see Table 7).

2.3.2.1 RF Propagation Losses

Propagation in the VHF band (30 MHz to 300 MHz) is strictly line-of-sight with inverse square attenuation but with very little electromagnetic loss due to the composition of the atmosphere. However, for UHF frequencies (300 to 3000 MHz) the atmospheric losses become very important.

Television Technology, Inc., publishes data on the coverage that can be expected from their low-power VHF and UHF transmitters. It takes 20 watts of ERP (effective radiated power; a measure of the transmitter power output and the gain derived from the antenna) to broadcast a low-band VHF TV signal 4.8 kilometers (3 miles). It takes 710 watts of ERP to broadcast a typical UHF signal this same distance. This large difference in efficiency seems to make the VHF band the obvious choice for low-cost village TV. Thus, the low-band VHF frequency of 45 MHz is used in the following calculations.

TABLE 7. VHF Transmission Cable Attenuation and Cost Data

	Attenuation, dB/100 ft			Cost,
	Low VHF	High VHF	UHF	$ ft
Open-wire TV, 450 ohm	0.3	1.0	1.8	0.091
Flat 300 ohm twin lead	0.85	1.9	2.8	0.063
RG-58/U coax, 50 ohm	3.0	7.0	15.0	0.114
RG-59/U coax, 75 ohm	2.3	5.0	8.0	0.335
RG-8/U coax, 50 ohm	1.5	3.5	5.0	0.404
RG-8A/U coax, 50 ohm	1.22	2.75	3.9	0.380
RG-11/U coax, 75 ohm	1.55	3.7	5.0	0.145

The main factor in VHF broadcast signal attenuation is the dissipation of the power as the inverse square of the distance. This principle is applied in the following calculation, where a 75% reduction in transmitter power results in a 50% reduction of coverage distance. Thus, a transmitter power of 0.078 watts ERP should be adequate for a village 0.6 kilometers in radius (1.2 kilometers in diameter):

$$x = \frac{\log (0.6/4.8)}{\log (1/2)} = 3 \qquad \text{Power} = 20 \times (1/4)^x = 0.078 \text{ watts}$$

2.3.2.2 Transmission Line Losses

The alternative to radio broadcast of the television signal within the village is to run transmission lines to all of the receivers. The four types of transmission line that are suitable for VHF and UHF frequencies are:

- open-wire TV line, 1-in. spacing, 450 ohm
- solid dielectric 300-ohm twin lead
- coaxial cable, 50 ohm and 75 ohm
- G-line.

Table 7 summarizes the attenuation and cost data for several kinds of twin lead and coaxial cable. Costs represent bulk retail prices (1000-ft quantity) in the United States.

If signal losses (attenuation) were the only criterion, open-wire and twin lead would be used in all applications. Another of their advantages is that they are cheap and convenient to use. However, they are subject to weather conditions (losses increase dramatically in wet weather); and hanging, bending,

or proximity to grounded objects can also degrade their performance. Open-wire, the least lossy of the options, is the most susceptible to placement, bends, and other physical installation parameters. On the other hand, coax, the most lossy and expensive of the choices, is very tolerant of physical installation considerations. It is unaffected by weather conditions and can be bent, buried, or taped to a grounded post without serious signal degradation. As expensive as coax is, however, it is inadvisable to buy an inexpensive variety such as RG-8/U. The insulation on such cable contains chemicals that leach into the dielectric and cause rapid deterioration when the cable is used outdoors. The "noncontaminating" version of this cable is RG-8A/U, which should hold up for at least 15 years.

The G-line is an effective method of transmitting UHF signals over longer distances. It consists of a single wire transmission line with conical "launchers" at each end. It is inexpensive, since it uses half as much wire as the other types of cable. It is also less lossy at the high UHF frequencies, where the other types do poorly. Its performance is very sensitive to the same installation constraints as open-wire. Theoretically, for optimal performance the cones should be about three wavelengths long. Thus, the G-line is only practical for very high UHF frequencies, for which a horn might be about 1.5 m long (for low VHF, the horn would have to be about 18 m long). A possible use for G-line might be transmitting signals between cities or villages in the LDC.

2.3.3 Distribution Systems

This section discusses the means of distributing the signal to the television receivers. It is assumed that the signal has already been transmitted to the villages via satellite, microwaves, or G-lines; or that it is available on a tape playback system. The two primary methods of distributing the signal from this central location to the local receivers are RF broadcast and transmission lines. In a "typical" village as postulated earlier, both types of distribution are probably feasible.

2.3.3.1 RF Broadcasting

Radio frequency broadcasting is the most popular method of television signal distribution. A small transmitter (on the order of 100 milliwatts) should

be able to broadcast in all directions for a distance of about 0.6 kilometer. Such a transmitter should be relatively inexpensive and would be able to serve an unlimited number of receivers. It would need to have a broadcasting antenna about 3 m off the ground, and the receivers would also require small antennas. To receive the broadcast signal, the TV set must have an RF amplifier in its input circuitry.

One problem that may occur in RF distribution is that if many villages are concentrated in a small area, a receiver may pick up two signals simultaneously, resulting in ghosting and other reception problems. This problem could be circumvented by operating each of the village transmitters at a different frequency.

2.3.3.2 Transmission Line Broadcasting

The main advantage to running transmission lines from the transmitter to each of the receivers is the signal dependability. Transmission lines are not subject to the many kinds of noise and interference associated with RF broadcasting, nor is there any chance of interference between transmitters in adjacent villages.

If transmission lines run from a central point to each residential receiver, it is also possible to run power to the sets through the same wires. This may be a major advantage, especially if the individual homes do not already have power wired to them. Such a system could also use less expensive receivers, since a built-in DC power supply would not be needed.

The major disadvantage to the transmission line approach is that cable is expensive (see Table 7). Also, its transmission properties are sometimes susceptible to weather conditions and they deteriorate with age. Transmission lines can be subject to tampering if not supported by high utility poles (the only type of transmission line that can be buried is coax, which is always the most expensive). In the transmission line method of distribution the transmitted power is not independent of the number of receivers, and additional power may have to be added to the transmitter if the number of receivers is increased.

The costs of transmission lines shown in Table 7 seem to render this method of signal distribution impractical. One possible alternative is to produce open-wire line locally. "Ladder line" is constructed from two copper conductors held apart by spacers placed every 6 to 12 inches. The wire separation for No. 22 wire should be between 1 and 2 inches. This wire is available from copper producers for about $1.00/lb. This corresponds to 0.389 cents per foot for a double strand of wire, or about one-tenth the cost of the cheapest commercial 300-ohm twin lead. The insulating spacers could be made of polyethylene or other inexpensive material, and should be as free as possible from metallic impurities. Although inexpensive, this kind of line normally performs poorly in very rainy climates. For it to be useful, a practical insulator would have to be designed to facilitate watershedding. This and other cable approaches need to be examined in the context of LDC manufacturing costs and other conditions.

2.3.3.3 Other Settings and Other Distribution Systems

In densely populated areas, the overlapping of RF airwave broadcast coverages may produce ghosting. Two suggested ways of reducing this problem are the use of different broadcast frequencies and the use of different propagation polarizations.

Broadcast repeaters are available that could receive a signal from a village on one frequency and rebroadcast it to the local community on another frequency. These transmitters are less expensive than those that have the ability to take a signal from a satellite or directly from a program source (tape player or camera). The use of repeaters eliminates the overlapping coverage problem, but requires a slightly more expensive receiver that can be tuned to different frequencies (see Section 2.4). Another possible solution is to have the repeaters rebroadcast the signal at the original frequency plus or minus 10 kHz. This frequency difference is sufficient to reduce the problem, and yet small enough that a standard one-channel receiver could be used anywhere in the country.

The use of different propagation polarizations also reduces the overlapping coverage problem without increasing the complexity of the receiver. A broadcast signal is horizontally polarized (the orientation of the electric

field) if the transmitting dipole antenna is horizontally oriented, and vertically polarized if the antenna is vertically oriented. This can result in up to twenty dB of interference reduction between adjacent community transmitters.

In some situations neither 100-milliwatt RF broadcasting nor direct transmission lines will be appropriate. If the villages are too close together to permit RF broadcasting on a common frequency and yet far enough apart that the cost of wire and the signal attenuation are unacceptable, a higher-power RF transmitter (5 to 100 watts) might be used to reach several villages.

A possible arrangement for serving a system of villages from a single satellite receiver is shown in Figure 4. A video (and audio) signal would be fed to the central transmitter and the VHF signal would be cascaded out to neighboring villages via a series of translators. The antennas of the translator inputs could have considerable gain if necessary. Alternate VHF links would use different frequencies to avoid feedback around the translator relay stations. In hilly terrain, a mountaintop transmitter could originate the VHF signal as shown in Figure 5. In some cases it might itself be VHF relay.

A number of U.S. manufacturers were contacted to establish characteristics and costs of suitable transmission equipment. Television Technology Corporation (Arveda, Colorado) indicated that a 10-W VHF transmitter with an omnidirectional antenna should cover a radius of 3 miles for receivers using indoor antennas, and 12 miles for outdoor antennas. For the same coverage using UHF, 100 W ERP would be needed. The presence of heavy foliage might reduce the usable distance by a factor of four. Their MA-TVF-10 transmitter is rated at 10 W output, requires video input, and is priced at $5995. It is solid state and requires 75 VA at nominal 115 VAC 50/60 Hz. Operation at reduced power may be a possibility.

EMCEE (White Haven, Pennsylvania) makes both transmitters and translators. Their TV10A/V translator (repeater) is rated at 1 to 10 W output in the VHF band, is solid state and is priced at $9170. The VHF input can vary from -80 to -30 dbm. The preferred input is 500 microvolts. The input power is 180 W, which can be DC. A mast-mounted pre-amplifier is normally used for reception over the air. Their "remodulated" transmitter requires video input. The input power is also 180 W 115 VAC 60 Hz. The quoted price is $10,820.

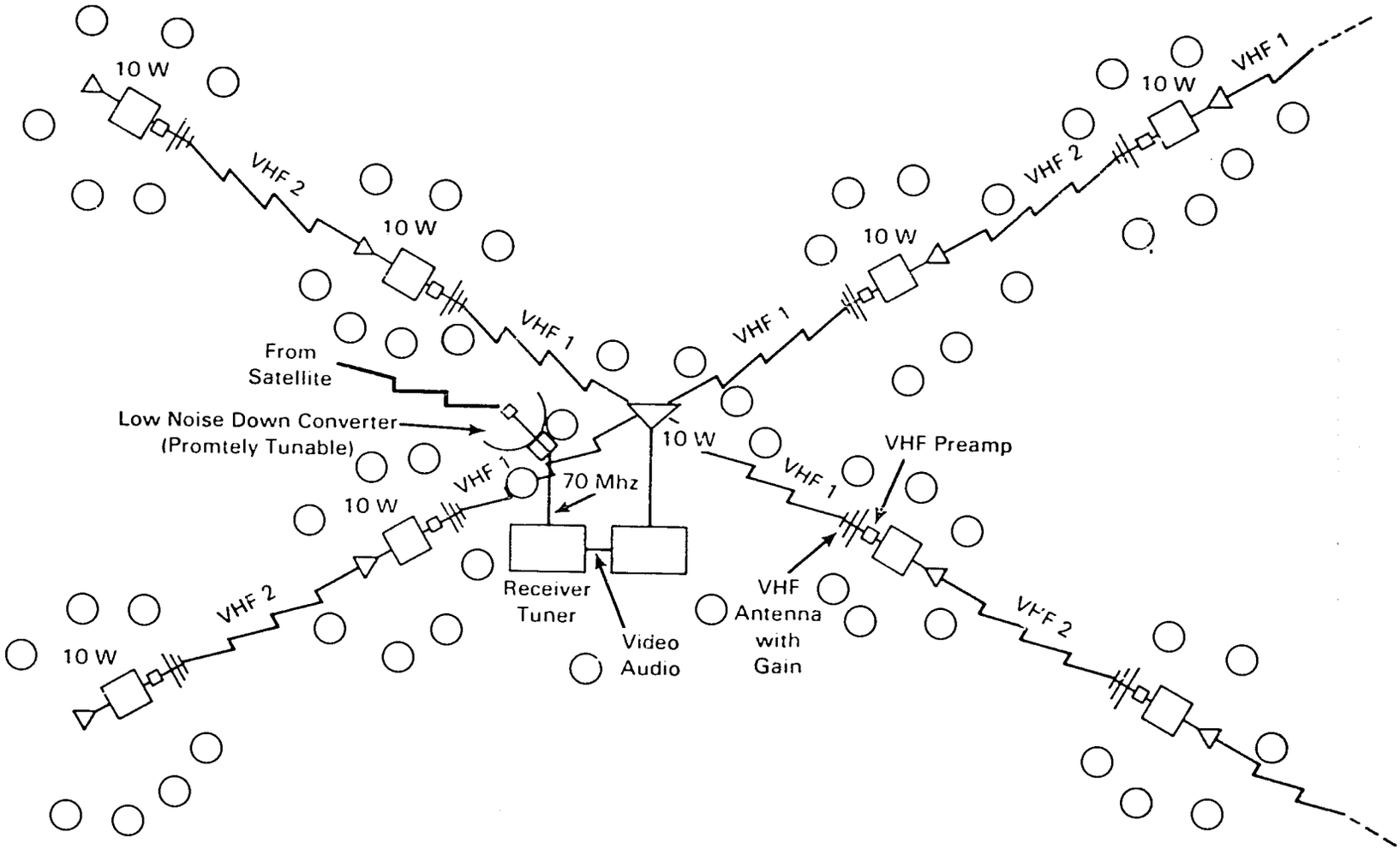

FIGURE 4. Cascaded VHF Translator System to Reach Clusters of Villages from a Satellite Receiver

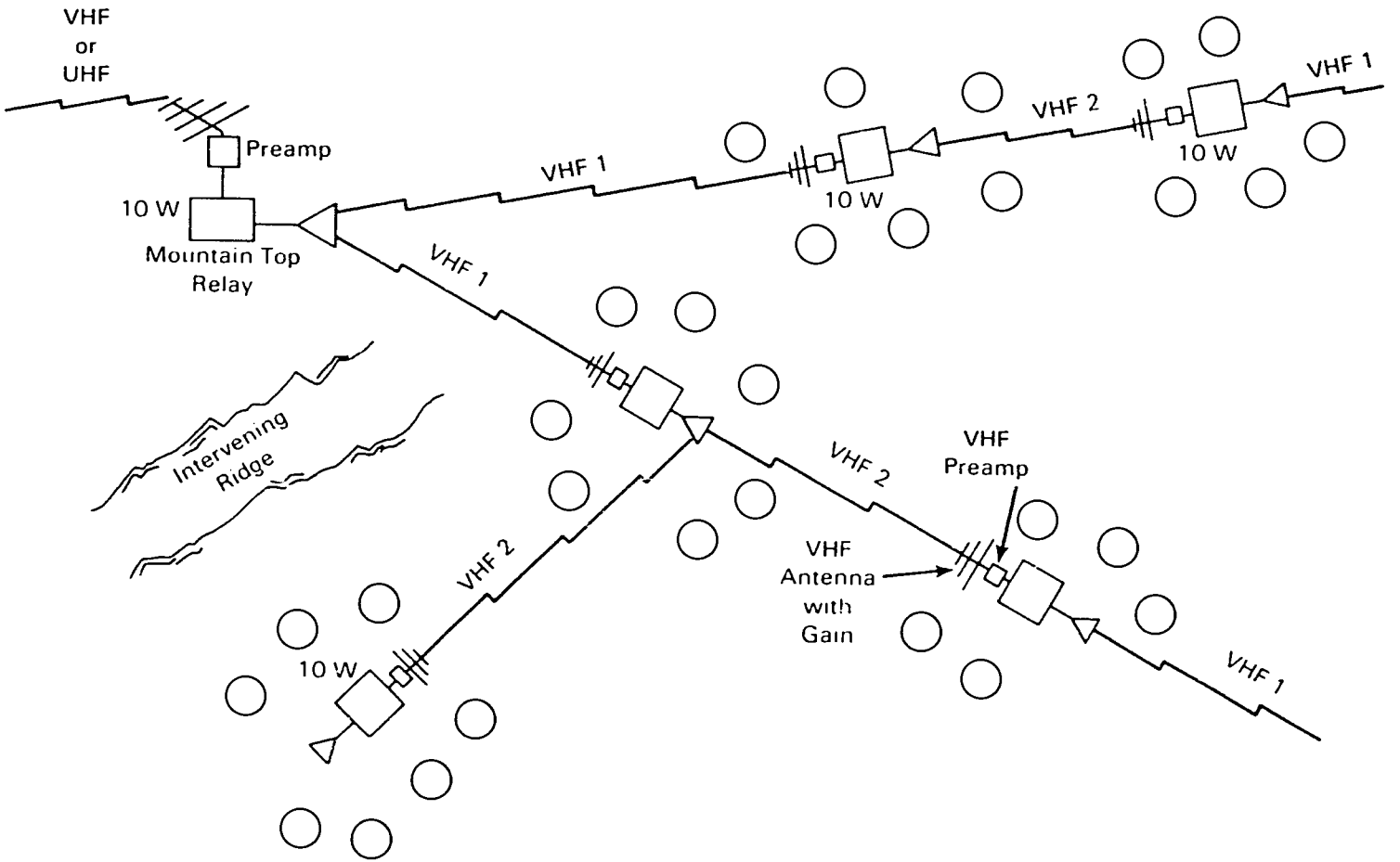

FIGURE 5. Mountaintop Transmitter with Translators Serving Clusters of Villages

In larger cities, one very large (50 to 500 kW) transmitter is the most straightforward approach. Alternatives might be to use the power lines for signal distribution (transformers would have to be modified), to use local networks based on repeaters, or to use a narrow bandwidth cable distribution system.

2.4 GUIDELINES FOR DEVELOPMENT OF A LOW-COST RECEIVER

This section discusses the many alternat[illegible] involved in developing a prototype low-cost receiver using the current signal format. A fairly inexpensive and energy-efficient set can be developed by stressing the use of high-scale ICs, investigating display tube alternatives, and having the LDC provide as many of the construction materials and as much of the labor as possible. The flexibility of the power source is also very important, because it will determine the overall usefulness of the receiver. Some of the alternatives discussed here may also apply to a prototype receiver based on a nonstandard format.

2.4.1 Circuitry and Signal Processing Considerations

It has been shown (Section 2.1) that a major advantage of staying with the standard format is the availability of high-scale ICs to handle virtually all of the signal processing. These circuits lower costs by reducing the number of components, the labor required to wire the boards, and the power consumption.

Any design based on a nonstandard format will probably have to be constructed from discrete components. These tend to be more expensive, to require more wiring, and to use more power. The only advantage to the discrete-component approach is that it may be more practical for some LDCs to produce their own transistors than to fabricate ICs.

Since the circuitry of a standard television is closely linked to its standard signal format, the redesign criteria focus on eliminating parts involved in unnecessary functions. In one proposed TV system, a central one-channel transmitter broadcasts to many slave monitors. In this approach, the tuner has been identified as the major subsystem that can be eliminated.

The RF amplifier stage needs to be retained in the case of RF airwave broadcasting, but otherwise the total cost of the set is reduced by the components associated with the UHF tuner, the VHF tuner, connecting cable, rod antenna, and associated knobs and hardware. This amounts to about a 10% reduction of the present cost of the set (see Section 2.2).

Another circuit modification that may reduce cost is to discard the components associated with the earphone output, which permits the printed circuit board and several components to be discarded. The isolation transformer can also be taken out and its impedence-matching function can be rendered unnecessary by installing a speaker with a higher impedence.

Another cost-saving measure would be to make the band pass filter and signal trap circuitry between the RF stage and the IF strip optional. In many rural areas, where RF noise levels are very low, this circuitry may be unnecessary. It could be assembled on a module that could be installed on the PC board on an as-needed basis. The coils used in this circuitry are some of the most expensive components of the receiver electronics.

The elimination of the tuner, the earphone, and the filter circuitry produces a reduction of up to 16% of the total cost of the set.

The last potential circuit simplification is associated with the use of an electrostatically deflected CRT. The CRT driver circuitry of all conventional television receivers uses five or six discrete power transistors. The total cost of these components could be reduced if they could be included on the same integrated circuit as the signal-processing electronics. However, this is not feasible with the current technology, because the drivers associated with the magnetic deflection yoke dissipate too much power. For electrostatic deflection, on the other hand, low-power, high-voltage power transistors are used for these drivers. Currently available ICs include these types of transistors in conjunction with other circuitry. It is estimated that all of the drivers in an electrostatic deflection circuit could be incorporated on the chip.

2.4.2 Magnetic Versus Electrostatic Deflection

The cathode ray tube (CRT) is available in two versions: 1) electromagnetic beam deflection and 2) electrostatic beam deflection.

Magnetic deflection has been adopted by the television industry because of its ability to produce sharper deflection angles. This has made it possible to develop CRTs that are fairly short; a typical 12-in. TV has a tube length of 10.5-in., a ratio of 8:7. However, the coils in the CRT yoke that set up the magnetic fields are power hungry, and typically consume about 50% to 65% of the power dissipated in the CRT system (see Table 8).

Electrostatically deflected CRTs have been adopted by the oscilloscope industry, principally because they tend to have a more linear beam trace. However, the electric field produced by the plates in an oscilloscope is not as strong as the magnetic field produced by the coils of a TV. An oscilloscope tube must therefore be longer to give the beam displacement more distance in which to take effect (i.e., the diameter-to-length ratio of a typical scope tube is about 1:3).

The power consumption data and diameter-to-length ratios for three televisions and two oscilloscopes are shown on Table 8. The total power consumption data for the oscilloscope is not given, because the circuitry is not comparable to that of a television receiver. The zero readings for scope

TABLE 8. Typical TV and Scope CRT Comparison

	Low-Power 6-in. Scope	Regular 6-in. Scope	Zenith 12-in. TV	Quasar 12-in. TV	Panasonic 5-in. TV
Total power, W	--	--	33.8	34.6	4.42
Beam power, W	0.2	1.17	3.75	1.8	0.126
Filament power, W	0.5	1.21	3.41	2.36	0.605
Horizontal power, W	0.0	0.0	9.13	2.9	0.874
Vertical power, W	0.0	0.0	1.11	1.8	0.47
Total CRT power, W	0.7	2.38	17.4	8.9	2.08
CRT % total	--	--	51.5	25.7	47.3
Deflection % CRT	0.0	0.0	58.8	52.8	64.6
Diameter-to-length ratio	12:23	1:3	8:7	8:7	5:8

deflection indicate that the power consumption in these circuits was so small that it could not be measured. The regular 6-in. scope shown in the table is the delivered prototype supplied by Tektronix. The low-power 6-in. scope is the Philips battery-operated Model PM3215. The three television receivers are the first three models in Table 2.

The power consumption advantages of the electrostatically deflected tubes are obvious. However, these advantages are less dramatic when the comparison is limited to the battery-operated units. The total power consumption of the 5-in. TV could be reduced from 5.3 to 3.92 watts if the magnetically deflected CRT was replaced with the CRT from the 6-in. scope. This is a total savings of 26%, but only represents a difference of 1.38 watts. One reason that the tube in the 5-in. TV is so much more energy efficient than the others is that it has a much smaller diameter-to-length ratio, and does not have to produce the large magnetic fields that other sets require for beam deflection.

The low-power electrostatic tube uses one-third the power of the low-power magnetically deflected tube, and has more potential for reducing the cost of the circuitry. This seems to make a strong case for the electrostatic tube. However, the savings in circuitry cost depends on the production of a special IC for which there is currently no guaranteed market. Manufacturers would have to feel certain of very large sales before they would be being willing to invest in the development of such an IC.

2.4.3 Electrostatic Deflection and the One-Chip TV

This section discusses the circuitry modifications that would make possible the development of a one-chip TV using an electrostatically deflected CRT.

The CRT driver circuitry of all conventional television receivers uses five or six discrete power transistors. The total cost of these components could be saved if they could be included on the same IC as the signal processing electronics. However, this is not feasible using current technology, because the drivers associated with the magnetic deflection yoke dissipate too much power. An electrostatically deflected CRT, on the other hand, uses low-power, high-voltage transistors for these drivers. Available ICs already include this type of transistor in conjunction with other circuitry. It is

very possible that all of the drivers in an electrostatically deflected TV could be incorporated on the main chip with the signal processing.

Adopting electrostatic deflection and moving these drivers onto the chip involves several circuitry modifications that should decrease the cost of the receiver. Many additional components are required to massage the horizontal and vertical deflection signals so that linear fields are produced by the yoke (deflection coils) on the magnetically deflected CRT. These components could also be incorporated onto the chip. This circuitry would be simplified because the deflection plates of an electrostatic CRT require a much simpler signal to produce a nice linear trace.

The driving signal for the primary of the flyback transformer (normally provided by the horizontal driver) would have to be produced by a special generator. However, this circuit could also be on the chip and could operate at a higher frequency and produce a smoother waveform. This would make high-voltage production much more efficient and thus decrease the size and cost of the flyback transformer.

The type of video circuit that drives the beam of the CRT is the same for both magnetic and electrostatic deflection. This drive requirement might be a matter of concern if the power consumed in the beam was expected to be as large as that consumed by the regular 6-in. scope or the two 12-in. receivers shown in Table 8. However, the recommended design parameters are more similar to the low-power 6-in. scope and 5-in. receiver. A transistor capable of providing this amount of power could easily be incorporated on the chip.

As mentioned in Section 2.1, some problems may be associated with incorporating the tuner circuitry on the chip. The proposed single-channel receiver replaces the tuner with a simple RF amplifier. This circuitry could easily be incorporated on the main IC, resulting in a true one-chip TV receiver.

The reduction in components made possible by these circuitry modifications could result in additional savings of 4% for a total reduction in component costs of 20%. It can safely be assumed that including this additional circuitry on the chip would not make the chip any more expensive. However, if it

could not be produced in very large quantities, the cost of having this chip custom-made would nullify the initial savings.

2.4.4 Design of the Power Supply

The inexpensive monochrome receivers currently on the market operate either on the rectified line (115 VDC) or off of a low-voltage DC power supply. Some of the battery-operated portables include the power supply as an external plug-in module. This is the most versatile approach and would probably be the most useful for LDC applications.

This approach would result in a standard receiver design that could be operated in many different places. Modular power supplies are a standard off-the-shelf item, and are available for most common power configurations. The circuitry of this power supply would not be any more expensive, although there would be a slight additional expense for its plastic case and for a connector to plug it into the receiver.

If the receiver had such an external DC power connector, it could easily be operated from batteries, solar cells, wind energy, or animal- or human-generated local electrical power. It would also be convenient, then, to operate the receiver from one of the above sources in one area and from power distributed through the signal transmission line (see Section 2.3.3) in other areas.

2.4.5 Two Designs for a Single-Channel Receiver

The proposed receiver stresses the one-channel approach because there is no need to be able to select channels in a village that has only one transmitter. This permits a considerable reduction in cost since the tuner circuitry can be discarded. There are actually two methods of realizing the single-channel concept. The first is to build all units to receive at the IF (45 MHz). The second is to make the frequency internally adjustable.

The least expensive method is to build all sets to receive at the IF. This is the standard frequency used by all conventional TV sets to amplify and clean up the received signal. Transmitting and receiving at the standard IF makes it possible to use common ICs in the IF strip and yet not have to superheterodyne (frequency-translate) the incoming RF signal.

The single-channel method that permits the frequency to be internally adjusted includes the superheterodyne circuitry from a conventional tuner. This permits the received RF signal to be translated down from any channel to the standard IF. These components would only add a few cents to the cost of the receiver.

The major advantage of the internally adjustable approach is that the authority distributing the sets could use the frequency adjustment to eliminate overlapping coverage problems. Using only four different frequencies a continuous grid of villages can be covered with transmitters and yet have no overlapping coverage.

The superheterodyne circuit used in the latter approach also enhances the receiver's ability to reject noise.

2.4.6 Conclusions

The prototype low-cost TV system is shown in block diagram in Figure 6. It consists of a video tape recorder modified to act as an IF transmitter and a highly integrated conventional TV that has been modified to be a simple, one-channel IF receiver. Also shown on the block diagram is the incorporation of an electrostatic display into the receiver. These are the principal concepts that have resulted from the low-cost TV investigation. Figure 7 shows a working demonstration of IF transmission to a very large-scale integrated (VLSI) circuit receiver.

The single-channel transmission from localized sources to residential monitors is a primary recommendation, as is the use of a receiver that is based on conventional circuitry utilizing the standard signal format. The use of an external DC power supply is another strong recommendation.

The method of incorporating single-channel capability into the receiver is of secondary importance. It seems that for the very slight additional expense, the method that permits the set to be adjusted for one of four different frequencies might be most useful for eliminating the overlapping coverage problems that are anticipated to occur in many areas.

The type of display tube is also of secondary importance. The electrostatically deflected CRT definitely uses less power, but it is not clear that it

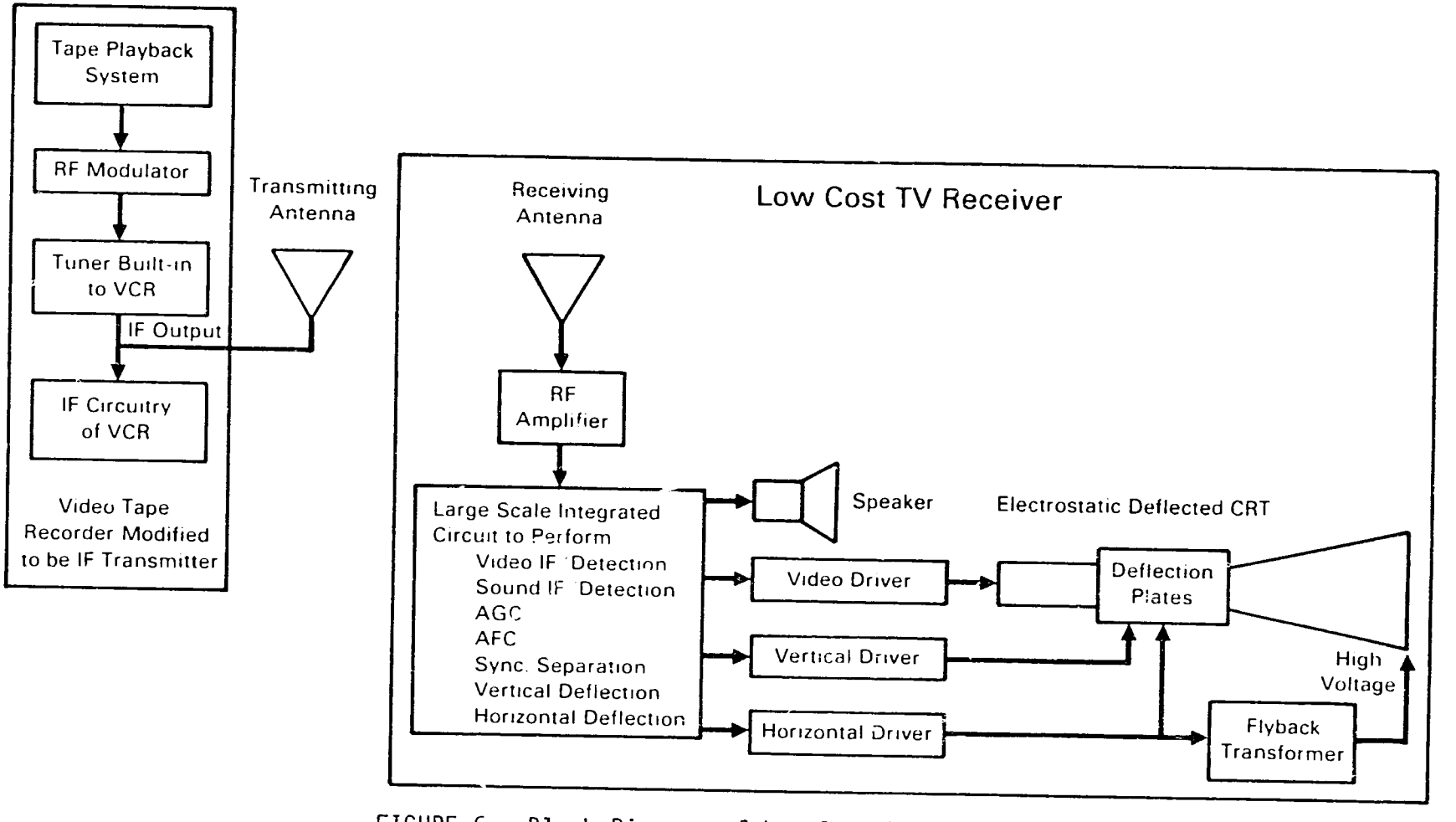

FIGURE 6. Block Diagram of Low-Cost TV System

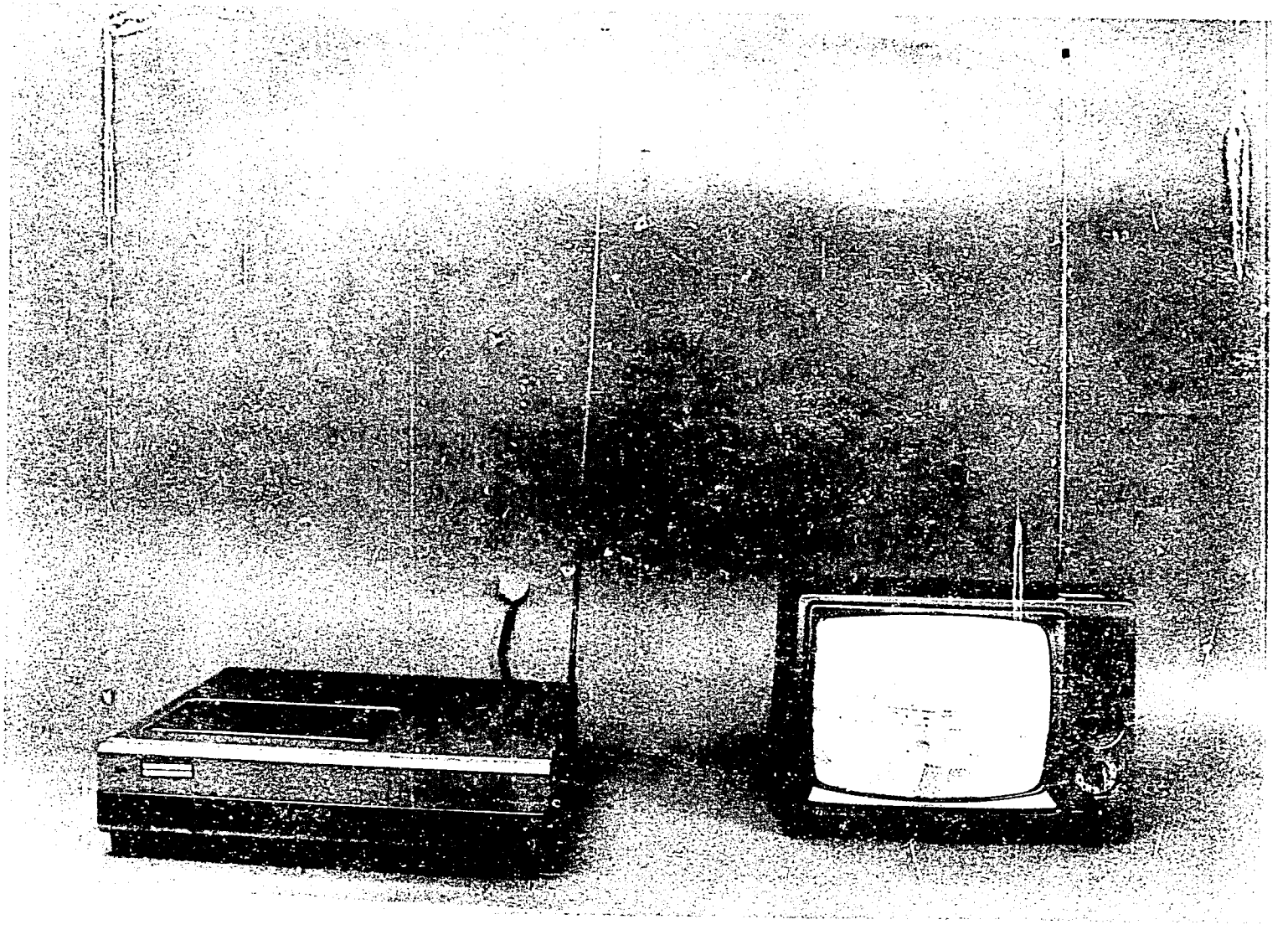

FIGURE 7. Direct IF Transmission to VLSI Circuit Receiver

has enough advantages to warrant the necessary research and development. It has also not been established which type of tube would be more expensive to produce. Assuming that there is no appreciable difference in the cost of production, the electrostatic CRT is definitely recommended, if the one-chip approach that it may make possible is commercially viable. The possibility of a special high-scale IC designed expressly for this application also would make feasible many of the approaches presented in Section 4, which deals with non-standard signal formats. Figure 8 shows a demonstration unit with an electrostatically deflected CRT. This is the regular 6-inch scope listed in Table 8.

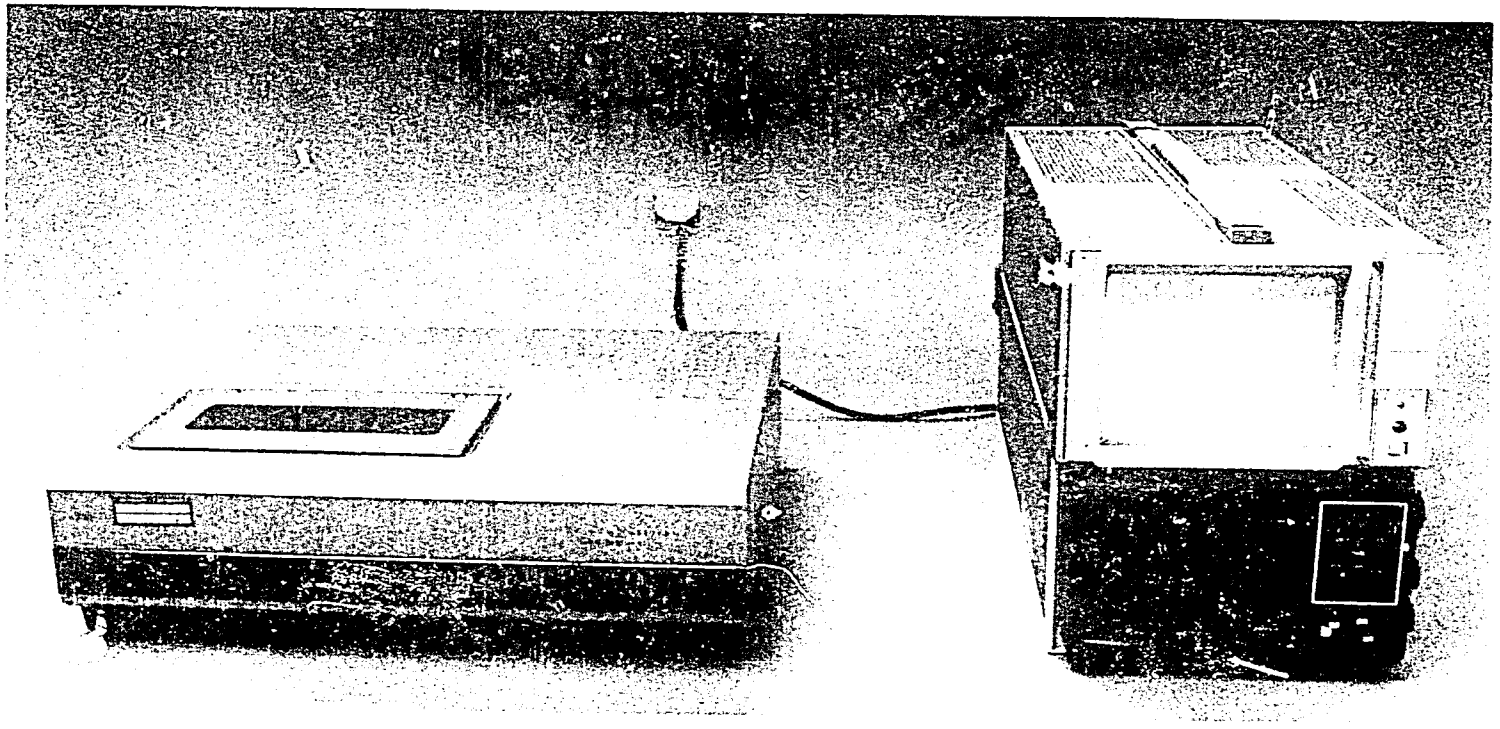

FIGURE 8. Receiver Based on Electrostatically Deflected CRT

3.0 CONSIDERATIONS FOR MANUFACTURE IN LESS-DEVELOPED COUNTRIES

The preceding section has dealt with the principles of television transmission and reception, and has examined conventional receivers from the standpoint of eliminating or modifying some functions to obtain reductions in the number of necessary components. We have noted that indigenous manufacture of several components (the picture tube in particular), as well as final assembly, may carry economic benefits for some LDCs. It is difficult to precisely determine the cost savings that might be achieved by LDC manufacture of these components, but it is fair to say that an adequate infrastructural base exists in many countries for this task. The detailed mix of technologies and design approaches for CRT manufacture may vary, as will labor costs, from country to country. However, the initial labor costs are likely to be lower by a factor of 6 to 8 than costs in the industrialized nations of Europe, North America, and Japan, and probably are on the order of 1/3 (or less) of costs in newly industrialized or transitional economies such as South Korea, Taiwan, or Singapore. The matter of import substitution, which is a consideration for low-cost television manufacture in countries such as India, Indonesia, Sri Lanka, and Thailand, raises a number of complex social and economic questions that are beyond the range of the current study, which has been primarily technical.

This section will discuss the design approaches, materials, and processes for picture tubes in some detail, as such information is not widely available. Particular mixes of designs and materials will need to be selected for specific countries by comparing technical demands with the existing infrastructure.

3.1 FUNDAMENTAL CONSIDERATIONS FOR CRT MANUFACTURE

3.1.1 Phosphors, Coating Processes, and Aluminizing

In any CRT, a phosphor coating is an essential feature. This coating emits light in proportion to the energy of colliding electrons. Various phosphors are commercially available, varying in efficiency, cost, and the color of photoemissions. The best balance would appear to be a commercially available phosphor that is known as "P4" in the industry. Such phosphors are made by

comparatively few suppliers, and much of the art of controlling for requisite purity (which affects both overall color and the uniformity of emission) is held to be proprietary. Although the technology of formulating and processing these materials could be worked out and transferred to LDCs, the amount of phosphor used in a small picture tube is exceedingly small, and the estimated total cost for coating the faceplate with P4 would be on the order of 2 to 4 cents.

Commonly, phosphors are coated onto faceplates by settling from water-based suspensions, using the assembled CRT envelope as a container from which the supernatant suspension is decanted. In tubes that are blown in one piece or prepared with fused seals, this practice is straightforward. In some designs in which metal gaskets and atmospheric pressure are used to seal the CRTs, a spray coating process (using, for example, a paint sprayer) might be substituted. This spraying approach has other attractions as well, including throughput and convenience in drying the coatings.

Many monochrome picture tubes have a thin film of aluminum on top of the phosphor layer, between the electron gun and the phosphor. This is prepared by vacuum evaporation or sputtering and is laid down on a protective film of lacquer covering the phosphor layer. Subsequently, a high-temperature burnout step is required to remove the lacquer. The function of the aluminum film is to reflect photoemissions from the phosphor out toward the viewer, rather than allowing them to diffuse uselessly backward toward the gun end of the picture tube. The aluminized film is virtually transparent to the high-energy electron beam when the high acceleration voltages of present commercial tubes are used. However, there are some good reasons to reduce the acceleration voltages, as discussed earlier. At lower acceleration potentials, lower-energy electron beams are significantly attenuated by aluminum films. Thus, although the films do reflect photoemissions from the phosphors toward the viewer, the electron energy attenuation effects begin to dominate at lower voltages, decreasing the effectiveness of the aluminizing as voltage falls, and ultimately degrading rather than improving brightness.

On the balance, although the limits of usefulness cannot be precisely determined, it is recommended that aluminizing be dropped from low-cost CRT

manufacture. This eliminates lacquering, all the complex steps of pumpdown and aluminizing, and the subsequent burnout step at elevated temperature to remove the lacquer.

3.1.2 Final Electron Lens

Provision must be made for the final acceleration of the electrons. In the instance of glass envelopes, the funnel or cone portion is coated with aquadag (a workable suspension of graphite), and an electrical connection is made through the side of the bulb to the conductive coating. This coating conforms to the funnel shape and acts as a final accelerating lens for the electron beam. This final lens carries a high-voltage acceleration of between 6 to 25 kV on conventional TV sets. The provision of the electrical lead through the side of a glass envelope is not a trivial operation. Rather than placing a potential on this final lens, consideration might be given to having the lens connected to a nominal- or perhaps even zero-charge source. Regardless, the aquadag coating in the glass cone is still used.

Glass-to-Metal Seals. The ability to bring metal leads through glass with a vacuum seal that can withstand the high temperatures of subsequent processing to produce an adequate long-term vacuum in the envelope is a classical problem in the tube industry. It is possible to bring about a vacuum-tight joint between a metal surface and glass because many metals have a dense, highly adherent oxide coating, which does not allow the passage of gas particles within the oxide surface nor in the intermediate zone between the oxidized surface and base metal. This oxide surface on the metal can be joined to the oxides of the glass through which a lead is being brought by heating the metal lead to the softening point of the glass. The glass is then touched to the surface of the oxidized metal lead, and a partial dissolution of the coating occurs in the glass, forming a bond between the parent glass and oxide of the conductor surface. This process produces a vacuum-tight seal that is also usually strong, normally exceeding the bulk strength of glass.

However, there are constraints beyond chemistry and bonding that must be met in developing a seal to withstand cooldown to room temperature from the softening point of the glass from which the seal is made, and from the subsequent reheating of the assembly. As part of the evacuation sequence, the tube

is baked out at temperatures in excess of 750°F. A major requirement is that the thermal expansion coefficients of the glass and the metal must be sufficiently matched so that shear stresses between the glass and the metal surface remain low. Otherwise, glass either fractures or spalls off of the metal. In the vacuum tube industry generally and for CRT components in particular, special metals and glasses have been formulated to meet sealing needs for envelopes. The television industry uses a glass that matches the thermal expansion coefficient of iron-nickel alloys containing 40% nickel, and iron-chromium compositions with 20% to 25% chromium.

Dumet Lead Wires. Another vacuum-tight lead used in CRTs was pioneered for the electric light bulb, for which it is still used. This approach involved achieving a thermal expansion coefficient match between the glass and the metal lead by using a composite of metals, one with a high thermal expansion coefficient and one with a very low one. With the correct ratio of properties, a desired intermediate thermal expansion coefficient is achieved. The system used in industry is to apply a copper sheath having a high thermal expansion coefficient over a nickel-iron core having a low thermal expansion coefficient. The relative amount of each material is selected to achieve a desired composite thermal expansion coefficient through the diameter of the lead. This lead is called "dumet" and accounts for the red leads one can see in the bases of household electric light bulbs, Christmas tree lamps, etc. Dumet only matches the thermal expansion coefficient in one direction; through the diameter of the lead. Longitudinally, the expansion coefficient is still mismatched. However, the soft copper accommodates to the mismatch through taking the shear load at the interface with the glass bead, and a usable seal results.

Dumet leads are used in the base or socket of television tubes; however, the Dumet configuration cannot be used for seals larger than about 1/16 inch in diameter. For this reason, the button used in the side of the television picture tube for bringing in the high voltage to the final acceleration anodes is an alloy that matches the thermal expansion coefficient of the glass quite closely. This technically difficult operation is discussed below.

Inserting the High-Voltage Button in Glass Envelopes. The procedure for inserting a button is somewhat complicated. The buttons used on television picture tubes are about 5/8-inch in diameter, and either have a re-entrant hole in them or a knob made integral with the button itself. The button is usually made of a 42% nickel-iron alloy with 6% chrome, known in the trade as 42-6. An intrinsic virtue of the alloys, in addition to thermal expansion behavior, is that the chromium provides an excellent means of developing a very high-quality oxide surface to which glass seals can be made. The green chrome oxide coating can be achieved without interfering iron or nickel oxides by heating the buttons in a hydrogen furnace with just enough oxygen present to provide oxidation of the chromium. To insert the button through the glass tube wall, it is necessary to punch out a hole of essentially the same diameter as the button. In principle, this can be done by heating a localized point on the side of the wall with a torch, blowing a hole, breaking off the blown-out glass, and inserting the button. Then, given care and dexterity, a proper seal can be formed. The bulb is then very carefully cooled with the button in place.

This classical glass-blower's approach calls for great skill. Accordingly, practice in the industry is to slowly heat the unpunched bulbs on a conveyer through a long furnace, perhaps 50 to 100 ft long. When the glass is hot enough so that it will not fracture with intense heating, a hole is punched by induction-heating a small, expendable metal cup the size of the hole and pushing it through the glass. Another mechanized process inductively heats the button itself to red temperature, and appropriately pushes and massages it against the punched-out hole, providing an adequate seal. The assembly must then be very slowly cooled (annealed) so that the bulb with the button is free from destructive residual stresses. Although there are other methods of introducing a feed-through in the glass bulb, all of them involve the same steps and the same high costs.

An alternative to inserting the button at the vacuum tube factory is to place the button into the bulb when making the envelopes. Heating operations are reduced or eliminated, since bulb production by blowing or pressing provides the glass cone at an elevated temperature. The button can be inserted at this time without additional preheating, and then annealed. Many bulbs now on

the market are prepared in this way. It appears that 12-inch glass envelopes with a button in them can be purchased in quantities of 100,000 or more for $4 to $5 (U.S. dollars) each. A smaller bulb, 5 or 6 inches in diagonal size, should cost less, because less glass is involved and the annealing furnace and conveyer requirements are significantly reduced, saving both energy and factory space. The button itself is just as costly in a small tube as in a large one.

The most extreme approach to reducing costs associated with attachment of high-voltage anode buttons through glass sidewalls is to eliminate this design feature altogether. Conventionally designed tubes can be operated without post-anode voltages, or conductive envelopes can be substituted for glass. Some of these options and associated problems are discussed later in the context of specific design approaches.

3.1.3 Stem and Electron Gun

The base of the tube and the electron gun mount are features common to all cathode ray tubes. The tube base carries eight or more electrical leads to operate the electron gun. The base fixture carrying these leads also serves as the primary support for the electrodes in the gun mount. Another feature is the provision in the center of the base for exhaust tubulation. This is usually a glass tube (although it can be metal) about 8 to 10 inches long, connected to a vacuum system for evacuating the finished TV bulb.

After the processing of the exhaust cycle is completed, the vacuum tube is extracted from the exhaust system by a procedure known as "tipping off." In the instance of a glass tubulation, the glass is heated well above the softening point, at which time atmospheric pressure collapses the tube. Then, by separating the tube a small amount from a vacuum system, a final bead is formed, ensuring a vacuum and separating the tube from the vacuum apparatus.

Electron Gun Manufacture. The makeup of the electron gun is begun with an electron source from which all the electrons are drawn. The aperture essentially acts as a first grid, and is a plate with a selectively small hole in it. Next are one or more cylindrical electrical lenses, which operate at a higher voltage than the cathode to give the electron stream adequate velocity and focus. A deflecting system is then employed to recreate the scan lines in

proper sequence from the top of the picture to the bottom and back up to the top in interlaced fashion to reproduce the picture. In the case of electrostatic deflection, two charged plates are used. One provides deflection in the horizontal direction and the other in the vertical.

These deflection plates must be connected by electrical leads to the outside of the tube, and must be held rigidly and precisely on the gun assembly in proper orientation to the basic electron stream source. The electrical leads pass through the stem assembly as discussed earlier. The mechanical support to hold the deflection plates in proper orientation with the rest of the gun is usually provided by what is known as "rodding." This consists of two or more parallel ceramic or glass rods, sufficiently far apart so that the various electrodes associated with the electron gun fit in between. Electrodes may be mechanically connected to the rods by metal clips. Another embodiment uses glass side rods and little metal studs on the electronic parts to be held (i.e., grids, deflection plates, and cathodes). These studs are embedded into the glass rods by heating the glass locally.

The glass rod system has received a good deal of use, because the softened glass can accommodate the alignment of the gun parts. Such alignment is very important. The first grid to which the electrons from the cathode are drawn and the successive electrostatic lenses should be as coaxial as possible. This can be ensured by fitting the parts onto a mandrel before they are rodded, so that the common diameters can be aligned through the centerlines of the parts. Additional features of such fixturing hold the electrostatic deflection plates. The resultant irregularities in anchor studs emanating from the parts to the glass rods are immaterial. The glass rods are softened and pinched around the studs to preserve the fixtured alignment and ensure a high-quality electron gun. An electrostatic gun assembly is necessarily quite lengthy; 6 inches is not unusual. It requires considerable hand work and has at least four more parts than an electromagnetically deflected CRT. Electromagnetic deflection is used in most modern television picture tubes.

Electromagnetic deflection uses two coils of wire around the glass neck to provide horizontal and vertical deflections to the electron beam. Over the past ten years, the form of the magnetic deflection coils has been greatly

refined and simplified, substantially reducing the amount of wire and thereby the cost. Moreover, the position of the coils on the outside of the tube allows adjustment for gun misalignment.

In the instance of electromagnetic deflection, the metal gun parts cannot be magnetic, because the deflection coils would induce magnetism into the susceptible components of the gun and create distortion of desired deflection behavior. Thus, for magnetically deflected systems, special alloys having essentially no magnetizable components are used. Although in principle magnetic materials such as pure iron could be used for electrostatically deflected CRTs, their use causes some problems that are easily avoided if the electrostatic devices also use nonmagnetic materials. The industry favors types 305 and 316 stainless steel, which are quite common alloys. The cost of the 305 stainless steel used in an electron gun assembly would be about 4¢. Thus, the choice of materials does not significantly affect costs. Expert consensus is that simplification associated with the use of nonmagnetic materials is advantageous in the case of the electrostatic CRT.

Lowest-Cost Gun Approaches. Combining some of the foregoing information and seeking the lowest-cost method of making television picture tubes, it seems that extremely simple electron guns with electromagnetic deflection may be made with no rodding at all. This would be a minimal electron gun; a cathode, a grid, and a first anode, all suspended from the button on the basis of extended wires without the use of dielectric side rods. Permanent magnets around the neck might provide focusing. This approach needs some careful examination in comparison with a more conservative engineering approach using some system of rodding.

Cathodes and Heaters. A key part of the electron gun is the cathode and heater, collectively the electron source. Electrons are made available through thermionic emission. Some metals have much higher work functions than others and have not been employed in cathodes as emission surfaces. In the early days, the electron emitter of choice was tungsten, which had to be heated well above 2300°C (3700°F) to achieve significant emission. It was soon found that combinations of barium and strontium oxides had a lower work function, emitting copious amounts of electrons at temperatures no greater than about 800°C

(slightly above dull, red heat). This temperature can be achieved on the cathode surface by having a tungsten heater inside of it capable of producing very high temperatures. The cathode/heater assemblies now used in vacuum tubes are essentially a special nickel alloy cap surrounding a tungsten heater which is embedded in aluminum oxide or some other refractory insulator. The tungsten heater's purpose is to raise the temperature of the nickel cap to about 800°C. The nickel cap has a coating of selected barium and strontium oxides. Interactions between components of the nickel cap and the oxides bring about a very low work function. Much of this technology has been developed empirically.

While the cathodes could be prepared in each factory, there is considerable art and know-how associated with their production. For a beginning operation in a developing country, it would appear wisest to buy cathode/heater assemblies, which are then incorporated into the electron gun. A certain amount of expertise is needed to ensure adequate performance of the cathodes in the final tube. However, these processes are well documented and it is not expected that the problems with the cathode would be insupportable in beginning industrial assemblies of CRTs. It would probably be most expedient to purchase the cathode assemblies with the barium-strontium coating and the inserted heaters from a centralized plant. These assemblies are available in large quantities in East Asia at costs between 5¢ and 10¢ each.

3.1.4 Final Assembly of CRTs and Subsequent Processes

This section will summarize the final assembly of the gun and envelope, and the subsequent operations of evacuation and cathode activation. By describing common practice and by pointing out basic requirements, technical needs for local manufacture are indicated.

Drop Seal. If a glass envelope is used for the main CRT body, a technique called "drop sealing" may be used. Although a variety of methods are available, including the use of fritted glass or glass ceramics, drop sealing is fast and effective for joining stem-mounted gun assemblies to tube necks. The technique originated in the manufacture of electric light bulbs, so the technology is widely dispersed throughout the world. The CRT envelope is held with the large diameter face up and the glass neck extending vertically downwards. A set of rotating gas fires is provided around the neck of the bulb. The final

assembly of the CRT is made by inserting the gun mount on its glass stem up into the envelope neck. The excess neck length extends beyond the button part of the glass stem assembly. Rotating gas fires bring the neck of the tube in the vicinity of the button to the softening point of the glass, which then welds to the button. With continued heating, the excess length of the tube neck drops away. This step is called the "drop seal." The fires are then oriented to ensure that a full glass-to-glass bond occurs between the stem button and neck. At this point the cathode ray tube is fully sealed, except for the glass exhaust tube.

Exhaustion or Preparation of Vacuum. A very high-quality evacuation of the CRT is necessary for effective operation and long life. This is achieved by mechanical and diffusion pumps, by bakeout or outgassing under vacuum to release bound water and other contaminant molecules, and, finally, by chemical reactions within the tube to integrate stray molecules into stable compounds. This latter step may be thought of as a form of absorption pumping. The reactants used for absorption pumping are called "getters."

Experience has shown that the very minimum bakeout temperature is 300°C, and 400°C is preferable. The internals of the tube, envelope, and seals have to be capable of withstanding these bakeout regimens.

Cathode Breakdown. Once the tube has been outgassed by heat and pumping, the cathode is broken down. In this process, the cathode is heated to thermally disassociate its barium-strontium carbonate coating down to the proper oxidation levels. During this step, gases are given off and exhausted through the vacuum system.

Getter Flashing. After this step the tube is removed from the vacuum system by the tip-off procedure described earlier. Then, depending on details of the process, the getter is flashed to provide continuous chemical pumping inside the vacuum tube. As with barium-strontium cathodes, there is a fair amount of art in manufacture of getters, which are usually purchased ready-made. Getter flashing evaporates the material, which is then deposited in a thin film over a large effective pumping surface. In classical glass vacuum tubes, flashed getter gives the inside of the glass tube a silver appearance, which is actually from compounds of barium.

In the instance of the cathode ray tube, it is important that the getter material is not flashed across the phosphor on the face plate side. Since the distribution of flashed getter is essentially by line-of-sight, shadowing or focused containment is used to avoid this. In tubes with glass necks, the getter is flashed by induction heating through the tube wall. The getter holder is essentially a round loop with a short circuit so that the induced currents can be very large. If induction cannot be used (e.g., in the case of metal envelopes), the getter is flashed by resistance heating, using current through two special leads in the base of the tube. Even in some glass tubes, supplemental leads are sometimes provided for this purpose.

Cathode Activation. After getter flash, the tube is cooled slowly to room temperature. The cathode is then activated, and the tube is tested. Activation of the cathode is accomplished by heating the cathode for short periods of time, often in a sequence of steps somewhat above the ordinary operating temperature of the cathode. This is known as "activation." At the end of this step the requisite low-work-function electron emitter is fully effective, and the CRT is operational.

The tube may now be tested. This testing would probably be limited to a check on unwanted shorts, inadvertent open circuits, or gas. In the instance of extremely low-priced television sets, it is likely that final testing would be in the final television set assembly.

3.1.5 Additional Considerations

There are a number of other considerations that affect the choice of specific designs and manufacturing methods. These are simply noted here in the interest of a complete treatment. They are:

- consumer safety in the event of tube implosion
- ion burn concerns.

Present commercial designs provide intrinsic safety in the event of tube breakage and implosion by the deliberate selection of balances of stresses and acceleration directions of fragments on failure. Any new designs would either draw on previous envelope designs to deal with these safety issues, or would themselves require some analysis and testing to optimize safety.

Ion burn problems were evident in early picture tubes, partly due to the quality of evacuation. If sufficient stray molecules are left in the evacuated envelope, these will be ionized by the electron beam, and accelerated in basically a straight line toward the center of the screen. The problem may cause browning or other discoloration to the phosphor in the middle of the picture. Solutions balance evacuation, choice of phosphors, use of ion traps, and other methods. If CRT technology significantly departs from current practice, the ion burn issue and its resolution will need to be addressed.

3.2 SPECIFIC DESIGN POSSIBILITIES FOR CRT MANUFACTURE

Through extensive research, including discisions with CRT designers and manufacturers, four basic approaches to CRT construction have been identified:

1. an assembly of faceplate, funnel, and tailpiece components joined with solder glass
2. a monolithic, blown-glass envelope
3. a cylindrical metal envelope to which a faceplate and oversized baseplate are joined using metal gasket seals
4. a more conventionally shaped conical envelope of thin-walled metal, which would use fused glass-to-metal seals at the tail end.

Each approach has desirable features and drawbacks, so that selection of a particular combination of designs and materials would be based on an assessment of the infrastructural strengths in particular candidate countries. Costs and availability of materials and manufacturing technology will vary from country to country, and will favor glass technology in some countries and metallurgy in others. Although some cost estimates and quoted prices are included in the following discussion, these numbers represent prices to U.S. buyers, and are generally based on U.S., Japanese, or newly industrialized country manufacture.

The following subsections briefly describe the four approaches to tube design/manufacture.

3.2.1 Assembled Glass Envelopes

The technique of joining molded glass parts through the use of glass solders or glass-ceramic seals is widely practiced in the industry. The basic idea is illustrated in Figure 9, which shows a fairly complicated tongue-and-groove joint arrangement between the parts. This particular approach to CRT envelope fabrication was originally developed for large picture tubes, which become rather massive and irregular when made as single pieces. A quoted price of $4.50 each was obtained for assembled, 12-inch-diagonal envelopes with attached anode buttons, in lots of 200,000. Although price quotes were not

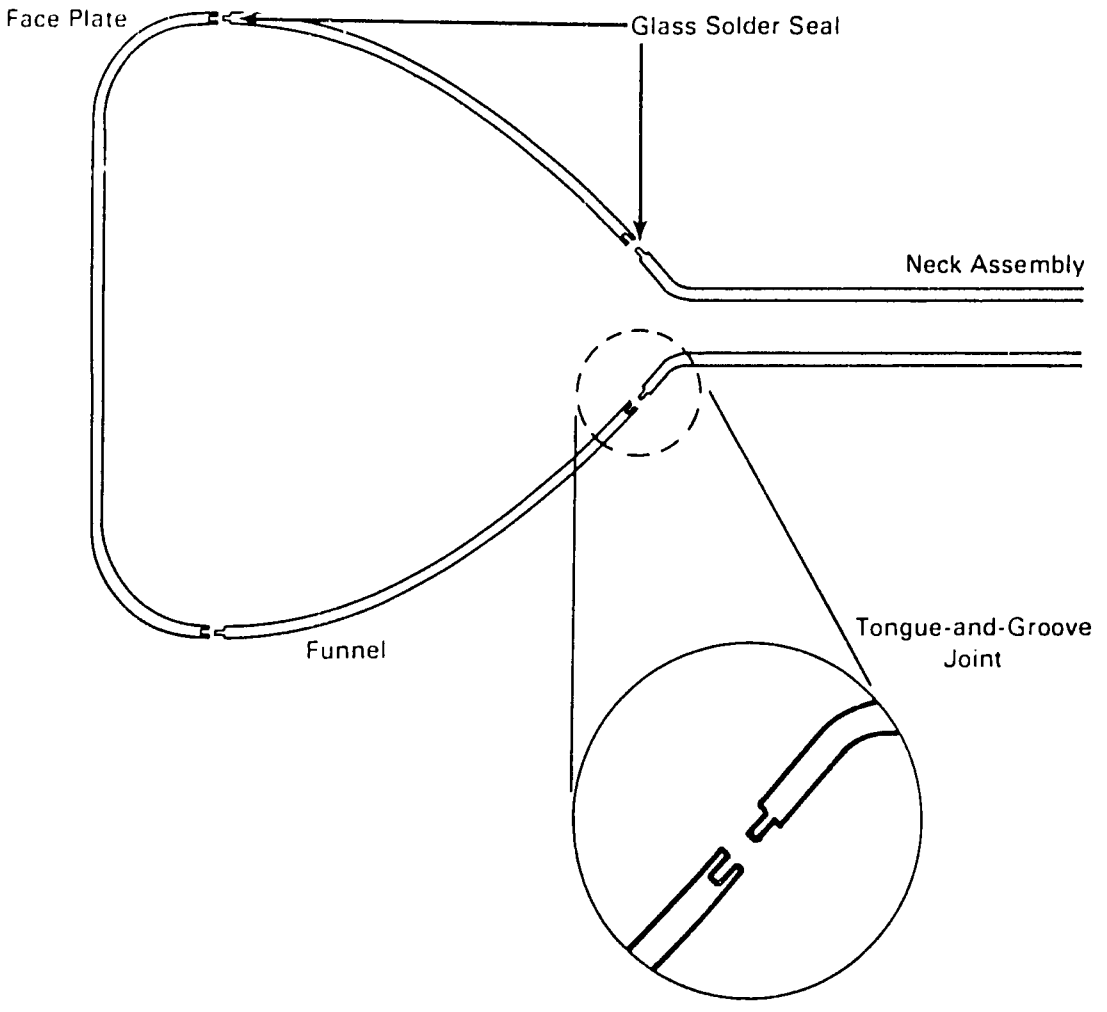

FIGURE 9. Glass CRT Envelope Assembled from Separate Components

obtained on smaller tubes, it would be reasonable to suppose that 5- to 7-inch-diagonal glass envelopes could be purchased in large quantities ranging from $2.50 to $3.00. Attached anode buttons account for about 50¢ of this cost in either case. Such estimates are for envelopes manufactured in Japan or South Korea, and added into their cost is the cost of packaging and transport. It remains to be seen how the combination of reduced labor and transport costs might lower overall costs in specific countries.

3.2.2 Blown-Glass Envelopes

Single-piece, blown envelopes have been used for CRTs in the past, and are perfectly suitable for smaller envelopes. Light bulbs, reflector floodlamps and spotlights, and vacuum tubes are made by blowing. Also, vast tonnages of glass containers for beverages are made using automatic blowing machinery in conjunction with continuous glass melters. A container glass furnace typically operates at 60 to 120 tons of glass per day, feeding multiple blowing stations with gobs of glass from a forehearth to make bottles almost faster than the eye can follow. Assuming the smaller-scale throughput and a CRT envelope weight between 1.5 and 2 lb, about 60,000 envelopes could be blown in a day. Assuming a glass batch cost of about $30 per ton, the material cost of each envelope would be about 3¢, to which must be added the amortization of furnace refractories, energy costs, and labor. It is improbable that a blown-glass CRT envelope would cost more than 60¢ if made in this way.

Glass melting and forming can be scaled over a wide range, and hand work can be substituted for machinery. A team of glassblowers, working from an open day melter and blowing into molds can produce piece work at a rate not greatly different from that achieved by a single machine blowing station.

However, in countries that already have active container glass industries, it may be most economical to operate limited production runs of CRT envelopes as a part of a mixed product line including bottles and jars. Products calling for similar gob weights could be selected, so that only molds are changed. Other changes would be increased attention to thermal homogeneity and refining of the glass in the forehearth. Such changes, necessary to achieve adequate glass quality and uniformity of wall thickness, would benefit the quality of other glass products as well.

The single-piece blown glass envelope is clearly the cheaper of the two glass versions. An idealized view of such an envelope is shown in Figure 10. If done with bottle-making machinery, walls are likely to be heavier and less uniform than in the case of molded and assembled CRT envelopes. This does create some difficulties in cooling the envelopes following processes such as sealing in gun assemblies and baking out (outgassing) procedures, but these problems are readily managed by controlling heat loss rates in a moving annealing lehr. Any accompanying irregularities in final anode voltage can be dealt with by making the glass envelope slightly oversized.

Both of the glass envelope technologies are widely practiced, and either could be adapted readily to the technical infrastructure in many countries. The built-up tube more easily achieves precision of form, minimization of weight, and freedom of shape, but is also intrinsically more costly because of added manufacturing steps and equipment.

Existing techniques of phosphor deposition from water suspensions could be used for either version of the glass envelope. Although methods might be devised to spray such coatings, it is not necessary; and the benefit for doing so has not been fully analyzed.

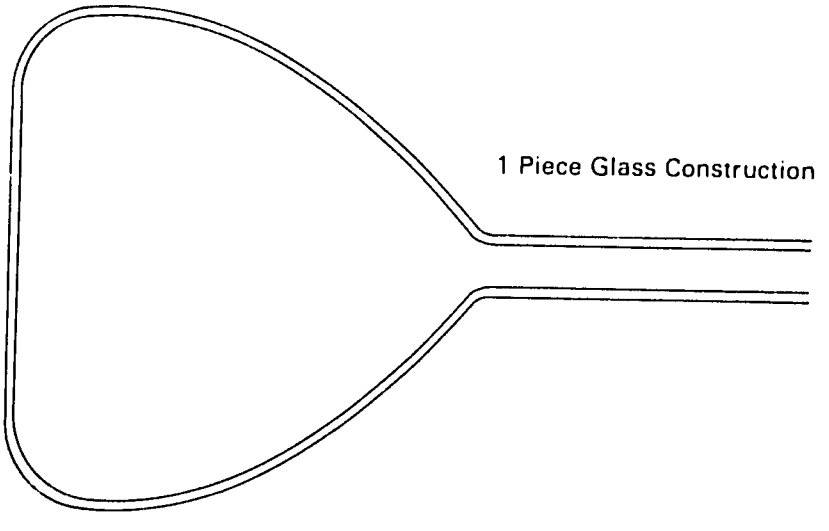

FIGURE 10. Single-Piece, Blown-Glass CRT Envelope

3.2.3 Cylindrical Metal Envelopes

One way to eliminate the problems of making conductive feed-throughs in glass is to eliminate glass and prepare a conductive envelope at the outset. The simplest design configuration, shown in the upper part of Figure 11, consists of a cylinder made from steel, perhaps of the high-quality deep drawing stock used for making automobile body panel shapes. This cylinder is flared at both ends, and metal gasket seals are used for the faceplate and gun base. As can be seen, the deflection coils are mounted inside the envelope. Although flat glass is shown as the faceplate, discs could be sagged or sunk into curved configurations by heating in supporting molds. This is a common procedure in

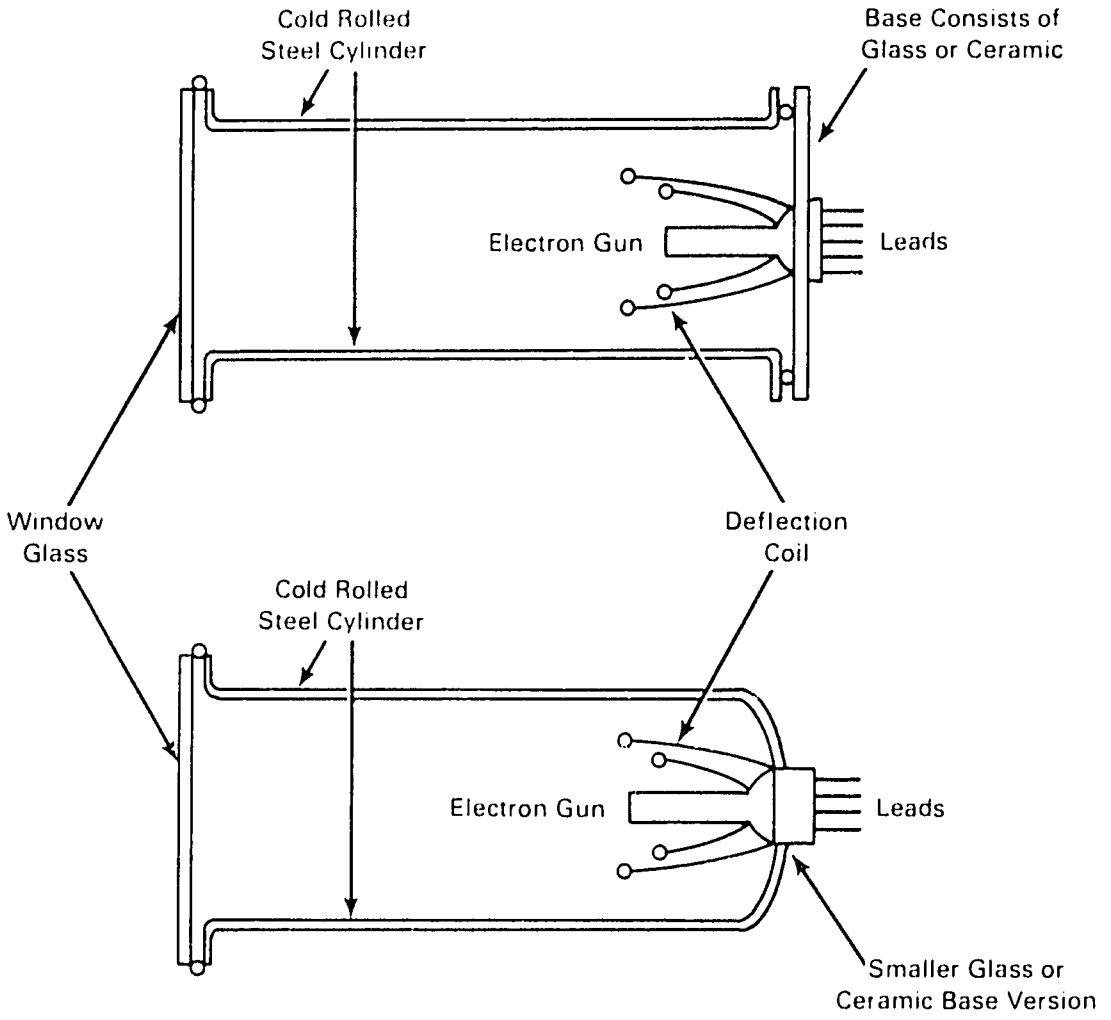

FIGURE 11. Cylindrical, Metal Envelope CRT Designs

making so-called "bent glass" for clock face windows, magnifying mirrors, and watch glasses. The technique has also been used to prepare curved faceplates for TV picture tubes.

Curved faceplates are attractive because of their strength and their deflection behavior under loading by atmospheric pressure. Flat plates are deflected to concave shapes on the side toward the atmosphere, and the edges are thereby lifted from seals. However, a generic problem with metal seals is leakage through scratches, folds, and other defects, and it is necessary to have a close fit at the gasket to achieve a leakproof assembly. There is an inherent conflict between the need for a close fit and the distortions that can accompany glass sagging if not carefully and consistently done. Edge processing by lapping and polishing can be done to restore flatness and edge quality, but this adds to the cost.

Probably the best alternative would be to use an adequate thickness-to-diameter ratio for the glass plate, and to make flat faceplates by cutting from sheet glass. In countries that have a float glass industry for preparation of plate glass, this material would be both economical and of high quality.

Two versions of the cylindrical metal envelope CRT are shown in Figure 11. Both are predicated on the use of metal gasket seals. The upper configuration is the simplest envelope shape, with symmetrical end flares. However, it calls for a comparatively large baseplate to carry the leadthrough conductors for the gun and deflection coils. Whether the baseplate is glass or ceramic, this approach trades off envelope simplicity for higher cost and weakness in the large-diameter baseplate. The lower version shows a reduction in the size of the baseplate, achieved by changing the shape of the metal envelope to that of a deep-drawn cup, with a flange at one end for the faceplate and a smaller perforation at the cupped end for the baseplate attachment.

The cupped tube configuration does lead to a reduction in the size of the baseplate, with an accompanying reduction in its cost and an improvement in strength. However, the plate surface area is greatly reduced, leading to substantial loss of loading by atmospheric pressure. This may make a mechanical or metal gasket seal impractical.

Both configurations place the deflection coils inside the envelope. This is not an insupportable problem for manufacture, although it does call for special, high-temperature polymeric insulation for wires in the coils, using plastics not widely made in LDCs (polysulfones, polyimides, etc.). Also, it is not as easy to adjust deflection coils to compensate for normal variations in manufacturing tolerances. For these reasons, this approach may be more suited to electrostatically deflected CRT designs.

Both versions of the cylindrical envelope would use resistance-heating to flash the getter. Tubulation for evacuation might be incorporated in the glass base in a conventional manner, or could be brought out from the metal envelope as a metal evacuation line.

Because of its cylindrical shape, this design would require the use of 0.125-wall thickness steel to support the structure against buckling by atmospheric pressure. Accordingly, mass of material is substituted for strength imparted by shape, and the rolled sheet steel blank to form the cylindrical design in 5- to 6-inch diameter would weigh about 6 lbs. At 20¢ a pound, material cost would be about $1.20 for each metal envelope.

3.2.4 Conventional Funnel Shapes in Metal

To complete the review of possible design approaches, some refinements on the metal envelope idea are shown in Figure 12. The approach accepts the idea of using a fused glass-to-metal seal for the neck. This permits the main body of the envelope to be made in a more conventional funnel shape from substantially thinner stock (perhaps 0.60-inch thickness). However, on geometrical grounds, a cone would require only about 1/3 the material used in a right cylinder of like diameter, keeping thickness the same.

In this design, a glass tailpiece is added, as with a more conventional envelope. This allows the gun and deflection coil design to follow conventional practice, allows for some adjustment of the deflection coils to compensate for manufacturing variations, and leaves open the option of flashing getters by induction heating as well as resistance.

The conical funnel can be made by an unconventional but simple roll-forming technique that provides thinner walls and comparatively thicker flanges

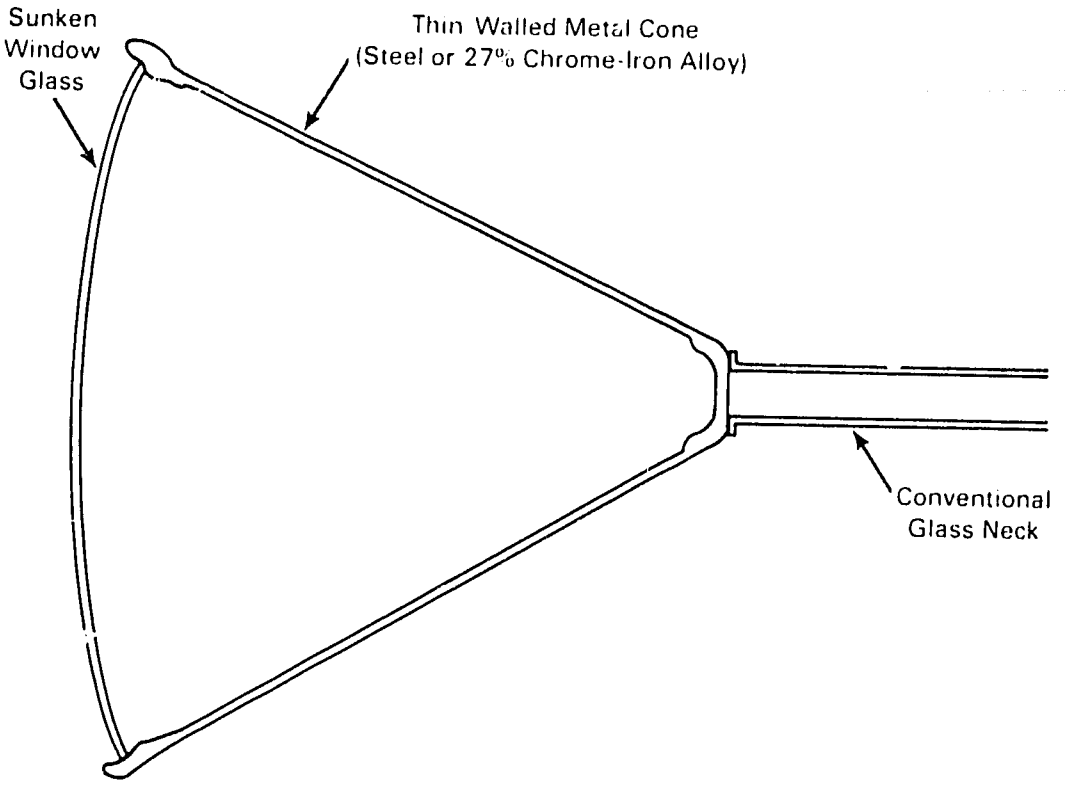

FIGURE 12. Metal Funnel CRT Design

at both ends. There is ample past experience in this area, as several million vacuum tubes were made in the United States using a 27% Cr iron alloy, sealed to curved faceplates made from sunk or sagged plate glass. Many of the first color picture tubes were also made with metal envelopes, in sizes up to 24 inches in diameter.

To minimize costs with this approach, it would be desirable to substitute deep drawing automobile stock for the 27% chrome alloy, at about 1/10 the cost. This would call for developing proper fused seals with the glass tailpiece. If extended to fused seals for faceplates, some updating of World War II work on radar tubes using this alloy might be needed, chiefly to identify durable glasses with a suitably close coefficient of thermal expansion to the funnels.

All the metallic envelope designs eliminate the task of inserting a metal button as a high voltage anode feed-through. This is a manufacturing simplification, and also yields a stronger envelope.

3.2.5 Conclusions

The approaches discussed in this section indicate a range of possibilities for choosing designs and materials, along with processes for fabrication, to make CRTs in less-developed countries. Without stretching the technology base very far, it seems reasonable to assume that the metal envelope designs may be executed with materials costs on the same order as glass envelope designs. The detailed analysis of costs and relative technical demands of each approach can only be taken in a fully meaningful way in the context of specific countries. Another consideration, not really examined here, is that an export market may be desired for LDC-made CRTs. Indeed, in many cases predictable international trends may extend CRT manufacture to new LDC centers of low-cost labor. In this case, methods and products will closely resemble those now on the market (i.e., assembled glass envelopes).

However, adopting some combination of suggested possibilities from our analysis and considering the lower costs of labor, packaging, and transport, CRTs can probably be made in many LDCs for approximately $4. This would include the prospect of buying some components (like cathodes, heaters, anode buttons, sealing glass base buttons with leads embedded) initially, taking the import substitution process toward 100% domestic content.

Some of the recommended savings can be realized with imported components by specifying changes and buying in quantity. An example is to delete aluminizing of the phosphor.

As a general observation, based on the evolution of technologic infrastructure and social development in countries like South Korea, Hong Kong and Taiwan, diversification of economic activity and growth in personal earnings eventually make it attractive to begin substitution of capital investment and higher technologies for initial, labor-intensive activity. Although it is useful and ultimately beneficial to all to use the advantage of low-cost labor as a substitute for unavailable capital, it is not wise to design a technical approach or industry that will depend indefinitely on extremely low labor costs. The upshot must necessarily be preservation of a starvation-wage labor system or a technology that cannot be sustained as personal earnings rise.

4.0 INVESTIGATION OF NONSTANDARD FORMATS: BANDWIDTH REDUCTION

In some respects, the technology of television manufacture has gone beyond the position of some years ago, when the initial proposal for this work was submitted. Our subsequent discussions with both AID and NTIA specialists led to some restructuring of the approach. The net result has been to emphasize approaches that stay with standardized TV formats, and to retain compatibility with expanding coverage of conventional signal broadcasting in and around larger cities in LDCs.

4.1 IMPLICATIONS OF BANDWIDTH CHANGES

An important part of our original thinking was that reductions in bandwidth could reduce the overall cost of television systems. Part of that thinking was centered on the intrinsic relationship between bandwidth and receiver sensitivity requirements, following technical considerations already discussed in Section 2.3. Progressive narrowing of bandwidth progressively reduces power requirements for transmitters, other things being equal, by effectively raising the sensitivity of receivers (putting this consideration together with possibilities for antenna gain creates some of complication, and the issues are not entirely straightforward, since the frequency regime *per se* is important in antenna requirements, as well as bandwidth within that regime). As discussed in Section 2.3, attenuation in transmission lines decreases with decreasing bandwidth.

These intrinsic advantages to reduce bandwidth are still real, and can make some difference in the overall power requirements for RF air transmission or cable systems. To the degree that transmitter costs are susceptible to reduction with reductions in power requirements, savings can be achieved in total systems. However, such savings may not be sufficient to justify signal conversion from standard format or creation of new transmitter designs to handle modified bandwidths, particularly if savings are not evident in other parts of the television system.

4.2 IMPACT OF CIRCUIT EVOLUTION ON POSSIBLE COST SAVINGS

Based on design approaches originally developed with tube-type receivers and subsequently carried into transistor designs, it would be possible to reduce the number of components and associated costs by narrowing bandwidth. However, the trend in circuit evolution, which has moved toward VLSI circuits, fulfills all the complex functions of video processing and sweep circuitry at substantially lower costs than did earlier techniques. These circuits are made to handle conventional, standard format television signals, and are made in large quantities. High-volume production amortizes the cost of circuit development, and keeps unit costs very low. These trends in circuit development have been reviewed earlier, and are pointed toward single-chip receivers.

To operate at a narrower bandwidth, it would be necessary to develop an entirely new VLSI circuit chip, and to establish high-volume production of this product; or to create alternative circuitry that substitutes large numbers of discrete components for present VLSIs. The latter approach would be at least as expensive as the present IC state-of-the-art receiver technology, if not more so. Given the front-end investment in design and development, as well as manufacturing startup, special VLSI circuits for reduced bandwidth operation would be slightly less expensive than normal bandwidth ICs that integrate a comparable scope of functions. IC developments have effectively wiped out most possibilities of receiver cost reduction if only commercially available components are used.

4.3 TECHNIQUES FOR REDUCING BANDWIDTH REQUIREMENTS

We looked briefly at the possibility of abandoning interlacing and changing the framing rate to reduce bandwidth requirements. But, as shown in the formula in Section 2.1.1, increasing the frame rate increases the bandwidth. Even allowing for the comparatively low frame rates permitted by reduced brightness, this appears to be a losing game.

The most practical and significant way to reduce bandwidth requirements is to reduce the number of lines in the scanning raster (again, these relationships have already been discussed in Section 2). With the proviso that clear

economic benefits do not seem to be achievable at the receiver without additional developmental investment in circuitry, the concluding subsections of this discussion will cover signal conversion and the quality of images as displayed by various reductions in line numbers. These reductions are illustrated in still pictures, and in a video tape was prepared to show their effects.

In order to retain maximum image quality with reduced bandwidth, the TV signal must be reformatted. Horizontal and vertical image resolution should be approximately equal to best match the characteristics of the human eye. In standard TV signals, this is accomplished by using 525 scan lines, refreshed 30 times per second, and requiring a bandwidth of approximately 3.5 MHz. If this format were retained, reducing the bandwidth would affect only the horizontal resolution, producing a horizontally "smeared" image. It would be much more effective to also reduce the number of scan lines and/or the refresh rate, so that the horizontal and vertical resolutions would remain matched.

There are two general ways to reduce the resolution and bandwidth. The first method, shown in Figure 13, uses a standard TV monitor and a low-resolution TV camera. A standard TV signal produces an image on the monitor, and the camera converts it back to a lower-resolution signal. This method is conceptually similar to commercial units for converting movies to video. Advantages of this method are that it is relatively inexpensive and could be constructed from off-the-shelf equipment with only minor modifications. A disadvantage is that periodic adjustment might be required to compensate for drift in the camera and monitor. This problem could be minimized by using one of the new solid-state cameras, which are quite stable. However, even vacuum-tube cameras such as vidicons would probably require adjustment no more often than once or twice a year.

The second method, shown in Figure 14, is based on digital image-processing hardware. Each frame of the video signal (both fields) would be digitized into an image memory at full 525-line resolution. The digital image would then be read out, several scan lines and pixels at a time, averaged, and converted back to an analog TV signal. The advantage of this technique is its stability. Hardware such as this often does not require any adjustment unless

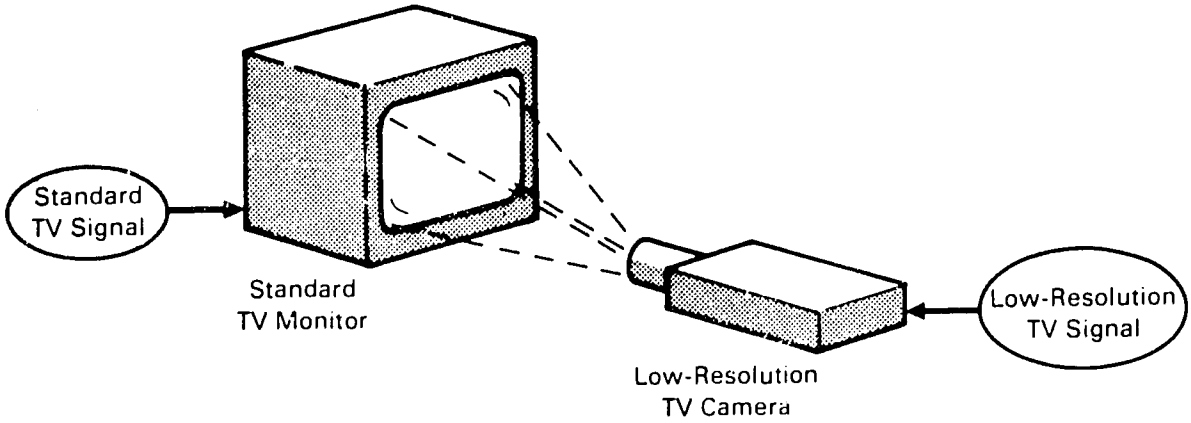

FIGURE 13. Standard Monitor and Low-Resolution Camera Setup for Low-Bandwidth Broadcasting

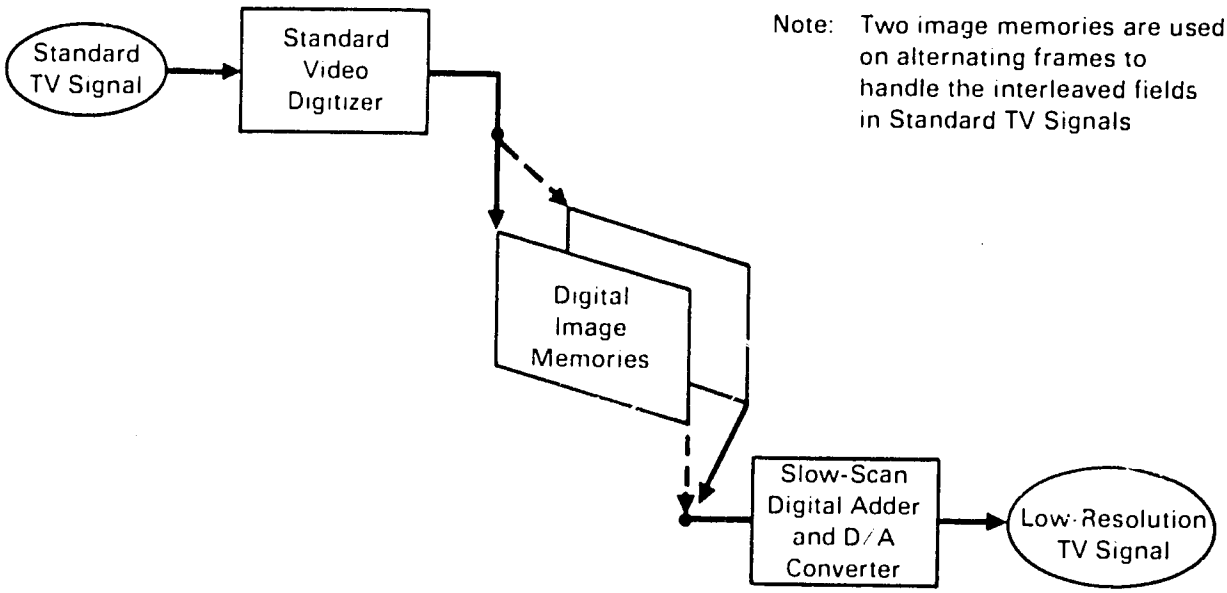

FIGURE 14. Digital Image-Processing Setup for Low-Bandwidth Broadcasting

it fails outright. Disadvantages are that this scheme would be relatively expensive, due to high-speed digital electronics and image memories; in addition, it would require more development than the camera/monitor scheme. The image-processing hardware required for this type of operation in real time is not commercially available.

Cheaper variations of the digital image-processing approach are possible at some loss in quality. For example, relatively inexpensive hardware can be built to "subsample" the TV image, selecting every Nth scan line and pixel to accomplish a factor of N reduction. Unfortunately, this approach is known to introduce a variety of unpleasant visual phenomena known generically as "aliasing effects" (Schachter 1983). It would be acceptable for a 2X linear reduction (4X bandwidth), but not for more extreme reductions. Averaging avoids these effects. Circuitry probably could be designed to process the image on the fly, by averaging only within a field instead of within a frame. This approach would be cheaper than using full-frame image memories as described above, and the quality would be acceptable. However, it would also require more development, as designs of this type are not found in the literature.

Considering all aspects, the monitor/camera approach is probably the best method for reducing video bandwidth and resolution. It is inexpensive, can be constructed from commercial equipment, and would perform nearly as well as the best digital solutions.

4.4 EFFECTS OF REDUCED BANDWIDTH ON IMAGE QUALITY

The literature contains very little material relating TV resolution to usability, so a series of evaluations were conducted specifically for this project. Broadcast TV images were reduced by 2X, 3X, and 4X linear magnifications (4X, 9X, and 16X reductions in bandwidth requirements). The image was reduced in two ways. First, a chain of monitors and cameras was used to process moving images, producing a videotape. Digital imaging techniques were then used to process a representative selection of still images from the same TV sequences. These images are shown in Figure 15. Both techniques produced similar results.

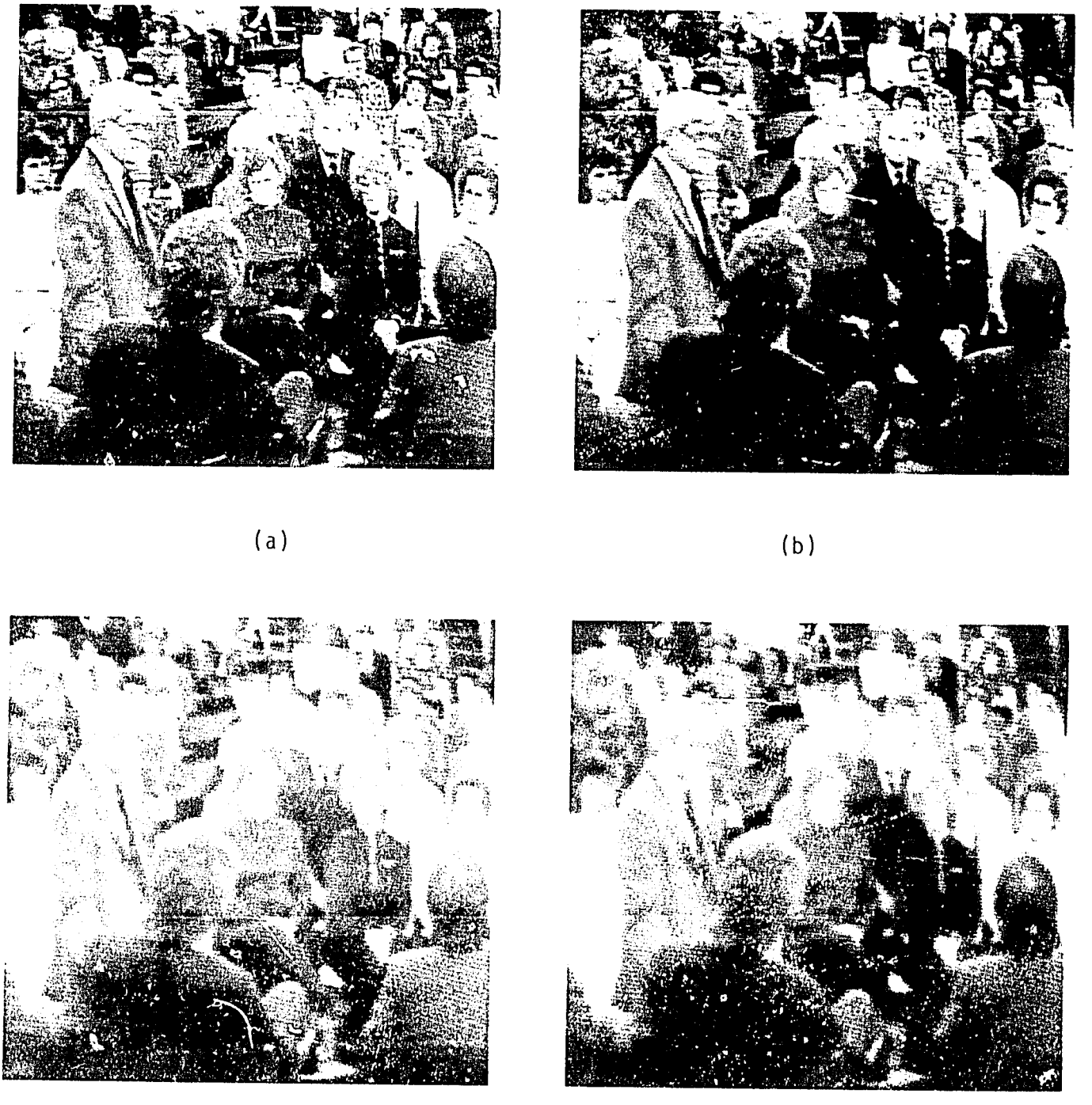

(a) (b)

(c) (d)

FIGURE 15. Effect of Reduced Resolution on Image Quality. In each set of four, image (a) is the original, (b) has resolution reduced by a factor of 2X, (c) by 3X, and (d) by 4X. These reductions correspond to bandwidth reductions of 4X, 9X, and 16X, respectively.

(a)

(b)

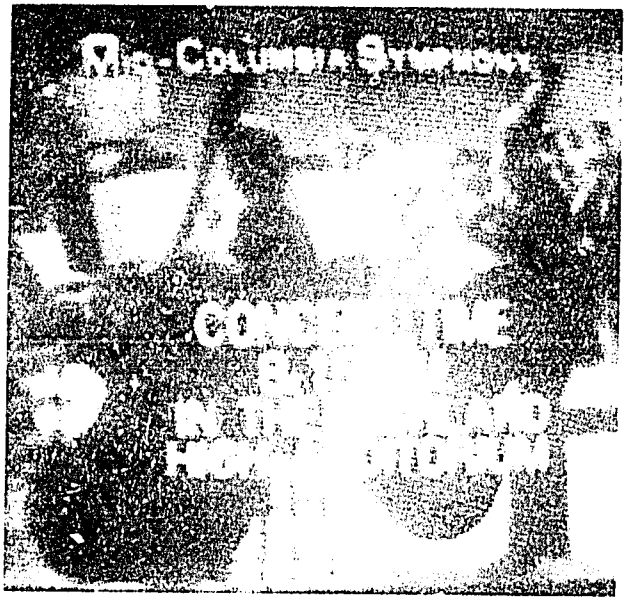

(c)

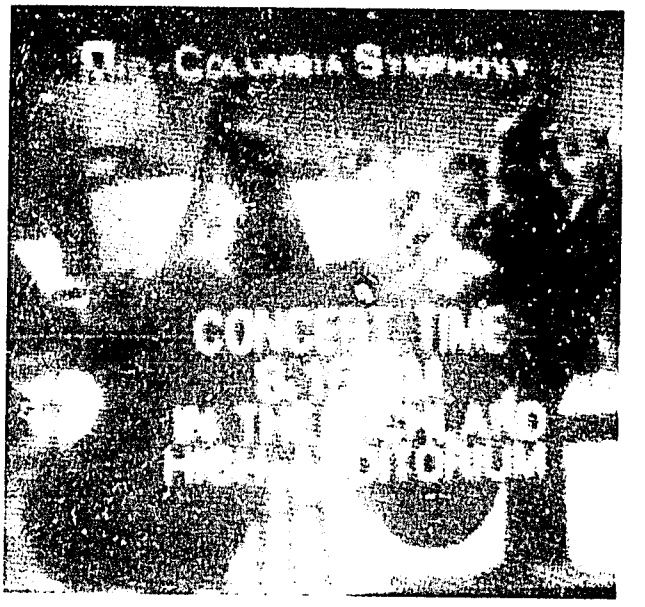

(d)

FIGURE 15. (contd)

(a)

(b)

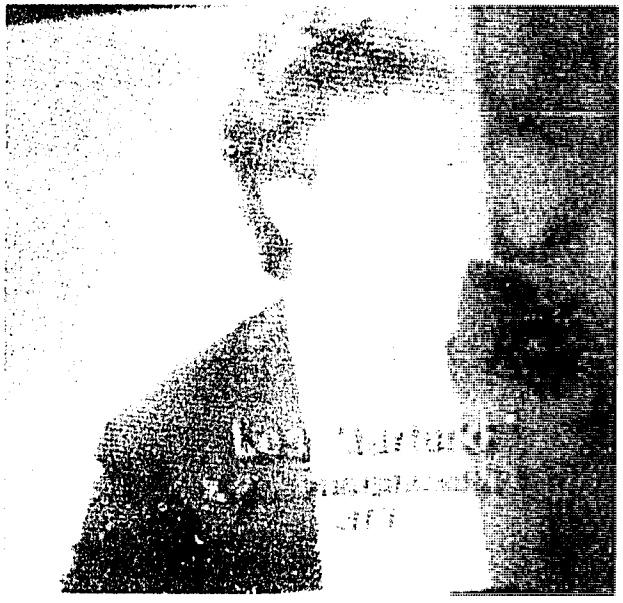

(c)

(d)

FIGURE 15. (contd)

(a)

(b)

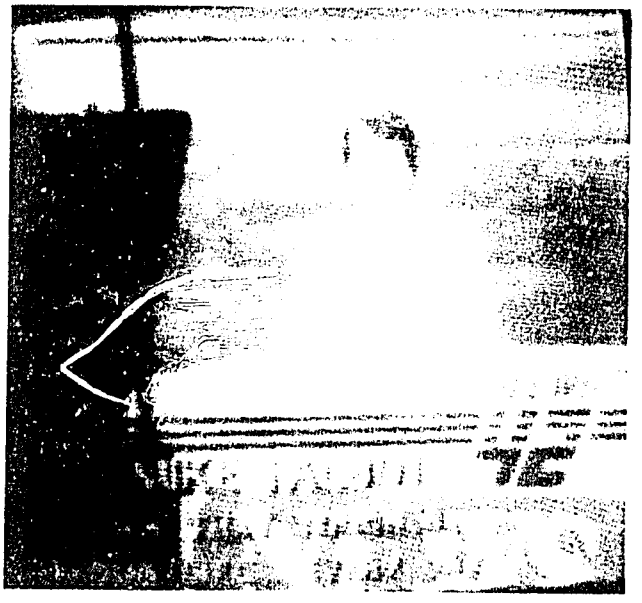

(c)

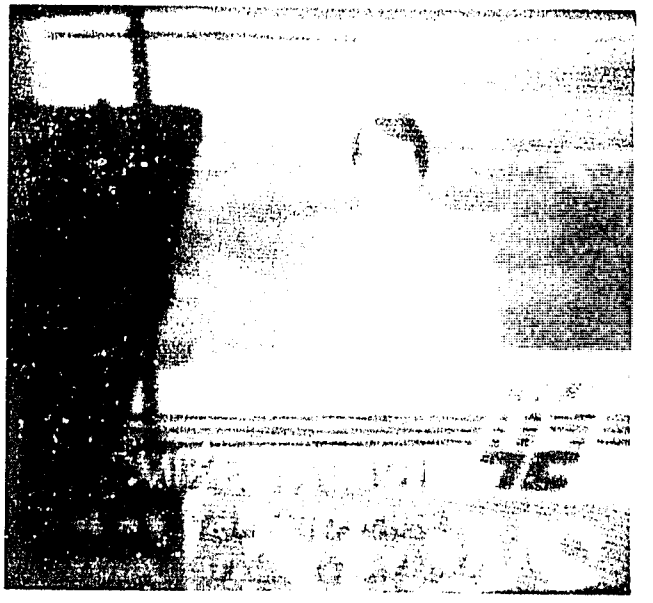

(d)

FIGURE 15. (contd)

(a)

(b)

(c)

(d)

FIGURE 15. (contd)

A 2X linear reduction causes very little loss in quality. All of the text remains easily readable and the images appear only slightly fuzzier than the originals in side-by-side comparisons. 3X linear reduction causes a significant quality depreciation. The images are noticeably fuzzy, and some text on a variegated background is difficult to read. 4X reduction is qualitatively similar to 3X, but is again somewhat fuzzier and more difficult to read in a side-by-side comparison.

The most important effect of reducing bandwidth and resolution would be that text becomes harder to read. We found that characters remained readable at all reductions provided that they were high-contrast on a uniform background and were at least 5% of screen height. However, current commercial broadcast practice uses characters on a variety of backgrounds and as small as 3% of screen height. These are readable with a 4X bandwidth reduction (2X linear), but not at more severe reductions. Program material can easily be made with larger, high-contrast characters, but this requirement must be accepted when the programs are designed.

A 4X bandwidth reduction, then, could be used with standard commercial programming, but more severe reductions would require specially produced TV program material.

5.0 TECHNOLOGIC DEVELOPMENTS THAT MAY AFFECT COSTS

5.1 GENERAL TRENDS IN CIRCUITRY AND ELECTRONIC DEVICES

The trend toward higher-scale integrated circuits has already been discussed. The impact of high-scale ICs on part counts and thereby on component costs and assembly costs will probably continue, and will eventually be extended to drivers in electrostatically deflected CRTs to continue incremental gains in integration and economics.

5.2 CRTs AND THEIR ALTERNATIVES

The type of display, whether a conventional CRT or one of the newer electro-optic alternatives, impacts many other design features. For example, CRTs are high-voltage, low-current devices; other displays use lower-voltage drivers. These choices thus influence power supply requirements.

There are a dozen display technologies that might eventually be used in television. The question is whether any of the emerging technologies will be practical for use in producing a low-cost television screen. The list of candidate displays can be narrowed immediately to three technologies that have the desired frame rate, brightness, and contrast:

- CRTs
- liquid crystal displays (LCDs)
- electroluminescent (EL) displays.

CRTs, the conventional picture tubes now in use, operate by scanning an electron beam across the phosphors on the inside of the picture tube. LCDs are composed of liquids sandwiched between electrodes that switch from clear to cloudy as an electric field is applied across them. LCDs are already widely used in digital watches and clocks; at present, however, LCD televisions are limited in screen size. EL devices, which are self-illuminating, emit light when an electric current is passed through them. By switching very small areas on and off, it is possible to form a moving picture. This technology is not fully commercialized as a video display approach, although EL night lights and panel lights have been used for many years. In the long run, black-and-white and color images with high contrasts and brightness may prove to be practical.

5.2.1 Patent Analysis

Patent analysis is the forecasting technique used here to assess the likelihood that CRT technology will be quickly supplanted by either electroluminescent or LCD technology.

From the standpoint of patent activity, EL displays will not become practicable in the near term. Figure 16 shows a downward trend in both filing and issuing EL-related patents; current technological interest does not appear to be focused on this type of display.

Patent activity in the LCD area is high and growing, as shown in Figure 17 and Table 9. The content of these patents suggests that two phenomena are involved:

- claimstaking, where the perceived potential of the new technology is being demonstrated and claimed
- problem solving, where specific drawbacks are being worked out.

A sampling of recent patents suggests that considerable technical variations are possible in the LCD patent area. This evidence supports the view that the research in this area is still exploratory, and that much more research will probably be conducted before there is substantial agreement on a list of truly dominant technologies.

The level of patent interest in LCD technology would suggest that LCDs will eventually be a major contender beyond the small-screen market. Large, flat TV screens have been a major technological agenda item since the virtual beginning of television. The large and growing LCD patent activity does not only pertain to TV, but to computer displays and diverse other applications. Technological transfer among these related areas will produce synergistic effects. Technical problems facing LCD technology include increasing screen size while maintaining resolution and contrast. Since the brightness of an LCD is a function of ambient light and contrast between picture elements (which are on or off), contrast and reflected brightness are interrelated. Display rate or frame rate problems will probably be solved by systematic research rather than by "breakthrough."

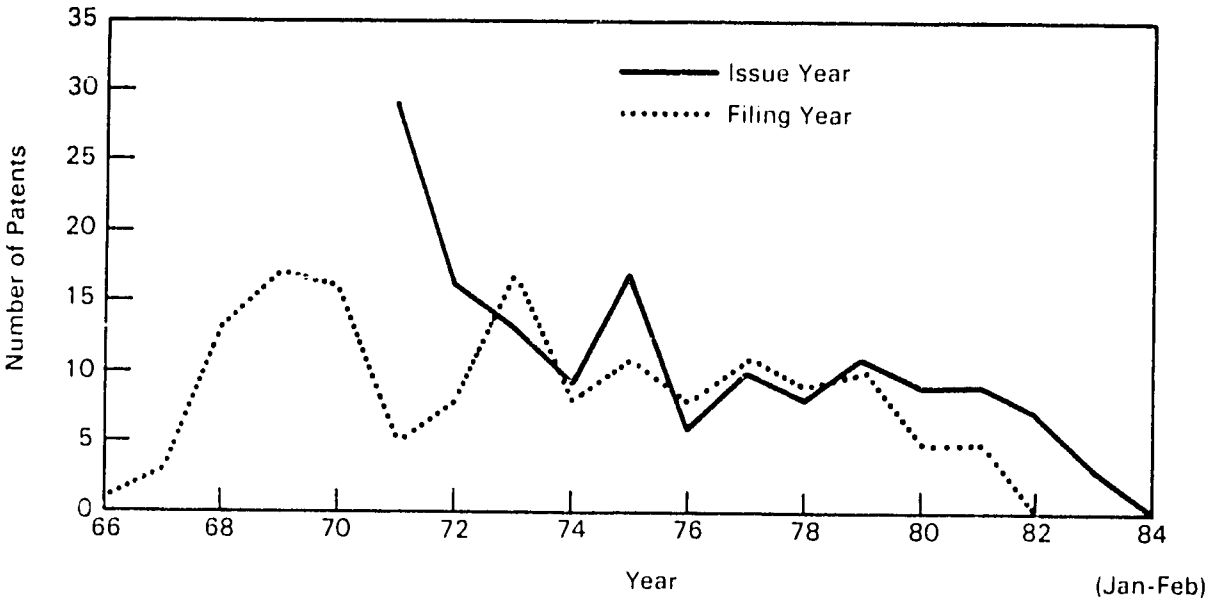

FIGURE 16. Patent Activity for Electroluminescent Devices

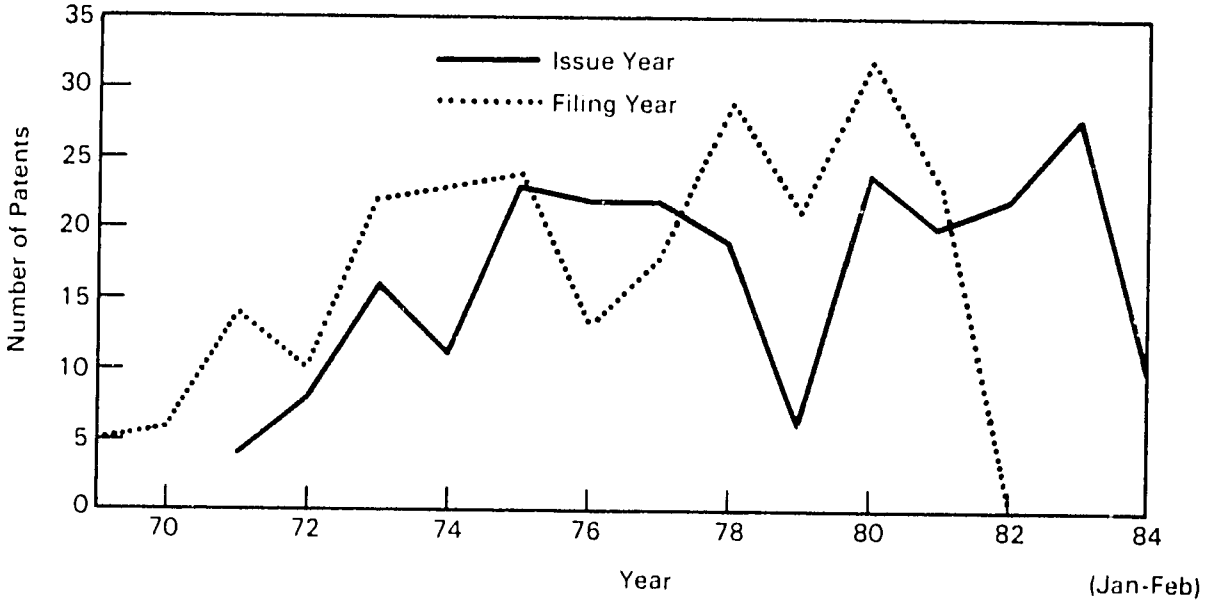

FIGURE 17. Patent Activity for Liquid Crystal Displays, Excluding Chemical Patents

TABLE 9. U.S. Patent Claims for LCDs (from ERIC data base)

Year	No. of Patents
1970	2
1971	6
1972	11
1973	30
1974	43
1975	59
1976	72
1977	57
1978	67
1979	30
1980	74
1981	86
1982	56
1983	101

The specific application of LCD devices to low-cost television in LCDs faces a particular problem that is not as important a factor in developed countries. LCD devices depend on ambient light to illuminate the image. For educational television operated only during the daylight hours, this is not a problem. However, the cost of evenly illuminating an LCD may be significant where artificial lighting is still a rarity. The provision of artificial light for LCD displays may equal the electrical consumption of the rest of the set.

A final problem with LCD displays is that they have narrow viewing angles; the image washes out if viewed from more than a few degrees off-axis. This limitation has obvious disadvantages for groups of people attempting to watch a single set.

Despite its near-antiquity in technological terms, the CRT remains an area of high patent activity, with a long-term growth trend. This stability in patent activity suggests that firms and inventors continue to see a market for improvements and are attempting to fill it. Table 10 shows this sustained interest in improved CRTs. This interest may express dissatisfaction with the CRT, but generally such a pattern of activity implies a technological vote of confidence. Since the scope or "basicness" of patents declines over time, high activity in an older technical area implies sustained economic importance.

TABLE 10. U.S. Patent Claims for CRTs (from ERIC data base)

Year	No. of Patents
1960	9
1961	8
1962	7
1963	25
1964	37
1965	166
1966	167
1967	204
1968	167
1969	241
1970	219
1971	332
1972	292
1973	307
1974	243
1975	260
1976	241
1977	205
1978	225
1979	151
1980	214
1981	237
1982	211
1983	204

From an initial analysis of patent indicators, we can expect that CRTs and LCDs will be technologically competitive for the foreseeable future. The present cost advantage of CRTs shows no sign of being overturned by any revolutionary improvement in LCD technology.

6.0 CONCLUSIONS AND RECOMMENDATIONS

The main conclusion to be drawn from this examination of the technology and economics of small, monochrome television receivers is that maximal benefit can be obtained in lowering costs by combining design simplifications with LDC manufacture to the greatest extent practical. Specifically, the optimal balance of actions would appear to comprise the following steps:

- Keep standardized formats for the present, making use of advances in solid-state circuitry to minimize components in the electronic portions of receivers.
- Simplify receivers by making them operate on a single channel, which may be a commonly used channel tuned with a fixed capacitor and trimming resistor or operated at the IF frequency.
- Make picture tubes by one of the approaches described in this report, selecting particular combinations of designs, materials, and processes based on the technologic infrastructure of candidate countries.
- Prepare cases from a balanced selection of materials and processes again based on local infrastructure.
- Stay with conventional transmitters and repeaters, which are available in a range of power ranges, for the main system of broadcasting standard format material.
- Add possibilities of localized receivers at the village level acting as master receiver/transmitter arrangements, translating signals from ground or satellite-based transmitters into cable-distribution or short range broadcast to simple, single channel receivers.

Barring new developments in specialized, VLSI circuits adapted to narrower, nonstandard bandwidths, it will be less expensive to stay with ICs now available for standard formats, rather than to substitute larger numbers of discrete components for simplified designs.

It would appear that television receivers that use simplified designs and LDC manufacture of key elements such as picture tubes can be made at costs on the order of $15 or slightly less. Unless additional developmental work is done, it seems unlikely that these costs can be substantially lowered.

Although it has been beyond the scope of the current investigation, it seems clear that prohibitive tariffs on imported electronics play a major role in driving up costs. Receivers that retail in the United States for substantially less than $80 may cost upwards of $400 in many countries. Using this study as a kind of technologic baseline for methods to reduce costs, the next phases of work might profitably emphasize assessments of existing infrastructure in a range of countries, aiming toward a series of planned moves in the introduction of television manufacturing in these countries. In parallel, drawing from the basic approaches described in this report, designs and materials may be selected or adapted to meet the particular mixes of technical strengths in recipient countries.

Particular types of applied R&D or other exploration may be useful in a number of key technical areas. These include the identification of glass and sealing solder combinations to use with low-cost sheet materials for certain types of metal funnel picture tube designs; identification of suitable pumping techniques for LDC settings, perhaps using sorption pumps of recyclable materials in addition to mechanical roughing pumps; identification of available materials and techniques for getter preparation; and creating some open art and/or science in the preparation of cathode coatings. There are, beyond these known activities, a wide and variable range of choices to be made in approaches to the electronic design and assembly of receivers in LDCs.

The present study has emphasized television receiver designs that minimize power demands. The research has not specifically included power supplies for receivers. This in part reflects a sharp decrease in attention to alternative, freestanding energy sources of LDCs, and the resultant lack of small-scale power supply options. This is particularly true of power generation/storage hardware on a scale useable by individual households in LDC rural areas. As the technology of communication spreads, including but not limited to television, the modest power requirements may be added to a growing list of warrants

for the extension of power to rural populations, and included as a factor in more holistic approaches to extending power infrastructure.

Since we now recommend staying with standard format television, compatible with existing broadcasting activities, we recommend that urban television systems stay with extant technology, with respect to the use of both existing transmitters and grid power. Although lower-cost receivers might be added to this mix, it may be as appropriate to consider communal centers, equipped with conventional, larger-screen receivers. This recognizes the difficulty street people and bustee residents have in keeping private property. their absolute poverty, and poor access to grid electricity.

The primary expected output of evolving or identifying appropriate technology for television receiver manufacture in LDCs is to sharply reduce the cost and hence substantially improve the availability of such products. Through combinations of private sector purchase, multiplication of numbers of sets that can be procured through governmental programs and creative financing schemes, the distribution of television receivers could be made broader. Given this accomplishment, the usefulness of programming for educational, informational and entertaining purposes would also be enlarged.

Adoption of a new industry, such as electronic goods manufacture, and the accompanying supportive jobs surrounding it, diversify and strengthen the economy. These types of import substitution activity, even in the face of considerable time and difficulty in learning technology, have generally served the LDCs well, and have tended to improve the quality of life through general rises in productivity and income.

Television has the unique advantage of being both a technology and a medium of communication for spreading knowledge, information, and understanding. Making the technology indigenous, rather than merely imported, carries many social benefits beyond the obvious economic ones.

On the balance, we recommend that this work be continued and extended to an interactive assessment of technologies and cultural settings in the four

major U.S. AID regions, favoring countries already participating in the Rural Satellite Program, or otherwise importantly involved through bilateral agreements in using communication and technology transfer to foster development.

7.0 REFERENCES

Consumer Reports. 1954-1983. Consumer's Union of the United States, Inc., Mt. Vernon, New York.

Papanek, V. 1972. Design for the Real World. Random House, New York.

Schachter, Bruce J., ed. 1983. Computer Image Generation. John Wiley and Sons, New York.

APPENDIX A

SPECIFICATIONS OF CURRENTLY AVAILABLE HIGH-SCALE INTEGRATED CIRCUITS FOR USE IN MONOCHROME TV RECEIVERS

APPENDIX A-1

MOTOROLA MC13001

MOTOROLA
Semiconductor Products Inc.

AN-879
Application Note

MONOMAX — APPLICATION OF THE MC13001 MONOCHROME TELEVISION INTEGRATED CIRCUIT

Prepared by
Ben Scott
Technical Consultants:
C.I. Tsui, Hong Kong
Peter Bissmire, Geneva
Lowell Kongable, Phoenix
Mike McGinn, Tempe

This application note presents a complete 12" black and white line-operated television receiver, including artwork for the printed circuit board. It is intended to provide a good starting point for the first-time user. Some of the most common pitfalls are overcome, and the significance of component selections and locations are discussed. The design has only 4 factory adjustments: H. Hold, Height, AGC Delay, and V. Linearity, and there are no alignments.

Note that while this discusses MC13001 (525 line, positive tuner AGC) there are also parts for 625 line and negative tuner AGC, in all combinations.

INTRODUCTION

Monomax has been on the market since mid-1981. It was originally developed in a joint effort between Zenith and Motorola for the purpose of creating a high performance B&W receiver. It was intended for all types of monochrome receivers, including the demanding portable and mobile applications, which require immunity to noise, "airplane flutter" and multipath signal conditions. Features suggested by these requirements included: noise filtering and cancelling, dual-loop horizontal PLL, countdown vertical, and a flexible AGC system.

It was also required that the resulting receivers be low in component and manufacturing cost. To meet this objective, effort was made to minimize external components (especially precision components) and adjustments.

Above all, the receiver was to be reliable, so the chip was designed to operate at low voltage and low dissipation. Special attention was given to ESD (electrostatic discharge) immunity on all pins. An extremely stable horizontal oscillator was devised.

Additional features which resulted from this design effort included: a completely integrated IF and detector with no detector tuning or external filtering components, an on-chip dc contrast control which permits remote location of the control without shielded cable, and fully black level clamped video with blanking and beam current limiting. The combination of system functions in the Monomax chip permitted some elegant solutions which would not have been practical or economically feasible in more conventional designs.

It is not the purpose of this AN to describe the overall Monomax chip in any greater detail than is required for understanding receiver design decisions. The reader is urged to obtain a copy of the MC13001 data sheet available from Motorola Literature Distribution or Linear Applications. It contains some of the basic

MONOMAX is a trademark of Motorola Inc

© MOTOROLA INC., 1983

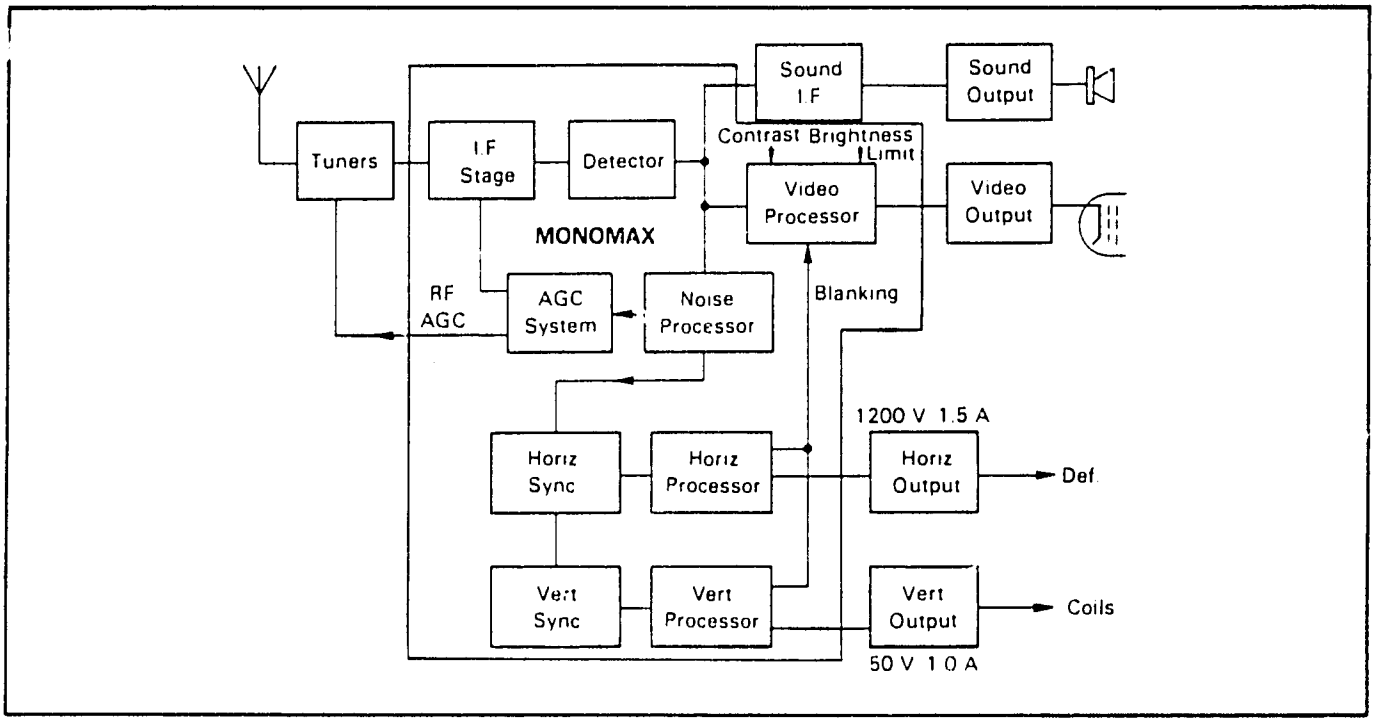

FIGURE 1 — Simplified Block Diagram

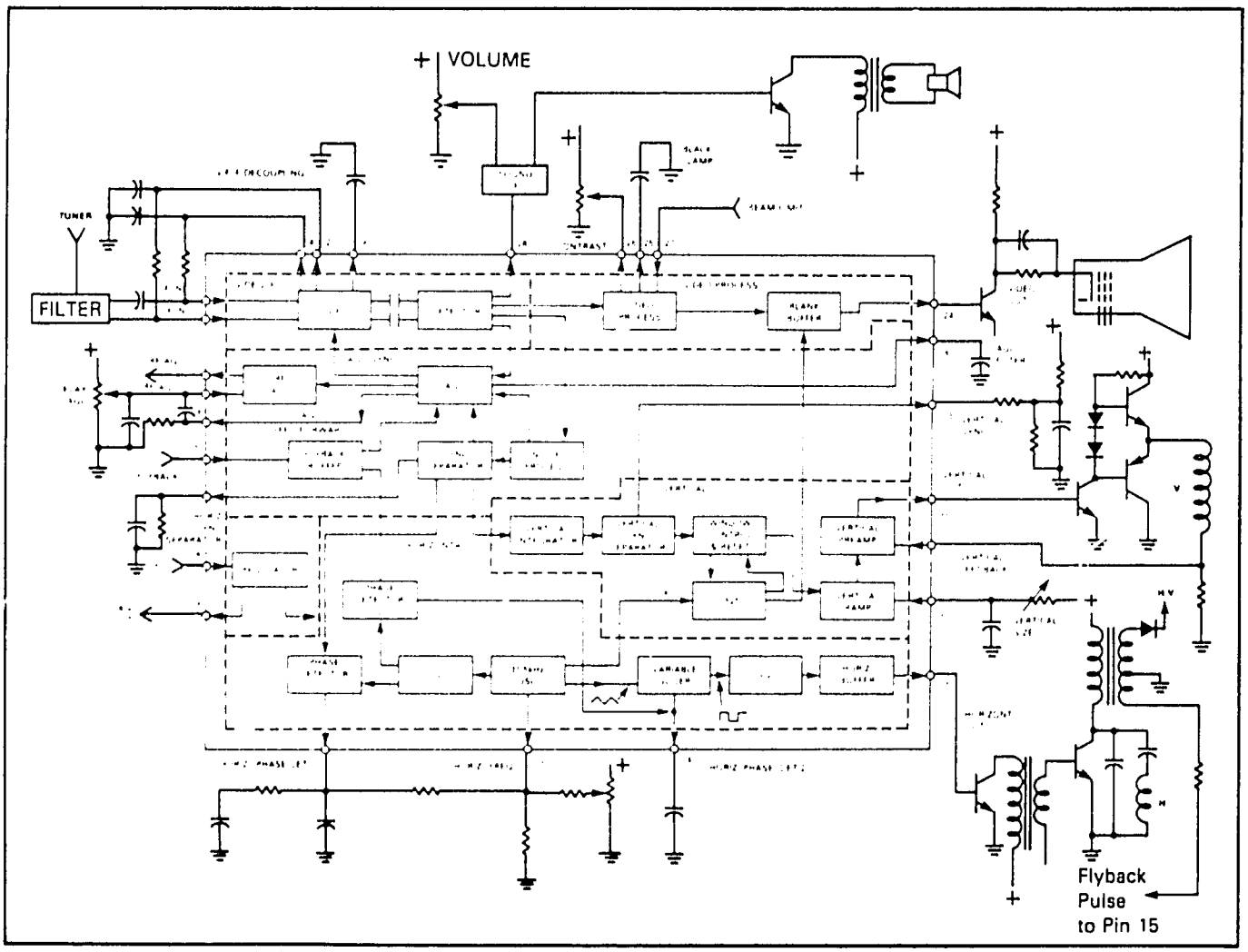

FIGURE 2 — Monomax Functional Block Diagram

application information which will not be repeated in this note. Also recommended is a paper entitled "Monomax — An Approach to the One-Chip TV" by Gerald Lunn and Mike McGinn of Motorola. This can be obtained from the proceedings of the IEEE Chicago Spring Conference on Consumer Electronics, June, 1981, or from Linear Applications, Motorola.

Monomax is not difficult to apply. A functional TV set is virtually assured on the first try. But as anyone closely associated with television design can attest, there are in every new design, a number of small but objectional problems which stubbornly resist solution. The receiver described here does not represent the "last word", but it is pretty close to production quality, and it includes solutions to some of the most common beginner's problems. In the following text, an attempt will be made to explain component value choices and locations in terms of problems solved or behavior avoided, so that the future experimenter will be alerted.

THE BASIC DECISIONS/POWER SUPPLY

One of the first considerations in a new TV design is whether the set is to be ac/dc (12 Vdc operable) or ac line only. Monomax fits well into either, and has been used in production designs of both types.

Figure 3 shows the architecture of an ac/dc type with all systems operated from 12 Vdc. In this case, the horizontal output stage is of the "boost" type, to minimize horizontal deflection current and make the yoke easier to manufacture. The flyback transformer contains auxiliary windings which provide supply voltages for the video output, picture tube grids, and vertical deflection. Sometimes the boost voltage of 20 to 30 Vdc is used as a power supply for the vertical output. The audio output section is usually a Class B type, operated directly from 12 Vdc. An IC combining the sound IF, detector, and audio output is ideal in this architecture. TDA1190 is an example which fits well with Monomax.

Figure 4 shows the basic power supply structure for the ac line operated type of design. This is the most economical and the most common approach for B&W television in most of the world, and it is the subject of much of this AN. Special thought was given to this type of set in the design of the MC13001 itself. Note that the horizontal oscillator and driver are supplied through high value resistors directly from the rectified power line dc (120 V). Only 4.0 mA are needed into Pin 18 to power the horizontal oscillator system. The balance of the horizontal circuit is also line operated so it is fully operable from the line supply. The horizontal section then produces the 12-14 Vdc for the rest of Monomax (50 mA), and for the tuners, the sound IF, the vertical output, etc., about 150 mA in all. This method avoids the problem of developing 12 Vdc directly from the line; i.e., the waste of power in a linear approach, the extra components for a switch-mode dc-dc converter, or the cost of a line transformer. As in the previous example, the TDA1190 can be used for the entire sound system, but many designers prefer to use a Class A, line operated, discrete output stage, and one of the standard sound IF detector ICs, such as MC1358, CA3065 or TBA120. This removes the 12 V supply ripple caused by loud low-frequency audio passages, but costs a small audio output transformer. This is the approach presented in the complete receiver in this AN, but it could be easily changed to the single-chip sound system.

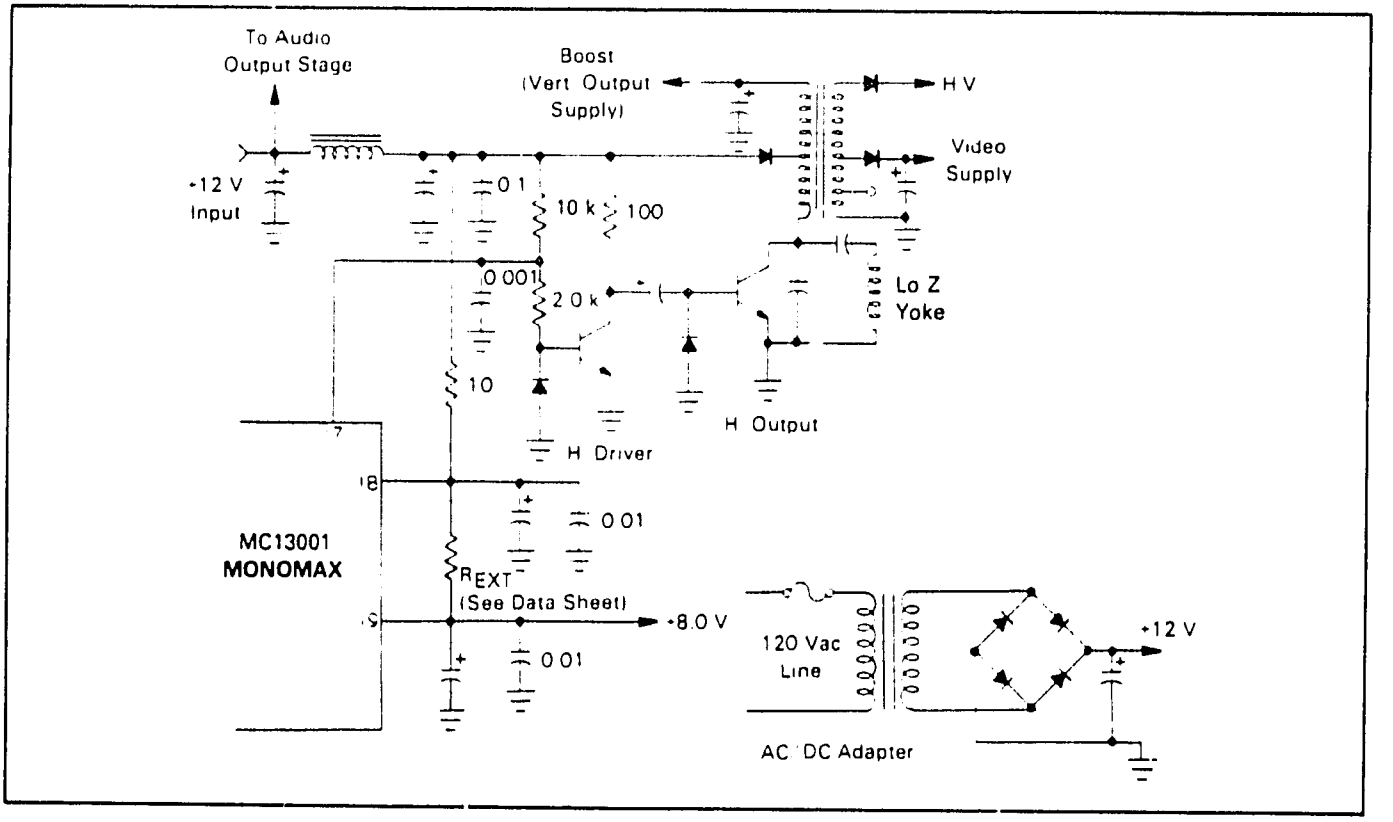

FIGURE 3 — Basic AC/DC Architecture

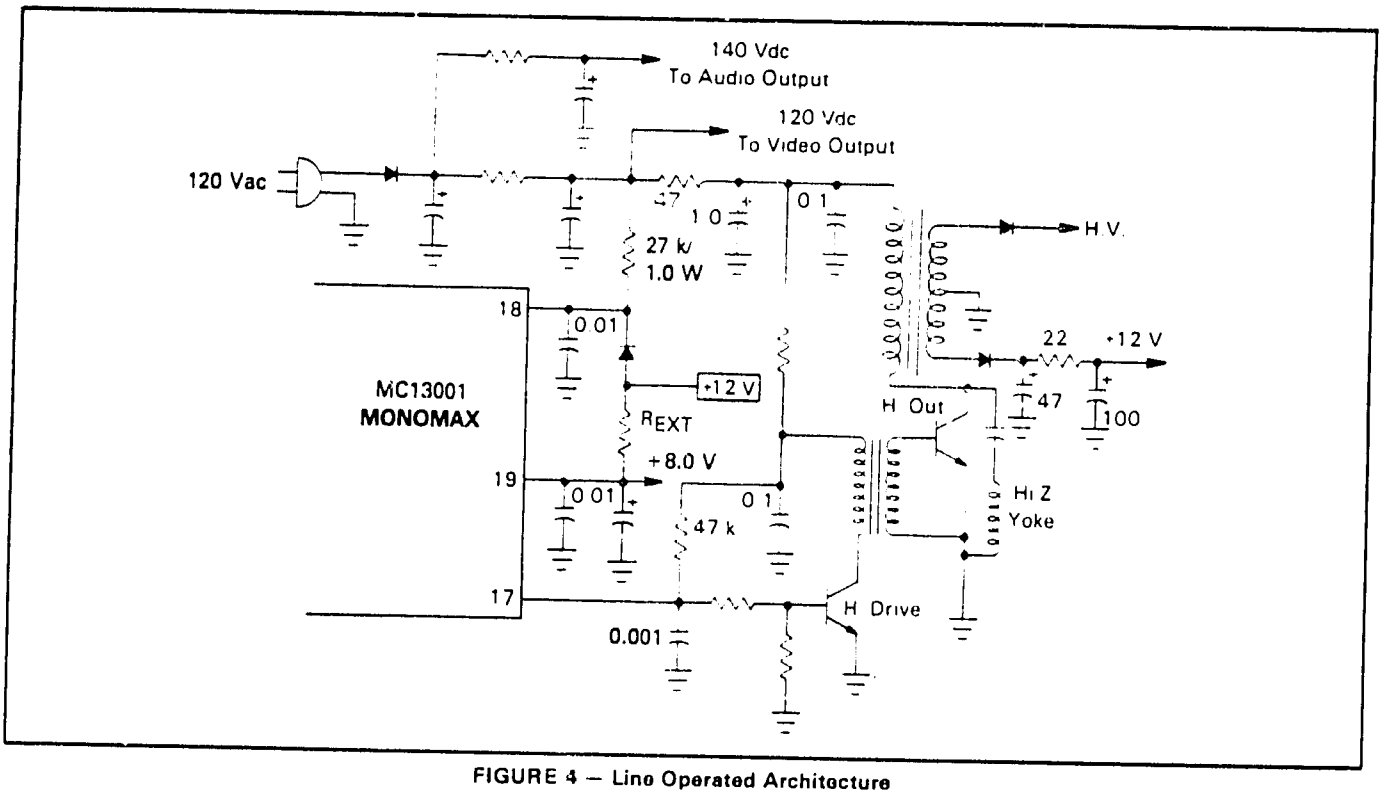

FIGURE 4 — Line Operated Architecture

It is important to use good bypass techniques on all power supplies, not only for low frequencies, but also for RF. It is critical in prevention of faint but objectional vertical lines in the picture, caused by horizontal deflection system waveforms getting into the supplies. Good high-frequency bypasses on Pins 18 and 19, with respect to Pin 16, are essential.

THE IF

The four stage IF in the MC13001 has 80 μV sensitivity, sufficient for excellent overall performance when used with an ordinary tuner and a conventional L/C input bandpass network. It is recommended that the input always be used differentially to reduce the possibility of feedback problems. The differential input capacitance decreases from its normal 5.0 pF, to about 2.0 pF, in the top 10 dB of gain-range of the IF. This can be used to narrow the input L/C filter, at very weak signals, to reduce overall detected noise, and improve picture lock.

If a SAW (surface acoustic wave) filter is used, as in this AN, the above bandpass "walking" technique cannot be used. Furthermore, if a SAW filter is used, an additional fixed gain-preamplifier is needed to overcome the 20 to 25 dB loss thus imposed. Nevertheless, this approach has become increasingly popular with the introduction of low cost SAW filters, because it eliminates a crucial and time consuming production alignment.

There is a steadily increasing supply of SAW filters in the marketplace, so some criteria for choosing the best one for the design are in order. Bear in mind that all of the video selectivity is concentrated in the tuner and the IF input filter in this design. In a B&W receiver, it is important to obtain a good compromise of picture and sound quality with a single selectivity channel. This means keeping color and sound subcarriers low enough to avoid 920 kHz beat generation in the detector, and yet not attenuating the sound so deeply that good sound quieting is irretrievably lost. A well-proven characteristic for achieving this goal is as shown in Figure 5, taken from tuner-mixer input to detector. Of this, some selectivity comes from the mixer-tuned circuits, but most of it is provided by the SAW filter.

Table I shows some available types, data normalized to 0 dB picture carrier. The major difference is the depth of 41.25 MHz. In this regard, the Toshiba F1032U, Kyocera, and the muRata parts are best for B&W design. The mixer-tuned circuits will supply the

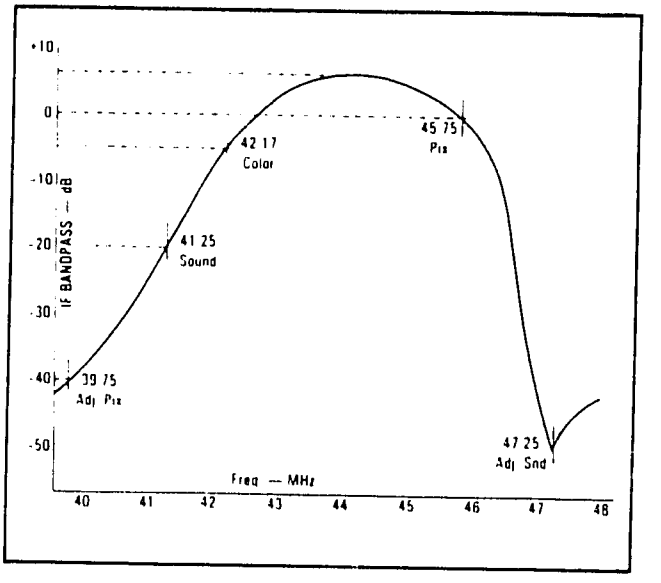

FIGURE 5 — IF Bandpass Characteristic

TABLE 1 — Some Available SAW Filters

Relative Response	Toshiba				Kyocera	muRata
	F1032B	F1032U	F1032V	F1052	KAF45MR-MA	SAF45MC 027
39.75 Adjacent Picture	-40	-48	-45	-40	-37	-37
41.25 Sound	-12	-16	-6.5	-25	-18	-19
42.17 Color	+1.0	0	0	0	0	0
Peak	+4.0	+4.0	+4.0	4.0	4.0	4.0
45.75 Picture	0	0	0	0	0	0
47.25 Adjacent Sound	-45	-48	-47	-40	-42	-38
Insertion Loss	-18	-19	-18	-21	-23	-20

additional slight amount of narrowing required. The F1032V part is too wide, and F1052 is too narrow. These are intended for color receiver architectures of different types. The SAW manufacturers loading recommendations should be adhered to closely to prevent ghosts (before and after the picture) caused by capacitive feed-through and or "triple transit" reflections.

At the input of the MC13001, it is important to use good bypass capacitors on Pins 2, 4 and 6 with respect to Pin 1 of the MC13001. The best value was found to be a straight lead, low-inductance 0.02 μF disc ceramic for reducing the infamous channel 6 beat. Pickup in this area is also a possible source of vertical scan bars in the picture caused by horizontal sweep currents. It is desirable to keep the SAW filter close to Pins 1, 2, 4 and 6. See the PC board layout Figure 14. Also, the IF preamplifier must be kept compact and well grounded to prevent feedback and oscillation with the tuner.

AGC

The AGC system was implemented here essentially as described in the Data Sheet, including the AGC speed-up capacitor between Pins 9 and 10. This keeps the AGC airplane flutter response time fast, even when the signal is strong enough to move the AGC into the tuner control region. The RF AGC delay setting is one of only 4 factory adjustments. Ideally it should be made with a calibrated signal level, but acceptable results can be obtained with a strong off-the-air signal and a switch type attenuator. A discussion of this adjustment is contained in Appendix I.

Remember that AGC loops have a large amount of gain, and fast AGC loops, with good airplane flutter performance, are especially vulnerable to deflection currents. Only a few millivolts on the AGC lines from stray fields or ground loops can cause a significant "bar" in the picture. Keep the tuner AGC lead away from yoke leads. The small bypass capacitor on Pin 11 further reduces this problem, and should be placed as close to the MC13001 as possible.

Monomax was designed so that in the strong signal region, "above the delay", the IF gain is held constant while AGC acts upon the RF stage in the tuner. This means that a small amount of IF AGC range may not be accessible in the normal implementation. Optimum setting of the delay pot keeps the RF section at maximum gain for RF signal levels of from <10 μV to 1.0 mV_{rms}, using 40 dB of the IF AGC range. The tuner is not likely to be able to provide more than 40-46 dB of additional AGC, which will accommodate signal levels up to approximately 200 mV_{rms}. This is adequate for the Monopole antenna applications, but certainly doesn't offer a lot to spare. Above this level, the AGC system loses control, the receiver overloads and eventually falls out of sync. One way to improve this, and pick up the remaining 6.0 dB or so of IF AGC capability, is to put a resistor from Pin 11 to Pin 10. The value of the resistor will be about 33 k for delay resistor values shown, but will have to be tailored to the particular tuner used. This can also be accomplished by a resistor from Pin 9 to Pin 10. This, in fact, is the only solution in parts providing negative tuner AGC.

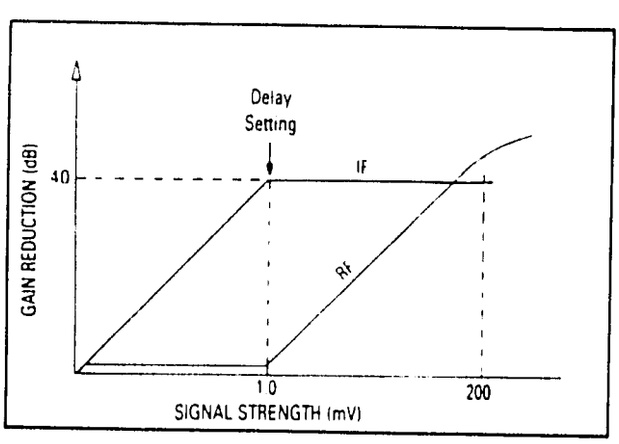

FIGURE 6 — Monomax AGC Behavior

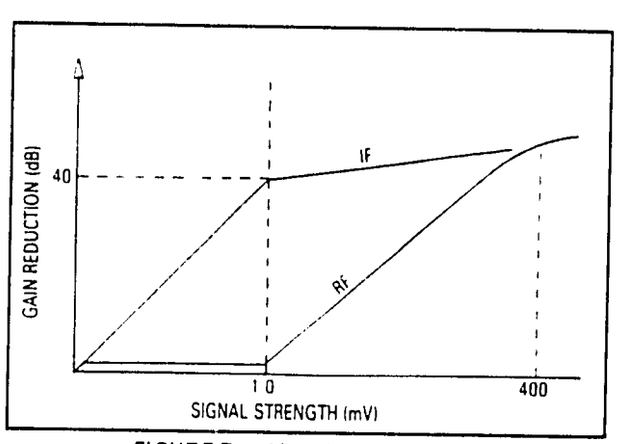

FIGURE 7 — Modified AGC Curves
(Resistor from Pin 11 to Pin 10)

THE SYNC SEPARATORS

Composite sync is stripped from noise-cancelled video in a peak detecting sync separator, as shown in Figure 2. The time constants for setting the slice level of the detector are connected at Pin 7. As always, there is the compromise between optimum noise immunity and tilting of the slice level during vertical interval. For best horizontal separation, a short time constant is required. There is also an AGC anti-lockup system which responds to the voltage at Pin 7. It also requires a short time constant. A second, longer time constant can be diode connected to the same pin, to prevent too much charge-up during the vertical interval.

Composite sync is subsequently integrated internally and fed to another amplifier whose emitter is brought out at Pin 23. Satisfactory vertical sync can be obtained (internally) by simply connecting Pin 23 to a divider. Weak signal performance can be improved by using an RC network on Pin 23 to make the separation self compensating, as in the horizontal separator. Also AGC from Pin 9 can be fed to Pin 23 to improve airplane flutter vertical hold.

FLYBACK INPUT

The only flyback pulse input to the MC13001 is at Pin 15. It takes care of keying the AGC, blanking the video output stage, and phase locking the horizontal system. The Pin 15 input is a base-emitter junction, with a reverse polarity diode for protection. The input requirement is for a negative-going pulse of 0.6 mA, but it is best to choose a pulse voltage and series resistor to give about -2.0 mA peak. This will make the effective width be the pulse width near its base.

HORIZONTAL OSCILLATOR/AFC

Monomax contains a really unique group of features in this area: dual-loop; variable-loop-gain (bandwidth) on the first (sync) PLL; externally adjustable phasing in the second PLL; simple flyback pulse input, requiring no ramp generation. These are described in detail in the data sheet, and will not be repeated here.

Shown in Figure 8(a) are the first PLL components as presented in earlier publications, and in 8(b) a new variation which has been implemented in this receiver. This very simple change retains the dual time constant on the phase detector. The improvement is the 13 k/22 k divider which sets a 5.0 V point for the return of the longer time constant filter. Since 5.0 V is the reference level in the oscillator, it is also the operating voltage at Pin 12, and at Pin 13 when in-lock. The benefit, then, is that the 0.47 μF doesn't have to charge up, so there's very little frequency pulling during power-up or power-down. This reduces audible chirps and momentary stresses due to long cycles on the horizontal output device. Also the picture locks-in quickly, which is highly desirable with fast warm-up picture tubes.

Note that the proper setting of the horizontal hold control occurs when no average current flows through the 390 k resistor, either to, or from, the oscillator. A simple alignment procedure is to set the average Pin 12 to Pin 13 voltage to zero by adjusting the hold control, when locked to a standard broadcast signal, using a high impedance voltmeter.

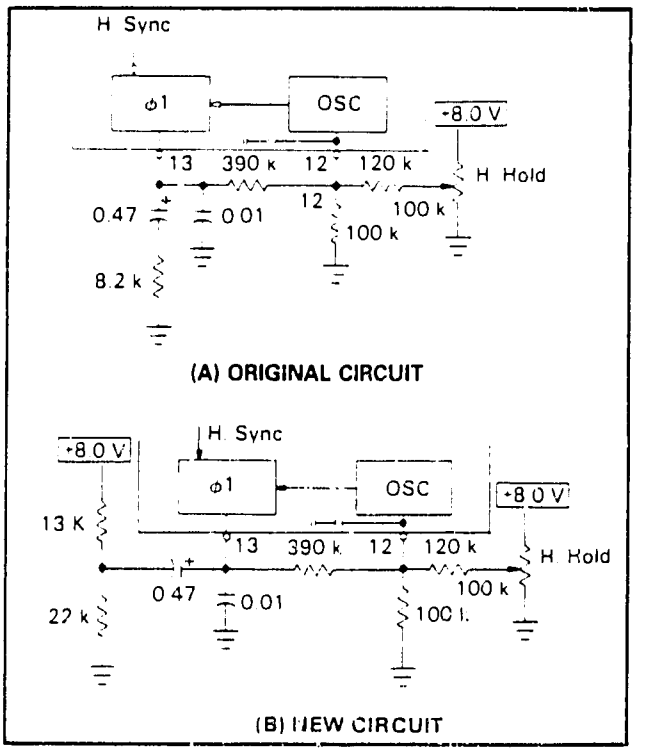

FIGURE 8 — Horizontal Phase Detector

The second horizontal phase detector compares the flyback output phase with that of the oscillator, and develops a proportional dc voltage, which is filtered at Pin 14. This dc voltage then sets the slice level on the oscillator ramp to produce the output timing desired. See Figure 9(a). Picture phasing can be adjusted slightly by a high value resistor on Pin 14 to +8.0 V or ground. A 220 k to +8.0 V will move the picture about 2.0 μs to the left. A 220 k to ground will move it 2.0 μs to the right.

Another application of Pin 14 provides a method of changing the duty cycle of the horizontal output waveform from Pin 17. Normally, the desired waveform would be 50%. This has been assured in the MC13001 by operating the slicer at 31.5 kHz. This permits output phasing correction **without** changing duty cycle, as shown in Figure 9(a). In some receivers, when large amounts of dc power are drawn from the flyback, the "on" time of the horizontal output may have to be more than 50% of the cycle. This can be accommodated by feeding back some driver collector signal to the second phase detector filter, as shown in Figure 10. This imposes alternate slice levels and hence, the desired change of duty cycle. Some tentative values for a set configured like the one in this AN are given in Figure 10. This was not actually used in the final design, because it wasn't needed. It is supplied here as a reference for future designs having more power drain from the horizontal output. Bear in mind that the driver collector voltage would be much lower in the 12 Vdc receiver architecture mentioned earlier, requiring much different values to implement this idea. A practical limit of control by this technique is about a 60/40 duty cycle. The 0.001 capacitors on Pin 17 and the driver base are to "soften" waveform edges, to reduce their radiation into signal circuits.

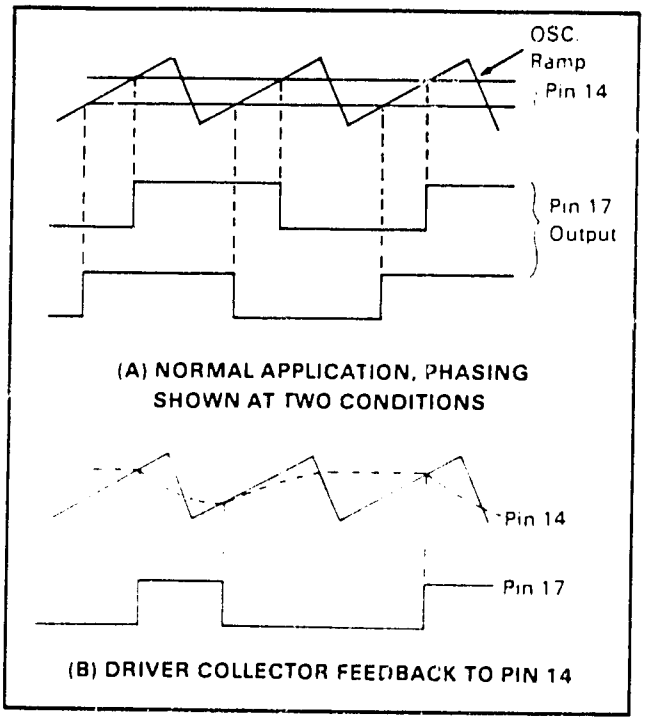

FIGURE 9 — Second Phase Detector Slicer

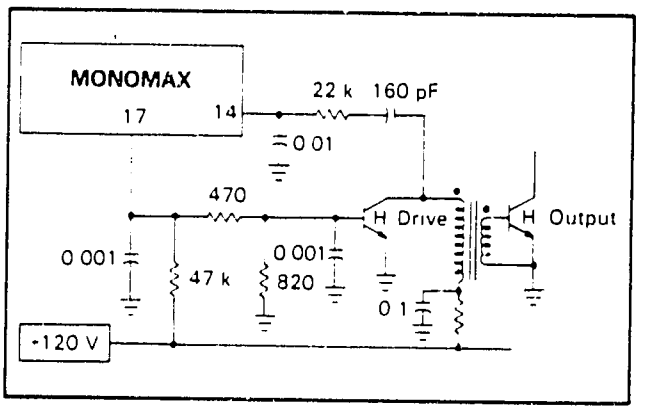

FIGURE 10 — Driver Feedback For Extended Horizontal Output "On" Time

THE VERTICAL SYSTEM

Aside from all of the sophistication of the count-down vertical system within the Monomax chip, what remains to be accomplished outside of the device is fairly conventional. At Pin 20, there is an external capacitor, charged from a high voltage, to produce a good linear ramp. It is discharged within the chip, usually by vertical sync, but sometimes by the count-down circuit when sync is momentarily absent. It is important for the capacitor to be a good stable low ESR type and to be located close to Pin 20 and grounded as closely as possible to Pin 1 to avoid pickup of horizontal sweep which could hurt interlace.

The approximately 1.5 $V_{p\text{-}p}$ waveform on Pin 20 is inverted and buffered to Pin 22 to drive the external output circuit. In the receiver design in this AN, a fairly conventional vertical output stage has been used. An optional linearity control has been added, because many customers like to have one, but also because it permits using a smaller coupling capacitor for the yoke. The smaller coupling capacitor saves money and reduces picture bounce, but introduces some curvature which must be compensated. Feedback to Pin 21 provides overall output stage linearization and prevention of deflection current change with temperature. It is also a handy place to feedback a variable parabolic waveshape for linearity control, as shown in Figure 11.

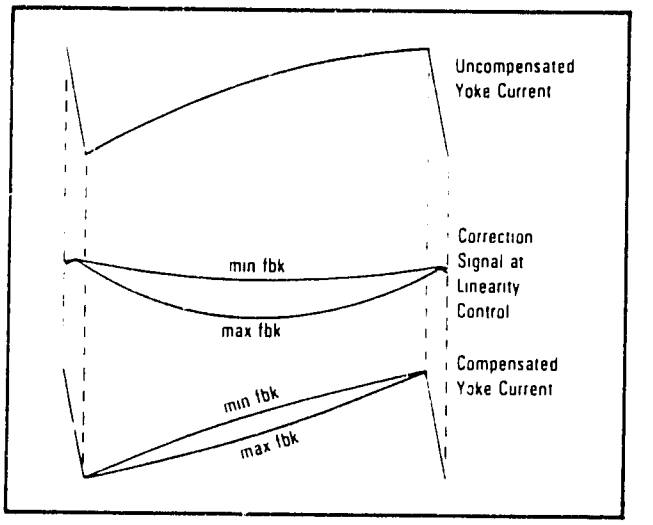

FIGURE 11 — Vertical Linearity Control

THE SOUND SECTION

The buffered video detector output at Pin 28 is a wideband signal used for sound take-off. A ceramic sound take-off filter and detector "tank" were chosen to eliminate alignment steps. The MC1358 is a popular, multi-sourced, FM IF, detector and dc volume control. It can be used with conventional L-C circuits or the ceramic devices shown here. The L-C application costs less in piece parts, but has a higher manufacturing cost in assembly and alignment.

Keep in mind that a limiting IF produces a wide spectrum of 4.5 MHz harmonics. The sound IF grounds should be kept together and returned to Pin 1 by a single path as shown in the copper layout of Figure 14. Also it is a good idea to keep the input of the sound IF IC close to Pin 28 to reduce radiation of video IF harmonics, generated in the video detector, from getting back to the tuner or IF input.

In the receiver described here, an ac volume control has been used. A potentiometer is placed between the MC1358 detector output, Pin 8, and the post amplifier input, Pin 14. The dc volume control, Pin 6, is grounded for maximum volume. If the volume control is to be mounted some distance away, and deflection pickup is likely, then the dc volume control could be the better choice. This can be done by ac coupling Pin 8 to Pin 10, and placing a variable 50 k pot from Pin 6 to ground. The disadvantage is that the control contour is less predictable in the dc control configuration. It is, nonetheless, a production proven method.

THE VIDEO OUTPUT

Pin 24 provides up to 1.4 V, black-to-white video drive, black level clamped, with a widened and amplified blanking pulse added. This is sufficient to drive a single stage common-emitter video output transistor. A dc voltage of 0 to 5.0 V applied to Pin 26, varies the black-to-white amplitude at Pin 24 from 1.4 V to 0.1 V without changing the absolute black level of the output voltage. Beam current limiting can also be used to control maximum brightness. This is accomplished by circuit shown in Figure 12. As beam current increases, the H.V. winding current flowing in the 39 k resistor, pulls the Pin 27 voltage down. When Pin 27 falls below about 1.0 V, the contrast begins to be reduced. This circuit was not used in the complete receiver in this AN, for reasons which will be explained shortly.

The black level clamp capacitor on Pin 25 is usually shown connected to ground. It can also be connected to +8.0 V to cause the screen to be blanked for about 1 second after turn-on. This permits the scan systems to stabilize before the picture becomes visible. Note: If the brightness control design window is set too high, the raster may still be visible during start-up.

There are several approaches to sound trapping in the video output stage: series tuned L-C from the video output base to ground; parallel tuned L-C in the video output emitter; or a ceramic shunt element in the video output base circuit. All of these can be detrimental to picture quality, if not carefully done. The ceramic element is in keeping with the "no alignment" philosophy successfully implemented thus far, so there was a strong motivation to use it. However, shunt loading Pin 24, if too severe, causes considerable distortion of high-frequency detail, due to excessive loading of the video driver. This can be reduced by adding a resistor between Pin 24 and the trap, and by returning the bottom of the trap to the video output stage emitter. The compromise chosen is shown in the full schematic. Again, it is good to keep these parts close to Pin 24 to reduce radiation of video detector products back to the tuner and IF front end.

The video output circuit can take many forms. Monomax was designed to accommodate full dc coupling, as described earlier. However, many TV designers, and users, don't like full dc coupling, because it sometimes seems to go too black, creating the suspicion that some information is hidden. Also, a directly coupled video output to picture tube cathode usually requires a negative voltage for at least one of the grids for proper set-up at high contrast settings. Finally, fully dc coupled designs are harder to protect from power-off flash or spot burn.

For these reasons the receiver described in this AN was a partially dc coupled type. This puts the brightness control in the cathode circuit, removes the need for the brightness limiting configuration, and makes spot/flash prevention easier. (The diode and electrolytic in G1 are for this latter purpose).

In the video output stage emitter, some dc set-up from the +12 V supply has been used to adjust the output dc level, to minimize overall dissipation. Also some additional vertical blanking has been fed through a diode, from the top of the vertical yoke. This blanking will be accomplished in the IC internally in later Monomax devices.

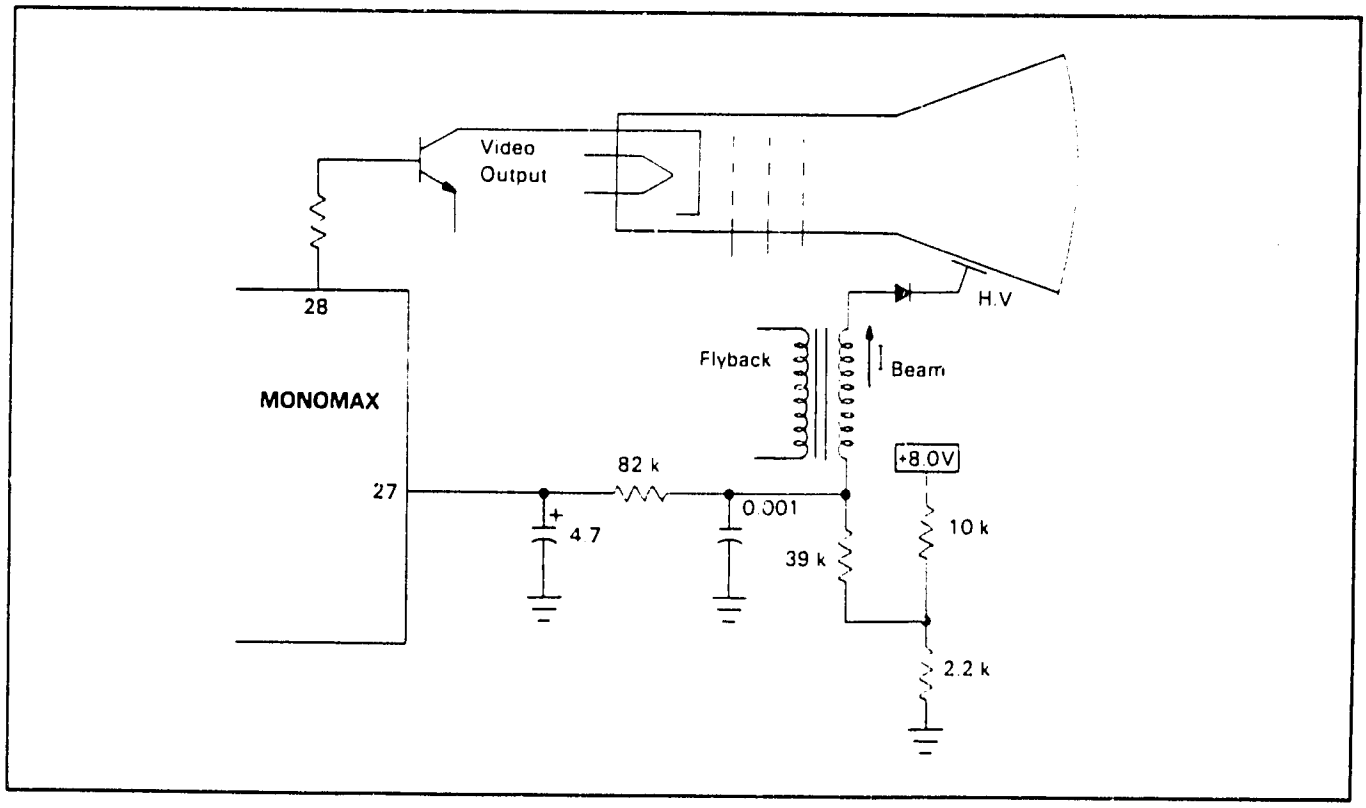

FIGURE 12 — Beam Current Limiting

APPENDIX I — AGC DELAY ADJUSTMENT

Ideally, a known antenna signal level of 1.0 mV (300 Ω balanced) or 500 μV (75 Ω unbalanced) is supplied to the tuner input. This signal level corresponds to the threshold of "snow" in the picture, for most receivers. With this signal level, the AGC delay pot is turned until the RF AGC voltage just begins to rise, and then is backed off slightly. The picture should be snow-free. If the RF AGC is permitted to rise, the picture will start to show some snow, which therefore represents less than optimum overall performance. If the setting is backed-off too much, the delay may be too large and mixer overload may occur at stronger signals.

The correctness of this setting should be checked at weaker and stronger signals. At weaker signals, say 6.0 dB down, it should not be possible to improve the picture noise by resetting the RF Delay. At stronger signal, say 40 dB stronger, there should be neither snow or overload evident in the picture, although the distance between these two conditions, as a function of delay setting, may be very narrow. The AGC system should automatically avoid these troubles. It may be necessary to make a slight compromise to avoid overload, which may produce a slight amount of snow in the 1.0 mV picture.

The above compromises can be achieved successfully without calibrated signals, with just a switchable attenuator and a strong signal. Starting at strong signal, note the available AGC Delay setting range between picture overload and snow. Using the switched attenuator reduce the signal strength and make sure that neither problem appears. If necessary tweak the Delay, but don't move outside the original range. Eventually the picture will get snowy, but the control will only be able to make it snowier. Setting it to the optimum (just barely) should still be within the noted range.

APPENDIX II — COMPONENT & CONSTRUCTION DETAILS

In order to make the enclosed PC board pattern easy to use, the following components are recommended: Remember that these are pertinent to **this** design architecture and this specific design. Many variations are possible with a little redesign work.

Flyback — Gold Star Type 154-028A with self-contained H.V. rectifier. Certainly, substitution is possible, but very careful attention to pin-outs and taps is required. The primary is, of course, a 120 Vdc type, which corresponds to about 800 V_{p-p} positive pulse at Pin 2. Pin 3 is a negative going pulse of 35 V_{p-p} and Pin 7 is a negative-going pulse of about 120 V_{p-p}. The H.V. terminal, which is internal in the above model, would be a positive going pulse of about 12 kV_{p-p}. Very little flexibility can be permitted on these values. Be careful to watch pin-outs and horizontal polarity.

Yoke —Gold Star Type 153-020A for 90° 12" — 20 mm neck picture tube. It requires approximately 1.0 A_{p-p} in both horizontal and vertical windings to give proper overscan in the 90° tube at 10-11 kV. This means a horizontal (saddle) winding of about 3.4 mH and a vertical (toroid) winding of approximately 3.0 Ω, 10 mH. Numerous substitutions are available, but the above values must be adhered to for this set architecture.

Horizontal Output Transistor — The board was designed for a TO-3 type, such as a BU205, BU204, or MJ12003. A plastic TO-220 type MJE12007 will do the job with some mechanical revision. The important parameters are $V_{(BR)CEX}$ = 1300 V and I_C = 2.0 A. A small amount of heat sinking, such as a U channel with 2 flags of 1 square inch each is recommended. A mica or Thermalloy isolator is suggested to reduce shock hazard to the experimenter. If an ac/dc design is contemplated, as referred to back in Figure 3, a lower voltage, higher current part like BU806 will be required for the horizontal output, along with a different yoke and flyback.

Vertical Output Transistors — It is possible to "get by" with a TO-92 complementary pair, such as MPS6560 and MPS6562, or the new, tall TO-92, MPSW01 and MPSW51. However, the author's opinion is that these operate too hot, with dissipation approaching 1 watt, each, worst case. Recommended alternatives include D40E1 and D41E1 in the TO-202, or TIP29 and TIP30 in TO-220. No heat sink is required. The devices need only $V_{(BR)CEO}$ = 30 V and good h_{FE} at 1.0 A.

Video Output Transistor -- For the load value shown in this design, a case 152 uniwatt, such as MPSU10, is best. The 300 V $V_{(BR)CEO}$ is not needed, but the device must be "small geometry"; i.e., high f_T and low C_{cb} to preserve picture resolution. A tall TO-92 or even an MPSA43, TO-92, can be used if the collector load is increased to 6.8 k, but some picture quality will be lost.

Audio Output Section — The transformer should be approximately 30:1 turns ratio, capable of handling 1 watt into 8.0 Ω. The output transistor should be set up at about I_Q = 12-14 mA, and should be capable of 1.5 W continuous dissipation. A TO-220 type MJE2360T, mounted on at least 3 square inches of aluminum is suggested.

H. Driver Stage — In the prototype receiver, the available driver transformer had only about 12:1 turns ratio. This necessitated a large wattage dropping resistor to provide the rather low-voltage, high-current primary waveforms. It would be better to obtain a transformer of 30:1 or so, to permit a more efficient driver stage. The 4.3 k, 2.0 W resistor could then be reduced considerably. In either case a TO-92 driver, type MPSA42, is a good choice.

SUMMARY:

Figures 13 and 14 provide the copper pattern for the PC board and the component locations. Note that signal input circuits are compact and grounded near Pin 1. Subsequently these and all other circuits are connected to the central ground at Pin 16, without being interconnected beforehand. The full receiver schematic is given in Figure 15.

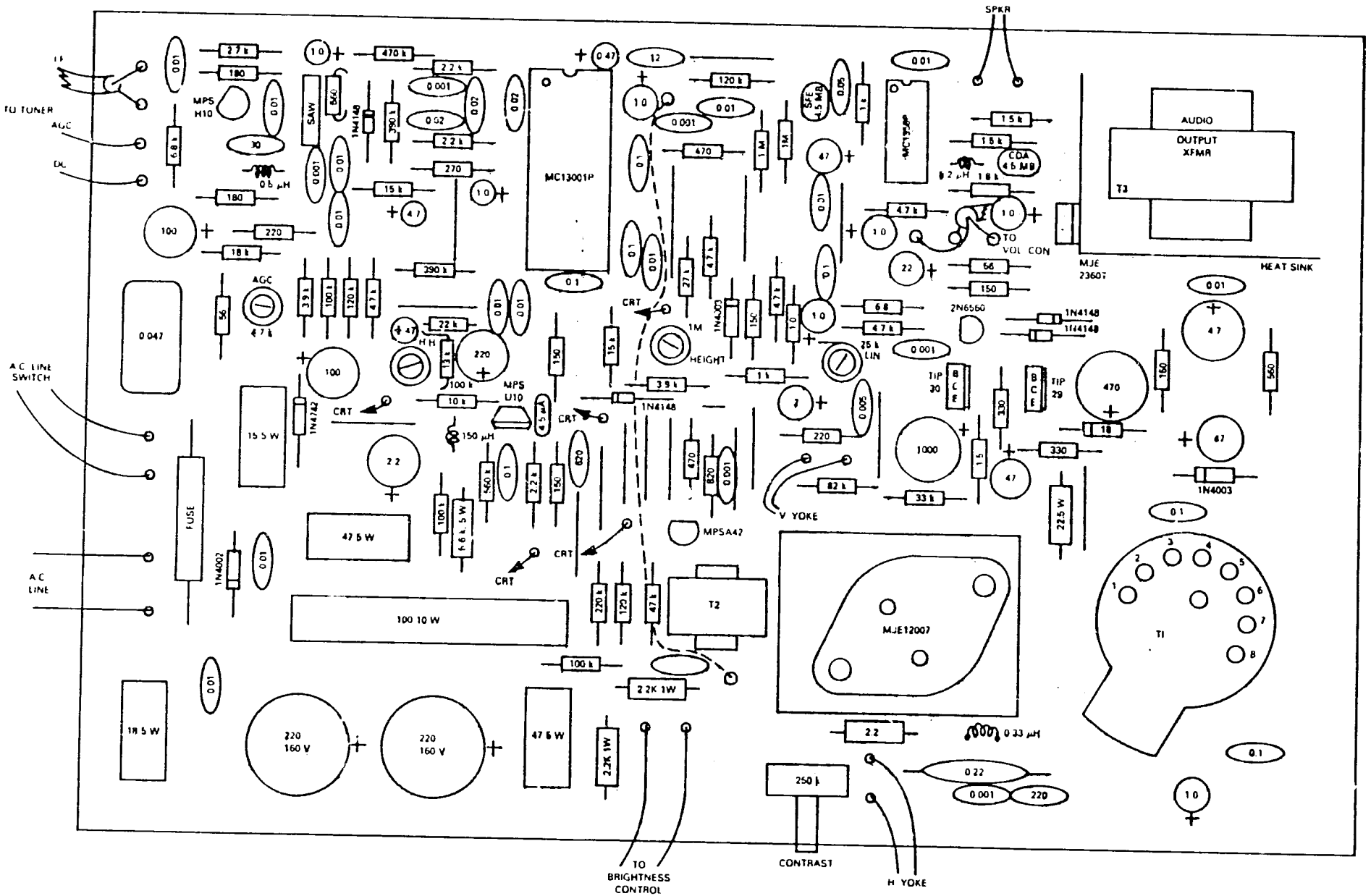

FIGURE 13 — Component Layout

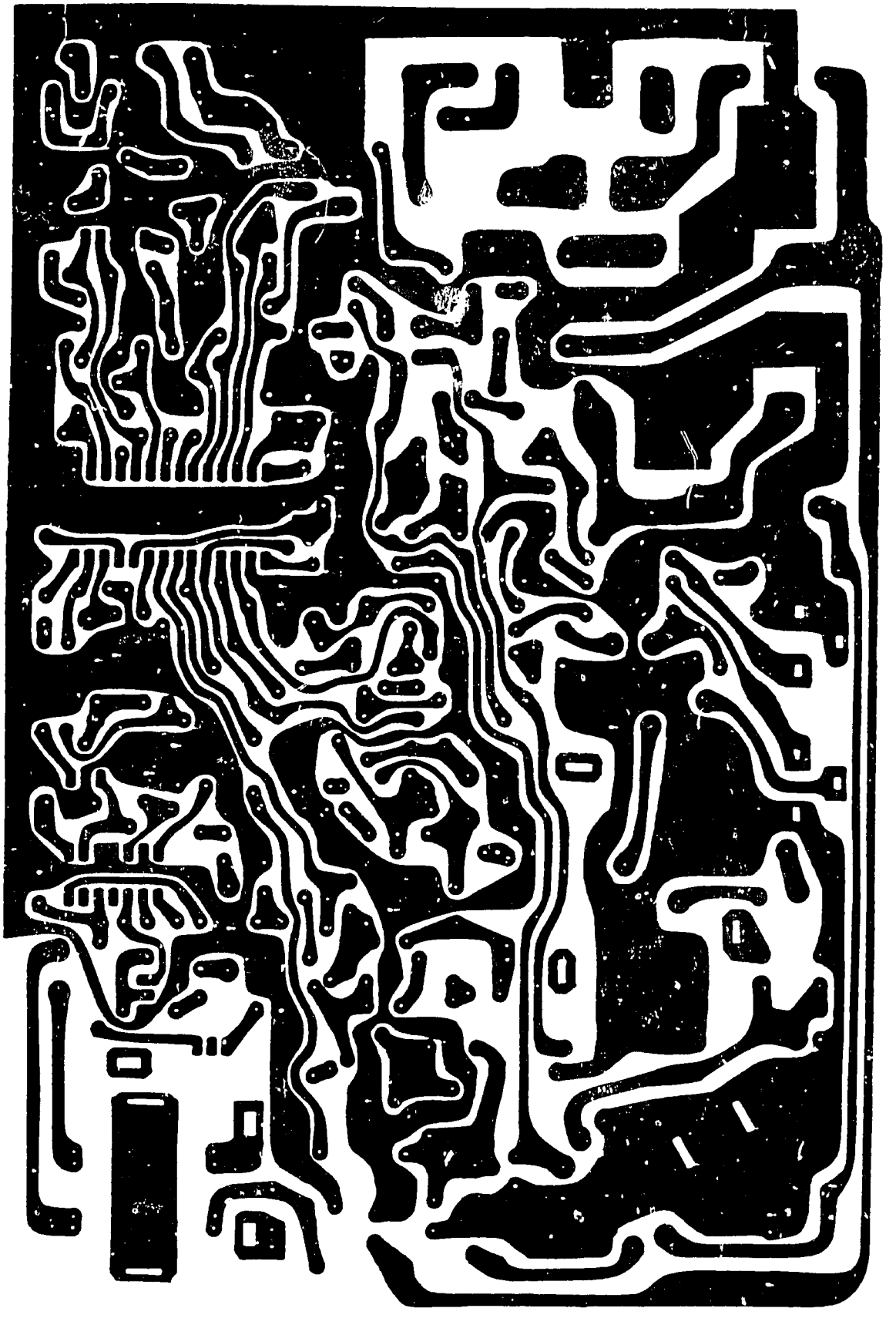

FIGURE 14 — Printed Circuit, Copper Side

Motorola reserves the right to make changes to any products herein to improve reliability, function or design. Motorola does not assume any liability arising out of the application or use of any product or circuit described herein, neither does it convey any license under its patent rights nor the rights of others

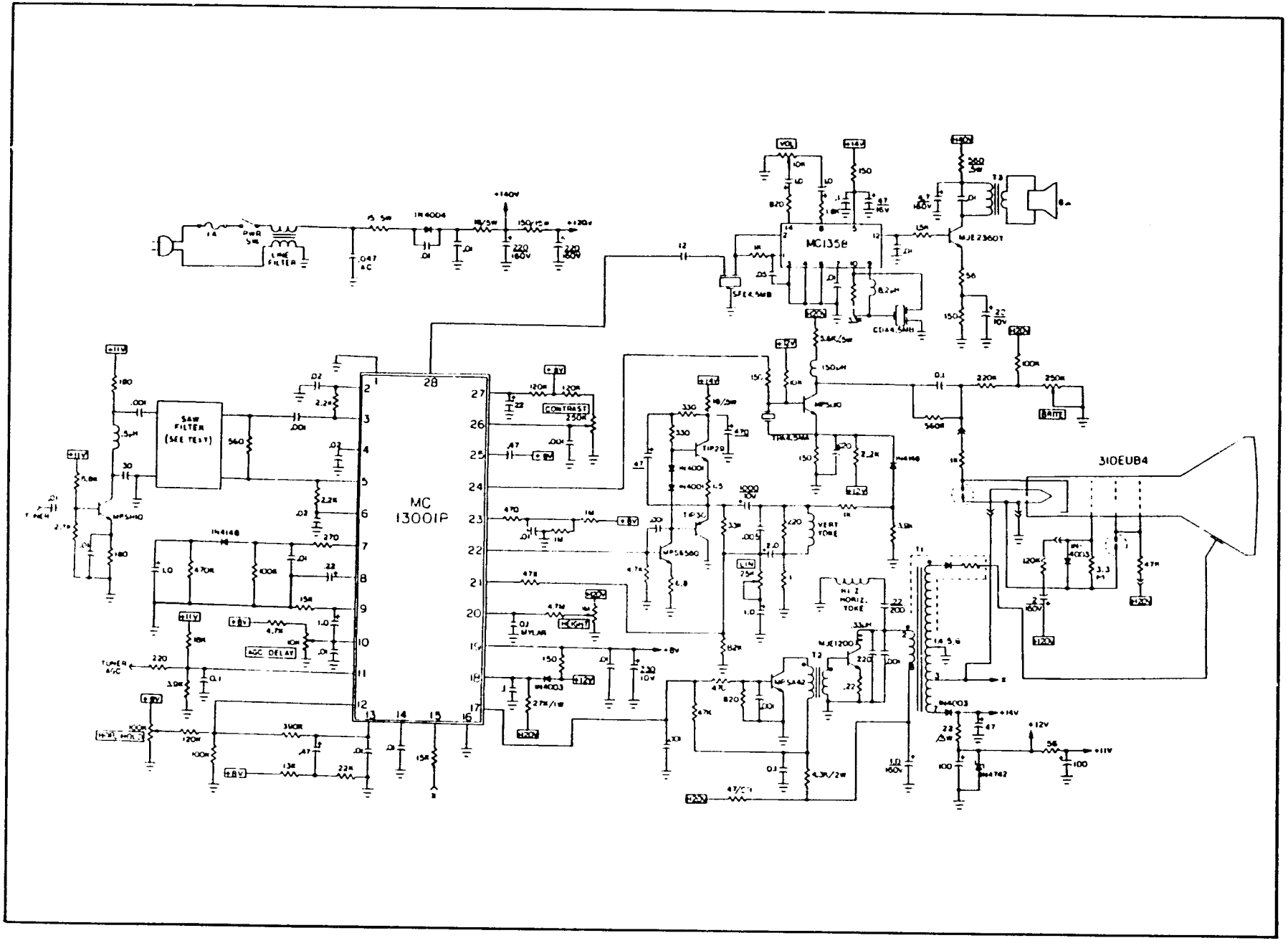

FIGURE 15 — Complete Receiver Schematic

APPENDIX A-2

PANASONIC AN5151

AN5150/AN5151 is IC of one chip in which VIF circuit, SIF circuit and deflection circuit of TV are built in.

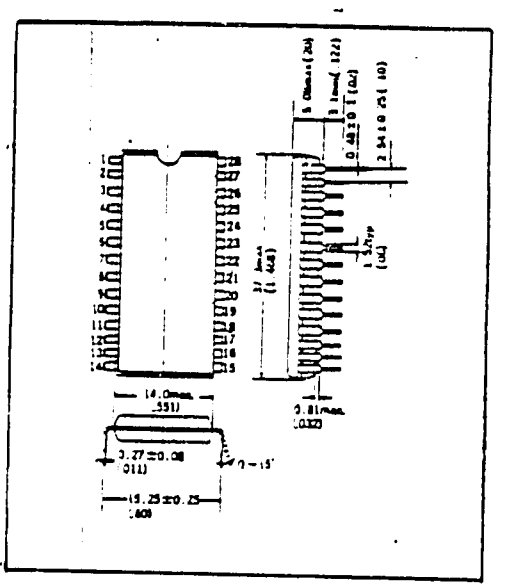

Features

* Video IF circuit, audio IF circuit, tuner AFC circuit and deflection processing circuit are built in one chip.
* As numbers of components are small, rational compact design can be achieved.
* By RFAGCsystem, choice of kinds is possible

  AN5150 Reverse type
  AN5151 Forward type
* It can be used for many sets such as B/W TV, color TV for domestic and oversea market(PAL/SECAM)
* Supply voltage(typ) V_{20}:10V, V_{16}:9.0V(horizontal deflection processing circuit only)
* Package : 28 Lead Dual-In-Line Plastic Package

Absolute Maximum Ratings(Ta=25°C)

Item	Symbol	Ratings	Unit
Supply voltage	V_{20-21}	12	V
Supply current	I_{20}	85	mA
	I_{16}	15	
Power dissipation	P_D	1100	mW
Operating ambient temperature	Topr	- 20 ~ +70	°C
Storage temperature	Tstg	- 55 ~ + 150	°C

F	Electrical Characteristics(Ta=25°C ± 2°C, Unless otherwise specified)								
	Item	Symbol	Test Circuit	Condition	Limits			Unit	Note
					min	typ	max		
	(Re:VIF) Video Detection Output	V_O		m=87.5%	1.8	2.0	2.3	Vpp	
	Input Sensitivity	V_S		Vo=-3dB	-	50	55	dBμ	
	Maximum Input	V_{max}		Vo > +0dB	105	110	-	dBμ	
	S/N Ratio	S/N		Vin=80dBμ	51	56	-	dB	
	Differential Gain	DG		m=87.5%	-	4	8	%	
	Differential Phase	DP		m=87.5%	-	3	5	deg	
	Video Frequency Characteristics	f_c		Vo=-3dB	4.5	6.0	8.0	MHz	
	Noise Inverter Deflection Level	V_{NT}			1.0	1.4	1.8	V	
	Noise Inverter Pull-In Level	V_{NI}			3.0	3.4	3.8	V	
	RF AGC Gain — Reverse (AN5150)	GRF(R)						dB	
	RF AGC Gain — Forward (AN5151)	GRF(F)		f=10KHz V_4=5mV	36	42	48	dB	

F	Electrical Characteristics(Ta=25°C ± 2°C, Unless otherwise specified)								
	Item	Symbol	Test Circuit	Condition	Limits			Unit	Note
					min	typ	max		
	AFC Centre Voltage	V_{12}			4.0	5.4	6.0	V	
	Phase Detector Sensitivity	μt		R_L=68KΩ//82 KΩ	20	40	60	mV/ KHz	
	Input Resistance (Pin 1)	Ri 1		f=58.75MHz	0.8	1.0	1.2	KΩ	
	Input Capacitance (Pin 1)	Ci 1		f=58.75MHz	3.0	4.0	5.0	pF	
	(Re:SIF)								
	Total Detection Output	Vo		fo=4.5MHz fm=400Hz Δf= ±25MHz Vi=100mVrms	200	300	440	mVrms	
	Input Limitting Voltage	Vi(lim)		fo=4.5MHz fm=400Hz Δf= ±25KHz	-	250	400	μVrms	
	Distortion ratio of Detected Signal	THD		fo=4.5MHz fm=400Hz Δf= ±25KHz Vi=100mVrms	-	0.6	1.0	%	
	AM Rejection Ratio	AMR		"	43	55	-	dB	

F	Electrical Characteristics(Ta=25°C ± 2°C, Unless otherwise specified)								
	Item	Symbol	Test Circuit	Condition	Limits			Unit	Note
					min	typ	max		
	(Re: Deflection)								
	Vertical Free-run Oscillation Start Supply Voltage	$V_{fvo.s}$		V_{CC1} when output is more than 0.7Vpp and fvo=40~60Hz	-	-	6	V	
	Vertical Free-run Oscillation Frequency	fvo		Oscillation frequency when Rosc(v) =30KΩ, V_{CC1}=10V	47	50	53	Hz	
	Vertical Oscillation Pulse Width	τ_{vo}		Oscillation pulse width at Rosc(v)= 30KΩ, V_{CC1}=10V	470	650	830	μS	
	Vertical Pull-In Range	fpv		Video input =2Vpp V_{CC1}=10V	-	37	41	Hz	
	Horizontal Oscillation Start Supply Voltage	$V_{fHO.S}$		V_{16} when f_{HO} is 10~20KHz and output is 1Vpp	-	-	5	V	
	Horizontal Oscillation Frequency	f_{HO}		Oscillation frequency when Rosc(H) =21KΩ, V_{CC2}=20V (at R_{16} = 2kΩ)	15.0	15.75	16.25	KHz	

F	Electrical Characteristics (Ta=25°C ± 2°C, Unless otherwise specified)								
	Item	Symbol	Test Circuit	Condition	Limits			Unit	Note
					min	typ	max		
	Horizontal Oscillation Pulse Duty	τ_{HO}		Oscillation pulse width at Rosc(H)= 21KΩ, V_{CC2} =20Ω	23	26	29	μS	
	Horizontal Oscillation Control Sensitivity	β		Changing value of the oscillation frequency at ΔI_1 ±100μA sinking	73	81	89	Hz/μA	
	Phase Detection Sensitivity	μP		Video input 2Vpp R(μ)=3.14KΩ μ=V_{19}X10	13.5	16.5	19.5	μA/μS	

AN5150 : RF AGC Reverse
AN5151 : RF AGC Forward

AN5150/AN5151 BLOCK DIAGRAM

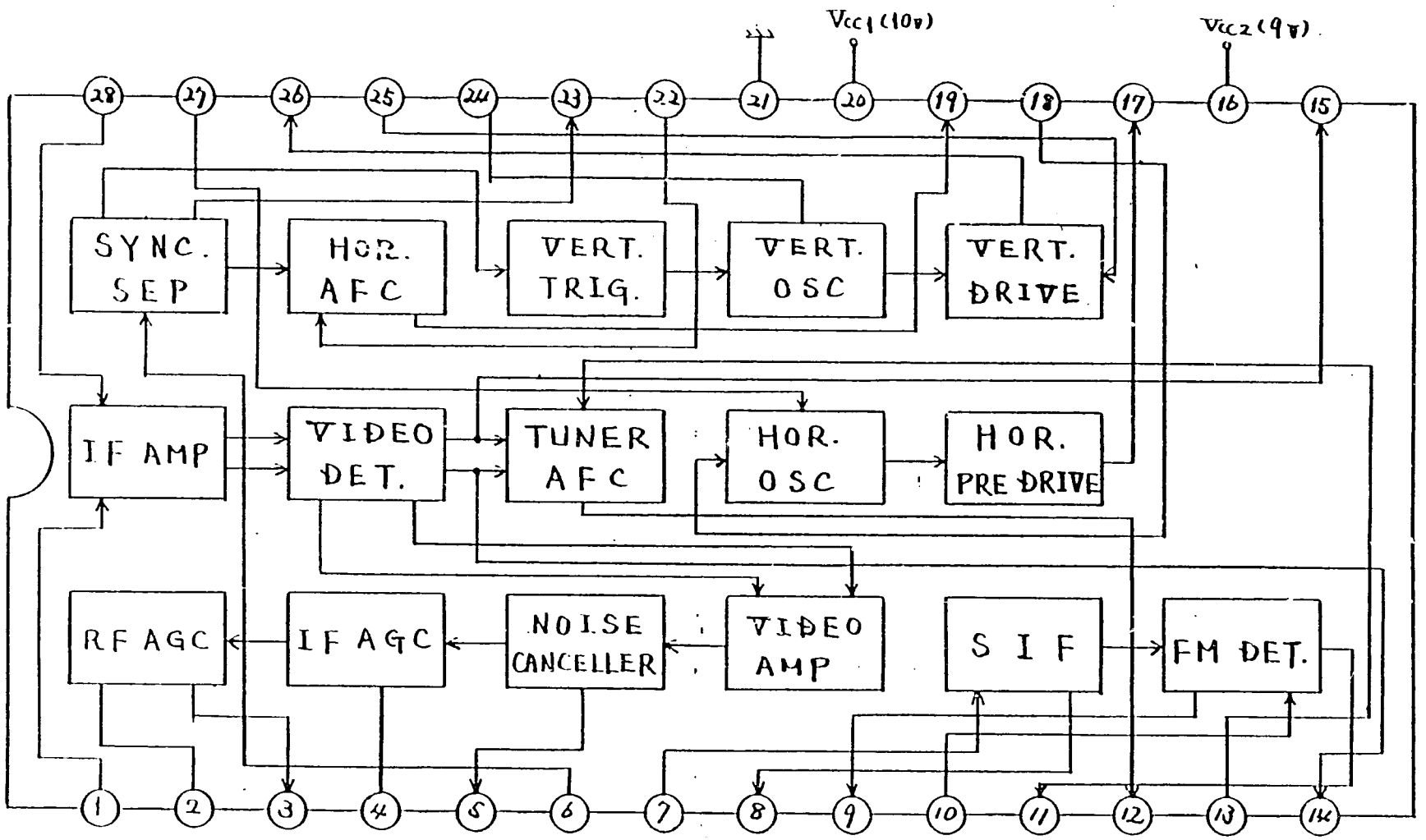

AN5150/51 Peripheral Circuit

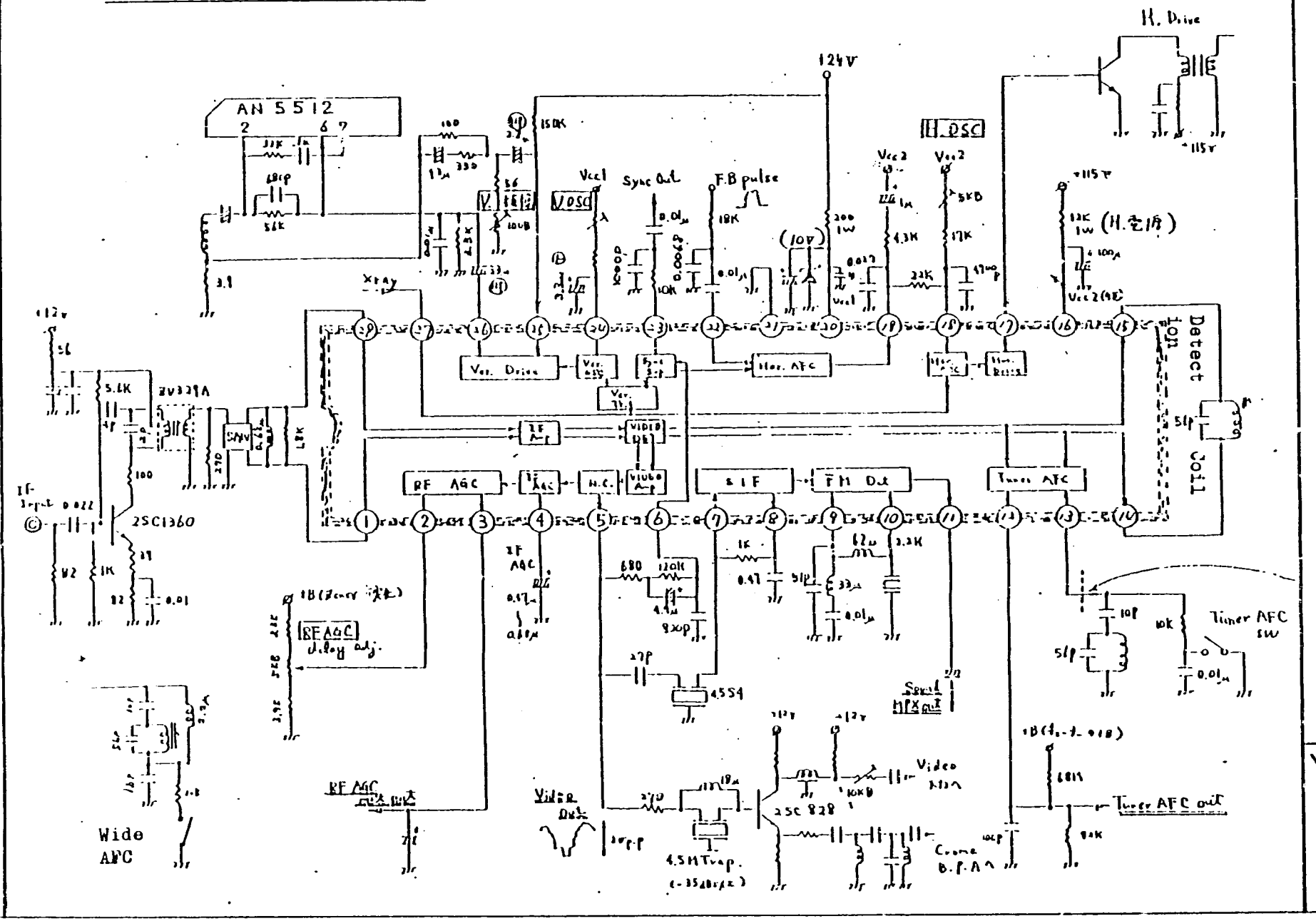

Matsushita Electronics Corporation

B/W TV Block Diagram —— 1

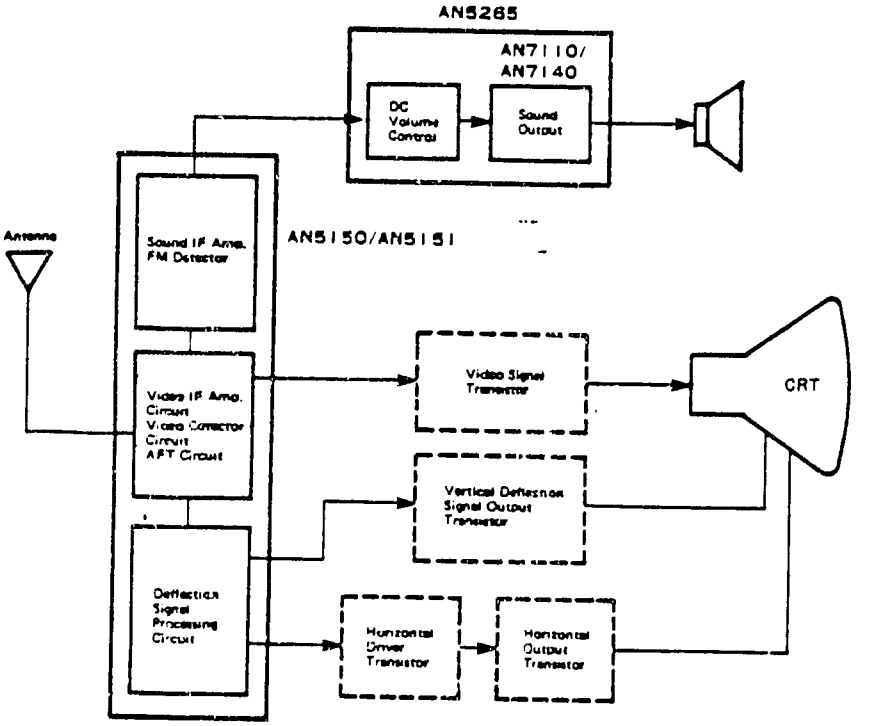

B/W TV Block Diagram —— 2

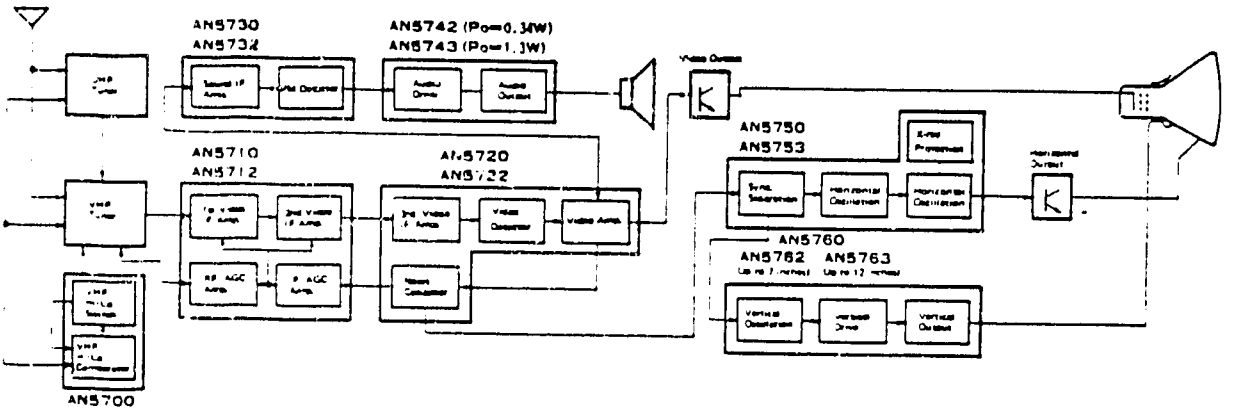

AN5710/20/30/50/60 ····· 6V Series
AN5712/22/32/42/43/53/62/63 ····· 12V Series

APPENDIX A-3

PHILIPS TDA 4500

SMALL SIGNAL COMBINATION IC FOR MONOCHROME TV

GENERAL DESCRIPTION

The TDA4500 combines all small signal functions (except the tuner) which are required for a monochrome television receiver.

For a complete monochrome television receiver only output stages are required to be added for horizontal and vertical deflection, video and sound. The TDA4500 can also be used in simple colour television receivers. In this application an external sandcastle pulse generator is required.

It incorporates the following functions:

- vertical sync separator/oscillator
- vertical output
- coincidence detector (sound mute)
- phase detector/frequency control
- a.g.c. detector
- sync separator
- horizontal oscillator
- synchronous demodulator
- vision i.f. amplifier
- tuner a.g.c.
- d.c. volume control
- a.f.c. detector
- video output
- sound demodulator
- audio output
- gate pulse generator
- sound limiter/feedback
- 90° phase shift
- overload detector
- horizontal output

QUICK REFERENCE DATA

Supply voltage	V_{7-10}; V_{22-10}	typ.	10,5	V
Supply current	I_7	typ.	75	mA
Supply current	I_{22}	typ.	4,5	mA
Operating ambient temperature range	T_{amb}		−25 to +65	°C
Storage temperature range	T_{stg}		−25 to +150	°C
Power dissipation	P_{tot}	max.	1,7	W

FUNCTIONAL DESCRIPTION (Fig. 1)

A complete black and white receiver can be built around this circuit by adding only the output stages for horizontal and vertical deflection with the video and sound output stages. The TDA4500 can also be used in simple colour television receivers using an external circuit to generate the sandcastle.

The block diagram (Fig. 1) depicts the various functions which are described briefly below.

The sensitivity of the i.f. amplifier is 70 μV for a peak to peak output voltage of 3 V (compare the TDA3541). This amplifier has a symmetrical input (pins 8 and 9) and is followed by a synchronous demodulator. The external tuned circuit is connected to pins 20 and 21. This circuit provides the information for the a.f.c. circuit, the 90° phase shift being supplied by internal RC networks. An a.f.c. output with a voltage swing of about 9 V is obtained from pin 17 (V_{7-10} = 10,5 V).

The a.g.c. detector is gated to reduce sensitivity to external electrical noise and the a.g.c. time constant network is connected to pin 24. Gain control range of the i.f. amplifier is greater than 60 dB. Adjustments of the tuner take over point is made at pin 4. When the voltage at pin 4 is approximately 3,5 V the direction of the tuner control voltage is positive going. When the voltage at pin 4 is approximately 8 V the direction of the tuner control voltage is negative going.

An output signal of 3 V (p.p.) is obtained from the video amplifier (top sync level 1,5 V) with negative-going sync. Since the sound signal is derived from pin 16 (see Fig. 4) the video output is not blanked during the flyback period. As shown in the application circuit (Fig. 4) the band pass filter for the sound must be connected between video output (pin 16) and sound i.f. input (pin 15). Sound information passes through a sound filter network and a sound demodulator circuit with an external tuned circuit for this stage connected to pin 13. The demodulator is followed by a volume control stage with a control range of 80 dB and an output amplifier with an audio output signal of 170 mV (r.m.s.) for a Δf of 7,5 kHz and at maximum volume setting.

The slicing level of the sync separator is referred to the top sync and is determined by the values of external resistors, the recommended slicing level being 30%. Noise protection is provided for the sync separator stage. Separated sync pulses are supplied to the gated phase detector which compare the sync pulses with the sawtooth voltage obtained from the horizontal flyback pulse (pin 5). During catching the gating of the phase detector is switched off and the phase detector output current is increased.

The in-sync or out-of sync condition is detected with the coincidence detector which is also used for transmitter identification. Sound output is suppressed when no input signal is available. Clamping the voltage on pin 28 to a level of 3,5 V sets the phase detector to a high output current, short time constant mode. This is appropriate for the reception of VCR signals.

Phase detector output voltage levels maintain the horizontal oscillator at its correct operating frequency. The push pull output (pin 27) has a typical duty cycle of 40%.

Vertical sync pulses are obtained from an internal integrating network with the vertical sawtooth being generated in the vertical oscillator. This sawtooth voltage is compared with the feedback voltage from the deflection coil via pin 3. The comparator generates the drive voltage for the vertical deflection output stage.

The TDA4500 has four supply pins. Pin 7 and pin 10 are for the main positive supply and circuit ground respectively.

Critical circuits are grounded by pin 19. Pin 22 is the supply for the horizontal oscillator. A low current supply (5 mA minimum) can be used to start the oscillator from an external high voltage supply rail.

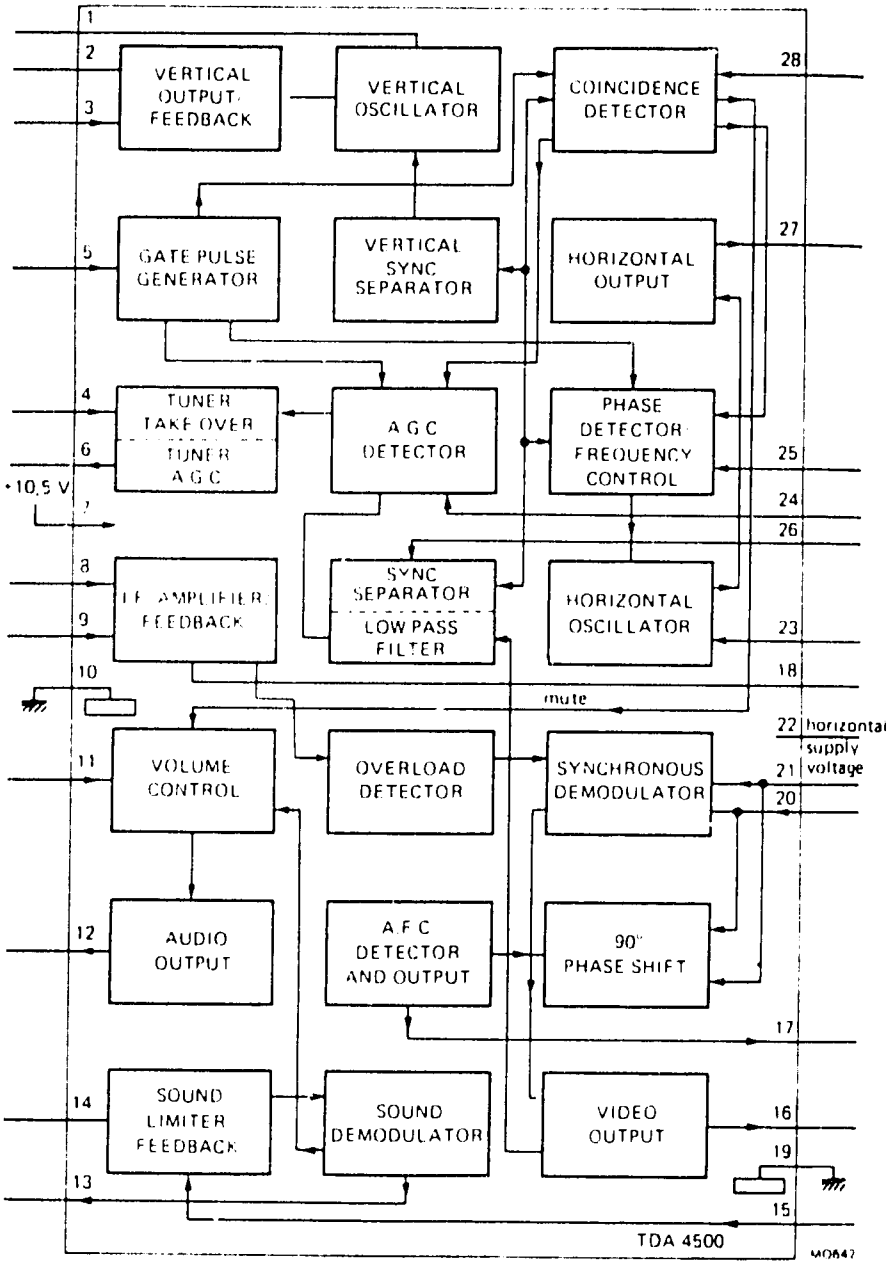

Fig. 1 Block diagram.

PINNING

Pin number	function	Pin number	function
1.	vertical oscillator	15.	sound i.f.
2.	vertical output	16.	video output
3.	vertical feedback	17.	a.f.c. output
4.	top linearity	18.	decoupling capacitor
5.	flyback pulse	19.	ground
6.	tuner a.g.c.	20.	38,5 MHz reference
7.	+10,5 V supply	21.	(38,9 MHz reference)
8.	i.f. input	22.	horizontal supply voltage
9.		23.	horizontal oscillator
10.	ground	24.	top sync detector
11.	volume control	25.	phase detector
12.	sound output	26.	sync separator
13.	6 MHz tuning (5,5 MHz tuning)	27.	horizontal output
14.	decoupling	28.	mute/coincidence detector

DEVELOPMENT SAMPLE DATA

DEVELOPMENT SAMPLE DATA

RATINGS

Limiting values in accordance with the Absolute Maximum System (IEC134)

Supply voltage	V_{7-10}, V_{22-10}	max.	13,2	V
Total power dissipation	P_{tot}	max.	1,7	W
Storage temperature range	T_{stg}		−25 to +150	°C
Operating ambient temperature range	T_{amb}		−25 to +65	°C

CHARACTERISTICS

V_{7-10} = 10,5 V, V_{22-10} = 10,5 V and T_{amb} = 25 °C unless otherwise specified

parameter	symbol	min.	typ.	max.	unit
Supply voltage	V_{7-10}	9,5	10,5	13,2	V
Supply current	I_7	–	75	–	mA
Supply voltage (horizontal oscillator)	V_{22-10}	9,5	10,5	13,2	V
Supply current (horizontal oscillator, note 1)	I_{22}	–	4,5	–	mA
Power dissipation	P_{tot}	–	850	–	mW
Vision i.f. amplifier (pin 8)					
Input sensitivity (onset of a.g.c.) at 39,5 MHz (note 2)	$V_{i(rms)}$	–	70	–	μV
Differential input resistance (note 3)	R_i	–	800	–	Ω
Differential input capacitance (note 3)	C_i	–	6	–	pF
Gain control range	ΔG	–	56	–	dB
Output signal expansion for 50 dB input signal variation (note 4)	ΔV_o	–	1	–	dB
Maximum input signal	$V_{i\,max}$	–	50	–	mV
Video amplifier (note 5)					
Zero signal output level (note 6)	V_{16-10}	–	5	–	V
Top sync output level (note 7)	V_{16-10}	1,2	1,4	1,6	V
Video output signal amplitude (peak to peak value)	$V_{16-10(p\,p)}$	2,75	3,0	3,25	V
Internal bias current of n.p.n. emitter follower output transistor	I_B	1,4	2,0	–	mA
Bandwidth of demodulated output signal	B	5	6	–	MHz
Video non linearity (note 8)		–	–	10	%

parameter	symbol	min	typ.	max.	unit
Horizontal synchronization circuit					
Slicing level sync separator (note 14)		-	30	-	%
Holding range PLL		–	±1000	–	Hz
Catching range PLL		–	±600	–	Hz
Control sensitivity video to flyback (note 15)		-	2	–	kHz/μs
Horizontal oscillator					
Free running frequency	f_{osc}	–	15625	–	Hz
Spread with fixed external components	Δf_{osc}	–	-	4	%
Frequency variations due to supply voltage changes (note 16)	$\Delta f_{osc}/\Delta V$	-	0	–	%
Frequency variation with temperature	$\Delta f_{osc}/\Delta T$	-	–	1×10^{-4}	K^{-1}
Maximum frequency shift	Δf_{osc}	–	–	10	%
Maximum frequency deviation between starting point output and nominal condition	Δf_{osc}	-	–	10	%
Horizontal (push-pull) output					
Output current	I_{27}	10	–	–	mA
Output impedance	R_{27-10}	–	200	–	Ω
Voltage when I_{27} = 10 mA	V_{27-10}	–	2	–	V
	V_{27-22}	–	3	-	V
Duty cycle of output pulse (note 17)	δ	0,35	0,40	0,45	
Flyback input (note 18)					
Minimum required input amplitude (peak to peak value)	$V_{5-10(p-p)}$	-	4	–	V
Phase detector switching voltage		-	0	-	V

DEVELOPMENT SAMPLE DATA

CHARACTERISTICS (continued)

parameter	symbol	min.	typ	max	unit
Tuner a.g.c.					
Take over voltage (pin 4) for positive going tuner a.g.c. (n.p.n. tuner)	V_{4-10}	-	3.5	-	V
Take over voltage (pin 4) for negative going tuner a.g.c. (p.n.p. tuner)	V_{4-10}	-	8		V
Maximum tuner a.g.c. output swing	$I_{6\,max}$	2	3	-	mA
Output saturation voltage at I_6 = 2 mA	$V_{6-10(sat)}$	-	-	300	mV
Leakage current	I_6	-		1	μA
A.F.C. circuit (note 9)					
A.F.C. output voltage swing	V_{17-19}	9	-	10	V
Available output current	$\pm I_{17}$	-	1	-	mA
Output voltage at nominal tuning of the reference tuned circuit	V_{17-19}	-	5,25	-	V
Sound circuit					
Input limiting voltage when $V_O = V_{O\,max} - 3$ dB (note 10)	$V_{14\,lim}$	-	400	-	μV
Input resistance at pin 15 (note 11)	R_i	-	3	-	kΩ
A.F. output signal at pin 12 (note 12) (r.m.s. value)	$V_{12-10(rms)}$	170	-	240	mV
Volume control (pin 11) (Fig. 3)					
Voltage with pin 11 disconnected	V_{11-10}	-	6,5	-	V
Current pin 11 short circuited to ground	I_{11}	-	1		mA
Volume control characteristic (note 13)			See Fig. 3		
Value of external control resistor	R_{11-10}	-	5	-	kΩ

CHARACTERISTICS (continued)

parameter	symbol	min.	typ.	max.	unit
Coincidence detector (mute) (note 19)					
Voltage in synchronized condition	V_{28-19}	–	9,5	–	V
Voltage in non synchronized condition (no-signal)	V_{28-19}	–	1,0	1,5	V
Switching level to switch phase detector from slow to fast	V_{28-19}	4,5	5,0	5,5	V
Switching level to activate the 'mute' function (transmitter identification)	V_{28-19}	2,25	2,5	2,75	V
Output current, in sync (peak to peak value)	$I_{28(p-p)}$	–	1	–	mA
Vertical oscillator					
Free running frequency	f_{osc}	–	47,5	–	Hz
Spread with fixed external components	Δf_{osc}	–	–	4	%
Holding range at nominal frequency		52,5	–	–	Hz
Temperature coefficient	TC	–	1×10^{-4}	–	K^{-1}
Frequency shift due to a supply voltage change from 9,5 to 12 V	$\Delta f_{osc}/\Delta V$	–	5	–	%
Vertical output (pin 2)					
Output current	I_2	1	1,3	–	mA
Output resistance	R_{2-10}	–	2	–	kΩ
Feedback input (pin 3)					
D.C. input voltage	V_{3-10}	4,75	5	5,25	V
A.C. input voltage (peak-to-peak value)	$V_{3-10(p-p)}$	–	1,2	–	V
Input current	I_3	–	–	10	μA
Non linearity of deflection current at V_P = 10,5 V		–	–	2,5	%

DEVELOPMENT SAMPLE DATA

Notes to characteristics

1. It is possible to start the horizontal oscillator by supplying a current of 5 mA which can be taken from the mains rectifier, to pin 22. The main supply (pin 7) can then be derived from the horizontal output stage.
2. I.F. input voltage (r.m.s.) – value at top sync level at which the video amplitude has dropped 0,5 dB compared with the amplitude at an input signal of 10 mV.
3. The input impedance has been chosen such that a SAW-filter can be applied. 800 Ω is an acceptable compromise between the requirements for triple transient suppression and power loss.
4. Measured with 0 dB = 150 μV.
5. Measured at 10 mV(r.m.s.) top sync input signal.
6. With switched demodulator.
7. Signal with negative-going sync with top white being 10% of the top sync amplitude (Fig. 2).
8. This figure is valid for the complete video signal amplitude (peak white to top sync).
9. Measured with an input signal (V_{8-9}) of 10 mV(r.m.s.); the a.f.c. output (pin 7) loaded with 2 x 100 kΩ between the supply and ground. The Q factor of the reference tuned circuit is 50.
10. Voltage at pin 15 is the r.m.s. value. Q_L of the demodulator tuned circuit is 20. Audio frequency is 1 kHz and the carrier frequency is 5,5 MHz.
11. Measured with an input signal of 1 mV(r.m.s.).
12. The tuned demodulator circuit must give an output level equal to that given in the "mute" condition.
13. Volume can be controlled using a variable resistor connected to ground (nominal 5 kΩ) or by means of a variable d.c. voltage. In this latter case the rather low impedance at pin 11 must be taken into account.

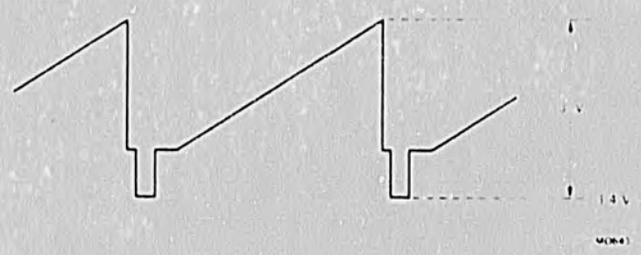

Fig. 2 Video output signal.

Notes to characteristics (continued)

14. The sync separator is noise gated. The slicing level is referred to top sync level and is independent of the video information. The value given is a percentage of the sync pulse amplitude. The slicing depends on the values of external resistors connected to pin 26.

15. Phase detector current increases by a factor of 7 during "catching" and when phase detector operates in the 'FAST' mode (pin 28). This ensures a high catching range and a higher dynamic loop gain.

16. Supply voltage variation in the range 8 to 12 V.

17. The negative going edge of this pulse initiates the switch off of the horizontal output transistor (simultaneous driver).

18. The circuit requires an integrated flyback pulse. The gate pulses for a.g.c. and the coincidence detector are obtained from the sawtooth.

19. The functions of in sync/out of sync and transmitter identification have been combined on pin 28. For reception of VCR signals the voltage on this pin must be fixed between 3 V and 4.5 V so that the time constant is fast and the sound is still available.

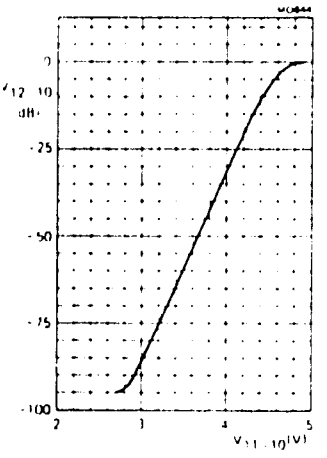

Fig. 3 Volume control characteristic at f = 1 kHz

APPLICATION INFORMATION

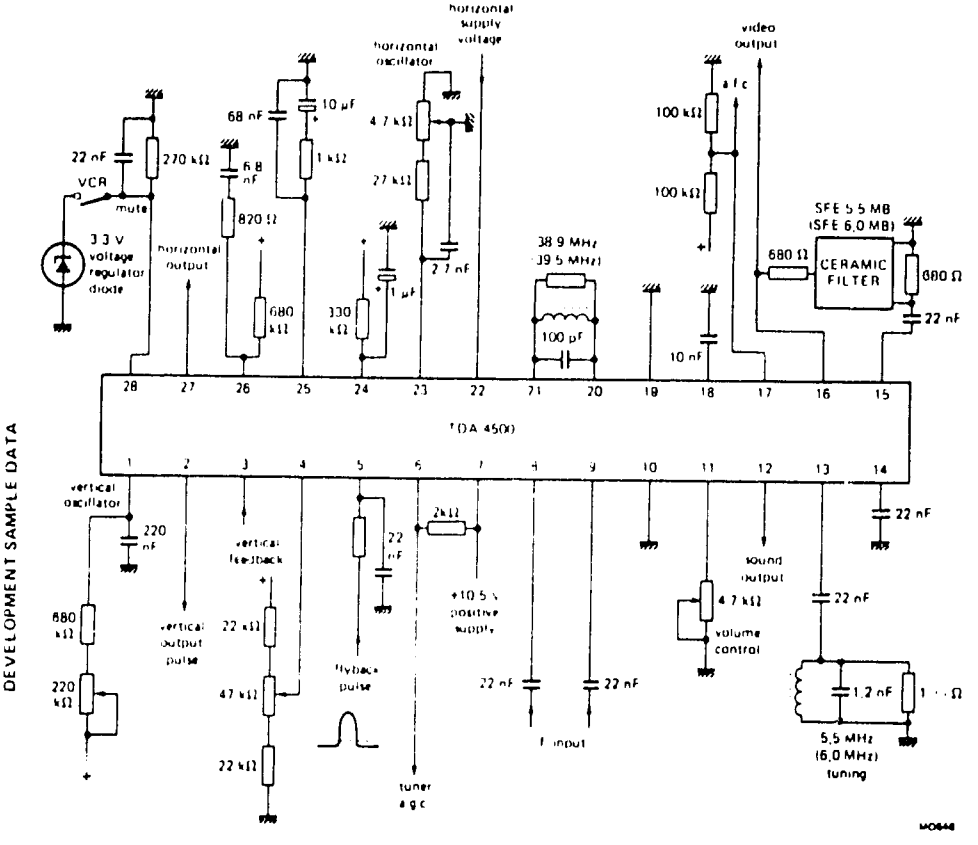

Fig. 4 Typical application circuit.

APPENDIX B

INSTRUCTIONS FOR OPERATING THE PROTOTYPE LOW-COST TV SYSTEM

APPENDIX B

INSTRUCTIONS FOR OPERATING THE PROTOTYPE LOW-COST TV SYSTEM

The prototype system consists of the following components:

- A video tape player (the signal source and IF transmitter)
- A monochrome TV set modified to demonstrate IF reception
- A TV built into a Tektronix oscilloscope to demonstrate electrostatic deflection and high-voltage reduction
- A video tape demonstrating different picture resolutions.

Demonstrating IF Broadcasting and Reception

The video tape player and Quasar TV are used to demonstrate wireless IF broadcasting. The video tape player is a standard VHS unit that has been modified to broadcast at the IF frequency via a telescoping antenna. Before running the demonstration, the unit should first be checked to establish that the 5-ft jumper cable is connected between the "input from antenna" and the "output to TV set" receptacles on the rear panel.

The first step is to turn on the tape player by pressing the ON/OFF button. The unit should default to the VCR mode with Channel 2 selected. Use the EJECT control to open the machine, insert a tape, and manually push the mechanism back into the unit. Then press PLAY. (For more detailed instructions see the section of the GE manual dealing with playing back a pre-recorded tape.)

The Quasar TV that serves as the IF broadcast receiver is turned on by rotating the volume control clockwise. The picture may have to be optimized using the FRAMING adjustment at the bottom center of the tape player front panel.

Both the transmitter and receiver should have their antennas fully extended and should be 2 to 10 ft apart for best results.

Demonstrating TV Displayed on an Electrostatically Deflected Picture Tube

The tape player and the Tektronix display unit are used to demonstrate TV picture reproduction in an electrostatically deflected CRT. The 5-ft cable is used to connect the two units because the TV receiver in the Tektronix display module has not been modified to receive signals from the tape player at the IF. It should be connected between the VHF "output to TV set" coax receptacle on the back of the tape player and the cable input (just below antenna) on the back panel of the Tektronix chassis. The three short jumper cables (connections X, Y, and Z) on the back of the Tektronix enclosure should never be disconnected.

The Tektronix unit consists of two parts. The upper part is the electrostatic display. It is turned on with the unmarked push-push switch on the right hand side of the front panel. The lower part is an inexpensive monochrome TV receiver. For normal operation with the tape player the TV is turned on by rotating the volume control (bottom right side) upward. The function switch on the bottom front panel should be all the way up (in the VHF position) and the tuner (middle knob on right side) should be tuned to Channel 3.

Demonstrating Reductions in Acceleration Voltage

The Tektronix display has a three-position switch for selecting the post-anode beam acceleration voltage. This switch is located under the small door on the upper front panel of the display module. It selects 1.4 kV, 5.5 kV or 16 kV and can be switched during operation to observe changes in the picture. Note that in a dark room the picture is very viewable even with the switch in the 1.4 kV position. The image may be slightly smaller because of the reduced beam deflection.

For additional assistance with the operation of this demonstration system, contact: Frank Cuta, Development Engineer, Battelle, Pacific Northwest Laboratories, (509)375-3611.

Using a Commercial Broadcast Source Rather Than the Tape Player

Regular commercial broadcast stations can be used to demonstrate the principles of IF transmission and electrostatic TV display.

To demonstrate IF transmission the video tape player can be used as a frequency translater. This is done by connecting either a commercial TV cable to the VHF (coax) input or by connecting a UHF/VHF 300-ohm twin lead transmission line to the UHF (binding posts) input. These connectors are on the rear panel of the tape player. The channel selector push buttons on the front panel can be individually tuned (see Quasar manual) to the desired channels and can be used to select the incoming program. Channel 2 has been pre-tuned to select the signal off of the tape player and should not be changed. (It is tuned to VHF channel 3 for this purpose.) By alternating between this and the other channel selections, commercial broadcast material can be compared with the program playing on the tape machine without making any other wiring or control changes.

The Tektronix electrostatic display and TV receiver system operates as a standard broadcast receiver. It can be used with either the attached telescoping antenna or the VHF cable (coax) connector (below the antenna) to view commercial TV programs.

- EXHIBIT A -

TEST EQUIPMENT SPECIFICATION

FOR

LC-TVRx DEMONSTRATION UNIT

1.0 INTRODUCTION

1.1 SCOPE

This document specifies the performance of a Low Cost Television Receiver (LC-TVRx) Demonstration Unit. It is issued to support hardware demonstrating the feasibility of a small TVRx using an electrostatic Cathode Ray Tube (CRT) running at a low cathode level.

1.2 EQUIPMENT DISCRIPTION

The LC-TVRx Demonstration Unit consists of two enclosures: A Toyomenka five inch VHF/UHF television set adapated as a video driver, and a modified Tektronix 608 display monitor used to view the electrostatically driven output. The controls on both units remain fully operational.

1.3 CONTROLS, INDICATORS, AND CONNECTORS.

Figure 1-1 shows the front panels of the Display and Signal Source Modules. A notable addition to the standard controls is a post deflection accelerator (PDA) level switch allowing post voltage reductions of 1/3 and 1/10 normal values. The functions of the controls and indicators on both units are described in Table 1-1.

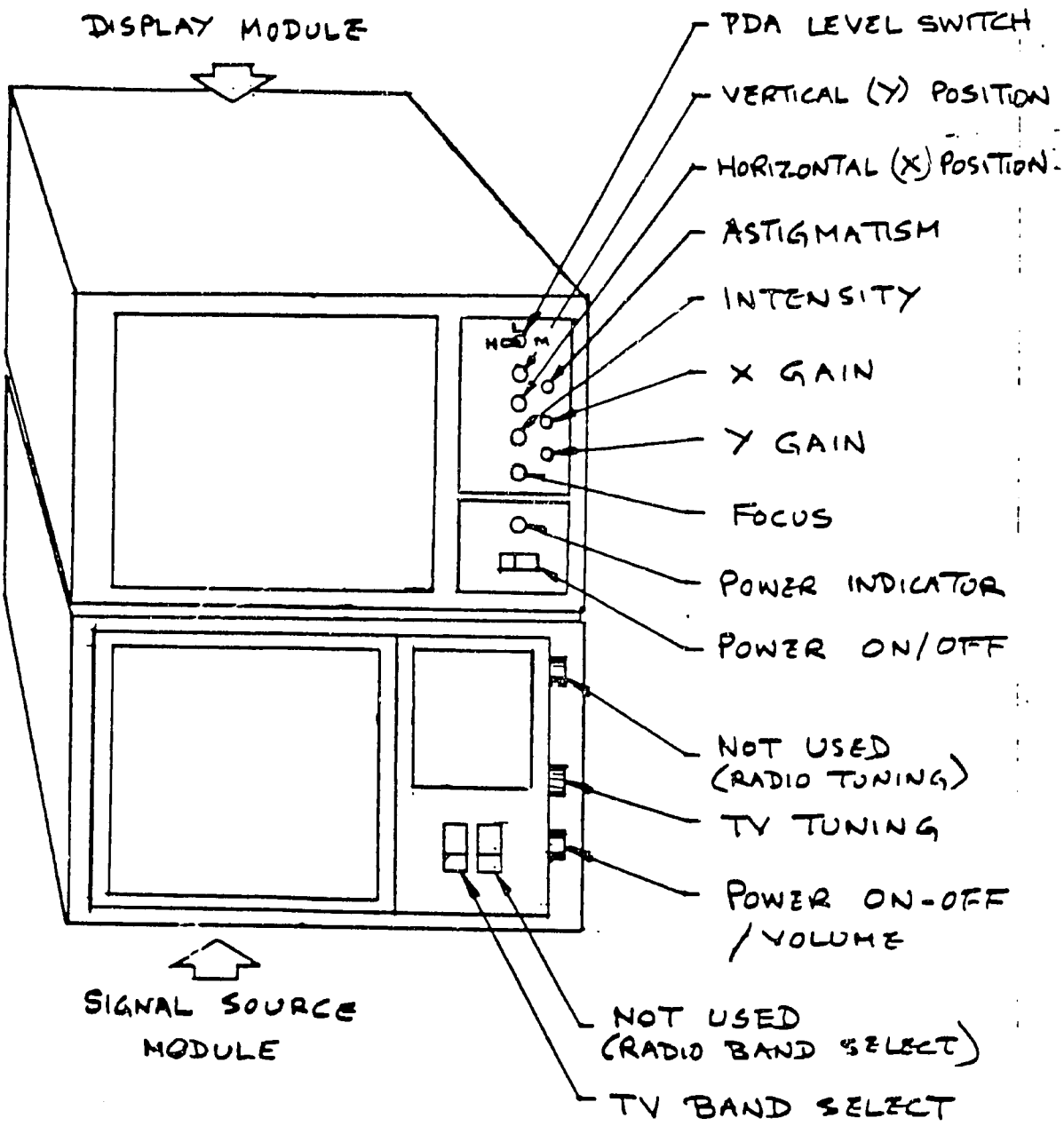

Fig. 1-1 LC-TVRx Demonstration Unit
— Front View

DISPLAY MODULE

PDA level switch	Post Deflection Accelerator Ctrl.	Controls PDA voltage level: H = 16kV, M = 5.5kV, L = 1.4kV.
Vertical (Y) Position	---	Positions the CRT beam in the Y axis.
Horizontal (X) Position	---	Positions the CRT beam in the X axis.
Astigmatism	---	Used with focus to control beam ellipsoid distortion.
Intensity	---	Controls brightness of the CRT display.
X Gain	---	Provides deflection amplification in the X axis.
Y Gain	---	Provides deflection amplification in the Y axis.
Focus	---	Provides adjustment to obtain a well defined display.
Power Indicator	---	Power indication when module is switched on.
Power On/Off	---	Controls power to the monitor module.

SIGNAL SOURCE MODULE

TV TUNING	-	Provides tuning control in both VHF and UHF ranges.
POWER ON/OFF/ VOLUME	-	Controls power to the Signal Source Module and speaker volume.
TV BAND SELECT	-	Provides selection of VHF, UHF and radio bands.

2.0 SPECIFICATIONS

2.1 ELECTRICAL SPECIFICATION

The electrical specifications are given in Table 2-1.

2.1.1 Engineering Reference Information

CRT Data:

Type:	Flat-faced, electrostatic.
Screen Dimensions:	5-inch (98 X 122mm)
Phosphor Type:	P4

2.2 ENVIRONMENTAL SPECIFICATIONS

The environmental specifications are given in Table 2.2.

2.3 MECHANICAL SPECIFICATIONS

The mechanical specifications are given in Table 2-3. In addition, Figures 2-1 and 2-2 provide outline drawings of the two enclosures forming the demonstration unit, and the Display Module CRT, respectively.

Table 2-1

Electrical Characteristics

CHARACTERISTICS	PERFORMANCE REQUIREMENTS	SUPPLEMENTAL INFORMATION
DISPLAY MODULE		
Power Source	90--260Vac (Nom.120Vac) @ 48--440Hz (Nom. 60Hz)	Using transformer tap ranges
HV Supply		
Cathode	4.5kV	Selectable (see table 1-1)
PDA	1.4kV, 5.5kV, 16kV	
Dissipation	61W	
SIGNAL SOURCE MODULE		
Power Source	120Vac @ 60Hz	
LV Supply	12Vdc @ 1A	Internally generated
Dissipation	12W	

TABLE 2-2
ENVIRONMENTAL CHARACTERISITICS

CHARACTERISTICS	PERFORMANCE REQUIREMENTS	SUPPLEMENTAL INFORMATION
Air Temperature:		
Operating	ØC to 50C (+32F to 122F)	
Storage	-55C to 75C (-67F to 167F)	

TABLE 2-3
MECHANICAL CHARACTERISITICS

CHARACTERISTICS	PERFORMANCE REQUIREMENTS	SUPPLEMENTAL INFORMATION
Height	275 mm (11 inches)	
Weight	210 mm (814 inches)	
Depth	457 mm (18.3 inches)	
Weight	11 kg (24 lbs)	

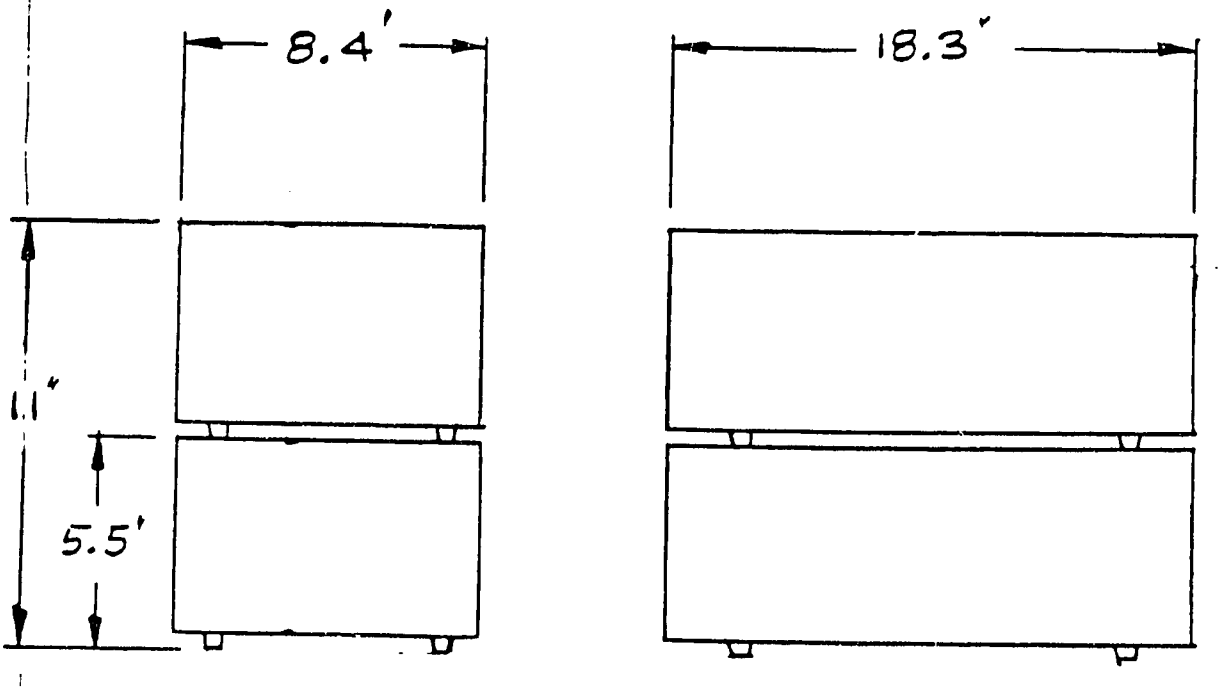

Fig 2-1. Outline Drawing
- LC-TVRx Demonstration Unit

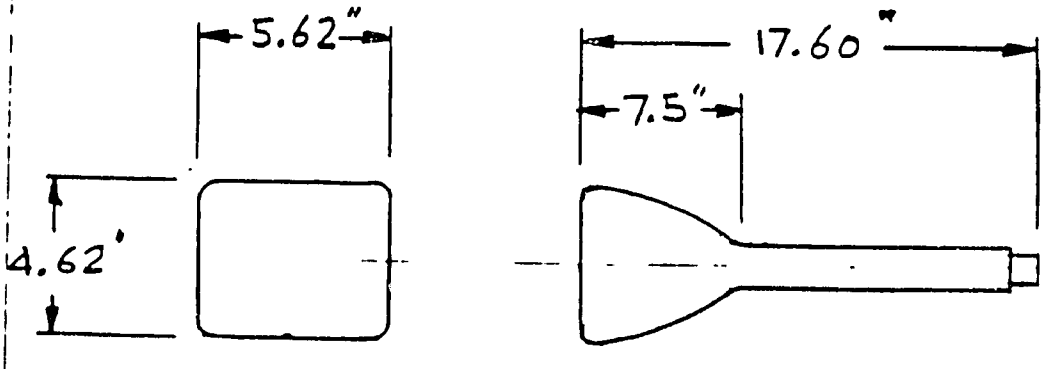

Fig 2-2 Outline Drawing - Display Module CRT

3.0 INTRODUCTION

Fig. 3-1 contains a block diagram representation of the LC-TVRx Demonstration Unit. All circuit elements shown are standard except for the X sweep generator which has been added to the Display Module. A number of circuits in the Signal Source Module are idle or inactive. These include all the final drive elements (X, Y & X axis) to the electromagnetic CRT previously utilized in the TV front end of the Signal Source Module.

3.2 DEFLECTION AMPLIFIERS

The deflection amplifiers convert a single-ended input signal to a push-pull output suitable to drive the deflection plates. The trigger source for the X deflection amplifier is from the X sweep generator. The signal source for the Y deflection amplifier is directly from the TV receiver in the Signal Source Module. X and Y gain switching elements are included to compensate for PDA voltage selection changes. The deflection amplifiers use megative feedback to ensure a highly stable output.

3.3 X-AXIS GENERATOR

This circuit is mounted on a small board at the right side of the Display Module. The X-asix generator receives a trigger signal from the Signal Source Module. Using a timer circuit, the X-asix trigger signal is translated into a linear sweep (ramp) signal for use by the X-axis deflection amplifier. A potentiometer mounted on the X-axis generator board provides adjustment to vary the ramp width.

3.4 CG/HV SUPPLY

This circuit provides High Voltage (HV) generatiron and rectification for the negative CRT cathode potential, for the CRT Control Grid (CG) bias, and for the switch slectable Post Deflection Accelerator (PDA) Supply. The circuit uses a single oscillator and a single HV transformer, but with two output windings. The cathode output is controlled by the front panel INTENSITY control. The control grid signal input is recieved from the Z-axis amplifier.

3.5 Z-AXIS AMPLIFIER

This circuit receives the video signal from the TV receiver portion of the Siganl Source Module. The Z-axis amplifer provides analog amplification of the video signal before sending it to the CG/HV circuit to have the high negative bias added.

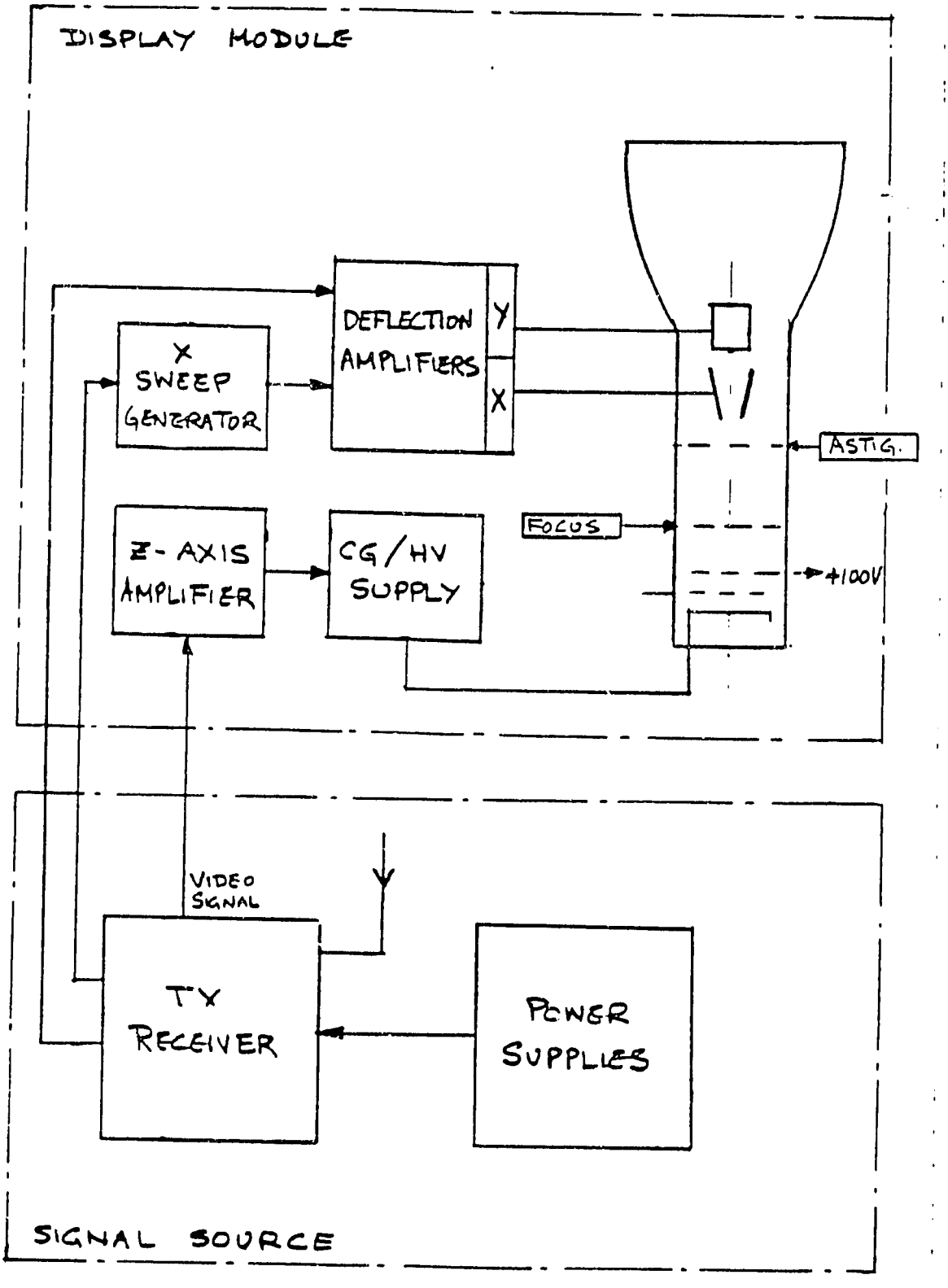

Fig. 3-1 LC-TVRx Demonstration Unit Block Diagram

3.6 TV RECEIVER

The TV receiver video signal is generated by a typical portable TV set (Toyomenka TMK705). The signal is developed using standard, if economical, circuit design techniques. The VHF/UHF tuning section includes a switch to select between a telescopic monopole antenna for local reception, or a remote VHF/UHF antenna for fringe areas.

3.7 POWER SUPPLIES

The Signal Source MOdule was originally designed to accept a variety of low voltage direct current supplies. The current configuration is designed to accept 120Vac main line power @ 60Hz as its single source.