INCREASED PRODUCTIVITY THROUGH BETTER HEALTH

Belize, Central America

Field Report of Drilling Training Adviser
By: Richard Bourgoin

February 8 - April 11, 1987

Contract No. LAC-0018-C-6005-00
Project No. 505-0018

THE PRAGMA CORPORATION
116 EAST BROAD STREET
FALLS CHURCH, VA 22046

Tel. 703-237-9303 • Telex 203507 PRAGMA FSCH UR
FAX 703-237-9326

President
Jacques Defay

Established 1977

Clients

AID
World Bank
IDB
IFAD
OAS
Peace Corps

Fields

Agriculture/Rural Development
Health, Water Sanitation
Financial Management
Private Sector Development
Conference Management
Participant Training (M-C)
Industrial Development and Finance
Microcomputer Application, Hardware and Software

Overseas Offices

Belize/Belize City
Tel: 15938
Telex: 120 VILLA BZ

Burkina Faso/Ouagadougou
Tel: 335339
Telex: RAN HOTEL 5273 BF

Indonesia/Jakarta
Tel: 793480
Telex: 47319 FINAS IA
FAX: 7996218

Panama/Panama City
Tel: 649369
Tel: 637842
Telex: 2116 TRTELCOR PA

Zaire/Kinshasa
Tel: 32714, 31097
Telex: 21536 LASCO ZR

Countries

Africa

Benin
Botswana
Burkina Faso
Central African Republic
Ivory Coast
Mali
Niger
Rwanda
Sierra Leone
Uganda
Zaire
Zimbabwe

Latin America

Argentina
Belize
Bolivia
Costa Rica
Ecuador
Guyana
Honduras
Mexico
Nicaragua
Panama
Paraguay
Peru

Caribbean

Antigua
Barbados
Dominica
Dominican Republic
Haiti
Jamaica
St. Kitts/Nevis

Asia

Burma
India
Indonesia
Nepal
Pakistan
Philippines
Singapore

North Africa/ Middle East

Egypt
Lebanon
Morocco
Tunisia
Yemen

Belize: Increased Productivity through Health
Project No #505-0018

Field Report of Drilling Training Adviser
February 8 - April 11 1987

Foreword

This report was written in accordance with the Terms of Reference developed by the Pragma/MCD Technical assistance team assigned to the Ministry of Health in Belize under the Increased Productivity through Better Health Project (IPtBH #505-0018)

The principal author of the report was R. Bourgoin - Drilling Rig Training Advisor to the project. Editorial input was provided by the Project Technical Officer, Joseph Carter.

CONTENTS

		Page
I.	OBJECTIVES OF THE CONSULTANCY	3
II.	EXECUTIVE SUMMARY	4
III.	TRAINING ACTIVITIES	5
IV.	FINDINGS	9
V.	RECOMMENDATIONS	18
VI.	APPENDIX - A	20

I. OBJECTIVES OF THE CONSULTANCY

Statement of Work for Drilling Rig Instructor

A. Objective:

The Consultant shall train local personnel in water drilling techniques appropriate to the conditions found in Belize.

B. Scope of Work:

1. Conduct a training course in water well drilling operations with conventional mud rotary and cable tool systems. This training should include, but will not be limited to, a) well construction; b) well installation; c) logging procedures; selection of screens, sanitary protection and casing out of poor water quality aquifers. This training course must be appropriate to the local conditions in Belize, i.e geological conditions (sand, rock, clay) and equipment conditions.

2. Train the drilling crew in well rehabilitation, installation and maintenance of the India Mark II pump and lining of shaft turbine pumps.

3. Establish procedures for drilling operations by using standardized forms for the monitoring of performance and use of the drilling equipment.

4. Do an evaluation of drilling equipment and prepare a statement of the working condition of the six (6) cable rigs and CT 211 rotary rig.

5. Make a list of spare parts needed to keep these rigs in running order through the life of the project.

6. Make a list of materials and tools required to keep the rigs working.

7. Fabricate materials to facilitate the drilling, i.e. construction of tank for drilling mud.

II. EXECUTIVE SUMMARY

During his nine week consultancy the drilling rig training Advisor (DRTA) had ample opportunity to observe drilling operations being conducted throughout Belize by the drilling crews of the Ministry of Natural Resources*. Visits were made to the UNICEF and CARE project sites (where ongoing drilling activities were underway) as well as to the start-up sites of the IPtBH project.

The findings of the report are presented forthrightly with no attempt to identify mitigating circumstances. The organization of the report more or less corresponds to the activities described in the Scope of Work (SOW) viz. training, evaluation of equipment, spare part requirements, etc.

Basically the DRTA is of the opinion that: (i) major improvements must be made in both the administrative and operational procedures of the Ministry of Natural Resources as it pertains to drilling operations, and, (ii) the drilling equipment currently in use in the project area, including the new cable tool rig is inappropriate for the hydrogeological conditions. In the event that steps are not taken to redress these problem areas it would be imprudent to anticipate the achievement of objectives set for the water component of the project, at least those pertaining to well construction and rehabilitation.

III. TRAINING ACTIVITIES

The training component of the consultancy was divided into classroom and field instruction

Classroom Instruction

During a two day period, from 8:00 am to 3:00 pm, the advisor covered an Introduction to Drilling, with its differing geologies and procedures, machinery and tools for each formation, with emphasis on air, percussion and mud drilling. Attention was given to bit types, casing, screens, packing and cleaning the hole through air lift and then monitoring production during and after drilling. The use of mud as a technique with the description of different kinds, qualities and viscosities of bentonite and the construction of mud basins, using a separator and a vibrator were discussed. Blackboard demonstration was used extensively to show mathematical calculations and formulae for volume and pressure and the appropriate dimensions. Diagrams aided teaching of packing, cementation, bridge breaking, straightening of crooked holes, and the correct installation of filtration systems. Logs demonstrated piezometric monitoring and perforation measurements, as well monitoring of completed wells.

General site management including machine maintenance and material and spare part requirements were outlined. Field breakdowns and emergency problems were explored. More teaching time would be valuable, and future one day class-room reviews would improve field operations.

Schematic drawings and illustrations presented during the workshop are presented in Appendix 1

Field Training

Site #1 - Bermudian Landing

The site chosen for the first field training session was Bermuda Landing a village located about 45 km from Belize City in Belize District. This was the first site to benefit from drilling activities under the IPtBH project and as such there was an enthusiastic demonstration of community support on the day that drilling was inaugurated. The new cable tool rig provided by the project was used for the first time at this site.

On the second day of drilling, the clutch of the drilling rig deteriorated completely, necessitating a halt in drilling operations. The malfunctioning clutch precluded extracting the drill shaft from the 35' bore hole, consequently the drilling rig could not be moved. Because no replacement clutch was available in Belize, an order had to be placed in the U.S. The unavailability of replacement parts in general is a serious obstacle to efficient drilling operations. In the case of the Bermuda Landing site, the new rig remained inoperative for over two weeks.

Little in the way of hands-on training was possible at Bermuda Landing because of the problems cited. The experience did provide the advisor with an opportunity to provide guidelines for the future procurement of drilling rigs.

It is recommended that the following conditions obtain as part of the procurement contract for drilling rigs by the GOB/MNR:

- a factory representative must assemble and survey the rig in Belize,

- the advertised capability of the rig must be certified by the representative under actual field conditions viz. if a 300' capacity is claimed, it must be demonstrated;

- the representative should remain with the rig for at least two weeks to make the necessary adjustments required during the breaking in period (machines leaving the factory are not field tested before delivery);

- for all start-up operations, a technician must be on hand who is thoroughly knowledgeable of the intricacies of the new equipment, the terrain, drilling, depths/diameters and minimum/maximum power ranges.

Site #2 - San Antonio

Following the breakdown of equipment in Bermuda Landing field training activities shifted to the village of San Antonio in Cayo District. The site was designated an "experimental well" site by the MNR because it was to receive a rudimentary water system and because it was selected for training purposes.

A drilling rig at the approximate end of its useful life was employed at this site and despite its recent overhaul, the machine constantly overheated even at low RPMs; after reaching only 15' the rig's clutch, belts, and pulleys heated to the point where they burst into flames.

At this point, the drilling crew voiced their frustration with the inadequacy or the equipment, - a frustration that was shared by the advisor since repeated equipment failures undermined the benefits of the field training exercise.

Repairs were made to the cable rig and drilling recommenced, however shortly thereafter the cable broke and the hole had to be abandoned.

This experience reinforced the advisor's opinion that the use of antiquated equipment that is technologically outdated is not remotely cost effective. It also highlighted the problems associated with the total unavailability of appropriate tools' viz. no jacks and pull back tools.

Site #3 - Silk Grass

The next attempt to achieve the training objectives set for cable tool drilling was launched on Feb 28 in Stann Creek District. Once again repeated equipment failures undermined this effort. Upon its arrival on site, the drilling rig could not be started because of a missing brace, (fortunately this was repaired free of charge by a local machine shop). Despite a host of mechanical shortcomings, i.e. no funnel for the spoon valve, a leaking radiator, gas line leakage, etc., the crew managed to reach the hardly impressive depth of 14' before the rig reached terminal break down. Ultimately this hole was also abandoned.

Site #4 - Puppy Show

In response to the series of mechanical set backs experienced with the cable tool rigs, training activities shifted to the rotary rig - (the Canadian-made Conterra CT 211) in Punta Gorda.

The drilling crew assigned to the rotary rig in Punta Gorda demonstrated an impressive familiarity with the rig and at the Puppy Show site revealed that they could work with speed, safety and efficiency. Under the observation of the advisor, the crew demonstrated:

- the setting up of the rig on site
- drilling with a tricone ø 8" bit, passing to a ø 6" bit with a down hole hammer to the depth of 90';
- changing drilling tools
- installing the casing and packing
- dismantling of the rig and equipment (in 9 1/2 hours).

It was the opinion of the advisor that the efficiency of the rotary rig operation was hampered by the absence of adequate support equipment and materials. viz. stronger mud pump, appropriate tricones (bits), stronger power head, etc. (a more detailed discussion of this issue appears later in the report). Apropos of the training of the rotary crew in Punta Gorda, it is recommended that Messrs. Bennet, Gonzales, Alvarez and Casemillo receive training in logging calculations, reporting on millimetric paper, introductory hydrogeology and hydraulics.

With appropriate training and the necessary tools, the Punta Gorda crew should be capable of completing two (2) 100' wells per day.

Site #6 - Georgeville

The CT 211 rotary rig was moved to Cayo District from Punta Gorda and drilling started on the March 12; a depth of 300' was reached on March 18. However in the absence of a flow meter pump it was impossible to test the well so it was simply capped for later testing.

Site #2B - San Antonio

The CT 211 was next moved to San Antonio where drilling with the cable rig first commenced. Drilling with the rotary rig using mud, a depth of 85' was achieved before the operation was forced to a halt because of an unavailability of appropriate tricone bits. Additional attempts were made to bring in wells with the CT 211 in San Antonio using air/foam. Owing to the absence of bits and other tools, mud drilling was not possible; approximately 50 yards from the previously attempted site, the rotary rig reached 65' before the down hole hammer became stuck in the clay formation and the hole was lost. A final effort was made 200 yards away still using

air/foam. Over a two day period a depth of 110' was reached before the down hole hammer was once again mired down in the clay, forcing operations to cease.

At this point, the crew of the MNR made the decision to proceed on to yet another hole in San Antonio without benefit of the supervision of the advisor who doubted the wisdom in continuing in the face of such technical adversity.

Site #7 -

A final effort to bring in a well using the cable rig was made in the village of Las Flores near Belmopan. Again for technical reasons, the attempt was thwarted and the hole consequently lost.

IV. FINDINGS: DRILLING OPERATIONS/TRAINING

For the most part the drilling operations of the MNR are in a deplorable state. The reasons for the extraordinary level of inefficiency are summarized below:

- drilling equipment that is worn out and technically inappropriate to the environment.
- a critical absence of tools and spare parts for the drilling rigs.
- the absence of an organizational structure responsible for the planning, coordination, and supervision of drilling activities.

Inappropriate Drilling equipment
Cable tool Rigs

There are several dimensions to the problem identified under the rubric inappropriate drilling equipment. On a very basic level the cable tool rigs, except of course for the new rig, reflect the simple ravages of constant use over many years with inadequate preventive maintenance. Owing to budgetary constraints which preclude maintaining an inventory of spare parts, the absence of any inventory system for those parts which are warehoused, and no routine maintenance program, five (out of six) of the cable rigs are simply mechanically unreliable and their operation is plagued by unpredictable breakdowns and by periods of down time which is costly especially when crews are in the field.

On another plane, the cable tool rig technology is simply outdated and inappropriate for the diverse hydrogeological conditions found in Belize. While the initial capital outlay for a rotary rig versus a cable tool rig is greater; rotary rigs surpass cable rigs in cost effectiveness and operational efficiency. For example:

Cable Tool Rig:

Set-Up time - 2 hours

Drilling depth 100-150' - 6 days in soft soil

vs.

Rotary Rig

Set-Up time - 20 minutes
(with mud basin)

Drilling depth 100-150' - 3 hours

The above comparison assumes that both rigs are in good working condition and benefit from trained crews and good organization and adequate support equipment. Unfortunately this is not currently the case in Belize, particularly with regard to the cable rigs which are antiquated and mechanically deficient. Based on observations of drilling operations it would not be illogical to project a ten to twelve year time line for the drilling of 500 wells using the existing cable rigs (6) and the CT 211.

Yet another aspect of the cable rig technology is related to its ability to reach depths where water quality can be assured. The initial water quality tests of IPtBH Water Quality Advisor, were made available to the author. These findings indicated that a majority of the wells in Belize, Cayo, and Stann Creek districts exceeded U.S. standards for acceptability for an array of variables including hardness, conductivity iron content, etc. As a result of the poor water quality produced by; these wells, they have long been abandoned by the consuming public. It is more than probable that unless new wells are drilled beyond the first aquifer (35-60') (currently not the practice), water quality problems will endure. However in order to reach the second aquifer, wells must attain depths in the range of 150'-300' - a range currently beyond the technical capabillity of the six cable rigs and the operational experience of the drilling teams.

Rotary Rig

The CT 211 was first encountered in Punta Gorda on February 14th; during this observation visit, certain negative features of the rig were noted. Among these were the basic inadequacy of the CT 211 in terms of its: structural strength, rotation head, and mud pump. A summary of the CT 211's technical deficiencies is presented in Appendix A. This initial assessment was confirmed three weeks later when the rig was put into operation at the Puppy Show well site. Drilling started with a ø 8" Tricone bit which went through the clay formation with no problem, but upon reaching 40' it became more difficult and consequently a harder thrust on the bit was necessary to maintain the drilling rate. The crew then applied 1000 PSI pressure with no problems at the 50' level. However beyond 50' crew encountered cemented conglomerate and drilling slowed considerably . Upon applying 1500 PSI pressure, the rig lifted up 6' from its base almost toppling over. Power was reduced to 1000 PSI for the next 30'. Switching to the down hole hammer ø 6" with 500 PSI, the rig achieved a drilling rate of 1' per minute with a rotation speed of 6RPM (maximum).

Power Head

The limited power head of 30 RPM is inadequate for hard formation tricone drilling. Rotary drilling requires a thrust of 2000 to 5000 PSI in hard ground at 60 RPM. In soft formations 1500 PSI at 80 RPM, and 2000 PSI at 70 RPM. If in hard terrain, the power head cannot deliver the necessary thrust with required RPM the drill undergoes excessive heating and will not drill satisfactorily.

The formula for calculating the penetration capacity of a rig is as follows:

Drilling = V+P+v= penetration
V=speed
P=thrust on the tool
V=volume and flow of the mud pump

The lack of power of the rig prevents correct mud drilling. Moreover one cannot mud drill with a down hole hammer - nor is a down hole hammer recommended for soft formations (heavy risk of jamming and slow progress). A down hole hammer must work with a constant foam flow, the CT 211 does not have it. Therefore there is a great risk of losing the tool and the tubing in the hole. The constant foam flow is called "Vaposol Pump" with a flow of 0 to 400 gallons/minute; a down hole hammer must have a constant lubrication system during operation. Otherwise there is high risk of the piston seizing in its sleeve and the check valve as well as the two half moon retaining the hammer. Those two elements are strictly necessary. The CT 211 is a machine 15 years behind state-of-the-art technology in the USA.

To achieve good drilling performance with a Tricone, the mud flow is of prime importance, its accounts for 50% of the perforation of the formation which needs in certain cases the incorporation of jets in the orifices of the Tricone, giving greater drilling speed. To accomplish this one must have a Gardner Denver mud pump (7x10 with a diesel engine of at least 150 HP mounted on a trailer).

NOTE: If this pump is ordered make sure that the pump includes a balloon compensator, with a pressure gauge in the head of the compensator.

Spare Parts and Support Equipment

In view of the foregoing assessments of the drilling rigs currently in use, (and given the scant likelihood that they will be replaced by more efficient rigs), a strategy to enhance these rigs was developed. Based on the assumption that the operating efficiency of the rigs could be improved if they were: (1) adequately repaired and maintained and (2) provided with the appropriate supporting equipment viz. pumps bits compressors, etc., the advisor developed a parts and equipment list for the cable rigs and the CT 211 The lists have been organized by drilling rig type:

Cable Tool Rigs

It is recommended that the following tools equipment be procured for the six cable rigs:

2 J wrenches with tightening and loosening apparatus
2 chain wrenches ø 20'
2 chain wrenches ø 15'
2 chain wrenches ø 12'
3'of chain supply
1 complete box of sockets
2 pipe wrenches ø 4'" open (wide)
2 pipe wrenches ø 3" open (wide)
1 set of eyes wrenches
2 crescent wrench heavy duty
2 crescent wrench small
Set of screw driver
2 sledge Hammer 20 lbs
2 pics
2 shovels
Set of welding tools (oxy) with cutter
1 bucket of graphit Grease
1 bucket of fiber Grease
5 gallon of oil (see engine) gas or diesel
1 belt (power belt) cable tool supply
Fishing tools: 1 back up
1 bell threaded (special thread)
1 tarpon
1 bell (spoon valve) ø 8"

1 bell (spoon valve) ø 6"
1 bell (spoon valve) ø 4"
1 grease pump (with flexible hose) 8" long
2 steel brushes
1 magnet ø 4" 200 lbs capacity
1 magnet ø 6" 200 lbs capacity
1 water tank (200 gal capacity)
1 trailer camper for the crew
1 small portable Generator
100' rope (heavy duty)
1 cable roll for the (cable tool machines
Pair of gloves (heavy duty for each worker
Helmets for each worker
Safety boots
1 black box (money supply) for the field
note books
blocks of millimeter paper
100 plastic bags (for samples)
1 box of plastic bottles (for sample)
magic markers to write on the plastic (red/black)
spare parts for the engine: clutch/carburetor cooler, belts spark plugs, etc.
clutch-carburetor-cooler and belts-spark plugs etc. etc.

It is to be noted that the drill collars on Orange Walk are of no use, since they are designed for use only below 300' in rotary operation, mostly for oil drills. For water drilling they are used at great depths to maintain straight drilling: the first one at 300' and every 100'; thereafter great care must be taken with knowledge of the pull back capacity of the machine; one must, when procuring a drilling machine, subtract 30% of it's power in case of blockage in the hole.
That means that a machine sold for 1000' must never be used beyond 700'. This is a general rule for safety of the machine and the personnel manning it

Rotary Drill: tools, equipment, and vehicles, necessary for the day to day operation of the CT 211 should include:

50 bags of bentonite
1 Barrel for diesel fuel
1 vibrator (see Baroid Company, Texas)
1 bell fishing tool
1 Tape fishing tool
1 Magnet (100 lbs. capacity)
1 Mud Basin
1 Mixer (with a Gun)

2 Tricones (carbide button bit) soft/medium formation (Hughes Company)
2 Tricones (carbide button bit) medium/hard formation
2 drums of graphite grease
2 drums of Hydraulic oil
Motor oil (diesel)
1 drum of all purpose grease
1 set welding equipment (oxy) with different sizes of tips and one cutter.
1 set arc welder
1 complete tool box
1 set of socket wrenches
10 feet supply of chain for chain wrench
4 kits of O rings
1 hammer (25 lbs)
4 shovels
2 pics
50 feet of heavy rope
10 bags of cement
Helmets - gloves - heavy duty boots for each worker
1 pick up truck (for emergency trips)
1 small trailer (camping) 4 people
1 water truck 5000 gallon minimum capacity
casing supply (before drilling)
Screen casing (before drilling)
Bottom caps (before drilling) conic (500 caps)
Top caps (before drilling) flat (500 caps)
100 feet ø 2 1/2" galvanized pipe with coupling
100 feet ø 1" galvanized pipe
Gravel (before drilling ø.3/8 mm/mm
First aid kit
2 sub with check valve
2 check valve spare
1 complete spool valve
1 kit spool valve
1 mud pump 7x10 (transportable)
1 compressor 300 PSI 900 CFM

<u>Mud Pump Parts for one year</u>:

4 pistons
4 sleeves (Double if you do not have cutting vibrator)
6 shafts
32 valves
32 spring valves
3 spring valves

3 pressure gauges
1 suction hose with check valve
1 hose spare (suction)
Parts for the compressor (300 PSI 900 cFGm):
4 tachometers
4 oil pressure gauges
4 voltmeters gauges
3 starters
3 air pressure gauges
3 compressor gauges
2 butterfly gauges
3 temperature gauges water
3 temperature compressor
1 generator
30 air filters
5 separators (hydraulic tank)
3 oil level gauges (hydraulic tank)
3 check valves

2 complete diaphragm systems
6 diaphragm kits
5 hand control (butterfly and diaphragm system)
3 high pressure air hoses (20 feet each with clamps)
2 air vannes (shut off)
3 compressor starters (air starter or electronic)
2 complete sets of hydraulic hoses
2 radiators (water coolers and hydraulic cooler) copper coolers not aluminum.

Inadequate Organizational Structures and Operational Protocols

In addition to the overall inadequacy of the drilling rigs and the chronic shortage of spare parts and support equipment, problems pertaining to the organizational structure (or absence thereof) of the MOH/MNR were also identified. In the absence or a centralized drilling office which has the authority to plan coordinate and supervise drilling operations new equipment and improved rig maintenance will not ensure improvements in operational efficiency.

Currently there is no properly defined organizational structure no channels of command, no management systems viz. inventory systems,and no operating protocols for drilling.

It is recommended that the first order of the day should to set up a central office of Drilling Operations with hydrology and geology units within the MNR; this office would be directed by two supervisors (hydrology and geology).

Such an arrangement would permit one engineer (hydrogeologist) to make site assessments (drilling conditions, equipment maintenance, spare parts, etc.) and then liaise with the Central Office which could then take remedial action. It is recommended that the Drilling Office be administratively autonomous from the administrative offices at the MOH/MNR. Lines of managerial communication between the central office and field should be direct since any loss of time during drilling operations can prove costly.

On site the drill master must have exclusive responsibility. He should maintain a daily log of drilling activities viz. depth diameter, soil from actions, etc. A record must also be made on millimetric paper on daily basis during drilling operations; this record is of utmost importance; it provides of record of drilling dept volume and productions/quality of the water.

The water quality lab and the Drilling Office should establish formal operational ties.

Experience has shown that it is imperative that a water assay be carried out monthly at each drilling site or fountain in order to monitor contamination. The drill site or fountain must be taken apart every year and cleaned by air lift. This permits rigid quality control of the tubing, the filters, and cleanliness of the water, as well as maintenance of the pump.

The crew in charge of pumping should be equipped with a mobile compressor of 350 PSI 900 CFM, pulled by a pick-up truck. Additional equipment required should consist of: 200' of galvanized tubing ø 2.1/2" and 200' of galvanized tubing ø 1 1/4".

In addition several cases of plastic bottles are required in order to store water samples at the beginning an end of the pumping.

All samples of a drilling operation must be kept in small plastic bags (cuttings) with the indication of the site, name of the closest village, depth, equipment used (hand pump of submersible) - The water bottle samples must be labelled the same way.

The pump crew must check a monthly log of the water table level, on logarithm paper, which will provide data necessary to map the water table and its fluctuations.

It would be useful in the future to get a continuous log of the rainfall of the country in order to know the progression of the infiltration feeding the water table.

Each drilling crew must have one electric probe in order to have the static levels at the beginning and end of the drilling operation or stoppage for any reason; must be taken a few minutes before resuming operation in case of stoppage. During a pumping test the static level must be checked inside the galvanized tube set 5' above the pump (submersible or Air lift) see graphic #1 - This must be done to diminish effect of pumping turbulence on the static level checked by the electric probe. During the pumping test checks will take place at the beginning every 5 seconds during 1 minute, every minute during 5 minutes, every 5 minutes during 1 hour, every 15 minutes for 2 hours, and every hour for 8 hours. This is the only means to determine exactly the flow rate maximum and minimum of the water table and to establish the constant flow rate for X years without drying the existing water table - (thus defining the correct pump).

It would be extremely useful in the near future to install a piezometer near the drill hole in order to measure the water table without the obligation to take apart the pumps from their seat (see graphic # 2) It has been noticed that all hand pumps are set on ground level without drainage which is the perfect way to pollute the drill hole (see graphic # 3).

As explained during the training classes, it is imperative that the master driller be capable of calculating the volumes of gravel he needs before starting the drilling. If he drills a hole of ø 8 or ø 6 and lays down a casing of ø 6 or ø 4 he must know how much gravel he will need for the packing + small amount in case of caving - The calculation is easy.

For a hole of 0 8 casing of 0 6 and 100' depth - We have

$R^2 \times D$ = Volume
= 3.14
R^2 = 2" x 2"
D = 100'
Volume = 3.14 x 2 x 2 100 =

It is also imperative that the annular space be of ø 2" to 2 1/2" unless one is 100% sure of establishing a bridge half-way down the casing if not the hole will be lost if you do not reach the screens for water filtration.

In case of a bridge the following operation is to be carried out with the absolute necessity of a mud pump or jet: connect the hose on the mud pump special connection, pump clear water only with the pipe in the annular break until it reaches the bridge, the jet breaks the bridge an will push it in the bottom of the hole; one must be very careful with the pump pressure, the is high risk of severe accident, the pressure in the 1 1/2' pipe can throw a man clear several meters to alleviate this risk you must have on hand a stock of very slow pump pistons with slow rising until you reach a humanly tenable pressure (see graph) sufficient to brake the bridge. To achieve adequate packing, the use of air lift is required; one has to introduce it to the screen height in order to have the water column contained in the casing under pressure, the air under high pressure will raise the water column in the annular space and the casing thus enabling the gravel to fall down when you shut the air inlet at the time the water rises to the surface. If one follows this procedure a 95% chance of obtaining a good packing will result. The compressor is an absolute must. Currently the tubing and packing activities of the drilling operations leave a lot to be desired. The efficient organization of these activities must be addressed in the shortest time possible, to guard against further erosion of drilling operations.

V. RECOMMENDATIONS: A RECAPITULATION

In addition to the overall inadequacy of the drilling rigs and the chronic shortage of spare parts and support equipment, problems pertaining to the organizational structure (or absence thereof) of the MOH/MNR were also identified. In the absence of a centralized drilling office which has the authority to plan, coordinate and supervise drilling operations, new equipment and improved rig maintenance will not ensure improvements to operational efficiency.

Currently there is no properly defined organizational structures, no channels of command, no management systems, viz. inventory systems, and no operating protocols for drilling.

Therefore, it is recommended that Central Office of Drilling Operations with hydrology and geology units with the MNR be established. This office would be directed by two supervisors (hydrology and geology) or seven one hydrologist.

Such an arrangement would permit one engineer (hydrogeologist) to make site assessments (drilling conditions, equipment maintenance, spare parts, etc.) and then liaise with the Central Office which would then take remedial action. It is recommended that the Drilling Office be administratively autonomous from the administrative office at the and field should be direct since any loss of time during drilling operations can prove costly. The Central Office should have a draftsman.

On site the drill master must have exclusive responsibility. He should maintain a daily log of drilling activities viz. depth, diameter, soil from actions, etc. A record must also be made on millimetric paper on a daily basis during drilling operations; this record is of utmost importance; it provides a record of drilling depth, volume and productions/quality of the water.

The water quality lab and the Drilling Office should establish formal operational ties. There should be a separate crew for well monitoring and water sampling, responsible to the lab.

Finally, the equipment must be upgraded. Ideally one would recommend buying a rotary machine (Ingersoll-Rand DH60 Cyclone, with certain modifications; a separate mud pump and separate compressor). with 4-wheel drive. A half-track would be expensive, but would permit year round use. Each crew should have an electric probe to monitor water levels while drilling.

Vehicles are needed: a car for the drill master, a small pickup for emergencies, a small pickup for the water sampling crew, a large truck for transport of casing, tools, etc., and a water truck with 3000 gal capacity (13,000 litre).

A camp setup is needed for 24 hours shifts, to include kitchen and bed, a samll generator (camp and night drilling), a welding kit (oxygen) and First Aid Kit.

VI. APPENDIX A

1. SANITARY HAND PUMP INSTALLATION with piezometric pipe for water table fluctuation measurement by acoustic well probe.

2. TOP HEAD AIRLIFT to clean the well after completion.

3. BRIDGED WELL and BRIDGE BREAKING PROCEDURE # 1 to ensure proper filtration.

4. BRIDGED WELL and BRIDGE BREAKING PROCEDURE # 2 to ensure proper filtration.

5. CROSS SECTION OF HOLE OPENER to widen an existing hole.

6. CROSS SECTION OF SUB showing CHECK VALVE and its proper position

7. INTERNATIONAL DIMENSIONS STANDARDS and RECOMMENDED EQUIPMENT FOR FINISHING THE WELL WITH GOOD FILTRATION OF THE WATER.

8. PROPOSED DAILY FIELD SHEET.

9-13 PERFORATION LOGS to show speed of perforation, comparing cable tool rigs and rotary rigs.

14. GEOLOGICAL SURVEY (PROVISORY) of Belize.

Pump installation (against pollution) with piezometric pipe (To monitor the water table fluctuation with electrical sound

DIAGRAM # 1

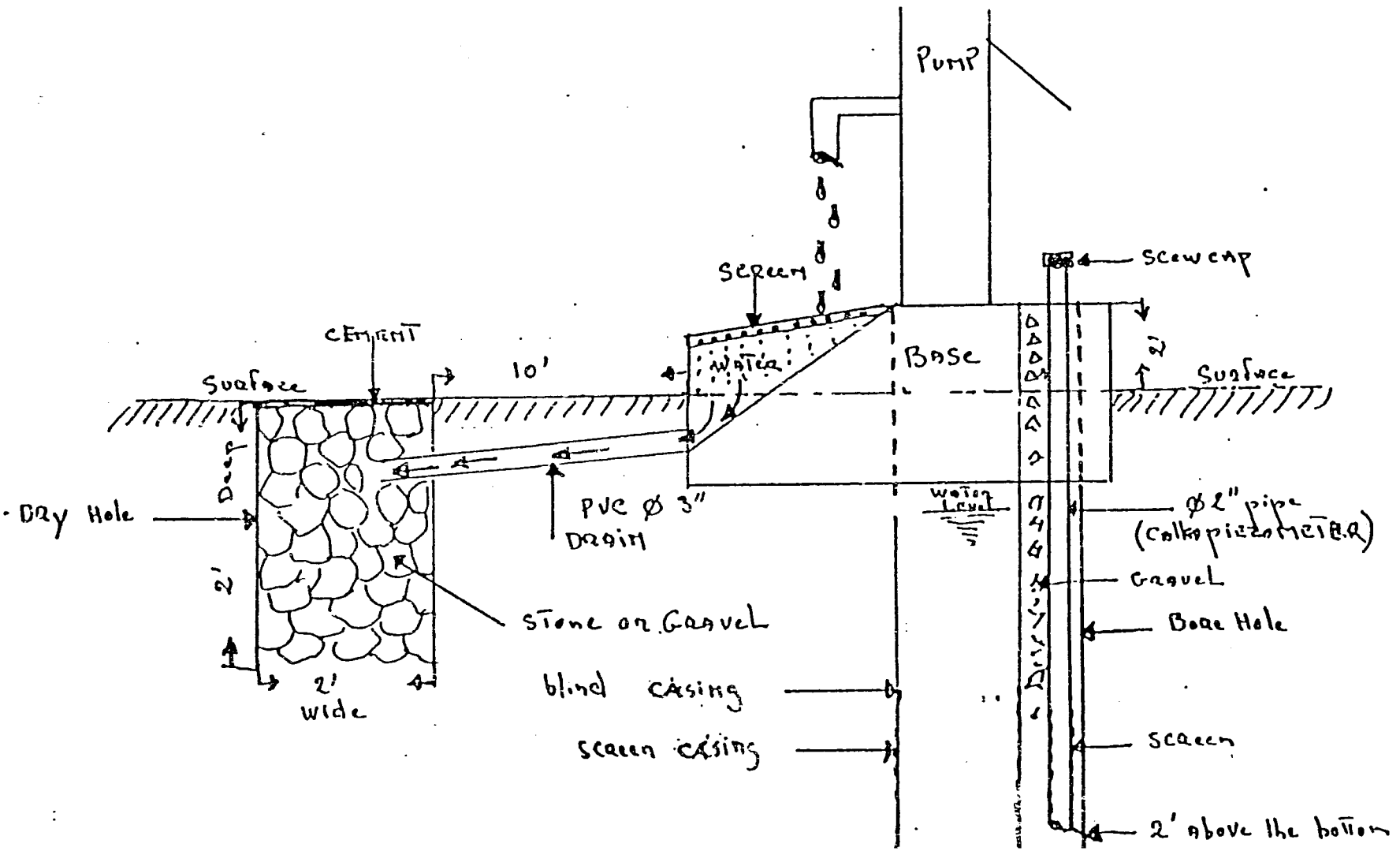

DIAGRAM # 2

Top Head Air Lift

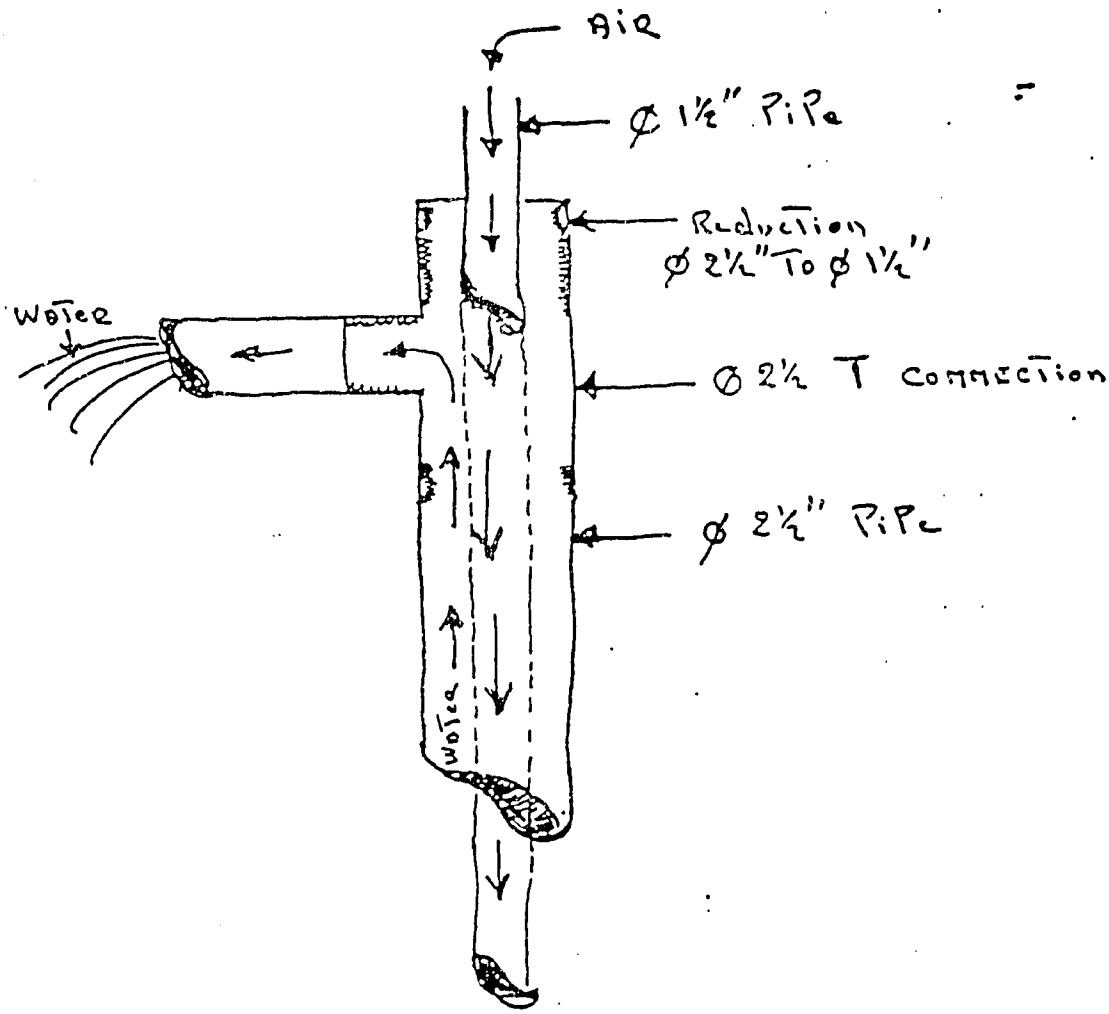

DIAGRAM # 3

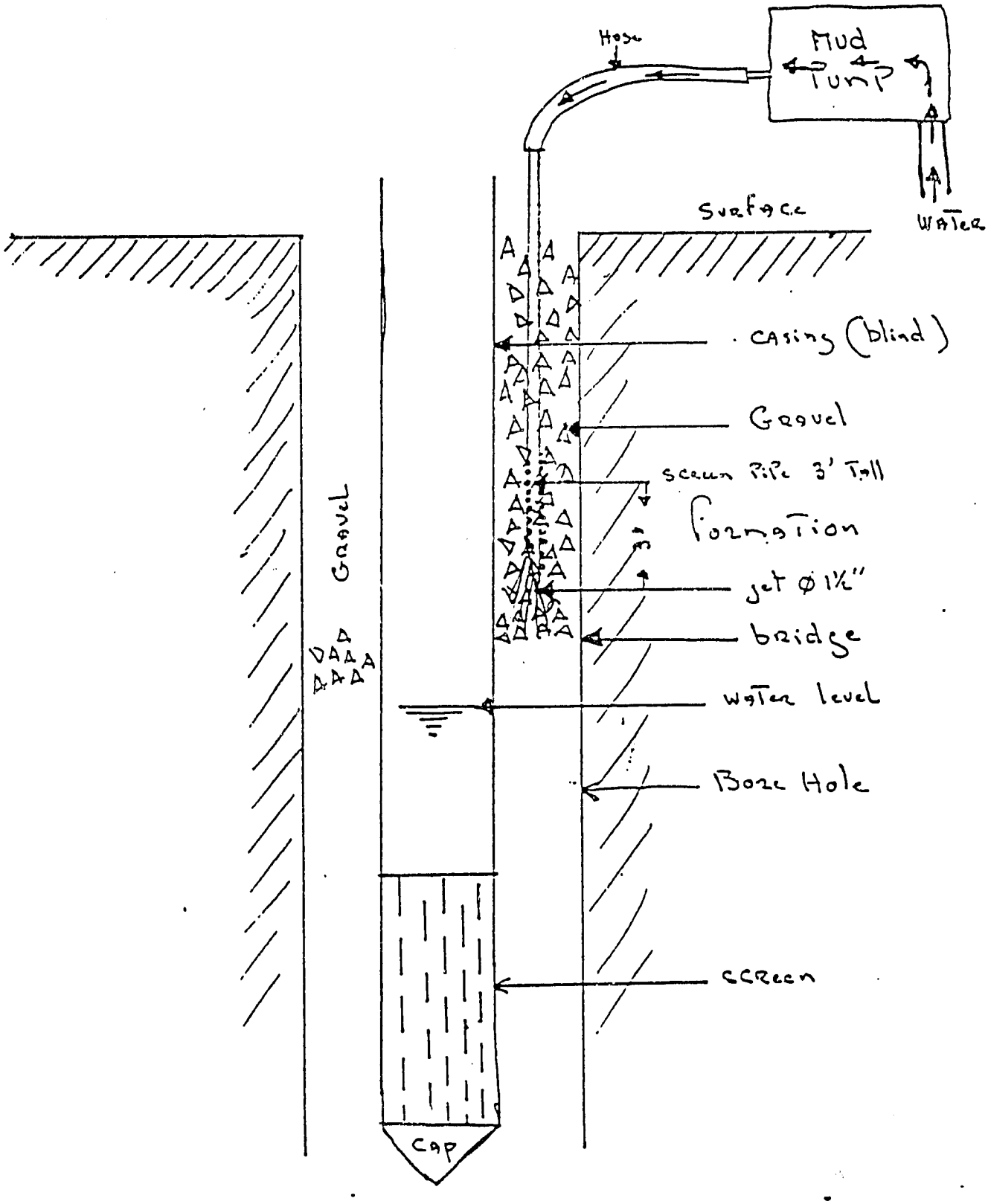
Hose
Mud Pump
Water
Surface
casing (blind)
Gravel
screen Pipe 3' Tall
Formation
jet ø 1½"
bridge
water level
Bore Hole
screen
Cap
Gravel

DIAGRAM # 4 (Air Lift)

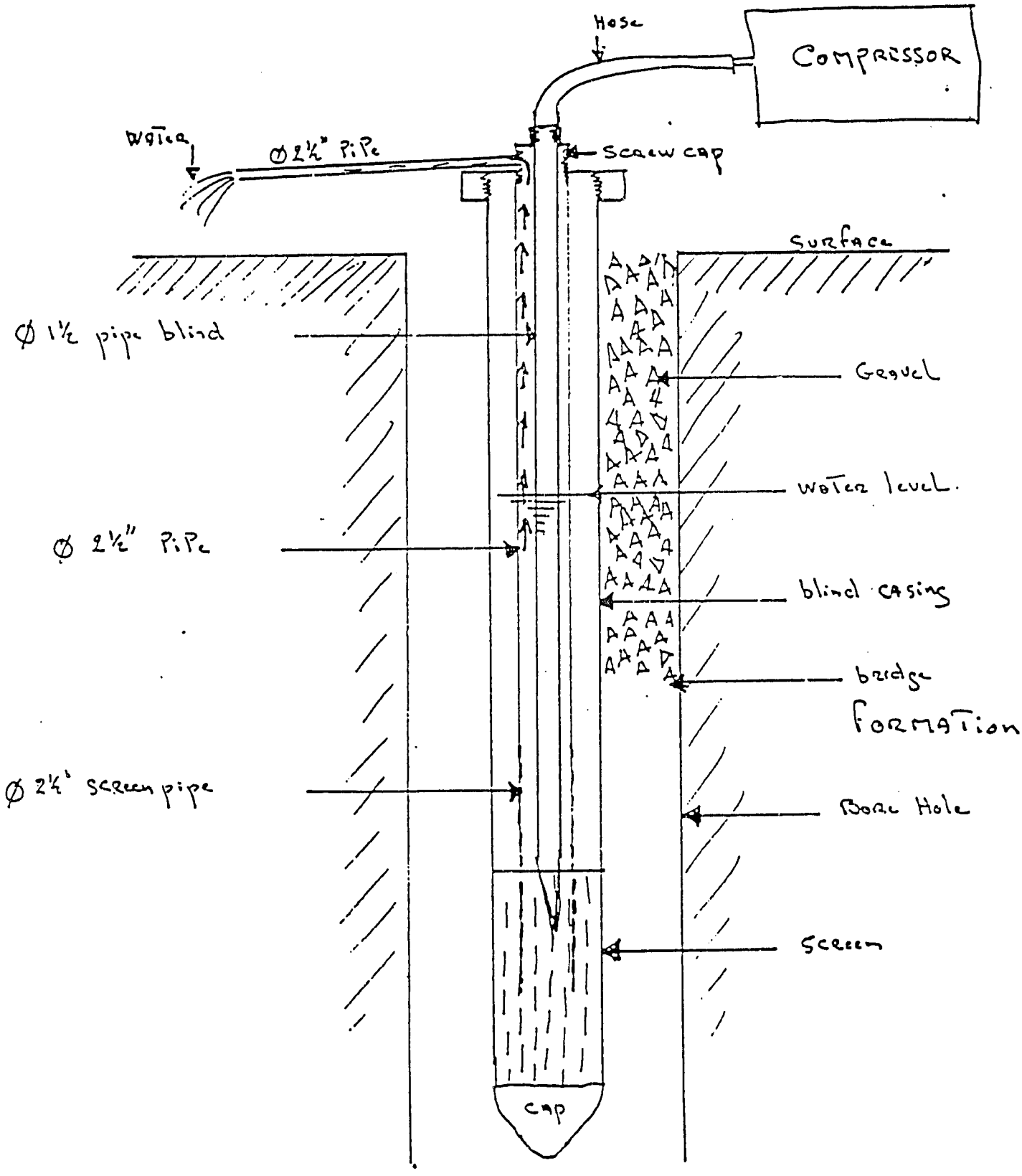

DIAGRAM # 5

OPENER VIEW

EXAMPLE To open Ø 6" Hole To Ø 8½"

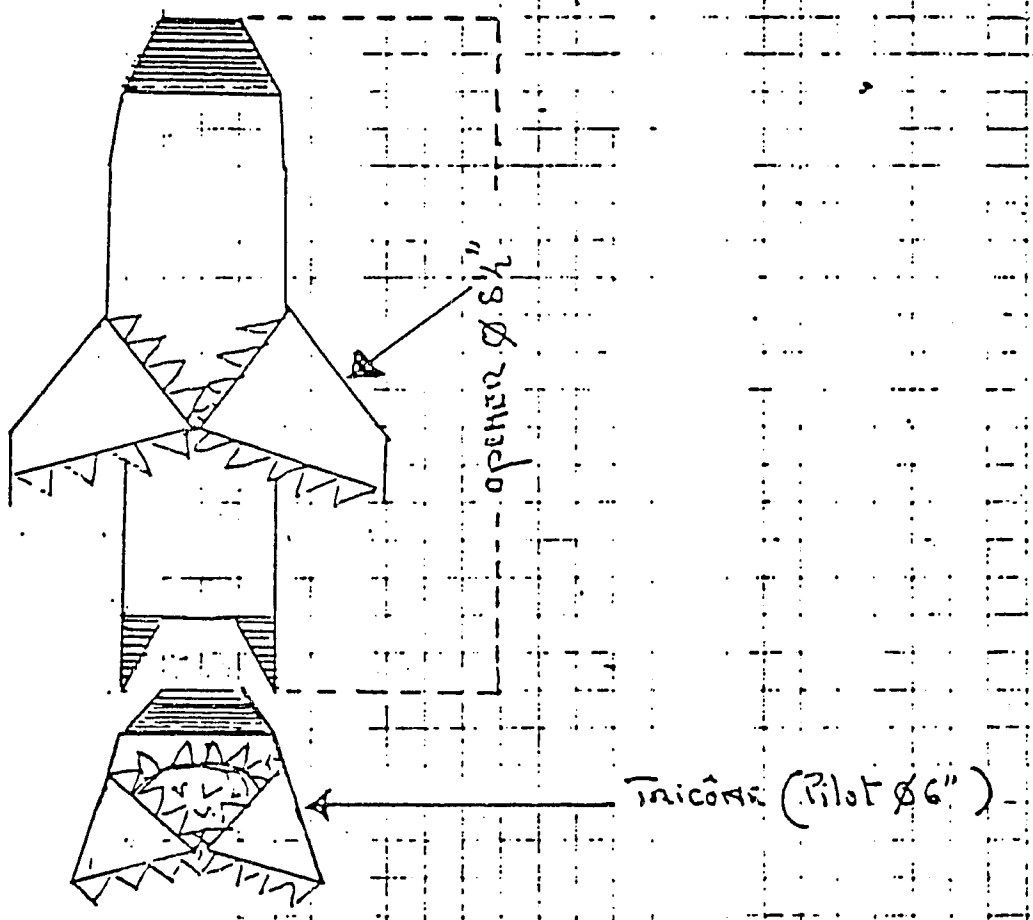

DIAGRAM # 6

Check valve view in the sub

Extremely important for fixed drilling

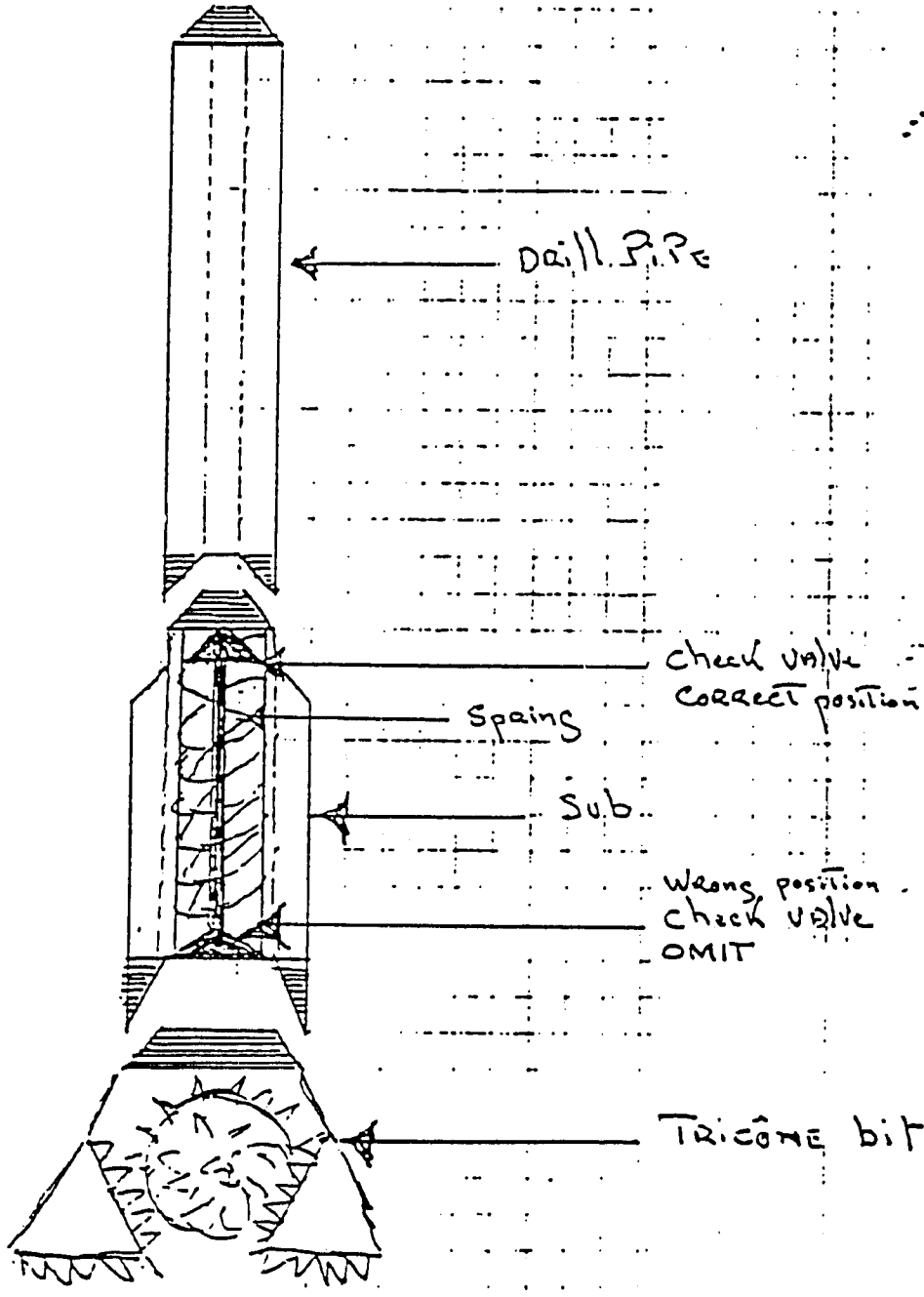

7 - INTERNATIONAL DIMENSION STANDARDS:

ø HOLE	ø OPENER	ø CASING
17½ in.	22 in.	18 in.
15 in.	17½ in.	15 in.
13 3/8	15 in.	13 3/8 in.
12 1/4 in	15 in.	12 in.
9 7/8 in.	12 1/4 in.	10 in.
8½ in.	12 1/4 in.	10 in.
7 7/8 in.	10 in.	8 in.
6 in.	8½ in.	6 in.
5 in.	7 7/8 in	6 in.
4 in.	6 3/8 in.	6 in.
6 in.	---	---

RECOMMENDED EQUIPMENT IN THE HOLE for good water filtration:

Screen casing: Johnson
Gravel (packing): 3/8 mini/maxi (washed gravel)
Tricone Bit: Hughes carbide tricone button bit (do not use Varel)

8. PROPOSED DAILY FIELD SHEET

Well at.....In.....County of.....
Name of Place City, village or town

Owner.....P.O. Address.....

Depth of well.....Diameter.....Yield.....Was welldisinfected?.....
ft in. gpm yes or n

Amt. of casing above ground.....Below ground..... Well seal.....
in. ft cement grout

Type of well.....Drilling method.....Was Well dynamited.....

Static Water Level..... 1 Stage.....
2 Stage.....
3 Stage .....

Pumping Rate GPM..... 1 Stage.....
2 Stage.....
3 Stage.....

Duration of Test (House..... 1 Stage.....
2 Stage.....
3 Stage.....

Water Test before pumping .....

Water Test at end of test .....

Water at end of test:

Clear.....Cloudy....Turbid.....
Recommended depth of
pump in well, ft below
grade.....

Wells in sand & gravel:

Sand Eff. size.....mm
Unif. coef. .....
Length of screen.....ft
Diam. of screen .....in.
Type of screen .....
Screen openings.....X.....

Formations Penetrated

Kind, thickness, and
if water bearing

9 - 13 ILLUSTRATIONS

Cable Tool # 1 February 16 / 1987 To 18/1987

HOLE # I Ø 8" BERMUDIAN LANDING

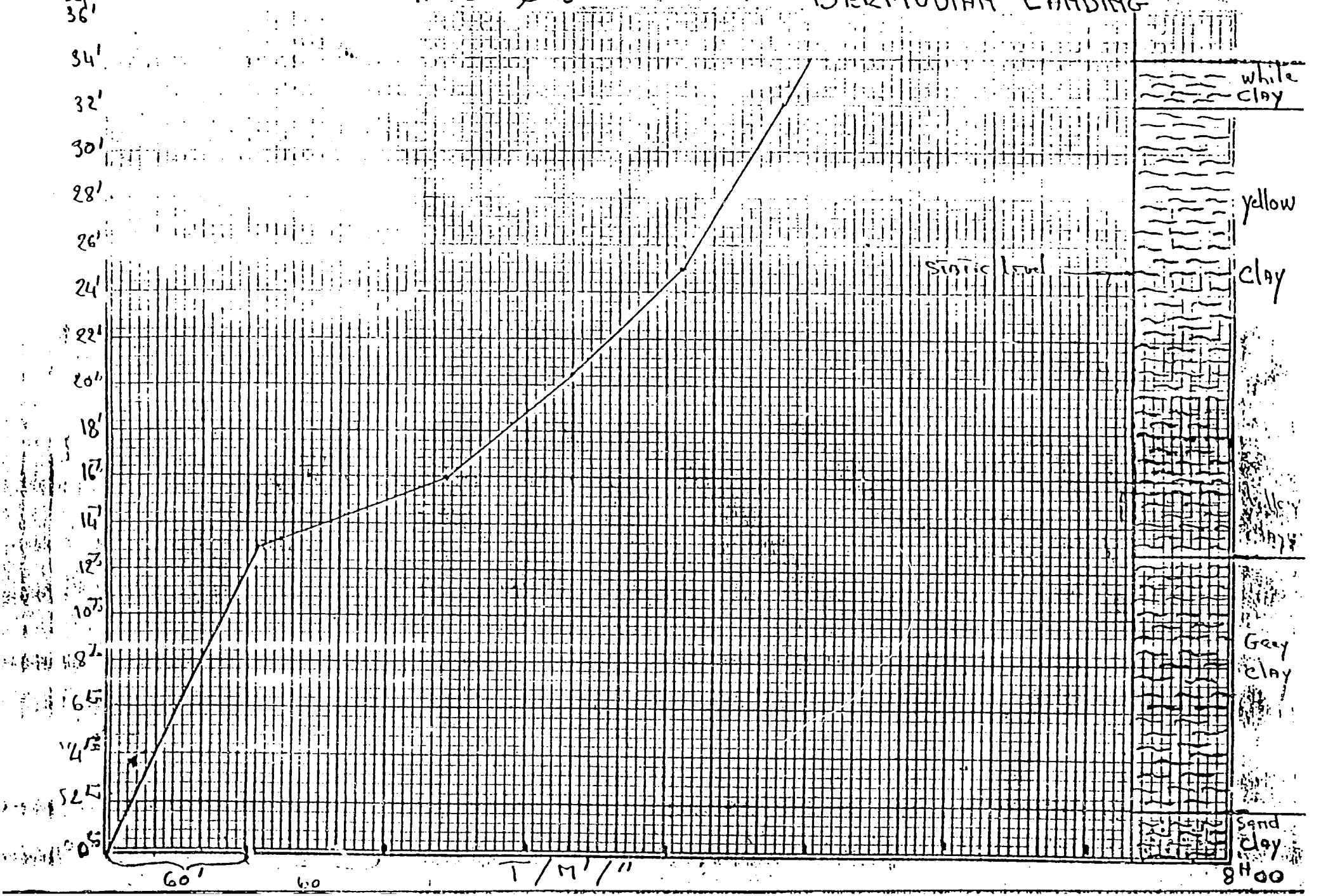

Cable Tool # 2
Hole Ø 8"

February 20/1987 To 85/1987
SAN ANTONIO CAYO DISTRICT

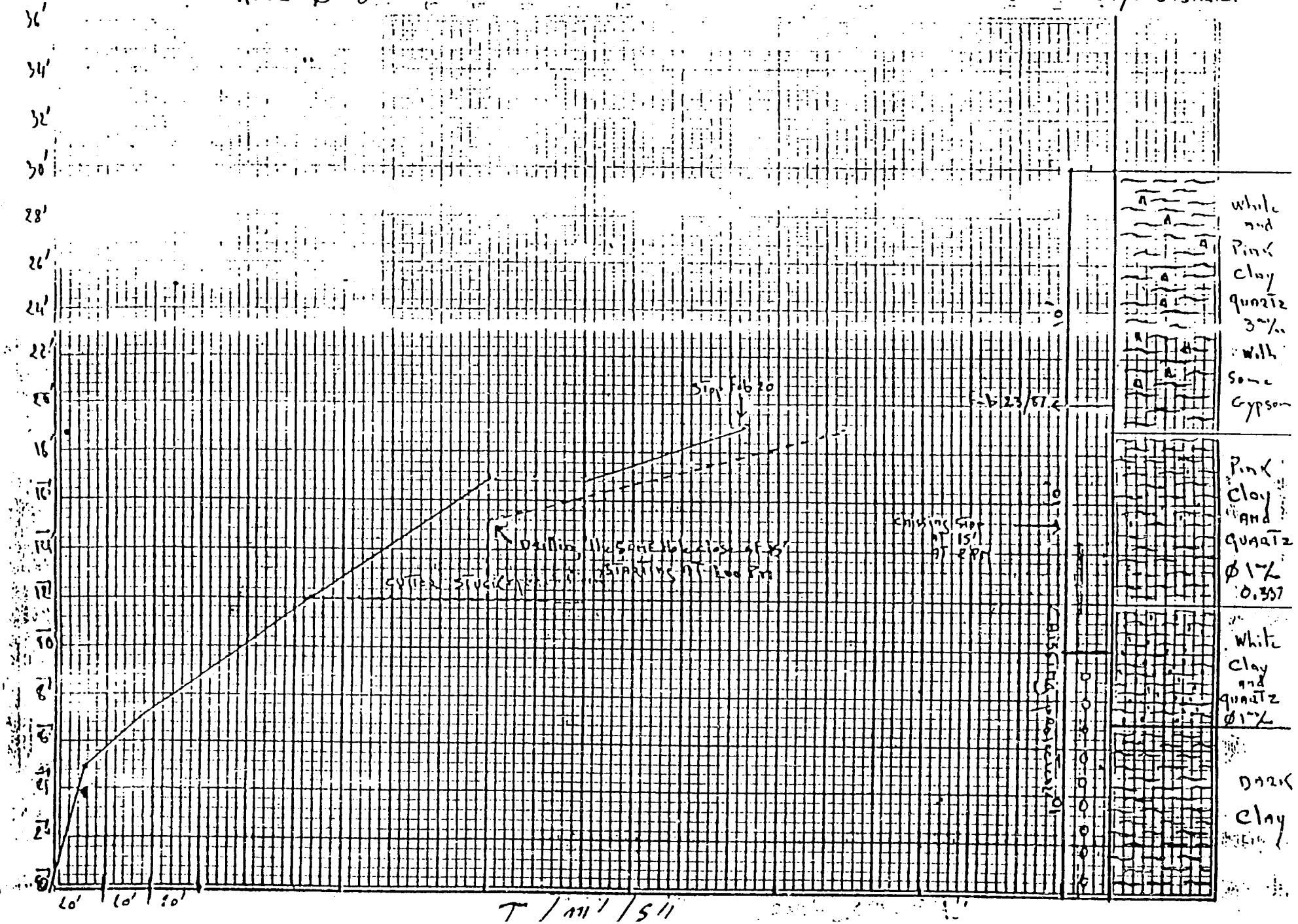

Depth Cable Tool #1 February 18/1987 To March 5/1987

Hole #I Ø 8" Bermudian Landing

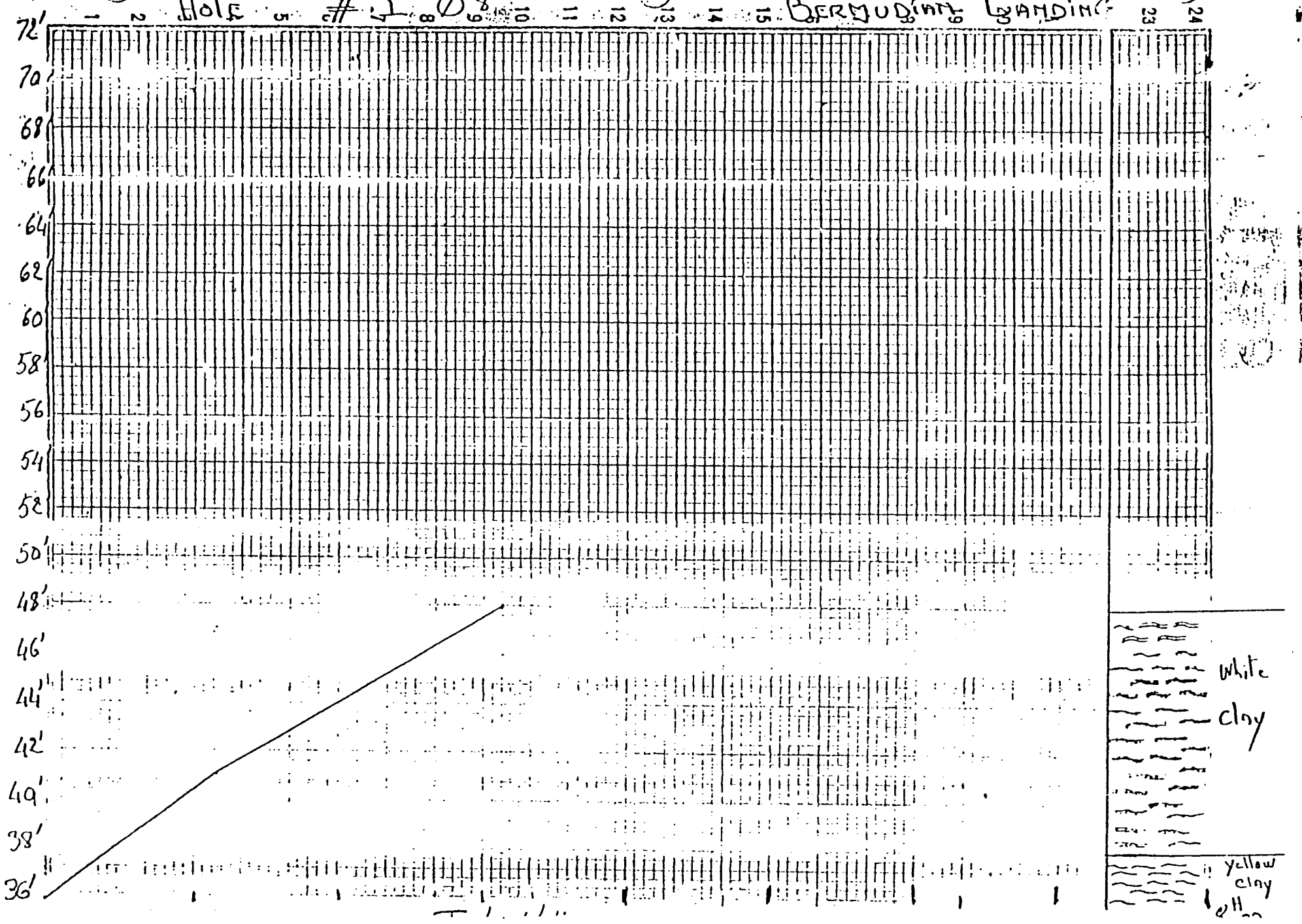

Cable Tool #3

February 26/87 To March 2/87

Hole Ø 8"

Silk Grass (Singer Creek District)

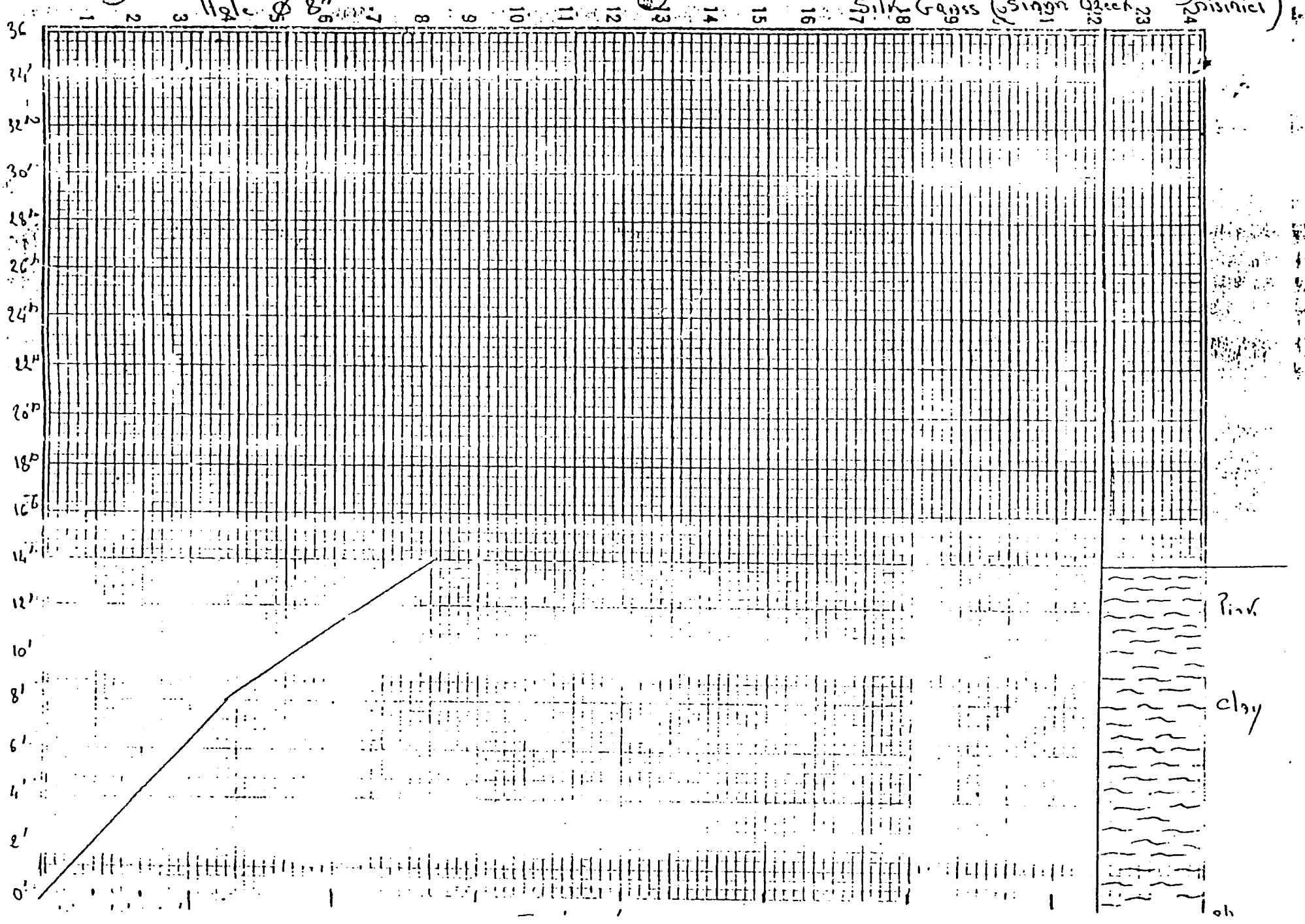

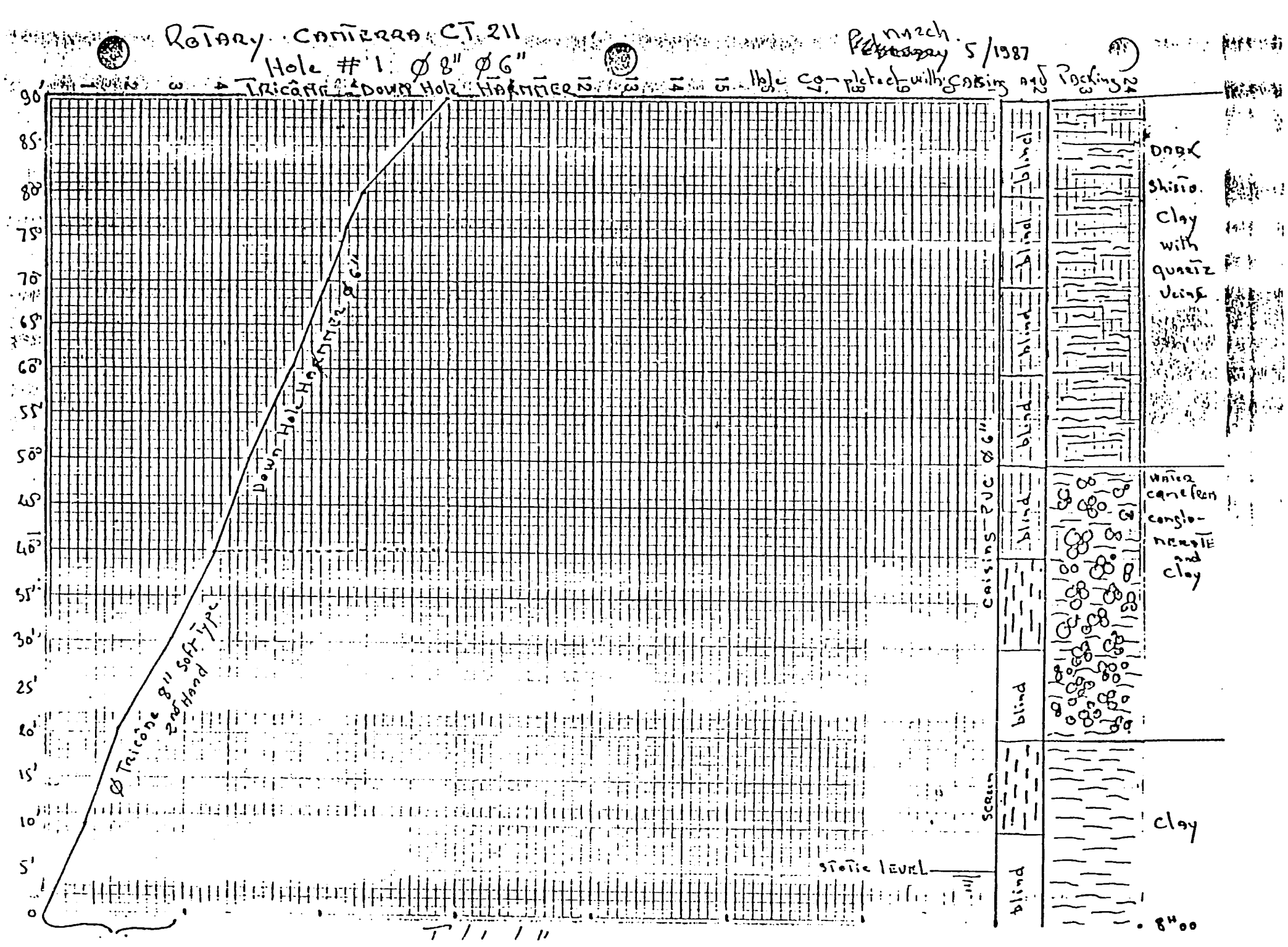

ROTARY CANTERRA CT 211
Hole #1 Ø 8" Ø 6"
March 5/1987
TRICONE DOWN HOLE HAMMER
Hole completed with Casing and Packing
Down Hole Hammer Ø 6"
Ø Tricone 8" Soft Type 2nd Hand
Casing PVC Ø 6"
Screen
Static Level
blind
Dark Shisto. Clay with quartz Veins
Water came from conglomerate and clay
Clay
8H00

14 - GEOLOGICAL SURVEY

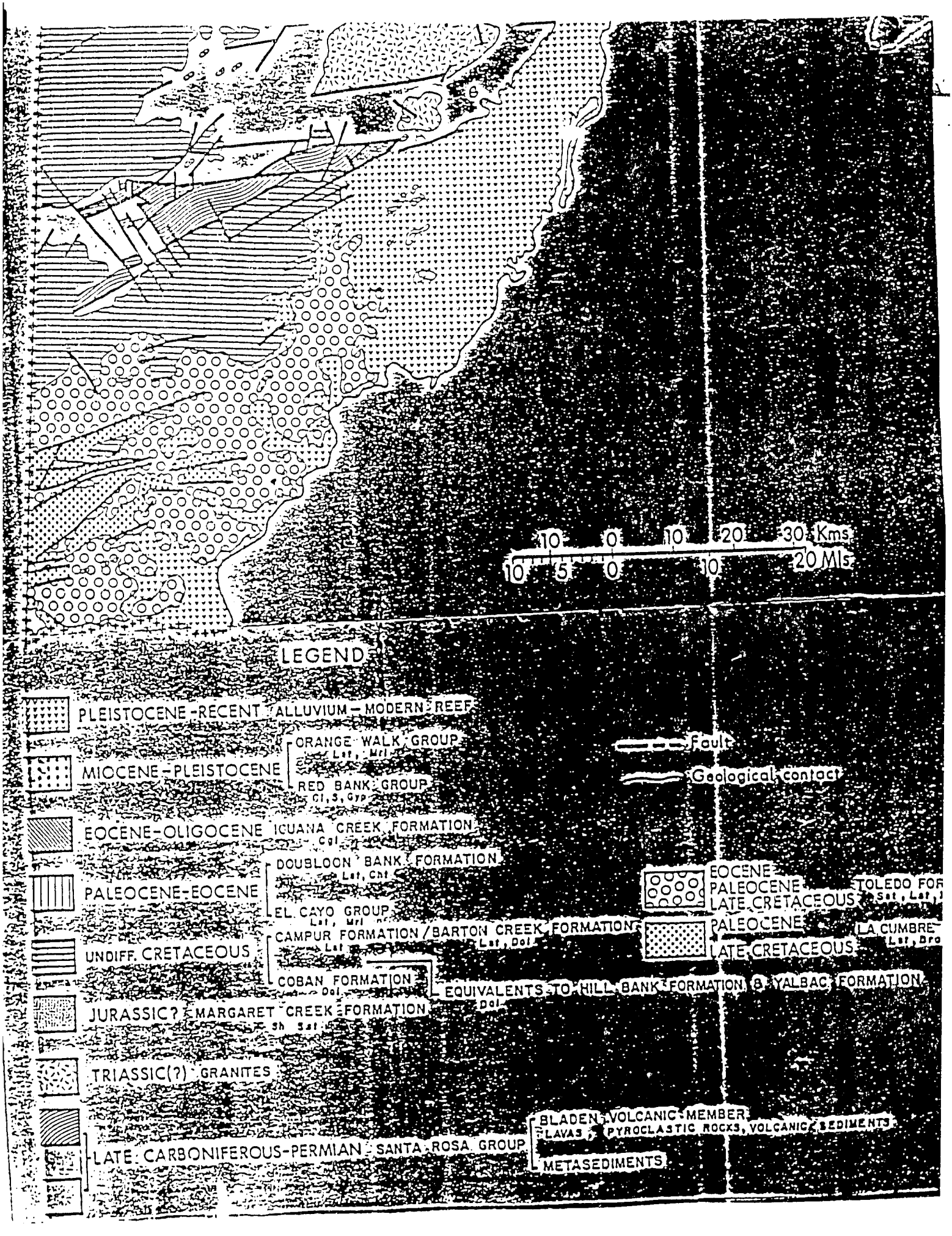
10 0 10 20 30 Kms
10 5 0 10 20 Mls
LEGEND
PLEISTOCENE-RECENT ALLUVIUM – MODERN REEF
MIOCENE-PLEISTOCENE
ORANGE WALK GROUP
Lst, Mrl
RED BANK GROUP
Cl, S, Gyp
EOCENE-OLIGOCENE IGUANA CREEK FORMATION
Cgl
PALEOCENE-EOCENE
DOUBLOON BANK FORMATION
Lst, Cht
EL CAYO GROUP
Lst, Mrl
UNDIFF. CRETACEOUS
CAMPUR FORMATION / BARTON CREEK FORMATION
Lst, Dol
COBAN FORMATION
Dol
JURASSIC? MARGARET CREEK FORMATION
Sh Sst
TRIASSIC(?) GRANITES
LATE CARBONIFEROUS-PERMIAN SANTA ROSA GROUP
BLADEN VOLCANIC MEMBER
LAVAS, PYROCLASTIC ROCKS, VOLCANIC SEDIMENTS
METASEDIMENTS
Fault
Geological contact
EOCENE
PALEOCENE
LATE CRETACEOUS
TOLEDO FOR
Sst, Lst
PALEOCENE
LATE CRETACEOUS
LA CUMBRE
Lst, Bro
EQUIVALENTS TO HILL BANK FORMATION & YALBAC FORMATION
Dol

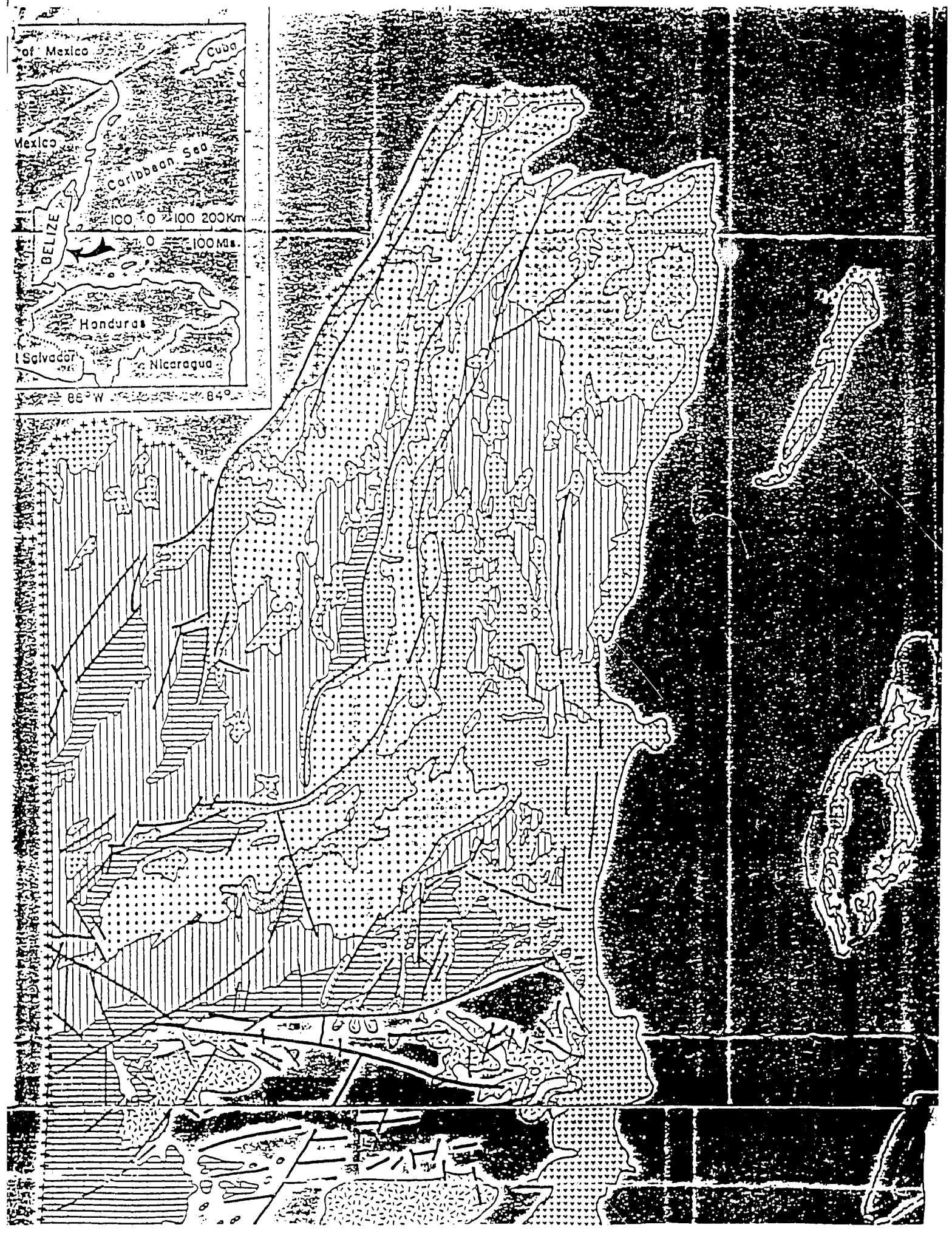
of Mexico
Cuba
Mexico
Caribbean Sea
100 0 100 200Km
BELIZE
0 100 Mls.
Honduras
Salvador
Nicaragua
86° W
84°