PN-AAX-928 6500041
BT 7.1.1
ALIZAR

Canun El Duga:
Improved Charcoal Stoves
for the Sudan

By:

Gaafar El Faki Ali, Director, Technology Development and
Dissemination Unit, RERI,
and
Claudia H. Huff, Dissemination Consultant, Georgia Tech
Research Institute

December 1984

CANUN EL DUGA:
IMPROVED CHARCOAL STOVES
FOR THE SUDAN

Acknowledgements

Executive Summary

1. Introduction 1

   1.1 Project Objectives
   1.2 Project History
   1.3 Design Characteristics of the Improved Charcoal Stove

2. Laboratory Testing 6

3. Field Testing. 7

4. The Stove Contest. 11

5. Dissemination. 14

6. Conclusion 18

Related Publications 19

ACKNOWLEDGEMENTS

The authors gratefully acknowledge the contributions to the work described herein of all staff members of the Technology Development and Dissemination Unit, Renewable Energy Research Institute. In particular, appreciation is extended to Fadia Mahjoub who performed an analysis of results and developed early drafts for sections of this report.

EXECUTIVE SUMMARY

The Sudan Renewable Energy Project (SREP), an activity of the Energy Research Council, began work on improved metal charcoal stoves in early 1983. The stove project sought to commercially develop and disseminate a basic stove design developed by the University of Khartoum and Afhad College for Women.

Laboratory and field tests showed the stove to be 39% more efficient than the traditional metal stove, and acceptable in normal cooking practices. The new design was easy to use, reduced charcoal consumption, and decreased cooking time. Most important, it utilized small charcoal pieces that were normally thrown away. Families using the new stoves saved an average of 24 piasters per day on charcoal costs. At this rate, a stove sold at LS 15 would pay back its initial cost in just over two months.

Encouraged by the test results, SREP held a stove manufacturing contest in Khartoum to interest artisans and other metalworking enterprises in the new stove. Two production versions of the stove emerged, an open-draft model close to the original design, and a new, controlled-draft model. The contest also promoted public interest in the new stoves.

After the contest, SREP initiated a stove dissemination program that included illustrated brochures for stove users, local market demonstrations, media presentations, and recently, a training workshop for stove producers. During this period the new stoves came to be known as canun el duga, because of their use of duga, or small charcoal pieces.

At present, canun el duga are manufactured and distributed commercially without any market intervention by SREP staff at a rate of over 500 per month. Production and sales figures are increasing steadily.

The project's success is due to its emphasis on using existing metalworking artisans and stove sales channels. The necessary innovative and marketing skills were found in the craftsmen and retailers already working with charcoal stoves. Working with this established capability, SREP was spared the need to spend considerable time and funds on infrastructural development and moved directly to sales promotion.

1. INTRODUCTION

1.1 Project Objectives:

The charcoal stove project was designed to meet the following objectives:

- Continue development of design improvements for the charcoal stove.
- Conduct laboratory and field tests for several models of the charcoal stove.
- Locate, train and otherwise encourage at least two stove manufacturers in the production of the improved designs.
- Develop a campaign for widespread dissemination of the improved designs.

1.2 Project History:

The improved charcoal stove project history goes back to the year 1979. This is when a joint effort between Dr. Yahia Hassan Hamid of the Faculty of Engineering, Khartoum University, and students at Afhad University College for Women (AUCW) participated in the introduction of a stove capable of reducing charcoal consumption.

The first initiative was in the form of a research programme by AUCW students on "Traditional Energy Utilization" conducted in 1979-80. During this phase, experiments were conducted on three traditional cooking devices which are commonly used in the Sudan. These include:

- traditional charcoal stove
- mud stove
- ladya (three-stone open fire)

These experiments confirmed the traditional stove as the most popular cooking technology. The research also showed the need for improvements and modifications designed to increase efficiency and reduce waste.

On the basis of these preliminary findings a second phase of the project was developed for the period 1980-82. Financial support for this effort was secured from the World Health Organization. The emphasis at this stage was on the investigation of domestic energy use and the possibility of introducing an improved stove in rural areas. Designs of improved stoves were constructed and tested under both laboratory and field conditions. All the tests performed gave higher efficiencies for the new designs when compared with the traditional stove.

Field tests were first performed on a very limited scale and involved only a few families in Northern Omdurman and Algezira Slang. Later (1981-82), field tests were expanded to cover fifty families in El Fitihab and Althawra.

In addition to demonstrating the high efficiency of the new design, the field tests clearly indicated the receptiveness of the housewives to the new stove. Housewives expressed their willingness to change to the new stove once it became available at the market.

The third phase started with the adoption of the stove project by the Sudan Renewable Energy Project (SREP) under

the umbrella of the Energy Research Council (ERC) in May of 1983. The main objective of SREP is to popularize the improved charcoal stove on a national scale. To realize this objective, the stoves were subjected to further lab and field tests before an acceptable design was chosen to be used for a national contest for artisans and manufacturers. On the basis of the test findings and contest results, a dissemination strategy was developed and implemented. A brief description of these activities is presented below, following a general description of the design characteristics of the improved stove.

1.3 Design Characteristics of the Improved Charcoal Stove

The improved design is characterized by four basic features:

- charcoal consumption is decreased
- cooking time is reduced
- ease of use
- use of small pieces of charcoal

Two versions of the improved stove were developed. One version employs an open draft and consists of a portable fire-grate made of two compartments (see figure). The inner compartment is for larger-sized charcoal pieces, while the outer compartment is for smaller pieces which are normally discarded as unusable. The outer compartment acts as a shield to minimize heat losses. The smaller pieces themselves form a very effective insulation layer. The fire-grate is made of mesh wire. Primary and secondary air supply is maintained by including two openings in this design. The inner cylinder at the bottom is where paper is burned to ignite the fire.

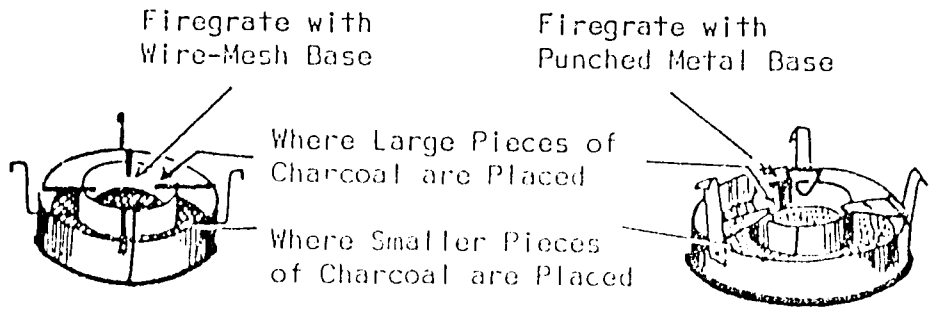

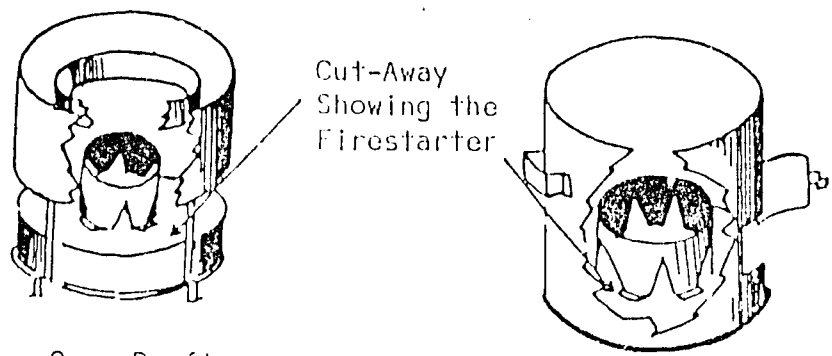

Open-Draft
Model

Controlled-Draft
Model

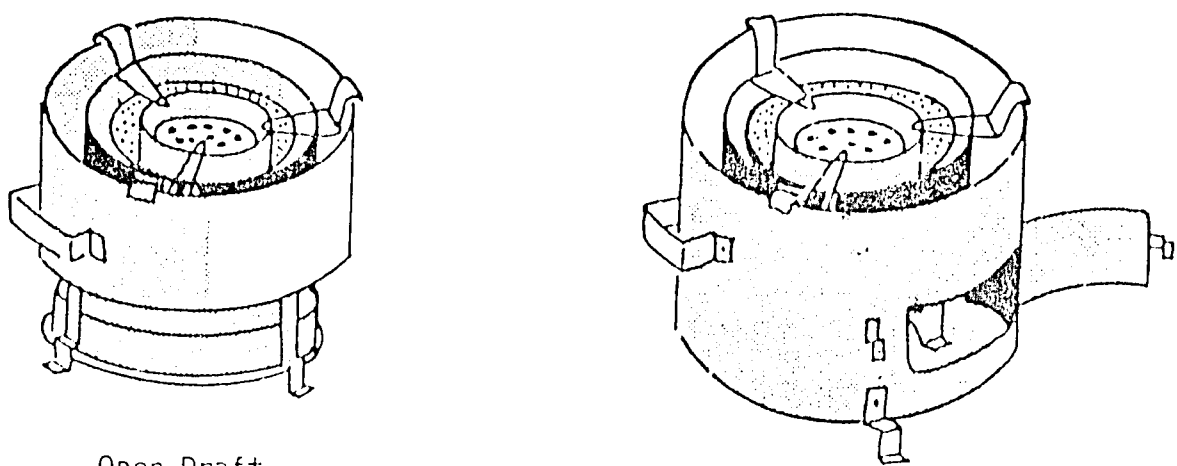

Open-Draft
Model

Controlled-Draft
Model

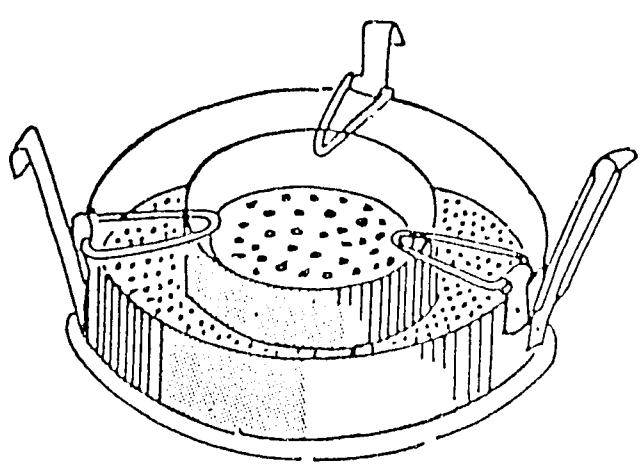

The second version, a controlled-draft stove, generally resembles the open-draft design described above with two differences. First, the fire-grate is made of perforated steel sheet metal instead of the fragile mesh-wire used in the open-draft design. Many manufacturers have opted for the durability of the perforated sheet for the fire-grate, even for the open-draft design. Additionally, this stove was designed with a door to act as a controlling mechanism for air entering the stove. This is reflected in slightly higher efficiencies and more burning time, but also causes slower fire starting.

2. LABORATORY TESTING

Lab testing involved both versions of the improved stove as well as the traditional stove. Water-boiling tests were conducted and average efficiencies were calculated for the different stoves. The results of these tests, conducted in 1984, are shown in the table below.

Table 1. Average Laboratory Efficiency of Stoves

Stove	Average Efficiency (%)
Traditional Stove	17.8
Open-Draft Improved Stove	24.5
Controlled-Draft Improved Stove	25.2

As can be seen, the two improved versions of the charcoal stove are almost equivalent in terms of efficiency. When compared with the traditional stove, the improved stoves are approximately 39% more efficient.

In all the tests performed, typical Sudanese kitchen conditions were simulated as much as possible and the same pot was used. Efficiency figures were calculated by measuring the water evaporation and charcoal consumption.

These encouraging results suggested further field tests of the stove under real household conditions.

3. FIELD TESTING

Field testing offers an effective mechanism for confirming laboratory results under real-life conditions. In general, the following advantages are associated with field testing:

- Confirmation of the lab results by actual results obtained through using stoves at home.
- Popularization of the improved stove among the test users.
- Early detection of any defects or other problems gleaned from comments voiced by the users.

Field tests of the improved stove designs started in 1983 and covered six areas within Khartoum Province:

Hillat Hamed
Shambat
Althawra
Alabassia
Nassir Extension
Khartoum Third Class Extension

Field test families were selected from a survey which covered 300 households. The families chosen were those who depend heavily on charcoal for cooking. The number of families in the sample totalled 96.

The improved stoves needed for the field tests were purchased on consignment from the following public institutions:

- Military Workshop
- Piaster Institute of Omdurman
- University of Khartoum Mechanical Workshop

Families were first supplied with traditional stoves and asked to record their daily charcoal consumption on recording sheets prepared for that purpose. These recording sheets were collected after a three-month period.

The next step in the field test process involved the provision of new recording sheets and a new improved charcoal stove of the open-draft design. Again, families were asked to record charcoal consumption on a daily basis. The recording sheets were collected after a period of one- to two-months. Results of these tests are compiled in Table 2.

The results of the field test confirmed the laboratory findings of lower charcoal consumption. At an average savings per day of 24 piasters, the pay-back for the market cost of the improved stove (about LS. 15) requires 63 days or about two months. A shorter pay-back period is calculated when only the difference in cost between the improved stove and the traditional one (about LS. 12) is considered. In this case, the pay-back is achieved in only 46 days (1½ months).

The savings are attributable not only to the thermodynamic efficiency of the new design, but also to the fact that it uses "duga," the small charcoal pieces which are unusable in the traditional stove. This has an important implication, particularly for sack users, since every sack contains 20% to 30% duga which is normally discarded.

Important observations made by housewives about the new stove are:

- It allows reduced cooking time when compared to

Table 2. Charcoal and Monetary Savings of Improved Stoves

Type of User (Number of Families)	Charcoal Consumption (kg/day)		Savings	
	Traditional Stove	Improved Stove	kg Charcoal/Day	Piasters/Day
Sack Users (36)	3.08	2.37	0.71	17
Mallwa Users (5)	3.10	2.08	1.02	41
Sack and Mallwa Users (31)	2.81	1.99	0.82	28
Average for All Users	2.97	2.19	0.78	24

the traditional stove.

- It is well-suited to the Sudanese way of cooking. There is a strong starting of the fire and it slows down at the end of the cooking process (the simmering phase).
- It is attractive in shape.
- The new stove has too much welding which may not withstand the fire. Rivetting was suggested as an alternative.

On the manufacturing side, the three chosen producers were rather slow in meeting the field test requirements for stoves, and so were judged incapable of meeting the mass production needs for a national dissemination programme. It is within this context that the national stove contest was first conceived as a method for utilizing artisan expertise from the private sector.

4. THE STOVE CONTEST

The stove contest, as an activity, is related to production development. The contest was initiated late in 1983 to serve the following purposes:

- To identify producers and assess their capabilities to manufacture the new stove.
- To identify training needs among potential producers.
- To estimate production costs in a real-life situation.
- To promote public awareness of charcoal conservation and of entrepreneurial opportunities available toward that end.

All stove manufacturers, through newspaper advertisements and field visits, were invited to submit stove prototypes to the SREP project. The following contest rules applied:

1. All contestants would produce one or more new stoves based on the experimental design.
2. Contestants were free to use whatever materials and manufacturing tools and processes they deemed appropriate.
3. Each contestant had to submit with his stove a pro forma invoice for the purchase of 500 stoves.
4. The stoves were to be judged by three criteria: product quality, tested energy efficiency, and cost as shown on the pro forma invoice. The winners would be determined by overall performance in all three categories.
5. The three winners would each receive a small monetary prize and a purchase guarantee for from 150 to 500 stoves to

them to start up stove production at minimized financial risk. All entries would receive a cash consolation prize equivalent to the cost of the stove submitted as an entry.

The stove contest advertisement was coupled with the availability of a technical assistance programme for stove artisans. This technical assistance took the form of informal instruction provided by a Renewable Energy Research Institute production engineer and Maxwell Kinyanjui, a consultant in stove design and dissemination from the Kenya Renewable Energy Project. More than fifty producers were visited and shown how to fabricate the improved stove. All were encouraged to enter the contest.

Initially, all contestants were asked to fabricate the same stove model according to the same specifications. Later, with the aid of Kinyanjui, the controlled-draft version of the improved stove was introduced as a suitable candidate for entries.

The response of the manufacturers was rather slow at first, but towards the closing date (March 1, 1984) many entries were received for a total of 28.

Once received, these entries were subject to laboratory tests conducted by Institute and University staff. Water-boiling tests were carried out under laboratory conditions with slight modification designed to simulate Sudanese cooking practices. With the exception of eight poorly constructed units, all stoves showed statistically insignificant differences in heat transfer efficiencies. Product quality varied widely and so did the prices quoted. Three winners were selected: one representing the formal sector (factories and large workshops), one the semi-formal sector (small workshops in and around markets), and another the informal sector artisans who currently produce the traditional stove

(craftmen without shops who work under trees or in and around scrap metal supplies). The winners were:

1st prize:	Jamal Sharbaak (semi-formal sector)
2nd prize:	Darfur Company (formal sector)
3rd prize:	Ibrahim Obeng (informal sector)

The success of the contest and the anticipated start-up production process set the scene for active dissemination activities.

5. DISSEMINATION

The dissemination of the new stoves was the first major task for the newly formed Technology Development and Dissemination Unit of the Renewable Energy Research Institute. Activities focused on four primary areas:

- Development of a brochure illustrating proper use of the new stoves to be used as a marketing tool and as an information resource for stove users.
- Marketplace demonstrations of the new stoves which also afforded an opportunity for producers to sell directly to the public.
- Implementation of a media campaign to acquaint the public with the availability and proper use of the new stoves.
- Sponsorship of a training workshop for new and existing stove producers designed to improve quality control and production methods.

A two-color brochure (measuring 8" by 4½" with four folds) was designed and 1,000 copies were printed in the first press run. The brochure highlights the major features of the stove, and through photographs and accompanying text, illustrates proper use of both the open-draft and controlled-draft versions in a step-by-step fashion. A name for the stoves was needed to aid in consumer product identification, and the Dissemination Unit staff chose canun el duga, or "stove for small charcoal pieces." The brochures were distributed to retailers carrying the new stoves and to stove users directly.

Over a period of several months, six demonstrations were held, principally in local markets. At the demonstrations, a Dissemination Unit staff member would explain the features and proper use of the new stoves to the assembled crowd. The stove would be filled with charcoal, lit, and then a pot

quickly it could be brought to a boil. Producers were invited to bring stoves for sale.

At these demonstrations, interest was keen and sales were brisk. It was common for between fifty and eighty stoves to be sold in a two-hour period. All purchasers were provided with a copy of the brochure. The demonstrations served to familiarize a necessarily limited segment of the population with the availability and proper use of the new stove as well as to provide a marketing opportunity for the stove producers. In addition, nearby retailers who witnessed the demonstrations had an opportunity to make contact with the stove producers.

The media campaign involved radio, television, and print. Announcements of the introduction of the new stoves to the marketplace and their principal characteristics were presented on radio and television as well as in the local newspapers. News stories about the stoves also appeared in newspapers and journals. In addition, Dissemination Unit staff provided interviews for the electronic media which focused on the history of the stove design and the various activities undertaken to promote it. These interviews were integrated into regular programming.

Since demand for the new stoves exceeded supply and stove quality was not as consistent as was desired, a workshop was planned for producers. In November, 1984, a total of 24 artisans received five days of hands-on training in stove production methods. Tools, templates, and materials were provided to the trainees, who included existing and potential producers of the improved stoves from the Khartoum, Khartoum North, and Omdurman areas. A trainer's manual was developed which stressed quality control and optimal production methods. Also published were two trainee manuals (one for

each version of the stove) which illustrated the tools required, the dimensions of each piece, and the step-by-step assembly procedures. Jamal Sharbaak, first prize winner in the stove contest, served as the principal trainer. He was assisted by Institute staff. The training itself was held near where the metalworkers are located in order to garner attention from potential producers located nearby.

At the closing ceremony, to which local retailers were invited, participants were awarded a Certificate of Achievement and prizes were awarded for the three best stoves produced during the solo production phase of the training. An additional prize was awarded for an innovative design contribution. Members of the media were invited to report on the event to their respective audiences.

Future activities in this area will center around the following:

- Additional work with the media.
- Additional demonstrations.
- Production of a videotape highlighting proper use of tools and effective production methods.
- Replication of the workshop and demonstrations in other locations.

This last activity will be facilitated by the use of the Renewable Energy Development Grants which are available through SREP. Activities of this sort are already underway in El Obeid (in conjunction with CARE) and Kassala (in conjunction with the Eastern Region Forest Department). Other agencies will be contacted and encouraged to submit

a proposal to cover expenses associated with sponsorship of the workshop and subsequent demonstrations. Templates and manuals developed for the initial presentation will be available for duplication and further assistance will be provided in the form of technical assistance from SREP and Institute staff in the planning and implementation phases. Through this mechanism, the geographic area in which the improved stoves are available and in use will be enlarged.

In addition, efforts continue to elicit suggestions for improvements to the designs from both producers and users. A new design, modelled after the ceramic jiko developed in Kenya and characterized by a ceramic lining, will be introduced as part of the 1984-85 Annual Work Plan.

6. CONCLUSION

As part of the workshop planning and follow-up activities, several questionnaires were developed to obtain baseline and evolutionary statistics on stove production and sales figures. These questionnaires were administered through face-to-face interviews (in order to gain comments, suggestions, and sufficient background information) with stove producers, stove retailers, and workshop trainees. This information, coupled with previously obtained data on production and distribution, strongly suggests that the project's success is in large part attributable to the fact that efforts were directed towards traditional stove producers from the informal sector and existing distribution channels.

Other stove projects have rarely utilized this existing resource. As a result of relying on the existing infrastructure, this project not only has developed a successful design, but also a successful marketing and distribution network. This is evidenced by the fact that producers now sell directly to the retailers without any intervention by Institute and project staff. Current production/sales rates are more than 500 stoves per month, and these figures are increasing steadily. Excepting those purchased for use in the workshop, this project has never purchased materials or tools, nor has it been necessary to establish a stove production facility or to hire metalworkers to staff it. And excepting the stoves purchased in conjunction with the stove contest, it has not been necessary to buy stoves in order to encourage production.

RELATED PUBLICATIONS

Trainer's Manual for Canun El Duga

Trainee Manual for Open-Draft Canun El Duga (Arabic)

Trainee Manual for Controlled-Draft Canun El Duga (Arabic)

Final Report - Khartoum Stovemaker's Training Workshop for Canun El Duga

Available from: Sudan Renewable Energy Project
P.O. Box 4032
Cemetery Road and Street 59
Khartoum, Sudan