PN-AAX-916
51418

THE THEBE PUMP --

A HUMAN TRACTION PUMP FOR BOTSWANA

Prepared by:

Jack Shields and Richard McGowan
Associates in Rural Development, Inc.
72 Hungerford Terrace
Burlington, VT 05401
U. S. A.
Under AID contract number 633-0209-C-00-1024-00.

Date: August 31, 1985

TABLE OF CONTENTS

Section	Page
Acronyms	i
Preface	ii
I. Executive Summary	1
II. Introduction	3
III. Pump Description	5
A. History	6
1. Rebuilt Pump Number 1	6
2. Rebuilt Pump Number 2	7
3. RIIC Redesigned Pump	8
B. New Pump Design	9
IV. Results and Conclusions	11
A. Financial and Economic Analysis	12
B. Institutional/Infrastructure Analysis	18
C. Energy/Ecological Impacts	20
D. Suggestions for Further Design Improvements	21
E. Recommendations	21

Appendices: A -- Site Descriptions and Operational Histories

B -- Fabrication and Installation Costs for Pump Redesigned by RIIC

C -- RIIC Design Improvements

D -- Required Installation Tools

ACRONYMS

ACDO	Assistant Community Development Officer
AID	U.S. Agency for International Development
ARD	Associates in Rural Development, Inc.
BCW	Botswana Council of Women
BEDU	Botswana Enterprise Development Unit
BHC	Botswana Housing Corporation
BREAC	Botswana Renewable Energy Activities Committee
BRET	Botswana Renewable Energy Technology project
BRI	Brace Research Institute
BTC	Botswana Technology Centre
DDC	District Development Committee
DET	District Extension Team
DPS	Deputy Permanent Secretary
DWA	Department of Water Affairs
FAB	Forestry Association of Botswana
FWE	Family Welfare Educator
GOB	Government of Botswana
IDM	Institute of Development Management
MFDP	Ministry of Finance and Development Planning
MLGL	Ministry of Local Government and Lands
MMRWA	Ministry of Mineral Resources and Water Affairs
NDP-5	Fifth National Development Plan
NGO	nongovernmental organization
ODA	British Overseas Development Administration
PCV	Peace Corps volunteer
PfP	Partnership for Productivity
PEC	Project Executive Committee
PHU	percentage of heat utilized
PP	project paper
PV	photovoltaic
PVO	private voluntary organization
RECC	Rural Extension Coordinating Committee
RET	renewable energy technology
RHC	retained heat cooker
RIIC	Rural Industries Innovation Centre
RIO	Rural Industrial Officer
RWL	resting water level
S&CD	Social and Community Development Officers
SDA	Seventh Day Adventists
SIDA	Swedish International Development Agency
TESIE	technical, economic, sociocultural, institutional or energy (assessment model)
USDA	U.S. Department of Agriculture
VDC	Village Development Committee
VET	Village Extension Team
VHC	Village Health Committee
VTF	Village Training Facility
WMU	Water Maintenance Unit
WTGS	Windmill Technology Group Serowe
YWCA	Young Women's Christian Association

PREFACE

This report describes a portion of the work undertaken by Mr. Jack Shields and Mr. Richard W. McGowan at the Botswana Renewable Energy Technology (BRET) project from January to June, 1985. Mr. Shields is a renewable energy consultant for Associates in Rural Development, Inc. (ARD), and Mr. McGowan is the firm's senior engineer. ARD is the contractor implementing the BRET project for the U. S. Agency for International Development (AID) under contract number 633-0209-C-00-1024-00. The work discussed in this report was done primarily by Mr. Shields, Mr. Modise Motshoge (a BRET technician) and RIIC staff members--Mr. Paul Elkington, Mr. Fred Pelotona, Mr. Motlatlawe Motlatlawe and Mr. Kenneth Mathiba.

The BRET project conducted research on the human traction "Thebe" pump as part of its overall effort to address technical and economic issues pertaining to water pumping in Botswana's rural areas. Pump research and development, installation, monitoring and report writing were a joint effort of the government of Botswana's (GOB) Department of Water Affairs (DWA) in the Ministry of Mineral Resources and Water Affairs (MMRWA), Rural Industries Innovation Centre (RIIC) and BRET, a cooperative project between MMRWA and AID. Technical assistance for the pumping program was provided by ARD.

I. EXECUTIVE SUMMARY

As part of its overall comparative testing program of water pumps, which involved virtually all of the different types of pumping systems currently in use in Botswana, the BRET project undertook testing and development of several hand-operated, human traction ("Thebe") pumps. This development work was done in coordination with RIIC.

Human traction pumps are essentially standard reciprocating piston pumps which have been modified to use mechanical advantage to allow the pumping of water from considerably higher heads than would normally be possible. Conventional hand pumps, such as the India Mark II which was also tested as part of the project's pumping program (see TWO TYPES OF HAND PUMPS--RESULTS OF FIELD TESTS IN BOTSWANA, Jonathan Hodgkin and Richard McGowan, ARD, Burlington, Vermont, August 30, 1985), are limited in practice to a total pumping head of about 30 meters. Beyond that point, the force required to move the pump handle is too great for most users, as women and children are often primarily responsible for pumping water. This could severely limit the widespread use of hand-operated pumps in Botswana, where static water levels in boreholes are frequently in excess of 30 meters. The Thebe pump shows promise of being operable with reasonable ease against heads of up to 100 meters.

Three Thebe pumps were tested. The first two were rebuilt from nonfunctional pumps at separate locations. The third was a modified version of the first two, which was developed by the BRET project with the help of RIIC. This redesign effort had two goals:

- increase the efficiency, reliability and longevity of the machine, and
- make substitutions for any components which could not be locally manufactured with parts that could be made in Botswana.

Any widespread dissemination program for human traction pumps should be predicated on the development of an adequate infrastructural support network, including trained technicians for installation, maintenance and repair, as well as locally available supplies of spare parts. The project felt that manufacturing these units in Botswana would guarantee that the necessary skills and parts would be available when required.

Thus far, the BRET project's experience with Thebe pumps has been encouraging. Villagers use the pumps regularly, and RIIC has expressed a desire to continue the research and development effort. As part of the Ministry of Local Government and Lands'

(MLGL) efforts to provide water for human and livestock consumption, interest in hand-operated pumps is increasing.

While definite conclusions cannot be drawn at this point, due to the limited amount of data on only a few systems, human traction pumps appear to be cost-effective relative to all of the other alternative equipment options for low-flow (about five to 10 cubic meters per day) and medium- to high-head (30 to 100 meters) conditions. Because of this ability to pump modest amounts of water from moderately high heads, which are found in many areas of Botswana, use of the Thebe pump should be encouraged by MLGL,and its continued development by RIIC should be supported by the GOB. Since District Councils are in a better position to administer an installation and maintenance program for human traction (and other hand-operated) pumps, the responsibility for any dissemination effort should lie with them, rather than DWA.

II. INTRODUCTION

In the developing world, installation of small-scale rural water systems is often constrained by a lack of sufficient capital to purchase pumps. Diesel systems are the standard type of equipment used to pump water at remote sites (i.e., off-grid). However, even if there are funds to buy equipment, diesel pumps are typically available only in models that are oversized for relatively low-demand situations, such as those requiring less than 10 cubic meters per day of water at pumping heads (elevation plus frictional losses in the pipes) of less than 100 meters. Renewable energy technology (RET) pumps (e.g., wind or photovoltaic units) usually have very high capital equipment costs. Although long-term recurrent cost savings can be realized by using these RET pumps under certain circumstances, lack of access to capital frequently prohibits individuals or small cooperatives from taking advantage of such savings. Thus, a gap exists in pumping technologies available for low-cost, low-demand labor-intensive water supply systems (as opposed to those requiring a greater capital investment).

For several years, the BRET project (an AID-funded project operating under MMRWA) has been involved in a comprehensive comparative testing program of a wide variety of water pumping technologies. One of the pumps tested as part of this program was a human traction pump, called the "Thebe" pump for one of its developers. It is capable of delivering eight to 10 cubic meters of water per day from relatively high heads, up to 100 meters. In many areas of Botswana, borehole water levels are well in excess of 30 meters, which is the practical limit for the standard reciprocating-piston hand pumps examined in the BRET comparative testing program (TWO TYPES OF HAND PUMPS--RESULTS OF FIELD TESTS IN BOTSWANA, Jonathan Hodgkin and Richard McGowan, ARD, Burlington, Vermont, August 30, 1985). Thus, there are many possible applications for human traction pumps in areas where boreholes are relatively deep, the demand for water is low, and diesel, solar or wind pumps are not desirable, for whatever reason.

Human traction pumps were first used in Botswana in 1947, and some continued to operate until 1981. After discussions between the BRET project and RIIC, it was decided that a redesign of the Thebe pump would be worthwhile, since its simplicity, low maintenance requirements, general robustness and water pumping capacity made it a promising alternative for low-cost, low-demand, remote-site water pumping. The project decided to fund a testing and development program for the pump to study its acceptability and application in Botswana villages, reestablish the interest of council Water Maintenance Units (WMUs) in the device and attempt to improve the traditional design. During the program, two "old" pumps were refurbished and reinstalled in

boreholes at Monwane and Lentsweletau. This report provides some history on the use of human traction pumps, recent developments in the technology, a technical description, financial and economic analyses, suggestions for further improvements in the pump's design and recommendations for future potential applications.

III. PUMP DESCRIPTION

The BRET project and RIIC jointly produced a prototype of a new human traction pump. This pump differs from a standard hand pump in that the stronger leg muscles drive it, rather than the arm and upper body muscles used with an ordinary hand pump. As shown in Figure 1 below, the human traction pump is operated by a person walking around the capstan assembly, pushing against a bar rotating around the central pivot. This pivoting capstan assembly is connected to a vertical shaft with a crank attached to the lower end. As the crank is turned by the person pushing the bar around the central pivot, the rotary action of the bar is converted to a horizontal reciprocating (back-and-forth) motion in the tie rod. The tie rod is attached to the bottom of a triangular rocker assembly. The tie rod moves the rocker assembly in such a way that the upper arm makes the sucker rod of a standard reciprocating-piston pump go up and down, driving the pump's cylinder in the borehole. While this may seem conceptually confusing, it is a relatively simple piece of equipment that can be almost entirely manufactured locally.

Figure 1. The Thebe Pump

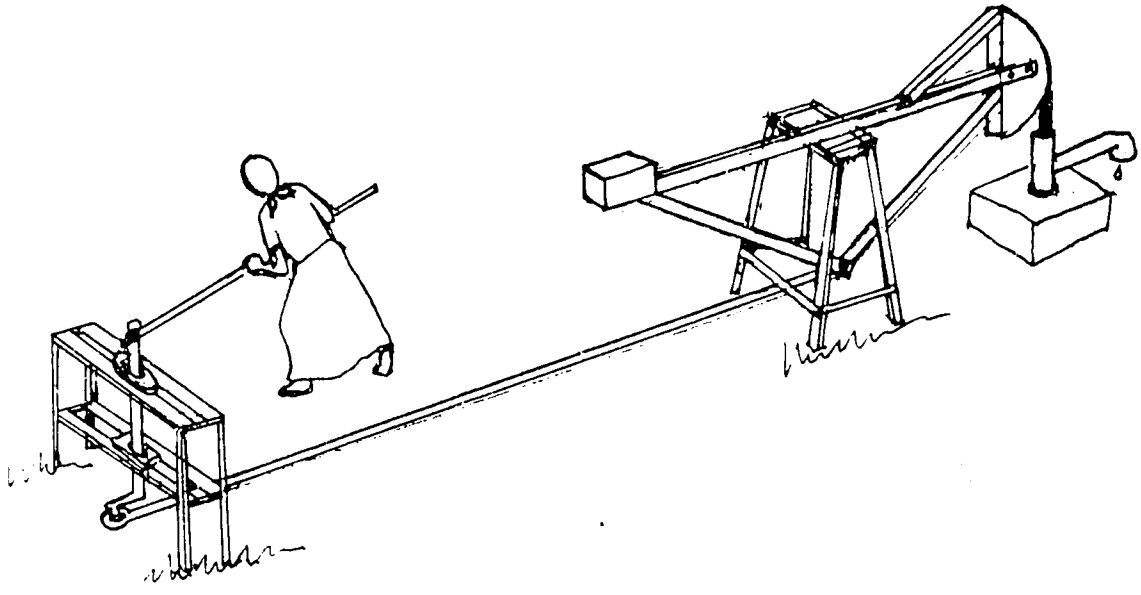

A. History

References to the use of human traction pumps in Botswana appear in annual reports of the European Advisory Council of the Bechuanaland Protectorate for 1947 to 1965, but no specific information, such as tenders, repair records, locations, etc., could be found. Most repairs and perhaps even fabrication were done at the Department of Public Works' mechanical shops. From these sources, it seems that at least 30 human traction pumps were installed in tribal and government boreholes, mainly to provide drinking water for people and cattle.

In 1981, BRET technicians came across the remains of a human traction pump at Thota ya Marula in the Kweneng District. During conversations with syndicate members, they mentioned that the pump had been in continuous operation at that site since 1954. The members expressed considerable satisfaction with the pump and had planned to reinstall it after a scheduled borehole cleaning. Although the pump showed obvious signs of wear, only the below-ground components, such as the cylinder, drop pipe and sucker rod, appeared to need replacement, which is a routine procedure for any piston pump, including hand pumps and windmills.

Further investigation at various council WMUs revealed that there had been many human traction pumps in various states of repair at several sites which had since been equipped with diesel pump sets. Some District Councils expressed an interest in refurbishing these human traction pumps for installation in lands areas, at cattle posts and as back-up water pumps for villages with reticulation (distribution) systems that had extra, unused, low-yield boreholes. Subsequently, the BRET project and DWA windmill installation crew removed two human traction pumps and transported them to RIIC in Kanye for refurbishing.

1. Rebuilt Pump Number 1

The first pump was rebuilt by Mr. Motshoge and Mr. Shields. This process required 160 person-hours and P268.00,* not including the below-ground components. (Details on this repair work are given in Appendix A.) The pump was installed in the village of Monwane on October 24, 1983, to replace a Mark II India hand pump. Villagers had complained that it was difficult to operate and more than one person was required to pump water. Installation of the Thebe pump was completed in four days by the DWA windmill crew. The water level at rest was 45 meters, and a 2.75-inch cylinder was placed at 66 meters due to severe draw-down conditions in the borehole. After installation, the

---

*All costs in this report are given in terms of Botswana pula, where US$0.57 = one pula (P1) = 100 thebe.

borehole was frequently pumped dry, which shows that this pump can operate at a moderately high head for a hand-operated pump. The yield at that time was 1.8 liters per stroke (approximately 77 percent cylinder efficiency). To date, this pump has required no further repairs, except for the replacement of cup leathers in February, 1985. However, a new cylinder should be fitted, as the previous one was in a used and worn condition when installed. The people of Monwane told the BRET crew that they were extremely pleased with the pump and used it nearly all day long. The human traction pump proved particularly useful since their other borehole was equipped with a diesel pump that was often inoperable and in need of repair.

2. Rebuilt Pump Number 2

The second pump was refurbished by the RIIC ME-2 workshop. Unfortunately, the workshop drawings made during rebuilding of the first pump were somewhat inaccurate, and no BRET technicians were available for consultation with RIIC staff until the second refurbishing was nearly complete. As a result, there were some serious problems with the mechanical specifications of the second rebuilt pump, which caused equipment malfunction when the pump was reinstalled. The BRET project was billed for a total of 512 person-hours at a cost of P2,560.00 to rebuild the second pump. This did not represent the actual cost of refurbishing the pump under normal conditions, but rather reflected the cost of several iterations in parts manufacture due to the lack of precise drawings. Further information on these repairs is given in Appendix A.

The second rebuilt pump was installed in Lentsweletau in the Kweneng District on December 15, 1983. A 3.25-inch cylinder was placed at 18 meters, and the rest water level was nine meters. In February, 1984, excessive wear around the crankshaft and crankshaft bearing pin was discovered due to poor fitting of the pin and incorrect field installation. The crankshaft was returned to RIIC and repaired. During the repairs, villagers continued to use the pump by hanging from the counterbalance end of the rocker assembly to operate the cylinder. Also during this time, the cylinder froze because of small stones dropped into the drop pipe by children. The well seal was redesigned to eliminate this problem. The crankshaft was reinstalled in August, 1984, but failed within one month. BRET technicians and the DWA windmill crew removed the crankshaft assembly and repaired it in Gaborone, using parts scavenged from other pumps. The crankshaft was again reinstalled on March 1, 1985 and has operated well since then. The yield per stroke is 4.3 liters (88 percent cylinder efficiency).

The people of Lentsweletau said that they greatly appreciated the pump, and it frequently received heavy use,

especially when the boreholes equipped with diesel pumps were not operating. In the past, people had not used the pump correctly--instead of walking completely around the capstan to stroke the pump, they stood to one side and pushed the handle back and forth. This type of action will not affect the redesigned pump, but it was directly responsible for the crankshaft problems described here.

3. RIIC Redesigned Pump

In 1984, the BRET project and RIIC decided to redesign the human traction pump to improve its long-term durability, particularly of the parts that showed the most wear on the old pumps, and reduce the materials costs as much as possible. One improvement which was incorporated in the new design was the use of a chain with a guide to connect the sucker rod to the rocker arm assembly--this centered the pump rod in the drop pipe, thereby considerably reducing wear on the down-hole pump components.

It was also proposed that all of the cast parts be eliminated, so that the pump could be entirely manufactured in Botswana, with the exception of the cylinder, bearings and chain. After some delay in assigning an RIIC design officer to the task (who was involved in a severe automobile accident shortly after his arrival), detailed discussions began. Mr. Elkington, a volunteer from Great Britain's International Volunteer Service, made the preliminary drawings for the BRET project, and fabrication of the pump began after the drawings were approved.

Technical performance specifications for the new design were as follows:

- the pump must operate a single-action, 24-inch stroke, reciprocating cylinder;
- it must pump a cylinder with a two inch-diameter from a depth of 100 meters and larger cylinders for shallower boreholes;
- the pump must be operable by one person, and children and older people should be able to use it as well;
- it must have a design life of 10 years, assuming it pumps four cycles per minute, eight hours a day, year-round; and
- the pump's above-ground assembly should be essentially maintenance-free for its entire 10-year life--no components should require replacement,

except as a result of gross damage and periodic cylinder or leathers replacement, or the occasional replacement of drop pipes and sucker rods due to normal corrosion.

B. New Pump Design

The new human traction Thebe pump consisted of four major assemblies:

- rocker assembly and stand,
- capstan assembly, crank and capstan stand,
- tie rod, and
- below-ground components--pipes, rods and cylinder.

These assemblies are shown in the drawing in Figure 2. It should be noted that this is not an engineering drawing, but does give representative dimensions and the approximate design for each of the pump's components.

Half of the weight of the water column and all the rods' weight are counterbalanced by weights mounted on the rocker assembly. This design feature significantly reduces the effort required to operate the pump, and permits its use with considerably higher heads than standard hand pumps. Detailed specifications on machine loads, bearing specifications, materials selection, etc. can be obtained from the RIIC design office in Kanye.

It took 75.5 person-hours to fabricate the pump, which was completed in March, 1985. The cost of materials was P498, and the total cost including labor was P1,162. It took the DWA windmill crew another four days to install the pump at Dikgonnye in the Kgatleng District on June 28, 1985. The 2.25-inch-diameter cylinder with a 24-inch stroke was placed at 60 meters, with the resting water level at 37 meters. The measured yield was 1.4 liters per stroke (90 percent cylinder efficiency), and a pushing force equivalent to 11.5 kilograms applied to the end of the rotating bar was required to operate the pump.

A 4.5-inch cylinder was then temporarily installed to test the pump's ability to withstand overloading. Although it was difficult to operate, the machine did not fail. Thus, it is anticipated that this pump will operate without the difficulties encountered with the earlier design. This site will be visited periodically by the Kgatleng District Council WMU for inspection and repairs, if necessary.

Figure 2. Major Component Assemblies of the Thebe Pump

(Drawings not to scale)

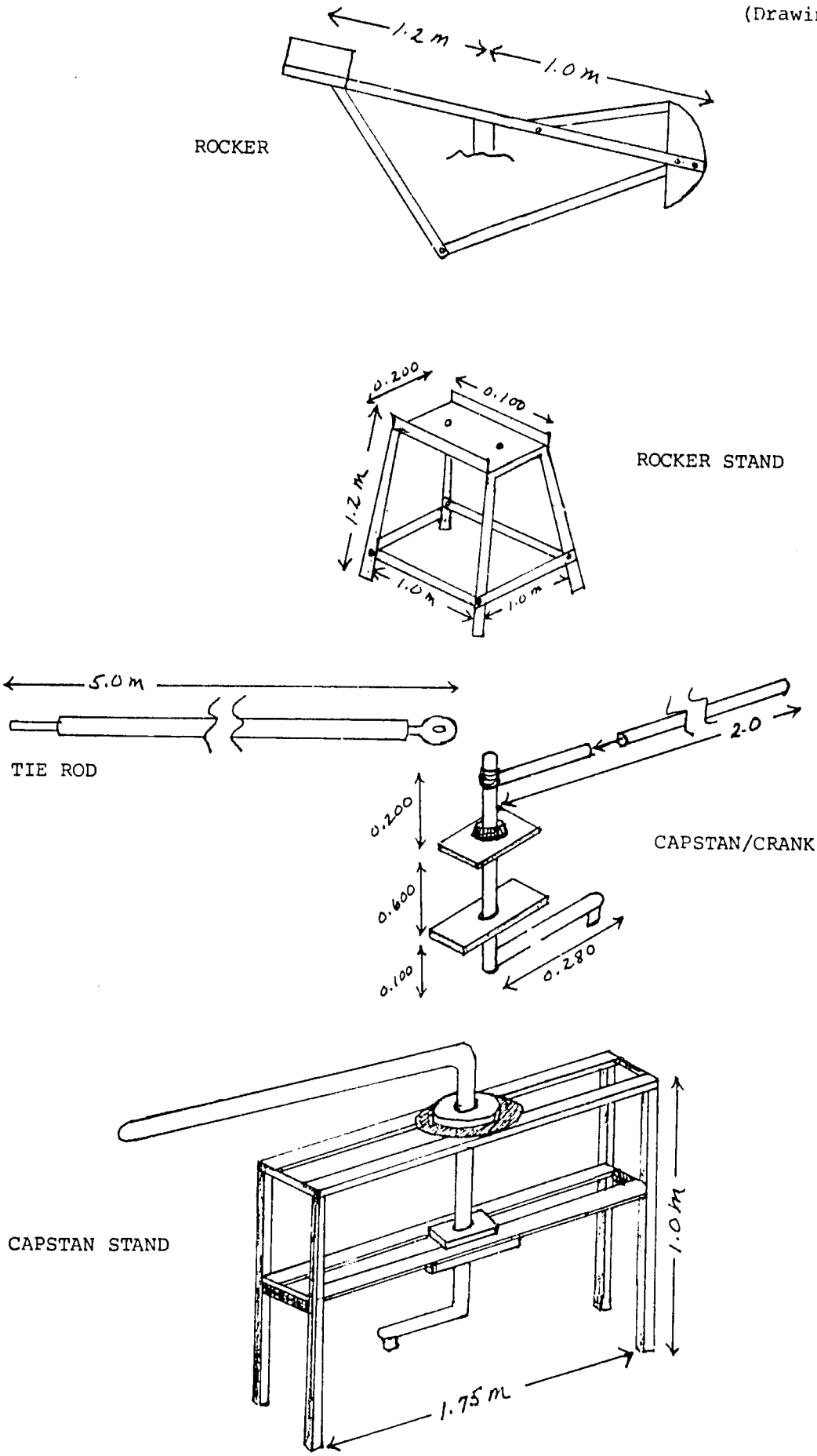

IV. RESULTS AND CONCLUSIONS

Thus far, all of the Thebe pump installations at village sites have been well received by users. With the exception of the problems with the crank assembly at Lentsweletau, the mechanical performance of human traction pumps has been very promising, particularly given the history of the pumps prior to the BRET project. RIIC has expressed an interest in continuing to develop the pump, since they consider it an appropriate technology whose initial fabrication by RIIC could later be transferred to local, private-sector mechanical and engineering contractors. Such activity would directly contribute to one of RIIC's stated objectives as a development agency in Botswana. RIIC also feels that the pump fills a niche in the array of pumping technologies, that range from standard hand pumps (for example, the India Mark II) to more capital-intensive systems, such as animal traction, windmill, biogas and photovoltaic pumps.

The MLGL water engineer and District Councils have also expressed interest in the Thebe pump. Many of the councils' boreholes have low yields (less than 0.5 cubic meters per hour) or are located in remote regions where the demand for water is not particularly high (under 10 cubic meters per day). Unused boreholes in villages with reticulated water supplies, lands areas, small villages and even Remote Area Dwellers' settlements could be equipped with stand-alone pumping systems, either hand or human traction pumps. Recently, MLGL circulated a memo to the District Councils asking them to provide a list of suitable sites for the installation of hand-operated pumps--they received over 50 requests for this kind of equipment.

The Thebe pump's versatility, in terms of its ability to pump from greater depths and capacity to supply more water from shallow boreholes than standard hand pumps, makes it an ideal adjunct to the efforts of District Councils to provide more water to a greater number of areas of Botswana. The councils also recognize that these pumps are completely serviceable by council WMUs. Furthermore, since this technology is already familiar to the maintenance units, extensive and costly retraining and associated infrastructural support would not be required.

The District Councils have also expressed an interest in local fabrication of Thebe pumps by technicians from WMUs. No special tooling is needed to manufacture the pumps, only tools such as welders and cutting equipment, which are normally already available to most maintenance units. RIIC's technical drawings are sufficiently detailed to permit fabrication of the Thebe pump by most local manufacturers.

A. Financial and Economic Analysis

As mentioned previously, because of inherent limits on head and flow rates for human traction pumps, the most reasonable comparison in financial/economic terms is to standard hand pumps. Thus, the cost analysis here includes data for conventional hand pumps so that this type of comparison can be made. A separate BRET project report, TWO TYPES OF HAND PUMPS--RESULTS OF FIELD TESTS IN BOTSWANA (Jonathan Hodgkin and Richard McGowan, ARD, Burlington, Vermont, August 30, 1985), discusses the economics of hand pumps in detail. This section draws heavily on information from that report.

Both technically and economically, hand-operated pumps are best compared on the basis of their water output for a given head. Hence, the primary criterion used in economic and financial comparisons is the cost (in Pula) of the water pumped per unit of volume (cubic meters) per unit of head (meters), abbreviated as P/m3*m. The cost per unit volume (m3) of water is also shown. The spread-sheets (Tables 1, "Financial Analysis of Hand Pumping Systems," and 2, "Economic Analysis of Hand Pumping Systems") presented on the following two pages list the components of a conventional life-cycle cost analysis. The tables show the relative costs of the Dikgonye Thebe pump compared to three standard hand pump installations at Tlhareseleele, Hukuntsi and Sengwoma, for average water outputs of one and three cubic meters per day.

The labor charges have been broken out for convenience in shadow-pricing both labor and imported materials. The economic analysis differs from the financial only in that the former shadow-prices local labor using a 0.5 multiplier, and imported materials and components with a 1.1 multiplier. As was true for all of the financial/economic analyses performed during the BRET project's comparative pump testing program, costs that are common to all of the systems (such as borehole drilling charges) were not included in the cost comparisons.

Costs were separated into two categories--capital and recurrent. The two spread-sheets (Tables 3, "Summary of Recurrent Financial Costs for Each System by Year," and 4, "Summary of Recurrent Economic Costs for Each System by Year") following Tables 1 and 2 give the recurrent costs for each hand-operated pumping system on an annual basis. The rows in these spread-sheets are as follows:

- ARC (M)--annual recurrent cost of materials used for routine operation and maintenance, and transportation charges since the shadow-pricing of labor does not affect transportation costs;

Table 1

FINANCIAL ANALYSIS OF HAND PUMPING SYSTEMS

Site Location	TLHARESELEELE		HUKUNTSI		DIKGONYE THEBE		SENGWOMA	
Avg.Water Output (m3/dy)	1	3	1	3	1	3	1	3
Total Pumping Head (m)	14	14	17	17	33	33	16	16
Amortizatn. Period (yrs)	20	20	20	20	20	20	20	20
Pump life	10	10	10	10	10	10	10	10
Discount Rate (%)	6%	6%	6%	6%	6%	6%	6%	6%
COSTS								
Initial Capital Cost	605	605	538	538	2123	2123	539	539
Installation Cost	176	176	861	861	327	327	274	274
Installation Cost-labor	560	560	980	980	840	840	540	540
Total Installed Cost	1341	1341	2379	2379	3290	3290	1353	1353
PW of Recurrent Costs	2874	2874	1633	1633	3369	3369	1712	1712
Life Cycle Cost (LCC)	4215	4215	4012	4012	6659	6659	3065	3065
BENEFITS	Cubic Meter Water Value Assumed				0.3 Pula			
Ann. Flow	365	1095	365	1095	365	1095	365	1095
Disc. Ann. flow	209	628	209	628	4187	12560	4187	12560
Ann. Head*Flow (m4/year)	5,110	15,330	6,205	18,615	12,045	36,135	5,840	17,520
Value of Output @P.30/m3	110	329	110	329	110	329	110	329
PW of Benefit Stream	1256	3768	1256	3768	1256	3768	1256	3768
Benefit/Cost Ratio	0.30	0.89	0.31	0.94	0.19	0.57	0.41	1.23
Annualized Cost (P/m3) (Water Discounted)	1.755	0.585	1.671	0.557	0.139	0.046	0.064	0.021
Annualized Cost (P/m3) (Water Not Discounted)	1.007	0.336	0.958	0.319	1.591	0.530	0.732	0.244
Annualized Cost (P/m4)	0.072	0.024	0.056	0.019	0.048	0.016	0.046	0.015

m4 = Volume delivered X Head

Table 2

ECONOMIC ANALYSIS OF HAND PUMPING SYSTEMS

Site Location	TLHARESELEELE		HUKUNTSI		DIKGOMYE THEBE		SENGWOMA	
Avg.Water Output (m3/dy)	1	3	1	3	1	3	1	3
Total Pumping Head (m)	14	14	17	17	33	33	16	16
Amortizatn. Period (yrs)	20	20	20	20	20	20	20	20
Pump life	10	10	10	10	10	10	10	10
Discount Rate (%)	6%	6%	6%	6%	6%	6%	6%	6%
COSTS								
Initial Capital Cost	666	666	592	592	1085	1085	593	593
Installation Cost	176	176	861	861	327	327	274	274
Installation Cost-labor	280	280	490	490	1010	1010	270	270
Total Installed Cost	1122	1122	1943	1943	3222	3222	1137	1137
PW of Recurrent Costs	2243	2243	1327	1327	2788	2788	1360	1360
Life Cycle Cost (LCC)	3365	3365	3270	3270	6010	6010	2497	2497
BENEFITS	Cubic Meter Water Value Assumed				0.3 Pula			
Ann. Flow	365	1095	365	1095	365	1095	365	1095
Disc. Ann. flow	209	628	209	628	4187	12560	4187	12560
Ann. Head*Flow (m4/year)	5,110	15,330	6,205	18,615	12,045	36,135	5,840	17,520
Value of Output @P.30/m3	110	329	110	329	110	329	110	329
PW of Benefit Stream	1256	3768	1256	3768	1256	3768	1256	3768
Benefit/Cost Ratio	0.37	1.12	0.38	1.15	0.21	0.63	0.50	1.51
Annualized Cost (P/m3) (Water Discounted)	1.401	0.467	1.362	0.454	0.125	0.042	0.052	0.017
Annualized Cost (P/m3) (Water Not Discounted)	0.804	0.268	0.781	0.260	1.436	0.479	0.596	0.199
Annualized Cost (P/m4)	0.057	0.019	0.046	0.015	0.044	0.015	0.037	0.012

m4 = Volume delivered X Head

Table 3

SUMMARY OF RECURRENT FINANCIAL COSTS FOR EACH SYSTEM BY YEAR

Infl.Rate 0.00%

Year	1	2	3	4	5	6	7	8	9	10	11	12	13	14	15	16	17	18	19	20
Site:TLHARESELEELE																				
ARC (M)	0	60	60	60	60	60	60	60	60	0	60	60	60	60	60	60	60	60	60	60
ARC (L)	0	140	140	140	140	140	140	140	140	0	140	140	140	140	140	140	140	140	140	140
NARC (M)*	0	0	0	0	281	0	0	0	0	750	0	0	0	0	281	0	0	0	0	0
NARC (L)	0	0	0	0	0	0	0	0	0	240	0									
Total RC	0	200	200	200	481	200	200	200	200	990	200	200	200	200	481	200	200	200	200	200
Site: MUKUNTSI																				
ARC (M)	0	10	10	10	10	10	10	10	10	0	10	10	10	10	10	10	10	10	10	10
ARC (L)	0	65	65	65	65	65	65	65	65	0	65	65	65	65	65	65	65	65	65	65
NARC (M)*	0	0	0	0	281	0	0	0	0	759	0	0	0	0	281	0	0	0	0	0
NARC (L)	0	0	0	0	0	0	0	0	0	240	0	0	0	0	0	0	0	0	0	0
Total RC	0	75	75	75	356	75	75	75	75	999	75	75	75	75	356	75	75	75	75	75
Site: DIKGOMYE																				
ARC (M)	0	20	20	20	20	20	20	20	20	0	20	20	20	20	20	20	20	20	20	20
ARC (L)	0	140	140	140	140	140	140	140	140	0	140	140	140	140	140	140	140	140	140	140
NARC(M)**	0	0	0	0	310	0	0	0	0	2291	0	0	0	0	310	0	0	0	0	0
NARC (L)	0	0	0	0	0	0	0	0	0	240	0	0	0	0	0	0	0	0	0	0
Total RC	0	160	160	160	470	160	160	160	160	2531	160	160	160	160	470	160	160	160	160	160
Site: SEMGWOMA																				
ARC (M)	0	10	10	10	10	10	10	10	10	0	10	10	10	10	10	10	10	10	10	10
ARC (L)	0	74	74	74	74	74	74	74	74	0	74	74	74	74	74	74	74	74	74	74
NARC (M)*	0	0	0	0	281	0	0	0	0	740	0	0	0	0	281	0	0	0	0	0
NARC (L)	0	0	0	0	0	0	0	0	0	240	0	0	0	0	0	0	0	0	0	0
Total Rec	0	84	84	84	365	84	84	84	84	980	84	84	84	84	365	84	84	84	84	84

*(P281 for pump in year 5, 10, 15)

**(P310 for pump in year 5, 10, 15)

Table 4

SUMMARY OF RECURRENT ECONOMIC COSTS FOR EACH SYSTEM BY YEAR

Infl.Rate 0.00%

Year	1	2	3	4	5	6	7	8	9	10	11	12	13	14	15	16	17	18	19	20
Site-TLHARESELEELE																				
ARC (M)	0	66	66	66	66	66	66	66	66	0	66	66	66	66	66	66	66	66	66	66
ARC (L)	0	70	70	70	70	70	70	70	70	0	70	70	70	70	70	70	70	70	70	70
MARC (M)	0	0	0	0	309	0	0	0	0	825	0	0	0	0	309	0	0	0	0	0
MARC (L)	0	0	0	0	0	0	0	0	0	120	0	0	0	0	0	0	0	0	0	0
Total Rec	0	136	136	136	445	136	136	136	136	945	136	136	136	136	445	136	136	136	136	136
Site: HUKUNTSI																				
ARC (M)	0	11	11	11	11	11	11	11	11	0	11	11	11	11	11	11	11	11	11	11
ARC (L)	0	33	33	33	33	33	33	33	33	0	33	33	33	33	33	33	33	33	33	33
MARC (M)	0	0	0	0	309	0	0	0	0	835	0	0	0	0	309	0	0	0	0	0
MARC (L)	0	0	0	0	0	0	0	0	0	120	0	0	0	0	0	0	0	0	0	0
Total Rec	0	44	44	44	353	44	44	44	44	955	44	44	44	44	353	44	44	44	44	44
Site: DIKGOMYE																				
ARC (M)	0	22	22	22	22	22	22	22	22	0	22	22	22	22	22	22	22	22	22	22
ARC (L)	0	70	70	70	70	70	70	70	70	0	70	70	70	70	70	70	70	70	70	70
MARC (M)	0	0	0	0	341	0	0	0	0	2520	0	0	0	0	341	0	0	0	0	0
MARC (L)	0	0	0	0	0	0	0	0	0	120	0	0	0	0	0	0	0	0	0	0
Total Rec	0	92	92	92	433	92	92	92	92	2640	92	92	92	92	433	92	92	92	92	92
Site: SEMGWOMA																				
ARC (M)	0	11	11	11	11	11	11	11	11	0	11	11	11	11	11	11	11	11	11	11
ARC (L)	0	37	37	37	37	37	37	37	37	0	37	37	37	37	37	37	37	37	37	37
MARC (M)	0	0	0	0	309	0	0	0	0	814	0	0	0	0	309	0	0	0	0	0
MARC (L)	0	0	0	0	0	0	0	0	0	120	0	0	0	0	0	0	0	0	0	0
Total Rec	0	48	48	48	357	48	48	48	48	934	48	48	48	48	357	48	48	48	48	48

- ARC (L)--annual recurrent labor costs for operation and maintenance;

- NARC (M)--non-annual recurrent costs for expected maintenance and repair procedures, such as cylinder replacement on a five-year basis and the replacement of down-hole piping every 10 years;

- NARC (L)--non-annual recurrent labor charges; and

- total RC--total recurrent costs for each year, the sum of the figures in the first four rows.

The discounted present worth (PW) of the series of annual recurrent costs for each system was then calculated and is shown in the row labeled "PW of Recurrent Costs" in Tables 1 and 2.

Appendix B gives a detailed description of these costs for the Thebe pump. The principal differences in the recurrent costs for each system depend on the distance that pump maintenance crews have to travel. For the hand pumps, the materials costs are essentially identical, except for the number of lengths of pipe that must be replaced at the various sites due to the different heads. Because its construction is more complex, the Thebe pump costs more to replace after its assumed 10-year life.

The water output figures in the spread-sheets are based partially on actual tests conducted by BRET staff, and partly on discussions with users and field practitioners. None of the BRET hand-operated pumps were used at maximum capacity (i.e., they were not used continuously during the day on a regular basis). While the volume of water pumped per stroke was measured and the average amount of water pumped over short periods of time was calculated, the pumps very seldom receive this level of use. Thus, water output figures of one and three cubic meters per day were used in the analyses here as average figures to bracket the actual output at any given site. If used continuously, the pumps should be capable of delivering about five to six cubic meters of water per day.

An important assumption was made in these calculations with the agreement of MMRWA economists--<u>there is no labor charge for actually pumping the water</u>, since this is normally done by the users themselves. Any variation in the assumptions for this analysis would not appreciably change the relative ranking of these systems, since they are all basically the same kind of pump. However, a sensitivity analysis of these assumptions appears only in the project's comprehensive water pumping report (FIELD TESTS OF SMALL-SCALE WATER PUMPING SYSTEMS IN BOTSWANA, Richard McGowan and Jonathan Hodgkin, ARD, Burlington, Vermont, October 25, 1985), in which the assumptions are modified

simultaneously for all of the pumps tested in the BRET comparative program.

From the graphic presentation of the economic analysis in Figure 3, it can be seen that there are only small differences in the costs for the various sites, most of which are due simply to the varying travel distances for the pump maintenance crews. However, it should be remembered that the Thebe pump delivers water from a considerably greater depth than the hand pumps included for comparison. Although in this case, the depth for the Thebe pump was only 33 meters, this approaches the practical limit for use of a hand pump (at least with the India Mark II and Petro pumps tested by the BRET project--planned tests of the Monolift hand pump may alter this limitation). Theoretically, Thebe pumps are capable of pumping from much greater depths (up to 100 meters) than conventional hand pumps could reasonably be expected to deliver water. If a proper site can be found (high-head, low-demand), the redesigned Thebe pump should be reinstalled for high-head tests to determine its practical limits.

B. Institutional/Infrastructure Analysis

Since the institutional/infrastructure considerations and energy/ecological impacts pertaining to the use of hand-operated pumps apply to both conventional hand and Thebe pumps, portions of this section and the next also appear in the BRET project's hand pump report (TWO TYPES OF HAND PUMPS--RESULTS OF FIELD TESTS IN BOTSWANA, Jonathan Hodgkin and Richard McGowan, ARD, Burlington, Vermont, August 30, 1985).

For the testing phase of the BRET comparative program, DWA (which is responsible for the installation of pumping systems in Botswana) performed all of the hand-operated pump installations and repairs. The crew assigned to do this work had no technical difficulty with the required tasks. Thus, there is little doubt that with some training, others could learn to install and maintain hand-operated pumps. District council WMUs around the country are responsible for most of the repair and maintenance work on diesel pumping systems installed by DWA--they could certainly learn to install and maintain hand-operated pumps as well.

One of the major difficulties with the BRET project's comparative pump testing program was timely responses to pump failures. This problem is not unique to Botswana, and occurs in many hand-operated pump programs. It has two parts--communications and response time. The first difficulty was in getting word to the repair crew in Gaborone that a problem existed. As already noted, in some cases, users were unsure of who was responsible for the pump. Since District Councils handle

Figure 3

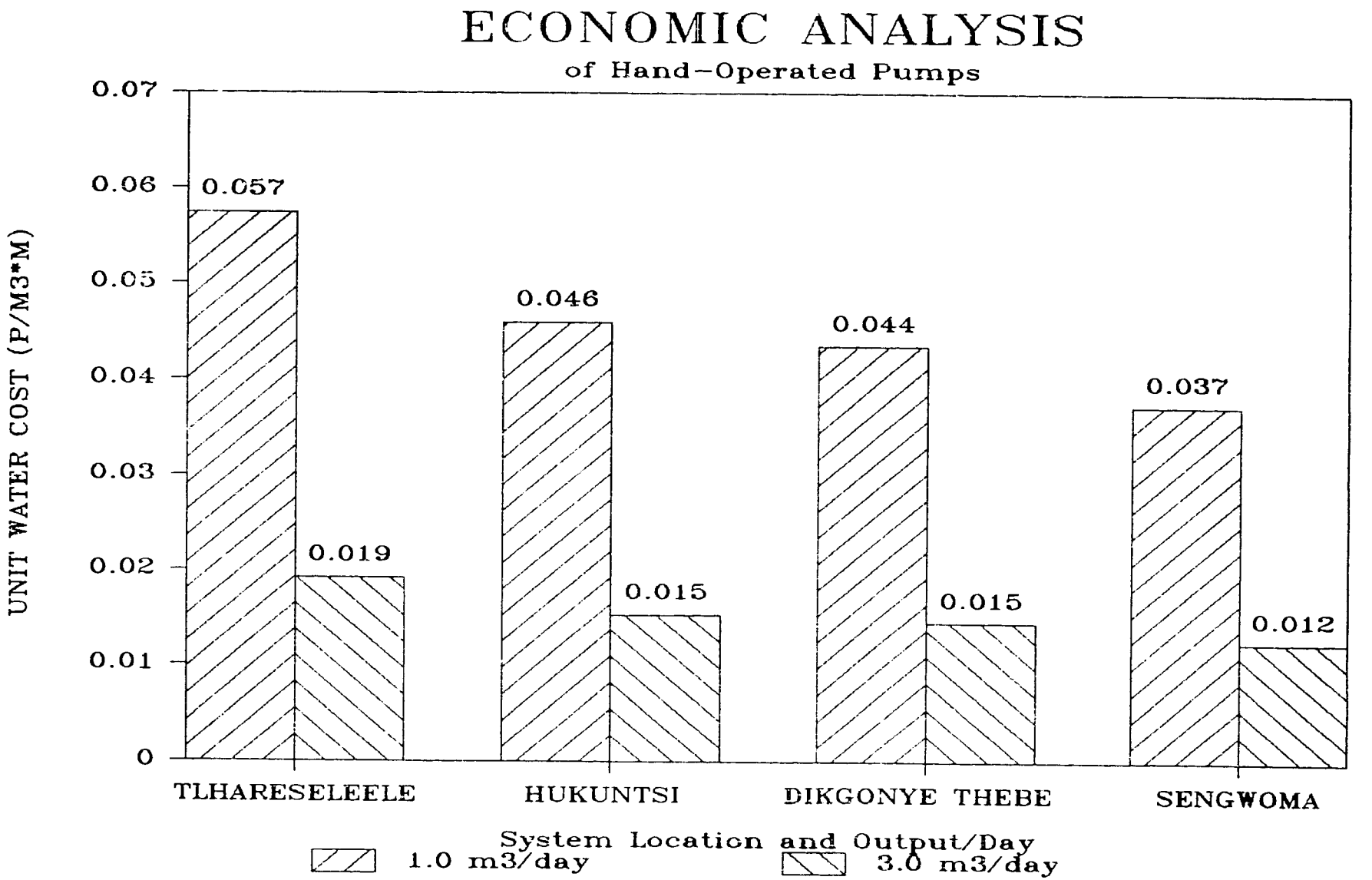
ECONOMIC ANALYSIS
of Hand-Operated Pumps
UNIT WATER COST (P/M3*M)
0.07
0.06
0.05
0.04
0.03
0.02
0.01
0
0.057
0.019
0.046
0.015
0.044
0.015
0.037
0.012
TLHARESELEELE
HUKUNTSI
DIKGONYE THEBE
SENGWOMA
System Location and Output/Day
1.0 m3/day
3.0 m3/day

the maintenance of diesel pumps, this was often the first place users tried. The water unit technician would then contact DWA or the MLGL water engineer, who would, in turn, contact the DWA hand-operated pump unit. This process often took several weeks to over a month. On many occasions, the site visit of an interested party (for example, when BRET technicians were conducting short-term performance tests) revealed a problem that had been reported, although the information had not yet reached the DWA crew.

Once the problem was reported to the responsible person, it often took a long time for the DWA crew to respond. This was due to the other assignments of this particular crew, which included assisting with the installation and maintenance of other types of pumps as well. Unfortunately, the crew's emphasis was often on the installation of new pumps, rather than repairing previously installed equipment.

It appears that a more responsive infrastructure for the hand-operated pump program could be created by reducing the complexity of the communications network, and placing the responsibility for pump maintenance and repair with a party that can respond to users' needs more quickly. These criteria could be met by the district council WMUs, who are directly accountable to the Council Secretary and people who live in the district. This arrangement would also reduce operation and maintenance costs by limiting the distance traveled to pump sites and the subsequent transportation costs of operation and maintenance crews.

C. Energy/Ecological Impacts

One of the major goals of hand-operated pump programs around the world is to provide clean water for drinking and cooking. This appeared to be clearly understood at the institutional level in Botswana. In fact, DWA reticulation schemes go to great lengths and expense to locate unpolluted water supplies outside village limits, where they are unlikely to become polluted. Thus, it is worth noting that only one respondent to the user survey cited cleanliness of the water as a positive benefit of the hand pump at that site.

In many areas where hand-operated pumps appear to be a reasonable technical option, a winch is used to raise buckets of water from hand-dug wells to water the livestock. Many of these wells are almost certainly polluted, and there is no doubt that people also drink from these water sources, as well as from polluted rivers and dams, as indicated by responses to the user survey. The issue of cleanliness, as well as closeness of the water point, needs to be emphasized with users. The 1985 Water

Hygiene Campaign is certainly an important step in this direction.

The use of hand-operated pumps in appropriate situations is not likely to have a significant impact on Botswana's use of imported fuels, although the use of human traction, instead of diesel, pumps to deliver water is certainly a small step in this direction. Although fuel is not used to lift the water, it is still used in the installation and maintenance of hand-operated pumps for travel to and from the site, so the program's energy costs, however minor, are not zero. This energy use could be reduced if District Councils were totally responsible for an ongoing hand-operated pump program.

D. Suggestions for Further Design Improvements

One additional iteration of prototype development is needed to improve on the first-generation redesign of the Thebe pump. These modifications should include:

- further reduction of the pump's size (and a concomitant reduction in materials costs);
- guides on the tie-rod bearings;
- suspension of the main shaft from the support stand;
- strengthening the support stand;
- the use of 16-millimeter pump rods;
- overlapping leg joints on the support stand to facilitate removal;
- design of a soak way for boreholes;
- redesign of the tie-rod bearing support brackets;
- redesign of the crank attachment to the crankshaft; and
- a complete set of installation instructions should be written up with input from the pump installation crew.

E. Recommendations

Based on the work done thus far, the recommendations of the BRET project's comparative testing program regarding the human traction Thebe pump can be summarized as follows:

- the Thebe pump clearly has a role to play in satisfying the need for clean drinking water in Botswana at sites with low to medium heads (up to 100 meters) and low water demands (less than 10 cubic meters per day);

- this role is somewhat limited due to DWA's success in providing diesel-pumped reticulated water supplies to a constantly increasing number of small villages--at those sites, a Thebe pump should be considered as a back-up system to supply water during routine or unexpected downtime of the diesel pump;

- compared to DWA, District Councils are in a much better position to determine when the Thebe pump can meet local needs within the councils' jurisdiction; and

- the limited research and development conducted to date suggests that the Thebe pump can be a relatively reliable, cost-effective technology under typical field operating conditions found in Botswana--MMRWA and RIIC should continue to support its development and determine its potential for commercialization.

APPENDIX A

Site Descriptions and Operational Histories

	Monwane	Lentsweletau	Dikgonnye
cylinder size	2.75 x 24	3.25 x 36	2.25 x 24
rod size	16 mm	20 mm	20 mm
resting water level	45 m	9 m	37 m
installation depth	66 m	18 m	60 m
yield per stroke	1.8 l	4.3 l	1.4 l
rebuilding cost	n.a.	n.a.	P1.162
installation date	10/27/83	12/15/83	5/28/85

Monwane -- Rebuilt Pump Number 1

October 27, 1983	installed	
February 7, 1984	checked	operational
September 12, 1984	checked	operational
February 11, 1985	checked	replaced leathers

This pump needed a new cylinder, as the old one was scored from steel filings trapped in the leathers. The mainshaft and plummer blocks, crankshaft and crankshaft bearing assembly, and universal block joint at the bottom of the rocker assembly were rebuilt to make this pump operational.

Lentsweletau -- Rebuilt Pump Number 2

December 15, 1983	installed	
February, 1984	checked	crank pin worn
August, 1984	serviced	replaced crank and bearing
September, 1984	checked	crank and bearing failed
March 1, 1985	serviced	replaced crank and bearing
March 22, 1985	checked	operational

Repairs on pump number 2 included reworking the mainshaft and replacing the mainshaft bearings; fabricating a crankshaft and crankshaft bearing housing; replacing the turnstile bearings, crankshaft and universal block joint on the lower rocker assembly; and installing a chain and chain guide with chain adjuster.

Dikgonnye -- RIIC Redesigned Pump

May 28, 1985	installed	
June 11, 1985	checked	operational

APPENDIX B

Fabrication and Installation Costs for Pump Redesigned by RIIC

Fabrication Costs

materials	P 498.00
labor--75.5 hours at P6 per hour	453.00
RIIC overhead	211.00

Site-Specific Equipment Costs*

cylinder	P 310.00
foot valve	53.00
50-millimeter galvanized steel pipe, three meters x 20, at P22.50	459.00
20-millimeter galvanized pump rods, three meters solid X 20, at P15.90	318.00
50-millimeter borehole clamp	27.80
six bags of cement	27.00

Transportation Costs for Installation

Gaborone to Kanye--296 kilometers round trip, paved road, at P.30 per kilometer	P 88.80
Gaborone to Dikgonnye--round trip, dirt road, at P.42 per kilometer	21.00
Gaborone to Dikgonnye--round trip, paved road, at P.30 per kilometer	30.00

Labor Costs for Installation

10 men for six days at P14.00 per day per man	P 840.00

*Site--Dikgonnye, Kgatleng District.

APPENDIX C

RIIC Design Improvements

Size--the size of the pump was reduced to lower material costs.

Rocker Assembly--Sinter bronzed rod-end bearings are maintenance-free, long-life, suited to oscillating loads, self-aligning and small, prevent the ingress of sand and dust, and have a built-in adjustment for alignment to the borehole. Although they are more expensive than plain bearings, they save much machining and fitting of housings.

Tie-Rod Bearings--steel on steel rod-end bearings for reasons noted in the preceding paragraph and because steel on steel is better suited to alternating load direction. It is preferable to lubricate these bearings, but they work sufficiently well if not lubricated (i.e., 1/15 of lubricated life).

Turnstile Bearings--flange-mounted Y bearings have rotational motion, small self-aligning properties, are easy to mount and cheap.

Chain Guide--guide was cut in an arc to ensure that the lift exerted by the pump was in a vertical line over the borehole to keep the pump rods from wearing against the inside of the drop pipe. Provision was made on the chain for raising the plunger off the bottom of the cylinder to reduce possible damage.

APPENDIX D

Required Installation Tools

Picks, shovels, rakes, a welder, torch, cutting equipment, miscellaneous hardware, etc. are carried on a seven-ton truck as standard construction crew issue. The crew consists of 10 men, two of whom are the driver and driver's helper. Five bags of cement, one ton of crushed stone, the crew's camping equipment, the pump and the following equipment are all transported to the site in a single trip.

four pipe wrenches--one 36-inch, one 24-inch and two 18-inch
one Vas-Trap (pipe clamp)
two chain pipe wrenches
one four-pound hammer
two pipe elevators
21 kilograms of 25-millimeter manila rope
one three-sheave block with hook
one two-sheave block with hook
one 6.8-meter tripod
two large shifting spanners
one pipe cutter
one pipe threader
one pipe vise