PN-AAX-914 6330209

DEVELOPMENT AND DISSEMINATION OF VILLAGE SOLAR WATER HEATERS

Prepared by:

Judith A. Oki
Associates in Rural Development, Inc.
72 Hungerford Terrace
Burlington, VT 05401
U. S. A.
Under AID contract number 633-0209-C-00-1024-00.

Date: August 30, 1985

TABLE OF CONTENTS

Section	Page
Acronyms	i
Preface	ii
I. Executive Summary	1
II. Introduction	2
III. Development and Dissemination	6
A. Needs and Resource Assessments	6
B. Technology Identification, Matching and Selection	6
C. Prototype Development and Testing	7
D. Field Testing and Pilot Education	11
E. Operation and Maintenance	16
F. Economic Analysis	17
IV. Conclusions	19
A. Technical	19
B. Economic	19
C. Sociocultural	19
D. Institutional	20
E. Energy	21
F. Summary	21
V. Recommendations	22
Appendices: A -- Technology Development, Dissemination and Assessment Model Used by the BRET Project	A-1
B -- BRET Project Reports	B-1
C -- Drawings of Solar Water Heater Prototypes	C-1
D -- Solar Water Heater Data Sheets	D-1

ACRONYMS

ACDO	Assistant Community Development Officer
AID	U.S. Agency for International Development
ARD	Associates in Rural Development, Inc.
BEDU	Botswana Enterprise Development Unit
BHC	Botswana Housing Corporation
BREAC	Botswana Renewable Energy Activities Committee
BRET	Botswana Renewable Energy Technology project
BRI	Brace Research Institute
BTC	Botswana Technology Centre
DET	District Extension Team
DPS	Deputy Permanent Secretary
DWA	Department of Water Affairs
GOB	Government of Botswana
IDM	Institute of Development Management
MFDP	Ministry of Finance and Development Planning
MLGL	Ministry of Local Government and Lands
MMRWA	Ministry of Mineral Resources and Water Affairs
NDP-5	Fifth National Development Plan
PCV	Peace Corps volunteer
PFP	Partnership for Productivity
PEC	Project Executive Committee
PP	project paper
PV	photovoltaic
RECC	Rural Extension Coordinating Committee
RET	renewable energy technology
RHC	retained heat cooker
RIIC	Rural Industries Innovation Centre
RIO	Rural Industrial Officer
SDA	Seventh Day Adventists
TESIE	technical, economic, sociocultural, institutional or energy (assessment model)
USDA	U.S. Department of Agriculture
VDC	Village Development Committee
VET	Village Extension Team
VHC	Village Health Committee
VTF	Village Training Facility
WTGS	Windmill Technology Group Serowe
YWCA	Young Women's Christian Association

PREFACE

The Botswana Renewable Energy Technology (BRET) project (number 633-0209) is jointly funded by the government of Botswana and U. S. Agency for International Development (AID). Technical assistance and project management are being provided by Associates in Rural Development, Inc. (ARD) of Burlington, Vermont, under AID contract number 633-0209-C-00-1024-00. This report describes a portion of the work undertaken by Ms. Judith A. Oki, ARD's extension support supervisor for the BRET project.

I. EXECUTIVE SUMMARY

Simple batch solar water heaters for use in village households were developed for pilot diffusion by the Botswana Renewable Energy Technology (BRET) project. The predominant method of heating water for washing and bathing is to place a five-liter tin next to the cooking pots which are on the open fire. It was not possible to determine how much firewood is consumed for heating water by this method. However, since cooking fires are used for heating water, limited development of solar water heaters seemed an appropriate complement to the BRET project's stove work.

This report describes the comparative laboratory tests that were performed on seven prototype designs as well as the process used to narrow the field to one model for pilot diffusion. In addition, the report relates the project's pilot diffusion experience and, perhaps of most importance, provides an economic analysis of the technology.

The BRET project concluded that although the solar water heater is acceptable and useful in some segments of the community, it is not presently an economically viable technology. The difficulty of providing a very low-cost and efficient system is a continuing and well-known one. The traditional method of heating water does not lend itself to precise determination of the amount of fuelwood used to heat water. Also, acceptable temperatures vary. The economic analysis was limited by this lack of data, as are further design considerations.

It is recommended that any further work focus first on gathering the data, and then on determining the cost at which a solar water heater would be an economical investment. If it is possible to design and produce a model in that price range, then research and development might be warranted.

II. INTRODUCTION

The simple, village-level batch solar water heater was selected by the BRET project for development and pilot diffusion in response to the need to reduce consumption of firewood for rural domestic activities. Heating water does not constitute the primary end use of firewood. In fact, because of the way in which water is generally heated (i.e., by placing a five-liter tin of water next to a cooking fire), it is difficult to determine how much wood the activity consumes. Since the BRET project was developing wood-conserving cook stoves to replace open fire cooking, it seemed reasonable to allocate limited staff time and resources to the development and dissemination of a simple batch solar water heater.

The purpose of this report is to describe the BRET project's experience with solar water heaters. It is important to bear in mind throughout this report that this technology was the lowest priority among the village-level technologies, and that prototype development and testing began at a time when technical direction of the project was weak. The BRET project experience, however, provided information relevant to the application of solar water heating at the village household level, a new application in Botswana.

A brief overview of the BRET project is provided below to establish a context for this report.

Overview of the BRET Project

The BRET project was designed as a pilot project by the Government of Botswana's (GOB) Ministry of Mineral Resources and Water Affairs (MMRWA) and the U.S. Agency for International Development (AID). The project paper was completed in September 1980. In August 1981, Associates in Rural Development, Inc. (ARD), of the United States, signed a contract to provide technical assistance and project management, which began in October 1981 and ended in September 1985.

ARD fielded two long-term staff and numerous short-term consultants. During the project's first year, most of the 15 Batswana counterparts and administrative personnel were hired. Five U.S. Peace Corps volunteers (PCVs) worked with the BRET project in 1982 and 1983, while two served during the third year.

The project was designed to further the energy policy goals of Botswana's Fifth National Development Plan (NDP-5). As defined in the project paper, the purposes of the BRET project were to:

- introduce village renewable energy technologies (RETs) that are easily reproduced and inexpensive; and

- research, develop and put into use RETs which can reduce Botswana's dependence on vulnerable supplies of increasingly expensive fossil fuels.

To fulfill these purposes, the following "needs-driven" technology development and dissemination process was used:

- needs and resource assessments,

- technology identification, matching and selection,

- prototype development and testing,

- comprehensive field testing and pilot education, and

- widespread dissemination or transfer to the public domain.

At each stage, data were collected and analyses made of the technical, economic, sociocultural, institutional and energy issues related to each technology (see Appendix A). This information was used to make decisions about whether to continue with the next step in the process, make adaptations or abandon that particular technology. An important underlying approach used throughout the technology development and dissemination process was community and entrepreneur involvement.

The work of the BRET project began with the selection of two pilot villages for research on domestic RETs--Ditshegwane in the Kweneng District, with a population of 820 according to the 1981 census, and Shoshong (population of 4,600) in the Central District. To perform the in-depth domestic needs assessment, an energy use and attitude survey was conducted during 1982 in these two pilot villages, and in three towns and three major villages during 1984. It was found that the availability and conservation of firewood for cooking, lighting and heating was the major energy need in Botswana.

To address this need, research and development work was carried out on a variety of stoves and cooking devices (see Appendix B for a list of BRET reports on these and other technologies). As of the end of the pilot project, both sheet metal stoves and retained heat cookers had been found to be effective and economical and are ready for widespread dissemination.

The BRET project supported solar desalination work carried out by the Rural Industries Innovation Centre (RIIC) in Kanye, as

well as the development of two commercial batch solar water heaters by an entrepreneur in Gaborone. In addition, the projec undertook research and development on several simple batch solar water heating systems.

With regard to community or "institutional" RETs, as they were referred to in the project paper, both the BRET project and other studies determined that the following energy-related needs were of high priority:

- water pumping systems,
- lighting and vaccine refrigeration for health clinics in rural areas, and
- the thermal comfort of buildings in summer and winter.

Thus, as called for in the project paper, the BRET project carried out research, development and field testing of hand, solar and wind pumps (both standard and advanced windmills). During the course of the project, the pumping program was expanded in cooperation with RIIC to include human and animal traction and biogas pumps. Also, due to the clear need for better water pumping information, a comparative pumping assessment was added to the project's activities. At the end of the pilot project, 45 pumping systems of various types had been installed, including a monitoring and data collection program fo the pump comparison effort.

Photovoltaic electrification systems were installed, along with accompanying monitoring equipment, at three rural health centers for lights and refrigeration, and four elementary schoolrooms for lighting. However, because both wind and solar resource data for Botswana are sparse, a program for wind and solar radiation data collection and assessment was developed.

The BRET project carried out a variety of activities relatec to energy efficiency in building design and increasing the thermal comfort of buildings. Research, development, construction and monitoring were completed on eight houses and three small office buildings. A number of training activities on energy-efficient building design were undertaken, and two solar design workbooks and a thermal performance analysis procedure were also developed.

In connection with all of the activities mentioned here, extensive training activities were conducted for BRET staff (some in the United States) as well as a large number of extension workers, technicians, engineers and architects working for various government and parastatal agencies, and rural people in the districts where the BRET project was active.

The remainder of this report describes the BRET project's experience with solar water heaters at various stages of the technology development and dissemination process described above. In addition, an economic analysis of the technology is provided.

III. DEVELOPMENT AND DISSEMINATION

A. Needs and Resource Assessments

A preliminary needs assessment was conducted prior to finalization of the project paper. Simple batch solar water heaters suitable for village use were proposed in that document. Early in the project, as a first step in each of the two pilot villages--Ditshegwane and Shoshong--energy use surveys were conducted to determine primary energy needs. The surveys indicated that wood was the major fuel, used for cooking, heating water, lighting and space heating. While cooking was the primary end use of fuelwood, the same open fire also heated water, and provided lighting and warmth.

The predominant method for heating water for washing and bathing was to place a recycled, five-liter food-aid oil tin next to a fire during cooking. Occasionally, a fire was lit specifically to heat water in the tin. The minimum amount of hot water used per day for one household was five liters, but 10 was a more common minimum. The maximum was 20 liters.

B. Technology Identification, Matching and Selection

The BRET project decided to proceed with a simple batch solar water heater and to look at earthen stove designs that could incorporate a five-liter tin. The fact that Botswana enjoys 255 days of sunshine per year added weight to the consideration of a batch solar water heater system for village use. Systems with capacities in the 10- to 20-liter range were selected.

Selection of prototypes included three other considerations. The first was cost. The income level in Ditshegwane was found to be extremely low. The single trading store, which employs four clerks and a similarly low number of general helpers, and the bottle store, which employs three people, are the only employment opportunities other than civil service jobs (i.e., tribal authority, health worker, literacy worker, community development worker and teachers). All others rely on irregular remittances, the periodic sale of cattle or agriculture. While the income base in Shoshong was more diverse, the majority of the population fell into the very-low to medium-low income range. Therefore, it was necessary to consider systems with minimal cost.

Second, local production was a consideration. Given the cost issues, it was decided that the most responsive solar water heater system would be one that could be locally produced, either by users/owners in a workshop setting or by specially trained producers.

Finally, local practice was taken into consideration. The system had to be able to deliver adequate quantities of water at the appropriate times of day. As mentioned earlier, this meant a 10- to 20-liter capacity. In Shoshong, 149 of the 168 households surveyed indicated a need for hot water in the morning. This presented a dilemma, as overnight storage and low cost have proven to be mutually exclusive. Nonetheless, it was held as an ideal.

In the end, seven prototypes were selected for laboratory construction and testing. The prototypes and test results are described in the following section.

C. Prototype Development and Testing

Although a great deal of work had already been done on simple batch solar water heaters, and tested designs already existed, none of them had been constructed or tested in Botswana, and local costs were unknown. A total of seven prototypes, selected to meet the above criteria, were constructed and tested for comparative laboratory efficiency and villager preference. The initial prototypes, testing methodology and results are described below.

Prototypes

Drawings of the initial prototypes (except the plain oil tin) are found in Appendix C. In each prototype description below, the corresponding appendix drawing number is indicated.

- A concentrating collector. A 10-liter bucket was painted black and placed in an inverted cone of galvanized sheet metal. Cone and bucket were placed inside a larger container--Drawing 1.

- A large, insulated wooden box with permanent spigot. A metal pan was fitted into the box. Water was poured in through a funnel and taken out through the fitted spigot--Drawing 2.

- Two or three five-liter tins were painted black and enclosed in a wooden box, with a 15-millimeter insulating bottom air space and a glazed cover--Drawing 3.

- Two or three five-liter tins were painted black and enclosed in a noninsulated wooden box--Drawing 4.

- A solar pillow made of black or clear vinyl. The pillow was fitted with a spout for filling and emptying the heater--Drawing 5.

- A flat box with glazed cover--Drawing 6.

- A five-liter oil tin painted black (no drawing).

Laboratory Performance Methodology

Two types of performance tests were done on the units. One was a comparative test in which units of energy collected (based on the increase in water temperature) per unit of collector area were determined. The second test determined the efficiency of the heater, i.e., the percentage of available solar energy that was collected by the heater. The summer season tests were conducted by the BRET solar technicians in December 1982, and the winter tests in July 1983. A minimum of three trials were conducted for each model.

The following performance data were collected in order to assess technical performance:

- ambient temperature,

- temperature of water going into heater,

- time going into heater,

- temperature of water at end of test,

- time at end of test, and

- volume of water heated.

Tests were begun in the morning by filling the heaters with a measured volume of water. This volume was either the capacity of the heater or 20 liters. The air temperature and initial temperature of the water were measured with a mercury thermometer, and the temperatures and time of day were recorded. The heaters were placed in an unshaded area and models that could physically be tilted were set at an angle of 25 degrees. At the end of the test period (a minimum of a half day), the same readings were taken.

As each prototype was constructed, materials costs and labor time were recorded. These costs were recorded for future economic analysis of the heaters at the household and village levels.

TABLE 1: COMPARATIVE SUMMARY OF LABORATORY TESTS ON SEVEN PROTOTYPE BATCH SOLAR WATER HEATERS

Model	Max. Temp. Reached, °C		cal/m² $\bar{H}$/(n)	$\bar{M}$ /n	Advantages Perceived During Lab. Tests	Disadvantages Perceived During Lab. Tests	Materials cost per unit (1982)	Labour Cost per unit (Time)
	Su	Wi						
1. 5 litre tin painted black	49		814.29 (7)		Simple, tins available everywhere	Easily cooled by wind Poor performance	0 (recycled)	0
2. Concentrating collectors:					High temperature of water. Locally available, though imported materials	Limited capacity, i.e., 10litres High material cost	P21	P4 (2 days)
2a. half drum	69	37	125.14 (7)	16				
2b. plastic bucket	69	35	1238.46	18	Easy to use			
3. Large insulated box								
3a. White	60	n/a	1507 (7)					
3b. Black	59	39	1778.57	25	Insulated large capacity (20-30L)	Bulky/heavy High cost	P41	P8 (4 days)
4. Insulated box with	53	45	1607 (7)	43	Easy to build Portable Insulated	Costs more than insulated with poorer performance Limited capacity (i.e., 10-15L)	P15	P6 (3 days)
5. Uninsulated box	57	50	1664.84	50	Cheap Simple construction Highest efficiency	Containers (5L tins) leak when overheated	P12	P2 (1 day)

TABLE 1: COMPARATIVE SUMMARY OF LABORATORY TESTS ON SEVEN PROTOTYPE BATCH SOLAR WATER HEATERS (CONT.)

Model	Max. Temp. Reached °C		cal/m² $\bar{H}/(n)$	$\bar{M}$ /n	Advantages Perceived During Lab. Tests	Disadvantages Perceived During Lab. Tests	Materials Cost per unit (1982)	Labour Cost per unit (Time)
	Su	Wi						
6. Solar Pillows								
a. Solar Pillow (I)	53	36	942.33 (6)	14	Cheap Easy to make	Material only available Gaborone	P9	P3 (1/half da
b. Solar Pillow (II)		31		17	Portable	Ground seams leak		
c. Clear Pillow		33		12	Large Volume (20-30L)	Low performance		
7a. Flat Silver Box	53	1203.83 (6)	1203.83 (6)		Simple construction	Hard to empty	P15	P4 (2 days)
7b. Flat Black Box	59	1716.67 (3)	1716.67 (3)		Easy to fill Large volume, i.e.,	Heavy condensation on glazing		

NOTES: 1. H= energy collected/collector area

$$= \frac{\text{mass (kg) (specific heat of } H_2O)(\text{change in temp}}{\text{collector area}}$$

= calories/m²

2. M= energy collected/energy available

$$= \frac{\text{mass (kg) (specific heat of water (change in temp)}}{\text{collector area}}$$

= calories/m²

3. Labour cost based on P2 per day for unskille
v. lage

In addition to technical performance and cost data, the experiments provided insights into the construction and operation of each unit. Table 1 summarizes the overall laboratory results and provides a comparison of the units tested.

Given that warm water is required in the morning, tests were conducted to determine how well the heaters performed overnight. Four containers were tested for overnight efficiency during the winter. The containers were insulated with locally available materials, all of which had approximately the same thermal properties, then stored overnight. The change in temperature was measured from the time the water was placed in the heater until it was taken out the following day. The efficiencies recorded over the entire storage period are shown in Table 2.

Table 2

Overnight Efficiency of Containers

Container	Efficiency
Five-liter tin	29.2°C
Plastic bucket	25.5°C
Large black box	26.5°C
Solar pillow	22.9°C

D. Field Testing and Pilot Education

Based on the laboratory tests, the following models were selected for the user test and determination of villager preference:

- concentrating collectors,
- large insulated boxes,
- five-liter tins in wooden boxes, insulated and noninsulated, and
- solar pillows.

Shoshong was selected for the user test. Because its villagers had more of the required resources and skills and a generally higher income level, the chances of long-term success seemed higher than in Ditshegwane.

User Test Methodology

Laboratory tests indicated that the above models raised the temperature of tap water from 30°C to between 45° and 53° in summer and from 18°C to between 31° and 50° in winter over a minimum of four hours. The devices needed to be used in households to verify the lab results in actual home situations and to determine actual user reactions. The latter was especially important since solar water heaters had not been introduced in villages.

The user test was designed to determine, over a seven-day period:

- user reactions (likes and dislikes, suggested improvements, interest in and skills for constructing the devices, interest in owning one, usefulness for daily activities, suitability for household needs, neighbor reactions, problems encountered in use); and

- performance in household use (number of times used per day, time of day used, temperature of water before and after heating, efficiency compared to lab results).

User Test Procedures

Since this technology was unknown at the village level, the test included simple demonstration and instruction in the use of the heater for the households that volunteered to participate; a seven-day trial period in the households; daily interviews and temperature measurements; and a discussion of home use experiences.

Four key organizations assisted in identifying people for the demonstration: the Botswana Council of Women (BCW), the Young Women's Christian Association (YWCA), the Village Health Committee (VHC) and the adult literacy group leaders. In order to thoroughly present and discuss the technology, it was decided that each organization would send six people and the demonstration would be performed twice, with a limit of 12 per group.

The demonstration was done in the afternoon, the staff having filled the six solar water heaters earlier in the day. A brief explanation of how to use the sun to heat water was provided. It included the concepts of orientation, absorption, radiation, reflection, color, insulation and mass. The features of each model that corresponded to these concepts were pointed out. Participants then felt the temperature of the water and saw

how each unit was filled and emptied. Participants asked the following questions during the demonstration:

- Will the water stay warm overnight or into the evening?
- What time do you put the water in?
- Can you take the water out and replace it?
- Will water reach the boiling point?

All participants wanted to be involved in the home use tests, and in the end, each organization selected an equal number of volunteers. The solar water heaters were delivered to each volunteer household, and observations were made for one full day to ensure that the operating instructions were clear and being followed correctly. Visits were scheduled based on household routines. For each of the next seven days, the households were visited by a BRET staff member. Information on user reactions and performance, as described earlier, was gathered and recorded on the data sheets found in Appendix D.

User Test Results

In all households, the heaters were filled by 9 a.m. daily, properly oriented and kept out of the shade, and reached an acceptable temperature by the time of the staff visit between 3:30 and 4:30 p.m. On the one overcast day of the test period, temperatures reached by the heaters dropped accordingly. Table 3 summarizes the mean temperatures reached by the end of each test day for three of the prototypes. Data for the uninsulated box with three tins and for the solar pillow were not available. It was not possible to calculate efficiencies at this stage, because the daily visits and other duties of the staff prevented them from reading the solar prospector every hour.

Table 3

Mean Temperature Achieved During User Tests

Prototype Model	Day: 1	2	3	4	5	6	7
Concentrating collector	46	46	38	25	51	--	48
Large insulated box (black)	34	40	29	20	29	27	30
Insulated box with three tins	54	51	43	24	40	--	48

All users reported general satisfaction with the units, but no one used the water prior to the visit by the BRET staff. It was not determined whether hot water was needed before that time. It is likely that it was, since 88.7 percent of the households in the original Shoshong survey indicated that they heated water in the morning for washing. The volunteers were reluctant to use the water until told that it was all right to.

Reasons that users gave for liking the solar water heaters were the "high temperature" of the water and the use of three tins at once.

Users gave reasons for disliking the solar pillow, large insulated box and concentrating collectors. One user claimed that the temperature of the water in the solar pillow went down quickly in the afternoon, and that children and goats could easily step on it. The large box was damaged by water spillage. The concentrating collectors were too difficult to use because they were too heavy and bulky to move easily.

During the discussions following the week-long home use tests, the noninsulated box with three tins (total capacity of 15 liters) emerged as the most popular model. It also performed the most consistently. Users also indicated that they could and would build this model themselves if given some help.

The user test, conducted over a one-week period, provided some indication that a simple batch solar water heater could be used in village households and that there was interest in learning to construct the three-tin, noninsulated-box model. Training workshops seemed to be the most appropriate next step.

Training Workshops

Training workshops were intended to respond to the interest generated by the user tests, determine the level of skills possessed by villagers, gather more data about the suitability of the selected unit for local production and produce enough units for installation in households over a longer period of time.

Training workshops were the primary vehicle for installing the three-tin, noninsulated-box solar water heater in a number of households. Two construction workshops were held in Shoshong, a village carpentry workshop that included solar water heater construction was held in Ditshegwane, and construction of the unit was included in larger workshops to introduce RETs to extension workers. In the course of one year, 15 units were installed in households for long-term use. The results of the longer-term experience are found in Section III.E.

The first Shoshong workshop was held in September 1983 with seven participants. The workshop was designed to enable participants to:

- construct, in cooperation with one or two other people, at least one solar water heater,
- describe the components of the unit and how they work to heat water,
- demonstrate how to fill and empty the solar water heater, and
- demonstrate how to position the heater so that it captures the most heat.

While all participants met the last three objectives adequately, they were ill prepared for the actual construction, and the allocated time (five days) was inadequate to acquire rudimentary carpentry skills. Participants were not able to use a measuring tape accurately, a drill properly, or to saw in a straight line. At the end, four units were constructed, most rather ill fitted.

At the end of the first workshop, the following recommendations were made:

- train only those with carpentry skills and let them build and sell the heaters;
- design and cut complete templates;
- design a unit that is easier to build.

The first recommendation was taken, and resulted in a second Shoshong workshop in December 1983. During this workshop, participants fitted the original four units and constructed four more. The participants were experienced with the required tools and interested in learning to build the heaters. At the end of the workshop, the units were sold to interested participants from both workshops for the cost of the materials (P12). Seven people purchased solar water heaters on an installment basis, agreeing to pay over a three-month period.

The second and third recommendations were deferred until it became clear that they were necessary. The third may not be feasible at all.

The Ditshegwane carpentry workshop was based on interest expressed by villagers in learning income-generating skills as well as on the first recommendation from the Shoshong workshop. Given that there were no experienced carpenters in Ditshegwane, a

two-phase workshop was planned. Phase one was conducted by RIIC's village carpenter, Mr. Modise, and phase two by BRET staff and Mr. Modise. During the first phase, participants learned general carpentry skills, using only hand tools. They produced chairs, tables, sideboards and coffins which, in the end, were far more interesting to them than the solar water heaters. Six solar water heaters were built, and workshop participants and BRET's facilitator tried to sell them without success. In fact, as of July 1985, there were no solar water heater users in Ditshegwane.

Two week-long workshops were held for extension workers in the Central District in September and October 1984. The purpose was to introduce RETs to participants and gather information about how RETs might be disseminated. Solar water heater parts were precut to save time and provide some experience in their construction. Participants had to glue and hammer parts together, fit hinges and glazing, and paint the boxes.

Ten units were made during the Central District workshops. These were given to participants based on geographical location, i.e., one per site. A similar workshop was held in Mookane in December 1984, at the request of the assistant community development officer there. In that workshop, an additional four units were produced and left with participants.

At the end of 1984, a total of 27 units had been made through the various workshops. Twenty-one of these were in households, enabling some long-term assessment of usefulness, durability and interest.

It is clear that people with basic carpentry skills can learn to build simple solar water heaters and those without can assemble precut kits. Thus there are two options for production/installation of the solar water heater. The price of P12 was acceptable to those participants in Shoshong and the installment method of payment worked well, with no defaulters. The Ditshegwane experience, however, indicates that the solar water heater is not viewed by potential producers as a serious production item.

The next section describes the BRET project's longer-term experience with solar water heaters and provides further analysis.

E. Operation and Maintenance

As of May 1985, the seven solar water heaters installed in Shoshong were still in use. Of the remaining 14, at least eight were still in use, as reported through a follow-up questionnaire mailed to participants. The number may have been higher, but

only eight questionnaires were returned. The diversity of locations made follow-up visits impractical.

Of the 15 users for whom information was available, 11 use the solar water heater daily. Their comments follow, with the number of responses in parentheses.

- Advantages:
  --makes water hot without using wood (5)
  --saves time (2)
  --uses the sun only (2)
  --warms up water unattended (1)
  --it's economical (1)

- Disadvantages:
  --does not work when it's cloudy (5)
  --water does not remain hot throughout the night (1)
  --water does not stay hot long (1)
  --plastic cover wears out quickly (1)
  --hard to get the plastic cover (1)

The plastic covers referred to above were of an inferior quality, but the only ones available made of clear vinyl. They have been in use for about six months.

A problem not reflected in the questionnaire responses, but reported by a BRET field staff member, was that in one case the chipboard bottom of a solar water heater collapsed after less than three months' use. Apparently, water had been spilled on it frequently. The BRET project replaced that unit. The problem was not reported by any other user.

Neighbors were reported to be impressed with the solar water heaters. Twelve people in Kalamare and five in Mahalapye indicated to extension workers who had the units that they would buy the heaters for P12. Seventeen others indicated that they would like to learn how to make a heater--10 in Tshimoyaopula, three in Letlhakana and two each in Kalamare and Ramokgonami.

While the notion of a heater for the price of P12 was an attractive one, it is highly unlikely that that will be the real cost. The next section describes the economics of the solar water heater.

F. Economic Analysis

The indications above, though limited, place the simple batch solar water heater in an attractive position in terms of acceptability. A financial and economic analysis done in June 1985, however, indicates that this model is not economical.

Based on actual prices for materials, labor, workshops and staff time, the delivered cost of the unit is estimated at P138.78. This is definitely too high, as it includes considerable amounts of staff time and all workshop costs. At that price, the benefit cost ratio does not come close to one. Further, in order for the unit to be economic, the price of fuelwood would need to be at least P5.56 per kilogram.

Given that the delivered production cost is very high and that there is no equivalent market sale price, a similar analysis was performed on the basis of a unit cost of P40. At that price, the benefit cost ratio approaches one, at a fuelwood value of five thebe per kilogram. The minimum price of fuelwood per kilogram necessary to make the solar water heater economical at the P40 price is P3.86 per kilogram.

The analysis was complicated by serious data limitations:

- the BRET project was not able to determine the amount of firewood required to heat water in the traditional way;
- the temperatures achieved by the traditional system vary widely; and
- actual quantities of water consumed per household are unknown.

In addition, the economist had to impute benefit values from theoretical computations. Despite these limitations, it is clear that under present conditions, the BRET solar water heater model does not appear to be economical.

IV. CONCLUSIONS

A. Technical

During the day, the solar water heater achieves satisfactory water temperatures. It does not maintain temperature overnight, but laboratory tests indicate that if the container is wrapped in an insulating material, it will store heat overnight.

The major difficulty is in finding the glazing. Most major towns sell a type of clear vinyl that can be used, but it is not always found in smaller villages.

B. Economic

It was difficult to assess the benefits of the solar water heater, but it appears that the present model, even valued at P40, is not economical. (For a more complete discussion of the economics of the solar water heater, see "Financial and Economic Analysis of Selected Renewable Energy Technologies in Botswana," by Dr. Phillip LeBel, ARD, July 1985.)

C. Sociocultural

There is some interest in the solar water heater among community innovators, i.e., those members of nongovernment organizations in the village who were willing to participate in the user tests and subsequently purchased the heaters and continued to use them over a 10- to 12-month period, and among those extension workers who built heaters during a workshop and used them over a six-month period. People in these groups place some value on their time and recognize the advantage of coming home to warm water at the end of a work day.

An inexpensive solar water heater that would keep water warm over a long period of time (and overnight) would meet the basic requirements of village users. However, it is important to note that although the solar water heater was demonstrated along with other devices, no further requests for purchases were made. It seems that only extension workers, teachers and other community innovators were interested.

The BRET project's experience indicates that motivated users are willing to do the "extra" work involved in filling a batch heater in the morning in order to have warm water at hand later in the day.

D. Institutional

The batch solar water heater seems appropriate for the users, i.e., community innovators and extension workers, who value having hot water on hand.

The Shoshong and Ditshegwane experiences indicate that people can be trained to produce the unit, and theoretically could be trained to produce and market the units. However, this has not happened, even among those participants in the Ditshegwane carpentry workshop who specifically wanted to make products to sell. Only two of the participants indicated that they would try to make the heater to sell, and neither of them had even begun to move in that direction as of September 1985.

The workshop approach to production and dissemination is expensive. It requires skilled trainers who know about solar water heaters as well as carpentry. Because of the low priority assigned to solar water heaters, additional approaches to development and dissemination were not warranted.

E. Energy

It was not possible to determine the energy savings that could be attributed to use of the simple batch solar water heater.

F. Summary

The BRET solar water heater is not economically feasible, although it appears to meet the needs of some members of the community. It was, appropriately, the lowest priority among the BRET project's village RETs. It is possible to train people to use the solar water heater, and there is some willingness to fill a batch system.

V. RECOMMENDATIONS

Any further work on very inexpensive systems would need to begin with gathering the necessary data to determine actual benefits, i.e., amount of fuelwood used in a household to heat water; specific amounts of water used at specific times of day; and the temperature to which water is heated by villagers.

The next step would be to determine at what price the solar water heater becomes economical, given a range of possible fuelwood prices.

If it is possible to design and build a model that delivers the required quantity at the required time and temperature, then pilot diffusion could begin again.

APPENDIX A

Technology Development, Dissemination and Assessment Model Used by the BRET Project

The technology development, dissemination and assessment pproach used by the BRET project was the basis of ARD's original roposal to AID. That proposal outlined the general work plan or the project, including the following efforts and activities:

- redefining, refining and reassessing the BRET project's purpose and outputs, as well as searching for appropriate technologies for Botswana's rural areas;

- collecting necessary data for problem definition, analysis and resolution, not only in terms of technologies, but for awareness campaigns, extension and other project activities;

- selecting technologies based on "needs-driven," rather than "technology-driven," considerations;

- gathering relevant sociocultural, economic, technological, energy and organizational/ institutional data at the village level to understand the energy needs and technological potential in rural Botswana, beginning with energy surveys in pilot villages as the first step in an iterative planning process for choosing and transferring technologies;

- selecting technologies by moving through decision points related to goals, needs, social/cultural patterns and economic analysis;

- making adaptations in technologies used elsewhere, and in Botswana institutions and organizations;

- testing potential RETs in the laboratory, at the project's village training centers and in the field;

- completing additional surveys and similar data collection efforts, as already noted, necessary for the experimental process with various technologies; and

- developing clear objectives and the means for evaluating both project performance and technological innovations, including technical performance, financial and economic costs and

benefits, social and cultural acceptance, institutional appropriateness and transfer or extension strategies.

The BRET project employed and further developed ARD's process for technology development, from the perception of energy-related needs to promoting widespread use of technologies that meet those needs. This process (graphically presented in the figure on the following page) served as the basis for most of the activities undertaken during the project's life and guided the development of each RET. As the figure shows, the process appears to be basically linear, but does allow for feedback at major decision points. In this way, devices were modified, new ideas introduced and decisions made about technology production, dissemination and follow-up.

The Project as a "Learning Laboratory"

Overall, the BRET project employed a "learning laboratory" approach. Basic to this approach is the fact that efforts were needs-driven, as opposed to technology-driven. The fieldwork and needs assessment conducted as part of the village energy survey at the start of the project provided the initial impetus and foundation for subsequent technical activities. After energy needs in two of Botswana's rural villages had been assessed, technologies were matched to those needs, prototype devices constructed and tested, and finally, if a technology showed promise in meeting an identified need, limited field trials were conducted. Feedback is an integral element of the learning laboratory approach to ensure that any problems that arise during field trials can be addressed in the workshop. During the course of the project, the progress of each RET was plotted on a flow chart, and every device had to go through five major steps before it received public acceptance status. Only after a device had made it through the entire development and testing process was it considered for release to the general public.

General Description of the Technology Development Process

The BRET project was involved in research, development and dissemination of two categories of RETs, which moved through the technology development process in different ways, as is discussed subsequently for particular steps in the process. The two types of technologies were:

- rural domestic RETs, targeted at rural households to conserve fuelwood used for cooking, lighting and heating; and

- institutional RETS, intended for community, district and government agencies for water pumping, small-scale electrification and building projects.

The technology development, dissemination and assessment process consisted of five distinct stages:

- needs and resource assessments,
- technology identification, matching and selection,
- prototype development and testing,
- comprehensive field testing and pilot education, and
- widespread dissemination or transfer to the public domain.

In addition, a specific analytical method was used during the process for technology assessment. It is described in a separate section below.

Community and entrepreneur involvement took many forms during the BRET project and was an essential part of every step in the technology development process. Since ARD was using a recognized community development framework, "community involvement" refers to the project's relationship with all individuals, leaders, organizations, and GOB staff and programs related to the geographic areas or technologies of interest. Community input was solicited through a number of activities, including surveys, discussions, interviews with leaders, conferences and seminars, consultations, and requests for assistance in evaluating particular devices or planned dissemination strategies.

Research and development was an essential aspect of the BRET project, with four different types of activities:

- social research and development into needs assessments, dissemination strategies and institutional capabilities;
- renewable energy resources assessments that involved the installation of monitoring equipment and subsequent data collection and analysis;
- development of new devices, such as the sheet metal stove, simple solar water heater and wind-driven mono pump; and
- field testing of off-the-shelf RETs under Botswana's conditions.

Since the project dealt with both technical and social matters, an interdisciplinary staff was needed to carry out its research and development efforts in both areas.

Five Stages in the Technology Development Process

One -- Needs and Resource Assessments

The first step in the process includes the assessment of the target population's actual or perceived needs. Needs can be identified through a number of sources and activities, such as interviews or surveys of the people or communities involved. Many institutions have relevant information about documented needs, and some have even had experience in attempting to meet those needs. This type of information can be gathered by interviewing staff members or reading reports. Some needs have been documented in reports on past studies and assessments as well as in national development plans. Thus, when developing a particular technology, the starting point for a needs-driven project is a clear picture of the need(s) that can be met by the particular technology under consideration.

The initial stage in technology development also includes an attempt to collect enough reliable data to make a realistic assessment of available amounts of renewable energy resources. In Botswana's case, these resources include biomass, firewood, wind and solar radiation. In some cases, there was only limited existing information on these energy sources, so it was necessary to develop data-gathering programs. Potential resources in terms of organizations, institutions, manpower and skills must also be assessed to aid in the selection of technologies and dissemination strategies. Finally, financial and economic resources must be assessed and considered.

Two -- Technology Identification, Matching and Selection

At this step in the development process, a complex issue is addressed--identifying potential technologies that can use the available resources to meet existing needs. It may be possible to utilize or modify a known RET, or an attempt can be made to develop a totally new device. Since the latter option requires considerable research and development time and resources, the BRET project focused on using or modifying existing technologies. However, its work on the wind-driven mono pump with RIIC approached the development of an entirely new technology. On the other hand, development of a new pedal-powered sorghum de-huller was investigated, but not pursued, because there would have been insufficient time during the project to complete the necessary resource assessment and research.

Three -- Prototype Development and Testing

Following needs identification and the selection of appropriate RETs, a number of potential technology designs are considered and prototype models developed. Actual working units are constructed and tested. Important considerations include both potential energy savings and information from the assessment of existing or potential social, institutional and construction skill resources for eventual production and dissemination of the device.

Actual working prototypes are tested in the research and development lab to determine how well they work, whether they are likely to satisfy identified needs with less work and increased energy efficiency, and the potential economic savings. Once these questions are answered, it is also necessary to consider potential social costs and institutional structures required to implement eventual construction and dissemination of the technology.

In the case of the project's institutional RETs, prototypes were installed in field settings to examine their operation under natural conditions and determine whether the devices could be operated and maintained by local technicians. From these tests, it is possible to estimate the kind of additional training required for operation and maintenance personnel. In the case of the BRET domestic technologies, these devices were constructed and/or used by villagers to assess their performance under fairly normal, daily use by ordinary people, not trained lab technicians. In each case, a thorough testing and data collection procedure was developed and employed.

Four -- Comprehensive Field Testing and Pilot Education

By the time the BRET project reached this step with a particular technology, it had already found that the device was more efficient and afforded potential energy savings in comparison to the technique(s) used previously. Still, some questions remained about the technology's performance under typical field conditions, whether potential savings would be actualized, and the skills and costs involved in maintenance and repair. Before proceeding with nationwide dissemination, any new RET should be operated in the field by many ordinary people and/or technicians in conjunction with careful monitoring. This step helps identify operational problems and training needs, and solidify plans for general dissemination. For the project's institutional technologies, this step was actually part of the data-gathering undertaken to answer the questions just noted.

Villagers and institutional representatives were invited to demonstrations of rural domestic RETs and installations of

institutional technologies to become acquainted with the potential of these devices to meet personal or institutional needs using existing renewable energy resources in Botswana. These working demonstrations proved to be much more informative and convincing than written information, theoretical discussions or even pictures.

Five -- Widespread Dissemination/Transfer to Public Domain

When a technology gets to the final step in the development process, it is ready to become part of the general social, cultural, technical and institutional scene. For rural domestic RETs, dissemination may involve large-scale GOB or government-supported campaigns. In some cases, these efforts will involve only the extension cadres, while in others, the combined efforts of extension personnel, producers and entrepreneurs will be required. The degree of involvement by various parties will depend on whether the technology is intended to be made by the owner or produced commercially. The dissemination of institutional RETs means developing national policies and programs, as well as the purchase and installation of technologies through numerous ministries, departments and district councils. In most cases, no single institution, ministry or department can handle the entire dissemination process, as it requires inter-organizational skills, planning and cooperation. With transfer to the public domain, project activities such as training local artisans to produce BRET stoves or fostering the private manufacture of wind machines and solar water heaters were the preferred strategy.

Technology Assessment

Whenever the BRET project was involved in technology assessment--primarily during stage three of the development process discussed above, but sometimes as part of other steps in the process as well--the model presented in this subsection was employed. All of the reports on individual technologies are organized according to the five areas involved in any substantial technology assessment:

- technical,
- economic/financial,
- social/cultural,
- institutional/infrastructure, and
- energy/environmental.

There are at least three topics involved in a technical analysis:

- the specifications, engineering design and component parts of the device;
- a study of the technology's performance--how much work it can do with what resources; and
- reliability and durability of the equipment, and concomitant needs for maintenance and repair during the technology's life span.

The economic/financial analysis involves a study of a technology's cost and the value of its benefits in comparison to other devices that can be used to accomplish the same task, regardless of whether they use fossil fuel or renewable energy resources. Both financial and economic analyses can be performed, and require reliable, valid financial figures for costs and benefits, including all hidden costs and subsidies, shadow prices and discount rates. In general, there are non-quantifiable factors that figure importantly in the decision-making process, which must be articulated in addition to the quantifiable parameters. Consequently, it is necessary to clearly specify all of the assumptions relating to these analyses. Common approaches, assumptions and types of data collected can be used for any analysis and comparison of technologies that perform a similar task, such as water pumping.

Technology introduction has an impact on existing social/cultural structures. At issue here are identifying these impacts, the sociocultural institutions that are affected, problems attending the introduction of a particular device, social and cultural obstacles to technology transfer, potential changes in social patterns required for technology acceptance, existing or new cultural or social structures that might be useful for introduction of the RET. Again, common assumptions should be articulated and agreed on for comparisons between existing and new technologies.

The institutional/infrastructure analysis concerns organizational resources needed to introduce and maintain the technology. Sometimes, such structures already exist; in other cases, they must be changed; and occasionally, new organizational structures have to be created. Training may be needed and this type of analysis concerns by and for whom, when, where, for how long, etc., as well as what existing or new coordinating and information-sharing groups might need to do. This portion of the assessment model relates to both the informal and formal sectors of the GOB, ministries, departments, districts, para-statal organizations, and private construction and manufacturing firms.

In the energy resource/environmental analysis, it is important to consider Botswana's sunny, hot climate and delicate vegetation base. For instance, increases or decreases in fuelwood consumption could have a substantial environmental impact. This type of analysis is also concerned with how the energy utilized by a particular technology fits into national energy goals and renewable energy objectives, in terms of the energy source used, resources saved and overall effect.

In summary, this technology assessment model can be used for any technology by any organization. Although some groups could complete the entire assessment, it may be more efficient to make it an inter-organizational task, utilizing the competencies of relevant ministries, departments and para-statal agencies to carry out the five types of analyses that make up the total assessment. This sort of inter-organizational approach develops knowledge and potential interest in a technology that crosses disciplinary and organizational lines, which would aid in the eventual dissemination process. If such an approach is taken, the overall technology assessment must be managed by a team that has the necessary interdisciplinary technical, social and organizational skills.

APPENDIX B

BRET Project Reports

Awareness Plan and Implementation Guide for the BRET Project. Morgan, E. February, 1983.

Botswana Renewable Energy Technology Project--Final Report. December, 1985.

Botswana RET Project First-Year Annual Report. January, 1983.

Botswana RET Project Second-Year Annual Report. January, 1984.

Botswana RET Project Third-Year Annual Report. January, 1985.

Botswana Urban Domestic Energy Use and Attitude Survey. Gay, J. and Zietlow, C. August, 1985.

Botswana Village Energy Survey Report. Oki, J. September, 1983.

BRET Metal Stove Production Guide for "B" and "Delta 3" Stoves. Brunet, E. and Ashworth, J. July, 1984.

The BRET Metal Stoves: An Approach to the Disappearing Forests. Zietlow, C. and Dube, W.

BRET Thermal Performance Analysis Method--Documentation for Worksheet, Version 1.0. Matthews, S. and Niles, P. May, 1985.

1985 BRET Workshop on Building Energy Design--Workbook Materials (draft). Niles, P. and Matthews, S. May, 1985.

Building Public Awareness in Botswana. Morgan, E. February, 1983.

Comparative Testing for Water-Pumping Systems Installed in Botswana. McGowan, R. and Ashworth, J. July, 1984.

Computer Analysis of Shoshong VTF Solar Rondavel. Niles, P. March, 1985.

Cooler in Summer/Warmer in Winter: How to Improve Your SHHA House. Matthews, S. July, 1985.

Design of Demonstration Passive Solar Buildings. Temple, P. and Norris, D. February, 1982.

Development and Dissemination of Retained Heat Cookers. Oki, J. August, 1985.

Development and Dissemination of Village Solar Water Heaters. Oki, J. August, 1985.

Domestic Energy Use in Two Villages: An Addendum to Botswana Village Energy Survey. September, 1985.

Earthen Stove Consultancy for the BRET Project. Penty, C. December, 1984.

Energy Design of Buildings in Botswana--BRET Project Accomplishments, Current Status and Recommendations. Hamilton, B. September, 1985.

Extension Activities of the BRET Project. Oki, J. September, 1985.

Fenestration Design for Daylighting Vocational Training Center Classrooms. Matthews, S. January, 1985.

Field Tests of Small-Scale Water Pumping Systems in Botswana. McGowan, R. and Hodgkin, J. October 25, 1985.

Financial and Economic Analysis of Selected Renewable Energy Technologies in Botswana. Lebel, P. July, 1985.

Financial and Social Benefit/Cost Analysis of RETs in Botswana. Ashworth, J. March, 1984.

Health Center Electrification in Botswana: Preliminary Findings. Nolfi, J. January, 1982.

Insulated Cardboard Ceilings. Meijer, T. March, 1985.

An Introduction to Passive Solar Design--A Presentation to Building Inspectors for Ministry of Local Government and Lands. May, 1984.

Measured Performance Analysis of the SHAKAWE-EC: A Prototype Passive Solar House for Botswana. Hamilton, B. October, 1984.

Monitoring of Passive Solar Buildings in Botswana. McGowan, R. 1983.

New Chancery for Lusaka--Atrium Thermal Analysis. Matthews, S. March, 1985.

No-Fuel Cooking in the Wonderbox...How it Works and Recipes. Baintlafatsi Leteemane.

Overview of Staff Training: BRET Project. April, 1984.

Overview of U.S.-Based Training for BRET Project Technical Coordinator. April, 1985.

Parametric Studies of Thermal Options for Low-Cost Housing. Niles, P. April, 1985.

Passive Solar Design Workbook. Hamilton, B., Sachs, B. and Norris, D. March, 1984.

Passive Solar Design in Botswana. May, 1984.

Performance Evaluation of the BTC Passive Solar Office Building. Hamilton, B., Sachs, B. and Masire, G. September, 1985.

Photovoltaic Electrification of Health Clinics and Village Schools in Botswana. McGowan, R. September, 1985.

Portable Sheet Metal Stove for Botswana. Mugabe, M. and Zietlow, C. September, 1985.

Preliminary Technical and Economic Comparison of Wind Pump Systems in Botswana. Hodgkin, J. and McGowan, R. August, 1985.

Production Training for BRET Metal Stoves. Brunet, E. July, 1984.

Prototype Metal and Mud Wood-Burning Cook Stoves for Botswana. Geller, H. May, 1983.

A Report on the Renewable Energy Conference, Harare: March 1984. Masire, G., Moswete, M., Leteemane, B., Sentle, J., Tebele, K., and Motshoge, M.

Solar Home Brochure for the BRET Project. September, 1983.

Stove Consultancy for BRET Project. Burket, G. and Thomas, M. February, 1983.

Technical Adaptation: BRET Wood-Conserving, Metal Stoves. Brunet, E. July, 1984.

Technical and Economic Comparison of Small-Scale Solar Water Pumping Systems in Botswana. McGowan, R. and Hodgkin, J. August, 1985.

The Technology Adaptation Process: Steps Taken to Transform the BRET Metal Stove Prototypes into Finished Commercial Models (occasional paper number 3). Ashworth, J. H. June, 1984.

Technology Development for the BRET Project. Alward, R. February, 1983.

The Thebe Pump--A Human Traction Pump for Botswana. Shields, J. and McGowan, R. September 26, 1985.

Thermal Analysis of Tutume Health Center. Matthews, S. May, 1985.

Thermal Analysis of Type-C Staff Houses for District Councils in Botswana. Niles, P. March, 1985.

Thermal Performance of Proposed VTC Buildings. Niles, P. February, 1985.

Training Needs Assessment for RETs. Burrill, G. June, 1985.

Two Types of Hand Pumps--Results of Field Tests in Botswana. Hodgkin, J. and McGowan, R. August, 1985.

Use the BRET Stove. Dube, W. March, 1985.

Ventilation Recommendations for MLGL/BHC Mid-Level Housing. Matthews, S. January, 1985.

Wind Energy Technology for the BRET Project. May, 1983.

Windows for Improved Ventilation (a catalog supplement). Meijer, T. August, 1985.

Winter Performance of the Solar House--Shakawe/EC. Zietlow, C. and Masire, G. 1983.

Wood Stove Consultancy for the BRET Project. Geller, H. May, 1983.

APPENDIX C

Drawings of Solar Water Heater Prototypes

DRAWING

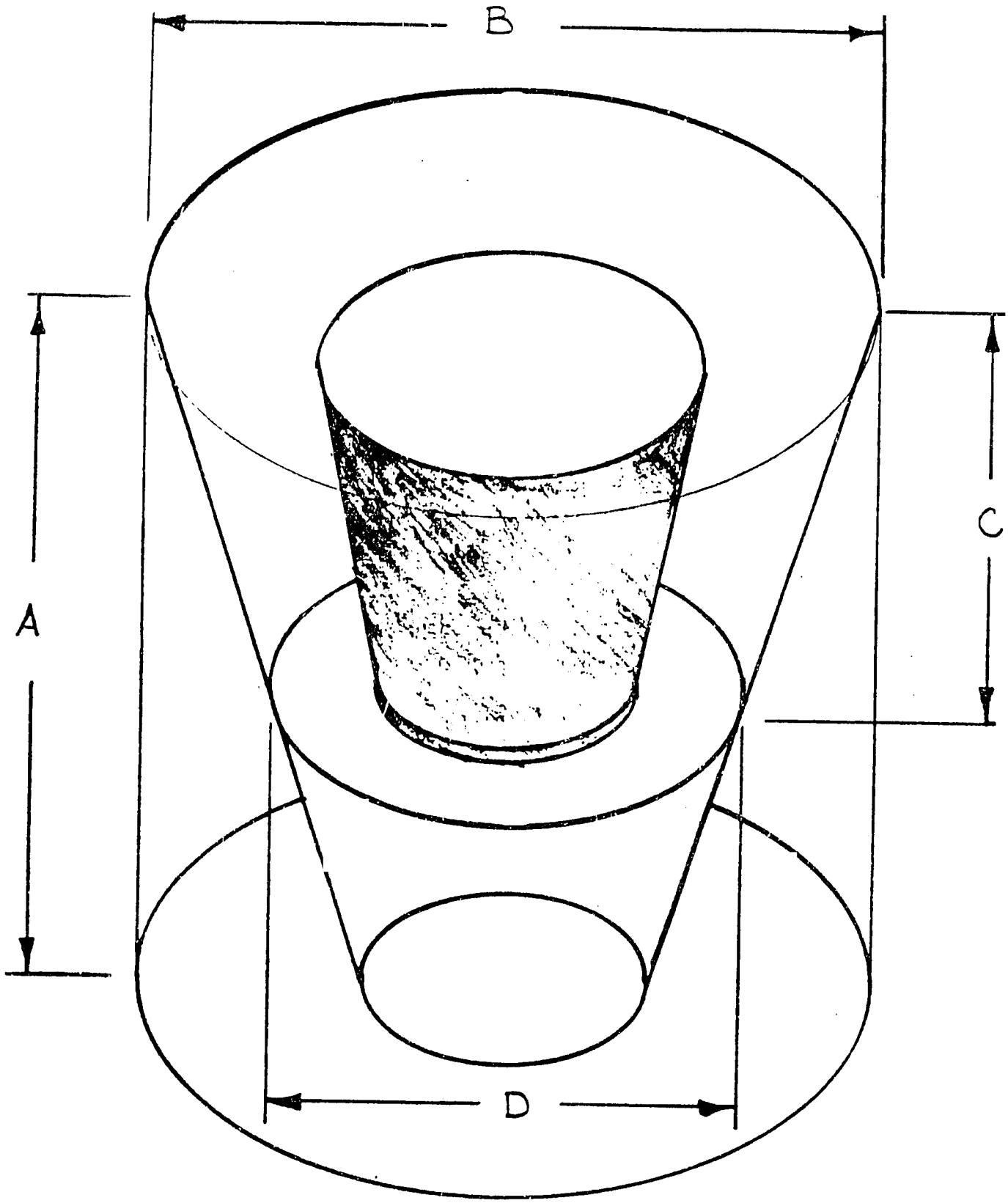

	A	B	C	D
½ 200 LITER DRUM	450	560	300	300
PLASTIC BUCKET	450	580	300	300

DRAWING 2

BIG WHITE BOX & BIG BLACK BOX

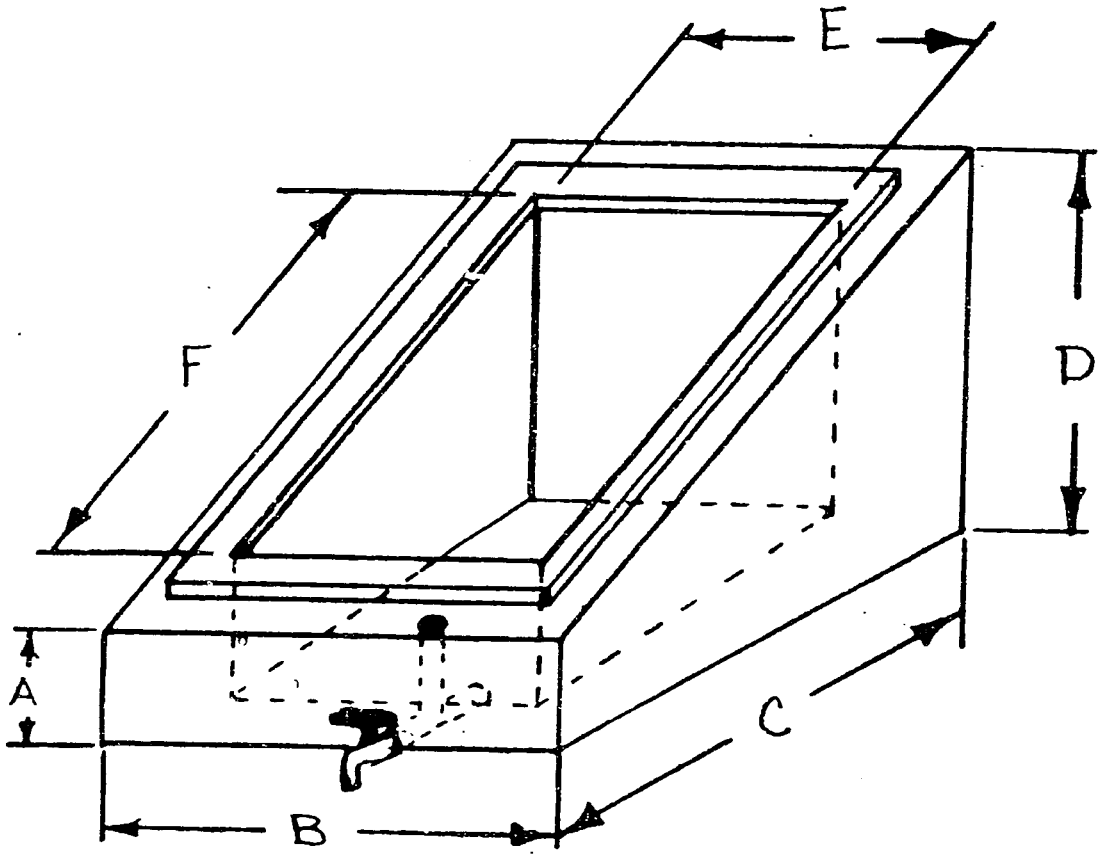

	BIG WHITE BOX	BIG BLACK BOX
A	140	120
B	830	600
C	940	660
D	410	400
E	600	400
F	600	440
VOLUME	20 L	20 L

DRAWING 3

INSULATED BOX

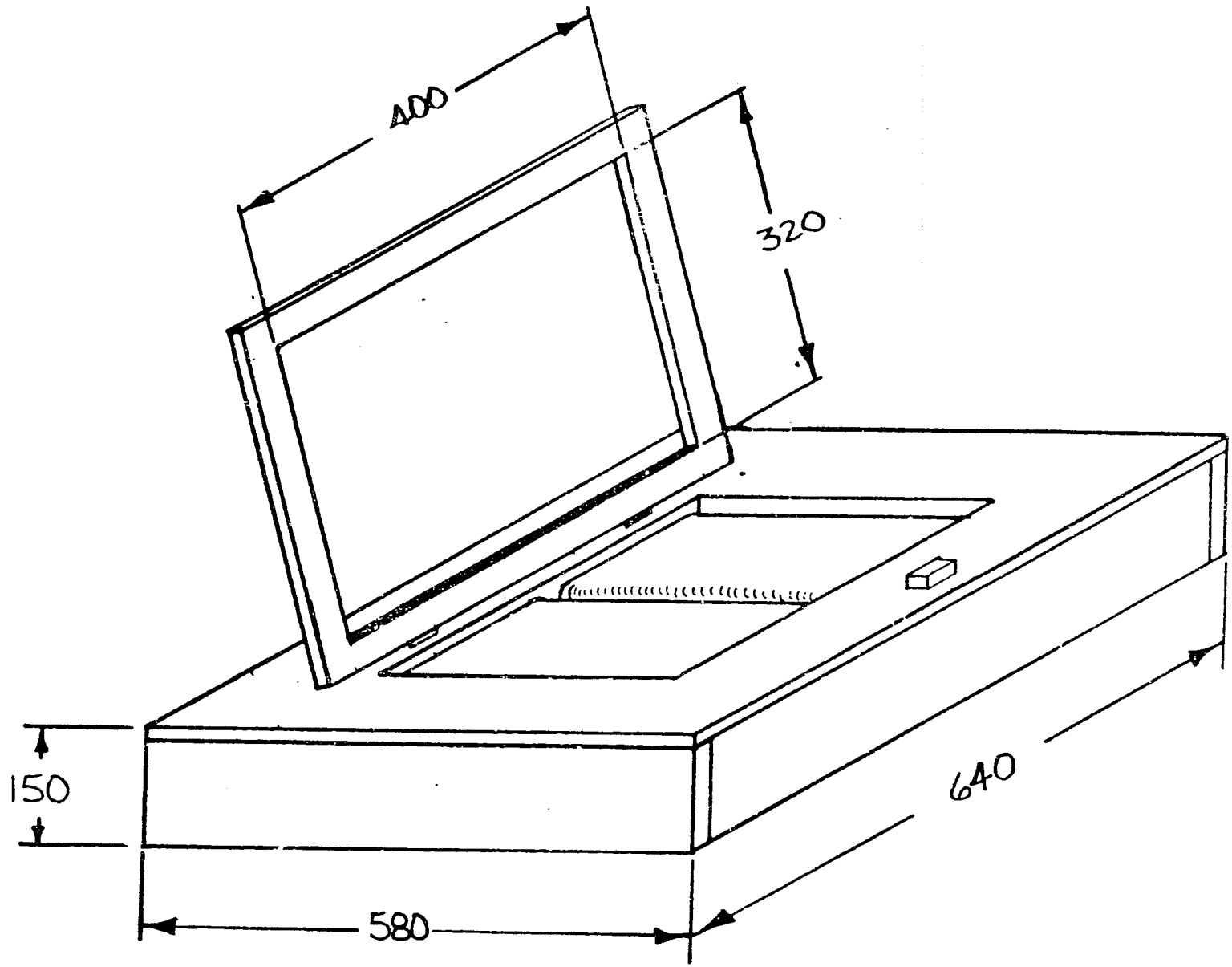

DRAWING 4

NON INSULATED BOX

	2 TIN	3 TIN
A	330	360
B	425	690
C	150	150
D	260	290
E	350	620
VOLUME	7.57L	15L

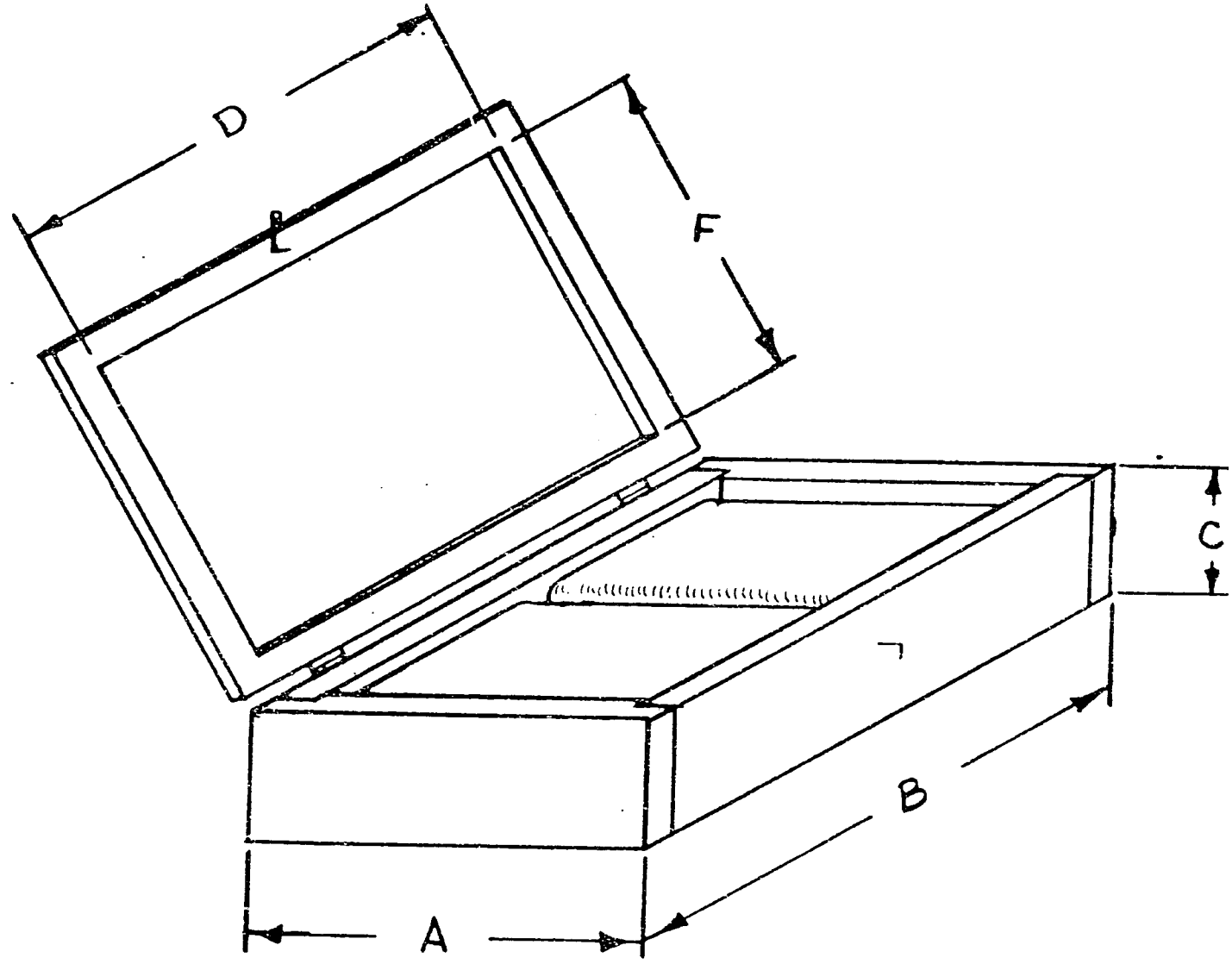

DRAWING 5

SOLAR PILLOW

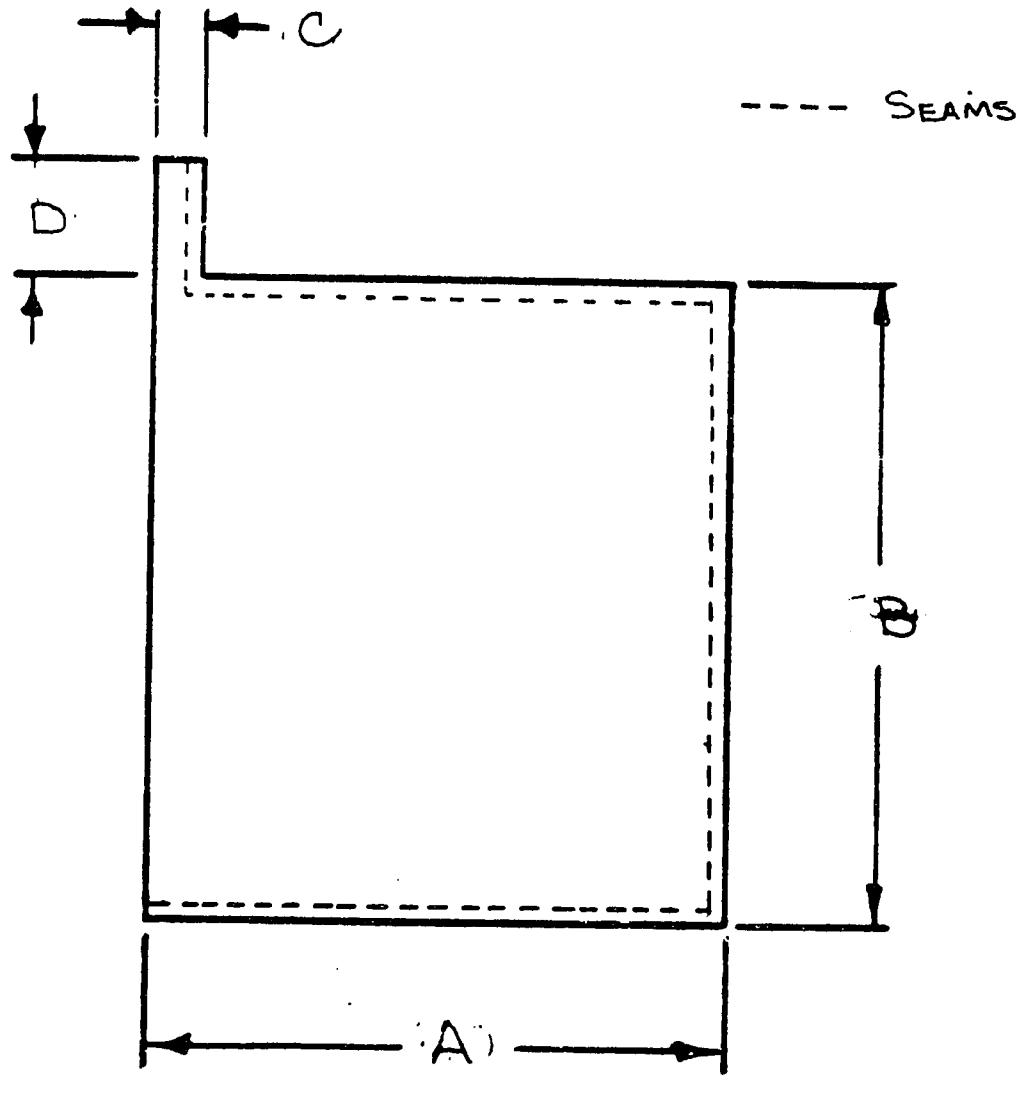

	A	B	C	D
PILLOW I	710	840	60	120
PILLOW II	670	820	80	120
CLEAR	1000	1270	70	150

DRAWING 6

FLAT SILVER BOX & FLAT BLACK BOX

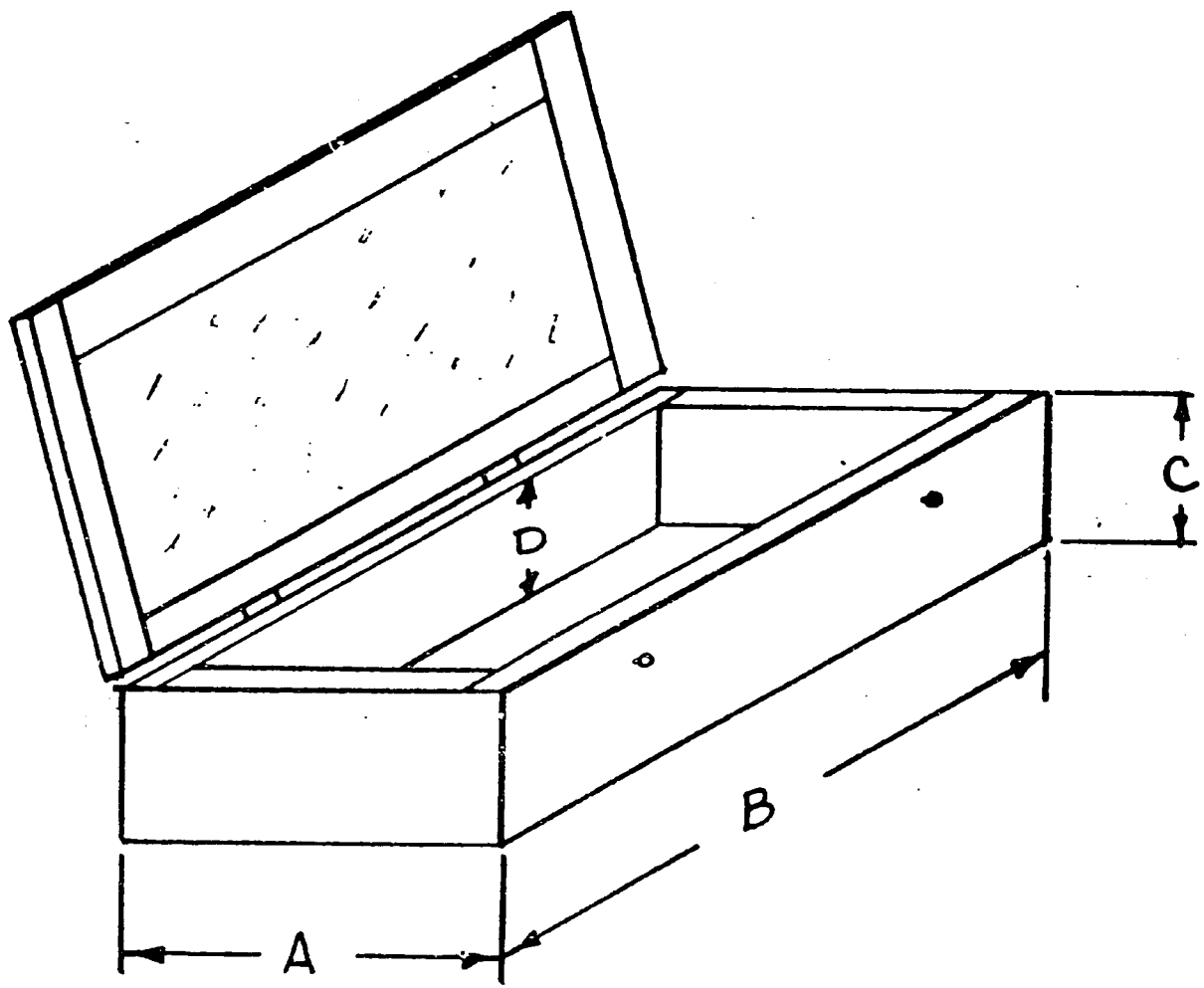

	FLAT SILVER BOX	FLAT BLACK BOX
A	420	560
B	1000	660
C	150	300
D	110	230
VOLUME	20L	20L

APPENDIX D

Solar Water Heater Data Sheets

SOLAR WATER HEATER TEST SHEET

DATE _____ RUN # _____ TESTER _____

ME START _____ TIME FINISH _____ ΔTIME (HR) _____

R TEMP START _____ AIR TEMP FINISH _____ $\Delta TEMP_{AIR}$ (°C) _____

TAL INSOLATION $\frac{WHR}{m^2}$ _____ 3.6* INSOLATION $\frac{KJ}{m^2}$ _____

*4.2

DEL	WATER $TEMP_{IN}$	WATER $TEMP_{OUT}$	ΔTEMP	VOLUME	MCpΔT	COLLECTOR AREA	INSOL ON COLLECTOR	η

OBSERVATION

Shoshong User Test Data Sheet for Solar Water Heaters

Name of Household _____ Recorder _____

Size of Household _____ Model of Heater _____

Where does user get water to fill heater ? Tape _____

Storeage inside _____ Storeage outside _____ Other _____

OBSERVATIONS: The recorder willlook at how the solar heater is being use

Answer yes or no Daily

DATE							
Is the heater facing the sun ?							
Is the heater shaded during the day?							
Is the heater filled properly ?							
Other comments							

DIRECT QUESTIONS: The recorder will ask these questions daily

DATE							
Did they use the warm water?							
When did they fill the heaters ?							
When did they use the water ?							
What did they use the water for ?							
How much water did they use ?							

PROBLEMS:

Water Temperature of solar water heater

DATE							
Time							
Temperature of water °C							
Volume of water Liters							

Improvements and other comments:

USER REACTION: The recorder will talk with user and through this indirect questioning will find out user reaction. Date the comments. This part should be done by end of user test

Likes and dislikes

Suggested improvements

Interest in building one

Would they be able to build one

Would they like to have one or use one

Was it useful for daily activities

Was the water ready at the "right" time?

Was the water hot enough ?

Was the quantity of water (capacity of the heater) enough? If not, how much more ?

What did the neighbors think ?

Would they buy one ? If so, how much?

Other comments