PN-AAX-900 6330307

PROTOTYPE METAL AND MUD WOOD-BURNING COOK STOVES FOR BOTSWANA

Prepared by:

Howard S. Geller, ARD Stove Consultant
Bai Leteemane, Theresa A. M. Powers and James Sentle,
Stove Technicians, BRET Project
Associates in Rural Development, Inc.
362 Main Street
Burlington, VT 05401
U. S. A.

Under AID contract number 633-0209-C-00-1024-00.

Date: May, 1983

TABLE OF CONTENTS

Section	Page
Preface	i
I. Introduction	1
II. Metal Stoves	4
A. Design Process	4
B. Materials and Construction Techniques	6
C. Models	7
III. Mud Stoves	11
A. Materials and Construction Techniques	11
B. Designs	12
IV. Testing Methodology	18
A. Procedure	18
B. Calculations for Individual Tests	19
C. Calculations for Series of Tests	21
V. Results	23
A. Metal Stoves	23
B. Mud Stoves	27
VI. Discussion and Conclusions	32
A. General Findings	32
B. Metal versus Mud Stoves	32
C. Metal Stoves	33
D. Mud Stoves	34
References	36

Appendices:

A -- Water Boiling Test Data and Calculation Form
B -- T-Table
C -- Water Boiling Test Data
D -- Estimate of the Conductivity and Heat Loss Rate from the Air Space Between the Walls of the Final Experimental Model 3 Stove

PREFACE

This technical report presents part of the work undertaken by Mr. Howard S. Geller at the Botswana Renewable Energy Technology (BRET) project from February 3 through April 14, 1983. Mr. Geller is a stove specialist with Associates in Rural Development, Inc. (ARD), the contractor implementing the BRET project for the U. S. Agency for International Development (AID).

One or more of the authors participated in the design and construction of all the stoves described. In addition, Mr. Glenn Burket, another ARD stove specialist, supervised and assisted in the construction of the metal stoves, and Ms. Margaret Thomas, also an ARD stove specialist, oversaw and helped in the construction of the Tungku Lowon stove in Kanye. All the authors conducted stove tests and contributed to the writing of this report, although Mr. Geller was the principal author and edited the entire report. Thanks are due to Ms. Mwammy Khatibu for her skillful typing of the initial drafts.

I. INTRODUCTION

Surveys by the BRET project in the villages of Ditshegwane and Shoshong, and other cooking observations show that a wood-burning, open fire built under a three-legged pot is the most common method of cooking in rural areas and villages of Botswana. While a few people use sheltered cooking areas or wind breaks, most cooking is done in open areas. During cold, rainy times of year, cooking is sometimes done indoors. Cast iron, three-legged cooking pots, largely imported from South Africa, are used in some households with a metal tripod stand to raise pots further off the ground.

Sorghum and maize are the food staples in Botswana. Generally, they are ground into flour and cooked as porridges. Sometimes porridge is eaten with a vegetable "sauce" or, less frequently, eaten with boiled meat. Women normally cook meals two or three times a day, although a BRET survey, conducted in May/June 1982, showed only one meal per day was common in Ditshegwane, a village of about 600 people, 75 km northeast of Molepolole. Cooking observations in about 30 households in Shoshong, a moderate sized village near Mahalapye of about 4,000 people, showed an average cooking time of 1.5 hours.

Fuelwood is gathered predominantly by women in both Shoshong and Ditshegwane, and other villages as well. Women conventionally collect dead rather than green wood. In Shoshong, women typically walk four to 12 km one way for fuelwood. About 50% of the 160 interviewees in Shoshong stated that lack of fuelwood is a problem. Another study in two villages about 25 km north of Gaborone found that fuelwood is becoming alarmingly scarce in those vicinities (Jelenic and van Vegten 1981). Researchers documented a number of "symptoms" of this problem, such as disappearing tree species and longer collection times. On the other hand, in Ditshegwane, women are walking only two to five km for headloads of wood, which is not generally perceived as a hardship.

The problem of diminishing fuelwood supplies particularly surrounding the larger villages in Botswana is now recognized by many officials and energy specialists (ARD, Inc. 1981, Wisner 1982, MMRWA 1981). Because fuelwood scarcity now confronts a significant number of rural households and the problem is increasing, the development and dissemination of fuel-efficient cookstoves is a high priority of the BRET project.

Work on cookstoves has proceeded along two tracks, one being high-mass mud stoves and the other being portable sheet metal stoves. The "appropriateness" of mud stoves in Botswana has been questioned because of the mobility of the people, their preference for outdoor cooking, secondary uses of the open fire and the training and dissemination effort necessary for mud stoves to have a national impact (Shaikh 1980). Furthermore, mud stoves are susceptible to damage from the cooking pots. The intention of the BRET project is to

recognize these problems and develop fuel-saving mud stoves, involving minimal or no cash outlay, which are simple, durable, easy to construct and repair, and as well-suited to existing cooking conditions (i.e., pot types, secondary fire uses, etc.) as possible.

Metal stoves, on the other hand, have obvious advantages, such as portability and durability, but they will have to be commercially made and paid for. Here the intention is to develop fuel-efficient stoves that can be built by local metalworking artisans and are as inexpensive as possible within the constraint of reasonable durability.

Hence, the overall objective is to develop and present to people a number of cookstove options--metal and mud stoves and perhaps different designs within each of these categories. Each option is directed to people with different needs, preferences and resources. Therefore, the different tracks do not compete or conflict. Just as there is no one cookstove "solution" applicable across countries and cultures, there most likely is a place for a variety of cookstoves in Botswana--a country where significant differences both between and within villages exist.

This technical report describes BRET's work on cookstoves through April 1983. It contains:

- a description of the prototype stoves that have been constructed;
- the techniques used so far to evaluate the performance of stoves;
- the results of the first phase of stove testing; and
- conclusions and plans for the near-term.

So far, the BRET project has concentrated on the development of prototype designs, experiments with different materials, and first stage "laboratory" testing to evaluate fuel efficiency and other performance factors. Conspicuously absent are villagers--those who might eventually use cookstoves.* Once our prototype designs are final, we envision that villagers will play an increasingly important role in stove development, evaluation and dissemination. Tests in future stages will involve cooking by village women to obtain feedback from users as well as actual fuel savings data (VITA 1982). These tests will focus more on the cooking "system"--the combination of stove, operator, fuel and food--and less on the device and its details. Furthermore, the stove designs could change dramatically, based on input from potential users as well as input from potential

*As will be explained, important information for the design of stoves was obtained from BRET's village surveys. The surveys, of course, involved and focused on villagers.

producers. Thus, the early technical assessments described in this report are but a few steps, albeit important ones, in the evaluation of efficient cookstoves and "appropriate technologies" in general (Burrill 1980).

II. METAL STOVES

A variety of conditions in Botswana lead to the use of portable, metal wood-burning cookstoves. First, rotation between indoor and outdoor cooking, already mentioned. Second, the traditional migration of rural people throughout the year between the village home, the cattlepost and quarters at one's agricultural lands. These two factors suggest that portability is advantageous. The standard, cast iron, three-legged cooking pots (see Figure 1) imply that some type of metal stove is desirable, since commonly used pots weight five to 10 kg empty. Alternative stove materials, such as pottery or adobe, are more prone to damage from the weight of pots and their sharp legs. Finally, the relatively short cooking period suggests that a low-mass, metal stove is a sound design from a technical viewpoint.

Regarding the production of portable metal stoves, there is a well-established group of small-scale sheet metalworking artisans ("tinsmiths") in Botswana. In towns and largers villages throughout the country, they often work out of their homes producing other widely used domestic products, including buckets, wash basins and food storage containers. Naturally, there are already established channels for marketing these products.

A. Design Process

The design of the prototype metal stoves described in this report was influenced by a few portable stoves from other countries as well as by the conditions in Botswana. The basic shape of the stoves is similar to the shape of some highly efficient ceramic woodstoves made on an experimental basis in Upper Volta in 1982 (Yameogo, G. et al. 1982). Likewise, similar portable sheet metal stoves utilizing dung fuels have been constructed and are undergoing field evaluation in Lesotho (Weyer 1982). In addition, portable metal charcoal stoves with insulating liners are routinely used in Thailand and are being developed and promoted in Kenya (Kinyanjui 1982).

Experimental stoves for Botswana were developed by first reviewing relevant information previously obtained by the BRET project. The survey of approximately 30 households in Shoshong showed that 80% of all cooking pots are sizes 1, 2 or 3 (3, 5 or 7 litres in capacity). Therefore, the stoves are designed to accommodate all three of these pot sizes. For the evening meal, one cooking pot or one cooking pot along with a separate water heating pot or container was used in 50% of the observations. Even when more than one food item is prepared, cooking is often done consecutively (one item after the other). Since a one-pot stove is also the easiest to construct, it was decided to make the initial models with a one-pot opening.

Figure 1. Experimental Model 1 Stove

(Drawing by Glenn Burket)

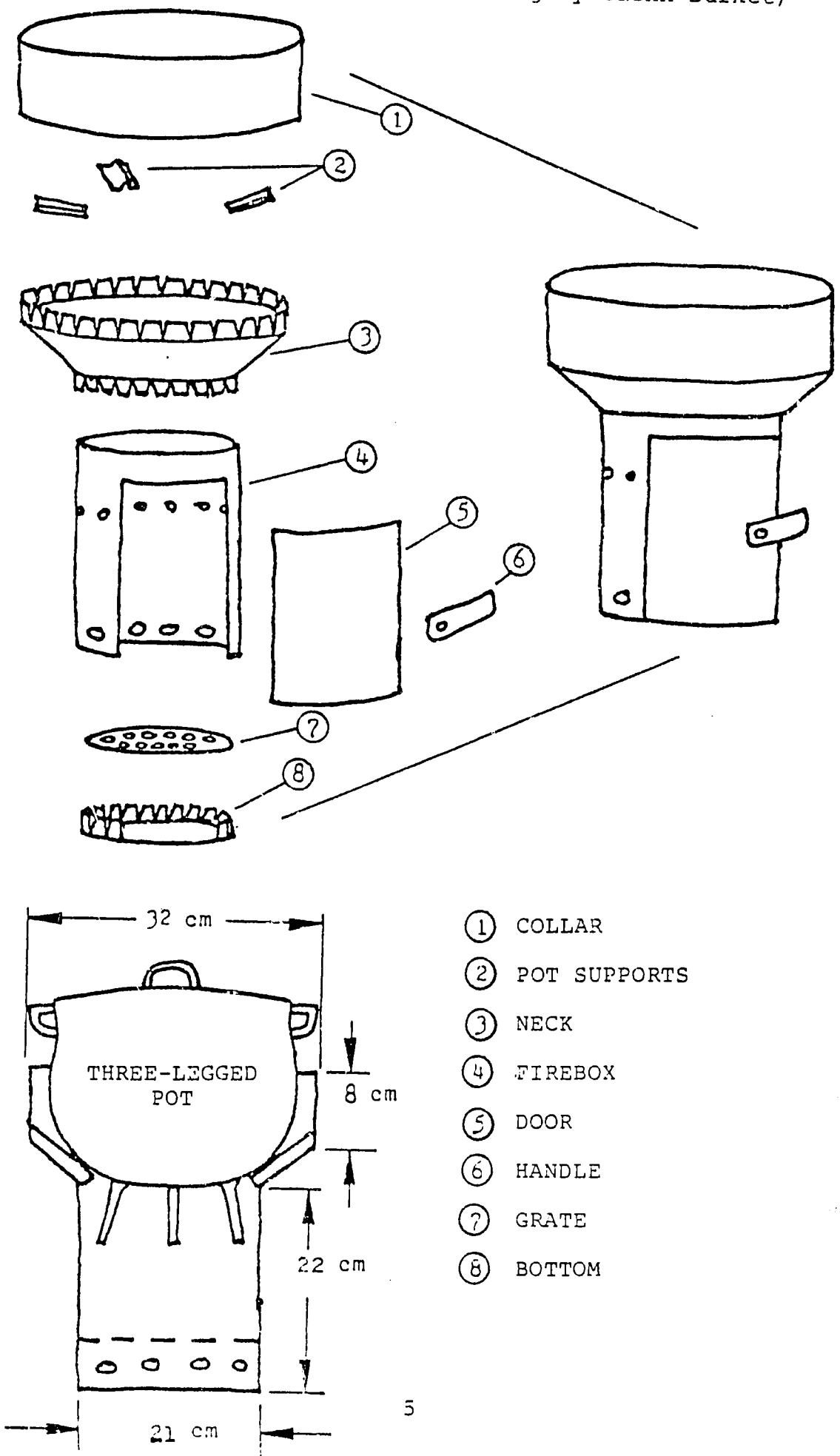

The following design criteria were used in developing experimental models:

- utilize materials available to indigenous tinsmiths and develop designs that they are capable of constructing;
- attempt to obtain high fuel efficiency by considering the principles of combustion and heat transfer;
- keep design as simple as possible and consistent with cultural conditions and preferences in rural households; and
- for experimental purposes, leave variable some parameters expected to be critical to performance.

The first criterion, for example, dictated using 0.5mm sheet metal, as it is easily cut by hand. The second led to a closed design, including features such as a grate, and sinking pots into the stove rather than resting them on top. The third criterion led to including a door with hinges that could be left open to accommodate the long pieces of wood villagers are accustomed to using, and to give off more light from the fire.

As expected, some conflicts arose between fuel-efficient stove design and the multiple functions of the traditional cooking fire. In particular, a closed metal stove is unlikely to provide the light or warmth desired during winter, especially if it has an insulating liner. However, we decided to proceed with a closed stove design in spite of these conflicts, as it is essential for consistently fuel-efficient cooking, without making special demands on the cook (Krishna Prasad 1983). The conflicts can be resoved in a number of ways: perhaps the stove will not be suitable during some months of the year; it may be possible to use alternative techniques for lighting and heating. Clearly, user testing and feedback are essential to determining how important these functions are to the acceptability of a closed stove.

B. Materials and Construction Techniques

Experimental portable metal stoves were constructed from materials which are readily available in Botswana, including 0.5mm sheet metal, 4.0mm wire, and rivets. The stoves were produced in a metal shop at the Rural Industries Innovation Centre (RIIC) in Kanye.

The sheet metal was cut primarily by hand using a tin snips, although at some stages a rotary shearing machine was used. A bending brake was used for pre-bending the seams, while an anvil and a hammer were used for pounding them down. A punch-type roller was used to make the cylindrical stove sections. A drill press or hand drill was used for drilling the holes, and a riveting gun was used for attaching most parts.

It was felt that even though local sheet metal workers do not have the machinery used to construct the experimental stoves, they would be able to make them using their own equipment and skills.

C. Models

The design of the Mod 1 experimental metal stove is shown in Figure 1. This stove can accommodate pot sizes 1, 2 and 3. The stove is a chimneyless design with the smoke released around the pot. The collar extends up alongside the pot to improve the contact between the hot gases and the pot. The neck section is sloped approximately 30° from horizontal. The three pot supports, each 2.5cm in height, are attached to the neck. This leaves a space between the pot and stove for the hot gases to escape. Since the neck and pot supports are sloped, larger pots sit higher in the stove than smaller pots. This results in the bottom of different pots resting at approximately the same height.

The firebox in the Mod 1 design has two sets of holes, one below the grate and the other above the grate (see Figure 1, no. 4), providing primary and secondary combustion air respectively. The holes can be completely closed by attaching circular bands to the stove body with screws. The Mod 1 design also has a provision for varying the height of the grate between three different levels. This permits testing the stove with either a distance of 12, 15 or 18cm between the lowest part of the pot (excluding the legs) and the grate. Three nuts and bolts placed through holes in the firebox wall serve as a grate support.

The Mod 1 experimental stove has a hinged door on the fuelwood opening. Metal plates can cover part of the opening at the top to keep the size of the fuel opening (above the grate) constant at 12 x 15cm regardless of the grate level. Holes in the grate take up about 25% of the overall grate area. The removable grate is included to improve air-fuel mixing which should lead to more complete combustion of the wood.

Variable features on the Mod 1 stove were included to perfect the design without constructing a new stove for each variation.

The design of the Mod 2 experimental stove is shown in Figure 2. Mod 2 is similar in design to Mod 1, except that it has an insulating liner or air space in the firebox and along the neck. This reduces heat loss through stove walls and should result in increased efficiency compared to Mod 1. An inner sheet metal wall in the firebox of the Mod 2 stove protects any insulating liner from damage by fuelwood or pot legs.

Insulating material can be packed between the walls. For the tests reported here, mud was used as the first insulating material.

Figure 2. Experimental Model 2 Stove
(Drawing by Glenn Burket)

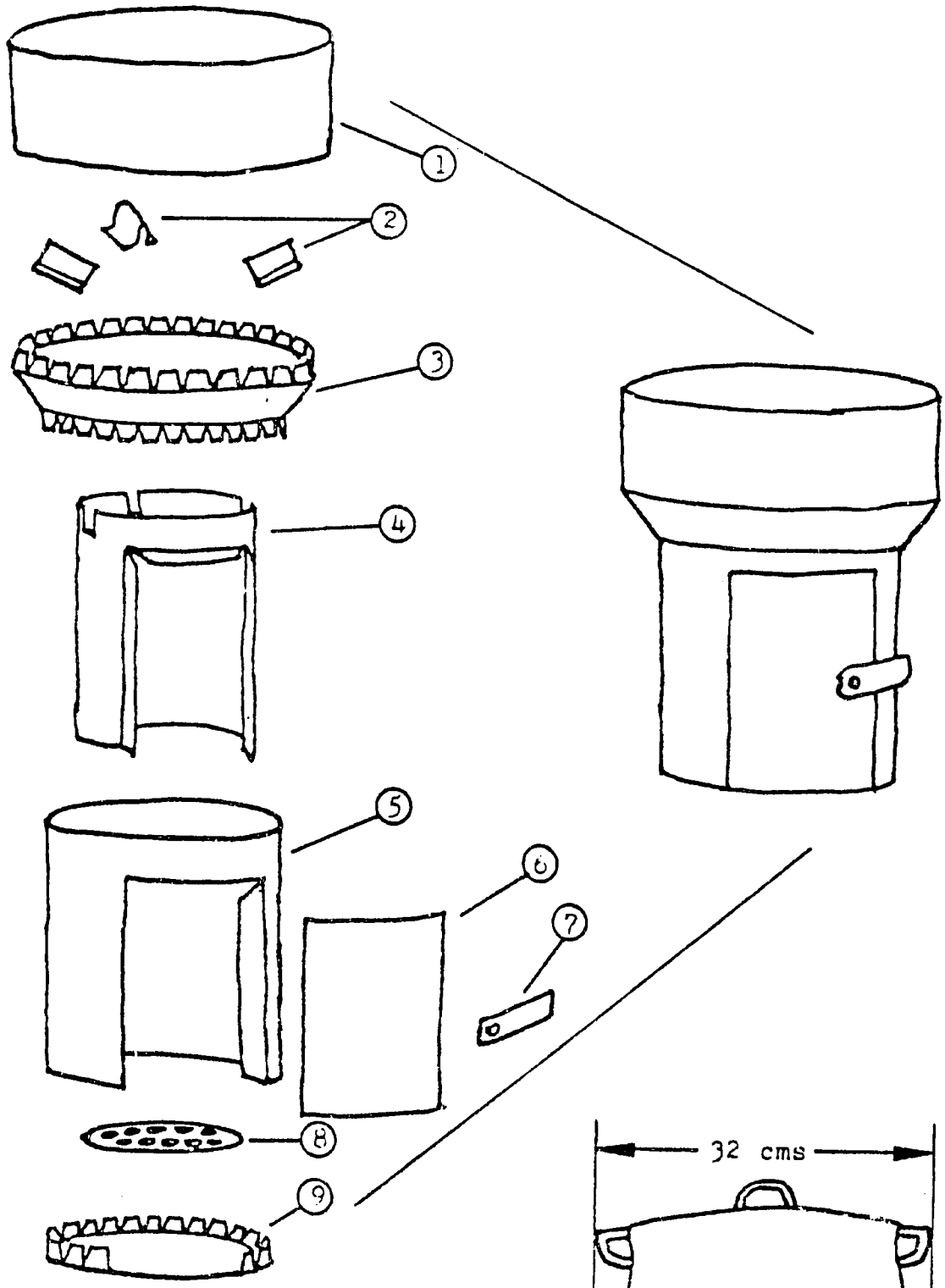

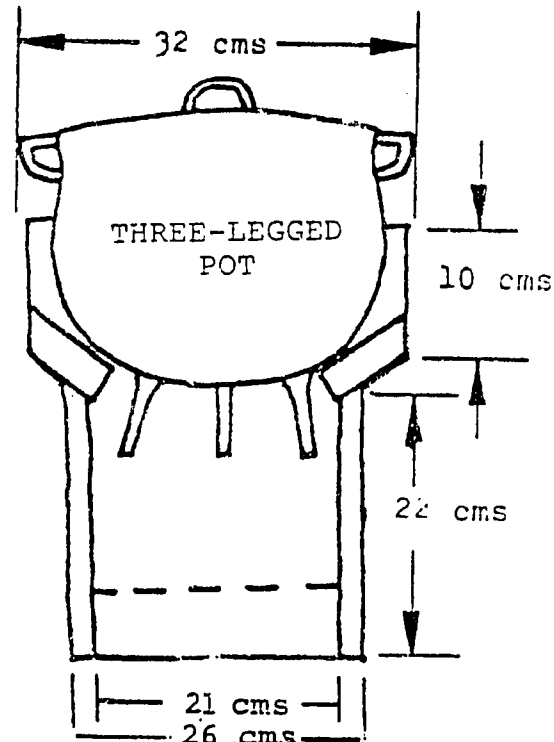

1. COLLAR
2. POT SUPPORTS
3. NECK
4. FIREBOX LINER
5. FIREBOX
6. DOOR
7. HANDLE
8. GRATE

A wet mix of red clay soil and sand yielded a very hard liner when dry. The second insulating material tested was a mud-vermiculite mixture, in the proportion 1 part mud, 4 parts vermiculite by volume. Vermiculite is an inexpensive insulating material available from South Africa and other countries. It is being used by RIIC to insulate solar water distillation units and solar ovens. Use of mud-vermiculite insulation in the Mod 2 stove reduces its weight to less than 6Kg compared to about 12Kg with plain mud.

The Mod 2 stove has only one position for the grate, with the distance from the grate to the lowest point on the bottom of the pot equal to about 16cm. Primary and secondary air holes are not included in the Mod 2 design; combustion air is supplied solely through door.

The third and final prototype metal stove (Figure 3) was completed after the first two models were thoroughly tested. The design of the Mod 3 stove is described in section VI following the test results.

Figure 3. Final Experimental Model 3 Stove
(Drawing by Glenn Burket)

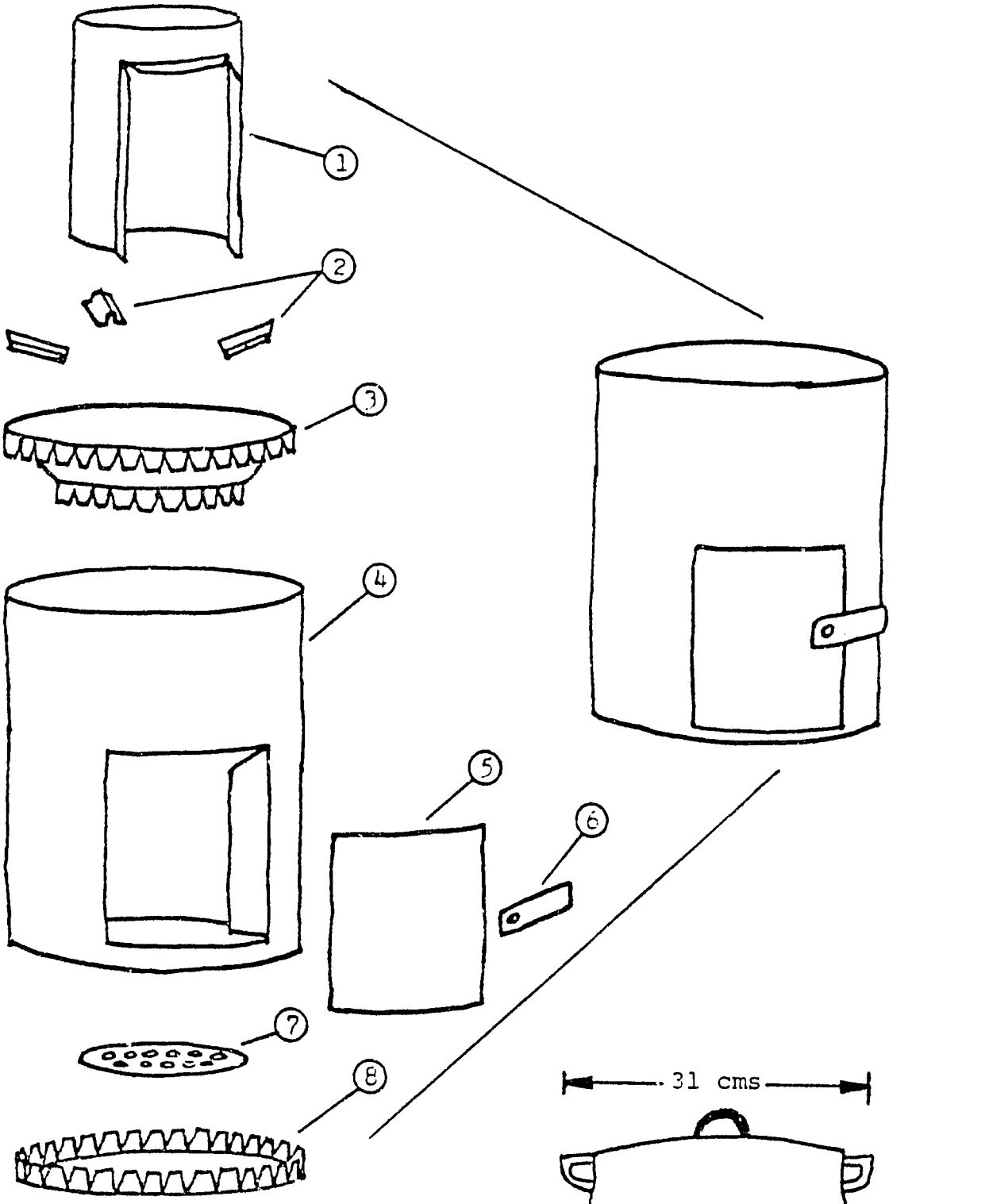

1. FIREBOX LINER
2. POT SUPPORTS
3. NECK
4. STOVE BODY
5. DOOR
6. HANDLE
7. GRATE
8. BOTTOM

III. MUD STOVES

In an effort to offer an alternative between existing practices and purchased cooking devices, a variety of mud cookstoves were built and tested. Some advantages of mud stoves are:

- they require little or no cash outlay;
- they can be constructed from readily available materials;
- construction skills needed are similar to those required for rondavel walls, which most women have experience building; and
- mud stove designs can be adapted to a variety of cooking styles, pot sizes, etc.

Thus, mud stoves designed for local conditions can be fully or largely owner-built with little or no monetary expenditure. All experimental mud stoves were built outdoors and it is expected that village women would do the same in the cooking area they now use.

A. Materials and Construction Techniques

The first mud stoves built by the BRET project made use of "Lorena" (a sand/clay or adobe mixture). Materials processing involves rubbing or pounding the sand and clay together until they are thoroughly mixed. The materials are kept relatively dry. This process is fairly easy in locations like Kanye where sandy soils already have a significant clay content. However, in locations closer to the Kalaghadi desert, such as Ditshegwane, clay and sand are not mixed naturally.

Once a proper sand/clay mixture (with about 15% clay) is prepared, the stove is built up in thin layers with each layer pounded into place. When the stove reaches the desired height, pot-holes, firebox, tunnels and other features are carved out with wetted spoons and knives.

After sampling soil from the pits women use for building material in Ditshegwane, none was found to contain enough binding material (clay) for sound stove construction. However, surface deposits of "seloko," a black clay material used to decorate rondavels, were found in the village. Although mixing seloko with sandy soil took several days and proved difficult, this material was used to build two stoves.

The other natural binding material available in Ditshegwane is "boloko," or cow dung. Several sources, including trainers who

conducted stove building sessions for BRET technicians warned that dung/soil mixtures do not hold up in mud stoves. However, successful stoves constructed of dung/soil mixes in Indonesia and other countries are mentioned in some cookstove reports (Joseph et al 1980). Also Howard Geller is familiar with dung/soil stoves constructed in India. Therefore, the final three stoves constructed in Ditshegwane were made with a dung/soil mixture.

To construct a dung/soil stove, a form is built from bricks, blocks, tin or wood to enclose the stove body. Batches of dung and soil are thoroughly mixed by hand adding enough water to knead the mixture. Consistency and dung content are about the same as in the blocks of rondavel walls. Kneaded balls of the mixture, about 10cm in diameter, are pounded into the form by hand, taking care to avoid forming layers which could weaken the stove or lead to cracking. The stove block is built up to the desired height and cured by keeping the top moist for one or two days until the entire mass has partially dried. The forms are then removed and the fire-box, pot openings, etc. carved out.

As expected, stove construction with the dung/soil mixture is much easier than with seloko and soil. The former required 20% or less labor and time than the latter. The dung/soil mix produces a very hard stove, without major cracks, which has not degraded with up to 10 firings.

Four substances were tested for use as protective coatings on the exterior of mud stoves, as they are built outdoors and degrade in rain. First, a coating of seloko slurry with a small amount of soil was tried. This coating failed to withstand rain. A coating of soil and cement held up reasonably well, as did a mixture of cement and local river sand. However, even these coatings were affected by rain in time, and cement coatings are difficult to repair. The last coating consisted of a dung/soil slurry, which can easily be repaired or replaced. If used along with a plastic sheet covering during the short rainy season, this coating should provide reasonable protection and increase stove life.

B. Designs

Four different mud stove designs were constructed and tested for experimental purposes. The designs were adapted from those found in various cookstoves publications.

Louga

This stove design, developed in Senegal, is documented in a number of publications (DeLepeleire et al 1981, Acott et al 1980). Large numbers of louga stoves (5,000 or more) have been constructed recently in Senegal (ITDG 1983). The basic louga design, shown in Figure 4, holds one pot and has three firebox entrances to allow for easy crossing of fuelwood. The flames and hot gases are

Figure 4. Louga Stove

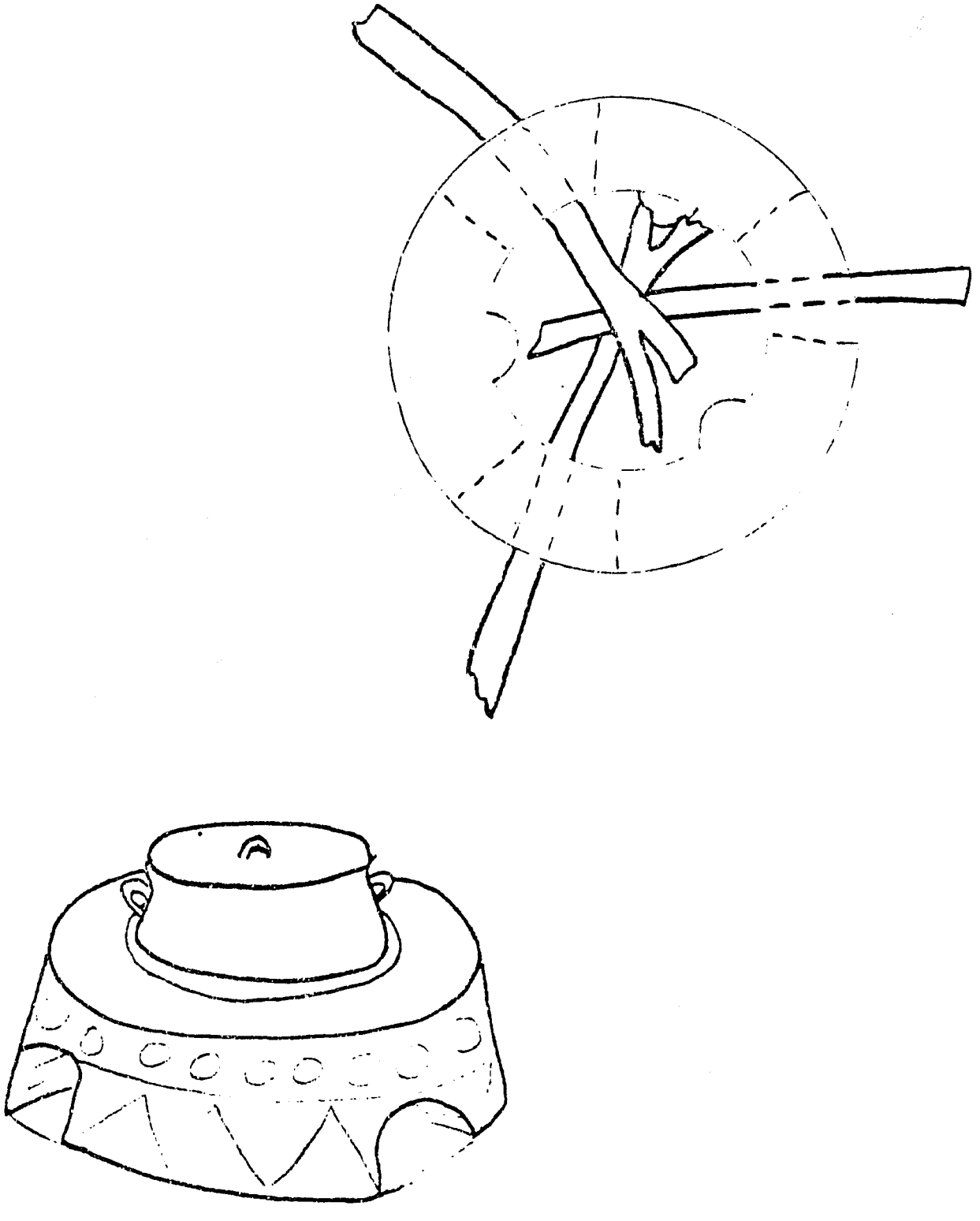

channelled up between the stove wall and the pot. The basic louga stove constructed for testing, at RIIC, Kanye, holds three-legged pots of sizes one and two. Because this stove simply surrounds the fire with a low mud wall and has no chimney, damper or tunnels, it represents the smallest departure from traditional cooking practices of the four designs constructed and tested.

A second experimental louga-type stove constructed in Ditshegwane holds both a size one or two pot and a "food tin" for water heating. The 3.7 litre food tin originally contains vegetable oil which is donated by AID organizations. Once the oil is used, people remove the tops and use the tins for heating water. The wide use of the tins in Ditshegwane prompted modifying the louga design to accommodate the tins. The modified louga design resembles a keyhole; therefore, it has been dubbed the keyhole stove.

Food Tin Stove

This stove, shown in Figure 5, is similar to the PRAI improved chula (stove) constructed and used in India (DeLepeleire et al 1981). The C-shaped stove has no front bridge since this is often the first section to crack from thermal stress and thermal cycling. Leaving the front open also provides easy access to the fire and high visibility. The food tin stove built in Ditshegwane accommodates size one or two pots on the main opening.

The food tin stove includes a passage from the firebox to a food tin for heating water. The stove has a short chimney built around the food tin to help draw hot gases to it. Smoke is released around the food tin.

Tungku Lowon

The Tungku Lowon mud stove design, shown in Figure 6, originates in Indonesia and has been widely tested there as well as in Sri Lanka (DeLepeleire et al 1981, Joseph et al 1980). This type of mud stove is being widely disseminated in refugee camps in Somalia (Cauley 1982).

As shown in Figure 6, the experimental Tungku Lowon stoves have two levels, with the firebox and one pot-hole located in the lower front level. A tunnel leads from the firebox to the second pot-hole in the higher rear level. The hot combustion gases are released around this pot. The height differential helps the stove draw air and burn properly.

Two Tungku Lowon stoves were built and tested. The first, made from a sand/clay mix in Kanye, includes a damper which drops down through the front bridge. The second, made from a dung/soil mix in Ditshegwane, has a drop-down damper between the two pot-holes. The second stove also has a slightly longer fuelwood opening and longer passage between the pot-holes. Both stoves hold size one or two pots in either of the pot-holes.

Figure 5. C-Shaped Stove with Food Tin Water Heater

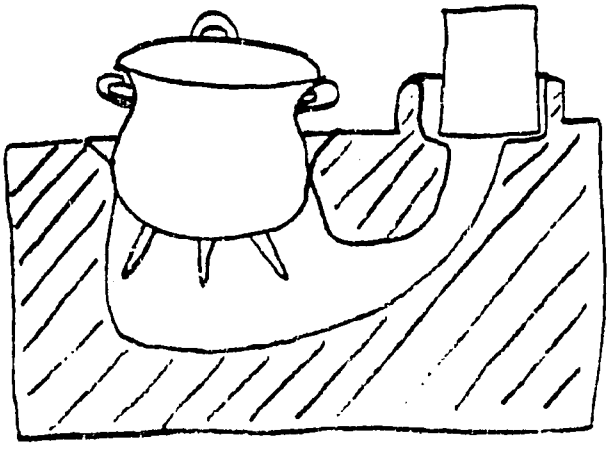

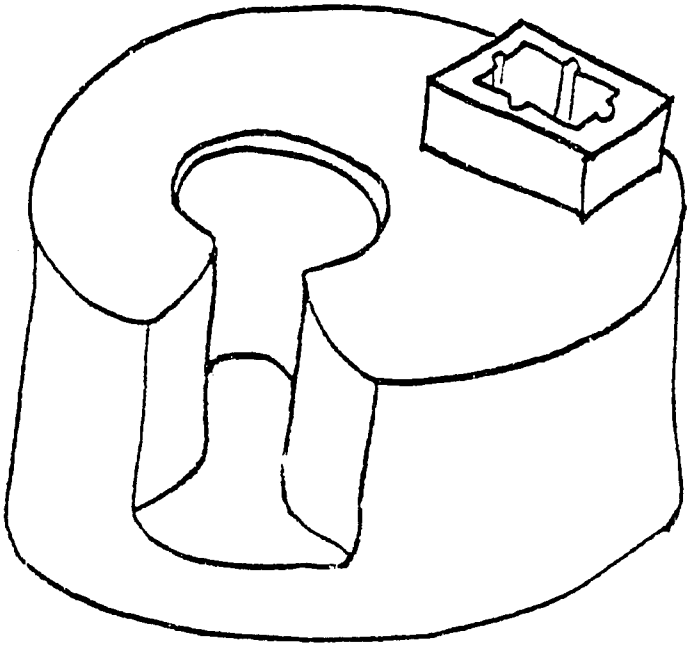

Figure 6. Tungku Lowon Stove

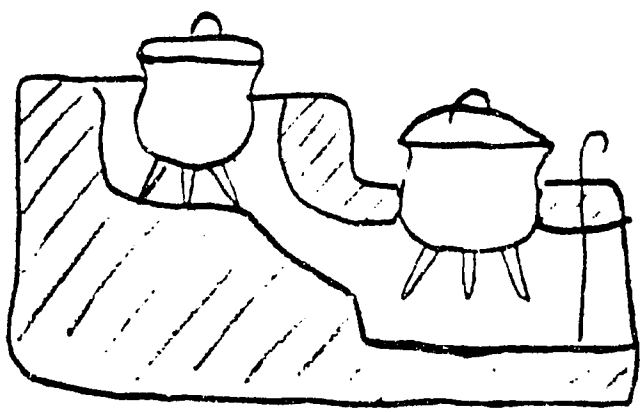

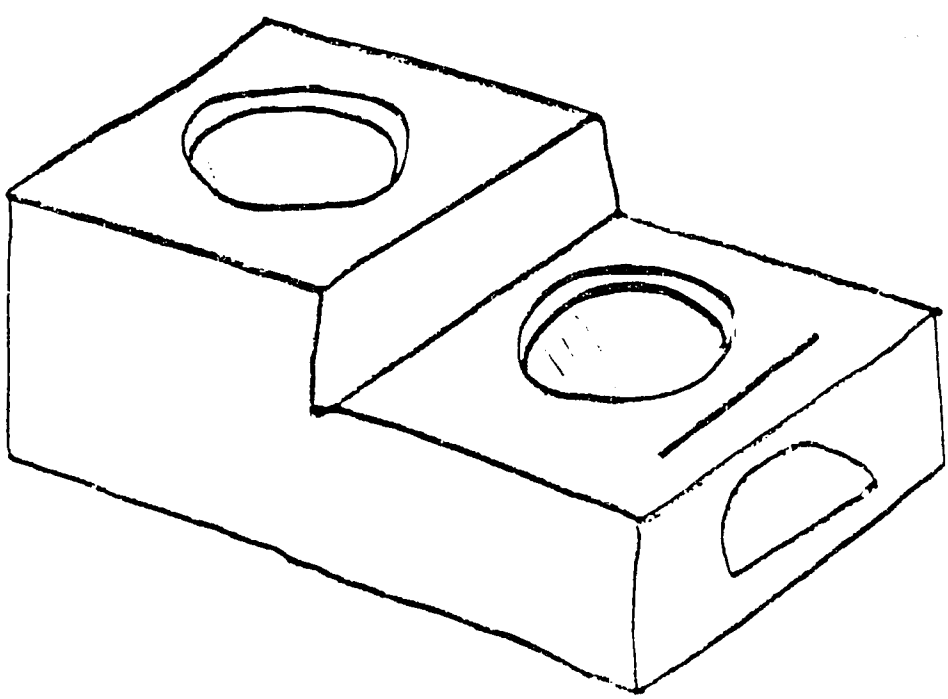

Two Pot-Hole, Low Chimney Stove

This design (not shown) is a two-pot stove like the Tungku Lowon except that the smoke is channelled from the second pot opening to a low chimney made of mud. Stoves of similar design but often with more than two pot openings were built previously by workers at RIIC (Nkwe 1980). A modest dissemination effort was carried out by RIIC without much success. The experimental stove accommodates size one or two pots and has a drop-down damper to regulate gas flow.

IV. TESTING METHODOLOGY

In a broad context, stove tests were undertaken to develop prototype stove designs which could be "taken to the people" with knowledge of their fuel efficiency, time savings, ease of operation, etc. relative to the existing cooking situation, and with some confidence that the stove would perform well. More specifically, tests reported here were used to analyze technical performance and ease of operation of experimental cookstoves. Major design features, such as use of a grate or position of a grate in the stove, were evaluated in a systematic, controlled manner.

Tests conducted in this stage were water boiling (WB) tests. A WB test is a simple experiment in which fuel and the time needed to do a simulated cooking task are measured along with other relevant variables. Use of water alone expedites the tests and eliminates the cost of food, which could be significant for a comprehensive series of cooking tests. Furthermore, it is easy to determine how much energy has been transferred to the water in a simulation test and more difficult to determine how much energy has been usefully transferred to food and cooking medium during actual cooking (Geller 1982). Water boiling tests also facilitate the standardization of variables, such as pots used and task performed.

A. Procedure

The WB test method follows the provisional international cookstove testing standards (VITA 1982). The WB test is carried out in two parts: a "high-power" phase and a "low-power" phase. The high-power phase simulates short, high-output cooking tasks, such as frying, rapid water heating, or vigorous boiling; the low-power phase simulates longer, low-heat output cooking tasks, such as simmering.

In preparation for the test, notes are taken on the location, weather conditions, pot(s) used, person conducting the test, and any other information that may affect the test results. Each of the authors conducted some of the tests reported here, using six different pots (sizes 1, 2 or 3).

At the start of the test, pots are filled two-thirds with tap water. Initial measurements are taken of the weight and the temperature of the water in each pot, and the weight of wood set aside for the test, including kindling. (A test data sheet is included as Appendix A.) Dry grass or paper is used to ignite the fire, and timing begins when the fire is established and pots are put on the stove, usually one to two minutes after lighting.

During the high-power phase, the water in the main pot is brought to a boil as quickly as possible. Fuel is added to the fire as needed. The water temperature is measured and recorded every three minutes until boiling is reached and the fuel charges are noted. This is useful for maintaining a high fire and for evaluating the ease of operation. When boiling begins, a high fire and a roiling boil are maintained for an additional 15 minutes to complete the high-power phase.

When the high-power phase is over, the time is noted and intermediate measurements are taken. These consist of the weight and temperature of water in each pot, the weight of remaining wood, and the weight of hot charcoal in the stove. Charcoal, wood and pot(s) are then returned to the stove (or open fire). The low-power phase is begun once the fire is ignited again. The time required for the intermediate measurements and relighting is typically five minutes.

For the low-power phase, the water in the pot on the main opening is kept simmering (at a low boil) for one hour. The operator attempts to use as little wood as possible. If for some reason the temperature in the main pot drops 5°C below the boiling point, the test is discontinued. After one hour, all the measurements are made again and the test is completed. Comments or observations (e.g., position of a damper or firebox door) are noted during the test.

Fuel used for most of the tests comes from large, dead branches, generally 1.0 to 1.5m in length, purchased in Kanye. It was cut into lengths of 30cm or less, in general, and split to about 5 square cm or less. The predominant species is "moselesele," which is also the most preferred in Ditshegwane, according to the BRET survey. Moselesele gathered in Ditshegwane was used for about a quarter of the tests.

B. Calculations for Individual Tests

After a water boiling test is carried out, various test-specific calculations are completed. Some of the calculations are included on the test form in Appendix A.

One of the main parameters which is calculated for both phases of the test is the "equivalent dry wood consumed" (EDWC). The calculation of EDWC involves normalizing wood consumption for moisture in the fuel and charcoal remaining at the end of each phase. EDWC is given by:

$$EDWC = A(1-a) - 1.5B \qquad (1)$$

where "A" is the mass of wood consumed, "a" is the moisture content of the wood on a wet basis, and "B" is the mass of charcoal residue. The factor 1.5 is approximately the ratio of the calorific values of charcoal and dry wood.

For the moisture content of wood on a wet basis, 10% is assumed. This value is based on the use of air dry wood and the low relative humidity throughout the tests. Some fuelwood samples were dried in an oven and the actual moisture content turned out to be only about 7%. However, the assumption of 10% moisture was maintained for all of the tests since the two values are close, and since changing the moisture content would not affect the relative efficiencies between different tests.

Average power rates, calculated in terms of the EDWC per hour, are computed for both the high and low power phases. In addition, a quantity known as the power ratio is computed. The power ratio is given by the power rate for the high-power phase divided by that for the low-power phase. The power ratio indicates the variability in burning rates or heat outputs available from a stove or open fire for the two tasks specified in the WB test.

Another parameter which is calculated for each phase of a test is the standard specific consumption (SSC). This is simply the equivalent dry wood consumed divided by the mass of water vaporized. SSC, which is inversely proportional to the fuel efficiency, indicates how much wood is needed to evaporate a unit of water during each phase of the test.

For each test, an overall fuel efficiency, generally known as the "percent heat utilized" (PHU), is calculated (Geller and Dutt 1983, Joseph and Shanahan 1980). PHU is defined as the energy utilized for heating up water and evaporating water divided by the fuel energy consumed. The PHU for a test is given by:

$$PHU = \frac{\frac{4.184\ KJ}{Kg \cdot {}^{\circ}C} \cdot M_w \cdot \Delta T_w + M_{ev} \cdot L}{M_f \cdot 20{,}000\ \frac{KJ}{Kg} \cdot (1-a) - M_c \cdot 29{,}000\ \frac{KJ}{Kg}} \qquad (2)$$

where 4.184 KJ/Kg.°C is the specific heat of water, M_w is the initial mass of water in the pot(s), ΔT_w is the temperature rise of the water, M_{ev} is the mass of water evaporated and L is the latent heat of evaporation, 2260 KJ/Kg. In the denominator of equation (2), M_f is the mass of fuel consumed, 20,000 KJ/Kg is the assumed calorific value of dry wood (Geller and Dutt 1983)," a" again is the moisture content of the wood on a wet basis, M_c is the mass of charcoal remaining in the stove at the end of the test, and 29,000 KJ/Kg is the assumed calorific value of the charcoal residue. If more than one pot is used in a WB test, the water heating and evaporation energy for each pot are added together in the calculation of PHU (likewise for the food tin in mud stoves which include a food tin water heater).

There is some debate over whether to consider the energy used for water evaporation as useful energy in cookstove efficiency tests (Geller and Dutt 1983, VITA 1982). During cooking, water evaporation

is most appropriately considered an energy loss. However, for WB tests, the objective is to assess how much energy has been transferred to the water during the simulation test. Therefore, it is logical to take credit for the energy utilized for water evaporation and this is reflected in the formula for PHU. Of course, the intention during the low-power phase is to barely maintain a boil and thus minimize the water evaporation.

C. Calculations for Series of Tests

In order to draw conclusions about a particular cookstove and to compare different stoves, some basic statistical analyses are carried out using the data from one or more series of tests. The arithmetic mean or average is the most basic calculation from a series of measurements of the same parameter. The average is simply the sum of all individual measurements divided by the number of measurements N.

In order to characterize the variability between measurements, the standard deviation S is calculated.

$$S = \left[\frac{1}{N-1} \sum_{i=1}^{N} (X_i - \bar{X})^2 \right]^{\frac{1}{2}} \qquad (3)$$

where the summation is over all individual measurements of the parameter X and $\bar{X}$ is the average value. The standard deviation divided by the mean is a normalized measure of variability between different tests known as the coefficient of variation (COV).

The 95% confidence interval can be computed (assuming normally distributed data) from the mean and standard deviation for a series of measurements. The 95% confidence interval is the range bounded by the mean minus two standard deviations and the mean plus two standard deviations, or $\bar{X} \pm 2S$. Any measurement of the parameter X has a 95% probability of falling in this range.

The statistical calculations presented so far apply to a number of tests with the same cooking device or system. In order to compare the fuel efficiency or some other parameter for two different stoves or two variations of the same stove, a "t-test" can be carried out. The t-test is used to determine whether the parameter, such as efficiency, is significantly different for the two stoves or variations, and our confidence in that the observed difference did not occur by chance.

The t-test involves calculating the t value,

$$t = \frac{\bar{X}_1 - \bar{X}_2}{\left[\frac{S_1^2}{N_1} + \frac{S_2^2}{N_2} \right]^{\frac{1}{2}}} \qquad (4)$$

where $\bar{X}_1$, S_1 and N_1 are the mean, standard deviation and number of measurements for one stove or cooking situation and $\bar{X}_2$, S_2 and N_2 are the same values for the second stove or situation.

The "degrees of freedom" must also be calculated as part of the t-test. In this case, the degrees of freedom is equal to $N_1 + N_2 - 2$ since two independent parameters ($\bar{X}_1$ and $\bar{X}_2$) are estimated from the measurements.

To complete the t-test, the computed t value is compared to the values in a t-table at the appropriate degrees of freedom. An abridged t-table is included as Appendix B. It can be said that the mean from one group of tests is greater than the mean from the other at a certain level of significance if the computed t-value is greater than the number in the table at that level. The level of significance is the percentage probability that the result (i.e., the difference in means) has been observed by chance and that there is no real difference in the parameter for the two situations. The levels of significance shown in the t-table range from 0.5-10%. A level of significance of 5% or less indicates that the observed difference in means can be accepted with a high degree of confidence.

V. RESULTS

The principal results for each of the 63 valid water boiling tests are listed in Appendix C. The tests are grouped together by stove type and key features such as presence of a grate, grate position, or pot size.

A. Metal Stoves

Table 1 shows the efficiency (PHU) results for the one-pot open fire and eleven groups of tests with the metal stoves. For each group of tests, the average efficiency ($\overline{PHU}$), number of tests (N), standard deviation (S), coefficient of variation (COV), and 95% confidence interval are given.

It is seen from Table 1 that all of the tests with the Mod 1 stove yielded an average efficiency of 16.7% compared to 9.1% for the one-pot open fire. The 84% increase in efficiency with the stove is statistically significant at better than the 0.5% level. The average efficiency for the Mod 2 stove in all tests using the same size pots as were tested on the open fire (sizes two and three) is 20.3%. This corresponds to a 123% increase from the open fire, a difference which is also highly significant statistically.

The 22% increase in efficiency for the experimental stove with the insulating liner (Mod 2) on average compared to the unlined stove (Mod 1) is also significant at the 0.5% level. There is no significant difference in the efficiency of the Mod 2 stove on a statistical basis when comparing the two lining materials. The failure to realize an increased efficiency with the mud/vermiculite mixture compared to plain mud may be due to the fact that the mud/vermiculite is packed into the space between the stove walls.

Regarding the analysis of the various grate levels with the Mod 1 design, Table 1 shows that the average efficiency increases from 15.3% to 16.3% and then to 18.1% as the grate level is raised from the low to middle and then to the high positions. The difference between the values for the low and high positions is significant at the 2.5% level while the difference in the average PHU between the middle and high positions is not statistically significant.

Most of the tests with the Mod 1 stove were conducted with the bottom (primary) air holes open and the secondary air holes closed. However, closing all of the holes with the high grate resulted in only a slight (5%) drop in average efficiency. The two cases are not significantly different. The Mod 1 stove has not been tested with the secondary air holes open. Combustion

Table 1

Metal Stove and Open Fire Efficiency Results

Stove or open fire type	Pot size(s)	N	$\overline{PHU}$ (%)	S (%)	COV (%)	95% confidence interval
One-pot open fire	2,3	5	9.1	3.4	37	2.3 - 15.9
Mod 1 - low grate	2	3	15.3	1.4	9	12.5 - 18.1
Mod 1 - middle grate	2	3	16.3	2.8	17	10.7 - 21.9
Mod 1 - high grate	2	3	18.1	0.4	2	17.3 - 18.9
Mod 1 - holes closed, high grate	2,3	2	17.1	1.4	8	14.3 - 19.9
Mod 1 - all tests	2,3	11	16.7	1.9	11	12.9 - 20.5
Mod 2 - mud liner	1	3	15.2	3.3	22	8.6 - 21.8
Mod 2 - mud liner	2	4	19.9	2.6	13	14.7 - 25.1
Mod 2 - mud liner	3	5	20.8	1.6	7	17.6 - 24.0
Mod 2 - mud/ vermiculite liner	2,3	4	20.0	3.1	16	13.8 - 26.2
Mod 2 - all tests w/ sizes 2 and 3 pots	2,3	13	20.3	2.3	11	15.7 - 24.9
Mod 3 - mud/ vermiculite liner	2,3	3	21.3	3.2	15	14.9 - 27.7

appears to be good with air entering solely through the door or through the door and bottom air holes, so the need for additional combustion air is doubtful.

Table 1 also shows the pot size comparison carried out on the Mod 2 stove with mud liner. It is seen that the average efficiency is 15.2% with the size 1 pot, 19.9% with the size 2 pot, and 20.8% with the size 3 pot. This result is logical since larger pots provide more surface area for heat transfer into the pot. Also, there is a narrower gap between the pot and stove walls through which the flames and hot gases escape from the stove with larger pots. The gap between the pot and the stove wall at the top of the stove is 6cm with the size 1 pot, 3.5cm with the size 2 pot, and 2cm with the size 3 pot. As shown in Table 1, the average efficiency with the size 1 pot is still 67% greater than that of the open fire. These results show that high fuel efficiencies are not sacrificed by having a versatile design.

Separate series of tests were done on the Mod 2 stove with (1) the door kept completely open during the course of the test; and (2) grates varying between 12% and 22% hole area. The data comparing these different conditions is contained in Appendix C. Neither keeping the door open nor varying the grate hole area resulted in a significant change in the efficiency of the Mod 2 stove. The former result implies that use of the stove with longer pieces of wood, thereby forcing the door to remain open, should not adversely affect its performance.

The final experimental design (Mod 3) was briefly tested to ensure that it provides a high efficiency. With mud/vermiculite insulation, an average efficiency of 21.3% was obtained--134% greater than the average efficiency of the open fire. The Mod 3 stove does not, however, have a statistically different efficiency than the equivalent Mod 2 stove.

It is worth noting how the degree of variability in efficiency between different trials compares for the open fire and the metal stoves. Table 1 shows that the coefficient of variation (COV) for the one-pot open fire tests equals 37% while the COV is only 11% for either the Mod 1 or Mod 2 stove including all tests with pot sizes 2 and 3. The highest COV for any of the metal stove situations is 22%. It is assumed that this result is due to the stoves reducing the influence of environmental factors such as wind speed and operational factors such as level of fire tending.

Table 2 shows the major time and power ratio results for the open fire and the three metal stove designs. It is seen that the time for the high-power phase is reduced 22-33% on average with the stoves. These differences are statistically significant at the 5% level or better. In terms of the time required to bring the 3 or 4.5 litres of water (depending on pot size) to a boil, the open fire required 40 minutes on average while the Mod 1 stove used just 22 minutes and the Mod 3 stove 28 minutes on average.

Table 2

Metal Stove and Open Fire Time and Power Ratio Results

Stove or open fire type	Average time for high-power phase (min.)	S for time (min.)	Average Power Ratio	S for Power Ratio
One-pot open fire	55	12.3	1.38	0.35
Mod 1 - all tests	37	5.8	1.72	0.38
Mod 2 - all tests w/ sizes 2 and 3 pots	41	3.7	1.75	0.30
Mod 3	43	2.9	1.78	0.40

The somewhat greater time for the Mod 3 stove compared to the Mod 1 stove, statistically significant at the 2.5% level, may be due in part to the time required for heating up the stove liner. Also, the additional combustion air supplied through the holes in the Mod 1 stove in most of the tests may reduce the boiling time. The latter explanation is confirmed by the fact that the time to boil averaged 27 minutes in the tests of the Mod 1 stove with the primary air holes closed. Thus, while including air holes in the stove body does not significantly increase the fuel efficiency, it does slightly reduce the cooking time.

Table 2 also shows that the average power ratio increases 22-29% for the metal stoves in comparison with the open fire. The difference is statistically significant at the 5% or 10% level depending on the stove type. Hence, the metal stoves provide a slightly higher range of power outputs as indicated by the fuel energy consumed per unit of time for each of the tasks performed in the WB test.

Mud Stoves

Table 3 shows the efficiency results for the two open fire cases and the different mud stoves tested. It is seen that the louga stove without a grate has an average efficiency of 13.2% compared to 9.1% for the one-pot open fire. This 45% increase is significant at the 5% level.

The average efficiency increased to 15.4% when a grate was added to the same louga stove. This is 69% higher than the efficiency of the one-pot open fire with the rise significant at the 5% level. However, the 17% increase in efficiency when the grate is added to the louga stove is not statistically significant partly because there was a relatively high level of variation in the three tests with a grate. Performing further tests with the grate may reduce the COV and result in statistical significance.

The louga stove with water heater has an average efficiency of 20.1%, 121% higher than the one-pot open fire and 60% higher than the two-pot open fire. These increases are highly significant statistically. Compared to the ordinary louga stove (no grate or water heater), the model with the grate and water heater is 52% more efficient. This difference is significant at the 2.5% level based on the limited tests performed. If the energy absorbed by the food tin water heater is ignored, the stove with grate in Ditshegwane would have an average efficiency of 16.7%.

The "food tin" mud stove with built-in water heater has an average efficiency of 19.5% when the energy absorbed in the water heater is included as useful energy. This is 55% greater than the two-pot open fire (significant at the 5% level) and 114% greater than the one-pot open fire (significant at the 0.5% level).

Table 3

Mud Stove and Open Fire Efficiency Results

Stove or open fire type	Pot size(s)	N	$\overline{PHU}$ (%)	S (%)	COV (%)	95% confidence interval (%)
One-pot open fire	2,3	5	9.1	3.4	37	2.3 - 15.9
Two-pot open fire	1,2	4	12.6	4.3	24	10.1 - 28.9
Louga - Kanye, no grate	2	3	13.2	1.7	13	9.8 - 16.6
Louga - Kanye, with grate	2	3	15.4	3.9	25	7.6 - 19.3
Louga - Ditshegwane, w/ grate and water heater	2	3	20.1	3.4	17	13.3 - 26.9
Stove with food tin water heater	2	4	19.5	4.7	24	10.1 - 28.9
Tungku Lowon - Kanye, no grate	1,2	3	17.2	1.7	10	13.8 - 20.6
Tungku Lowon - Ditshegwane, no grate	1,2	3	13.3	1.8	14	9.7 - 16.9
Tungku Lowon - Ditshegwane, with grate	1,2	2	18.6	1.6	9	15.4 - 21.8
Two-pot with chimney and grate	1,2	3	16.9	3.1	18	10.7 - 23.1

The Tungku Lowon design mud stoves have given more mixed results. The model built in Kanye without a grate has an average efficiency of 17.2% while the model in Ditshegwane has an average efficiency of only 13.3% without a grate. This is not statistically different from the two-pot open fire. While a modest increase in efficiency over the open fire (36% for the Kanye stove) is clearly possible, these results show that design details may be critical to good fuel economy. It is suspected that the slightly longer passages in the Ditshegwane stove along with its orientation perpendicular to the wind are responsible for its poorer performance. Adding a grate to the model in Ditshegwane raised its efficiency to a respectable 18.6%--a 48% increase over the two-pot open fire. The increase in efficiency resulting from the addition of the grate is significant at the 2.5% level.

The two-pot mud stove with the short chimney showed an average efficiency of 16.9%. While this is 34% greater than the efficiency of the two-pot open fire, the difference is only significant at the 10% level. The two-pot mud stove with chimney and grate does not appear to perform as efficiently as either the Tungku Lowon with grate, louga with grate and water heater, or the C-shaped stove with water heater. This is consistent with experiments in India showing that the addition of a chimney to mud stoves can induce a draft which, if not carefully controlled, can lead to poor heat transfer to the pots (Geller 1983). Also, the use of a flue and chimney limits the surface area of the pots exposed to the hot combustion gases.

Table 3 also shows that like the metal stoves, the mud stoves generally show a much lower coefficient of variation between tests than the open fire.

The time for high-power phase and power ratio results for the mud stoves and open fires are presented in Table 4. Table 4 only contains averages and standard deviations for each stove--other statistical parameters can be calculated from these values.

The louga stove required 20-36% less time for the high-power phase than the one-pot fire. The time savings increases when a grate is used. Compared to the two-pot open fire, the C-shaped stove with food tin water heater takes 12% less time. The food tin water heater stove took an average of only 20 minutes to bring three litres of water in a pot to a boil.

The Tungku Lowon stoves without grates, however, required 50-56 minutes on the average to complete the high power phase. This is at least 25% longer than the average time for the two-pot open fire. The increase in time is attributed to poor draft, difficulty in establishing a strong fire initially, and the inability to obtain a high-power output with the Tungku Lowon stoves as tested. For example, the overall fuel consumption rate (indicative of the power output) for the high-power phase averages 0.86Kg/hr in the Tungku Lowon stoves without grates compared to 1.55Kg/hr in the two-pot open fire. Adding a grate to the Tungku

Table 4

Mud Stove and Open Fire Time and Power Ratio Results

Stove or open fire type	Average time for high-power phase (min.)	S for time (min.)	Average Power Ratio	S for Power Ratio
One-pot open fire	55	12.3	1.38	0.35
Two-pot open fire	40	4.8	1.68	0.85
Louga - Kanye, no grate	43	6.7	2.84	2.15
Louga - Kanye, with grate	38	3.1	1.73	0.33
Louga - Ditshegwane, with grate and water heater	35	5.5	2.36	0.41
Stove with food tin water heater	35	1.7	3.11	1.68
Tungku Lowon - Kanye, no grate	50	7.0	1.38	0.14
Tungku Lowon - Ditshegwane, no grate	56	6.7	1.77	0.32
Tungku Lowon - Ditshegwane, with grate	44	6.4	1.30	0.27
Two-pot with chimney and grate	48	2.6	1.86	0.52

Lowon stove reduces the time required for the high-power phase by 21% on average. This difference is significant at the 10% level. The results in Table 4 clearly show that a grate reduces the time required to bring water to a boil.

Table 4 also shows that the power ratio for mud stoves is generally greater that that of open fires. This is attributed to the stove mass retaining heat and keeping a simmer in the pots during the low-power phase, with relatively little fuel burned. However, there is a high degree of variability in the power ratio, both within and between series of tests. What is more, the power ratio for the Tungku Lowon tends to be lower than that of other mud stoves. No explanation for these results is apparent.

VI. DISCUSSION AND CONCLUSIONS

The cookstove construction and WB testing activities reported here lead to a variety of conclusions and plans for the near future. Conclusions are grouped in terms of general findings, mud and metal stoves together, metal stoves alone, and mud stoves alone.

A. General Findings

First, it is worth noting that the 63 WB tests gave reasonable results. Many of the expectations regarding stove performance were confirmed and quantified. In particular, the cookstoves with one exception were more efficient than the open fire on a statistical basis. Situations where a higher efficiency was expected--for example, when an insulating liner was added to the firebox of the metal stove--generally turned out as anticipated. Furthermore, in tests where there were definite problems such as difficulty in igniting the fire or maintaining a high-power output during the high power phase, relatively poor efficiencies usually resulted.

The WB tests also proved to be useful for evaluating different design features and stove dimensions in the case of the metal stoves. Based in part on these tests, a final experimental metal stove was constructed which proved to be over twice as efficient as the one-pot open fire.

The t-test statistical analysis was used to indicate whether or not the observed differences in average efficiency, time, and power ratio occurred by chance, and the statistical confidence in the results. In many cases, good statistical significance was obtained even though relatively few tests were carried out.

B. Metal versus Mud Stoves

The metal stoves overall proved to be somewhat more efficient than the mud stoves. In general, the metal stoves reached about twice the efficiency of the open fire. Therefore, the predicted wood savings with the metal stoves during actual cooking is on the order of 50%. The mud stoves in general showed about a 50% increase in efficiency compared to open fires with the equivalent number of pots. Based on these results, the mud stoves are expected to provide approximately a 1/3 wood savings during cooking.

Other factors besides fuel efficiency, such as attractiveness or cost, could play an important role in how the stoves are received. Only time will tell whether either or both stove approaches are suited to the needs and resources of a substantial number of people in Botswana, and whether production and dissemination capabilities can satisfy whatever demand might exist. While the question of cookstove acceptance is ultimately in the hands of the local populace, steps can be taken to increase the likelihood

of acceptance. In the next few stages of this cookstove program, the intentions are to work with villagers and potential stove producers to evolve both metal and mud stoves in a technically sound manner, responsive to people's needs and opinions.

The next phase of the program will consist of actual cooking by village women under controlled conditions (VITA 1982). As planned, each woman will try out the Mod 3 prototype stove and either the C-shaped mud stove with water heater or one of the other mud stoves with a grate. Cooking will be monitored on both the stoves and the open fire. This will be done in part to determine if the fuel savings predicted from the WB tests are realized during cooking. Also, the cooking tests should give the villagers a chance to react to the prototype designs once they have used them, and reveal how easy it is for the women to use the stoves.

C. Metal Stoves

By enclosing the fire, burning fuel on a grate to improve air/fuel mixing and combustion, directing the flames and hot gases to the pot, and promoting heat transfer through contact between the hot gases and the pot, an 84% increase in the average efficienc relative to the open fire was obtained with the first metal stove. The efficiency increased an additional 22% on average when the firebox was insulated with 2.5cm of dry mud. Both of these differences are highly significant statistically (at the 0.5% level). The final metal stove design was 134% more efficient than the open fire.

While mud insulation is ideal in terms of cost and availability it is heavy and, hence, and undesirable insulating material. One source claims that sandy clay soil with 15% moisture content has a conductivity of 0.9W/m°C (Ingersoll et al 1948), while the conductivity of common brick is approximately 0.7W/m°C (Holman 1976). These values are about 20 times greater than the conductivity of common insulating materials such as rock wool or fiberglass.

In order to reduce the weight of an insulated stove and further cut down on the heat loss through the stove body, other lining materials may be preferable. One such material is cow dung, also freely available. Straw and other fibrous material in the dung provide air spaces which should lower the weight and conductivity compared to mud. Alternatively, simply leaving air between the two walls of firebox may be acceptable. In fact, a 4.0cm-thick air space will have a conductivity of only about 0.14W/m°C, assuming an inner wall temperature of 600°C. (See Appendix D.)

The final prototype metal stove, as shown in Figure 3, features an outer wall made from a single piece of metal, rather than a separate body and collar as was done with the first two

models. This makes stove construction simpler and easier. The distance between the two walls is 4.0cm. Based on results from the grate height analysis, the distance from grate to bottom of the pot, excluding legs, has been set at 12cm. Small holes in the door help provide air when the door is closed.

One observation in the tests on the first metal stoves showed the grate deteriorated first. This finding is consistent with experience in Kenya, where sheet metal, charcoal-burning stoves (jikos) are widely used (Kinyanjui 1983). Due to high temperatures on the grate and thermal cycling, 0.5mm grates began to bend and corrode after about 10 firings. Therefore, the grate on the Mod 3 stove, with 12% hole area, was made out of 1.0mm sheet metal. Tinsmiths will be asked to use sheet at least 1.0mm thick for the grate and, preferably, sheet 2.0mm or more thick. A layer of creosote built up on the inner walls of the Mod 1 and Mod stoves with no noticeable degradation of these surfaces after 25 firings.

Copies of the final prototype metal stove are being provided to two or three tinsmiths for duplication. The model stove they are being given is fastened together with sheet metal screws so that it can be disassembled easily. This exercise should reveal, first, whether tinsmiths can make the stove; second, how much it will cost; and third, their suggestions as to how the design might be improved. Further, it will provide stoves for controlled cooking tests, assuming tinsmiths are able to make them.

b. Mud Stoves

The better performing mud stoves provided overall efficiencies in the range of 18-20%. This is approximately double the efficiency of the one-pot open fire and 50% greater than the efficiency of the two-pot open fire. Some of the experimental mud stoves also require significantly less time to bring water to a boil compared to the open fire.

The use of a grate in mud stoves proved to be extremely valuable for improving ease of use, raising the efficiency, and reducing the time required to perform the standard task. As shown in the accompanying drawing, a tripod pot stand with built-in grate has been developed and constructed. The stand can be made from welded angle iron or the thin rods now used for pot supports. A mud stove body of the louga or C-shaped design is built around the stand.

The experimental pot stand-grate unit has two major advantages. First, a grate is conveniently added to the stove with the distance from grate-to-pot standardized by the position of the grate in the stand. Second, the stand takes the weight of the cast iron pots off of the mud stove body, which should greatly enhance the life

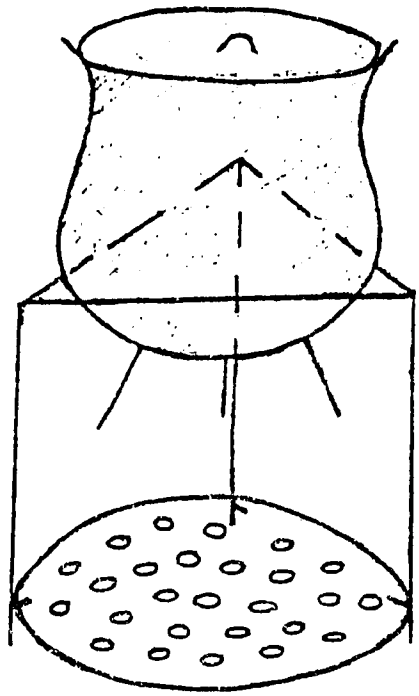

of a mud stove. Experimental tripod stand-grate units will be tested in the near future.

Encouraging results were obtained using a dung/soil mix for mud stoves in Ditshegwane, which greatly reduced construction time and labor. After drying and a few firings, dung/soil stoves show no visible deterioration and appear to be as durable as lorena (sand/clay) stoves. Mud stoves in Ditshegwane will continue to be made out of a dung/soil mix and their long-term durability monitored.

The mixed results with the experimental Tungku Lowon stoves during the WB tests indicate that care must be taken in mud stove design and construction. Apparently, small variations in the characteristics of a stove can affect performance. Hence, there is a need to determine and standardize proper dimensions for each mud stove type. A similar recommendation was made in a recent review of improved wood-burning cookstoves (Krishna Prasad 1983).

REFERENCES

Acott, T., et al. 1980 "Helping People in Poor Countries Develop Fuelsaving Cookstoves," German Appropriate Technology Exchange, Eschborn, FRG.

ARD, Inc. 1981 "Botswana Renewable Energy Technology Project," proposal submitted to U.S. Agency for International Development, Washington, D.C.

Burrill, G. 1980 "The Role of Evaluation in Renewable Energy Projects in Africa," in Energy for Africa--Selected Readings, D. French and P. Larson, eds., U.S. Agency for International Development, Washington, D.C.

Cauley, H. 1982 personal communication with Howard Geller, Nov. 1982.

DeLepeleire, G., Krishna Prasad, K., Verhaart, P., and Visser, P. 1981 A Woodstove Compendium, Wood-burning stove group, Eindhoven, The Netherlands.

Geller, H.S. 1982 "Cooking in the Ungra Area: Fuel Efficiency, Energy Losses, and Opportunities for Reducing Firewood Consumption," Biomass 2, pp. 83-101.

Geller, H.S. 1983 "Fuel Efficiency and Performance of Traditional and Innovative Cookstoves," Proceedings of the Indian Academy of Sciences (in press).

Geller, H.S. and Dutt, G.S. 1983 "Measuring Cooking Fuel Economy," Wood Fuel Surveys, UNFAO, Rome.

Holman, J.P. 1976 Heat Transfer, McGraw-Hill, New York, pp. 255-260, 499, 503.

Ingersoll, L.R., Zobel, O.J. and Ingersoll, A.C. 1948, Heat Conduction, Academic Press, New York.

ITDG 1983 "New Stoves in Senegal," Boiling Point, No. 4, Intermediate Technology Development Group, Reading, England, pp. 4-5.

Jelenic, N.E. and van Vegten, J.A. 1981 "A Pain in the Neck: The Firewood Situation in South-Western Kgatleng, Botswana," NIR Research Note No. 5, National Institute of Development and Cultural Research, Gaborone.

Joseph, S., Shanahan, Y.J., Trussell, J. and Bialy, J. 1980 "Compendium of Tested Stove Designs," Intermediate Technology Development Group, London.

Joseph, S. and Shanahan, Y.J. 1980 "Designing a Procedure for the Testing of Woodburning Cooking Stoves Made of Mud or Ceramics," Intermediate Technology Development Group, London.

Kinyanjui, M. 1982 "The Thai Claystove Industry," REDP-TR-1, Kenya Renewable Energy Development Project, Nairobi. Also personal communication to Howard Geller, Jan. 1983.

Krishna Prasad, K. 1983 "Woodburning Stoves: Their Technology, Economics and Deployment," working paper WP. 115, World Employment Programme, ILO, Geneva.

MMRWA 1981, "Paper for Presentation to the United Nations Conference on New and Renewable Sources of Energy," Ministry of Mineral Resources and Water Affairs, Government of Botswana.

Nkwe, A. 1980 "Report on the Mud Stove Program as Carried Out at the Rural Industries Innovation Centre - Kanye, Botswana," Rural Industries Innovation Centre, Kanye, Botswana.

Shaikh, A. 1980 "A Framework for Evaluating the Economics of Renewable Energy Technologies," in Energy for Africa--Selected Readings, D. French and P. Larson, eds., U.S. Agency for International Development, Washington, D.C.

VITA 1982 "Testing the Efficiency of Wood-burning Cookstoves," Provisional International Standards, Volunteers in Technical Assistance, Arlington, U.S.A.

Weyer, F. 1982 "Development of the RTU Improved Paola," Thaba Tseka Mountain Development Project, Maseru, Lesotho.

Wisner, B. 1982 "SADCC Project: Country Report Botswana," National energy profile prepared for the Southern African Development Coordination Conference Energy Seminar, Harare, Zimbabwe.

Yameogo, G., Oeudraogo, I. and Baldwin, S. 1982 "Lab Tests of Fired Clay Stoves, the Economics of Improved Stoves, and Steady State Heat Loss from Massive Stoves," CILSS/VITA, Ouagadougou, Upper Volta.

APPENDIX A

WATER BOILING TEST
DATA AND CALCULATION FORM

Test Number_____ Location _____

Date_____ Air temp. ____°C. Wind_____ Rel. humidity_____%

Stove_____ Stove condition _____

Tester_____ Remarks_____

BASIC TEST DATA	INITIAL MEASUREMENT	END OF HIGH POWER PHASE	END OF LOW POWER PHASE
Wood moisture content	a)_____		
Weight of wood	b)_____kg	j)_____kg	u)_____kg
Weight of charcoal		k)_____kg	v)_____kg
Weight of Pot #1 with lid and water	c)_____kg	m)_____kg	w)_____kg
Weight of Pot #2 with lid and water	d)_____kg	n)_____kg	y)_____kg
Weight of Pot #3 with lid and water	e)_____kg	p)_____kg	z)_____kg
Water temperature, Pot #1	f)_____°C	q)_____°C	aa)_____°C
Water temperature, Pot #2	g)_____°C	r)_____°C	bb)_____°C
Water temperature, Pot #3	h)_____°C	s)_____°C	cc)_____°C
Time	i)_____	t)_____	dd)_____

(Use the graph outline on reverse side to record changes in water temperature)

CALCULATIONS	HIGH POWER PHASE	LOW POWER PHASE
Wood consumed	A) b - j = _____kg	J) j - u = _____kg
Charcoal remaining	B) k = _____kg	K) v - k = _____kg
Equivalent dry wood consumed	C) A(1-a) - 1.5 B = ____kg	L) J(1-a) - 1.5 K = ____kg
Water vaporized, Pot #1	D) c - m = _____kg	M) m - w = _____kg
Water vaporized, Pot #2	E) d - n = _____kg	N) r - bb = _____kg
Water vaporized, Pot #3	F) e - p = _____kg	P) s - cc = _____kg
Consumption ratio	G) D/(D+E+F) = _____	Q) M/(M+N+P) = _____
Std. specific consumption	H) C/D = _____	R) L/M = _____
Duration of test	I) t - i = _____	S) dd - t = _____

APPENDIX B

T-Table

Degrees of freedom	Level of significance ∞ (%)* 10	5	2.5	1	0.5
1	3.08	6.31	12.70	31.80	63.70
2	1.89	2.92	4.30	6.96	9.92
3	1.64	2.35	3.18	4.54	5.84
4	1.53	2.13	2.78	3.75	4.60
5	1.48	2.01	2.57	3.36	4.03
6	1.44	1.94	2.45	3.14	3.71
7	1.42	1.90	2.36	3.00	3.50
8	1.40	1.86	2.31	2.90	3.36
9	1.38	1.83	2.26	2.82	3.25
10	1.37	1.81	2.23	2.76	3.17
11	1.36	1.80	2.20	2.72	3.11
12	1.36	1.78	2.18	2.68	3.06
13	1.35	1.77	2.16	2.65	3.01
14	1.34	1.76	2.14	2.62	2.98
15	1.34	1.75	2.13	2.60	2.95
16	1.34	1.75	2.12	2.58	2.92
17	1.33	1.74	2.11	2.57	2.90
18	1.33	1.73	2.10	2.55	2.88
19	1.33	1.73	2.09	2.54	2.86
20	1.32	1.72	2.09	2.53	2.84
21	1.32	1.72	2.08	2.52	2.83
22	1.32	1.72	2.07	2.51	2.82
23	1.32	1.71	2.07	2.50	2.81
24	1.32	1.71	2.06	2.49	2.80
25	1.32	1.71	2.06	2.48	2.79
26	1.32	1.70	2.06	2.48	2.78
27	1.31	1.70	2.05	2.47	2.77
28	1.31	1.70	2.05	2.47	2.76
29	1.31	1.70	2.04	2.46	2.76
30	1.31	1.70	2.04	2.46	2.75
∞	1.28	1.64	1.96	2.33	2.58

* This is the one-sided level of significance that is applied when testing whether the mean from one population is greater than the mean from another.

APPENDIX C

Water Boiling Test Data

Stove type	Pot size	Time for HPP (min.)	EDWC (kg)	SSC-HPP	SSC-LPP	PHU (%)	Power Ratio	Notes
One-pot open fire	2	60	1.76	3.35	2.18	6.2	1.69	with tripod
"	2	52	2.37	3.71	3.24	5.2	0.90	with tripod
"	2	36	1.17	1.88	0.80	13.3	1.75	with tripod dug into ground
"	3	59	1.36	3.83	1.35	10.1	1.23	no tripod
"	3	69	1.30	3.03	1.42	10.8	1.35	no tripod
Two-pot open fire	1,2	40	1.94	2.78	1.98	7.8	1.47	with tripod
"	1,2	38	3.35	2.11	0.94	10.0	1.31	no tripod
"	1,2	47	1.67	1.26	0.77	15.7	1.02	no tripod
"	1,2	36	1.31	2.66	0.48	16.7	2.92	no tripod
Mod 1 Metal low grate	2	31	0.96	1.08	0.73	16.7	2.56	bottom holes open, top holes closed
"	2	40	0.94	2.32	0.71	15.3	1.48	"
"	2	47	1.00	1.78	0.84	14.0	1.24	"
Mod 1 Metal middle grate	2	33	1.18	1.57	0.79	14.9	1.44	bottom holes open, top holes closed
"	2	32	0.78	1.23	0.59	19.5	1.69	"
"	2	31	1.18	1.40	0.84	14.4	1.96	"
Mod 1 Metal high grate	2	38	0.80	1.26	0.74	17.8	1.60	bottom holes open, top holes closed
"	2	34	0.88	1.28	0.66	18.1	1.54	"
"	2	31	0.71	1.30	0.66	18.5	2.01	"

Stove type	Pot size	Time for HPP (min.)	EDWC (kg)	SCC-HPP	SCC-HPP	PHU (%)	Power Ratio	Notes
Mod 1 Metal high grate	2	39	0.82	1.16	0.90	16.1	1.99	Bottom holes closed, top holes closed
"	3	45	0.89	2.39	0.65	18.1	1.42	"
Mod 2 Metal mud liner	1	27	0.81	1.23	0.57	18.9	1.45	grate with 21% hole area
"	1	40	0.77	1.75	0.87	14.4	0.95	"
"	1	42	0.74	2.23	0.74	12.4	1.26	"
Mod 2 Metal mud liner	2	38	0.75	1.01	0.53	21.8	1.57	grate with 12% hole area
"	2	37	0.82	1.09	0.50	22.1	1.41	"
"	2	43	0.99	1.23	0.48	19.2	1.31	grate with 21% hole area
"	2	38	0.87	1.96	0.72	16.5	2.23	"
Mod 2 Metal mud liner	3	41	0.98	1.47	0.54	20.5	1.82	grate with 12% hole area
"	3	45	0.92	1.59	0.63	18.8	1.89	"
"	3	36	1.05	1.08	0.50	22.8	1.55	grate with 21% hole area
"	3	42	0.87	1.36	0.62	20.0	1.84	grate with 12% hole area, door open
"	3	48	0.92	1.28	0.51	21.8	1.58	"
Mod 2 Metal mud/vermiculite liner	2	44	0.96	1.75	0.62	17.1	1.43	
"	2	37	0.83	1.39	0.67	18.1	1.90	
"	3	44	0.98	1.31	0.51	20.7	2.22	
"	3	42	0.82	1.14	0.42	24.1	1.98	

Stove type	Pot size	Time for HPP (min.)	EDWC (kg)	SSC-HPP	SSC-LPP	PHU (%)	Power Ratio	Notes
Mod 3 Metal mud/vermiculite liner	2	41	0.85	1.19	0.68	17.9	1.56	
"	3	41	0.83	1.36	0.51	21.9	2.24	
"	3	46	0.99	1.25	0.41	24.2	1.54	
Louga - Kanye no grate	2	40	1.16	1.56	0.85	14.7	0.81	very smoky
"	2	39	1.17	1.89	0.71	13.6	2.63	air/fuel holes enlarged
"	2	51	0.59	1.67	0.31	11.3	5.09	
Louga - Kanye with grate	2	41	1.17	3.27	1.07	11.1	1.67	moderate wind
"	2	35	1.05	1.41	0.72	16.4	1.44	
"	2	37	0.76	1.19	0.60	18.8	2.09	
Louga - Ditshegwane with water heater and grate	2	41	1.25	2.28	0.64	16.1	1.92	moderate wind
"	2	32	1.01	1.00	0.56	21.9	2.72	
"	2	31	0.75	1.19	0.54	22.2	2.45	
Food tin water heater/stove	2	35	1.37	1.92	0.82	14.8	1.89	high winds
"	2	34	0.80	1.27	0.37	25.6	2.55	
"	2	37	1.23	1.01	0.42	20.4	2.40	
"	2	33	1.17	1.29	0.78	17.1	1.80	
Tungku Lowon - Kanye	1,2	47	1.55	1.37	0.54	19.1	1.37	stove facing wind, front damper
"	1,2	45	1.40	1.46	0.65	16.5	1.52	"
"	1,2	58	0.90	2.67	0.85	15.9	1.25	"

Stove type	Pot size	Time for HPP (min.)	EDWC (kg)	SSC-HPP	SSC-LPP	PHU (%)	Power Ratio	Notes
Tungku Lowon - Ditshegwane no grate	1,2	58	1.47	2.81	1.07	11.3	1.47	new stove, third firing only
"	1,2	49	1.08	2.97	0.81	13.7	2.11	
"	1,2	62	1.46	1.83	0.79	14.8	1.72	high wind
Tungku Lowon - Ditshegwane with grate	1,2	48	1.10	1.40	0.77	17.4	1.11	
"	1,2	39	1.01	1.30	0.59	19.7	1.49	
Two-pot mud stove with low chimney and grate	1,2	50	1.44	2.01	0.94	13.7	1.28	
"	1,2	49	0.92	3.52	0.49	17.2	2.28	
"	1,2	45	1.18	1.97	0.47	19.8	2.02	

APPENDIX D

Estimate of the Conductivity and Heat Loss Rate from the Air Space Between the Walls of the Final Experimental Model 3 Stove

The dimensions of the Mod 3 stove include $L = 0.20m$ and $\delta = 0.040m$ where L is the height of the insulating air space and δ is the thickness. Let us assume the following temperature values:

$T_i = 600°C$

$T_o = 150°C$

$\Delta T = 450°C$

$\overline{T} = 375°C \cong 650°K$

where T_i is the average temperature of the inner wall of the firebox and T_o is the average temperature of the outer wall. It is further assumed that the steel walls have negligible resistance relative to the air space.

At a temperature of 650°K, air has the following properties:

$\beta = 0.00154°K^{-1}$

$Pr = 0.682$

$\rho = 0.543\ Kg/m^3$

$\mu = 3.177x10^{-5}\ Kg/m\cdot sec$

$k = 0.0495\ W/m\cdot °C$

where β is the coefficient of expansion, Pr is the Prandtl number, ρ is the density, μ is the dynamic viscosity, and k is the conductivity.

The Grashof number, which represents the ratio of buoyancy forces to viscous forces in the air space, is given by :

$$Gr_\delta = \frac{g \cdot \beta \cdot \rho^2 \cdot \Delta T \cdot \delta^3}{\mu^2}$$

where g is the gravitational constant. In this case,

$$Gr_\delta = 9.8\ \frac{m}{sec^2}\ 1.54x10^{-3}°K^{-1} \cdot (0.543\ \frac{Kg}{m^3})^2 \cdot 450°K$$

$$\cdot\ (0.04m)^3 \div (3.177x10^{-5}\ Kg/m\cdot sec)^2 = 1.27x10^5$$

and $Gr_\delta \cdot Pr = 8.67x10^4$.

This implies that the free convective flow between the walls of the air space is in the region of laminar boundary-layer flow.

The effective conductivity for the air space k_e is given by

$$k_e = k \cdot Nu_\delta$$

where Nu_δ is the Nusselt number, representing the ratio of convective to conductive heat transfer. Empirical studies provide the following formula for the Nusselt number in a vertical annulus under the assumed conditions:

$$Nu_\delta = 0.197 \cdot (Gr_\delta \cdot Pr)^{0.25} \cdot \left(\frac{L}{\delta}\right)^{-0.111}$$

In this case,

$$Nu_\delta = 0.197 \cdot (8.67 \times 10^4)^{0.25} \cdot \left(\frac{.20}{.04}\right)^{-0.111} = 2.83$$

Hence,

$$k_e = 2.83 \times 0.0495 \frac{W}{m \cdot °C}$$

$$= 0.140 \frac{W}{m \cdot °C}$$

For the heat transfer across the annulus space,

$$Q = \frac{2\pi \cdot k_e \cdot L \cdot \Delta T}{\ln(r_o/r_i)}$$

where r_o is the outer radius of the stove body and r_i is the inner radius ($\delta = r_o - r_i$). For the Mod 3 stove, r_o = 15.5cm and r_i = 11.5cm. Therefore,

$$Q = \frac{2\pi \cdot 0.14 \frac{W}{m \cdot °C} \cdot 0.20m \cdot 450°C}{\ln(15.5/11.5)}$$

$$= 266 \text{ W}$$

To put this heat loss rate in perspective, the average fuel energy input rate in 19 tests with the Mod 2 and 3 stoves was 2934 W. (All tests were carried out with mud or mud/vermiculite insulation rather than an air space.) Thus, the calculated heat loss rate through the double-walled firebox is 9% of the energy input rate.