PN-AAW-998
49923

DEVELOPMENT AND APPLICATION OF DECENTRALIZED ENERGY SYSTEMS UTILIZING NON-CONVENTIONAL ENERGY SOURCES
- SALOJIPALLY PROJECT -

FIRST CONFERENCE REPORT
May 30, 1981

JPL TASK PLAN NO: 70-980
BHEL PROJECT NO: YN-80-240-83

IMPLEMENTING AGENCIES:
Bharat Heavy Electricals Limited, Hyderabad, India
Central Electronics Limited, Sahibabad, India

COLLABORATING AGENCY:
Jet Propulsion Laboratory, Pasadena, California, USA

DEVELOPMENT AND APPLICATION OF DECENTRALIZED ENERGY SYSTEMS UTILIZING NON-CONVENTIONAL ENERGY SOURCES
- SALOJIPALLY PROJECT -

FIRST CONFERENCE REPORT
May 30, 1981

JPL TASK PLAN NO: 70-980
BHEL PROJECT NO: YN-80-240-83

IMPLEMENTING AGENCIES:
Bharat Heavy Electricals Limited, Hyderabad, India
Central Electronics Limited, Sahibabad, India

COLLABORATING AGENCY:
Jet Propulsion Laboratory, Pasadena, California, USA

CONTENTS

I GENERAL

A. INTRODUCTION 1-1
B. SCOPE OF WORK 1-1
C. INFORMATION EXCHANGE 1-2
D. PLANNING CONFERENCE 1-3
E. CONFERENCE DISCUSSION 1-4
1. Detailed Discussion 1-4
a. Solar Thermal Power Generation System 1-4
b. Solar Photovoltaic System 1-5

II SOLAR PHOTOVOLTAIC SYSTEM 2-1
A. DESIGN AND TEST SPECIFICATIONS 2-1
B. TENTATIVE SCHEDULE AND MILESTONES 2-1
C. INSTRUMENTATION REQUIRED 2-3

III SOLAR THERMAL POWER GENERATION 3-1
A. SYSTEM OBJECTIVES 3-1
B. SYSTEM CONFIGURATIONS 3-1
C. PROJECT TEAMS 3-4
D. DIVISION OF RESPONSIBILITIES 3-5
E. TENTATIVE WORK SCHEDULE AND MILESTONES 3-6
F. TENTATIVE LIST OF HARDWARE - PROCUREMENT FROM USA 3-6
G. MANPOWER EXCHANGE SCHEDULE 3-7

APPENDIX

A. Details of Selected Site and Applications Analysis A-1
B. CEL Tour of JPL PV Facilities and Discussions with JPL Personnel. B-1
C. CEL Visits to PV Manufacturing Companies C-1
D. BHEL Visits to JPL and Other Facilities D-1

Table 1. Monthly Average Direct Solar Insolation Data A-4

Figure 1. Solar Thermal Power System Block Diagram 3-2
Figure 2. Solar Thermal Power Plant System Layout (Alt. B) 3-3

SECTION I
GENERAL

A. INTRODUCTION

The Government of India, Department of Science and Technology (DST) and the United States Agency for International Development (USAID) are co-sponsoring a project for the development of a solar energy system in India. The implementing agencies are Bharat Heavy Electricals Ltd. (BHEL), Hyderabad, India and Central Electronics Ltd. (CEL), Sahibabad, India. The Jet Propulsion Laboratory (JPL), Pasadena, California, USA is the collaborating agency whose role is to provide consultation in specific design areas and to procure hardware from the USA with the funds provided by USAID

The objective of the project is to design, develop, install, and test solar energy systems for utilization in a rural environment. The total system is comprised of two subsystems; solar photovoltaic and solar thermal power generation. The total capacity of the solar photovoltaic system will be 7 KW peak, while the capacity of the solar thermal power generation system will be approximately 12 KWe. The Department of Science and Technology approved the project on October 3, 1980. Jet Propulsion Laboratory received approval from USAID in November, 1980. November 26, 1980, will be considered the project starting date.

Initial activities were related to the survey of rural areas, selection of an appropriate site, applications analysis and preliminary system design. These tasks have since been completed and the first conference was held in the USA from May 16, 1981 to May 30, 1981 (inclusive of visits to other facilities).

This report includes the deliberations of the conference, brief details of the tasks accomplished, work schedule and milestones, manpower exchange schedule, and a listing of hardware to be procured from the USA.

B. SCOPE OF WORK

The project consists of two parallel system activities:

(1) The design, development, installation, and evaluation of a solar photovoltaic system.

(2) The design, development, installation, and evaluation of a point focusing solar thermal power generation system.

The overall project management is the responsibility of the Project Manager from BHEL. The CEL Project Manager will be the contact for the solar photovoltaic activity while the BHEL Project Manager will be the contact for solar thermal activities. JPL is the project collaborator and will provide design and support in specific areas identified in the latter part of this report. The JPL Project Manager will be the USA contact for the Indian teams.

The solar photovolatic system capacity will be 7 KW peak, about 5 KW to be supplied by JPL and the balance to be supplemented by CEL from its batch production. JPL will provide CEL with adequate instrumentation and control within allocated funds to aid in evaluation of the system performance. In addition to supplying photovoltaic modules, JPL will also support CEL in the procurement of advanced modules for testing, and materials for encapsulation to enhance advanced technology in this area.

The team from BHEL will be primarily responsible for the design, fabrication, installation and evaluation of the total solar thermal power generation system. JPL will provide design support in specific areas which are detailed in Section III of this report.

C. INFORMATION EXCHANGE

In order to ensure proper communication and information flow, the following procedure of information exchange is proposed:

(1) CEL Project Manager to correspond directly with JPL Project Manager, with copies to:
- o DST, Government of India
- o Science Counselor for India, Washington, DC
- o Project Manager, BHEL, India
- o USAID Office, New Delhi, India
- o USAID Office, Washington, DC

(2) BHEL Project Manager to correspond directly with JPL Project Manager, with copies to:
- o DST, Government of India
- o Science Counselor for India, Washington, DC
- o Project Manager, CEL, India
- o USAID Office, New Dehli, India
- o USAID Office, Washington, DC

(3) JPL Project Manager to correspond directly with the BHEL and CEL Project Managers, with copies to:

- o DST, Government of India
- o Science Counselor for India, Washington, DC
- o Project Manager, CEL
- o Project Manager, BHEL
- o USAID Office, New Delhi, India
- o USAID Office, Washington, DC

The JPL and BHEL Project Managers will exchange information regarding progress of the project on a monthly basis.

D. PLANNING CONFERENCE

The initial planning conference of the joint Indo-US teams involved in the India Energy Systems Project was held during the week of May 19, 1981 at Jet Propulsion Laboratory, Pasadena, California. The following people participated in the conference activities.

INDIA

Dr. T. K. Bhattacharya - CEL
Dr. N. K. Giri - BHEL
Mr. K. A. Khan - BHEL
Mr. T. K. Mukherjee - BHEL
Mr. S. K. Sangal - CEL
Mr. U. V. Warlu - CEL

UNITED STATES

Dr. M. E. Alper - JPL
Mr. R. Harrison - JPL
Dr. K. M. Koliwad - JPL
Mr. G. E. Nichols, Jr. - JPL
Dr. R. Levin - JPL
Mr. W. Owen - JPL
Mr. W. Carley - JPL
Mr. J. Newnham - JPL
Mr. H. Bank - JPL

The proceedings of the conference consisted of the following basic activities:

1. General meeting and briefing by the Indian team.
2. Visit to JPL facilities and discussions with JPL personnel.
3. Visit to local manufacturing companies.

The remainder of the conference activities were conducted separately by the PV and solar thermal teams.

E. CONFERENCE DISCUSSION

The conference opened with the introduction and general remarks by Royal Harrison (JPL), who is the Project Manager for the United States. Then Mr. T. K. Mukherjee (BHEL), the Indian Project Manager, made a comprehensive presentation regarding site selection and application analysis. The Indian team answered several questions during the presentation. The major uncertainties appeared to be in the selection of application options though it was unanimously agreed that success of the project is paramount. The presentation gave a clearer view of the overall scope of the Project.

During the conference, the BHEL Project Manager outlined the following tasks which have been accomplished by the Indian teams:

- Study of several rural sites in India.
- Selection of a suitable site based on the study conducted.
- Assessment of energy needs of the selected community and energy potential at the site.
- Applications analysis studies.
- Preliminary system configuration and thermodynamic analysis of a "Rankine Cycle" based system.

It was concluded that since the selected community is predominately agrarian, and since energy needs for supply of water for irrigation hold the highest priority, it will be preferable to provide emphasis in fulfilling such needs. However, due attention should be paid to ensure that most of the selected community's needs derive some benefit from the proposed system.

(1) Detailed Discussion

(a) Solar Thermal Power Generation System

Detailed discussions took place on the system configuration proposed by BHEL. The salient points of discussion follow:

- From the point of view of fabrication, parabolic concentrators with flat faceted mirrors would be desirable. However, with rigidly fixed mirrors, it might be difficult to obtain the image within the narrow aperture area and obtain the desired concentration ratio. Therefore faceted mirrors with some degree of adjustment may be considered.

- Considering the latitude of the selected site, polar mounting of the concentrator, as proposed by BHEL, will be desirable.

- The collector field may comprise several concentrators of relatively small diameter (7 to 8.5 meters).

- A review of the "State of the Art" of thermal energy storage revealed that all the systems excepting "Sensible Heat Storage", are yet to be fully proven and are expensive.

- Considering the available technologies, reliability and related factors, a steam based "Rankine Cycle system was chosen. The concentrator receiver will generate steam directly, avoiding the high temperature oil loop.

- It is recognized that appropriate prime movers for solar thermal power generation systems of small capacities are difficult to acquire. Considering the duration of the project, status of technology and reliability, it was decided to select a steam engine as the prime mover, recognizing the possibility that the engine (or engines) may have to be specially constructed.

- It was recognized that while glass mirrors provide a good degree of specular reflectance, protection of the silvered surface from the environmental hazards will have to be examined and ensured as much as possible.

(b) Solar Photovoltaic System

Mr. Warlu of CEL proposed several issues for discussion. Significant among them were:

- JPL should procure advanced photovoltaic (PV) modules for experiments at CEL in addition to those procured for system application. He defined the advanced PV modules as those containing new technology elements such as Web ribbons, EFG ribbons, polycrystalline, etc. He suggested that the total volume of these advanced modules need not exceed 500 Watts.

- JPL should procure advanced encapsulation material to assist CEL in upgrading their capabilities to manufacture PV modules which utilize current US technology.

- In order to accomplish the above items within the budget, Mr. Warlu suggested that the volume of the US procured modules be reduced from the presently planned 5 KW to some appropriate level. He also suggested that CEL would then supplement the balance with their modules to ensure 7 KW delivery to the system application.

- JPL should exchange appropriate documents with CEL and BHEL on a timely basis.

The JPL representatives felt that such actions should be taken only if they do not affect the probability of success of the project's goals. Resolution of the above items were left as an action item for the joint JPL/CEL PV team.

Subsequent to the conference the Project Manager for the United States and JPL Management concluded that the actions suggested by Mr. Warlu involve a change of scope of the contract. Hence those actions should not be part of the present activity.

SECTION II
SOLAR PHOTOVOLTAIC SYSTEM

A. DESIGN AND TEST SPECIFICATIONS

It was tentatively agreed upon by both JPL and CEL teams that the module design be the same as that developed by JPL for LSA Block IV modules. Design and test specifications are contained in JPL/LSA reports 5101-83 and 5101-16. Another report, 5101-65 contains comprehensive information on module design, qualification, and testing specification. All these reports have been given to the Indian CEL team. After examination, the Indian team will submit a design package to JPL according to the following schedule.

B. TENTATIVE SCHEDULE AND MILESTONES

DATE		MILESTONE	RESPONSIBILITY
June 15, 1981--Aug 1, 1981>	1)	Send survey of available commercial modules to India ------->	JPL
June 1, 1981--Aug 15, 1981>	1)	Finalize PV modules specs and send to JPL ---------->	CEL
	2)	Finalize instrumentation specs ---->	CEL/JPL
August 31, 1981 ---------->	1)	Issue RFP for PV modules ---------->	JPL
September 30, 1981 ------->	1)	Receive proposals for PV modules -->	JPL
	2)	Issue procurement of instruments -->	JPL
Sept 30, 1981--Oct 30, 1981>	1)	Source selection and issue procurement for PV modules -------->	JPL
	2)	Finalize load distribution -------->	CEL/BHEL

July 1, 1981--Nov 30, 1981>	1)	Finalize system design and BOS procurement plan ---------->	CEL
	2)	Receive instruments ---------->	JPL
Nov 30, 1981--Jan 15, 1982>	1)	Complete batch production of Indian modules ---------->	CEL
	2)	Order for BOS procurement in India ---------->	CEL
January 30, 1982 --------->	1)	Ship Indian modules to USA for tests (quantity TBD) ---------->	CEL
February 15, 1982 -------->	1)	Receive Indian modules at JPL ----->	JPL
February 28, 1982 ---------	1)	Receive US modules at JPL (procurement) ---------->	JPL
Feb 28, 1982--Mar 15, 1982>	2)	Indian engineer at JPL ---------->	CEL/JPL
	3)	Tests start at JPL for all modules >	JPL
Feb 28, 1982--May 15, 1982>	1)	Complete tests of all modules at JPL ---------->	JPL
	2)	Ship modules and instruments to India ---------->	JPL
May 15, 1982--June 15, 1982>	1)	Receive shipment in India --------->	CEL
	2)	Procurement of BOS in India completed ---------->	CEL

SALOJIPALLY PROJECT
SOLAR PHOTOVOLTAIC SYSTEM

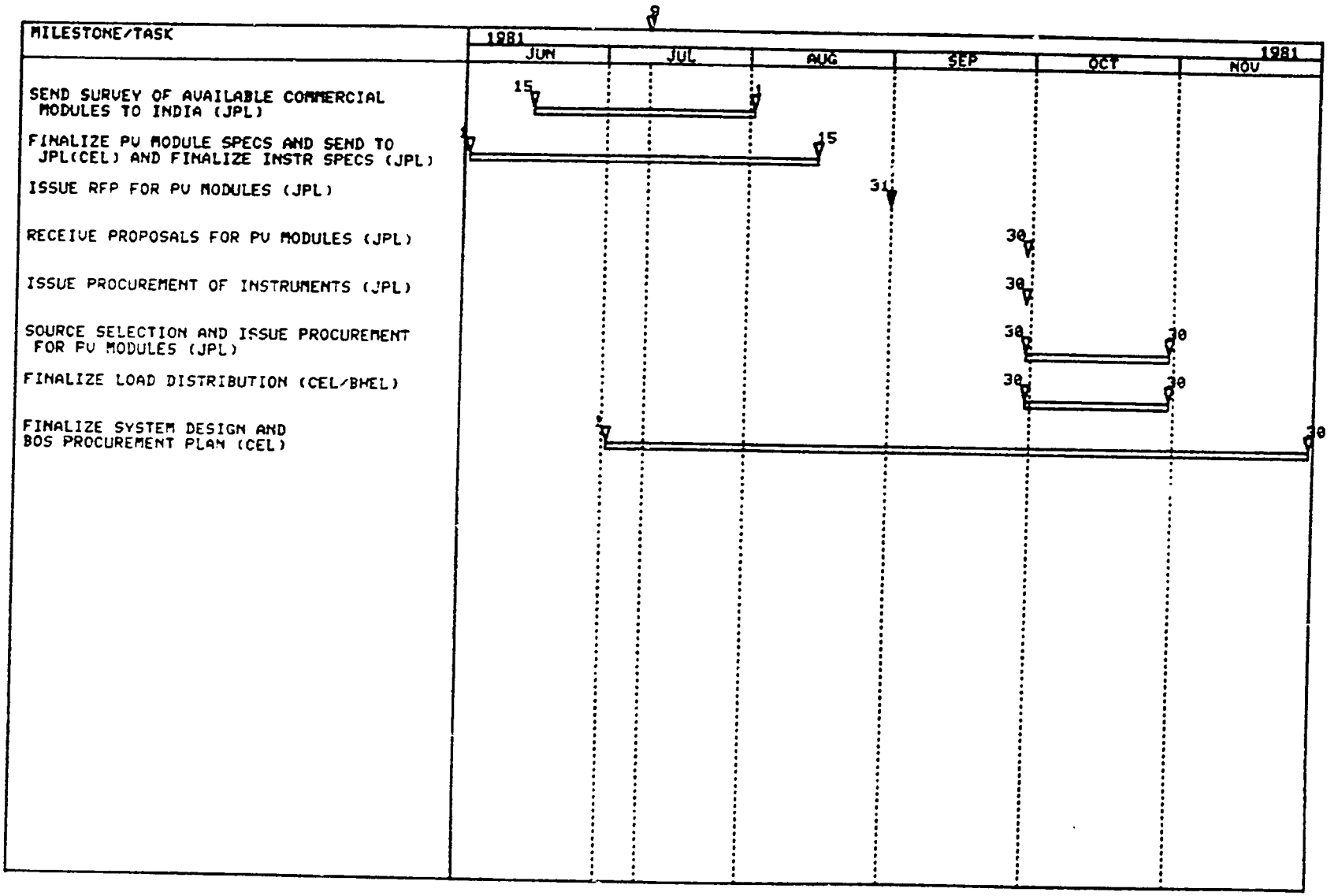

SALOJIPALLY PROJECT
SOLAR PHOTOVOLTAIC SYSTEM (2)

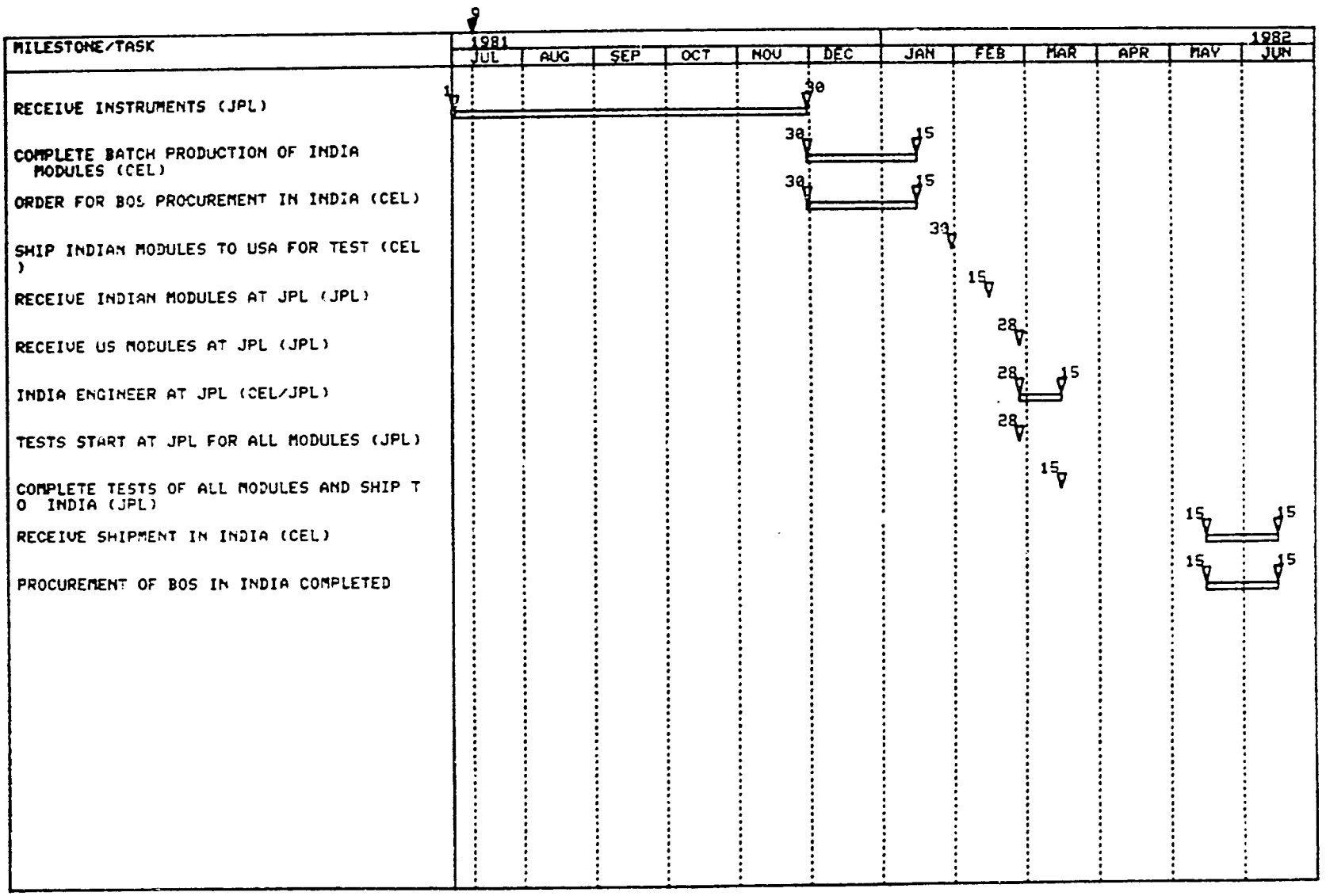

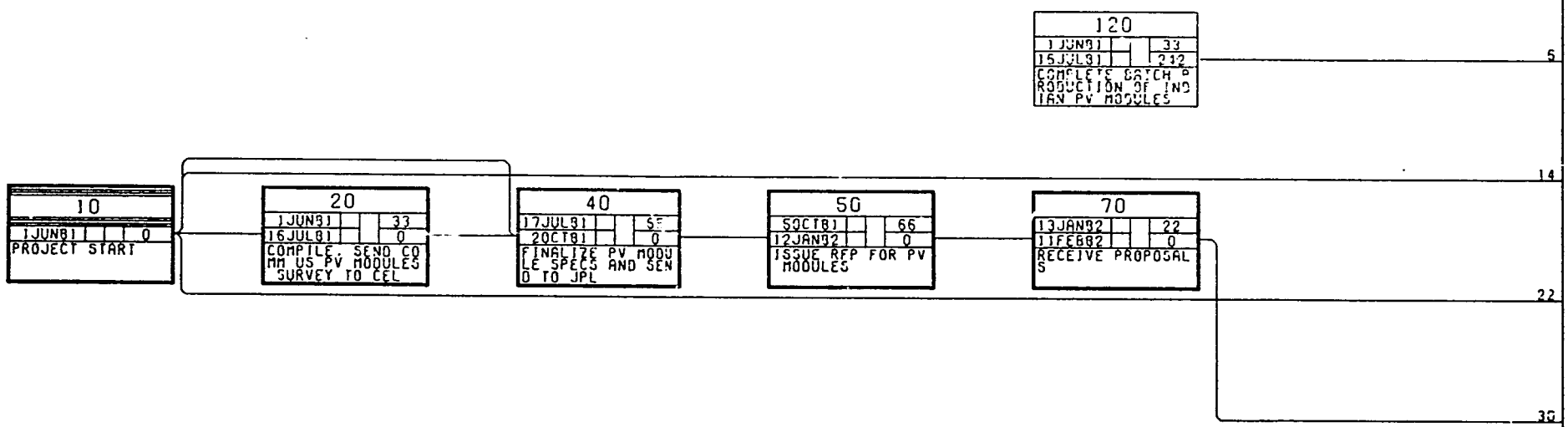

MODE O/FE	RUN JUL 15, 1981
PLOT "SPV1 "	PAGE 1 SHEET 1 / 3

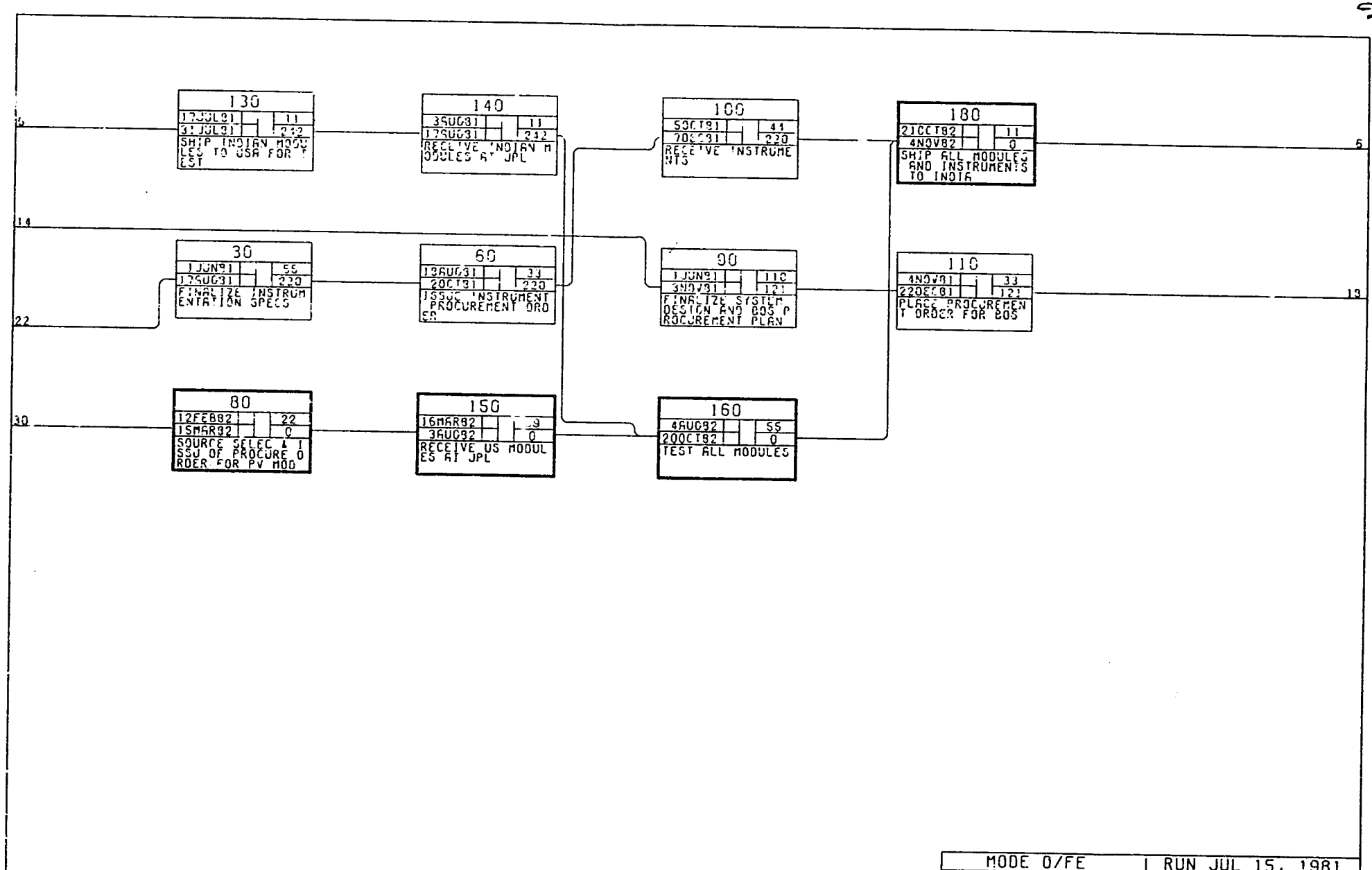

MODE 0/FE	RUN JUL 15, 1981
PLOT "SPV1 "	PAGE 1 SHEET 2 / 3

13

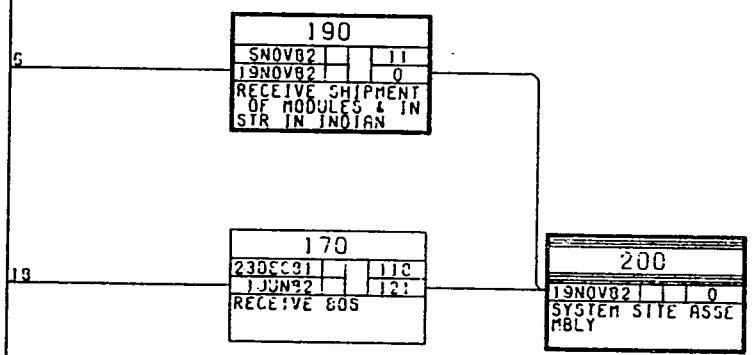

PROJECT/2 - V79B4		
JET PROPULSION LABORATORY SALOJIPALLY PHOTOVOLTAIC PROJE		
PROJECT SALOPV		
START DATE 1JUN81		COMPLETION 19NOV82
MODE O/FE	RUN JUL 15, 1981	
PLOT "SPV1 "	PAGE 1 SHEET 3 / 3	

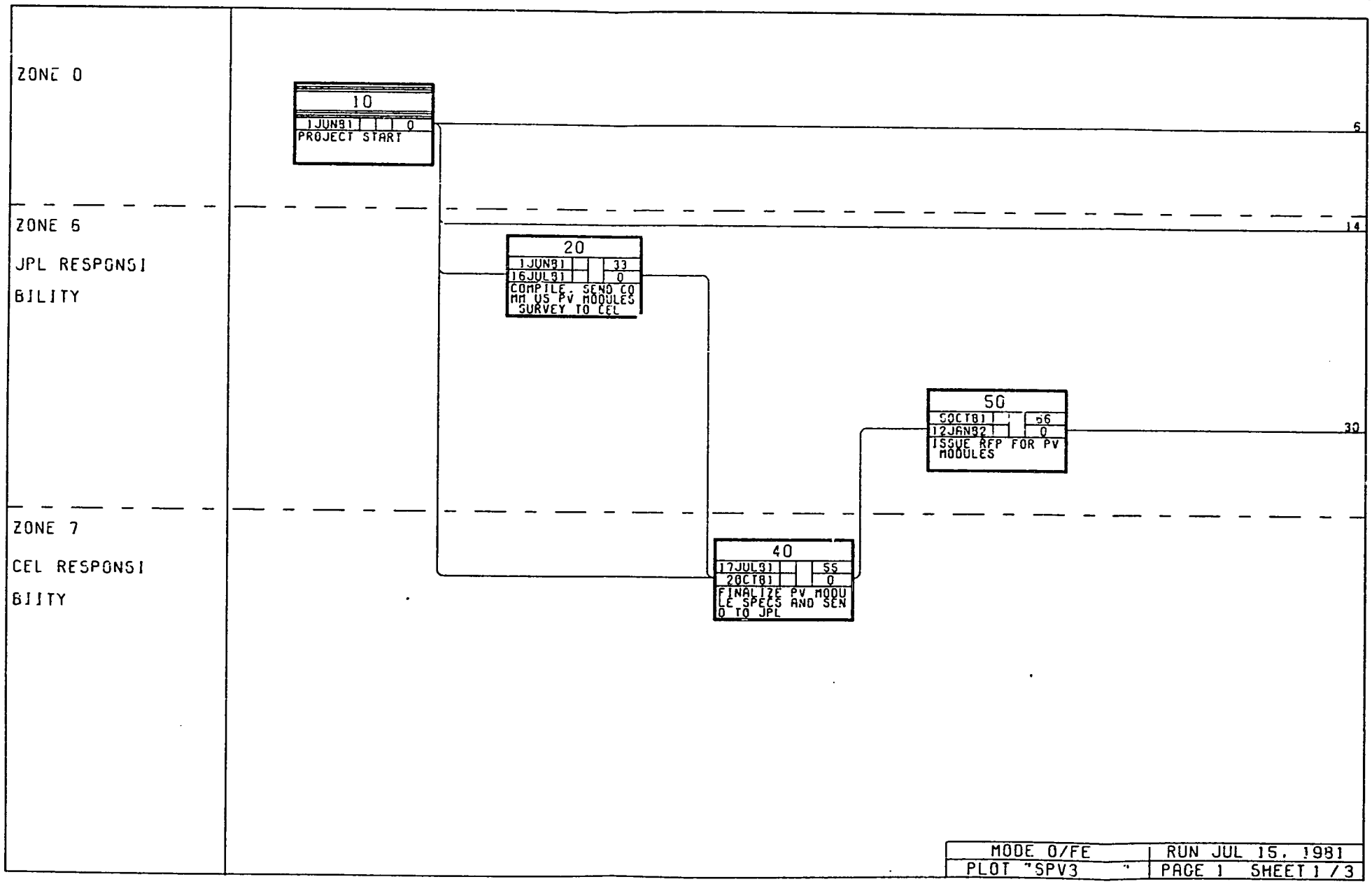
ZONE 0
ZONE 6
JPL RESPONSI
BILITY
ZONE 7
CEL RESPONSI
BILITY
10
1JUN81 0
PROJECT START
20
1JUN81 33
16JUL81 0
COMPILE, SEND CO
MM US PV MODULES
SURVEY TO CEL
40
17JUL81 55
20CT81 0
FINALIZE PV MODU
LE SPECS AND SEN
D TO JPL
50
20CT81 56
12JAN82 0
ISSUE RFP FOR PV
MODULES
6
14
30
MODE 0/FE
PLOT "SPV3 "
RUN JUL 15, 1981
PAGE 1 SHEET 1 / 3

15

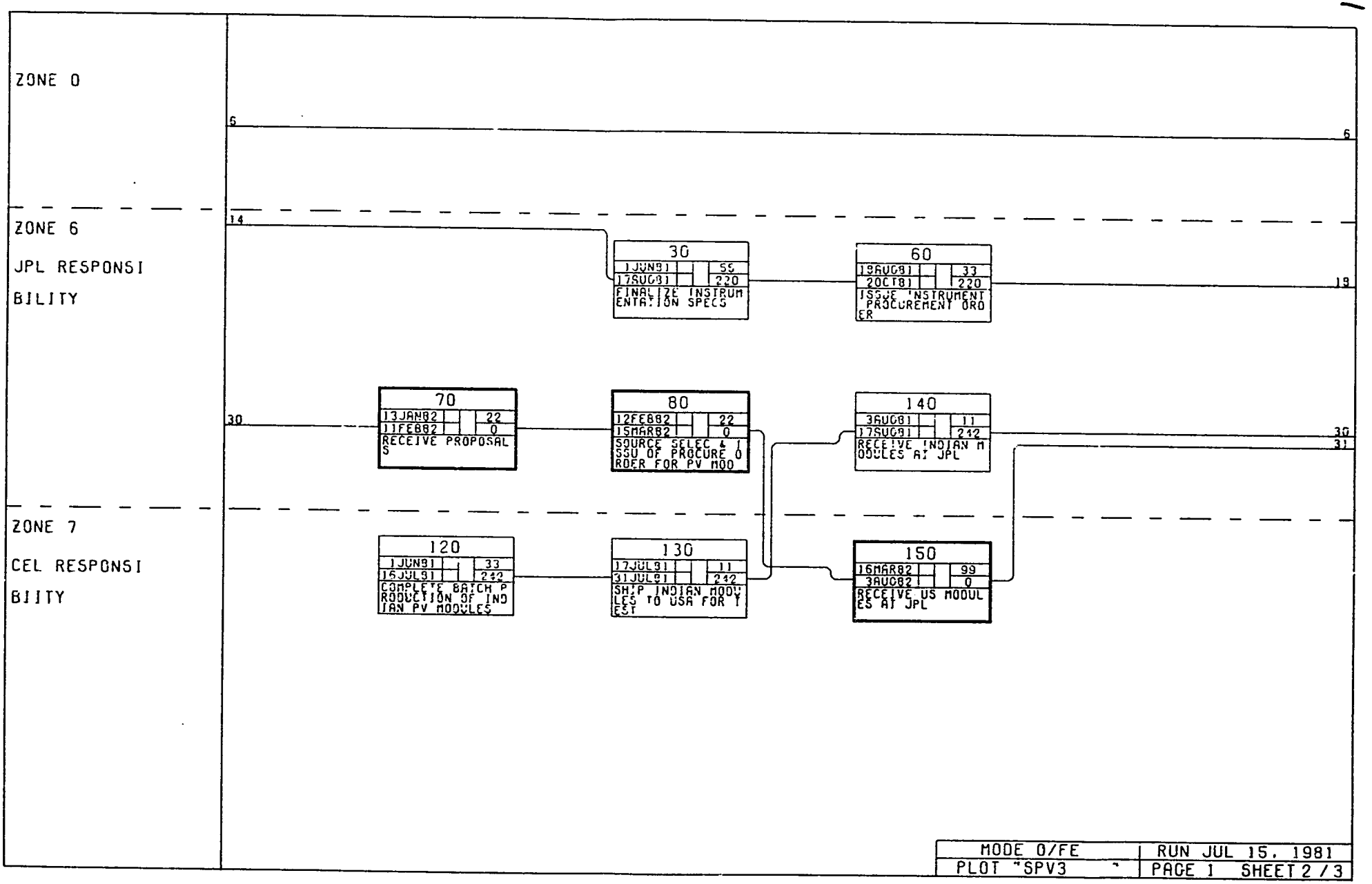
ZONE 0
ZONE 6
JPL RESPONSI
BILITY
ZONE 7
CEL RESPONSI
BIITY
6
14
30
30
31
30
1JUN81 55
17AUG81 220
FINALIZE INSTRUM
ENTATION SPECS
60
19AUG81 33
20CT81 220
ISSUE INSTRUMENT
PROCUREMENT ORD
ER
70
13JAN82 22
11FEB82 0
RECEIVE PROPOSAL
S
80
12FEB82 22
15MAR82 0
SOURCE SELEC & I
SSU OF PROCURE O
RDER FOR PV MOD
140
3AUG81 11
17AUG81 242
RECEIVE INDIAN M
ODULES AT JPL
120
1JUN81 33
16JUL81 242
COMPLETE BATCH P
RODUCTION OF IND
IAN PV MODULES
130
17JUL81 11
31JUL81 242
SHIP INDIAN MODU
LES TO USA FOR T
EST
150
16MAR82 99
3AUG82 0
RECEIVE US MODUL
ES AT JPL
MODE 0/FE
PLOT "SPV3 "
RUN JUL 15, 1981
PAGE 1 SHEET 2 / 3

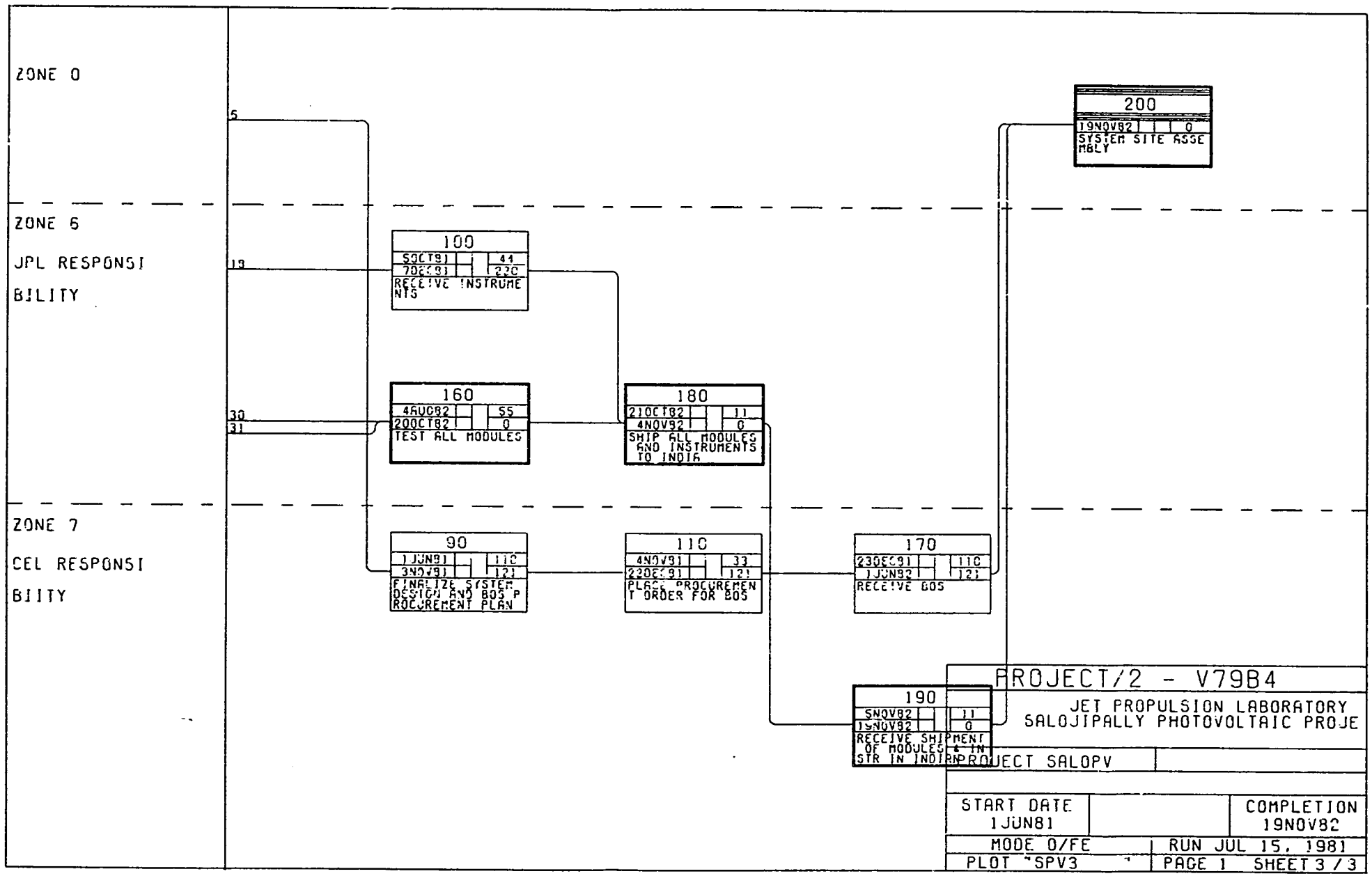
ZONE 0
ZONE 6
JPL RESPONSI
BILITY
ZONE 7
CEL RESPONSI
BIITY
5
19
30
31
100
5OCT81 44
7DEC81 220
RECEIVE INSTRUME
NTS
160
4AUG82 55
20OCT82 0
TEST ALL MODULES
180
21OCT82 11
4NOV82 0
SHIP ALL MODULES
AND INSTRUMENTS
TO INDIA
90
1JUN81 110
3NOV81 121
FINALIZE SYSTEM
DESIGN AND BOS P
ROCUREMENT PLAN
110
4NOV81 33
22DEC81 121
PLACE PROCUREMEN
T ORDER FOR BOS
170
23DEC81 110
1JUN82 121
RECEIVE BOS
190
5NOV82 11
19NOV82 0
RECEIVE SHIPMENT
OF MODULES & IN
STR IN INDIA
200
19NOV82 0
SYSTEM SITE ASSE
MBLY
PROJECT/2 - V79B4
JET PROPULSION LABORATORY
SALOJIPALLY PHOTOVOLTAIC PROJE
PROJECT SALOPV
START DATE
1JUN81
COMPLETION
19NOV82
MODE 0/FE
RUN JUL 15, 1981
PLOT "SPV3 "
PAGE 1 SHEET 3 / 3

C. INSTRUMENTATION REQUIRED

Priority	Material	Specs & Quantity
1.	Standard Cells (AMI or AMI 1.5)	2 each ($2,000)
2.	Cavity Radiometer	($6,000)

SECTION III
SOLAR THERMAL POWER GENERATION

A. SYSTEM OBJECTIVES

The basic objective in the development of the Solar Thermal Power Generation system is to design, fabricate, and install a system that would fulfill the essential energy needs of the selected community and would be compatible with the environmental infrastructure. The system will, therefore, have to be based on available technologies in order to ensure a degree of reliability. The implementing agencies will keep abreast of advances in technology through continuing research and development efforts and will, in the future, incorporate changes deemed appropriate.

Of all the available "Thermodynamic Cycles", "Rankine Cycle" offers the highest degree of reliability. Therefore, for this project, it is preferable to adopt a "Rankine Cycle" based system configuration. In selecting the system configuration, thorough consideration has been accorded to the status of technology and the environment of the selected community.

In the following paragraphs, the system configuration, the respective responsibilities of the participating agencies, work schedule, milestones, manpower exchange schedule, and other details have been outlined.

B. SYSTEM CONFIGURATIONS

The preferred system configuration employs central power conversion (single engine) with steam as the working fluid. The energy collecting concentrator is proposed to be parabolic or spherical with adjustable faceted mirrors. The receiver will be a "direct steam generation" type capable of providing the necessary temperature, pressure, and degree of superheat. A steam accumulator of appropriate capacity is expected to take care of transient situations and will provide minor storage capacity.

A simple diagram of the system configuration with preliminary system parameters appears on the following page.

18

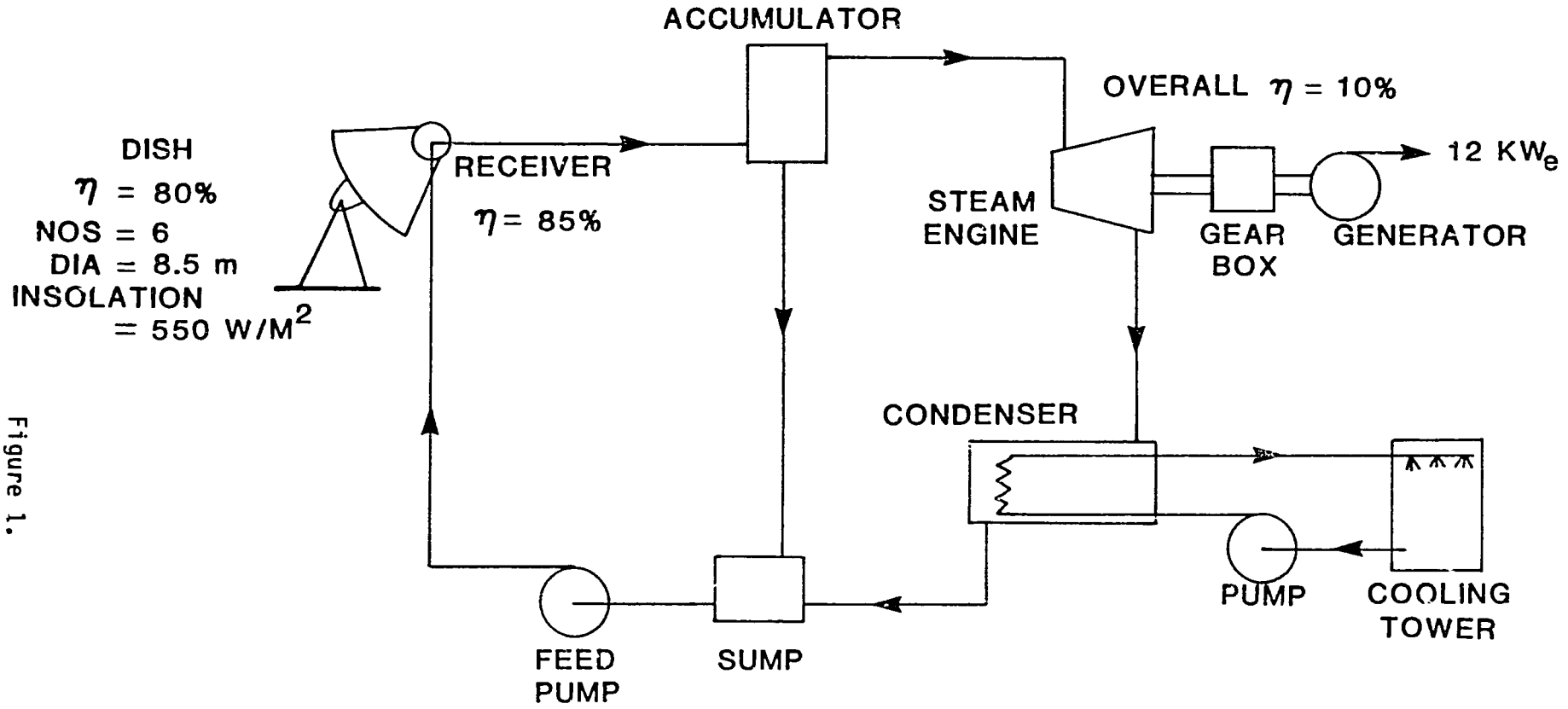

Figure 1.

SOLAR THERMAL POWER PLANT

SYSTEM LAYOUT

Configuration A

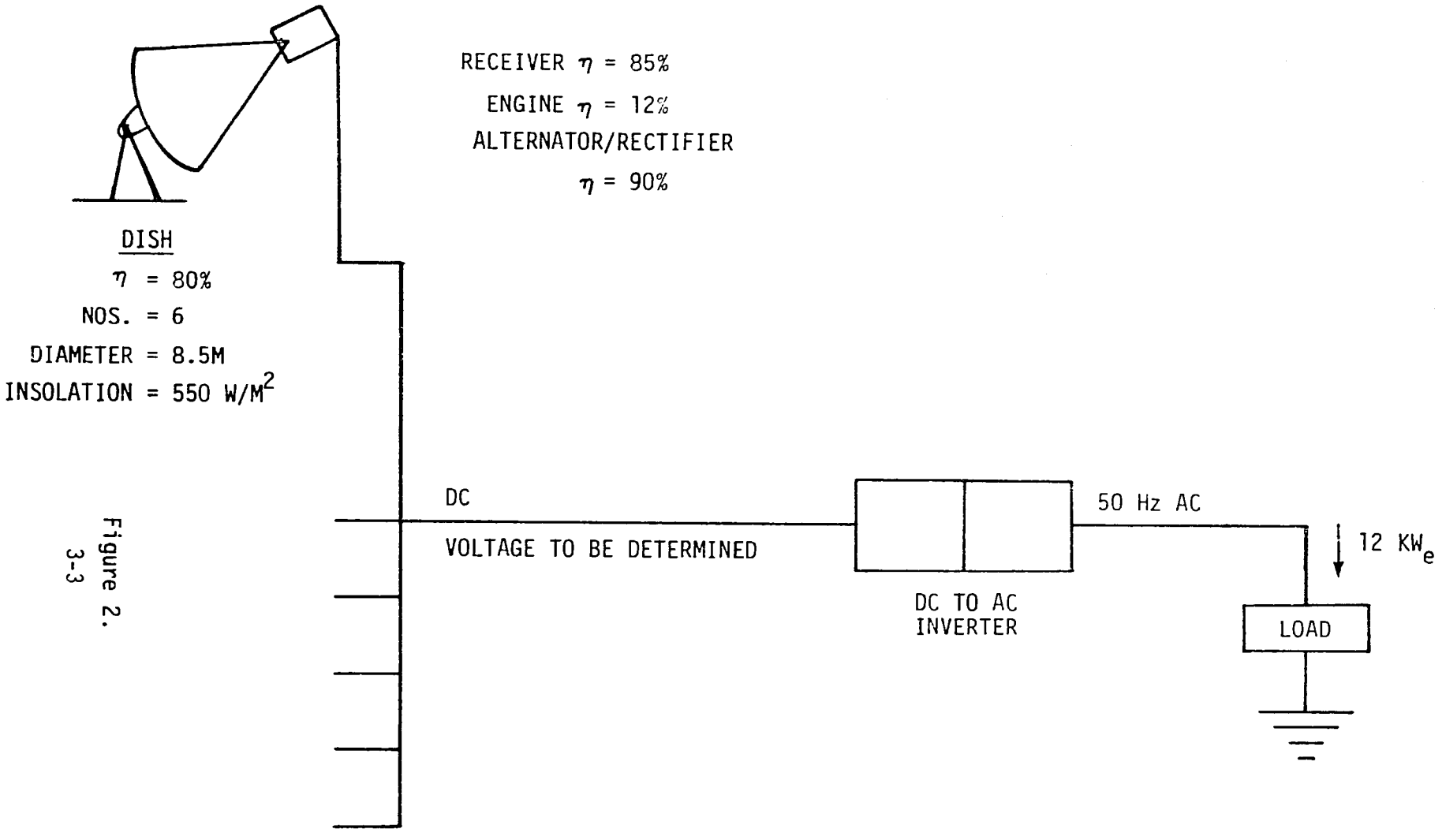

Figure 2.
3-3

SOLAR THERMAL POWER PLANT
SYSTEM LAYOUT (ALT. B)

C. PROJECT TEAMS

BHEL	TASK
Mr. S. K. Kaila	Concentrator and structure design, testing.
Mr. L. M. S. Ahmed	Receiver design and testing. Heat exchanger design. Installation.
Mr. K. Thirumalai	Prime mover design/fabrication, testing. System installation, testing.
Mr. K. A. Khan	Bio-mass system.
Mr. U. B. Sahay	Control, instrumentation.
Dr. N. K. Giri	System design, fabrication, installation, testing.
Mr. T. K. Mukherjee	Project Manager - coordination, control, instrumentation, fabrication, data analysis.

JPL	CONSULTING AREA
Mr. W. J. Carley	Concentrator design.
Mr. W. A. Owen	Receiver and prime mover design and testing.
Mr. H. Bank	Receiver and concentrator design
Mr. J. A. Newnham	Control, instrumentation.
Dr. R. R. Levin	System design.
Mr. Royal G. Harrison	Project Manager.

In addition to the above, specialist assistance will be obtained by the Project Managers from BHEL and JPL as deemed necessary.

D. DIVISION OF RESPONSIBILITIES

The project is primarily an Indian project in which the Indian teams will be responsible for design, fabrication, installation, commissioning, and testing. The collaborating agency's role (JPL) will be one of providing consultation in specific areas and in the support of procurement of hardware from the USA. Following will be the division of responsibilities of BHEL and JPL.

TASK	AGENCY
Overall system design	BHEL
Design of concentrator, structure and testing	BHEL
Design of receiver and testing	BHEL
Design of steam accumulator and heat exchangers	BHEL
Design understanding and testing of prime movers	BHEL
Design controls and instrumentation	BHEL
Procurement and fabrication of hardware in India	BHEL
System installation, commission testing, and data analysis	BHEL
Consultation and inputs for design of concentrator receiver, prime mover, controls, and instrumentation	JPL
Procurement of hardware from USA	JPL

22

E. TENTATIVE WORK SCHEDULE AND MILESTONES

Based on the chosen system configuration, and keeping the overall duration of the project in view, the following tentative work schedules for Phase I activities are proposed:

TASK	MILESTONE
Overall system design	16 May to July 30, 1981
Concentrator design	10 July to August 10, 1981
Receiver design	10 July to August 10, 1981
Design of steam accumulator and condenser	10 Sept to October 8, 1981
Procurement of prime movers	20 Oct to January 15, 1982
Control and instrumentation	16 Sept to October 30, 1981
Assembly, modification, and testing of prime mover	20 January to February 20, 1982
Final listing of hardware	November 1, 1981
Completion of design documentation	15 July to November 15, 1981
Meeting in India	November 30, 1981

F. TENTATIVE LIST OF HARDWARE - PROCUREMENT FROM USA

Mirrors for concentrator
High temperature materials for receiver
Insulating material for receiver
High temperature selective paint
Steam engine components/blanks - 2 sets
Gear box and high efficiency generator
Control valves
Feed water pump
Permanent magnet sensors
Temperature sensors
Pressure transducer
Flow meters
Controls and instrumentation for tracking
Data acquisition system
High pressure flexible hoses for steam line with couplings
A set of electrical and electronic tools

G. MANPOWER EXCHANGE SCHEDULE

BHEL ENGINEERS AT JPL (TENTATIVE)

TASK	DURATION	PERSON
System design	8 weeks from 5/16/81	Dr. N.K. Giri
Concentrator and structure design	4 weeks from 7/10/81	Mr. S.K. Kaila
Receiver design	4 weeks from 7/10/81	Mr. L.M.S. Ahmed
Prime mover modification and test	4 weeks from 1/20/82	Mr. K. Thirumalai
Control,	4 weeks from 9/16/81	Mr. U.B. Sahay

JPL ENGINEERS AT BHEL (TENTATIVE)

Discussion on total design and initiation of Phase II activities	2 weeks from 11/30/81	Mr. Royal Harrison Dr. R.R. Levin Mr. W.J. Carley Mr. W.A. Owen Mr. J.A. Newnham Mr. G.E. Nichols, Jr Mr. H. Bank

07/09/81

SALOJIPALLY PROJECT
SOLAR THERMAL SYSTEM

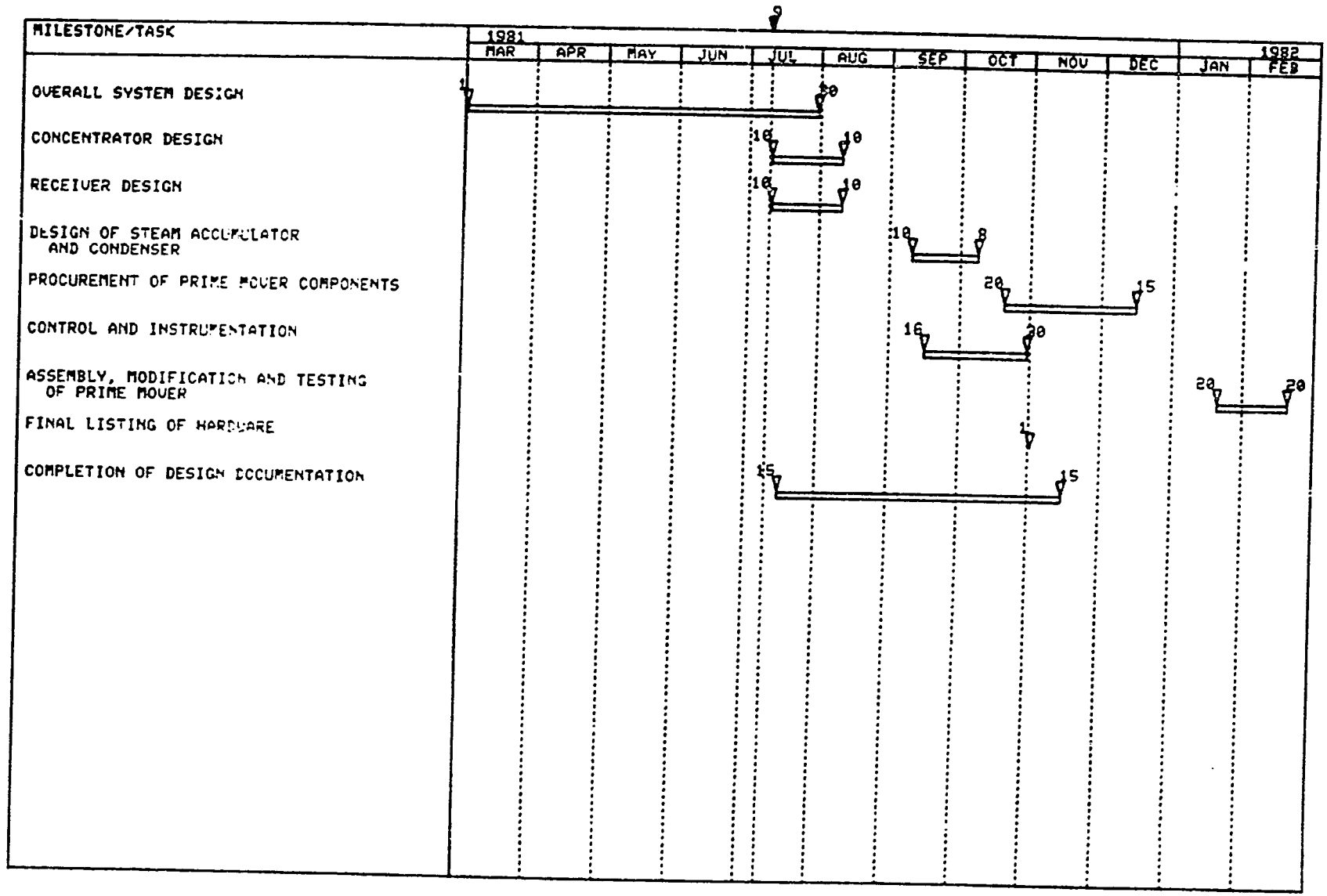

07/09/81

SALOJIPALLY PROJECT
MANPOWER EXCHANGE SCHEDULE

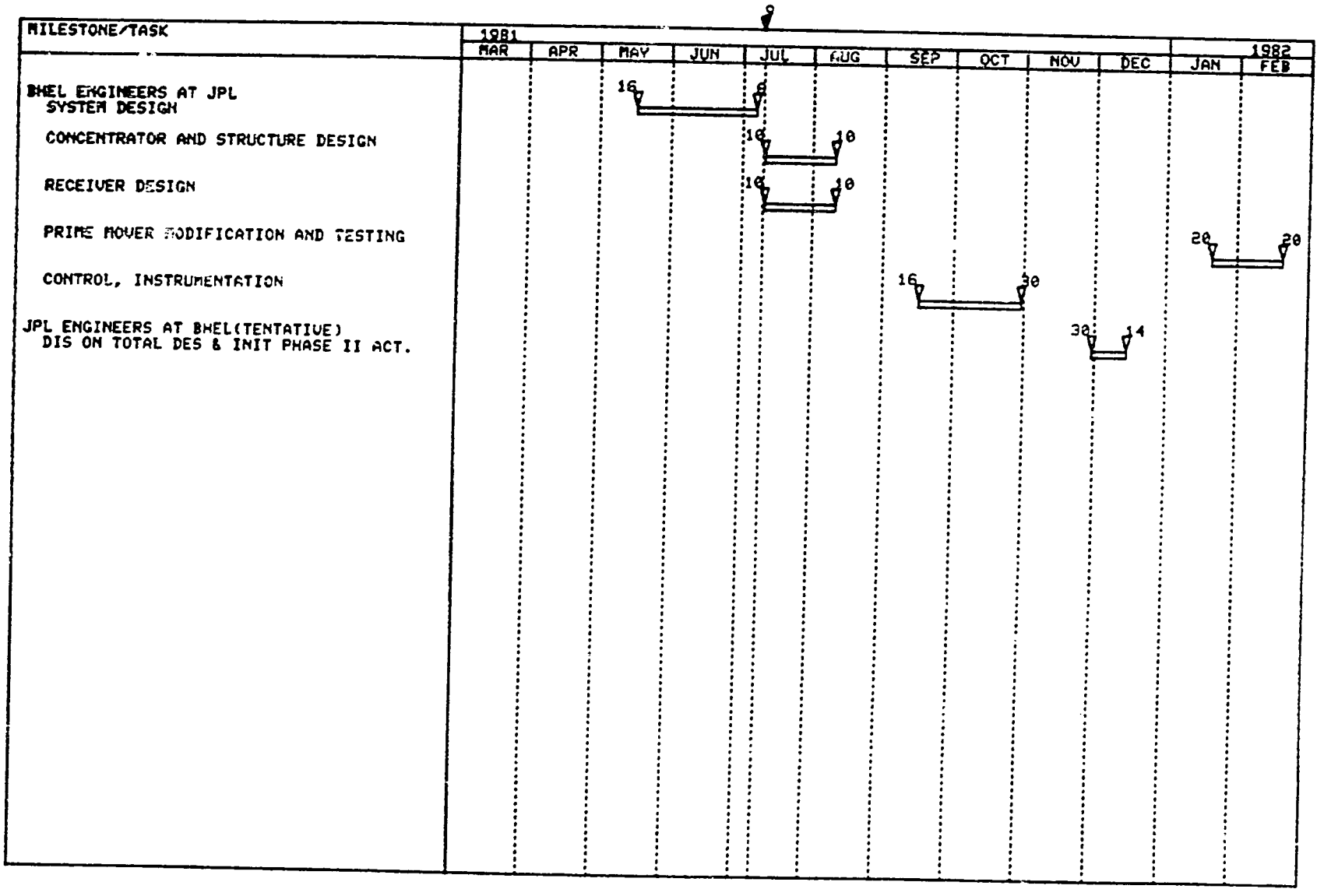

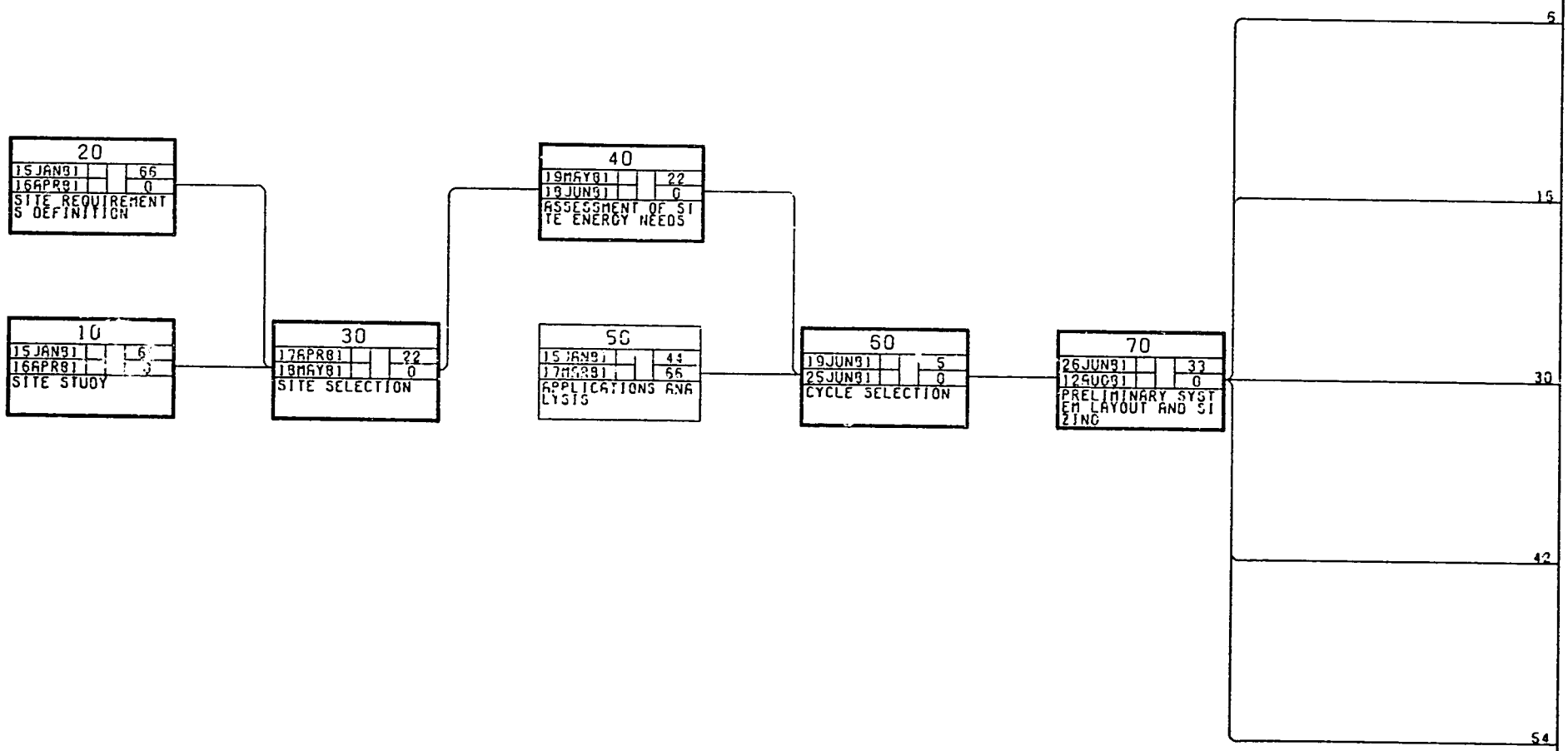

MODE O/FE	RUN JUL 15, 1981
PLOT "SALS "	PAGE 1 SHEET 1 / 3

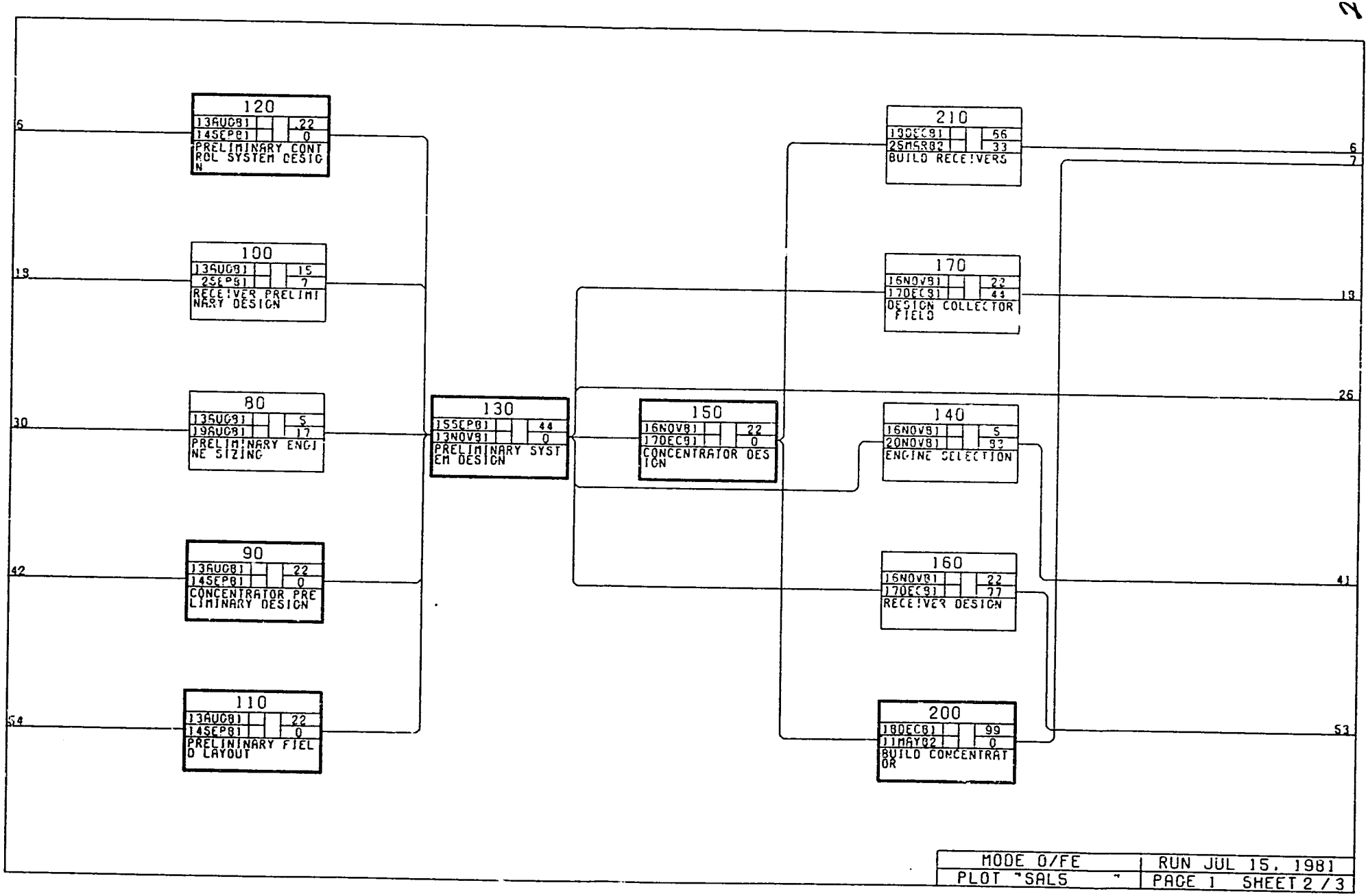
120
13AUG81 22
14SEP81 0
PRELIMINARY CONTROL SYSTEM DESIGN
100
13AUG81 15
25SEP81 7
RECEIVER PRELIMINARY DESIGN
80
13AUG81 5
19AUG81 17
PRELIMINARY ENGINE SIZING
90
13AUG81 22
14SEP81 0
CONCENTRATOR PRELIMINARY DESIGN
110
13AUG81 22
14SEP81 0
PRELIMINARY FIELD LAYOUT
130
15SEP81 44
13NOV81 0
PRELIMINARY SYSTEM DESIGN
150
16NOV81 22
17DEC81 0
CONCENTRATOR DESIGN
210
13DEC81 66
25MAR82 33
BUILD RECEIVERS
170
16NOV81 22
17DEC81 44
DESIGN COLLECTOR FIELD
140
16NOV81 5
20NOV81 93
ENGINE SELECTION
160
16NOV81 22
17DEC81 77
RECEIVER DESIGN
200
18DEC81 99
11MAY82 0
BUILD CONCENTRATOR
6
19
30
42
54
6
7
19
26
41
53
MODE 0/FE
PLOT "SALS"
RUN JUL 15, 1981
PAGE 1 SHEET 2 / 3

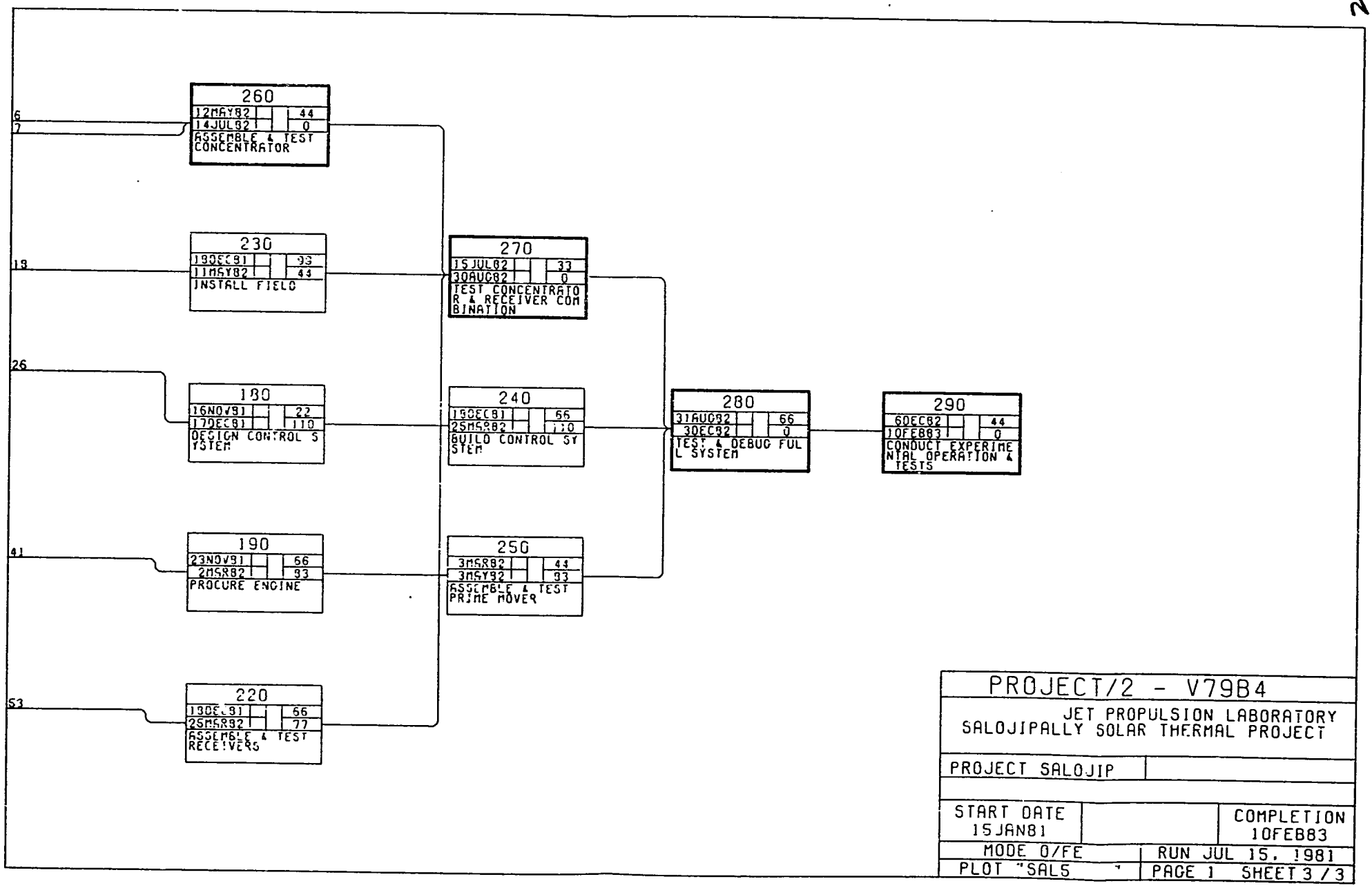

PROJECT/2 - V79B4

JET PROPULSION LABORATORY
SALOJIPALLY SOLAR THERMAL PROJECT

PROJECT SALOJIP

START DATE 15JAN81		COMPLETION 10FEB83
MODE O/FE	RUN JUL 15, 1981	
PLOT "SAL5 "	PAGE 1 SHEET 3 / 3	

ZONE 1

BHEL RESPONS

IBILITY

ZONE 3

JOINT RESPON

SIBILITY

ZONE 4

TBD REPONSIB

ILITY

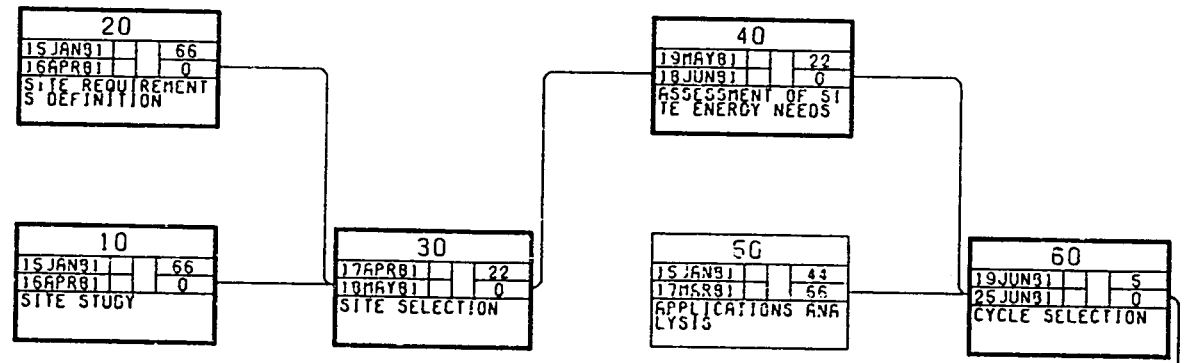

MODE O/FE	RUN JUL 15, 1981
PLOT "SAL6 "	PAGE 1 SHEET 1 / 4

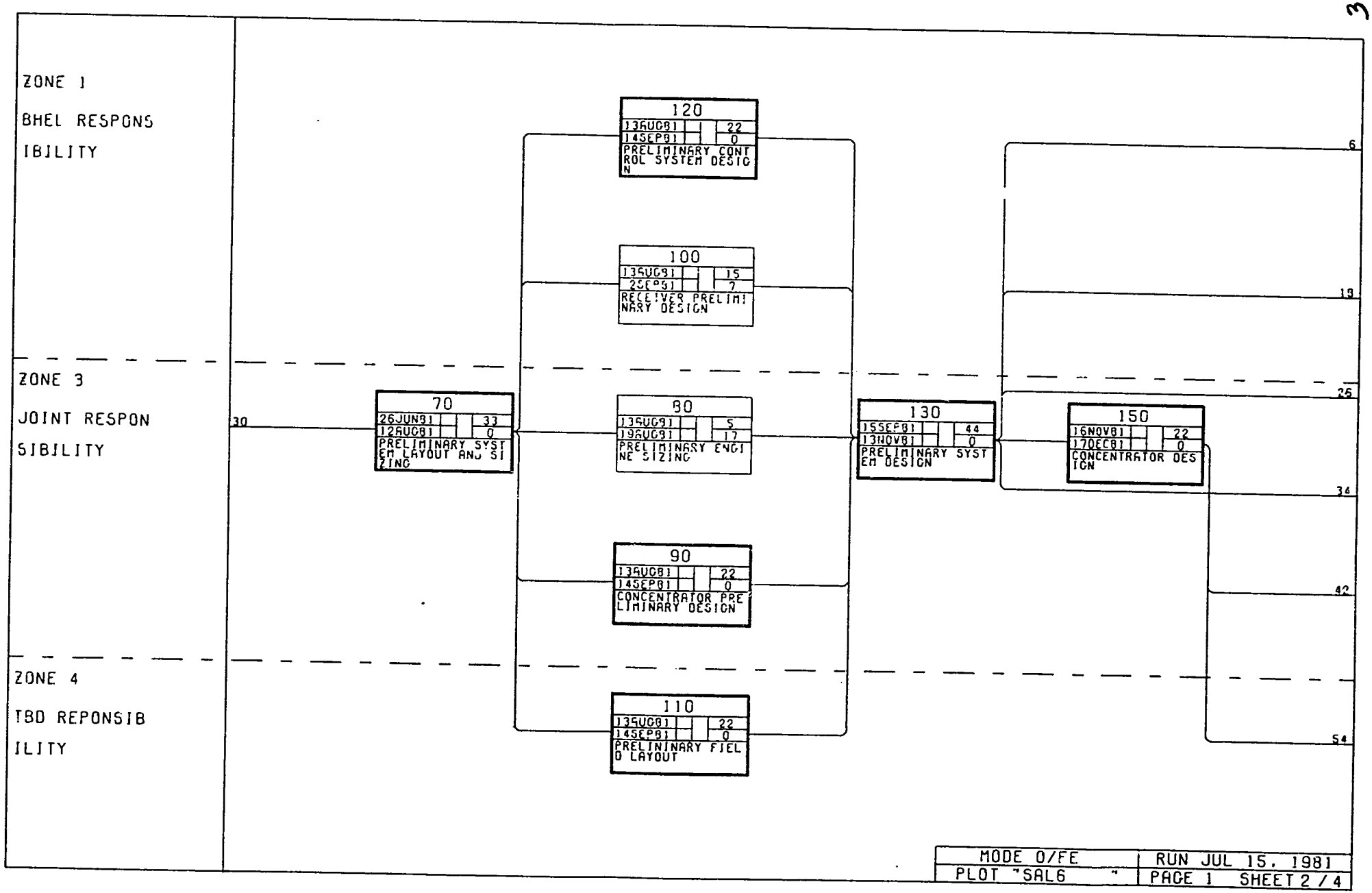
ZONE 1
BHEL RESPONS
IBILITY
ZONE 3
JOINT RESPON
SIBILITY
ZONE 4
TBD REPONSIB
ILITY
30
70
26JUN81 33
12AUG81 0
PRELIMINARY SYST
EM LAYOUT AND SI
ZING
120
13AUG81 22
14SEP81 0
PRELIMINARY CONT
ROL SYSTEM DESIG
N
100
13AUG81 15
25SEP81 7
RECEIVER PRELIMI
NARY DESIGN
80
13AUG81 5
19AUG81 17
PRELIMINARY ENGI
NE SIZING
90
13AUG81 22
14SEP81 0
CONCENTRATOR PRE
LIMINARY DESIGN
110
13AUG81 22
14SEP81 0
PRELIMINARY FIEL
D LAYOUT
130
15SEP81 44
13NOV81 0
PRELIMINARY SYST
EM DESIGN
150
16NOV81 22
17DEC81 0
CONCENTRATOR DES
IGN
6
18
26
34
42
54
MODE O/FE
PLOT "SAL6 "
RUN JUL 15, 1981
PAGE 1 SHEET 2 / 4

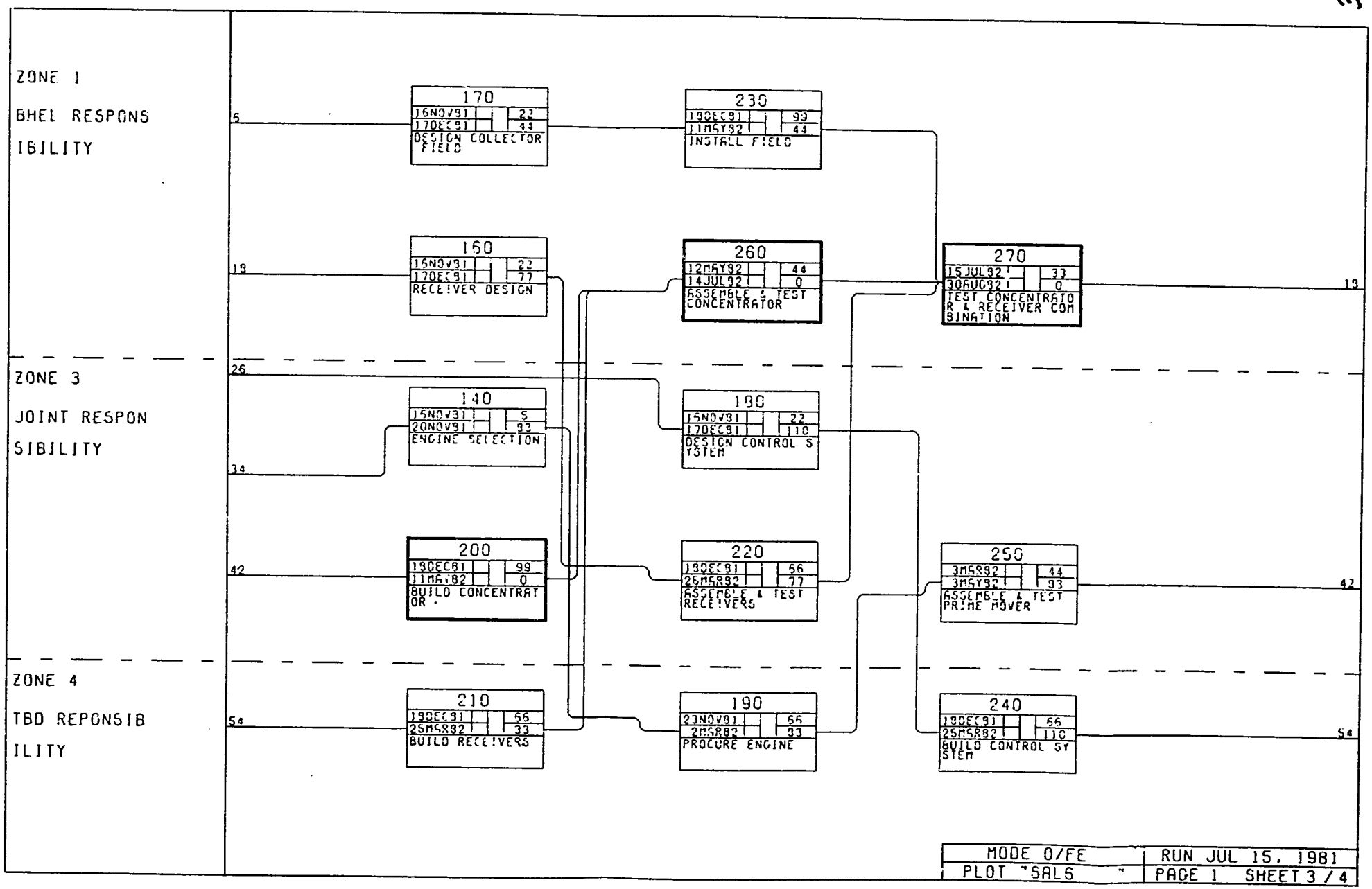
ZONE 1
BHEL RESPONS
IBILITY
ZONE 3
JOINT RESPON
SIBILITY
ZONE 4
TBD REPONSIB
ILITY
170
16NOV81 22
17DEC81 44
DESIGN COLLECTOR FIELD
160
16NOV81 22
17DEC81 77
RECEIVER DESIGN
140
16NOV81 5
20NOV81 33
ENGINE SELECTION
200
13DEC81 99
11MAR82 0
BUILD CONCENTRAT OR
210
13DEC81 56
25MAR82 33
BUILD RECEIVERS
230
13DEC81 99
11MAY82 44
INSTALL FIELD
260
12MAY82 44
14JUL82 0
ASSEMBLE & TEST CONCENTRATOR
180
16NOV81 22
17DEC81 110
DESIGN CONTROL S YSTEM
220
13DEC81 66
26MAR82 77
ASSEMBLE & TEST RECEIVERS
190
23NOV81 66
2MAR82 33
PROCURE ENGINE
270
15JUL82 33
30AUG82 0
TEST CONCENTRATO R & RECEIVER COM BINATION
250
3MAR82 44
3MAY82 33
ASSEMBLE & TEST PRIME MOVER
240
13DEC81 66
25MAR82 110
BUILD CONTROL SY STEM
5
19
26
34
42
54
19
42
54
MODE O/FE
PLOT "SAL6 "
RUN JUL 15, 1981
PAGE 1 SHEET 3 / 4

ZONE 1

BHEL RESPONS

IBILITY

ZONE 3

JOINT RESPON

SIBILITY

ZONE 4

TBD REPONSIB

ILITY

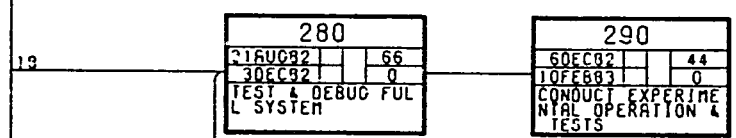

PROJECT/2 - V79B4		
JET PROPULSION LABORATORY SALOJIPALLY SOLAR THERMAL PROJECT		
PROJECT SALOJIP		
START DATE 15JAN81		COMPLETION 10FEB83
MODE O/FE	RUN JUL 15, 1981	
PLOT "SAL6 "	PAGE 1 SHEET 4 / 4	

APPENDIX A
DETAILS OF SELECTED SITE AND APPLICATIONS ANALYSIS

1. INTRODUCTION

In selecting the rural site for installation of the proposed solar energy system, several factors have to be taken into account:

- Present energy usage pattern and quantum.
- Energy needs of the community and their priorities.
- Energy potential at the selected site - solar, wind, bio-mass.
- Other climatological factors such as rainfall, temperature, humidity, cloudiness, etc.
- Social consideration such as living pattern, attitude, and economic status of the community.
- Logistics for implementation of the system.

2. DETAILS OF THE SELECTED COMMUNITY

Based on the factors stated above, several rural sites were studied for selection as the site for implementation of the project. Details of the selected site are given below:

Selected village name :	Salojipally
Geographical location:	18° N. latitude 78° E. longitude
Situation:	Andhra Pradesh State 100 KM from Hyderabad
Status of electrification:	unelectrified
Population:	424
Occupation:	farming, labor
Number of dwellings:	71
Total land under cultivation:	465 hectares
Land covered by irrigation:	60 hectares
Land not covered by any irrigation:	105 hectares
Mode of irrigation:	monsoon fed tanks- under gravity flow/wells
Crops grown:	rice, sorgham
Number of diesel pump sets:	3
Domestic lighting:	kerosene oil lamps
Cooking:	firewood
Drinking water:	lifting manually from open wells

3. ENERGY NEEDS AND APPLICATIONS

The community is primarily agarian therefore, the energy requirement is predominantly for irrigation. The daily energy requirement of the community and the respective applications are tabulated below:

APPLICATIONS	DAILY ENERGY NEED
Irrigation for non-irrigated land	386.0 KWH
Domestic lighting	9.5 KWH
Potable water	1.0 KWH
Cottage industry (rice mill)	18.5 KWH
Community facilities, e.g., TV, radio, etc.	0.5 KWH
Street lighting	2.5 KWH

4. ENERGY POTENTIAL

The selected site is situated in a semi-arid zone at 18 North latitude where the solar insolation is fairly good throughout the year except in the monsoon period of about three months. The average annual direct solar radiation is 500 watts/m^2. Table 1 provides the direct solar insolation data for each month during different hours of the day.

The wind regime at the selected site is rather low, the annual average wind speed is 10 KMPH. There is a possibility of utilizing bio-mass energy available in and around the community. The quantity of bio-mass available within the village is 850 kg/day.

5. APPLICATIONS ANALYSIS

A large percentage of the cultivated land depends on monsoon rains. The land ownership is uniformly distributed and the community has experience with mechanized irrigation such as diesel engine operated pumps. Therefore, the primary application of energy from the proposed system will be for the supply of water for irrigation. Such an application is also in consonance with the energy need priority of the villagers.

It is recognized that the capacity of the envisaged system will not be able to fulfill the total energy needs of the community. Therefore, in deciding the applications of the available capacity of the system, it will be essential to provide energy for other applications, besides the irrigation load, which can be enjoyed by most of the members of the community. Such an approach would be necessary to ensure involvement of the commuity and to maintain amiable social relations within the community.

MONTH	HOUR OF THE DAY - DIRECT RADIATION (WATTS/M^2)								
	8-9	9-10	10-11	11-12	12-13	13-14	14-15	15-16	16-17
January	496	684	742	764	759	720	672	570	399
February	457	638	673	720	729	685	605	521	439
March	437	548	611	665	624	547	509	462	358
April	432	505	551	659	590	554	452	407	280
May	520	631	676	694	674	627	545	421	302
June	212	314	329	296	305	295	247	241	216
July	198	244	248	236	220	188	209	172	211
August	204	216	198	239	232	253	312	279	232
September	368	398	420	458	475	420	412	352	318
October	705	795	849	818	806	759	744	613	449
November	522	648	711	707	709	672	621	541	359
December	460	582	643	715	733	701	701	635	594

Table 1.

MONTHLY AVERAGE DIRECT SOLAR INSOLATION DATA
(NORMAL TO REFLECTOR SURFACE)

APPENDIX B
CEL TOUR OF JPL PV FACILITIES AND DISCUSSIONS WITH JPL PERSONNEL

The objective of this activity was to acquaint CEL members with the relevant PV facilities at JPL and to provide an opportunity to meet and discuss various aspects of PV technologies with JPL personnel.

Dr. Bhattacharya, Mr. Sangal, and Mr. Warlu of CEL were given a tour of the JPL PV laboratory and field testing facilities by Eugene Hendrick of JPL. The tour provided an opportunity for CEL people to see what is available at JPL. These laboratories consist of experimental fabrication, material, and device measurement facilities. Block IV module testing was underway at the time of the visit.

Mr. Warlu and Dr. Bhattacharya conducted extensive discussions with Dr. Kris Koliwad and his colleagues on the status of various elements of the technologies such as silicon material, silicon sheet, and encapsulation materials. Dr. Koliwad also presented an overview of the photovoltaic activities at JPL.

Dr. Bhattacharya and Mr. Sangal visited Dr. R. Ross to discuss the design and reliability aspects of the PV module. Dr. Ross is the manager of the JPL/LSA Project module engineering area. The discussions were very useful in clarifying certain test specifications such as those tailored for accelerated life testing. The module design concepts such as series-parallel interconnects, redundant interconnects, and bypass diodes were discussed. Dr. Ross gave several of his reports. He felt that under the circumstances, there is no need for automatic data acquisition on site. But he did stress the need to take data periodically; at least I-V data and visual inspection.

APPENDIX C
CEL VISITS TO PV MANUFACTURING COMPANIES

The objective of these visits was to provide the opportunity for the CEL personnel to take a first-hand look at production facilities and discuss them with potential module suppliers. The companies visited ranged from a large, automated factory to a small, less automated factory. ARCO Solec belongs to the first category and Solec International belongs to the latter, with Applied Solar Energy Corporation (ASEC) in between.

The ARCO Solar visit at the Chatsworth, California facility was hosted by Dr. Vijaya Kapur, Director of Applied Research. This facility houses all of ARCO's R&D and pilot production. Dr. Kapur presented an overview of ARCO's capabilities and introduced several of his colleagues. ARCO is spending enormous resources toward developing a completely automated high volume production capability. Their production is done at Camarillo, California. The capacity is estimated at 5 MW/yr and expected to go to 30 MW/yr in the next five years. ARCO is developing a totally vertically integrated factory. ARCO's current manpower is about 500.

Solec International, on the other hand, is very small (40 people) and with little or no automation. Mr. Ishaq Shariyar, President of Solec, was quite open and showed their production facility. Their current production level is about 1 MW based on one shift. They have several innovative low-cost processes such as plasma etching of back and edges of the diffused wafers, front/back screen printing (they use PVB for encapsulation and they have several homemade assembly jigs). They buy wafers from Monsanto (semiconductor industry rejects) and utilize a proprietary reject reclamation scheme. Their production mode appears ideal for the Indian situation. It can be easily sealed up. Mr. Robert Brown, their Marketing Manager, also participated in the discussion. They have been recently acquired by Pilkington of Great Britain (80%). Solar is very much interested in joint ventures. They have one ready to start in Italy. They market cells, modules, and systems.

Dr. Bhattacharya and Mr. Sangal visited ASEC. Dr. Peter Iles was the host. ASEC is currently dominating the concentrator cell market. They are still lagging behind in capturing the flat plate module market.

Overall, these visits were very useful to the Indian team. Many other visits are planned. Dr. Bhattacharya, Mr. Sangal, and Mr. Warlu will visit Westinghouse to discuss their Web ribbon technology and advanced modules; Mobil Tyco to discuss their EFG ribbon technology and EFG based advanced modules; Crystal System, Inc. to discuss the HEM ingot process; and HAMCO to discuss advanced C7 equipment. Mr. Warlu will also visit Silicon Technology Corp. to discuss their wafering machines. All these companies are leaders in specific advanced technologies.

APPENDIX D
BHEL VISITS TO JPL AND OTHER FACILITIES

Dr. N.K. Giri	Edwards Test Station
Mr. K.A. Khan	Edwards Test Station Accurex Corporation, San Jose US AID, Washington Sanders, Nashua, NH
Mr. T.K. Mukherjee	Edwards Test Station Omnium-G, Anaheim Acurex Corporation, San Jose US DOE, Washington US AID, Washington Sanders, Nashua, NH