PN-AAW-833
ISN=49543
60

REGIONAL STUDY ON

IRRIGATION SERVICE FEES

FINAL REPORT

VOLUME 1

ASIAN DEVELOPMENT BANK

Regional Study on Irrigation Service Fees

Final Report

by

Leslie E. Small, Marietta S. Adriano and Edward D. Martin

Volume 1

Executive Summary

Main Report

Annex 1 - Supporting Tables

Annex 2 - Terms of Reference

Volume 2

Annex 3 - Financing Irrigation Services in Indonesia

Annex 4 - Financing Irrigation Services in Korea

Annex 5 - Financing Irrigation Services in Nepal

Annex 6 - Financing Irrigation Services in the Philippines

Annex 7 - Financing Irrigation Services in Thailand

Annex 8 - Financing Irrigation Services in Other Countries: A Literature Review

A Report Submitted to the Asian Development Bank by the International Irrigation Management Institute under the ADB Technical Assistance for a Regional Study on Irrigation Service Fees

January 1986

EXECUTIVE SUMMARY

Regional Study on Irrigation Service Fees:

Final Report

by

Leslie E. Small, Marietta S. Adriano and Edward D. Martin

CONTENTS

1. Introduction i

2. Framework for Evaluating Irrigation Financing Policy ii

3. Findings from the Five Study Countries vi

4. Conclusions xv

5. Recommendations xix

A Report Submitted to the Asian Development Bank by the International Irrigation Management Institute under the ADB Technical Assistance for a Regional Study on Irrigation Service Fees

January 1986

EXECUTIVE SUMMARY

Regional Study on Irrigation Service Fees:

Final Report

1. Introduction

1-01 This report presents the findings of a study undertaken in 1985 by the International Irrigation Management Institute (IIMI) in conjunction with the Asian Development Bank's Technical Assistance for a regional study on irrigation service fees.

1-02 The Technical Assistance document (ADB 1985b) anticipates a gradual decline in the rate of investment in new irrigation projects among countries in East and Southeast Asia. The consequent shift toward greater emphasis on better operation and maintenance (O&M) of completed projects implies a greater need for internally generated funds. "The raising of resources . . . through irrigation service fees, land taxes, or other cost recovery measures, therefore becomes a matter of urgent and critical importance" (p 1).

1-03 The Technical Assistance document recognizes that such cost recovery measures may involve conflicting objectives. "Thus, there is a need to deal with cost recovery in the broader context of efficiency and equity and to devise an operationally feasible and optimal level and pattern of charges in the context of the specific circumstances of different countries" (p 2).

1-04 At the Regional Seminar on Irrigation Management sponsored by the Bank in 1979, it was concluded that appropriate cost recovery mechanisms should be established at levels which permit recovery of at least the entire costs of O&M. While there is general acceptance of this principle, social, political, cultural and administrative considerations often limit its implementation. "The result has been one of inadequate financial resources available for O&M . . . causing less than optimal maintenance of the systems and poor performance of irrigation projects" (p 4).

1-05 The technical assistance study was thus undertaken by IIMI "to review the rationale and procedures of cost recovery in irrigation projects in selected DMCs" (p 4). The study was undertaken from June through December 1985. It involved brief field visits to review cost recovery polices and experiences in Indonesia, Korea, Nepal, Philippines and Thailand, and a review of the literature dealing with conceptual issues, empirical studies and experiences in other nations with irrigation cost recovery. The objective of this study report is to provide information which can assist the Bank and its member countries in developing appropriate guidelines and policies relating to cost recovery mechanisms such as irrigation service fees, with emphasis on how such mechanisms can improve the performance of irrigation systems.

2. Framework for Evaluating Irrigation Financing Policy

2-01 As indicated in the Technical Assistance document, a narrow focus on cost recovery is an inadequate framework from which to undertake an analysis leading to policy prescriptions for optimal levels and patterns of water charges. A broader and more suitable framework must incorporate both efficiency and equity considerations. Throughout this report, the term "irrigation financing" is used to indicate this broader perspective.

2-02 The Importance of Institutional Arrangements. Irrigation financing policy is closely linked to four processes: allocating resources to irrigation; utilizing these resources to implement irrigation services; obtaining resources from irrigation beneficiaries; and controlling the resources obtained from irrigation beneficiaries. A narrow focus on cost recovery ignores all but the third of these processes.

2-03 The effects of financing policy are greatly influenced by how responsibilities for these four processes are organized. The key distinction is between situations of (full or partial) financial autonomy and those of financial dependence. With financial autonomy, an irrigation agency has at least partial responsibility for all four processes. In particular, it has control over the resources which it obtains from the water users, and thereby over the allocation of all or a major portion of the resources devoted to irrigation O&M. With financial dependence, an irrigation agency has no control over any funds collected from the water users, and is thus dependent on resources allocated to it through the general government budgetary process.

2-04 Objectives of Irrigation Financing Policy. Potential objectives of irrigation financing policy include: (1) improving the performance of irrigation systems (a) by enhancing the effectiveness of operation of the irrigation facilities -- either through the increased availability of funds for O&M, through greater accountability of irrigation managers to the water users, or through encouraging greater cooperation and involvement of the water users in O&M -- and/or (b) by increasing the efficiency of water use by individual users); (2) improving irrigation investment decisions; (3) improving the fiscal position of the government; and (4) achieving a more equitable distribution of income. These objectives may be at times complementary and at times conflicting.

2-05 Irrigation Financing Mechanisms. Irrigation financing mechanisms include water prices, irrigation service fees, taxes, implicit taxation and secondary income. Under a system of water prices, payments depend on voluntary purchase decisions by water users. Examples include charges based on users' requests regarding either the volume of water to be delivered, the length of time of delivery or the number of irrigations. Irrigation service fees are compulsory charges imposed upon users of irrigation on some basis fairly closely related to the amount of the services provided. A common example is a flat charge per ha of land irrigated. Because both water prices and irrigation service fees charge for water on a basis directly linked to irrigation, they are direct financing mechanisms. Taxes are compulsory

charges levied on individuals with no direct reference to any services provided. An example is a general tax on land. Implicit taxation occurs when government policies cause domestic prices for agricultural products to be below world market levels, or the prices of agricultural inputs such as fertilizer to be above world levels. Secondary income results from institutional arrangements which permit an irrigation agency to obtain revenues from sources other than charges levied on water users. Taxes, implicit taxation and secondary income are indirect financing mechanisms.

2-06 Assessment of the effects of financing mechanisms. The potential of these five types of financing mechanisms to promote each of the objectives of financing policy is summarized in Table ES-1. A distinction is made between the expected effects under an institutional framework of financial autonomy and those likely to prevail under financial dependence.

2-07 Financing mechanisms directly lead to more efficient operation of irrigation facilities only under conditions of financial autonomy. With financial autonomy, funds obtained from water users from either irrigation service fees or water prices, as well as funds earned from secondary sources of income can remain with the irrigation implementing agency to be used for O&M. All of these mechanisms can thus increase the amount of funding available for O&M. Accountability of irrigation managers to water users may also be enhanced by either irrigation service fees or water prices established within the context of financial autonomy, because managers of irrigation systems realize that the financial viability of their organization depends on funds which must be collected from the water users. Financing through secondary sources of income provides no such incentive for increased accountability, and could even lead to reduced accountability if it significantly reduced the dependence of the irrigation managers on payments by water users. Increased cooperation and involvement of water users in irrigation O&M may also be encouraged by either water prices or irrigation service fees in situations of financial autonomy, since such involvement can directly affect the level of payments which the users make.

2-08 A frequently cited objective of a financing policy that incorporates a charge for water is that it will lead to more efficient use of water by the individual farmers. But of all the financing mechanisms, only water pricing has the potential to do this, because it is the only mechanism that links a water user's total cost for water with his water-use decisions. (Irrigation service fees which are differentiated by type of crop may influence water use through their effect on a farmer's cropping decision. But the importance of such an effect on the total efficiency of water use is likely to be negligible.)

2-09 Although water prices theoretically have the potential to encourage more efficient use of water, two practical limitations to the achievement of this potential exist. First, a pre-condition for the establishment of an effective system of price-induced "demand control" at the individual farm level is that the irrigation project have the capability for a high degree of "supply control" to individual farms. In the absence of this capability, it will not be possible to enforce the requirement that farmers pay for the

Table ES-1. Summary of Potential Consequences of Irrigation Financing Mechanisms in Relation to Financing Objectives

Financing Objectives	Institutional Context and Financing Mechanisms						
	Financial Autonomy: Funds controlled by irrigation agency			Financial Dependence: Funds controlled by non-irrigation agency; irrigation agency financially dependent on government budget allocation			
	Irrigation Service Fees	Water Prices	Secondary Income	Irrigation Service Fees	Water Prices	Taxes	Implicit Taxation
1. Improve Irrigation Performance							
a. More efficient operation of irrigation facilities							
- Improve funding of O&M	yes	yes	yes	no	no	no	no
- Improve managerial and financial accountability	yes	yes	no	no	no	no	no
- Improve involvement of water users	yes	yes	no	no	no	no	no
b. More efficient utilization of water	no	yes	no	no	yes	no	no
2. Improve Irrigation Investment Decisions	?	?	no	no	no	no	no
3. Improve Fiscal Position of Government	yes	yes	?	yes	yes	yes	yes
4. More equitable income distribution	?	?	?	?	?	?	?

water in accordance with the amounts used. But once this capability is achieved, much of the commonly observed inefficiency in the use of water could be eliminated simply through the exercise of this supply control. Supply control can reduce wastage of water that occurs not because farmers are excessive in their demands, but because water flows through uncontrolled channels and ungated turnouts onto fields and into drainage channels. Supply control can also be used to impose an appropriate degree of water scarcity on farmers throughout the irrigation system, giving water a high opportunity cost, which encourages farmers to make many of the same adjustments they would make under a system of water prices. The remaining efficiency gains from the actual implementation of a system of water pricing would thus be much less than commonly anticipated.

2-10 Second, the costs of implementing farm-level water pricing in irrigation systems serving large numbers of small farmers, and particularly in systems for which rice is the dominant crop, with water frequently flowing more or less continuously to many of the farm turnouts, is likely to be very high. In particular, the establishment of a reliable system of water measurement at the individual farm level is likely to prove technically difficult, administratively unmanageable, and economically costly. It is questionable if the economic gains from the implementation of such a pricing system would exceed the costs of implementation.

2-11 To avoid the difficulties and costs associated with implementing water pricing on a farm-level basis, water pricing might be implemented at a higher level within the irrigation system. Such "water wholesaling" would involve delivery of water by an irrigation agency to the head of a lateral or tertiary canal at the request of an organization representing the farmers served by this canal. Payment would be made by this water users' organization, which would also be responsible for the distribution of water among the individual users. Although this would reduce the costs of implementation, it also tends to reduce the incentive of the individual water users to use water efficiently. The extent to which this incentive is reduced would depend both on the size of the group of farmers served by a single delivery point, and on its social cohesiveness.

2-12 The second financing objective listed in Table ES-1 is to improve irrigation investment decisions. For this to occur, an institutional linkage is needed between the investment decision process and the financial viability of the agencies making the decisions. Financing mechanisms operating in the context of financial dependence will not result in improved investment decisions because of the absence of this institutional linkage. In cases of financial autonomy, there is some possibility that either irrigation service fees or water prices could improve investment decisions at the national level. But this will occur only if the autonomous irrigation agency has some responsibility for the repayment of at least a portion of the capital costs. In many cases, financial autonomy is limited to autonomy for normal O&M, with capital costs provided by direct government subsidies. In such situations, neither irrigation service fees nor water prices will provide incentives for improved investment decisions. International lending agencies also play key roles in the investment decision process. A financial linkage making the

repayment of a portion of the loans of these agencies dependent on the amounts of funds collected from irrigation service fees or water prices could be expected to enhance the quality of their investment decisions.

2-13 The third objective of irrigation financing is to improve the fiscal position of government. In general, all the financing mechanisms will meet this objective, assuming that the amount of funds collected exceeds their cost of collection. The only questionable case is that of secondary income. In situations where the secondary income is due to special subsidies or institutional arrangements which permit an autonomous irrigation agency to earn income that might otherwise have gone to another government agency, the overall fiscal position of the government will not be improved.

2-14 The fourth objective listed in Table ES-1 is more equitable income distribution. Whether a financing mechanism supports this objective depends on the particular circumstances involved and on the level of payments required. If the water users' income is extremely low, any collection of funds from them may lead to a less equitable distribution of income. But to the extent that water users have received more benefits than other groups in the economy as a result of irrigation investments, financial measures which capture part of these benefits to generate funds to undertake activities that benefit these other groups may be seen as making the distribution of income more equitable.

3. Findings from the Five Study Countries

3.1 Institutional Context

3-01 The primary institutional context for financing policies in both Korea and the Philippines is that of financial autonomy. In Korea, irrigation O&M are implemented by decentralized and financially semi-autonomous Farmland Improvement Associations (FLIAs), while the Philippines has a centralized semi-autonomous implementing agency, the National Irrigation Administration (NIA). In Indonesia, irrigation financing at the tertiary level also involves financially autonomous water users' associations.

3-02 For Nepal and Thailand, and at the main system level in Indonesia, irrigation financing occurs in the institutional context of financial dependence. The principal implementing agencies are the Department of Irrigation, Hydrology and Meteorology (DIHM) in Nepal; the Royal Irrigation Department (RID) in Thailand; and the Directorate General for Water Resources Development (DGWRD) along with the Provincial Departments of Public Works in Indonesia. All of these agencies are financially dependent on annual budget allocations from the central government.

3.2 Financing Mechanisms

3-03 The principal direct financing mechanism used in the countries studied is that of area-based irrigation service fees. In Korea, with its system of decentralized semi-autonomous implementing agencies, the amounts charged vary

among irrigation projects. Within any given project, the charge is differentiated both according to differences in benefits received (eg., land previously irrigated is typically charged less for project repayment than land newly irrigated by the project) and according to the cost of providing services (eg., land irrigated with pumped water is charged more for O&M than other land in the same project which is irrigated by surface water).

3-04 By contrast, Nepal and the Philippines, with their more centralized implementing agencies, tend to have little differentiation in the charges for irrigation services. Except for cases of pump irrigation, one or two uniform rates tend to apply to projects throughout the country. Within a given project, the only differentiation relates to the number, and in some cases the type, of irrigated crops grown. In the Philippines, separate rates are charged for wet season and dry season irrigation. It is also common to charge a lower rate for upland crops than for rice. In Nepal, the charges are sometimes, but not always, differentiated on the basis of the number of crops grown.

3-05 In addition to the direct financing mechanisms noted above, water pricing can be found in the case of a few small pump projects in Nepal. There may also be some water pricing used in small private pump irrigation projects in the region. With these few exceptions, however, water pricing is not used in the study countries.

3-06 In general, Indonesia and Thailand have no direct financing mechanisms to cover any of the cost of irrigation services provided by the government. In Indonesia, however, tertiary O&M services are the responsibility of water users either through the village government structure or through water users' organizations. Thus from the point of view of the central government, these services are directly and completely financed by the water users. Fees charged by the local autonomous water-users' groups for tertiary O&M are generally established on the basis of the area irrigated, with separate rates per ha fixed for each season. Given the decentralized and autonomous nature of these associations, the rates vary considerably among projects. In many case, separate rates for cash payment, for payment in kind, and for labor contributions may exist. Thailand is also experimenting, in areas that have undergone land consolidation, with a similar arrangement of decentralized decisions regarding charges for the O&M of tertiary facilities constructed under the land consolidation program. Within certain limits established by guidelines from the central government, each local water-users' group is able to decide on the charge to be levied on its members. These charges are calculated on an annual basis according to the area irrigated, with no distinction between cropping seasons.

3-07 Indirect financing mechanisms are important in all five countries. Indonesia and Nepal both have a land tax, with per ha taxes dependent on assessments based on the productivity of the land. Considering that much of the net benefits of irrigation are likely to be capitalized into land values, such a tax has the potential to relate payments closely to the benefits received from irrigation; however, difficulties with keeping assessments updated to reflect changes in productivity brought about by irrigation weaken

the link between tax payments and irrigation benefits in both countries. But when compared with many other indirect financing methods, the land tax has the advantage of creating less distortion in the economy, since it is a tax on a relatively fixed production input with few alternative uses.

3-08 For Thailand implicit taxation exists through an artificially low domestic price for rice resulting from a system of taxes and levies on rice exports. This creates a burden on rice farmers proportional to the amount of rice sold. To the extent that farmers with irrigation sell more rice than farmers without irrigation, this imposes a greater burden on the farmers benefitting from irrigation. As with the land tax used in Indonesia and Nepal, the link between irrigation benefits and the tax burden is weak. The amount of rice which a farmer sells depends not simply on irrigation, but also on factors such as farm size and cropping patterns. Furthermore, since the tax directly affects the price of only one product, a variety of distortions in both production and consumption are created that may have undesirable efficiency consequences in the economy.

3-09 Both Korea and the Philippines supplement funds obtained through irrigation service fees with secondary income earned by the irrigation agencies. In Korea, the FLIAs are able to generate revenues from a variety of sources such as interest on deposits, equipment rental, sale of fishing rights and sale of water for non-irrigation purposes. In the Philippines, the sources of NIA's secondary income include equipment rental, interest on construction funds held on deposit, and management fees which NIA charges to supervise construction of foreign-funded projects.

3.3 Costs of Irrigation

3-10 Capital Costs. Although capital costs of irrigation vary widely among projects within each of the five study countries, there is a general similarity in the orders of magnitude of these costs for Indonesia, Nepal, Philippines and Thailand, with large projects typically costing between $1,500 and $3,000 per ha. Capital costs in Korea are much higher, with a typical range for large projects being from $8,000 to $11,000 per ha.

3-11 Operation and Maintenance Costs. O&M costs also vary considerably among projects within each of the five countries. Typical ranges are from $10 to $35 per ha for Indonesia, Nepal, Philippines and Thailand. As with capital costs, the O&M costs for Korea are much higher, typically ranging from $145 to $230 per ha.

3.4 Amounts of Resources Obtained from Financing Mechanisms

3-12 Amounts of Revenues Obtained by Irrigation Organizations. An analysis of the amounts of revenues which irrigation organizations obtain from financing mechanisms must distinguish among (1) the levels of irrigation service fees levied on farmers, (2) the funds actually collected from the irrigation service fees levied, and (3) the amounts which the organizations earn through sources of supplemental income.

3-13 The amounts of the irrigation service fees levied on farmers are best understood in relation to O&M expenditures, with both expressed in amounts per ha. In Indonesia, fees are levied at varying rates by local water users' organizations to cover the full O&M cost of the tertiary facilities. No fee is levied for the cost of main system O&M. The proportion of the total O&M cost thus obtained from fees depends on the relative O&M costs for the main and tertiary systems. In a typical case, the fees could amount to roughly two-thirds of the total O&M cost. In Korea, the average fee levied on the water users in 1983 was equivalent to 93 percent of the average O&M cost. The typical fee in Nepal is approximately 60 percent of the O&M costs, while in the Philippines, the average fee levied in 1984 was equivalent to 121 percent of average O&M costs. Irrigation service fees are not levied in Thailand.

3-14 The amount of funds actually collected from irrigation service fees depends both on the amounts levied and on the rates of collection. Data on rates of collection by the water users' organizations in Indonesia are not available. For Korea, collection rates are very high, averaging over 98 percent in 1983, so that the resources actually collected amounted to about 91 percent of the O&M expenditures. The rate of collection in Nepal is estimated to average about 20 percent, resulting in a total amount collected from irrigation service fees equal to only about 10 percent of O&M costs. This amount does not, however, accrue to the irrigation agency, as it flows into the general revenues of the central government. In the Philippines, an average collection rate of 62 percent results in NIA's total collections being equal to approximately 75 percent of its total costs for O&M.

3-15 In addition to irrigation service fees, irrigation organizations may have supplemental income that can be used to cover O&M expenses. This is the case in both Korea and the Philippines. In Korea, the average amount of supplemental income of the FLIAs is equivalent to 28 percent of the cost of O&M. This brings the total revenues available to the FLIAs to an average of 19 percent more than the total O&M cost, thus allowing the FLIAs to make a modest contribution to the repayment of the capital costs of irrigation. In the case of the Philippines, NIA's supplemental income from equipment rental, pump amortization, interest, management fees and miscellaneous sources amounted to about $36 per ha in 1984. But much of this income is directly attributable to, and spent on NIA's activities in new construction, and could not be made available to support O&M. For example, about 20 percent of this amount is derived from a management fee which NIA charges for managing the construction of new projects. Another 59 percent of the supplemental income comes from interest earnings on deposits, much of which is related to funds held for new construction. In spite of these difficulties in interpreting the data, it is clear that supplemental sources of income available to NIA are an important source of financing O&M. In Indonesia, local water-users' organizations responsible for tertiary system O&M frequently have access to secondary income. In some water-users' associations in Java, for example, officials of the association are paid in the form of the right to cultivate a parcel of irrigated land. In effect, the association owns the rights to the income from the specified parcel of land, and can use it to reduce its needs to collect fees directly from the water users.

3-16 Amounts of Resources Paid by Farmers. In addition to the irrigation service fees discussed above, farmers in Indonesia, Nepal and Thailand also make payments to the government by means of indirect financing mechanisms. Data on the effects of irrigation on the amounts paid for the land tax in Indonesia and Nepal are very limited. For Nepal, the amounts are probably very small. In the case of Indonesia, the effect of irrigation on the amounts paid for the land tax (IPEDA) may be roughly the same order of magnitude as the amounts spent for main system O&M. For Thailand, the implicit tax was estimated to be equivalent to 6.2 percent of the farmgate market price of paddy in 1984. Based on an estimate that irrigation increases production by an average of 1,375 kg of paddy per ha per year, the implied tax on the increased production due to irrigation was about US$ 10 per ha per year, which is equivalent to roughly 39 percent of the average O&M cost of irrigation in Thailand. This level of implicit taxation is considerably lower than the amounts that have prevailed in earlier years, since declines in the world price of rice have caused the Thai government to reduce its levels of export levies. The estimated levels of implicit taxation for 1980 and 1982 are $ 50 and $ 25 per ha, respectively.

3-17 Amounts of Resources Received by Public Agencies. Considering both the government and the various irrigation organizations, the gross amount of resources received is equal to the total amount of resources paid by the farmers, plus supplemental income. To arrive at the net amount of resources obtained, it is necessary to subtract from the gross amount the cost of collecting irrigation fees. Very few data on these costs are available. In Korea, the administrative and accounting procedures do not lend themselves to estimates of collection costs. In the Philippines, total collection costs are reported to be about $ 0.84 per ha, which is equivalent to about 8 percent of actual collections, and about 5 percent of total assessments. In one project in Nepal for which data were available, salaries of individuals directly associated with the administration and collection of irrigation service fees in 1984/85 amounted to 78 percent of the total funds collected. Data on other components of the cost of collection (transportation, allowances, supplies, etc.) were not available. Low collection rates are partially responsible for this high relative cost of collection; however, in the tubewell portion of the project, where collections were 76 percent of the amounts assessed, the cost of the salaries of the field collection staff alone amounted to 43 percent of the amounts assessed, or 32 percent of the amounts assessed. These high collection costs suggest that irrigation service fees have a very small positive impact on the net fiscal position of the Nepalese government.

3.5 Accountability for O&M Expenditures

3-18 In all five countries, systems of upward financial and managerial accountability predominate for irrigation systems receiving government support. In Indonesia, Nepal, the Philippines and Thailand, the accountability is upward to higher levels within the centralized irrigation agency (DGWRD, DIHM, NIA, and RID, respectively). The situation in Indonesia is somewhat more complicated because of the dual lines of accountability extending from the Provincial Public Works Departments to both the provincial

government and to the central government as represented by DGWRD. In Korea, accountability is upward from the semi-autonomous FLIAs primarily to the provincial governments and secondarily to the Ministry of Agriculture and Fisheries.

3-19 Downward financial and managerial accountability to the users of irrigation water occurs in Indonesia with respect to expenditures for O&M at the tertiary level, and in the Philippines in parts of government systems where responsibility for O&M has been turned over to groups of farmers. Downward accountability also is found in communal systems in all of the countries studied.

3.6 Ability of Water Users to Pay for the Cost of Irrigation Water

3-20 A benefit recovery ratio represents a water user's total payments related to irrigation (both direct and indirect) as a proportion of the net benefits of irrigation received prior to deducting such payments. These ratios were estimated under four alternative scenarios for each of the five countries. The scenarios represented current policies and three cases whereby current policies were modified so that irrigation service fees charged to the water users would equal a specified level of the cost of irrigation, with no change in any current indirect financing mechanisms. The three specified levels to which irrigation service fees would be set were (1) equal to full O&M costs; (2) equal to O&M plus full capital costs in situations of moderate investment costs; and (3) equal to O&M plus full capital costs in situations of high investment costs. Because the data necessary to calculate benefit recovery ratios were quite limited, estimates of the ratio of irrigation-related payments to total net returns from irrigated farming, and the ratio of the payments to gross income were also made. Because the latter two sets of estimates generally supported the conclusions drawn from the benefit recovery ratios, the following discussion is limited to the results of the calculations of the benefit recovery ratios.

3-21 Under current policies, the estimated typical benefit recovery ratios are 5 percent for Nepal; 8 percent for Thailand; 10 percent for the Philippines; 8 to 21 percent for Indonesia; and 26 to 33 percent for Korea. Modifying these current policies to equate irrigation service fee assessments to the full cost of O&M results in estimates of 7 percent for the Philippines; 10 percent for Nepal; 27 percent for Thailand; 10 to 27 percent for Indonesia; and 27 to 36 percent for Korea.

3-22 These estimates indicate that in all five countries, whenever there is reasonable irrigation service, the incremental benefits derived from irrigation will be adequate to make possible the full recovery of irrigation O&M costs and still leave the farmers with significant increases in net incomes due to irrigation.

3-23 The ability to pay for O&M costs is, however, greatly affected by national policies affecting agricultural prices. The price which farmers receive for paddy is approximately five times as high in Korea as it is in Thailand. If Korean price policy were changed to allow domestic rice prices

to drop to levels consistent with world market conditions, the estimated average benefit recovery ratios would rise to the range of 58 to 75 percent. This is significantly higher than the estimated currently prevailing ratios in any of the countries, and is a reflection of the fact that O&M costs per ha are much higher in Korea than in the other study countries.

3-24 The benefits of irrigation are typically not great enough to permit the full recovery of O&M plus full capital costs from the water users. Under these scenarios, the estimated benefit recovery ratios are generally from 50 to 150 percent in the situation with a moderate investment cost, and from 100 to 300 percent in the case of the higher investment cost. This is consistent with the findings of the literature review that throughout the world, government assisted irrigation projects involve large subsidies for capital costs.

3.7 Consequences of Financing Policies

3.7.1 Improvement in Irrigation System Performance

3-25 More Efficient Operation of Irrigation Facilities. There is little in the financing mechanisms used in Nepal, Thailand and at the main system level in Indonesia that enhances the efficiency of irrigation management. Because of the centralized nature of the agencies managing irrigation systems, and their financial dependence on the central government, financial procedures are not a means for encouraging either improved managerial performance through feedback from water users, or increased cooperation and participation of water users in O&M.

3-26 Financing mechanisms used for tertiary-level O&M in Indonesia have the potential to encourage both efficiency in management and increased farmer cooperation because of the internal linkages between decisions for mobilizing resources from water users and decisions for utilizing those resources to provide irrigation services. To what extent this potential is realized is uncertain, although individual cases have been studied that appear to exhibit very effective management. The fact that the government is involved in some infrastructure development at the tertiary level might cause water users to develop the perception that responsibility for the tertiary system belongs to the irrigation agency, rather than to the local village or water users' association. If this were to occur, the ability of the association to mobilize resources from the farmers might be impaired seriously.

3-27 The situation in the Philippines differs from the above three countries in one key respect. the implementing agency for irrigation projects (NIA) is responsible for generating a portion of its funds from the users of irrigation services. For many years this responsibility had little impact on NIA's management procedures, because supplemental funding was available through appropriations from the central government. But the reduction and subsequent elimination of these funds have increased NIA's financial autonomy, and thereby its reliance on the funds collected from water users. This has led to management changes designed both to enhance the willingness of water users to pay for irrigation services and to reduce O&M costs.

3-28 Problems with management performance in Korea were reportedly one of the factors leading to the decision in 1961 to bring the FLIAs under government rather than farmer control. To what extent management performance has improved under this revised arrangement is uncertain. A case study of one FLIA led Wade (1982) to conclude that irrigation management was not very efficient. In one sense this lack of efficiency may be appropriate, because water supplies are relatively abundant most of the time. But Wade found that construction of costly "hardware" (canal lining and pumping facilities to supplement water supplies) was a common response to problems that might have been dealt with by improved management. As a result, the failure to achieve efficiency in management is manifested more in high O&M costs than in poor system performance. This may be part of the explanation for the very high O&M costs found in Korea as contrasted with the other study countries. Although one might expect Korea's strong financial reliance on irrigation service fees to generate pressures from water users for an efficient balance between "hardware" and improved management, Wade argues that the combination of strong penalties for non-payment of irrigation fees and lack of farmer involvement in the affairs of the FLIAs severely limits the extent to which water users can effectively influence these decisions.

3-29 More Efficient Utilization of Water. The primary financing mechanisms for government irrigation projects in the five countries studied have virtually no impact on the farmers' efficiency of water use. Irrigation service fees based on the area irrigated are used in Korea, Nepal and the Philippines. Area based charges are also imposed by water users' groups at the tertiary level in Indonesia. These fees provide no incentive for a farmer to economize on the use of water. Water pricing can be found in a few small pump projects in Nepal, but its overall significance in Nepal's financing policies is minimal.

3.7.2 Improved Investment Decisions

3-30 With the possible exceptions of Korea and the Philippines, it is doubtful that the financing policies of the study countries have led to better investment decisions. In Indonesia, Nepal and Thailand, institutional separation of responsibility for investment decisions from control over public funds generated by irrigation makes it unlikely that realistic expectations regarding potential inflows of revenue resulting from irrigation investments play a significant role in investment decisions.

3-31 In the Philippines, recent efforts to make NIA responsible for the repayment of foreign loans incurred for the construction of irrigation projects have created a greater linkage between investment decisions and the flow of resources resulting from those decisions. This has already caused NIA to reconsider the desirability of undertaking new construction involving foreign loans. In the long run, giving NIA responsibility for at least a portion of the repayment of future foreign loans incurred should encourage better investment decisions.

3-32 In Korea there are clear linkages between investment costs and irrigation service fees. To what extent these linkages have contributed to

enhancing the efficiency of investment decisions is difficult to determine. On the one hand, government policy exhibits a clear concern about the level of fees which farmers must pay for irrigation services. Proposed projects which would require an increase in the fees paid are therefore likely to be evaluated more carefully than would be the case if there were no linkage with irrigation service fees. On the other hand, the government has developed a set of special rules breaking the link between investment costs and irrigation service fees in situations where an investment would otherwise result in unacceptably high irrigation service fees. Although this reduces the linkage between additional investment costs and additional farmer payments, it implies increased outflows of government funds in the form of subsidies. To what extent concern over this increased outflow may act to encourage a more careful evaluation of proposed investments is uncertain.

3.7.3 Improved Fiscal Position of the Government

3-33 In all five countries studied, the provision of irrigation services involves a substantial net outflow of public funds. These outflows are generally consistent with broad government policy objectives with respect to rural development and food self-sufficiency.

3-34 For Indonesia, Nepal and Thailand, if only inflows of public funds resulting from direct financing mechanisms are considered, then the full amount of capital cost and part (Indonesia and Nepal) or all (Thailand) of the O&M costs of irrigation are financed by government. When indirect financing mechanisms are also taken into consideration, it is more difficult to make definitive statements. For Indonesia, the additional revenues resulting from IPEDA make it likely that the total inflows are approximately equal to the outflows for O&M. In Nepal, the real value of the land tax has declined substantially over time, so that gross inflows are probably now considerably less than outflows for O&M. In Thailand, rough estimates of the maximum effect of irrigation on public revenues from rice export taxes and levies are 3.0 billion baht in 1980, 1.7 billion in 1982, and 0.7 billion in 1984. The 1980 figure is roughly triple the total amount expended by RID on O&M in that year. For 1982, the estimated revenues are approximately 50 percent greater than total expenditures for O&M, but the estimate for 1984 is only 39 percent of the O&M budget for that year. Indirect revenues generated as a result of irrigation have thus probably frequently exceeded O&M costs, but are now considerably lower than O&M expenditures.

3-35 In the Philippines, linkage between inflows and outflows for O&M associated with NIA's financial autonomy has led NIA to attempt to reduce the <u>net</u> outflow of funds for O&M. NIA has taken steps both to decrease outflows (by measures such as trimming O&M costs and turning certain O&M responsibilities over to the farmers), and to increase inflows by providing better service and increasing incentives for payment.

3-36 In Korea, linkages between inflows and outflows of funds exist for both capital costs and O&M expenditures. Outflows for O&M are fully balanced by inflows of funds to the FLIAs, although a portion of these inflows may represent indirect government subsidies (and thus outflows at a higher level

of government). In the case of capital costs, there is a large net outflow of public funds, equivalent to over 90 percent of total real cost. These funds are channeled through the Ministry of Agriculture and Fisheries (MAF). For the portion of capital costs which are reimbursed by the FLIAs, the inflows accrue to the MAF, thus giving it a vested interest in the revenues of the FLIAs.

3.7.4 More Equitable Income Distribution

3-37 All five countries studied show a net transfer of public funds to the irrigation sector. There is thus a redistribution of income from the general taxpayer to the beneficiaries of irrigation, including not only farmers, but other indirect beneficiaries such as landless laborers and those involved in the marketing of farm inputs and outputs. In the case of Thailand with its rice export tax, there is also a tendency to redistribute income from rice farmers to consumers and to non-rice farmers; and from rice farmers producing under rainfed conditions to rice farmers with irrigation. Indonesia and Nepal, through their land taxes, may cause some redistribution of income from landowners to landless. The land tax of Indonesia (IPEDA) also provides for some redistribution of income from large to small farmers, due to farm-size differentials explicitly incorporated into the tax rates.

3-38 None of the five countries has an explicit policy for levying financial obligations on indirect beneficiaries of irrigation. To the extent that the exporters of rice in Thailand are indirect beneficiaries of irrigation, the Thai export tax system could be considered to be a mechanism to capture some of these benefits; however, exporters are generally able to pass the tax back to the farmers through lower farm prices for rice. Thus the incidence of this tax falls primarily on farmers, rather than on exporters. The Philippines has taxes on rice millers and traders which may capture some of the indirect irrigation benefits earned by these groups. To the extent that the land taxes in Indonesia and Nepal have relatively current market-based assessments on non-agricultural land, a portion of the indirect benefits of irrigation flowing to owners of land in areas where economic activity and wealth generally increase as a result of irrigation may be captured. But if, as seems likely, assessments do not relate closely to current market conditions, then these land taxes probably capture only a very small portion of these indirect benefits.

4. Conclusions

4-01 Irrigation financing methods can be categorized as utilizing (a) water prices (whereby payments vary with demand-determined consumption levels); (b) irrigation service fees (compulsory payments usually based on area); (d) general taxes (compulsory payments levied with no direct reference to irrigation benefits); (d) implicit taxation (manipulation of domestic input and output prices), and (e) supplemental income (income earned by an irrigation agency from sources other than charges on water users).

4-02 Irrigation financing policies must be evaluated in terms of their effects on: (a) irrigation system performance (either through more effective operation of the irrigation facilities or through more efficient water use decisions by farmers); (b) investment decisions; (c) the government's fiscal position; and (d) income distribution among groups in the nation.

4-03 Cost recovery is an inappropriate focus for evaluating irrigation financing policies. The optimal level of cost recovery is neither obvious nor something which can be objectively determined. It is entirely dependent on the optimal level of charges determined with reference to the four types of effects noted in the preceding paragraph. The optimal level of cost recovery from direct beneficiaries could thus range from zero to an amount exceeding 100 percent; however, it is difficult to find examples of large-scale irrigation projects in any part of the world where financing mechanisms that have resulted in cost recovery even close to 100 percent.

4-04 The effects of any specific financing mechanism depend on the institutional arrangements under which responsibilities are established for the four processes of allocating resources to irrigation; implementing irrigation services; collecting resources from beneficiaries; and controlling the resources collected. The key institutional distinction is between (full or partial) financial autonomy, whereby at least partial responsibility for all four processes are combined in an irrigation agency, and financial dependence, whereby the irrigation agency has no control over funds collected from water users, and is thus dependent on resources allocated to it through the general government budgetary process.

4-05 If a financing mechanism is to improve system performance through encouraging better management, a degree of financial autonomy is needed to link the provision of the irrigation services with the collection of and control over resources from the water users. This is more important than the specific nature of the mechanism used to collect from the water users.

4-06 If a financing mechanism is to improve system performance by encouraging the active cooperation and involvement of the water users in O&M, the mechanism must give the farmers a sense of ownership of the irrigation system by giving the water users a clearly defined and accepted financial responsibility for a portion of the capital costs. This implies both an institutional context of financial autonomy, and the involvement of the potential water users in the planning and decision-making process prior to the construction of the project. These institutional arrangements are more important than the specific nature of the financing mechanism.

4-07 If a financing mechanism is to improve investment decisions, an institutional linkage is needed between the investment decision process and the financial viability of agencies (both national and international) responsible for investment decisions. Again, this institutional arrangement is more important than the specific nature of the financing mechanism.

4-08 Irrigation often creates substantial indirect benefits to those who do not engage in irrigated farming. Financing mechanisms specifically designed

to capture a portion of these benefits are seldom found. This may reflect both the difficulty of identifying and measuring such benefits and the feeling that given their rather diffuse and widespread nature, they are most efficiently captured through the existing general tax structure. This provides a rationale for financing a portion of the cost of irrigation from general tax revenues.

4-09 Sophisticated financing mechanisms which utilize water pricing can influence individual water use decisions in accordance with economic efficiency principles. These mechanisms require a higher degree of physical control over the distribution of water than typically prevails in the study countries. They are generally not found anywhere in the world in gravity systems characterized by large numbers of small farmers for whom rice is a predominant crop, as under such conditions these mechanisms are difficult to implement and costly to administer.

4-10 Many of the frequently cited inefficiencies of water use in irrigation projects stem more from inadequate control over the distribution of the supply of water than from failure to regulate demand through prices. Supply control can reduce wastage of water associated with excessive amounts of water flowing through uncontrolled canals and ungated turnouts onto fields and into drainage channels. It may also encourage more efficient use of water at the farm level by imposing a degree of water scarcity on the farmers. A substantial portion of the large efficiency gains which are sometimes expected from a demand-based pricing system would thus most probably be realized by implementation of the pre-requisite supply control.

4-11 The principal direct financing mechanisms used in the study countries all involve irrigation service fees charged at a flat rate per unit area, sometimes differentiated to account for factors such as cropping intensity, and type of crop. Except for a few pump projects, water pricing is not used in the financing of government irrigation in the study countries.

4-12 Both institutional arrangements and perceptions of fairness affect the degree of uniformity of the level of irrigation service fees levied. Financial autonomy in the context of decentralization, as occurs in Korea and at the tertiary level in Indonesia, implies differences in fees among projects. Uniformity of fees is possible in situations of both centralized financial autonomy (as in the Philippines) and centralized financial dependence (as in Nepal). But even where uniformity of fees is possible, perceptions of fairness related to obvious differences in either costs or benefits may lead to differentiation of irrigation service fees among or even within projects. As perceptions of fairness are highly specific to individual situations based on social, cultural, political and historical considerations, no general conclusion can be drawn about the optimal approach in situations where uniform fees are possible.

4-13 When irrigation services are satisfactory, water users have the ability to pay the full cost of O&M in all five study countries. Any attempt to require the water users to pay for more than a small share of the capital costs in addition to O&M appears unrealistic in all five countries.

4-14 In Korea, although the average total amount paid directly by farmers through irrigation service fees is less than the average total cost of O&M, the irrigation service fees have clearly defined portions for O&M and for capital repayment. The FLIAs probably contribute an average of less than 10 percent of the full capital costs (measured at market rates of interest); however, the structure of the irrigation service fees is such that it is clear that the FLIAs -- and through them, the farmers -- are acquiring ownership rights in the irrigation system. Similar arrangements are not found in the financial mechanisms used in the other study countries.

4-15 Irrigation service fees are set in cash in Korea and Nepal, but are denominated in terms of paddy in the Philippines. Individual water users' associations in Indonesia may have both "in cash" and "in kind" components. The advantage of linking the level fees to paddy is particularly pronounced for a centralized agency which, because of its national visibility, may encounter political resistance to efforts to increase the nominal level of fees. If fees are set in cash, this makes it difficult to maintain their "real" level (in terms of purchasing power) in the face of inflation.

4-16 An analysis of prospects for increasing the level of funds collected from irrigation service fees needs to distinguish carefully between the amounts that are levied and the rates of collection of the amounts due. If fees are levied at a level which is satisfactory relative to costs, but collections are low, an irrigation agency's effort to increase its total revenues by raising the level of fees is likely to be seen by water users as unfair, and may lead to further deterioration in the rate of collection.

4-17 Rates of fee collection vary considerably among Korea (over 98 percent), Nepal (about 20 percent) and the Philippines (about 62 percent). While political and socio-cultural factors cannot be ignored in considering the reasons for these differences, the importance which irrigation agencies place on fee collection is a key determinant of collection rates. In Korea great emphasis is placed on achieving 100 percent rates of collection. This is reflected in the amount of staff effort that goes into the entire process of administering irrigation service fees, in the internal incentive structure which the FLIAs develop for their staff, and in incentives given to water users to pay their fees. In the Philippines, the increased importance which NIA now attaches to fee collection as compared with several years ago is apparent. By contrast, in Nepal there is little evidence that much importance is attached to the matter.

4-18 The importance which irrigation agencies in the study countries place on collection of irrigation service fees is related to the institutional context within which they operate. In Korea, the FLIAs have been financially autonomous agencies for a long period of time, and their internal incentives to emphasize high rates of fee collection are well established. Over time, rates of fee collection have risen from levels of 70 to 80 percent in the 1950s to the current rates of nearly 100 percent. In the Philippines, NIA has been placed in a position of true financial autonomy only in the last few years. While levels of fee collection are still not high, they have improved in recent years in response to NIA's increased efforts in this direction. In

Nepal, the DIHM operates in the context of financial dependence, which provides no internal incentives to increase fee collection.

4-19 Another factor affecting rates of collection of irrigation service fees is the sanctions that can be brought to bear on those who do not pay. In Korea, irrigation service fees are treated administratively as taxes, and the same enforcement mechanisms as apply to other taxes can be used if necessary. The Korean socio-cultural situation also supports strong social sanctions against those who do not pay. Both Nepal and the Philippines lack strong sanctions against those who do not pay their fees. In the case of the Philippines, NIA has attempted to counter the lack of sanctions by creating financial incentives to local water users' associations that would cause these organizations to mobilize social pressures on their members to pay.

4-20 Secondary income is a frequently overlooked but important source of financing. In Korea, secondary income accounts for approximately 25 percent of the total revenues of the FLIAs. Secondary income is also important to NIA in the Philippines, although its role in O&M is somewhat difficult to assess because much of it is derived from, and committed to new construction. But in 1984, approximately 25 percent of the total expenditures for O&M were financed through secondary income. Secondary income is also important in many local water users' organizations in Indonesia, and in many other places in the world, including Taiwan, China, southern India and the United States.

5. Recommendations

5-01 Wherever possible, government irrigation agencies should operate within an institutional context of (partial) financial autonomy whereby the agency's financial status depends in part on the revenues it is able to generate from water users through mechanisms such as irrigation service fees. Government subsidies to the irrigation agency for specified purposes are compatible with this financial autonomy, but need to be based on clearly defined criteria which make the amount of these funds largely independent of the amounts which the agency generates internally from water users and from secondary income.

5-02 Irrigation agencies operating within the context of financial autonomy should be responsible, through a combination of direct user charges and supplemental income, for the full cost of normal O&M plus a small but clearly identified portion of the capital cost. Responsibility for O&M costs is desirable because it is likely to enhance the performance of irrigation systems through more adequate funding and through better management associated with greater accountability to the water users. Responsibility for a small portion of the capital cost is desirable because it is likely to lead to better investment decisions. Furthermore, if there is provision for the involvement of the potential water users in the planning and decision-making process prior to the construction of the project, then responsibility for a portion of the capital costs may also lead to better irrigation performance due to the water users' perception that they, rather than a government agency, are the owners of the irrigation facilities.

5-03 If government irrigation agencies do not operate within the context of financial autonomy, the amount of funds collected from water users does not affect irrigation performance. In such a context, no general statement can be made about the optimal level of funds to be collected, which will depend on frequently conflicting considerations regarding the government's fiscal position and the distribution of income among groups in the nation.

5-04 To enhance irrigation investment decisions, ways should be sought, both at national and international levels, to create greater financial linkages between the investment decision process and the financial status of the agencies making these decisions. Giving a financially autonomous irrigation agency responsibility for repayment of a portion of the capital cost of irrigation is one step in this direction.

5-05 Within a context of financial autonomy, the mechanism of irrigation service fees levied on a per ha basis -- which is the principal direct financing mechanism currently in use in the study countries -- is a reasonably satisfactory approach for obtaining resources from water users. Efforts to make water pricing to individual farmers the primary financing mechanism would be inappropriate, due both to the widespread absence of the pre-conditions necessary for its implementation, and to the liklihood that the additional costs necessary for implementation would exceed the incremental benefits.

5-06 Although true water pricing is generally not feasible in gravity systems serving large numbers of small farmers whose principal crop is rice, it may be possible in some countries to experiment with water pricing in a few selected small pump projects. A combination of a water price, reflecting the marginal cost of pumping, and a per ha irrigation service fee reflecting other costs that vary less directly with water use might be considered.

5-07 Experimentation with financing irrigation services through water wholesaling, possibly also in combination with irrigation service fees, may be feasible in a few selected gravity irrigation projects in some countries. This would require delivery of water by an irrigation agency to the head of a lateral or tertiary canal at the request of a water users' organization. Such an approach would obtain some of the benefits of water pricing without incurring unreasonable physical, administrative and financial burdens. It would also likely encourage more efficient operation of the irrigation facilities, as it would place more pressure on the irrigation agency to make deliveries at the specified points in accordance with agreements made with the water users' organizations. The existence of water users' organizations with O&M responsibilities at the lateral or tertiary level in some Philippine and Indonesian systems (and perhaps also in some land consolidation areas in Thai systems) is an encouraging prospect for such an approach; however, in any given situation, careful consideration of social and institutional factors must be given in developing experimental approaches.

MAIN REPORT

Regional Study on Irrigation Service Fees:

Final Report

by

Leslie E. Small, Marietta S. Adriano and Edward D. Martin

A Report Submitted to the Asian Development Bank by the International Irrigation Management Institute under the ADB Technical Assistance for a Regional Study on Irrigation Service Fees

January 1986

Acknowledgements

The authors are indebted to many people and institutions for the assistance provided during the study which led to the preparation of this report. We particularly wish to acknowledge with thanks the assistance of the staff of both the Asian Development Bank and the World Bank in making suggestions and in providing relevant documents; the assistance of the governments of Indonesia, Korea, Nepal, Philippines and Thailand during the field visits; the assistance of Drs. Effendi Pasandaran, Young Kun Shim, Prachanda Pradhan, and Sopin Tongpan during and subsequent to the field visits to Indonesia, Korea, Nepal and Thailand, respectively; and the assistance of Dr. Poh Kok Ng of IIMI in data analysis and in compiling the list of references. We are grateful to Ms. Susan Thompson of Cornell University for the preparation of a paper on the history of irrigation financing experience in the United States, which is included in Annex 8 of this report. Finally, a special word of thanks to Mrs. Shanthi Weerasekera of IIMI who has spent many long and often late hours in a dedicated commitment to meet the demands and deadlines of typing and producing the finished report.

Table of Contents

	Page No.
1. Introduction	1
2. Conceptual Framework	2
2.1 Irrigation Financing: Fundamental Policy Alternatives	2
2.2 Irrigation Financing Policies: Methods and Principles	5
2.2.1 Obtaining Resources from Beneficiaries	5
2.2.2 Implementing Irrigation Services: Expenditure Control	6
2.3 Objectives of Irrigation Financing	7
2.3.1 Irrigation System Performance	7
2.3.1.1 Efficiency of Operation of Irrigation Facilities	7
2.3.1.2 Efficiency in the Utilization of Water	8
2.3.2 Investment Decisions	11
2.3.3 Fiscal Position of the Government	12
2.3.4 Income Distribution within the Private Sector	13
2.4 Cost Recovery and Methods of Financing Irrigation Services	14
3. Comparative Analysis of Irrigation Financing in Five Asian Countries	15
3.1 General Policies Regarding Irrigation Financing	15
3.2 Capital Cost of Irrigation	19
3.3 Operation and Maintenance Costs	19
3.4 Obtaining Resources from Irrigation Beneficiaries	21
3.4.1 Financing Mechanisms	21
3.4.2 Implementing Irrigation Service Fees: Two Policy Issues	24
3.4.3 Administrative Considerations	25
3.4.3.1 Direct Financing Mechanisms	25
3.4.3.2 Indirect Financing Mechanisms	28
3.4.4 Amounts of Resources Obtained	29
3.5 Controlling Expenditures	32
3.5.1 Budgeting for O&M	32
3.5.2 Role of Farmers in O&M	32
3.5.3 Accountability for O&M Expenditures	33
3.6 Ability of Water Users to Pay for the Cost of Irrigation Services	34

Page No.

3.7 Evaluation of Irrigation Financing Methods in the Five Countries 42

3.7.1 Irrigation System Performance 42
3.7.2 Improved Investment Decisions 44
3.7.3 Improved Fiscal Position of the Government 44
3.7.4 More Equitable Income Distribution 45

4. Conclusions 46
5. Recommendations 50
6. References 52

LIST OF TABLES

1 Typical Ranges for Capital Costs of New Irrigation Projects in the Five Study Countries ($/ha) 20

2 Typical Ranges for Irrigation O&M Costs in the Five Study Countries 22

3 Sources and Amounts of Revenues Earned or Collected by Irrigation Organizations, Compared to O&M Costs 31

4 Total Direct and Indirect Irrigation-Related Payments by Water Users under Alternative Policy Assumptions, Five Study Countries (kg paddy/ha/year) 35

5 Estimated Benefit Recovery Ratios under Alternative Financing Policies in the Five Study Countries (percent) 37

6 Total Direct and Indirect Irrigation-Related Payments by Water Users as a Percent of the Net Returns to the Farm Family Resources, under Alternative Policy Assumptions, Five Study Countries 39

7 Total Direct and Indirect Irrigation-Related Payments by Water Users as a Percent of Gross Production under Alternative Policy Assumptions, Five Study Countries 41

LIST OF FIGURES

1 Schematic Representation of Four Key Processes of Irrigation Financing 3

2 Alternative Models of Organizational Responsibility for Key Processes of Irrigation Financing 4

3 Models of Organizational Responsibility for Irrigation Financing in the Five Study Countries 16

Regional Study on Irrigation Service Fees:

Financial Aspects to Improve Irrigation Performance

1. Introduction

1-01 This report presents the findings of a study undertaken in 1985 by the International Irrigation Management Institute (IIMI) in conjunction with the Asian Development Bank's Technical Assistance for a regional study on irrigation service fees.

1-02 The Technical Assistance document (ADB 1985b) anticipates a gradual decline in the rate of investment in new irrigation projects among countries in East and Southeast Asia. The consequent shift toward greater emphasis on better operation and maintenance (O&M) of completed projects implies a greater need for internally generated funds. "The raising of resources . . . through irrigation service fees, land taxes, or other cost recovery measures, therefore becomes a matter of urgent and critical importance" (p 1).

1-03 The Technical Assistance document recognizes that such cost recovery measures may involve conflicting objectives. "Thus, there is a need to deal with cost recovery in the broader context of efficiency and equity and to devise an operationally feasible and optimal level and pattern of charges in the context of the specific circumstances of different countries" (p 2).

1-04 At the Regional Seminar on Irrigation Management sponsored by the Bank in 1979, it was concluded that appropriate cost recovery mechanisms should be established at levels which permit recovery of at least the entire costs of O&M. While there is general acceptance of this principle, social, political, cultural and administrative considerations often limit its implementation. "The result has been one of inadequate financial resources available for O&M . . . causing less than optimal maintenance of the systems and poor performance of irrigation projects" (p 4).

1-05 The technical assistance study was thus undertaken by IIMI "to review the rationale and procedures of cost recovery in irrigation projects in selected DMCs" (p 4). The study was undertaken from June through December 1985. It involved brief field visits to review cost recovery polices and experiences in Indonesia, Korea, Nepal, Philippines and Thailand, and a review of the literature dealing with conceptual issues, empirical studies and experiences in other nations with irrigation cost recovery. The objective of this study report is to provide information which can assist the Bank and its member countries in developing appropriate guidelines and policies relating to cost recovery mechanisms such as irrigation service fees, with emphasis on how such mechanisms can improve the performance of irrigation systems. The terms of reference for the study are given in Annex 2.

1-06 As indicated in the Technical Assistance document, a narrow focus on cost recovery is an inadequate framework from which to undertake an analysis leading to policy prescriptions for optimal levels and patterns of water charges. A broader and more suitable framework incorporating both efficiency

and equity considerations is developed in Section 2. The term "irrigation financing" is used to indicate this broader perspective. Emphasis is placed on how irrigation financing can improve irrigation performance. In Section 3, the irrigation financing experiences and policies of the five countries are discussed and evaluated. Supporting tables with data from each of the five countries studied are presented in Annex 1, and the terms of reference are given in Annex 2. Six additional annexes are bound in a separate volume. Annexes 3 - 7 are individual country reports for Indonesia, Korea, Nepal, Philippines and Thailand, respectively. Annex 8 is a literature review of irrigation financing issues and experiences in other countries.

2. Conceptual Framework

2.1 Irrigation Financing: Fundamental Policy Alternatives

2-01 Irrigation financing policy is closely linked to four key processes: allocating resources to irrigation; utilizing these resources to implement irrigation services; obtaining resources from irrigation beneficiaries; and controlling the resources obtained from irrigation beneficiaries. A narrow focus on cost recovery ignores all but the third of these processes.

2-02 The relationships among these four processes are indicated schematically in Figure 1. Resources allocated to irrigation (process 1) are utilized to provide irrigation services (process 2). These services generate income among beneficiaries, from whom resources may be obtained either directly (process 3a) or indirectly (process 3b). In either case, some agency will have control over these resources (process 4a or 4b). The distinction between direct and indirect acquisition of resources from beneficiaries lies in whether the basis for collection is specific to irrigation (such as a charge per ha of irrigated land), or only indirectly linked to irrigation (such as a general land tax based on land value or productivity).

2-03 Institutional arrangements for the allocation of responsibilities for these four processes are of critical importance to the effectiveness of financing policies. The principal alternatives are described by four general models (Figure 2).

2-04 In the first model, responsibility for all four processes resides in a single institution. This model is applicable to traditional communal irrigation systems, where the institution incorporating these processes is some type of water users' organization. In the second model, responsibilities for implementing irrigation services and obtaining resources from irrigation beneficiaries are combined in one agency, but separate agencies allocate resources to irrigation and control funds collected from water users. The irrigation implementing agency thus collects charges from water users only on behalf of some other agency which controls the use to which these funds are put. The third model involves separate institutional responsibility for each of the four processes. The fourth model is similar to the third, except that the process for directly obtaining resources from

Figure 1. Schematic Representation of Four Key Processes of Irrigation Financing

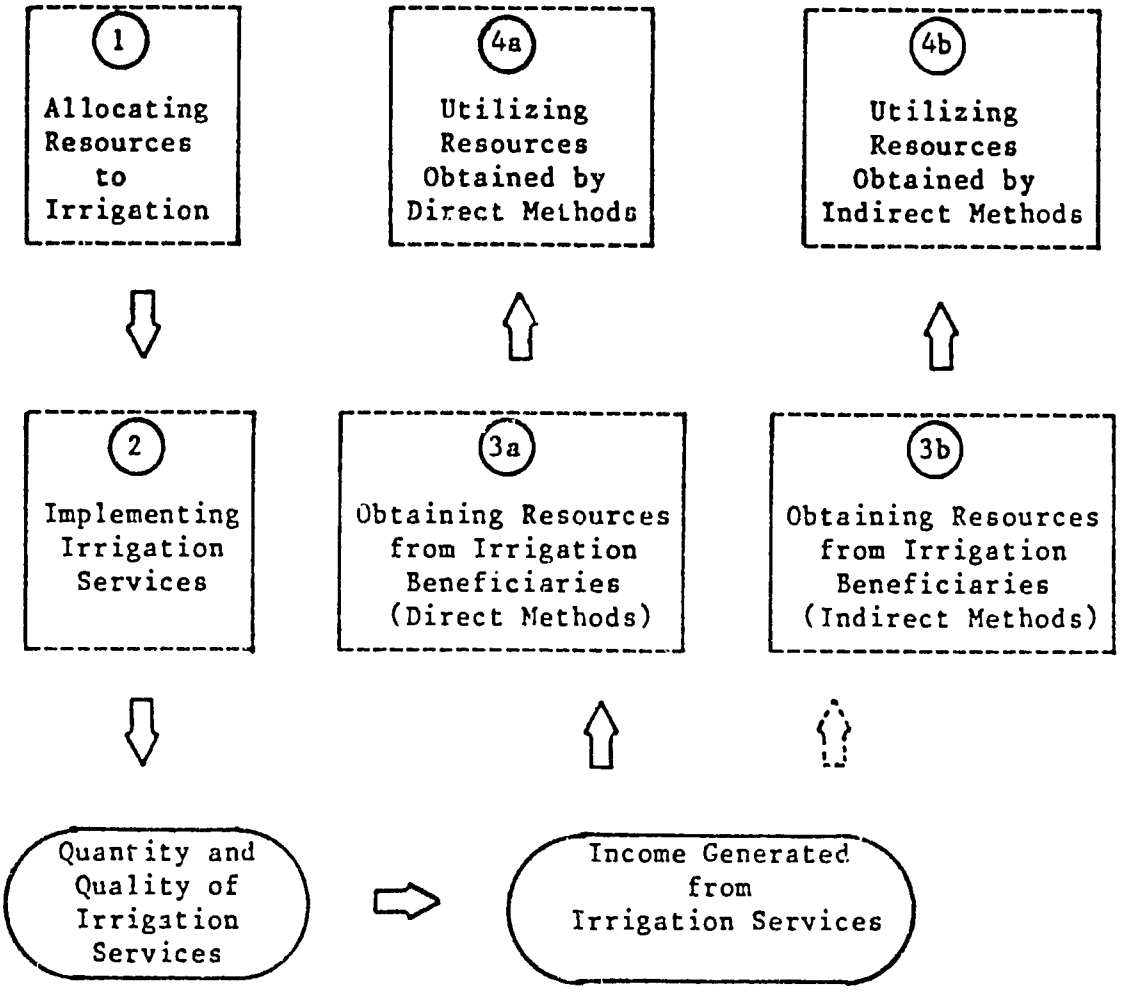

Figure 2. Alternative Models of Organizational Responsibility for Key Processes of Irrigation Financing

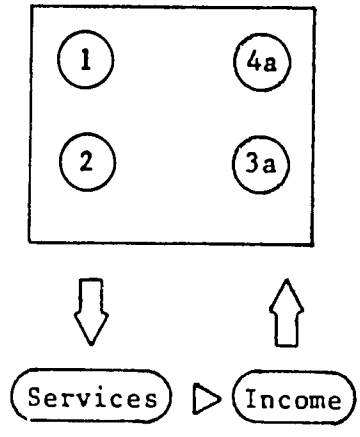

(a) Model 1.

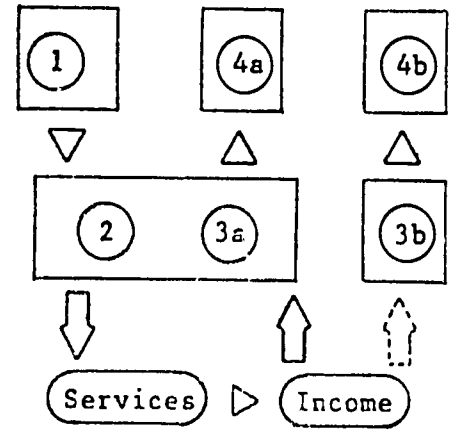

(b) Model 2.

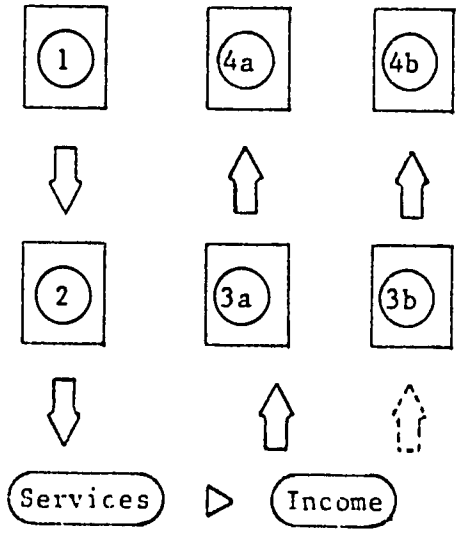

(c) Model 3.

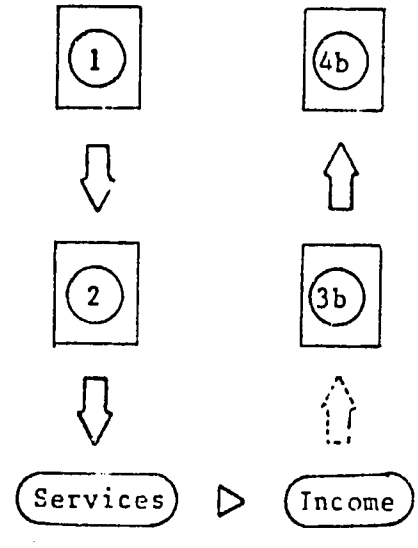

(d) Model 4.

the irrigation beneficiaries is absent, meaning that no water charges are imposed on the users of irrigation services.

2-05 A satisfactory evaluation of policies for establishing water charges cannot be limited to consideration of the process of obtaining resources from the water users (process 3). The effects of any specific financial policy on irrigation performance depend on the inter-relationships among all four processes. The key distinction is between situations of (full or partial) financial autonomy and those of financial dependence. With financial autonomy, an irrigation agency has at least partial responsibility for all four processes. In particular, it has control over resources which it obtains from water users, and thereby over the allocation of all or a major portion of the resources devoted to irrigation O&M. With financial dependence, an irrigation agency has no control over funds collected from the water users, and is thus dependent on resources allocated to it through the general government budgetary process.

2.2 Irrigation Financing Policies: Methods and Principles

2-06 The previous section identified broad policy options with respect to the ways in which responsibility for the four processes associated with irrigation financing are institutionally allocated. Regardless of how these responsibilities are allocated, specific mechanisms must be established to collect resources from beneficiaries and to control expenditures undertaken to implement irrigation services.

2.2.1 Obtaining Resources from Beneficiaries

2-07 Methods. The most important categories of methods for obtaining resources from irrigation beneficiaries are water prices, irrigation service fees, taxes, implicit taxation and secondary income.[1]

2-08 Under a system of water prices, payments depend on voluntary purchase decisions by water users. Examples include charges based on users' requests regarding either the volume of water to be delivered, the length of time of delivery or the number of irrigations. Irrigation service fees are compulsory charges imposed upon users of irrigation on some basis fairly closely related to the amount of the services provided. A common example is a flat charge per ha of land irrigated. Because both water prices and irrigation service fees charge for water on a basis directly linked to irrigation, they are direct financing mechanisms. Taxes are compulsory charges levied on individuals with no direct reference to any services provided. An example is a general tax on land. Implicit taxation occurs

---

[1] In this report, the terms "water prices", "irrigation service fees", "taxes", "implicit taxation" and "secondary income" thus have the specific meanings identified in paragraph 2-08. The term "water charge" or simply "charge" is used to refer to either water prices or irrigation service fees, while the term "financing mechanism" or "financing method" refers to any of the above concepts.

when government policies cause domestic prices for agricultural products to be below world market levels, or the prices of agricultural inputs such as fertilizer to be above world levels. Secondary income results from institutional arrangements which permit an irrigation agency to obtain revenues from sources other than charges levied on water users. Taxes, implicit taxation and secondary income are indirect financing mechanisms.

2-09 Principles. Direct methods of charging for irrigation services (water prices and irrigation service fees) may be based on either the cost principle or the benefit principle. The cost principle relates financial obligations to the cost of providing irrigation services, while the benefit principle relates these obligations to the benefits received from irrigation.

2-10 The cost principle has been attacked on various grounds (Ciriacy-Wantrup 1954; India. National Council of Applied Economic Research 1959). One problem is that in many institutional settings, it provides no incentives for judicious cost control. No matter how high the costs incurred, responsibility for repayment will be placed on the ultimate users. Another difficulty with the cost principle stems from the fact that for political or regional development reasons, uneconomic projects may be built. Expecting water users to pay for the costs of such projects is unrealistic. A third objection is that because the costs are usually based on historical, rather than on replacement or opportunity costs, there may be large differences between the amounts that users are asked to pay for similar irrigation services in geographically proximate areas.

2-11 Under the benefit principle, the costs of providing irrigation services are irrelevant in establishing water charges. Strict adherence to this principle would thus mean that for some projects, only a small portion of the cost would be repaid, while for others, payments might amount to more than the entire cost of the project (Ciriacy-Wantrup, 1954). The benefit principle also justifies imposing financial obligations on the indirect beneficiaries of irrigation.

2.2.2 Implementing Irrigation Services: Expenditure Control

2-12 The amount of resources that need to be obtained to provide irrigation services depends on expenditure decisions made by the irrigation implementing agency; therefore, questions of expenditure control must be addressed. Expenditure control involves both managerial accountability (insuring cost effectiveness in the types of expenditures that are authorized) and financial accountability (insuring the cost-effective use of funds for authorized expenditures). In both cases, the system of accountability may be either upward to higher levels of authority within government, or downward to the water users.

2-13 Organizationally, accountability in irrigation agencies may be achieved through either financial autonomy or financial dependence. In the case of financial autonomy, the agency or agencies operating irrigation projects are responsible for generating income to cover expenditures incurred in providing irrigation services. (To the extent that these agencies are only semi-autonomous, funds to cover specified portions or categories of

expenditures may be provided from external sources such as the general government budget.) An internal control on expenditures is thus created by the need to balance expenditures against income. To the extent that the ability to generate income depends on the satisfaction of water users, financial autonomy implies some downward accountability, with a degree of implicit control over expenditures by water users. Upward accountability may also exist through the supervisory powers of a government agency.

2-14 In the case of financial dependence, a line government agency is responsible for the operation of irrigation projects. The agency is dependent on the budgetary process of the central government for its financial support, which thus provides a generalized degree of expenditure control. Financial dependence invariably implies a system of upward accountability.

2.3 Objectives of Irrigation Financing

2-15 A nation's irrigation financing policies may have objectives related to irrigation system performance, irrigation investment decisions, the fiscal position of the government, and income distribution among classes of individuals. The first two of these objectives relate to economic efficiency, while the latter two relate to equity considerations.

2.3.1 Irrigation System Performance

2.3.1.1 Efficiency of Operation of Irrigation Facilities.

2-16 Irrigation financing mechanisms may affect the efficiency of system operation through their effect (1) on the availability of funds for O&M; (2) on the accountability of system managers; and (3) on the amount of cooperation and involvement of the water users in O&M.

2-17 Availability of Funds for O&M. Efficient operation of irrigation facilities is frequently hindered by low funding levels for normal operation and maintenance. If funds are provided through a government budgetary allocation process, it is likely that in periods of generally tight budgets the amounts provided for O&M will be severely inadequate. In this situation, if additional funds for O&M can be made available by collecting water charges, a significant improvement in the level of performance of the existing irrigation facilities may be possible. This requires that the agency responsible for irrigation O&M be given control over the funds collected.

2-18 Accountability of System Managers. Financing policies may enhance irrigation performance by increasing the degree of managerial and financial accountability to water users. One approach is to give irrigation agencies a significant degree of financial autonomy. Project managers may then be more concerned about the quality of irrigation services provided in order to enhance their ability to collect charges from the water users. Water users may also realize that the quality of services depends on payment of the water charges. Another approach to managerial accountability is to give managers a direct stake in the quality of the irrigation services. This is done in some

private irrigation systems by basing the charge for water on the size of the crop. Because payments are directly tied to yields, the manager has an incentive to provide a high quality of irrigation services.

2-19 Cooperation and Involvement of Water Users in O&M. Water users may cooperate more actively in O&M if financial policies encourage them to feel that they, rather than some remote government agency, own the irrigation facilities. This is most likely to occur if the water users bear a clearly defined and accepted financial responsibility for a portion of the capital costs. Such a financial arrangement implies that the institutional context be one of financial autonomy. It also implies involvement of the potential water users in the planning and decision-making process for a project prior to its construction.

2.3.1.2 Efficiency in the Utilization of Water.

2-20 Financing mechanisms can increase the efficiency of water utilization only to the extent that they influence farmer decisions affecting water use. Such decisions are of three types: cropping decisions; decisions on the conservation of water on the farm; and decisions on the acquisition of water for the farm.

2-21 Both water prices and irrigation service charges may affect cropping decisions and thus the total water use, through their effect on the expected profitability of alternative crops. But other factors affecting profitability may be considerably more important determinants of cropping decisions than the cost of water. Furthermore, other socioeconomic factors, such as off-farm employment opportunities, also affect cropping decisions. Water conservation decisions are largely related to land preparation, the maintenance of field channels for water distribution on the farm, and, in the case of irrigated rice, the maintenance of bunds surrounding the field. These decisions will be affected by both the expected availability of water, and the cost which the farmer must pay to obtain additional water. A farmer's water acquisition decisions depend on the type of crop grown, the degree of uncertainty regarding future availability of water, and the effect of his decisions on his total cost of water. Of the five types of financing mechanisms, only water prices can affect decisions regarding water conservation and water acquisition.

2-22 Although water pricing or, in the case of cropping decisions, irrigation service fees, can theoretically enhance the efficiency of farmers' water use, overall economic efficiency of irrigation will not necessarily be improved by establishing such financing mechanisms. Requirements and costs of implementation need to be considered, along with the magnitude of the expected gains in water use efficiency.

2-23 Requirements for Implementation. If a financing mechanism is to enhance efficiency of water use, the water user must have control over the cost he pays for water. In the case of cropping decisions, all that is necessary is for a per ha irrigation service fee to vary according to the type of crop planted. But for water prices to influence water conservation and water acquisition decisions, users must have some control over the amount

and/or timing of water deliveries, and these deliveries must be measured either in terms of volume of water delivered or length of time that water is delivered.

2-24 Contrary to what is commonly assumed, volumetric measurement of water is not necessarily required for an effective water pricing system. The amount of water received by a water user and his cost for water must vary in a reasonably predictable fashion with his water utilization decisions, but it is not necessary that water payments be strictly proportional to water deliveries. For example, in some pump irrigation projects, a water user is charged according to the length of time which he receives water. If the price per hour is constant throughout the cropping season, and if the volume of water delivered per hour decreases over the season (due to a declining water table), then the effective price per unit of water rises over the season. It is unnecessary to measure the actual volume of water for this pricing system to encourage the water user to be efficient in his use of water.[2]

2-25 Implementation of a volumetric charge for water does not guarantee that the requirements of water pricing have been met. If the water user has no control over the volume of water received, or its timing, then charging for water volumetrically would have no influence on his water use decisions. For example, the Warabandi system of water distribution used in northwestern India and Pakistan has a rigid pattern of timed turns for water delivery to individual farmers. Under such a system, charging volumetrically for the water would represent an irrigation service fee, rather than a water price, and would not enhance the efficiency of water use.

2-26 Another requirement for implementation is the ability to deliver water on a timely basis in amounts for which the water users agree to pay. This implies that the managers of the irrigation system have a high degree of control over the distribution of the supply of water. The ability to distribute water on the basis of supply control is thus a pre-requisite to implementation of a demand-based system of water distribution using water prices.

2-27 A third requirement for implementation is the ability to enforce payment of water charges. One approach to enforcement is to stop water deliveries for non-payment of water charges. This method is sometimes used in small private irrigation projects, but becomes difficult to implement in large public systems. In the case of pump projects, it may be possible to enforce water charges to a group of water users by refusing to operate the pump unless the collection of water charges from the entire group of farmers served by the pump reaches some specified minimum level; however, political pressures make effective implementation of such a policy problematic.

---

[2] For a system of time-based pricing to work well, it is probably necessary that there be some reasonable day to day consistency in the volume of flow delivered per unit of time. Otherwise, a system of pricing by time would probably be viewed as unfair and would therefore become unworkable.

2-28 Although the ability to enforce payment by terminating irrigation services to individuals who do not pay is very limited in most Asian irrigation systems, other means of enforcement exist. In some countries, the primary enforcement mechanism involves legal action through a system of courts. This method, however, is generally too time-consuming and expensive to be effective when the irrigation system involves large numbers of small farmers. Another enforcement mechanism which may be very effective in some societies is social pressure by local farmers against those who have not paid their water charges. Such pressures may be reinforced by a system of locally administered and collected fines or penalties for nonpayment. A third alternative which may be important in some countries is police action. For example, it has been reported that in Korea the police may confiscate some of the property of a farmer who has not paid his water charges and has resisted efforts to make him pay (Wade 1982, p 37).

2-29 Efficiency Gains from Implementation of Water Pricing. The gain in efficiency of water use resulting from a system of water prices depends on the degree of responsiveness of water users to the prices charged. If the response is low (inelastic), the gain in efficiency will also be low. Very little information is available on responsiveness to water prices in Asian gravity systems. In part this is because very few such systems have a system of water pricing. Some insight might be gained from studying private systems (generally based on pumping) and some public pump projects where water prices have been imposed. In such systems, however, water supply is generally more reliable than in large publicly operated gravity irrigation systems, resulting in a different response to price.

2-30 Much of the apparent "waste" of water by farmers, particularly in rice-based irrigation systems, reflects inadequate supply control more than it reflects excess demand due to the absence of water prices. Supply control can reduce wastage of water that occurs not because farmers are excessive in their demands, but because water flows through uncontrolled channels and irrigated turnouts onto fields and into drainage channels. Supply control can also be used to impose an appropriate degree of water scarcity on farmers throughout the irrigation system, giving water a high opportunity cost, which encourages farmers to make many of the same adjustments they would make under a system of water prices. Because the ability to implement supply control is a pre-requisite to implementation of a pricing system, many of the apparent gains from water pricing could be realized without actually establishing a system of water prices. The true efficiency gains from the pricing system itself are thus less than frequently assumed.

2-31 Costs of Implementation. Even if a system of water prices increases the efficiency of water use, overall economic efficiency will not be enhanced unless the cost of administering the price system is less than the gain in efficiency of water use. In most gravity irrigation systems in south and southeast Asia these costs are likely to be very large. These costs include the cost of billing, collecting and enforcing the system of water charges. Most importantly, they include the cost of measurement of water. In the case of volumetric measurements, both technical and cost problems will be encountered in the measurement of flows to the individual small farmers. Unless such a system of measurement can be limited to the measurement of

flows of water being delivered to an entire group of farmers (for example, all farmers served by a single tertiary canal), the costs very well may outweigh the efficiency gains from the price system. Measurement by time presents fewer problems, and as noted above, is more likely to be feasible for pump projects.

2.3.2 Investment Decisions

2-32 Financing policies may affect decisions involving investments in new irrigation projects, in the improvement of the infrastructure of existing projects, and in new sources of water for existing irrigation projects.

2-33 Investments in new irrigation projects. The extent to which the investment decision process is influenced by information about the amounts which farmers are willing to pay for water depends on institutional arrangements. If the key national and international agencies involved in these decisions have no financial stake in the extent to which costs are recovered from users, then it is unlikely that their decisions will be influenced by such considerations. But if the decisions are made by agencies whose financial viability is dependent in part on the ability to recover a portion of the investment costs from water users, then information on farmers' ability and willingness to pay for irrigation services (either via water prices or irrigation service fees) is much more likely to play a role.

2-34 Infrastructure improvements for existing projects. A distinction is needed between decisions made by government agencies (eg., decisions regarding rehabilitation) and those made by individual water users. For government agencies, the situation is similar to the case of investment in new projects. In the case of an individual farmer, investment decisions should be influenced by the expected savings in payments for water. A system of water pricing may thus enhance the economic efficiency of these decisions.

2-35 Investments in new sources of water for existing projects. Water shortage in an irrigation project may result in pressures to develop new sources of water (such as tubewells or upstream storage capacity). These pressures are likely to be greater if the water users do not expect to pay for the cost of the investment, and could lead government agencies to make uneconomic decisions. For investment decisions made by farmers, the opportunity cost of water, rather than its price, is likely to be the critical determinant. The high opportunity cost of water resulting from water shortage may encourage a farmer to invest in a new source of water (such as groundwater). Whether such a decision is efficient from a national economic perspective (in contrast to the farmer's financial perspective) depends on whether excess water elsewhere in the system could have been supplied to the farmer at a lower cost. If so, the immediate solution to the inefficiency is a better distribution of the existing supply.[3]

---

[3]To the extent that financing policies can assist in the improvement of the distribution of supply, the argument returns to the issues discussed in section 2.3.1.1.

2-36 Investment decisions may thus be enhanced by irrigation service fees or water prices where an institutional linkage exists between the investment decision process and the financial viability of the agencies making the decisions. For this to occur at the national level, a financially autonomous irrigation agency would need to have responsibility for repayment of at least a portion of the capital costs of irrigation. In countries where investment decisions are made by irrigation agencies which are financially dependent on the central government, it is unlikely that water charges will have much effect on the decisions made. International lending agencies also play key roles in the investment decision process. A financial linkage making the repayment of a portion of the loans of these agencies dependent on the amounts of funds collected from irrigation service fees or water prices could be expected to enhance the quality of their investment decisions.

2.3.3 Fiscal Position of the Government

2-37 The expenditure of public funds for irrigation is a drain on government finances which limits the availability of funds for other public expenditures. The benefits generated by irrigation represent a potential source of revenues which the government might utilize either to build additional irrigation projects or to undertake other types of activities. This leads to the question of the optimal level of funds to be recovered from a fiscal perspective.

2-38 To address this question requires consideration of general economic policies on prices, taxes and foreign exchange which affect the distribution of income between the public and private sectors. A useful conceptual starting point is that of the net fiscal impact of irrigation. The outflow of government funds for irrigation is reasonably easy to identify and to quantify. But the inflow of funds to the government resulting from irrigation is more difficult to measure. Even in the absence of water charges, irrigation may increase government revenues by fostering increased levels of economic activity which are in turn subject to various forms of taxation. These inflows, as well as any inflows from direct water charges, need to be considered in estimating the overall fiscal impact of irrigation.

2-39 From a fiscal perspective, the optimal level of funds to be collected by the public sector from the beneficiaries of irrigation depends on two factors. The first is the value to society of additional funds obtained by the public sector. This in turn depends on the productivity with which these additional funds are used. The second factor is the value to society of additional income in the hands of the users of irrigation water. This value would be greater in cases where the income level of the water users is low. At some low level of income, there would be greater social benefit from allowing the additional income to remain with the water users than to extract it from them for use by the public sector.

2-40 The determination of the value of additional income to the public sector and the value to society of additional income retained in the private sector involves subjective value judgments, and is therefore inherently political in nature. The resulting politically determined optimal flow of funds from the water users to the public sector could be anywhere from zero

to an amount exceeding the full cost of irrigation. There is no inherent logic in necessarily limiting inflows to the amounts which the government has spent on irrigation.

2.3.4 Income Distribution within the Private Sector

2-41 Situations with No Income Redistribution Objectives Associated with Irrigation. In the absence of any income redistribution objective associated with irrigation, equity considerations imply that those who benefit from irrigation, either directly or indirectly, should bear its cost. This allows the government to recover its expenditures on irrigation, thereby enhancing its ability to undertake investments for the benefit of other economic groups (such as rainfed farmers). Otherwise, investments in irrigation will bias the distribution of income towards the beneficiaries of irrigation, and away from those who are unable (due to geographic location, etc.) to receive irrigation benefits.

2-42 This equity principle implies that payment for the cost of irrigation should not be limited to water users, but should also include those who indirectly benefit from irrigation through increased levels of economic activity, new employment opportunities or increased values for assets such as nonagricultural land.[4]

2-43 The question of the importance of indirect benefits of irrigation projects has seldom been examined carefully. The few empirical studies undertaken have found substantial indirect benefits. In a series of studies examining the magnitude of direct and indirect benefits of irrigation in the Western United States, it was found that indirect benefits exceeded direct benefits by 30 to 40 percent (Marts 1956). A study using an input-output model estimated the indirect effects of the Muda Irrigation Project in Malaysia to be equivalent to approximately 75 percent of the direct effects (Bell and Hazell 1980). Another study in California USA noted that many of the indirect effects of irrigation are reflected in towns and cities which serve the farms. Because of these effects, California's irrigation districts have the right to tax lands in cities as well as farm lands to help finance irrigation (Gaffney 1969).

2-44 From an income distribution perspective, the existence of indirect benefits may justify complementing charges on water users with other means of financing. Difficulties with implementing a system of direct charges on

---

[4] The issue of indirect benefits in questions of responsibility for repayment of irrigation costs is separate from the issue of indirect benefits in the appraisal and justification of irrigation projects. In the latter case, it is generally not appropriate to consider indirect benefits because such benefits are seldom net additions to national income. Rather, they represent a redistribution of benefits from one sector or region of the national economy to another. But when responsibility for payment of irrigation costs is considered, it is appropriate that all those who benefit substantially from irrigation pay a portion of its cost.

indirect beneficiaries requires that other means of financing, such as taxes structured so that they would tend to be borne more by indirect beneficiaries, need to be considered.

2-45 Many of the benefits of irrigation, are likely to become capitalized in land values. This is true of direct benefits because of the limited and geographically fixed supply of land to which irrigation water can be provided. It tends also to be true for indirect benefits because of the tendency for such benefits to be concentrated geographically near the irrigation project. This builds a case for taxation based on land values, a possibility which has been noted by a number of writers (Milliman 1972; Gaffney 1969; Renshaw 1960).

2-46 Situations with Income Redistribution Objectives Associated with Irrigation. In some cases, irrigation development may be associated with an explicit policy to distribute income to a particular group of people. For example, irrigation projects may be built in a depressed region of a country in order to raise rural incomes in the region. Because of the income distribution objective, such projects may be built in spite of their failure to meet standard national economic efficiency criteria. Given such an income distribution objective, it would be inappropriate to charge the users of the irrigation water the full cost of irrigation. The success of the income distribution policy may in fact require that a very low charge or no charge at all be imposed on the direct beneficiaries.[5] In some cases, irrigation may be seen as one means of either promoting an income distribution policy favoring the entire rural sector of the economy, or offsetting negative income distribution consequences for the rural sector of other macroeconomic policies followed by the government.

2-47 It is also possible that an explicit redistribution policy will attempt to discriminate among classes of irrigated farmers. Such discrimination might be based on factors such as the size of farm or the degree of commercialization of the farm. Any system of water charges would require increased complexity to account for these distinctions, leading to greater costs and difficulties of administration. In such a situation, financing by means of taxes levied on a basis consistent with the income distribution objective might be preferable to water charges.

2.4 Cost Recovery and Methods of Financing Irrigation Services

2-48 The above discussion of the specific objectives of irrigation financing has called attention to the various factors that need to be considered in establishing the optimal level and type of water charges. Depending on these conditions, the resulting optimal level of cost recovery could range from zero to more than one hundred percent. It is not possible to specify directly an optimal level of cost recovery; rather, it is a

---

[5]But if a decision against implementation of water charges leads to a reduction in the quality of irrigation performance through the mechanisms discussed in Section 2.3.1, the income distribution objectives may also fail to be realized.

residual based on the specific objectives of financing related to efficiency and income distribution questions, and on the institutional context in which financing mechanisms operate. Cost recovery which does not promote any of these objectives, or which promotes one objective at the expense of a more important objective, is undesirable.

2-49 It thus seems that much of the attention which has traditionally been paid to cost recovery questions has been misplaced. The focus on cost recovery reflects a tendency to view public irrigation investments in the same financial terms as a private investment would be viewed. A private investment which is profitable to the investor must be capable of full cost recovery. Futhermore, these funds must be generated from direct beneficiaries, because a private investor would not be able to levy charges on indirect beneficiaries. But governments are not faced with these same constraints. And although cost recovery appears superficially to be a measurable and objective standard against which to judge financial performance, determination of the optimal level of cost recovery is just as difficult and as subjective as determination of the optimal financing arrangements relative to the underlying objectives. It is therefore inappropriate to place the primary focus of irrigation financing policy on cost recovery.

3. Comparative Analysis of Irrigation Financing in Five Asian Countries

3.1 General Policies Regarding Irrigation Financing

3-01 General models of the organizational responsibility for irrigation financing were presented in Section 2.1 (Figure 2). The models differed with respect to the relationships among the four processes of allocating resources to irrigation, utilizing these resources to implement irrigation services, obtaining resources from irrigation beneficiaries, and controlling the resources obtained from the irrigation beneficiaries. Based on these concepts and models, the general financing policies of the five countries studied are depicted schematically in Figure 3.

3-02 For comparative purposes, the financing arrangements associated with traditional communal irrigation systems are also shown (Figure 3a). These systems involve full financial autonomy, with decentralized water users' organizations which have responsibility for all four processes. This provides both for close financial linkages among resource allocation, utilization and acquisition decisions, and for close linkages between the implementors and users of irrigation services.

3-03 Financing policies in Korea bear certain similarities to the traditional communal model, while also exhibiting important differences (Figure 3b). For O&M and for some construction activities partial financial autonomy exists, with responsibility for all four financing processes combined within a single type of organization, the Farmland Improvement Association (FLIA). In addition the central and regional governments are involved in some resource allocation decisions (particularly with respect to new construction), and a central government semi-autonomous irrigation agency

Figure 3. Models of Organizational Responsibility for Irrigation Financing in the Five Study Countries.

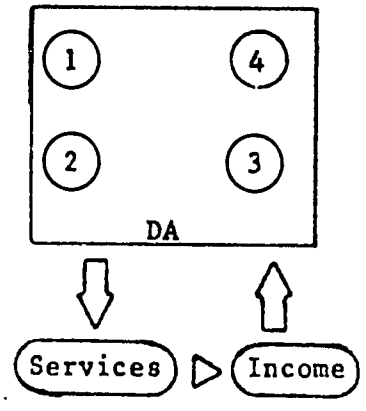

(a) Traditional communal irrigation, all five countries

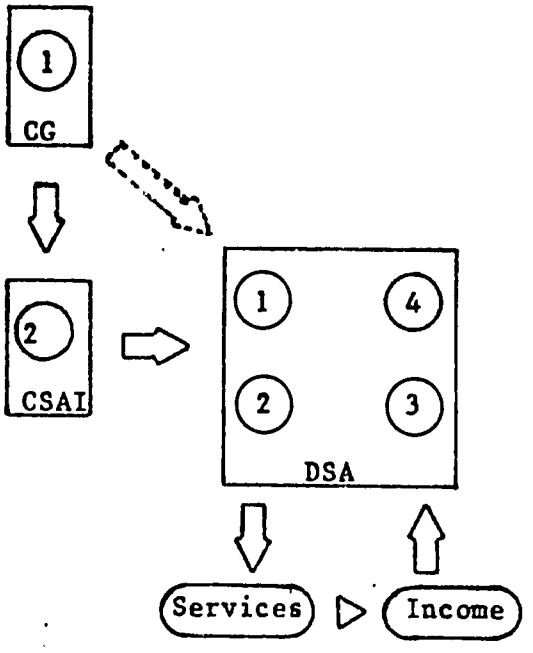

(b) Korea

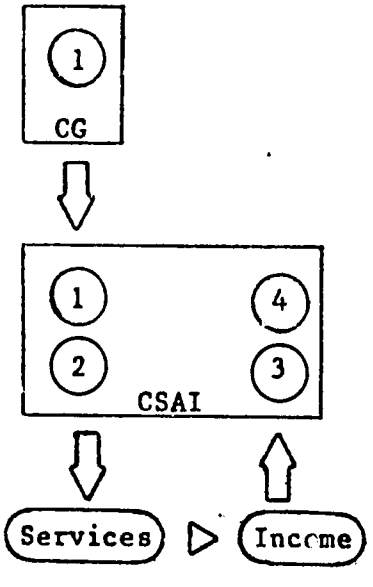

(c) Philippines

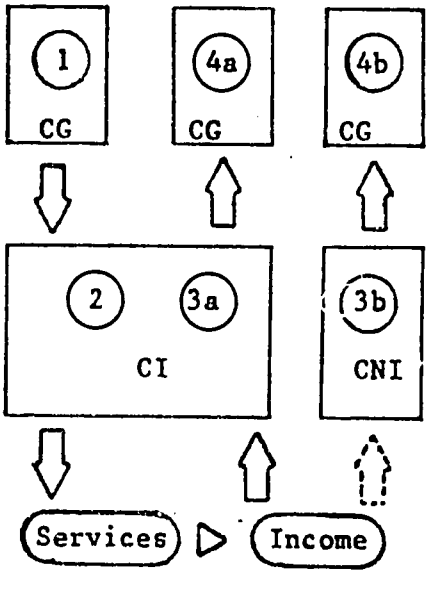

(d) Nepal

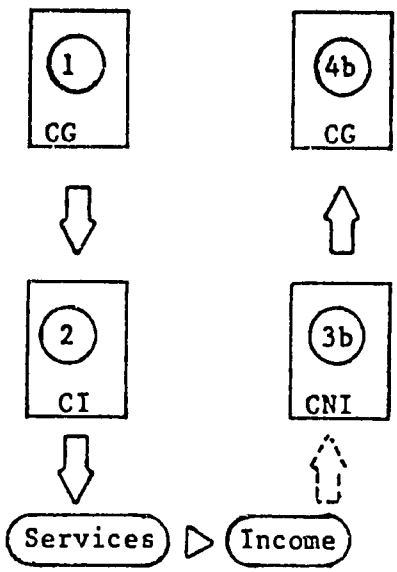

(e) Thailand

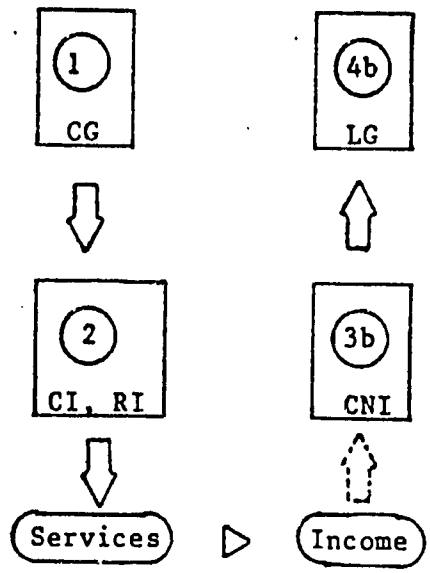

(f1) Indonesia (excluding tertiary system)

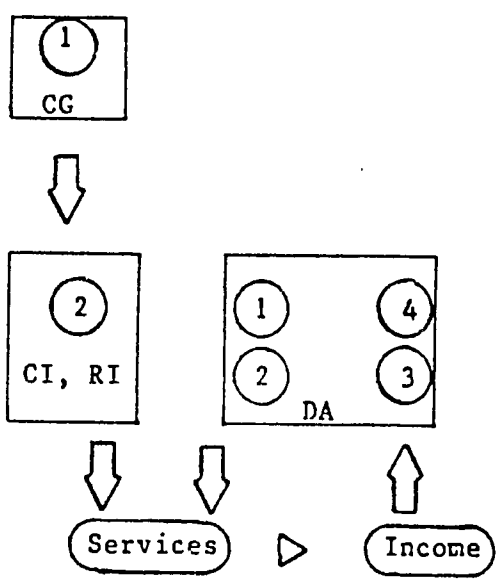

(f2) Indonesia (tertiary (system)

Key to Figure:

CG = Central Government (high level)

CI = Central Government Irrigation Agency

CNI = Central Government Agency, Non-irrigation

CSAI = Central Government Semi Autonomous Irrigation Agency

DA = Decentralized Autonomous Organization

DSA = Decentralized Semi-Autonomous Organization

LG = Local Government

RI = Regional Government Irrigation Agency

(the Agricultural Development Corporation) implements major construction activities. In contrast to the case of communal irrigation, the FLIAs are not controlled by irrigators. Rather, they are decentralized organizations which, while having significant elements of financial autonomy, are closely supervised by the central and provincial governments which establish the basic financial policies and regulations within which the FLIAs must operate. Although farmers are formally members of FLIAs, the ultimate control over their activities lies with the government, rather than with the farmers.

3-04 Financing policies in the Philippines also involve partial financial autonomy, with responsibilities for all four financing processes combined within a single agency, known as the National Irrigation Administration (NIA) (Figure 3c). But unlike the case with Korea and with communal irrigation systems, NIA is a centralized agency. As in Korea, responsibility for some of the resource allocation decisions associated with new construction resides with the central government.

3-05 Nepal generally follows the model of financial dependence. Responsibility for resource allocation decisions resides in the central government. For most government irrigation projects, implementation of irrigation services, and, since the early 1980s, collection of water charges are the responsibility of a centralized irrigation agency, the Department of Irrigation, Hydrology and Meteorology (DIHM). But control over the funds collected from the water users lies with the central government, as these funds become a part of the general government revenues (Figure 3d). This separation of responsibility for resource allocation decisions for O&M from control over the funds derived from the irrigators is an important difference from the policies in Korea and the Philippines. Nepal also has a mechanism for indirect acquisition of resources (a land tax) which involves separate government agencies.

3-06 Policies in Thailand are similar to those of Nepal, except that there is no element for direct acquisition of resources from the beneficiaries of irrigation (Figure 3e). As in Nepal, a central government irrigation agency, the Royal Irrigation Department (RID), has implementation responsibility for the utilization of resources allocated to it from the central government. Thailand also has other central government institutions involved in the administration and collection of taxes and levies on rice exports which, by lowering the domestic price of rice, is a method of implicit taxation of the irrigation beneficiaries.

3-07 In a general sense, Indonesia's financing policies are similar to those of Thailand, with implementation separated from resource allocation, and only indirect methods for acquisition of resources from the beneficiaries of irrigation (Figure 3f). In this case, however, implementation is undertaken not only by a central government irrigation agency, the Directorate General for Water Resources Development (DGWRD), but also by Provincial Departments of Public Works (which, because they are part of the Provincial Governments, are not simply administrative arms of DGWRD), and by certain specialized authorities established to operate specific projects. But at the tertiary level, partial financial autonomy exists, with responsibility for O&M and for direct acquisition from the water users of

resources for tertiary O&M activities residing with local village government or decentralized water users' organizations. The central government is also sometimes involved in tertiary rehabilitation and upgrading (Figure 3g). Indirect resource acquisition in Indonesia occurs via a land tax (IPEDA) which is administered by a central agency, but in practice is collected by the local village government. Control over the funds generated from this tax is by the local (mostly district) governments, rather than by the central government.

3.2 Capital Cost of Irrigation.

3-08 The capital costs of irrigation projects on a per ha basis vary widely within each of the five countries studied. Typical ranges found in the five countries are presented in Table 1. These figures should be considered as broadly indicative only. Details of the accounting methods used vary among the countries, so that some cost components (eg., some of the survey and design costs) may be included in the figures for some countries and not for others.

3-09 There is a general similarity of costs in Indonesia, Nepal, the Philippines and Thailand, with large projects typically costing between $1,500 and $3,000 per ha. Capital costs of irrigation in Korea are much higher than in the other countries, with a typical range for large projects being from $8,000 to $11,000 per ha. This is four to five times as costly as in the other countries. Smaller scale projects appear to cost about 10 times more per ha in Korea than in the other countries. Part of this difference is due to the much higher wage rates in Korea. But it also seems likely that Korea's emphasis on self-sufficiency in rice, coupled with its high domestic rice price -- which is approximately five times as high as the price in Thailand -- has led to development of irrigation in difficult areas where the real cost of irrigation is so high that the other nations would not consider irrigation to be feasible.

3-10 Table 1 shows that while capital costs per unit area commanded in Nepal are roughly comparable to those in Indonesia, Philippines and Thailand, failure to irrigate large portions of the commanded area in many Nepalese systems results in capital costs per ha actually irrigated that are considerably higher in Nepal than in these other countries. The extent to which additional portions of the command areas are eventually irrigated at little additional cost will be an important determinant of the actual capital cost of irrigated areas in Nepal.

3.3 Operation and Maintenance Costs

3-11 Comparisons of O&M costs among the five countries are even more problematic than comparisons of capital costs. Accounting differences and differences in the types of services that are included in the category of O&M costs make any precise comparison impossible. One particular accounting difficulty occurs in situations where a single agency is responsible both for major new construction and for the concurrent operation of previously constructed facilities. In such situations, efficient use of resources is likely to result in a blurring of distinctions at the field level between

Table 1. Typical Ranges for Capital Costs of New Irrigation Projects in the Five Study Countries ($/ha)

Country	Small Scale Communal Projects	Medium and Large Projects
Indonesia	800	1,500 - 3,000
Korea	4,000 - 7,500	8,000 - 11,000
Nepal		1,500 - 2,600[a] (2,000 - 6,600)[b]
Philippines	500	1,000 - 2,500
Thailand	50 - 500	1,500 - 3,000

[a] Based on figures for area commanded

[b] Based on figures for area actually irrigated

Source: Derived from various tables in Annexes 3-7.

construction and maintenance, so that accounting distinctions become arbitrary and fail to convey meaningful information.

3-12 Given these difficulties, the figures in Table 2 are presented only to indicate broad orders of magnitude with respect to O&M expenditures. Typical ranges of actual O&M costs per ha for the five countries are presented in the table, along with an indication of the expenditures which are considered by the irrigation sector to be needed to achieve desirable levels of O&M service. Excluding Korea, actual expenditures for O&M typically vary from about $10 to $35 per ha. Variability in these costs among projects within most of these countries is probably as great as the variability among the four countries in the average O&M expenditures. As in the case of capital costs, Korea has a totally different cost level for O&M, typically ranging from $145 to $230 per ha, with an average of $205 per ha. These amounts are roughly 7 to 10 times the level of costs in the other countries.

3-13 Comparisons among the five countries with respect to the categories of expenditures for O&M activities are so tenuous as to be unjustified. In several of the countries there is concern that the portion of O&M expenditures which is devoted to administrative expenses be kept at a reasonable level. But it is not always clear what is "reasonable". Operation of irrigation systems (in contrast to maintenance) is generally a labor-intensive activity. Much of the cost associated with operations should therefore be in the form of salaries for personnel -- both at the field level (gate keepers, pump operators, ditch tenders, etc.) and at higher supervisory levels (project engineers, etc.). To obtain useful data on operation costs and on maintenance costs separately, with each categorized by type of expenditure, would require a much more intensive investigation into the accounts of specific projects than was possible under this study.

3.4 Obtaining Resources from Irrigation Beneficiaries

3.4.1 Financing Mechanisms

3-14 The principal direct financing mechanism used in the countries studied is that of area-based irrigation service fees.[6] These apply in Korea, Nepal, the Philippines, and at the tertiary level of systems in Indonesia. The fees may be levied at a flat rate per year (Korea and some systems in Nepal), or may vary according to the number and type of crops grown. Water pricing is generally not used in government-supported irrigation projects, with the exception of a few small pump projects in Nepal operated by the Farm Irrigation and Water Utilization Division of the Department of Agriculture.

3-15 In general, Indonesia and Thailand have no direct financing mechanisms to cover any of the cost of irrigation services provided by the government. In Indonesia, however, tertiary O&M services are the responsibility of water users either through the village government structure or through water users' organizations. Thus from the point of view of the central government, these

---

[6] See Annex 8 for a discussion of financing mechanisms used in other countries.

Table 2. Typical Ranges for Irrigation O&M Costs in the Five Study Countries ($/ha)

	Actual Expenditures	Average Expenditures Desired for Adequate O&M
Indonesia	10 - 40	30
Korea [a]	211	211
Nepal	6 - 12	12 - 17
Philippines	17 - 35	24
Thailand	15 - 40	?

[a] Average O&M cost for 103 FLIAs.

Source: Derived from various tables in Annexes 3-7.

services are directly and completely financed by the water users. Fees charged by the local autonomous water-users' groups for tertiary O&M are generally established on the basis of the area irrigated, with separate rates per ha fixed for each season. In many cases, separate rates for cash payment, for payment in kind, and for labor contributions may exist. Thailand is also experimenting, in areas that have undergone land consolidation, with a similar arrangement of decentralized decisions regarding charges for the O&M of tertiary facilities constructed under the land consolidation program. Within certain limits established by guidelines from the central government, each local water-users' group is able to decide on the charge to be levied on its members. These charges are calculated on an annual basis according to the area irrigated, with no distinction between cropping seasons.

3-16 Indirect financing mechanisms are important in all five countries. Indonesia and Nepal both have a land tax, with per ha taxes dependent on assessments based on the productivity of the land. Considering that much of the net benefits of irrigation are likely to be capitalized into land values, such a tax has the potential to relate payments closely to the benefits received from irrigation; however, difficulties with keeping assessments updated to reflect changes in productivity brought about by irrigation weaken the link between tax payments and irrigation benefits in both countries. But when compared with many other indirect financing methods, the land tax has the advantage of creating less distortion in the economy, since it is a tax on a relatively fixed production input with few alternative uses.

3-17 For Thailand implicit taxation exists through an artificially low domestic price for rice resulting from a system of taxes and levies on rice exports. This creates a burden on rice farmers proportional to the amount of rice sold. To the extent that farmers with irrigation sell more rice than farmers without irrigation, this imposes a greater burden on the farmers benefiting from irrigation. As with the land taxes of Indonesia and Nepal, the link between irrigation benefits and the tax burden is weak. The amount of rice which a farmer sells depends not simply on irrigation, but also on factors such as farm size and cropping patterns. Another consideration is that since the tax directly affects the price of only one product, a variety of distortions in both production and consumption are created that may have undesirable efficiency consequences in the economy.

3-18 Secondary income is a frequently overlooked but important source of financing. In Korea, the FLIAs are able to generate revenues from a variety of sources such as interest on deposits, equipment rental, sale of fishing rights and sale of water for non-irrigation purposes. On the average, secondary income accounts for approximately 24 percent of the total revenues of the FLIAs (Annex 1, Table A1.9). In the Philippines, NIA earns secondary income from equipment rental, from interest on construction funds held on deposit, and from management fees which NIA charges to supervise construction of foreign-funded projects. The total amount of such income greatly exceeds revenues from irrigation service fees (Annex 1, Table A1.29); however, much of it is derived from, and spent on new construction, and is therefore not available to finance O&M expenditures. The approximate proportion of the total expenditures for O&M financed by secondary income was 47 percent in

1982, 28 percent in 1983 and 25 percent in 1984 (Annex 1, Table A1.25). Secondary income is important to some of the water users' organizations responsible for tertiary system O&M in Indonesia. In some cases it takes the form of rights to income from a specified parcel of land. Officials of the water users' organization are allowed to cultivate the parcel and retain the income from it as compensation for their services. This reduces the amount of funds which the association needs to collect directly from the water users.[7]

3.4.2 Implementing Irrigation Service Fees: Two Policy Issues

3-19 Uniformity of Fees. For the four countries having irrigation service fees, both institutional arrangements and perceptions of fairness affect the degree of uniformity of the level of fees charged. In the Philippines, the institutional arrangement of a centralized irrigation agency makes possible a system of fees for gravity projects that is largely uniform throughout the country. The one system (UPRIIS) with a higher charge than the others is subject to greater management inputs than other projects, which presumably lead to a higher quality of irrigation service. Higher fees are charged for pump projects, with more variability among projects in their amounts. This reflects the substantially higher operating cost of such projects, and the institutional arrangement that makes NIA financially autonomous and thus concerned about the high operating costs of such project. Within a given project, separate rates are charged for wet season and dry season irrigation. A lower rate is charged for upland crops than for rice (Annex 1, Table A1.22).

3-20 In Korea charges vary both among and within FLIAs. The variability among FLIAs reflects the fact that FLIAs are decentralized financially autonomous organizations. The average charge that is necessary to balance income and expenditures in one FLIA has no necessary relationship to the charge required in another FLIA (Annex 1, Table A1.8). Within FLIAs, the differentiation is based on a sense of fairness. Charges are differentiated both according to differences in benefits received (eg., land previously irrigated is typically charged less for capital cost repayment than land newly irrigated by the project) and according to the cost of providing services (eg., land irrigated with pumped water is generally charged more for O&M than other land in the same FLIA which is irrigated by surface water).

3-21 The situation in Nepal with a centralized irrigation agency lends itself to uniformity of irrigation service fees; however, some differences are made, apparently based on perceived differences in the quality of the irrigation services provided. Charges are sometimes, but not always, differentiated on the basis of the number of crops grown. Furthermore, although DIHM is the principal irrigation agency, other government agencies are involved in some irrigation activities, and differences among agencies exist in the level and types of charges levied on the farmers.

---

[7]The importance of secondary income as a source of financing irrigation is not limited to the five study countries. Examples from southern India, Taiwan, China and the United States are reported in Annex 8.

3-22 In Indonesia, the centralized irrigation agency has no system of irrigation service fees. Fees at the tertiary level, being determined by financially autonomous decentralized water users' association, vary substantially among projects.

3-23 Denominating Fees in Cash or in Kind. Irritation service fees are established in cash for Korea and Nepal, and in kind for the Philippines. Individual water users' associations in Indonesia sometimes have both "in cash" and "in kind" components. The advantage of establishing the level of fees in kind is particularly pronounced in the case of a centralized agency. Because of its national visibility, such an agency may encounter considerable political difficulty in raising rates, resulting in a decline in the "real" value of fees (i.e., their effective purchasing power) in the face of inflation. The experience of the Philippines with rates established in kind is that although they do not guarantee that the real value of the fees will remain constant, and although there may be short periods of particular difficulty when nominal commodity prices drop in spite of a general inflationary trend in the economy, they are a considerable improvement over a rate fixed in monetary terms (Annex Table A1.23).

3-24 In the Korean situation of decentralized financially autonomous FLIAs (with the resulting lowered political visibility of any single FLIA), it may be easier to change the rates modestly from year to year to meet the annual budgetary requirements. In spite of the fact that the FLIAs establish their annual rates in terms of cash, the maximum rates that may be charged are determined by the Ministry of Agriculture and Fisheries in terms of paddy.

3.4.3 Administrative Considerations

3.4.3.1 Direct Financing Mechanisms

3-25 Administrative considerations associated with the billing, collection and enforcement of direct financing mechanisms have a major bearing on their feasibility and cost of implementation. Sophisticated financing mechanisms tend to have greater administrative requirements and to be more costly to implement than simpler but cruder mechanisms. The possible efficiency and equity gains associated with the more sophisticated mechanisms must therefore be weighed against their increased administrative demands and costs.

3-26 Administrative Structure. Decentralization generally reduces the administrative burden associated with financing mechanisms. Costs of obtaining the necessary information (eg., on areas irrigated) are likely to be reduced because the responsibility for obtaining this information is placed in the hands of those who, being more intimately familiar with local conditions, can more easily obtain and verify it. Likewise, enforcement is also facilitated by the close contact between those enforcing the financing regulations and those on whom the obligations are levied.

3-27 Elements of decentralization can be observed in the implementation of financing mechanisms in Korea, Indonesia and the Philippines. In Korea, the implementation of water charges is largely in the hands of the decentralized

Farmland Improvement Associations (FLIAs). The information base and the mechanisms for billing of water charges available to the FLIAs are good, and present no serious obstacle to the effective implementation of a fairly complex system of charges which has been designed to be equitable.[8] Collection previously was also handled by the FLIAs, but recent changes make use of the existing procedures for the collection of local taxes. One probable consequence of this has been to reduce the total costs of collection, including the oversight and supervision of the collection process.

3-28 In Indonesia, the process of obtaining resources from farmers is decentralized to local water users' groups and the local village government. Although the quality of performance of such institutions varies, many of them are fairly effective in obtaining the resources needed to provide tertiary irrigation services. Enforcement of the obligations imposed does not appear to be a problem. As in the case with Korea, enforcement is probably enhanced by the direct link between the resources obtained from the farmers and the utilization of resources for O&M services provided to these same farmers.

3-29 The Philippines has a mixture of centralization and decentralization in the administration of financial obligations. On the one hand, administrative responsibility for irrigation service fees is in the hands of a semi-autonomous centralized agency, the National Irrigation Administration (NIA). But relatively low collection rates, coupled with pressures on NIA to become increasingly financially autonomous have led to experimentation with decentralization. In some cases, responsibility for managing and financing an entire lateral and its associated tertiary facilities has been transferred to water users' groups -- an approach very similar to that used in Indonesia to finance tertiary services. In other cases, much of the responsibility for collection of fees has been transferred to local water users' groups, with various financial incentives given to these groups to encourage more vigorous efforts to collect the fees. Although low collection rates remain a financial problem for NIA, the preliminary results of the decentralization efforts are promising.

3-30 As noted in the previous section, Thailand is experimenting with decentralized decision-making with respect to collection of fees for O&M services in areas having benefited from land consolidation. These efforts, which represent a new approach in Thailand to financing O&M services, are too recent to permit conclusions to be drawn regarding their effectiveness.

3-31 Nepal has a centralized approach to the administration of irrigation service fees in government projects. Responsibility for the assessment, billing and collection of fees lies with the Department of Irrigation, Hydrology and Meteorology (DIHM). At the project level, the DIHM project

---

[8]But one of the FLIAs visited during the field visit to Korea had recently modified its assessment system in a direction that reduced the emphasis on equity (fewer distinctions made on the basis of benefits received) but simplified considerably the administrative requirements for billing.

manager is responsible for these tasks. A special unit for administration of fees may exist at the project level.

3-32 Collection Costs. An important administrative consideration with any financing mechanism is the cost of implementation, including the cost of billing, collection and enforcement. The data available on such costs are quite limited.[9] In Korea, administrative and accounting procedures do not lend themselves to estimates of collection costs. Some data are available for the Philippines, where total collection costs in 1984 were reported to be about $0.84 per ha, which was equivalent to about 8 percent of actual collections, and about 5 percent of total assessments (Annex 1, Table A1.24). In one project in Nepal for which data were available, salaries of individuals directly associated with the administration and collection of irrigation service fees in 1984/85 amounted to 78 percent of the total funds collected. Data on other components of the cost of collection (transportation, allowances, supplies, etc.) were not available. Low collection rates are partially responsible for this high relative cost of collection; however, in the tubewell portion of the project, where collections were 76 percent of the amounts assessed, the cost of the salaries of the field collection staff alone amounted to 43 percent of the amounts collected, or 32 percent of the amounts assessed. These high collection costs suggest that irrigation service fees have a very small positive impact on the net fiscal position of the Nepalese government.

3-33 Rates of fee collection and enforcement. The rates of collection of irrigation service fees vary considerably among Korea (over 98 percent), Nepal (about 20 percent) and the Philippines (about 62 percent). While political and socio-cultural factors cannot be ignored in considering the reasons for these differences, the importance which an irrigation agency places on fee collection, and the enforcement mechanisms available are key determinants of the rates of collection.[10]

3-34 In Korea great emphasis is placed on achieving 100 percent rates of collection. This is reflected in the amount of staff effort that goes into the entire process of administering irrigation service fees, in the internal incentive structure which the FLIAs develop for their staff, and in incentives given to water users to pay their fees. Strong sanctions can also be imposed for non-payment. Irrigation service fees are treated administratively as taxes, and the same enforcement mechanisms as apply to other taxes can be used if necessary. The Korean socio-cultural situation also supports strong social sanctions against those who do not pay. Termination of irrigation services for non-payment, however, is apparently not considered politically acceptable.

---

[9]See Annex 8 for some information on collection costs in India and Pakistan.

[10]See Annex 8 for a discussion of experiences with rates of collection and enforcement of water charges in other countries.

3-35 The importance given in Korea to fee collection, and the high rates of collection achieved, reflect the long-standing institutional context of financial autonomy for irrigation. The FLIAs have been financially autonomous agencies for a long period of time, and their internal incentives to emphasize high rates of fee collection are well established. Over time, rates of fee collection have risen from levels of 70 to 80 percent in the 1950s (Shim 1985) to the current rates of nearly 100 percent.

3-36 In the Philippines, the importance which NIA attaches to rates of fee collection has increased considerably in the last few years, with NIA's increased financial autonomy. NIA has concentrated on placing more internal emphasis on fee collection, and on providing a variety of incentives for payment. One of NIA's approaches to improving fee collection has been to give responsibility for collection to local water users' associations, and to provide financial incentives to the groups that are great enough to encourage these groups to mobilize social pressures on their members to pay. In general, NIA has found it difficult to develop effective sanctions to enforce payment of irrigation service fees. Cutting off the supply of water is generally neither physically nor politically feasible. In the case of pump irrigation, a policy exists whereby the pump will not be operated by NIA unless the aggregate level of payment collected from the group of farmers served by the pump has reached 90 percent; however, implementation has proven difficult, due to the political pressures that the termination of irrigation services places on NIA.

3-37 In Nepal there is little evidence that much importance is attached to the collection of irrigation fees. This is consistent with the fact that the collection agency operates in the institutional context of financial dependency, giving it no vested interest in the rates of collection. A variety of administrative problems that reflect this low priority given to fee collection can be identified. Difficulties are encountered in determining the land actually irrigated; ambiguities arise with respect to responsibility for payment in cases where the land is not operated by the landowner; farmers are expected to come to the project office to pay the service charges, even though no bills are sent directly to them; and no effective system of penalties for non-payment has been implemented, at least in areas served by surface water. (In tubewell systems, the supply of water can be cut off for non-payment of fees.)

3.4.3.2 Indirect Financing Mechanisms

3-38 Administrative considerations are often one reason for using indirect rather than direct mechanisms of irrigation financing. Land taxes in Indonesia and Nepal have a long history, so that utilizing land taxes to capture a portion of the benefits of irrigation has the potential attraction of avoiding the need to create an entirely new administrative framework for irrigation financing. Methods of assessment, billing, collection and enforcement already exist. On the other hand, if the tax is to reflect effectively the increased productivity resulting from irrigation, assessment procedures need to permit reasonably rapid and accurate reassessments of land to reflect changes in productivity created by irrigation. Furthermore, the information requirements for an effective land tax are large, and even in

Indonesia, with its long history of land tax, the cadastral information needed for a sound land tax is inadequate in many parts of the country.

3-39 There are also likely to be certain administrative problems associated with an attempt to make a land tax serve as an effective means of financing irrigation services provided by the central government. If tax rates are raised substantially on irrigated land, then a distinction may be needed between land irrigated by government projects and land which is irrigated by completely farmer-managed systems, and which therefore receives no government irrigation services. But such a distinction, although appropriate from an equity perspective based on consideration of irrigation services, may be difficult to reconcile with the underlying equity principle of the land tax as being based on the productivity of the land. This could be an important consideration both in Nepal, where over 70 percent of the total irrigated land is served by farmer-managed systems, and in Indonesia, where the comparable figure is estimated to be about 20 percent. Another difficulty encountered in Indonesia is that the land tax (IPEDA) is basically a tax used to finance certain district government activities. It therefore would be politically and administratively difficult for the central government to use this tax to finance irrigation O&M.

3-40 The rice export tax structure of Thailand was established in the 1950's as a means of controlling exports, raising revenues and stabilizing domestic rice prices. Although such a tax distorts relative prices in the economy, it has frequently been justified on the grounds of its administrative simplicity. In contrast to a direct tax on individual farmers, where very large numbers of individuals each paying small amounts would be involved, administration of a tax on rice exporters requires dealing with a small number of individual exporters, each of whom pays a large sum.

3-41 Although the export tax structure was not established as a means of financing irrigation, it provides a source of general revenues to the government which has grown with the increased production and export of rice resulting from irrigation. Enforcement is relatively simple, and no additional administrative structure was necessary to capture the additional revenues generated as a result of irrigation. For these reasons, and given the lack of administrative structure for alternative direct measures for financing irrigation, this tax structure continues to be seen as a significant mechanism by which the government generates revenues to finance irrigation services. With decreases in world rice prices in recent years, however, and the related decreases in revenues generated by the export levies, the amount of revenues generated by this mechanism has declined considerably (Annex 1, Table A1.34).

3.4.4 Amounts of Resources Obtained

3-42 The amount of internally-generated revenues which an irrigation agency obtains to finance irrigation services depends on the charges levied on water users, on the rates of collection of these charges, and on the extent of secondary sources of income earned by the agency. Information from the five countries on the typical charges levied on farmers for irrigation services, on the typical revenues obtained by the irrigation agency, and on typical O&M

costs associated with the provision of the irrigation services are presented in Table 3. Resources generated from irrigation beneficiaries through indirect financing mechanisms are not included in the table.

3-43 In the case of Indonesia, the government makes no attempt to collect resources from the farmers to cover the cost of main system O&M. The amount of resources generated from the farmers for tertiary O&M varies considerably among projects. Taking as representative a figure of Rs 15,000 per ha (Annex 1, Table A1.2), the implication is that farmers contribute about two-thirds of the total amount spent for main system plus tertiary O&M.

3-44 In Korea, the average irrigation service fee levied on farmers of $196 per ha in 1983 covered about 93 percent of the average O&M costs. With average collection rates exceeding 98 percent, and with substantial amounts of secondary income earned from the assets of the semi-autonomous FLIAs, average revenues of the FLIAs were $251 per ha, or about 19 percent greater than the average O&M costs, thus resulting in a modest contribution of the FLIAs to capital costs.[11] The irrigation service fees paid by the farmers have two clearly defined portions: one for O&M and one for repayment of capital costs. Although the contribution of the FLIAs to capital recovery probably averages less than 10 percent of the total capital cost evaluated at market rates of interest (Annex 1, Table A1.11), the structure of the irrigation service fees is such that it is clear that the farmers, through the FLIAs, are acquiring ownership of the irrigation system.

3-45 Data from Nepal are fragmentary. If we assume a typical expenditure for O&M of about Rs 170 ($10) per ha, then the charge of Rs 100 per ha amounts to about 60 percent of the O&M costs. But with collection rates averaging only an estimated 20 percent, the actual resources acquired from the farmers probably amount to only about 10 percent of the O&M expenditures.

3-46 The Philippines is unique among the five countries studied in that the fees charged to the water users exceed average O&M costs. In 1984, the average annual assessment for irrigation service fees per ha of service area exceeded the average O&M fund releases per ha of service area by about 21 percent. But collections average only about 62 percent of assessments, so that the amount of resources actually collected by the NIA is approximately 75 percent of O&M costs. The remaining 25 percent is financed from NIA's secondary income.

---

[11] However, some of the sources of secondary income for the FLIAs involve implicit government subsidies (eg., through policies that permit the FLIAs to borrow money at low rates of interest while earning higher rates on short-term deposits). Furthermore, no effort has been made to adjust the O&M cost for the implicit subsidy associated with the very favorable rate given for electricity used to pump irrigation water. See Annex 4 for further discussion of these issues.

Table 3. Sources and Amounts of Revenues Earned or Collected by Irrigation Organizations, Compared to O&M costs

Country	O&M Cost ($/ha)	Irrigation Service Fees Levied		Approximate Percent of fees which are Collected	Revenues from Irrigation Service Fees		Revenues from Supplemental Income	Total Revenues	
		$/ha	% of O&M		$/ha	% of O&M	($/ha)	($/ha)	% of O&M
Indonesia	22[a]	N.A.[b]	N.A.[b]	N.A.[b]	15[a]	68	0 (?)	15	68
Korea	211[c]	196[c]	93	98[d]	192	91	59	251	119
Nepal	10[e]	6[f]	60	20[g]	1[h]	10	0	1[h]	10
Philippines	14[i]	17[j]	121	62[k]	10	75	36[l]	46	329
Thailand	27[m]	0	0	-	0	0	0	0	0

[a] Assuming a cost of Rp 15,000/ha for tertiary services (contributed by the farmers) and Rp 7,000/ha for main system O&M. Converted at Rp 994 = $ 1.00

[b] Information not available.

[c] Average figure for 1983 (see Table A2.24 in Annex 2). Converted at Won 795.5 = $ 1.00

[d] Average for 1983.

[e] Derived from Table A1.14 in Annex 1.

[f] Based on irrigation service fee of NRs.100/ha. Converted at NRs.17 = $ 1.00

[g] Estimated average figure based on data in Table A1.16 in Annex 1.

[h] Although this amount is collected by the irrigation agency, the funds flow to the central government and do not contribute to the agency's budget.

[i] Average O&M releases for 1984, from Table A1.28 in Annex 1.

[j] From Tables A1.26 and A1.28 in Annex 1, the average assessment per ha of service area was P 284 in 1984. Converted at P 16.7 = $ 1.00

[k] Average of the two most recent years for which complete data are available (1982 and 1983), from Table A1.27 in Annex 1.

[l] Includes $ 28 of interest and management fees derived from and mostly utilized for new construction activities.

[m] Average for 1984 of Baht 632 per ha, converted at Baht 23.6 = $ 1.00 (see Table A1.32 in Annex 1).

3.5 Controlling Expenditures

3.5.1 Budgeting for O&M

3-47 Although there are differences in detail, the fundamental nature of the processes by which O&M budgets in Indonesia, Nepal and Thailand are developed and approved are similar. In all three cases, a central government line irrigation agency must compete with other central agencies and ministries for approval of its budget request, which is subject to scrutiny and revision at the higher levels of the central government. This frequently means that the level of funding made available is less than that deemed necessary by the irrigation agency. In the case of Indonesia, the funds approved for O&M in recent years have generally been from 60 to 70 percent of the amounts requested (Annex 1, Table A1.1).

3-48 In the Philippines, the semi-autonomous NIA is responsible both for preparing and funding the budgets for O&M. The budget process is thus internal to NIA. Funding generally remains only about 60 percent of the desired level, however, due to inadequate resources available to NIA as a result of relatively low rates of collection of irrigation service fees (Tables 2 and 3). Because NIA earns income from secondary sources, it has been able to fund O&M at levels greater than would be possible if its revenues were limited to the collection of irrigation service fees.

3-49 In Korea, budgeting is decentralized to the FLIAs; however, the central government and provincial governments exert strong control over the process through the provision of detailed guidelines which the FLIAs must follow in preparing budget requests. Levels of funding for O&M appear to be adequate to permit satisfactory operation and maintenance of the irrigation systems.

3.5.2 Role of Farmers in O&M

3-50 The roles which farmers play in the O&M of government systems vary considerably among the five countries. In Indonesia, farmers have no authorized role in main system O&M, but complete responsibility for tertiary O&M. In the Philippines, main system O&M has, until recently, been the formal responsibility of the NIA. In recent years, NIA has experimented with arrangements by which responsibilities for portions of irrigation systems, beginning at the level of a lateral, can be turned over partially or completely to farmer groups. In a few cases, entire systems have been turned over to the farmers to operate and maintain.

3-51 Farmers generally have little formal responsibility for O&M in Nepal and Thailand. The extent to which farmers actually are involved in tertiary level O&M in these countries is not very clear. In land consolidation areas in Thailand, efforts are underway to form farmers' organizations with responsibility for the operation and maintenance of the tertiary facilities constructed under the land consolidation program.

3-52 In Korea, responsibility for O&M resides with the FLIAs. Although farmers are members, they have little direct involvement in the activities of

the FLIAs. It appears, however, that farmers are commonly called upon by the FLIAs to contribute some labor for the maintenance of the irrigation channels.

3.5.3 Accountability for O&M Expenditures

3-53 In all five countries, systems of upward financial and managerial accountability predominate for government irrigation systems. In Indonesia, Nepal, the Philippines and Thailand, accountability is upward to higher levels within the centralized irrigation agency (DGWRD, DIHM, NIA, and RID, respectively). The situation in Indonesia is somewhat more complicated by dual lines of accountability extending from the Provincial Public Works Departments to both the provincial government and the central government as represented by DGWRD. In Korea, accountability is upward from the semi-autonomous FLIAs primarily to the provincial governments and secondarily to the Ministry of Agriculture and Fisheries.[12]

3-54 Downward financial and managerial accountability to the users of irrigation water occurs in Indonesia with respect to expenditures for O&M at the tertiary level. It also exists in the Philippines in parts of government irrigation systems in which responsibility for O&M has been turned over to groups of farmers, and in communal systems which receive government support and subsidy for construction costs. Downward accountability also is found in the traditional communal systems (i.e., those built and operated in the absence of government assistance) in the countries studied.[13]

3-55 In systems of upward accountability, there is a tendency for more concern for financial accountability (insuring the cost-effective use of funds for authorized expenditures) than for managerial accountability (insuring cost-effectiveness in the types of expenditures that are authorized). Managerial accountability tends to be limited to the control imposed through the mechanism of budget categories. An exception occurs in the case of Korea, where, through very detailed budget guidelines (which include, for example, the maximum temperature to which FLIA offices can be heated in the winter), the government attempts to exercise considerable managerial control over the details of how funds are used.

3-56 In systems of downward accountability, both financial and managerial accountability are likely to receive considerable attention. In government-assisted communal irrigation projects in the Philippines, for example, where water users' organizations are responsible for repayment of a portion of the government's construction costs, farmers have sometimes shown a keen interest in assuring that the use of items such as fuel for jeeps is limited to direct support of the construction activities. They have also sometimes exerted

---

[12]As discussed in Annex 8, systems of upward accountability exist in many other Asian countries, including Bangladesh, India, Pakistan and Sri Lanka.

[13]As discussed in Annex 8, systems of downward accountability can also be found in many other countries in Asia, Europe and North America.

pressure to eliminate the construction of structures which they see as unimportant. Systems of downward accountability are thus more likely to result in levels and types of expenditures which are viewed by the users of irrigation as appropriate, and therefore worthy of their financial support.

3.6 Ability of Water Users to Pay for the Cost of Irrigation Services

3-57 In this Section, three approaches are used to analyze the ability of water users to pay for the cost of irrigation services. Under the first approach, irrigation's net benefits to the water users (exclusive of payments related to the irrigation services) are estimated. Benefit recovery ratios (the proportion of these net benefits which must be paid either directly or indirectly) are calculated for alternative policies with respect to water charges. The second approach involves estimating the net income earned from irrigated cropping, and comparing it with the magnitude of direct and indirect payments for water which would be required under alternative policies. The third approach compares irrigation-related payments with gross income earned from irrigated production. To facilitate comparisons among the five countries, all values have been calculated in terms of equivalent amounts of paddy per ha per year.

3-58 Total payments (both direct and indirect) by water users related to the services of gravity irrigation systems are presented in Table 4 under alternative policy assumptions for the five study countries. Because Korea's high rice price policy has important implications for the ability of farmers to pay for irrigation services, the table shows both the payments required at domestic prices, and, in parentheses, the amounts that would have been required in 1983 had domestic prices been allowed to drop to a level consistent with unrestricted imports from the world market, assuming all other prices and input levels remained constant.

3-59 The first column of the table shows the average or typical total amounts which farmers are charged under current policies. They include obligations in cash, in paddy and in labor, expressed as the equivalent amount of paddy. In the case of Indonesia, the figure includes the estimated amounts paid for tertiary O&M through local water users' associations, plus the estimated increase in IPEDA tax resulting from irrigation. For Nepal, the payment is based on an assumed cropping intensity of 1.66, while for the Philippines, the payment assumes a cropping intensity of 1.0 in the wet season and 0.33 in the dry season. For Thailand, the estimate is based on the implicit taxation (due to the rice export tax system) of the farmer's marketings of the additional paddy produced as a result of irrigation. The calculation is based on an estimated implicit tax rate for 1984 of 6.2 percent of the farmgate market price (see Annex 7), and an estimated increase in production resulting from irrigation of 1,375 kg per ha (Annex 1, Tables A1.35 and A1.36).

3-60 The second column of the table shows the estimated amounts that would be needed if current policies were modified so that the irrigation service fees per ha were equal to the costs of O&M. This represents the level of total payments that would be necessary to provide full recovery of O&M costs via an irrigation service fee, assuming that collection rates are 100

Table 4. Total Direct and Indirect Irrigation-Related Payments by Water Users under Alternative Policy Assumptions, Five Study Countries (kg paddy/ha/year)

Country	Policy			
	Actual	Actual modified to Set Irrigation Service Fees Equal to O&M Costs	Actual modified to Set Irrigation Service Fees Equal to O&M plus Full Recovery of Capital Costs	
			Moderate Capital Cost	High Capital Cost
Indonesia	252	322	1,853	3,756
Korea[a]	333 (702)	357 (753)	1,833 (3,865)	2,642 (5,571)
Nepal	75	136	1,041	1,703
Philippines	213	176	944	2,095
Thailand[b]	85[c] (303)	308 (526)	1,546 (1,764)	2,785 (3,003)

[a] Figures in parentheses represent the amounts that would be required if 1983 domestic prices for paddy (504 won/kg) were allowed to drop to a level consistent with 1983 world prices (estimated to be 239 won/kg - see Table A1.6 in Annex 1), while all other prices and input levels remained constant.

[b] Figures in parentheses represent the values that would apply if the implicit tax on the farmgate price of paddy were 22 percent, as estimated for the late 1970's in World Bank, "Thailand: Case Study of Agricultural Input and Output Pricing" Staff Working Paper No. 385, 1980, p.50.

[c] Based on an estimated implicit tax on the farmgate price of paddy of 6.2 percent (see Annex 6) for 1984, applied to the estimated increase in production due to irrigation of 1,375 kg paddy per ha.

Source: Tables A1.4, A1.5, A1.12, A1.13, A1.20, A1.21, A1.31 and A1.36 in Annex 1.

percent, and that policies regarding indirect charges (for Indonesia and Thailand) remain unchanged. The last two columns of the table indicate the charges necessary for the per ha amounts charged to equal the full cost of both O&M and capital investment, under two alternative assumptions about the magnitude of the capital costs.

3-61 Benefit Recovery Ratios. Information on actual (as opposed to projected) net benefits resulting from irrigation is limited. From the data available, the following crude estimates have been made to indicate broad orders of magnitude for the net (i.e., after deducting increased production costs) benefits of irrigation, in terms of kg of paddy per ha per year.

Indonesia	1,200 - 3,300
Korea	1,000 - 1,300
Nepal	1,400
Philippines	2,100
Thailand	1,000

3-62 The figures for Indonesia are based on findings from two irrigation project areas reported in a study conducted in 1980 by a team from Gadja Mada University (1982) (Annex 1, Table A1.3). They are based on comparisons between conditions in the irrigated areas and conditions in nearby rainfed areas. The low estimate for Korea is derived from provincial data for the whole country on the average difference in yields between irrigated and non-irrigated fields (Annex 1, Table A1.7). The high figure comes from an ex post evaluation study of five medium-scale irrigation projects funded by the World Bank (Kim 1982). The data from Nepal are derived from data on two projects (ADB 1982), assuming a wet season cropping intensity of 1.0 (paddy) and a dry season intensity of 0.66 (wheat) (Annex 1, Table A1.15). The Philippine data are calculated from tables in Annex 6, and are based on an assumed cropping intensity of 1.0 in the wet season and 0.75 in the dry season (Annex 1, Table A1.30). The figure for Thailand is based on data in Annex 1, Tables A1.35 and A1.36, using the assumption of a cropping intensity of 1.0 in the wet season and 0.33 in the dry season.

3-63 From the above figures and those of Table 4, estimated benefit recovery ratios under alternative policies in the five countries were calculated (Table 5). Under actual policies, the estimated benefit recovery ratios are 5 percent for Nepal, 9 percent for Thailand, 10 percent for the Philippines, 8 to 21 percent for Indonesia, and 26 to 33 percent for Korea. If paddy prices in Korea were allowed to drop to levels consistent with 1983 world market prices, and assuming all other prices and inputs remained unchanged, the estimated range for the Korean benefit recovery ratio would be from 54 to 70 percent. In the case of Thailand, the recent decline in world rice prices and the related decrease in Thailand's export taxes have reduced the level of implicit taxation considerably from levels that prevailed in the late 1970's and early 1980's. Based on an estimate of the implicit tax in the late 1970's (World Bank 1980), the benefit recovery ratio that prevailed in Thailand at that time is estimated to be 30 percent.

3-64 For recovery of all O&M costs, the estimated benefit recovery ratios rise in all cases except for the Philippines, where the ratio drops by three

Table 5. Estimated Benefit Recovery Ratios under Alternative Financing Policies in the Five Study Countries (percent)

Country	Policy			
	Actual	Actual modified to Set Irrigation Service Fees Equal to O&M Costs	Actual modified to Set Irrigation Service Fees Equal to O&M plus Full Recovery of Capital Costs	
			Moderate Capital Cost	High Capital Cost
Indonesia				
low estimate[a]	8	10	56	114
high estimate[a]	21	27	154	313
Korea [b]				
low estimate[a]	26 (54)	27 (58)	141 (297)	203 (429)
high estimate[a]	33 (70)	36 (75)	183 (387)	264 (557)
Nepal	5	10	74	122
Philippines	10	7	43	98
Thailand[c]	9 (30)	31 (53)	155 (176)	279 (300)

[a] Low and high estimates result from alternative estimates of the net benefits of irrrigation.

[b] Figures in parentheses represent the estimated benefit recovery ratios that would prevail if domestic prices of paddy were allowed to drop to a level consistent with 1983 world prices (estimated to be 239 won/kg paddy - see Table A1.6 in Annex 1), while all other prices and input amounts remained constant.

[c] Figures in parentheses represent the values that would apply if the implicit tax on the farmgate price of paddy were 22 percent, as estimated for the late 1970's in World Bank, "Thailand: Case Study of Agricultural Input and Output Pricing" Staff Working Paper No.385, 1980, p.50.

Source: Derived from Table 4 and estimates of net benefits presented in text.

percentage points. This reflects the fact that only in the Philippines is the per ha charge for irrigation services greater than the per ha O&M cost. For Indonesia, full O&M cost recovery, while also retaining the existing IPEDA, results in benefit recovery ratios ranging from 10 to 27 percent. In Korea, the estimates of the average benefit recovery ratio range between 27 and 36 percent at actual domestic prices. Full O&M cost recovery in Nepal implies a doubling of the benefit recovery ratio to a total of 10 percent. In Thailand, retaining the implicit taxation based on rice export taxation policies while implementing full O&M cost recovery through an irrigation service fee would increase the benefit recovery ratio to 31 percent at the current level of implicit taxation, and to 53 percent at the level that prevailed in the late 1970's.

3-65 The last two columns in Table 5 show the estimated benefit recovery ratios under the assumption that irrigation service fees are raised to cover full costs of both O&M and capital investment. Even with the lower of the two assumptions about the magnitude of the investment costs, the estimated benefit recovery ratios exceed 100 percent in all cases except for Nepal and the Philippines, and for one of the estimates for Indonesia. Estimates based on higher investment costs result in estimated benefit recovery ratios generally over 100 percent, and most exceeding 200 percent.

3-66 Based on the estimates presented in Table 5, it can be concluded that in all five countries, whenever there is reasonable irrigation service, the incremental benefits derived from irrigation will be adequate to make possible the full recovery of irrigation O&M costs and still leave the farmers with significant increases in net incomes due to irrigation. The only possible exception would be in the case of Korea if a change in domestic rice price polices were implemented to allow prices to drop to levels consistent with world market conditions. In such a situation, the average benefit recovery ratios would be much higher than in the other four countries. This reflects the fact that the O&M costs per ha are much higher in Korea than in the other countries.

3-67 Table 5 also indicates that the benefits of irrigation are not great enough to make possible the full recovery of O&M plus capital costs in any of the five countries without making farmers worse off than they were before the introduction of irrigation.

3-68 Net Income from Irrigation. Estimates of net income per irrigated ha in each of the five countries under alternative policies regarding irrigation service fees are presented in Annex 1 (Tables A1.4, A1.5 for Indonesia; Tables A1.12 and A1.13 for Korea; Tables A1.17 - A1.21 for Nepal; Tables A1.30 and A1.31 for the Philippines; and Tables A1.35 and A1.36 for Thailand). The net income estimates are presented as returns to all family resources (including land, labor, management and capital) under the assumption that the family owns all of the land farmed. In cases where all or a portion of the farm is rented, the net income to the farm family would be reduced.

3-69 In Table 6, these estimates of net income are compared with the amounts of irrigation-related payments required under the four alternative

Table 6. Total Direct and Indirect Irrigation-Related Payments by Water Users as a Percent of the Net Returns to the Farm Family Resources[a], under Alternative Policy Assumptions, Five Study Countries

Country	Policy			
	Actual	Actual modified to Set Irrigation Service Fees Equal to O&M Costs	Actual modified to Set Irrigation Service Fees Equal to O&M plus Full Recovery of Capital Costs	
			Moderate Capital Cost	High Capital Cost
Indonesia	6.5	8.5	81.6	1,023.4
Korea[b]	6.5 (19.5)	7.0 (19.8)	50.5 (872.5)	93.7 (-)[c]
Nepal				
-assuming low productivity agriculture	2.8	5.2	60.1	159.2
-assuming high productivity agriculture	1.5	2.8	26.1	51.3
Philippines	6.3	4.1	33.7	133.0
Thailand[d]	4.4 (15.7)	18.1 (30.9)	351.3 (400.2)	-[c] (-)[c]

[a] Assuming that all land is owned by the family

[b] Figures in parentheses represent the estimated ratios that would prevail if domestic prices of paddy were allowed to drop to a level consistent with 1983 world prices (estimated to be 239 won/kg paddy - see Table A1.6 in Annex 1), while all other prices and input amounts remained constant.

[c] Implied net returns are negative.

[d] Figures in parentheses represent the values that would apply if the implicit tax on the farmgate price of paddy were 22 percent, as estimated for the late 1970's in World Bank, "Thailand: Case Study of Agricultural Input and Output Pricing" Staff Working Paper No.385, 1980, p.50.

Source: Derived from Table 4 and the Annex 1 tables cited in Table 4.

policies. The comparison is presented as the amount of the payment as a percentage of the net income remaining with the water user after payment has been made. Under the actual policies of the five countries, the estimates range from 1.5 percent under high productivity agricultural conditions in Nepal to 6.5 percent in Indonesia and Korea. Although the 1984 estimate for Thailand is 4.4 percent, the corresponding figure for the late 1970's is 15.7 percent.

3-70 Retaining current policies regarding indirect charges related to irrigation, but raising irrigation service fees to a level equal to O&M costs results in relatively modest changes in the percentage of net income needed to pay for water, except in the case of Thailand, where the figure rises from 4.4 to 18.1 percent (column 2 of Table 6). The percentage nearly doubles in the case of Nepal, but still remains lower than for the other countries. Raising irrigation service fees still further to cover the full capital cost as well as O&M leads to total irrigation-related payments generally in the range of 50 to 80 percent of the net income of the farmers in the case of moderate capital costs, and to even higher rates with high capital costs.

3-71 The implications of the figures of Table 6 are generally consistent with conclusion drawn from Table 5, namely, that farmers generally have the ability to pay for the full cost of irrigation O&M through irrigation service fees, but that payment in addition for the full capital cost is not feasible.

3-72 Payments as a percentage of gross income. Comparisons of payments for irrigation services with gross income are conceptually less meaningful than either of the previous two approaches to analyze the farmers' ability to pay, but they avoid the need for data on farm income, which often are limited to a few specific projects or surveys. Estimates of the typical percentages of gross income which are required for irrigation-related payments under the four alternative policy situations are presented in Table 7. Under the actual policies of the five countries, payments are about 5 percent of production in Korea, from 2.5 to 3.5 percent for Indonesia, Philippines and Thailand, and from one to two percent for Nepal. The corresponding rate for Thailand in the late 1970's was nearly 10 percent.

3-73 The conclusions from this comparison of the percentage of gross production needed to pay for irrigated-related charges under the four policies are similar to those drawn from the previous two comparisons. With the exception of Thailand, increasing irrigation service fees to cover the full cost of O&M, with other policies remaining unchanged, results in only a modest increase in the amount of the crop which must be paid. But attempting to further raise the irrigation service fees to also cover the full capital cost would require payment of a very high proportion of the crop -- generally from 20 to 30 percent for moderate-cost irrigation projects, and 30 to 50 percent for high-cost irrigation projects. For Thailand, imposing an irrigation service fee without changing the rice export tax system could cause water-related payments to rise to levels that are considerably higher than in any of the other countries. Although this is less of a problem now than in past years, future increases in world rice prices could lead to a return to the higher levels of implicit taxation which prevailed in the recent past.

Table 7. Total Direct and Indirect Irrigation-Related Payments by Water Users as a Percent of Gross Production under Alternative Policy Assumptions, Five Study Countries

Country	Policy			
	Actual	Actual modified to Set Irrigation Service Fees Equal to O&M Costs	Actual modified to Set Irrigation Service Fees Equal to O&M plus full Recovery of Capital Costs	
			Moderate Capital Cost	High Capital Cost
Indonesia	3.5	4.4	25.4	51.5
Korea[a]	5.1 (10.8)	5.9 (11.6)	28.2 (59.5)	40.6 (85.7)
Nepal				
-Assuming low productivity agriculture	2.2	3.9	30.1	49.2
-Assuming high productivity agriculture	1.2	2.2	16.5	27.0
Philippines	3.4	2.2	14.5	32.9
Thailand[b]	2.7 (9.7)	9.9 (16.8)	50.1 (57.1)	90.5 (97.4)

[a] Figures in parentheses represent the value that would prevail if 1983 domestic prices in Korea were allowed to drop to a level consistent with 1983 world prices, while all other prices and input levels remained constant.

[b] Figures in parentheses represent the values that would apply if the implicit tax on the farmgate price of paddy were 22 percent, as estimated for the late 1970's in World Bank, "Thailand: Case Study of Agricultural Input and Output Pricing" Staff Working Paper No. 385, 1980, p.50.

Source: Derived from Table 4 and Annex 1 tables cited in Table 4.

3.7 Evaluation of Irrigation Financing Methods in the Five Countries

3.7.1 Irrigation System Performance

3-74 More Efficient Operation of Irrigation Facilities. There is little in the financing mechanisms used in Nepal, Thailand and at the main system level in Indonesia that enhances the efficiency of irrigation management. Because of the centralized nature of the agencies managing irrigation systems, and their financial dependence on the central government, financial procedures are not a means for encouraging either improved managerial performance through feedback from water users, or increased cooperation and participation of water users in O&M.

3-75 Financing mechanisms used for tertiary-level O&M in Indonesia have the potential to encourage both efficiency in management and increased farmer cooperation because of the internal linkages between decisions for mobilizing resources from water users and decisions for utilizing those resources to provide irrigation services. To what extent this potential is realized is uncertain, although individual cases have been studied that appear to exhibit very effective management. The fact that the government is involved in some infrastructure development at the tertiary level might cause water users to develop the perception that responsibility for the tertiary system belongs to the irrigation agency, rather than to the local village or water users' association. If this were to occur, the ability of the association to mobilize resources from the farmers might be impaired seriously.

3-76 The situation in the Philippines differs from the above three countries in one key respect: the implementing agency for irrigation projects (NIA) is responsible for generating a portion of its funds from the users of irrigation services. For many years this responsibility had little impact on NIA's management procedures, because supplemental funding was available through appropriations from the central government. But the reduction and subsequent elimination of these funds have increased NIA's financial autonomy, and thereby its reliance on funds collected from water users. This has led to management changes designed both to enhance the willingness of water users to pay for irrigation services and to reduce O&M costs.

3-77 It seems probable that these changes which NIA has introduced have increased the overall effectiveness of management performance, although more specific judgement will have to await more detailed case studies of the results of some of these experiments. One possible negative consequence should be noted, however. In selecting the systems for which complete O&M responsibility is to be given to the farmers, NIA has given priority to "marginal" or "non-viable" systems, defined to be those for which the costs of O&M exceed the revenues generated from irrigation service fees. If the reason for this imbalance lies either in unusually high O&M costs due to difficult physical conditions or poor design, or in very low rates of farmer payment because of poor performance caused by design problems, then giving the farmers responsibility for these "problem" systems may only lead to a downward spiral in their performance, as the resources available for O&M decline from their previous level.

3-78 Problems with management performance in Korea were reportedly one of the factors leading to the decision in 1961 to bring the FLIAs under government rather than farmer control. To what extent management performance has improved under this revised arrangement is uncertain. A case study of one FLIA led Wade (1982) to conclude that irrigation management was not very efficient. In one sense this lack of efficiency may be appropriate, because water supplies are relatively abundant most of the time. But Wade found that construction of costly "hardware" (canal lining and pumping facilities to supplement water supplies) was a common response to problems that might have been dealt with by improved management. As a result, the failure to achieve efficiency in management is manifested more in high O&M costs than in poor system performance. This may be part of the explanation for the very high O&M costs found in Korea as contrasted with the other study countries. Although one might expect Korea's strong financial reliance on irrigation service fees to generate pressures from water users for an efficient balance between "hardware" and improved management, Wade argues that the combination of strong penalties for non-payment of irrigation fees and lack of farmer involvement in the affairs of the FLIAs severely limits the extent to which water users can effectively influence these decisions.

3-79 <u>More Efficient Utilization of Water.</u> The primary financing mechanisms for government irrigation projects in the five countries studied have virtually no impact on the farmers' efficiency of water use. Irrigation service fees based on the area irrigated are used in Korea, Nepal and the Philippines. Area based charges are also imposed by water users' groups at the tertiary level in Indonesia. These fees provide no incentive for a farmer to economize on the use of water. Some small efficiency gains may occur where the fees are differentiated according to whether or not rice is grown, as occurs in the Philippines and at the tertiary level is some projects in Indonesia. Even in these cases, however, evidence is lacking on the extent to which the differential in rates is consistent with enhanced economic efficiency. Water pricing can be found in a few small pump projects in Nepal, but its overall significance in Nepal's financing policies is minimal.

3-80 Indonesia, Nepal and Thailand also utilize indirect means of financing irrigation services. Indonesia and Nepal each have a land tax, while Thailand has a tax on rice exports. As would be true of any indirect financing mechanism, these taxes have no effect on the efficiency of water use by the farmers.

3-81 With respect to communal irrigation systems, one example of a financing mechanism which does encourage efficiency in water use has been documented in a case study in Nepal. In the system studied, the distribution both of irrigation water and of financial obligations is based, not on the area irrigated, but rather on the number of "shares" which a water user holds. Originally issued in proportion to participation in the investment to construct the system, the shares may be sold separately from the land, and command a high price. As a result, farmers have an incentive to economize on their use of water in order to be able to sell a portion of their shares for cash. The gain in efficiency is indicated by the fact that as improvements in the water supply to the system were made over a period of several years,

the area irrigated by the system doubled. By contrast, in another communal project studied by the same researcher, and in which water was allocated in proportion to a farmer's area rather than in proportion to water rights, the improvement of the water supply to the system resulted in more convenient methods of water distribution within the system, but no increase in the total area irrigated (Martin 1986).

3.7.2 Improved Investment Decisions

3-82 With the possible exceptions of Korea and the Philippines, it is doubtful that the financing policies of the study countries have led to better investment decisions.[14] In Indonesia, Nepal and Thailand, institutional separation of responsibility for investment decisions from control over public funds generated by irrigation makes it unlikely that realistic expectations regarding potential inflows of revenue resulting from irrigation investments play a significant role in investment decisions.

3-83 In the Philippines, recent efforts to make NIA responsible for the repayment of foreign loans incurred for the construction of irrigation projects have created a greater linkage between investment decisions and the flow of resources resulting from those decisions. Already this has caused NIA to reconsider the desirability of undertaking new construction involving foreign loans. In the long run, giving NIA responsibility for at least a portion of the repayment of future foreign loans incurred should encourage better investment decisions.

3-84 In Korea there are clear linkages between investment costs and irrigation service fees. To what extent these linkages have contributed to enhancing the efficiency of investment decisions is difficult to determine. On the one hand, government policy exhibits a clear concern about the level of fees which farmers must pay for irrigation services. Proposed projects which would require an increase in the fees paid are therefore likely to be evaluated more carefully than would be the case if there were no linkage with irrigation service fees. On the other hand, the government has developed a set of special rules breaking the link between investment costs and irrigation service fees in situations where an investment would otherwise result in unacceptably high irrigation service fees. Although this reduces the linkage between additional investment costs and additional farmer payments, it implies increased outflows of government funds in the form of subsidies. To what extent concern over this increased outflow may act to encourage a more careful evaluation of proposed investments is uncertain.

3.7.3 Improved Fiscal Position of the Government

3-85 In all five countries studied, the provision of irrigation services involves a substantial net outflow of public funds. These outflows are

---

[14] The literature review suggests that this is a common situation in many other countries as well (see Annex 8).

generally consistent with broad government policy objectives with respect to rural development and food self-sufficiency.[15]

3-86 For Indonesia, Nepal and Thailand, if only inflows of public funds resulting from direct financing mechanisms are considered, then the full amount of capital cost and part (Indonesia and Nepal) or all (Thailand) of the O&M costs of irrigation are financed by government. When indirect financing mechanisms are also taken into consideration, it is more difficult to make definitive statements. For Indonesia, the additional revenues resulting from IPEDA may approximately equal the outflow of central government funds for O&M. In Nepal, the real value of the land tax has declined substantially over time, so that gross inflows are probably now considerably less than outflows for O&M. In Thailand, rough estimates of the maximum effect of irrigation on public revenues from rice export taxes and levies are 3.0 billion baht in 1980, 1.7 billion in 1982, and 0.7 billion in 1984 (Annex 1, Table A1.34). The 1980 figure is roughly triple the total amount expended by RID on O&M in that year. For 1982, the estimated revenues are approximately 50 percent greater than total expenditures for O&M, but the estimate for 1984 is only 39 percent of the O&M budget for that year (see Annex 1, Table A1.33). Indirect revenues generated as a result of irrigation have thus exceeded O&M costs in the past, but are now considerably lower than O&M expenditures.

3-87 In the Philippines, linkage between inflows and outflows for O&M associated with NIA's financial autonomy has led NIA to attempt to reduce the net outflow of funds for O&M. NIA has taken steps both to decrease outflows (by measures such as trimming O&M costs and turning certain O&M responsibilities over to the farmers), and to increase inflows by providing better service and increasing incentives for payment.

3-88 In Korea, linkages between inflows and outflows of funds exist for both capital costs and O&M expenditures. Outflows for O&M are fully balanced by inflows of funds to the FLIAs, although a portion of these inflows may represent indirect government subsidies (and thus outflows at a higher level of government). In the case of capital costs, there is a large net outflow of public funds, equivalent to over 90 percent of total real cost (Annex 1, Table A1.10 and A1.11). These funds are channeled through the Ministry of Agriculture and Fisheries (MAF). For the portion of capital costs which are reimbursed by the FLIAs, the inflows accrue to the MAF, thus giving it a vested interest in the revenues of the FLIAs.

3.7.4 More Equitable Income Distribution

3-89 All five countries studied show a net transfer of public funds to the irrigation sector. There is thus a redistribution of income from the general taxpayer to the beneficiaries of irrigation, including not only farmers, but other indirect beneficiaries such as landless laborers and those involved in the marketing of farm inputs and outputs. In the case of Thailand with its

---

[15] It appears that irrigation tends to involve a net outflow of public funds in most countries of the world (see Annex 8).

rice export tax, there is also a tendency to redistribute income from rice farmers to consumers and to non-rice farmers; and from rice farmers producing under rainfed conditions to rice farmers with irrigation. Indonesia and Nepal, through their land taxes, may cause some redistribution of income from landowners to landless. The land tax of Indonesia also provides for some redistribution of income from large to small farmers, due to differentials based on farm size which are explicitly incorporated into the tax rates.

3-90 None of the five countries has an explicit policy for levying financial obligations on indirect beneficiaries of irrigation. To the extent that the exporters of rice in Thailand are indirect beneficiaries of irrigation, the Thai export tax system could be considered to be a mechanism to capture some of these benefits; however, exporters are generally able to pass the tax back to the farmers through lower farm prices for rice. Thus the incidence of this tax falls primarily on farmers, rather than on exporters. The Philippines has taxes on rice millers and traders which may capture some of the indirect irrigation benefits earned by these groups. To the extent that the land taxes in Indonesia and Nepal have relatively current market-based assessments on non-agricultural land, they may capture a portion of the indirect benefits of irrigation flowing to owners of land in areas where economic activity and wealth generally increase as a result of irrigation. But if, as seems likely, assessments do not relate closely to current market conditions, then these taxes probably capture only a very small portion of the indirect benefits.

4. Conclusions

4-01 Irrigation financing methods can be categorized as utilizing (a) water prices (whereby payments vary with demand-determined consumption levels); (b) irrigation service fees (compulsory payments usually based on area); (d) general taxes (compulsory payments levied with no direct reference to irrigation benefits); (d) implicit taxation (manipulation of domestic input and output prices), and (e) supplemental income (income earned by an irrigation agency from sources other than charges on water users).

4-02 Irrigation financing policies must be evaluated in terms of their effects on: (a) irrigation system performance (either through more effective operation of the irrigation facilities or through more efficient water use decisions by farmers); (b) investment decisions; (c) the government's fiscal position; and (d) income distribution among groups in the nation.

4-03 Cost recovery is an inappropriate focus for evaluating irrigation financing policies. The optimal level of cost recovery is neither obvious nor something which can be objectively determined. It is entirely dependent on the optimal level of charges determined with reference to the four types of effects noted in the preceding paragraph. The optimal level of cost recovery from direct beneficiaries could thus range from zero to an amount exceeding 100 percent; however, it is difficult to find examples of large-scale irrigation projects in any part of the world where financing mechanisms that have resulted in cost recovery even close to 100 percent.

4-04 The effects of any specific financing mechanism depend on the institutional arrangements under which responsibilities are established for the four processes of allocating resources to irrigation; implementing irrigation services; collecting resources from beneficiaries; and controlling the resources collected. The key institutional distinction is between (full or partial) financial autonomy, whereby at least partial responsibility for all four processes are combined in an irrigation agency, and financial dependence, whereby the irrigation agency has no control over funds collected from water users, and is thus dependent on resources allocated to it through the general government budgetary process.

4-05 If a financing mechanism is to improve system performance through encouraging better management, a degree of financial autonomy is needed to link the provision of the irrigation services with the collection of and control over resources from the water users. This is more important than the specific nature of the mechanism used to collect from the water users.

4-06 If a financing mechanism is to improve system performance by encouraging the active cooperation and involvement of the water users in O&M, the mechanism must give the farmers a sense of ownership of the irrigation system by giving the water users a clearly defined and accepted financial responsibility for a portion of the capital costs. This implies both an institutional context of financial autonomy, and the involvement of the potential water users in the planning and decision-making process prior to the construction of the project. These institutional arrangements are more important than the specific nature of the financing mechanism.

4-07 If a financing mechanism is to improve investment decisions, an institutional linkage is needed between the investment decision process and the financial viability of agencies (both national and international) responsible for investment decisions. Again, this institutional arrangement is more important than the specific nature of the financing mechanism.

4-08 Irrigation often creates substantial indirect benefits to those who do not engage in irrigated farming. Financing mechanisms specifically designed to capture a portion of these benefits are seldom found. This may reflect both the difficulty of identifying and measuring such benefits and the feeling that given their rather diffuse and widespread nature, they are most efficiently captured through the existing general tax structure. This provides a rationale for financing a portion of the cost of irrigation from general tax revenues.

4-09 Sophisticated financing mechanisms which utilize water pricing can influence individual water use decisions in accordance with economic efficiency principles. These mechanisms require a higher degree of physical control over the distribution of water than typically prevails in the study countries. They are generally not found anywhere in the world in gravity systems characterized by large numbers of small farmers for whom rice is a predominant crop, as under such conditions these mechanisms are difficult to implement and costly to administer.

4-10 Many of the frequently cited inefficiencies of water use in irrigation projects stem more from inadequate control over the distribution of the supply of water than from failure to regulate demand through prices. Supply control can reduce wastage of water associated with excessive amounts of water flowing through uncontrolled canals and ungated turnouts onto fields and into drainage channels. It may also encourage more efficient use of water at the farm level by imposing a degree of water scarcity on the farmers. A substantial portion of the large efficiency gains which are sometimes expected from a demand-based pricing system would thus most probably be realized by implementation of the pre-requisite supply control.

4-11 The principal direct financing mechanisms used in the study countries all involve irrigation service fees charged at a flat rate per unit area, sometimes differentiated to account for factors such as cropping intensity, and type of crop. Except for a few pump projects, water pricing is not used in the financing of government irrigation in the study countries.

4-12 Both institutional arrangements and perceptions of fairness affect the degree of uniformity of the level of irrigation service fees levied. Financial autonomy in the context of decentralization, as occurs in Korea and at the tertiary level in Indonesia, implies differences in fees among projects. Uniformity of fees is possible in situations of both centralized financial autonomy (as in the Philippines) and centralized financial dependence (as in Nepal). But even where uniformity of fees is possible, perceptions of fairness related to obvious differences in either costs or benefits may lead to differentiation of irrigation service fees among or even within projects. As perceptions of fairness are highly specific to individual situations based on social, cultural, political and historical considerations, no general conclusion can be drawn about the optimal approach in situations where uniform fees are possible.

4-13 When irrigation services are satisfactory, water users have the ability to pay the full cost of O&M in all five study countries. Any attempt to require the water users to pay for more than a small share of the capital costs in addition to O&M appears unrealistic in all five countries.

4-14 In Korea, although the average total amount paid directly by farmers through irrigation service fees is less than the average total cost of O&M, the irrigation service fees have clearly defined portions for O&M and for capital repayment. The FLIAs probably contribute an average of less than 10 percent of the full capital costs (measured at market rates of interest); however, the structure of the irrigation service fees is such that it is clear that the FLIAs -- and through them, the farmers -- are acquiring ownership rights in the irrigation system. Similar arrangements are not found in the financial mechanisms used in the other study countries.

4-15 Irrigation service fees are set in cash in Korea and Nepal, but are denominated in terms of paddy in the Philippines. Individual water users' associations in Indonesia may have both "in cash" and "in kind" components. The advantage of linking the level fees to paddy is particularly pronounced for a centralized agency which, because of its national visibility, may encounter political resistance to efforts to increase the nominal level of

fees. If fees are set in cash, this makes it difficult to maintain their "real" level (in terms of purchasing power) in the face of inflation.

4-16 An analysis of prospects for increasing the level of funds collected from irrigation service fees needs to distinguish carefully between the amounts that are levied and the rates of collection of the amounts due. If fees are levied at a level which is satisfactory relative to costs, but collections are low, an irrigation agency's effort to increase its total revenues by raising the level of fees is likely to be seen by water users as unfair, and may lead to further deterioration in the rate of collection.

4-17 Rates of fee collection vary considerably among Korea (over 98 percent), Nepal (about 20 percent) and the Philippines (about 62 percent). While political and socio-cultural factors cannot be ignored in considering the reasons for these differences, the importance which irrigation agencies place on fee collection is a key determinant of collection rates. In Korea great emphasis is placed on achieving 100 percent rates of collection. This is reflected in the amount of staff effort that goes into the entire process of administering irrigation service fees, in the internal incentive structure which the FLIAs develop for their staff, and in incentives given to water users to pay their fees. In the Philippines, the increased importance which NIA now attaches to fee collection as compared with several years ago is apparent. By contrast, in Nepal there is little evidence that much importance is attached to the matter.

4-18 The importance which irrigation agencies in the study countries place on collection of irrigation service fees is related to the institutional context within which they operate. In Korea, the FLIAs have been financially autonomous agencies for a long period of time, and their internal incentives to emphasize high rates of fee collection are well established. Over time, rates of fee collection have risen from levels of 70 to 80 percent in the 1950s to the current rates of nearly 100 percent. In the Philippines, NIA has been placed in a position of true financial autonomy only in the last few years. While levels of fee collection are still not high, they have improved in recent years in response to NIA's increased efforts in this direction. In Nepal, the DIHM operates in the context of financial dependence, which provides no internal incentives to increase fee collection.

4-19 Another factor affecting rates of collection of irrigation service fees is the sanctions that can be brought to bear on those who do not pay. In Korea, irrigation service fees are treated administratively as taxes, and the same enforcement mechanisms as apply to other taxes can be used if necessary. The Korean socio-cultural situation also supports strong social sanctions against those who do not pay. Both Nepal and the Philippines lack strong sanctions against those who do not pay their fees. In the case of the Philippines, NIA has attempted to counter the lack of sanctions by creating financial incentives to local water users' associations that would cause these organizations to mobilize social pressures on their members to pay.

4-20 Secondary income is a frequently overlooked but important source of financing. In Korea, secondary income accounts for approximately 25 percent of the total revenues of the FLIAs. Secondary income is also important to

NIA in the Philippines, although its role in O&M is somewhat difficult to assess because much of it is derived from, and committed to new construction. But in 1984, approximately 25 percent of the total expenditures for O&M were financed through secondary income. Secondary income is also important in many local water users' organizations in Indonesia, and in many other places in the world, including Taiwan, China, southern India and the United States.

5. Recommendations

5-01 Wherever possible, government irrigation agencies should operate within an institutional context of (partial) financial autonomy whereby the agency's financial status depends in part on the revenues it is able to generate from water users through mechanisms such as irrigation service fees. Government subsidies to the irrigation agency for specified purposes are compatible with this financial autonomy, but need to be based on clearly defined criteria which make the amount of these funds largely independent of the amounts which the agency generates internally from water users and from secondary income.

5-02 Irrigation agencies operating within the context of financial autonomy should be responsible, through a combination of direct user charges and supplemental income, for the full cost of normal O&M plus a small but clearly identified portion of the capital cost. Responsibility for O&M costs is desirable because it is likely to enhance the performance of irrigation systems through more adequate funding and through better management associated with greater accountability to the water users. Responsibility for a small portion of the capital cost is desirable because it is likely to lead to better investment decisions. Furthermore, if there is provision for the involvement of the potential water users in the planning and decision-making process prior to the construction of the project, then responsibility for a portion of the capital costs may also lead to better irrigation performance due to the water users' perception that they, rather than a government agency, are the owners of the irrigation facilities.

5-03 If government irrigation agencies do not operate within the context of financial autonomy, the amount of funds collected from water users does not affect irrigation performance. In such a context, no general statement can be made about the optimal level of funds to be collected, which will depend on frequently conflicting considerations regarding the government's fiscal position and the distribution of income among groups in the nation.

5-04 To enhance irrigation investment decisions, ways should be sought, both at national and international levels, to create greater financial linkages between the investment decision process and the financial status of the agencies making these decisions. Giving a financially autonomous irrigation agency responsibility for repayment of a portion of the capital cost of irrigation is one step in this direction.

5-05 Within a context of financial autonomy, the mechanism of irrigation service fees levied on a per ha basis -- which is the principal direct financing mechanism currently in use in the study countries -- is a

reasonably satisfactory approach for obtaining resources from water users. Efforts to make water pricing to individual farmers the primary financing mechanism would be inappropriate, due both to the widespread absence of the pre-conditions necessary for its implementation, and to the likelihood that the additional costs necessary for implementation would exceed the incremental benefits.

5-06 Although true water pricing is generally not feasible in gravity systems serving large numbers of small farmers whose principal crop is rice, it may be possible in some countries to experiment with water pricing in a few selected small pump projects. A combination of a water price, reflecting the marginal cost of pumping, and a per ha irrigation service fee reflecting other costs that vary less directly with water use might be considered.

5-07 Experimentation with financing irrigation services through water wholesaling, possibly also in combination with irrigation service fees, may be feasible in a few selected gravity irrigation projects in some countries. This would require delivery of water by an irrigation agency to the head of a lateral or tertiary canal at the request of a water users' organization. Such an approach would obtain some of the benefits of water pricing without incurring unreasonable physical, administrative and financial burdens. It would also likely encourage more efficient operation of the irrigation facilities, as it would place more pressure on the irrigation agency to make deliveries at the specified points in accordance with agreements made with the water users' organizations. The existence of water users' organizations with O&M responsibilities at the lateral or tertiary level in some Philippine and Indonesian systems (and perhaps also in some land consolidation areas in Thai systems) is an encouraging prospect for such an approach; however, in any given situation, careful consideration of social and institutional factors must be given in developing experimental approaches.

REFERENCES

ADB. 1985a. Central Java Groundwater Development Study. Prepared by ELC Electroconsult Engineering in association with NIACONSULT, Inc. September.

ADB. 1985b. "Technical Assistance for a Regional Study on Irrigation Service Fees." May.

ADB. 1985c. "Key Indicators of Developing Member Countries of ADB." Vol. 16. Economics Office. Manila: Asian Development Bank, April.

ADB. 1982. "Annex N: Farm Budget Analysis." Extract from "Second Command Area Development Project." Manila: ADB.

ADB. 1981. "A Study of IPEDA (Indonesia's land Tax)." Paper by Hi Young Kim, Country Department. Manila: April.

Anonymous. 1985. "Rice: New Policies." Bangkok Bank Monthly Review. February, pp. 89-90.

Bell, C.L.G. and P.B.R. Hazell. 1980. "Measuring the Indirect Effects of an Agricultural Investment Project on Its Surrounding Region." American Journal of Agricultural Economics, Vol. 62, No. 1, February, pp. 75-86.

Bird, Richard M. 1976. Charging for Public Services: A New Look at an Old Idea. Canadian Tax Papers No. 59. Toronto: Canadian Tax Foundation.

Booth, Anne. 1974. "IPEDA--Indonesia's Land Tax." Bulletin of Indonesian Economic Studies. Vol. 10, No. 1, March, pp. 55-81.

Bottrall, Anthony. 1981. Financing Irrigation: Central-Local Financial Relations Review for the Government of Indonesia. A report to H.E. the Minister of Finance, Government of Indonesia. Sectoral Study No. 3 of the Central-Local Financial Relation Review for the Government of Indonesia. Birmingham, U.K.: Development Administration Group, Institute of Local Government Studies, University of Birmingham, September, 1981.

Cabanilla, Liborio S. 1985. "Study of Operation and Maintenance Problems in Irrigation: The Philippine Case." (Appendix to Easter, K. William, "Recurring Cost of Irrigation in Asia: Operation and Maintenance (O&M).) Los Banos: Department of Economics, University of the Philippines at Los Banos.

Carruthers, Ian and Colin Clark. 1981. The Economics of Irrigation. Liverpool: Liverpool University Press, Chapter 7: "Charges for Water," pp. 184-200.

Ciriacy-Wantrup, S.V. 1954. "Cost Allocation in Relation to Western Water Policies," Journal of Farm Economics, Vol. 36, No. 1 (February 1954), pp 108-129.

Coward, E. Walter, Jr. and Norman Uphoff. 1985. "O&M Costs in Irrigation: Reappraising Government and Farmer Responsibilities and Rights." Paper prepared for the Regional Conference for Agricultural and Rural Development Officers held at the International Rice Research Institute, Manila, Philippines, April 22-26, 1985.

DEVRES, INC. 1985. Irrigation Pricing and Management: Annex 5: 'Indonesia'. A study report prepared by Ian D. Carruthers et al. and submitted to USAID, Office of Policy Development and Program Review, Bureau of Program and Policy Coordination, Contract No. OTR-0091-C-00-4466-00, Washington D.C., July 15. (Draft)

DEVRES, Inc. 1985. "Preliminary Report on Irrigation Pricing and Management." Report prepared by Ian D. Carruthers et al. and submitted to the U.S. Agency for International Development, Contract No. OTR-0091-C-00-4466-00. Washington, D.C.: February.

Doppler, Werner. 1977. "Towards a General Guideline of Irrigation Water Charging Policy." Agricultural Administration, Vol. 4, pp. 121-29.

Easter, K. William. 1985. "Recurring Cost of Irrigation in Asia: Operation and Maintenance (O & M)." Final Report for the U.S. Agency for International Development, Water Management Synthesis II, Contract No. CID/AID-DAN-4127-C-00-2086-00. Honolulu, Hawaii: East-West Center, July.

Easter, K. William. 1980. "Capturing the Economic Surplus Created by Irrigation." Staff Paper P80-14, Department of Agricultural and Applied Economics, University of Minnesota, St. Paul, Minnesota: July.

FAO. 1982. "Organization, Operation and Maintenance of Irrigation Schemes." FAO Irrigation and Drainage Paper No. 40, by Sagardoy, J.A., A. Bottrall, and G.O. Uittenbogaard. Rome: Food and Agriculture Organization of the United Nations.

FAO. European Commission on Agriculture. Third Session of the Working Party on Water Resources and Irrigation. 1968. "Water Charges for Irrigation in Member Countries: A Survey of Methods and Principles." Report of the Third Session held in Brussels, Belgium, 27 May -1 June 1968, prepared by E. Dlayahu, Israel Water Commission. Rome: ECA:WR/68/3(7), 1968.

Feldstein, Martin S. 1972. "Equity and Efficiency in Public Sector Pricing: The Optimal Two-Part Tariff." Quarterly Journal of Economics, Vol. LXXXVI, No. 2, May, pp. 175-87.

Gadjah Mada University. 1982. Executive Summary: Study of Regional Capability to Finance the O&M Costs for Irrigation Systems in the PROSIDA Projects in the Pemali-Comal Area, Central Java and in the Bantimurung and Lanrae Project Areas, South Sulawesi. Jakarta: Directorate General of Water Resources Development, Ministry of Public Works, May.

Gaffney, Mason. 1969. "Economic Aspects of Water Resource Policy." American Journal of Economics and Sociology, Vol. 28, No. 2, April, pp. 131-144.

Gold, Ronald B. and Edward Foster. 1972. "Measuring Equity in the Taxation of Agricultural Land: A Case Study of Nepal." Land Economics Vol. 48, No. 3, August, pp. 277-280.

Howell, John. (Ed.) 1985. Recurrent Costs and Agricultural Development. London: Overseas Development Institute.

India. National Council of Applied Economic Research, New Delhi. 1959. Criteria for Fixation of Water Rates and Selection of Irrigation Projects. New Delhi: A ia Publishing House.

Kim, Bong-Koo. 1982. "Evaluation Study on Medium Scale Irrigation Project under IBRD Loan." Evaluation report. Seoul: Korea Rural Economics Institute, December.

Korea. Agricultural Development Corporation. 1984. Yearbook of Land and Water Development Statistics 1984. Anyang, Kyonggi-Do, Korea.

Korea. Ministry of Agriculture and Fisheries. 1985. Reports on the Results of Farm Household Economy Survey, Production Cost Survey of Agricultural Products, Food Grain Consumption Survey. Seoul, Korea: May.

Korea. National Bureau of Statistics. Economic Planning Board. 1985. Major Statistics of Korean Economy 1985. Seoul, Korea: Government Publication Center.

Korea. National Bureau of Statistics. Economic Planning Board. 1984. Korea Statistical Yearbook 1984. Seoul, Korea: Government Publication Center, December.

Levine, Gilbert and Henry C. Hart. 1981. "Mobilizing Local Resources for Irrigation." An interpretative summary of a seminar held in Colombo, Sri Lanka, August 11-15, 1980. Research and Training Network Report No. 22. New York: Agricultural Development Council, June.

Martin, Edward D. 1986. Resource Mobilization, Water Allocation, and Farmer Organization in Hill Irrigation Systems in Nepal. Unpublished Ph.D. dissertation. Ithaca, New York: Cornell University.

Marts, M.E. 1956. "Use of Indirect Benefit Analysis in Establishing Repayment Responsibility for Irrigation Projects." Economic Geography, Vol. 32, No. 2, April, pp. 132-138.

Milliman, Jerome W. 1972. "Beneficiary Charges--Toward a Unified Theory." In Muskin, Selma (ed.), Public Prices for Public Products. Washington: The Urban Institute, pp. 27-51.

Muskin, Selma J. (ed.). 1972. Public Prices for Public Products. Washington: The Urban Institute.

Neghassi, Habte M. and James A. Seagraves. 1978. "Efficiency in the Use of Water for Irrigation: The Role of Prices and Regulations." Natural Resources Forum, Vol. 3, pp. 53-72.

Nepal. WEC. 1983. "Consultancy Study on Strengthening Supra-Project Institutional Framework and Organizational Structure and Management Processes of Large-Scale Intensive Terai Irrigation Projects." Report 3/2/201283/1/1. Kathmandu: Water and Energy Commission, December.

No-Frills Development Consultants. 1984. "Study of Operation and Maintenance Problems in Nepalese Irrigation Projects. Prepared by Tej Bahadur Shrestha, Shyam Kajee Shakya, and Mahesh Man Shrestha for USAID/NEPAL. (Appendix to Easter, K. William, "Recurring Cost of Irrigation in Asia: Operation and Maintenance (O & M).") Kathmandu, December.

Pasandaran, Effendi. 1985. "Operation and Maintenance of Irrigation Systems in Indonesia." Paper submitted to the International Irrigation Management Institute, Digana, Sri Lanka, October.

Pawar, Jagannathrao R. 1985. "Recurrent Cost Study of Operation and Maintenance of Irrigation Systems in Maharashtra." (Appendix to Easter, K. William, "Recurring Cost of Irrigation in Asia: Operation and Maintenance (O&M)".) Maharashtra, India: Mahatma Phule Agricultural University, March.

Philippines. National Irrigation Administration. 1984a. "The Agricultural Input Loan: Irrigation Study." Manila: Corporate Planning Staff, November.

Philippines. National Irrigation Administration. 1984b. "NIA-audited Income-Expense Statements, 1979-83." In NIA Annual Report, 1984. Manila.

Pradhan, Prachanda. 1985. "Irrigation Service Fee Study: Nepal." Paper submitted to the International Irrigation Management Institute, Digana, Sri Lanka. Lalitpur, Nepal: Development Research Group Pvt. Ltd.

Rao, P.K. 1984. "Comments on Cost Recovery and Irrigation Water Pricing." ODI Irrigation Management Network Paper 10f. London: Overseas Development Institute, November.

Renshaw, Edward F. 1960. "Model of the Land Market--A Note." Journal of Farm Economics, Vol. XLII, No. 1, pp. 174-79.

Seagraves, J.A. and K. William Easter. 1985. "Pricing for Irrigation Water." Paper prepared for the Regional Conference for Agricultural and Rural Development Officers held at the International Rice Research Institute, Manila, Philippines, April 22-26.

Shim, Young Kun. 1985. "Development of Farmland Improvement Association in Korea." Research report submitted to the International Irrigation Management Institute, Digana, Sri Lanka, December.

Siamwalla, A. 1975. "A History of Rice Policies in Thailand." Food Research Institute Studies, Vol. 14, No. 3.

Taylor, Donald C. 1979. "Financing Irrigation Services in the Pekalen Sampean Irrigation Project, East Java, Indonesia." In Donald C. Taylor and Thomas H. Wickham (ed.), Irrigation Policy and the Management of Irrigation Systems in Southeast Asia. Bangkok: The Agricultural Development Council, pp. 111-122.

Tempora, E.V., R.A. Caddarao, and V.S. Monge. 1984. "Costs and Returns of Producing Palay in the Philippines, 1983." Economic Research Report No. 8, Bureau of Agricultural Economics, Ministry of Agriculture and Food. Manila: October.

Thailand. Center for Agricultural Statistics. 1984. "Agricultural Statistics of Thailand Crop Year 1983/84." Agricultural Statistics No. 213. Bangkok: Ministry of Agriculture and Cooperatives, Office of Agricultural Economics.

Thailand. Royal Irrigation Department. 1984. "Statement of Cost Recovery Policy for Irrigation Projects in Thailand." Bangkok: (mimeo), February.

Tiffen, Mary (Ed.). 1985. "Cost Recovery and Water Tariffs: A Discussion." Irrigation Management Network Paper 11e. London: Overseas Development Institute, May.

Torres, R.D. 1973. "Pricing Irrigation Water." In Water Management in Philippine Irrigation Systems: Research and Operations. Los Banos: International Rice Research Institute, pp. 183-194.

United Nations. 1981. Proceedings of the Expert Group Meeting on Water Pricing Held at Bangkok, May 13-19, 1980. Water Resources Series No. 55. New York.

United Nations. 1980. Efficiency and Distributional Equity in the Use and Treatment of Water: Guidelines for Pricing and Regulations. Natural Resources/Water Series No. 8. ST/ESA/103. New York.

U.S. Agency for International Development. Bureau for Asia. 1985. "USAID Policy Papers - Recurrent Costs." Discussion paper prepared for the Regional Conference for Agricultural and Rural Development Officers held at the International Rice Research Institute, Manila, Philippines, April 22-26, 1985.

U.S. General Accounting Office. 1983. Irrigation Assistance to Developing Countries Should Require Stronger Commitments to Operation and Maintenance. Report to the Administrator of Agency for International Development. GAO/NSIAD-83-31. Washington: August.

Wade, Robert. 1982. Irrigation and Agricultural Politics in South Korea. Boulder: Westview Press.

Westgate, Robert A. 1985a. "Appendix A: Executive Summaries of Four Case Studies on the Recurring Cost of Irrigation: Operation and Maintenance (O&M)." Appendix to Easter, K. William, "Recurring Cost of Irrigation in Asia: Operation and Maintenance (O & M)." Final Report for the U.S. Agency for International Development, Water Management Synthesis II, Contract No. CID/AID-DAN-4127-C-00-2086-00. Honolulu, Hawaii: East-West Center, July.

Westgate, Robert A. 1985b. "Appendix B: Review of Literature -- The Importance of O & M." Appendix to Easter, K. William, "Recurring Cost of Irrigation in Asia: Operation and Maintenance (O & M)." Final Report for the U.S. Agency for International Development, Water Management Synthesis II, Contract No. CID/AID-DAN-4127-C-00-2086-00. Honolulu, Hawaii: East-West Center, July.

World Bank. 1985a. Thailand: Pricing and Marketing Policy for Intensification of Rice Agriculture. A World Bank Country Study. Washington, D.C.

World Bank. 1985b. "A Review of Conditionality in World Bank Projects: Cost Recovery in Irrigation Projects." Paper prepared by the Operations Evaluation Department. Washington: May (draft).

World Bank. 1984a. "Republic of Korea: Agricultural Sector Survey." Report No. 4709-KO. Washington: April 23.

World Bank. 1984b. "Indonesia Cost Recovery: Issues and Options in the Irrigation Sector." Draft report No. G-Cost/AT-533. Washington: April 19, 1984.

World Bank. 1984c. "Financing Operation and Maintenance in Irrigation." Agriculture and Rural Development Policy Note No. 4, Economics and Policy Division, AGR. Washington: March.

World Bank. 1983. "Irrigation Water Charges and Cost Recovery Policies: A Policy Perspective." AGREP Division Working Paper No. 84, prepared by Alfredo Sfeir-Younis. Washington: October.

World Bank. 1981a. "Comparative Study of the Management and Organization of Irrigation Projects." World Bank Staff Working Paper No. 458 by Anthony F. Bottrall. Washington: May.

World Bank. 1981b. "Water Management in Bank-Supported Irrigation Project Systems: An Analysis of Past Experience." Report No. 3421, Operations Evaluation Department. Washington: April.

World Bank. 1980. Thailand: Case Study of Agricultural Input and Output Pricing. Staff Working Paper No. 385, prepared by Trent Bertrand (consultant), Agriculture and Rural Development Department. Washington, D.C.

World Bank. 1976. "Irrigation Water Charges, Benefit Taxes and Cost Recovery Policies." Central Projects Note No. 2.10 by Warren C. Baum. Washington: June.

World Bank. 1975a. "A Policy Framework for Irrigation Water Charges." Staff Working Paper No. 218 prepared by Paul Duane, Economics and Resources Division, Agriculture and Rural Development Department. Washington: July.

World Bank. 1975b. "Cost Recovery Policies for Public Sector Projects." Staff Working Paper No. 206, prepared by Anandarup Ray,. Projects Advisory staff. Washington: July.

Table No.	Title	Page No.
A1.15	Nepal: Estimates of Incremental Net Income from Irrigation	15
A1.16	Nepal: Irrigation Service Fees Assessed and Collected	16
A1.17	Nepal: Indicative Costs and Returns to Irrigated Rice Production	17
A1.18	Nepal: Indicative Costs and Returns to Irrigated Wheat Production	17
A1.19	Nepal: Indicative Costs and Returns to Irrigated Agriculture	18
A1.20	Nepal: Hypothetical Costs and Returns to Low Yielding Irrigated Agriculture, Assuming Changes in Policies Regarding Irrigation Service Fees	19
A1.21	Nepal: Hypothetical Costs and Returns to High Yielding Irrigated Agriculture, Assuming Changes in Policies Regarding Irrigation Service Fees	19
A1.22	Philippines: Irrigation Service Fee Rates (Cavans per Hectare), 1985	20
A1.23	Philippines: Real Value of Irrigation Service Fee Rates in National Irrigation Systems by Type of System and Season, 1975-1984	21
A1.24	Philippines: Total Expenses Incurred in the Collection of Irrigation Fees in National Systems, 1982-1985	22
A1.25	Philippines: Total Irrigation Service Fee Collections and O&M Fund Releases: 1979-1984	23
A1.26	Philippines: Irrigation Fee Collectibles and Actual Collections in All National Irrigation Systems	24
A1.27	Philippines: Estimated Collection Efficiencies from Current Irrigation Service Fee Charges	25
A1.28	Philippines: Operation and Maintenance Costs of National Irrigation Systems, 1979-1984	26
A1.29	Philippines: Income of the National Irrigation Administration by Source 1983 and 1984	27
A1.30	Philippines: Indicative Costs and Returns to Irrigated Rice Production	28

Annex 1

SUPPORTING TABLES

Table of Contents

Table No.	Title	Page No.
A1.1	Indonesia: Operation and Maintenance Allocation by Central Government for Public Works Irrigation Systems	1
A1.2	Indonesia: Farmers' Payments to Village Irrigation Officials - Some Examples.	2
A1.3	Indonesia: Net Incremental Benefit by Farm Size and Type of Irrigation System	3
A1.4	Indonesia: Indicative Costs and Returns to Irrigated Rice Production in Java, 1985	4
A1.5	Indonesia: Hypothetical Costs & Returns to Irrigated Rice Production, 1983 Assuming Changes in Policies Regarding Water Charges	5
A1.6	Korea: Domestic and International Rice Prices	6
A1.7	Korea: Estimates of Average Irrigation Service Fees and Average Increases in Gross Income by Province, 1983	7
A1.8	Korea: Average O&M Costs and Irrigation Service Fees, per Ha of Assessed Area, by Size of Project and for Selected FLIAs, 1983	8
A1.9	Korea: Source of Revenues, by Size of Project and for Selected FLIAs, 1983	9
A1.10	Korea: Hypothetical Annualized Cost of Irrigation Services, Assuming Net Construction Costs of 5 Million won per Ha	10
A1.11	Korea: Distribution of Hypothetical Annualized Total Cost of Irrigation Services, by Size of Capital Cost	11
A1.12	Korea: Approximate Average Costs and Returns to Irrigated Rice Production, 1983	12
A1.13	Korea: Hypothetical Average Costs and Returns to Irrigated Rice Production, 1983, Assuming Changes in Policies Regarding Rice Prices and Water Charges	13
A1.14	Nepal: O&M Costs of Large and Medium Scale Gravity Irrigation Projects	14

Table No.	Title	Page No.
A1.31	Philippines: Hypothetical Costs and Returns to Irrigated Rice production, 1983, Assuming Changes in Policies Regarding Water Charges	29
A1.32	Thailand: Budget Distribution for the Royal Irrigation Department, 1981-1984	30
A1.33	Thailand: Export Taxes and Central Government Revenue	31
A1.34	Thailand: Estimated Government Revenues from Rice Premium and Export Taxes Attributable to Irrigation in Selected Years	32
A1.35	Thailand: Indicative Costs and Returns to Irrigated Rice Production	33
A1.36	Thailand: Hypothetical Costs and Returns to Irrigated Rice Production, Assuming Changes in Policies Regarding Irrigation Service Fees	33

Table A1.1. Indonesia: Operation and Maintenance Allocation by Central Government For Public Works Irrigation Systems

Year	Eligible area (ha)	Proposed Budget		Approved Budget		
		Total Current (000 Rp)	Per ha Current (Rp)	Total Current (000 Rp)	Per ha Current Rp	Per ha 1984 Rp [a]
1974/75	3,657,175	5,851,480	1,600	5,851,479.2	1,600	6,638
1975/76	3,724,286	10,977,150	2,844	5,736,000	1,540	5,680
1976/77	3,249,482	9,033,900	2,671	6,273,850	1,931	6,224
1977/78	3,771,859	14,750.474	3,719	7,920,984	2,100	5,988
1978/79	4,346,768	15,076,414	3,493	9,967,036	2,293	5,893
1979/80	4,474,706	21,874,625	4,888	13,267,000	2,965	5,750
1980/81	4,541,186	23,000,000	5,065	19,771,000	4,354	6,539
1981/82	4,577,526	36,211,000 [b]	7,911	26,009,000	5,682	7,747
1982/83	4,506,809	47,767,000 [c]	10,598	31,235,000	6,920	8,741
1983/84	4,668,836	59,524,131 [d]	12,749	32,895,000	7,093	7,817
1984/85	3,906,706			30,732,000	7,866	7,866
	985,751			11,348,000 [e]	11,512	11,512
1985/86	3,949,324			32,425,308	8,210	
	1,008,558			11,901,500 [e]	11,801	

[a] Current Rp adjusted by the Implicit GDP deflator (ADB, 1985).

[b] Three earlier alternatives - "high", "medium", and "low" - had been presented to the government planning agency (BAPPENAS) and rejected. These were:

High	Rp 43,735,000,000;	9,603 Rp/ha.
Medium	Rp 40,340,000,000;	8,858 Rp/ha.
Low	Rp 38,211,000,000:	7,951 Rp/ha.

The large increase in proposed O&M expenditure in 1981/82 reflects an attempt by Directorate of Irrigation to persuade GOI to increase the O&M subsidy.

[c] This is the "low" alternative presented to Bappenas. The high alternative was Rp 50,488,000,000.

[d] This is the "low" alternative presented to Bappenas. The high alternative was Rp 63,626,891,000.

[e] Starting 1984/85, additional funds for O&M were made available from the APBN of the DGWRD.

Source: Directorate of Irrigation I, DGWRD, August 1985.

Table A1.2. Indonesia: Farmers' Payments to Village Irrigation Officials--Some Examples

Type of System and Location	Average Seasonal Rate (per ha)	Crop Seasons	Total Annual Payments (Rp/ha) (@ Rp 100/kg rice)
Run-of-the-River			
1. Bali:			
a. DPU system	20 kg rice	2 x rice	4,000
b. Communal system	10 kg rice	2 x rice	2,000[a]
2. Pekaten Sampean, E. Java - DPU system	30-50 kg rice	2 x rice or 1 x rice plus 1 x upland crops	6,000-10,000
3. Sragen/Solo region, C. Java - Dharma Tirta communal system	115 kg rice	3 x rice	34,500
4. Lake Toba region, N. Sumatra-communal system	20 kg rice	2 x rice	4,000
5. Sidrap, S. Sulawesi, DPU system	50 kg rice	2 x rice	1[illegible],000
Pumps			
6. Kediri-Nganjuk, E. Java, DPU Tubewells	hourly charges for fuel consumption and operator (Rp. 250-600/ha)	2 x rice or 1 x rice plus 1 x upland crops	25,000-40,000
7. Sedrap, S. Sulawesi, communal low-lift pumps	100 kg rice	2 x rice	20,000

[a] Plus special contributions for major maintenance and repair when the need arises; may be up to Rp. 6,000/ha, but not every year.

Source: Anthony Bottrall, Financing Irrigation: Central-Local Financial Relation Review for the Government of Indonesia, 1981.

Table A1.3. Indonesia: Net Incremental Benefit by Farm Size and Type of Irrigation System
(Rp per Farm)

Study area	Ownership pattern	Farm size (ha)	Type of Irrigation System		
			Technical	Semi-Technical	Simple
Pemali-Comal	Owner-operator	less than .5	119,009	58,543	25,397
		.5 - 1	204,301	133,542	176,602
		1 - 1.5	439,875	625,426	160,074
		1.5 - 2	-	-	122,781
		over 2.0	-	-	190,737
	Share cropper	less than .5	45,554	57,307	42,895
		.5 - 1	66,369	-	2,849
Bantimurung Lanrae	Owner-operator	less than .5	53,098	64,650	-
		.5 - 1	162,498	54,270	-
		1 - 1.5	304,543	130,497	-
		1.5 - 2	-	188,068	-
	Share cropper	less than .5	-	29,867	-
		.5 - 1	-	70,852	-
		1 - 1.5	-	76,824	-
		1.5 - 2	-	225,632	-

Source: Gadjah Mada University, Executive Summary: Study of Regional Capability to Finance the O&M Costs for Irrigation Systems in the Prosida Projects in the Pemali-Comal Area, Central Java and in the Bantimurung and Lanrae Project Areas, South Sulawesi, May 1982.

Table A1.4. Indonesia: Indicative Costs and Returns to Irrigated Rice Production in Java, 1985

Item	Amount (000 Rp/ha)	Kg Paddy per ha	Percent of Value of total production
1. Gross Receipts	839.5[a]	7,300[b]	100.0
2. Charges Related to Water			
a. Tertiary O&M (cash and kind)[c]	19.0	165	2.3
b. Tertiary O&M (labor)[c]	(2.0)	(17)	(0.2)
c. IPEDA[d]	8.0	70	1.0
3. Other purchased inputs excluding labor[b]	120.0	1,043	14.3
4. Hired labor[b]	247.4	2,151	29.5
5. Returns to Family Resources (if family owns all land farmed)	445.1	3,871	53.0

[a] Based on a price of Rp 115/kg (from ADB 1985a, Central Java Groundwater Development Study).

[b] Based on two crops per year, with a yield of 4,100 kg/ha for the wet season, and 3,200 kg/ha for the dry season (from ADB 1985a, Central Java Groundwater Development Study, p.IV-21).

[c] Based on data in Table A3.13 (Annex 3), assuming only 2 crops (wet season and first dry season).

[d] Assumed to be Rp 8,000/ha, as also assumed in Table A3.29 (Annex 3).

65

Table A1.6. Korea: Domestic and International Rice Prices
(thousand won per ton polished rice)

Rice Year[a]	Government Purchase Price (1)	Import Cost CIF (2)	Import Cost Adjusted to Farm Gate[b] (3)	Domestic/International Price Ratio (1 ÷ 3)
1975	197	204	238	.83
1976	244	127	163	1.50
1977	290	-	-	-
1978	328	-	-	-
1979	375	158	205	1.83
1980	458	283	355	1.29
1981	572	355	442	1.29
1982	652	267	359	1.82
1983	700	241	332	2.11
1984	700	-	-	-
1985	722	-	-	-

[a] Begins Nov. 1 of previous calendar year, and continue through Oct. 31 of the current calendar year.

[b] Based on a 1981 net cost for transport, handling and storage of 87,000 won per ton as reported in Kim (1982), "Evaluation Study on Medium Scale Irrigation Project under IBRD Loan" p.136, adjusted for price level changes using the average producers' wholesale price index as reported in Korea. National Bureau of Statistics. Economic Planning Board. 1984. Korea Statistical Yearbook, p.403.

Source: Col 1 and 2: World Bank. 1984a. "Republic of Korea Agricultural Sector Survey", Table A9, and Korea. National Bureau of Statistics. Economic Planning Board. Major Statistics of Korean Economy 1985, pp 76 and 301.

Table A1.5. Indonesia: Hypothetical Costs and Returns to Irrigated Rice Production, 1983, Assuming Changes in Policies Regarding Water Charges
(kg paddy/ha)

Item	Present Policy[a]	Present Policy modified to Set Irrigation Service Fees Equal to: All O&M Costs	All O&M Costs plus Full Recovery of Capital Costs Assuming: High Capital Cost	Moderate Capital Cost	Low Capital Cost
1. Gross Receipts	7,300	7,300	7,300	7,300	7,300
2. Charges Related to Water					
a. Tertiary O&M: cash & kind	165	165	165	165	165
b. Tertiary O&M: labor	(17)	(17)	(17)	(17)	(17)
c. Main system O&M	0	70	70	70	70
d. IPEDA	70	70	70	70	70
e. Capital cost[b]	0	0	3,434	1,531	774
3. Other purchased inputs excluding labor	1,043	1,043	1,043	1,043	1,043
4. Hired labor	2,151	2,151	2,151	2,151	2,151
5. Returns to family resources (if family owns all land farmed)	3,871	3,801	367	2,270	3,027

[a] Figures from Table A1.4.

[b] Calculated from Table A3.29 (Annex 3).

Table A1.7. Korea: Estimates of Average Irrigation Service Fees and Average Increases in Gross Income by Province, 1983

Province	Average Increase in Gross Income (000 won/ha)	Average Irrigation Service Fee (000 won/ha)	Irrigation Service Fee as % of increase in gross income
Gyeonggi	679	176	25.9
Gangweon	511	160	31.3
Chung Bug	910	169	18.6
Chung Nam	175	138	78.9
Jeon Bug	315	142	45.1
Jeon Nam	259	141	54.4
Gyeong Bug	728	158	21.7
Gyeong Nam	147	152	103.4
All Korea	504	156	31.0

Source: Col 1 : Calculated from Annex 4, Table A4.19.

Col 2 : Korea, Agricultural Development Corporation. 1984. Yearbook of Land and Water Development Statistics 1984, p.300.

Table A1.8. Korea: Average O&M Costs and Irrigation Service Fees, Per Ha of Assessed Area, by Size of Project and for Selected FLIAs, 1983

Description	O&M Cost (Won/ha) (1)	Irrigation Service Fees (Won/ha) (2)	Irrigation Service Fees kg paddy per ha (3)	Irrigation Service Fees as % of O&M Cost (1 ÷ 2) (4)
All 103 FLIAs	168,200	156,300	310	92.9
Medium scale projects (50-5,000 ha) (72 FLIAs)	169,800	156,100	310	91.9
Large scale projects (5,000-20,000 ha) (28 FLIAs)	172,700	158,600	315	91.8
Very large projects (over 20,000 ha) (3 FLIAs)	156,500	137,800	273	88.1
Ki Ho FLIA	160,100	148,700	295	92.9
Pa Jo FLIA	161,300	188,600	374	116.9
Pyong Taek FLIA	188,500	201,700	400	107.0
So San FLIA	162,700	155,300	308	95.5

Source: Calculated from Korea, Agricultural Development Corporation. 1984. Yearbook of Land and Water Development Statistics 1984 Tables 11 and 12.

Table A1.9. Korea: Source of Revenues, by Size of Project and for Selected FLIAs, 1983
(000 won per ha of assessed area)

Description	Irrigation Service Fees	Secondary Income	Total Revenue	Revenue from Irrigation Service Fees as % of Total
All 103 FLIAs	151,600	48,200	199,800	75.9
Medium scale projects (50-5,000 ha) (72 FLIAs)	155,800	56,100	211,900	73.5
Large scale projects (28 FLIAs)	158,100	42,700	200,800	78.7
Very large projects (over 20,000 ha) (3 FLIAs)	132,100	47,700	179,800	73.5
Ki Ho FLIA	148,100	65,400	213,500	69.4
Pajo FLIA	183,100	57,600	240,700	76.1
Pyong Taek FLIA	194,500	41,900	236,400	82.3
So San FLIA	153,600	62,400	216,000	71.1

Source: Korea, Agricultural Development Corporation. 1984. Yearbook of Land and Water Development Statistics 1984 Table 12.

Table A1.10. Korea: Hypothetical Annualized Cost of Irrigation Services, Assuming Net Construction Costs of 5 Million Won Per Ha
(won/ha)

Item	Total Cost	Cost to FLIA
Net construction cost	5,000,000	1,500,000 [a]
Design (3% of net)	150,000	0
Supervision of construction (10% of net)	500,000	0
Sub total	5,650,000	1,500,000
Interest during construction [b]	1,725,000	0
Total cost at end of construction	7,375,000	1,500,000
Annualized value	743,800 [c]	52,000 [d]
Annual O&M Costs	185,000	170,000
Total Annualized Cost	928,800	222,000

[a] Assumed to be 30 percent of total.

[b] Assuming a 5 year construction period, average investment equal to 50 percent of the sub-total; at 10% interest.

[c] Assuming a 50 year life, at 10% interest.

[d] Annual amount whose present value is equivalent, at 10% interest, to the present value of the required payments of 88,100 per year for 30 years, following a 5 year grace period. (Annual payments of 88,100 for years 6-35 are based on loan for 1,500,000 plus 262,500 interest over 5 year grace period amortized over 30 years at 3.5% interest).

Table A1.11. Korea: Distribution of Hypothetical Annualized Total Cost of Irrigation Services, by Size of Capital Cost

Size of Capital Cost (000 won/ha)	Hypothetical Annualized Total Cost of Irrigation Service (won/ha)[a]			Percent of Costs Paid by			
				FLIAs		Farmers through Irrigation Service Fees[c]	
	Total	Paid by FLIAs	Paid by Farmers by Irrigation Service Fees[b]	O&M	Capital	O&M	Capital
3,000	631,300	201,200	150,900	100.0	3.6	80.7	0.0
5,000	928,800	222,000	166,500	100.0	5.0	89.0	0.0
7,000	1,043,520	242,800	182,100	100.0	6.7	97.4	0.0
9,000	1,336,840	263,600	197,700	100.0	6.8	100.0	1.1

[a] Calculation of total costs and costs paid by FLIAs based on Table A1.10.

[b] Assumes irrigation service fees represent 75% of total revenues of the FLIAs.

[c] Partioning between O&M and capital is based on the hypothetical assumption that funds from irrigation service fees are credited to capital costs only after all O&M costs are covered by these fees. In actual fact, an individual farmer's irrigation service fee has an O&M component and a capital cost component, even when the O&M component is less than the full cost of O&M. In 1983, the average capital cost component was 23 percent of the average irrigation service fee.

72

Table A1.12. Korea: Approximate Average Costs and Returns to Irrigated Rice Production, 1983

Item	Amount 000 won/ha	kg paddy/ha	Percent of value of total production
1. Gross receipts [a]	3,276.0	6,500	100.0
2. Water Charges [b]			
a. for O&M	121.0	240	3.7
b. for capital repayment	35.3	70	1.1
c. in kind labor contribution	(11.4)[c]	(23)[c]	(0.4)[c]
3. Other Purchased Current Inputs, excluding labor [d]	355.7	706	10.9
4. Hired Labor [e]	179.4	356	5.5
5. Returns to family-owned resources (if family owns all land farmed)	2,584.6	5,128	78.9

[a] Based on average irrigated yield of 6.5 tons paddy (4.69 tons polished rice) per ha. (Table A4.19) and the 1983 government price for Grade B paddy of 504 won/kg.

[b] Separation of O&M from capital repayment in the average irrigation service fee based on ADC data. In-kind labor contribution estimated at 2 man-days of labor from discussions with officials in selected FLIAs. Average wage rate of 5,700 won/day on 1980 data (World Bank 1984a, "Republic of Korea: Agricultural Sector Survey", pg 139), adjusted to 1983 using the Consumer Price Index (Korea, National Bureau of Statistics. Economic Planning Board, 1985, Major Statistics of Korean Economy 1985, p 203).

[c] Non-cash item.

[d] Calculated from Korea, MAF 1985, Reports on the Results of Farm Household Economy Survey, Production Cost Survey of Agricultural products, Food Grain Consumption Survey, pp 296-299.

[e] Korea, MAF 1985, p 299.

Table A1.13. Korea: Hypothetical Average Costs and Returns to Irrigated Rice Production, 1983, Assuming Changes in Policies Regarding Rice Prices and Water Charges (kg paddy/ha)

Item	Assumed Policy Conditions				
	World Rice Prices[a] with Actual Water Charges	Actual Rice Prices with Water Charge raised to 100% Cost Recovery, assuming:		World Rice Prices[a] with Water Charges raised to 100% Cost Recovery assuming:	
		moderate investment cost[b]	high investment cost[c]	moderate investment cost[b]	high investment cost[c]
1. Gross receipts	6,500	6,500	6,500	6,500	6,500
2. Water charges					
a. for O&M	506	334[d]	334[d]	704[d]	704[d]
b. for capital repayment	148	1,476	2,285	3,112	4,819
c. in kind labor contributions	(48)	(23)	(23)	(48)	(48)
3. Other purchased current inputs, excluding labor	1,488	706	706	1,488	1,488
4. Hired labor	751	356	356	751	751
5. Returns to family-owned resources (if family owns all land farmed)	3,607	3,628	2,819	445	-1,262

[a] Korean paddy price assumed to drop to 239 won/kg (332 won/kg polished rice) with no restriction on imports (based on Table A1.6).

[b] Assumed to be 5,000,000 won per ha, which is equivalent to an annualized value of 743,800 won/ha (based on Table A1.10).

[c] Assumed to be 9,000,000 won per ha, which is equivalent to an annualized value of 1,151,840 won/ha (based on Table A1.11).

[d] Based on average actual cost of O&M of 168,200 won/ha (Table A1.8).

Table A1.14. Nepal: O&M Costs of Large and Medium Scale Gravity Irrigation Projects

Large Projects	Kankai	Susari-Morang	Kamala	Narayani
O&M Budget (NRs)	1,000,000	6,000,000	525,000	6,500,000
Net Command Area Irrigated (ha)	5,000	30,000	16,500	31,400
Cost per ha (NRs)	200	200	105	207
Amount Needed per hectare for proper O&M (NRs)	300	600	200	245
Total Budget Required for proper O&M (NRs)	1,500,000	18,000,000	3,300,000	7,693,000

Medium Projects	Manusmaru	Jhanj	Hardinath	Pothraiya
Average Cost (NRs)	483,580	455,215	243,112	431,489
Net Command Area Irrigated (ha)	5,800	2,900	2,000	2,000
Cost per ha (NRs)	83	157	122	216
Amount Needed per hectare for proper O&M (NRs)	175	300	250	300
Total Budget Required for proper O&M (NRs)	1,015,000	870,000	500,000	600,000

Source: No-Frills Development Consultants, 1984. "Study of Operation and Maintenance Problems in Nepalese Irrigation Projects".

Table A1.15. Nepal: Estimates of Incremental Net Income from Irrigation[a]

System		Chandra				Mohana			
Status		Current		Post CAD		Current		Post CAD	
With Irrigation	Area (Ha)	Net Returns per Ha	Net Returns	Net Returns per Ha	Net Returns	Net Returns per Ha	Net Returns	Net Returns per Ha	Net Returns
Rice	1.00	3,606[b]	3,606	6,269[c]	6,269	2,401[d]	2,401	3,881[e]	3,881
Wheat	0.66	3,119[f]	2,059	6,104[g]	4,029	2,549[h]	1,682	3,887[i]	2,565
Total	1,66		5,665		10,298		4,083		6,446
Without Irrigation									
Rice	1.00	2,117[j]	2,117	2,117[j]	2,117	1,255[k]	1,255	1,255[k]	1,255
Incremental Net Income/Ha			3,548		8,181		2,828		5,191

[a] NRs. - 1982 prices
[b] Yield 2.2 MT/Ha
[c] Yield 3.8 MT/Ha
[d] Yield 1.6 MT/Ha
[e] Yield 2.8 MT/Ha
[f] Yield 1.5 MT/Ha
[g] Yield 3.1 MT/Ha
[h] Yield 1.5 MT/Ha
[i] Yield 2.7 MT/Ha
[j] Yield 1.1 MT/Ha
[k] Yield 0.8 MT/Ha

Source: Calculated from ADB, 1982. "Annex N: Farm Budget Analysis", Second Command Area Development Project.

Table A1.16. Nepal: Irrigation Service Fees Assessed and Collected (NRs.)

System	Year	Assessments	Collections	Percentage Collected
Chitwan	80/81	245,928	9,342	4
	81/82	229,719	28,529	12
	82/83	227,456	118,179	52
Manusmara	80/81	149,669	2,174	1.5
	81/82	153,653	1,893	1.2
	82/83	173,712	792	0.5
Jhanj	80/81	250,000	50,479	20.2
	81/82	250,000	14,259	5.7
	82/83	250,000	67,864	27.1
	83/84	250,000	70,282	28.1
Hardinath	81/82	103,982	15,005	14.4
	82/83	83,586	10,520	12.6
	83/84	110,482	34,338	31.1
Narayani Surface	77/78	104,100	7,145	6.9
	78/79	318,300	5,156	1.6
	79/80	293,900	2,581	0.9
	80/81	659,700	122	0.02
	81/82	1,381,800	-	0
	82/83	1,771,800	102,433	5.8
	83/84	2,422,900	211,277	8.7
	84/85	NA	229,417	NA
Narayani Tubewell	77/78	46,000	41,777	90.8
	78/79	63,600	59,526	93.6
	79/80	18,500	15,878	85.8
	80/81	92,500	61,210	66.2
	81/82	79,200	57,140	72.1
	82/83	154,000	131,214	85.2
	83/84	173,200	96,500	55.7
	84/85	173,200	131,138	75.7

Sources: Nepal. WEC, 1983 (for Chitwan)
No-Frills Development Consultants, 1984 (for Manusmara, Jhanj, Hardinath)
Water Utilization and Water Collection Unit, NZIDP, 1985 (for Narayani Surface Irrigation)
Nippon Koi, 1984 (for Narayani Tubewell)

Table A1.17. Nepal: Indicative Costs and Returns to Irrigated Rice Production (per hectare)

	Low Yield		High Yield	
	NRs.	Kg Paddy	NRs.	Kg Paddy
1. Gross Production	4,858	2,200	8,390	3,800
2. Water Charge	100	45	100	45
3. Other purchased current inputs excluding labor	439	199	1,087	492
4. Hired labor	440	200	517	234
5. Returns to family resources (if family owns all land farmed)	3,879	1,756	6,686	3,029

Source: ADB, 1982. "Annex N: Farm Budget Analysis", Second Command Area Development Project.

Table A1.18. Nepal: Indicative Costs and Returns to Irrigated Wheat Production (per hectare)

	Low Yield		High Yield	
	NRs.	Kg Paddy	NRs.	Kg Paddy
1. Gross Production	4,208	1,906	8,415	3,811
2. Water Charges	100	45	100	45
3. Other purchased current inputs excluding labor	725	328	1,747	791
4. Hired labor	154	70	143	65
5. Returns to family resources (if family owns all land farmed)	3,229	1,463	6,425	2,910

Source: ADB, 1982. "Annex N: Farm Budget Analysis", Second Command Area Development Project, 1982.

Table A1.19. Nepal: Indicative Costs and Returns to Irrigated Agriculture (per hectare)[a]

	Low Yield		High Yield	
	NRs.	Kg Paddy	NRs.	Kg Paddy
1. Gross Production	7,635	3,458	13,944	6,315
2. Water Charge	166	75	166	75
3. Other purchased current inputs excluding labor	918	416	2,240	1,014
4. Hired labor	594	269	611	277
5. Returns to family resources (if family owns all land farmed)	5,957	2,698	10,927	4,949

[a] Assumes a rice crop on 1 ha and wheat on 0.66 ha.

Source: Tables A1.17 and A1.18.

Table A1.20. Nepal: Hypothetical Costs and Returns to Low Yielding Irrigated Agriculture, Assuming Changes in Policies Regarding Irrigation Service Fees (kg Paddy/ha)

	Present Policy	Irrigation Service Fees Revised to Cover: Full Cost of O&M	100% Cost Recovery O&M plus Capital Cost Assuming: Low Investment Cost	High Investment Cost
1. Gross receipts	3,458	3,458	3,458	3,458
2. Water Charges				
a. O&M	75	136	136	136
b. Capital Cost	-	-	905	1,567
3. Other purchased inputs excluding labor	416	416	416	416
4. Hired labor	269	269	269	269
5. Returns to family resources (if family owns all land farmed)	2,698	2,637	1,732	1,070

Table A1.21. Nepal: Hypothetical Costs and Returns to High Yielding Irrigated Agriculture, Assuming Changes in Policies Regarding Irrigation Service Fees (kg Paddy/ha)

	Present Policy	Irrigation Service Fees Revised to Cover: Full Cost of O&M	100% Cost Recovery O&M plus capital cost Assuming: Low Investment Cost	High Investment Cost
1. Gross receipts	6,315	6,315	6,315	6,315
2. Water Charges				
a. O&M	75	136	136	136
b. Capital Cost			905	1,567
3. Other purchased inputs excluding labor	1,014	1,014	1,014	1,014
4. Hired labor	277	277	277	277
5. Returns to family resources (if family owns all land farmed)	4,949	4,888	3,983	3,321

Table A1.22. Philippines: Irrigation Service Fee Rates (Cavans[a] per Hectare), 1985

Type of System	Rice[b]			Annual Crops[c]
	Wet Season	Dry Season	Third Crops	
Pumps				
Bonga Pump 1 to 3	3	5	5	8
Solana - Tuguegarao	8	12	12	
Angat - Maasim (AMRIS)	3	5	5	6
Libmanan - Cabusao	6	6		
Gravity				
UPRIIS	2 1/2	3 1/2	3 1/2	6
Other national systems	2	3	3	3
Communal				1 1/2[d]

[a] 1 cavan of paddy weighs 50 kilograms at 14% moisture content

[b] Irrigation fee rates for crops other than rice and annual crops are 60% of those for rice.

[c] Annual crops include bananas and sugarcane.

[d] Average annual amortization rate per hectare for all communal systems constructed by NIA or its predecessor agencies.

Notes:

1. Irrigation fees for pump irrigation systems differ due to costs of power which vary according to the source, i.e., National Power Corporation, electric cooperatives, private franchise holders, etc.

2. The hectarage planted to other crops in the national irrigation systems (NIS) is a very small proportion of the total irrigated area. In 1982, out of 513,926 hectares irrigated by the NIS, only 2,819 hectares was planted to other crops. The current government programs on crop diversification can be expected to increase the hectarage planted to other crops in the future.

3. World Bank-assisted projects are authorized to charge 7.9 cavans per double-cropped hectare within 5 years of project completion.

Source: NIA, 1985.

Table A1.23. Philippines: Real Value of Irrigation Service Fee Rates in National Irrigation Systems by Type of System and Season, 1975-1984 (1984 Pesos per ha)

Year	System			
	Pump		Gravity	
	Wet Season	Dry Season	Wet Season	Dry Season
1975	514	856	343	514
1976	516	860	344	516
1977	471	786	314	471
1978	439	732	293	439
1979	449	748	299	449
1980	420	700	280	420
1981	411	684	273	411
1982	414	689	275	414
1983	399	664	266	399
1984	335	558	223	335

Note: Nominal values were deflated by the Implicit GDP Deflator (ADB, 1985c).

Table A1.24. Philippines: Total Expenses Incurred in the Collection of Irrigation Fees in National Systems, 1982 - 1985

Year	Collection Expenses (000 pesos)	Incentives/ Bonuses (000 pesos)	Personnel Expenses[a] (000 pesos)	Total Expenses (000 pesos)	Total Expenses (pesos per ha)
1982	1,169	335	3,936	5,440	11
1983	1,944	680	4,282	6,905	13
1984	2,549	793	4,358	7,700	14
1985[b]	2,421	869	4,358	7,648	14

Source: NIA, 1985.

[a] Personnel expenses are based on a personnel density of 1 billing clerk per 3,700 ha. of service area and 1 bill collector per 7,400 ha. of service area, both with an average gross salary of P1,600 per month, 1982-85.

[b] Based on the estimated budget for 1985 and the same hectarage irrigated as in 1984.

Table A1.25. Philippines: Total Irrigation Service Fee Collections and O&M Fund Releases: 1979-1984

Year	Total Collections (in million pesos)		Fund Releases (in million pesos)		Collections as a percent of releases
	Current Pesos	1984 Pesos[a]	Current Pesos	1984 Pesos[a]	
1979	45.35	104.31	66.15	152.16	68.6
1980	59.24	118.51	85.75	171.55	69.1
1981	52.74	95.42	103.45	187.17	51.0
1982	57.49	95.91	108.14	180.41	53.2
1983	72.72	108.57	100.99	150.78	72.0
1984	98.95	98.95	132.35	132.35	74.8

[a] Current Pesos converted to 1984 Pesos using Implicit GDP Deflator (ADB, 1985c).

Sources: Philippines. National Irrigation Administration 1984b. NIA Annual Report with audited Income-Expense Statements.

Table A1.26. Philippines: Irrigation Fee Collectibles and Actual Collections in All National Irrigation Systems

Year	COLLECTIBLES (000 Pesos)			COLLECTIONS					
				From Current Account		From Back Account		Total Collections	
	Current Charges	Back Acct.	Total	000 Pesos	Percent	000 Pesos	Percent	000 Pesos	% of Current Account
1971-72	10,749	46,383	57,132	4,281	39.8	2,114	4.6	6,395	59.6
1972-73	12,174	50,737	62,911	5,052	41.5	2,807	5.5	7,859	64.6
1973-74	16,387	55,052	71,439	6,025	36.8	3,266	5.9	9,291	56.7
1974-75	17,538	62,156	79,694	7,162	40.8	3,152	5.1	10,314	58.8
1975-76	49,716	69,382	119,098	13,434	27.0	2,199	3.2	15,633	31.4
1977	85,396	130,318	215,714	27,733	32.5	10,278	7.9	38,011	44.5
1978	85,015	175,208	260,223	30,316	35.7	11,693	6.7	42,009	49.4
1979	112,754	227,407	340,161	35,553	31.5	11,229	4.9	46,782	41.5
1980	97,039	293,537	390,576	37,154	38.3	14,522	5.0	51,676	53.3
1981	130,483	314,345	444,828	46,451	35.6	12,124	3.9	58,575	44.9
1982	131,280	385,660	516,940	58,105	44.3	15,329	4.0	73,434	55.9
1983	118,425	432,433	550,858	56,775	47.9	15,788	3.7	72,563	61.3
1984	158,675	487,269	645,944	77,648	48.9	23,152	4.8	100,800	63.5

SOURCE: NIA Collection Efficiency Report, 1985.

Table A1.27. Philippines: Estimated Collection Efficiencies from Current Irrigation Service Fee Charges

Year of Billing	Current Charges	Amount of Current Charges Collected		Percent of Current Charges Collected		
		In Year of billing	In Following Year	In Year of billing	In Following Year	Total
71-72	10,749	4,281	2,807	39.8	26.1	65.9
72-73	12,174	5,052	3,266	41.5	26.8	68.3
73-74	16,307	6,025	3,152	36.9	19.3	56.3
74-75	17,538	7,162	2,199	40.8	12.5	53.4
75-76	49,716	13,434	10,278	27.0	20.7	47.7
77	85,396	27,733	11,693	32.5	13.7	46.2
78	85,015	30,316	11,229	35.7	13.2	48.9
79	112,754	35,553	14,522	31.5	12.9	44.4
80	97,039	37,154	12,124	38.3	12.5	50.8
81	130,483	46,451	15,329	35.6	11.7	47.3
82	131,280	58,105	15,788	44.3	12.0	56.3
83	118,425	56,775	23,152	47.9	19.5	67.5

Source: Calculated from Table A1.26, assuming all back account collections are from the previous year's billings.

Table A1.28. Philippines: Operation and Maintenance Costs of National Irrigation Systems, 1979-1984

Year	Service Area	Total O&M Fund Releases At System Level (million pesos)			O&M Fund Releases per Ha. of Service Area		Personnel As % of Total
		Personnel	Others	Total	Current Pesos	1984 Pesos[a]	
1979	477239	58.95	7.20	66.15	139	320	89.1
1980	472008	76.70	9.05	85.75	182	364	89.4
1981	492336	93.06	10.39	103.45	210	380	90.0
1982	508578	93.76	14.38	108.14	213	355	86.7
1983	549926	86.61	14.38	100.99	184	275	85.8
1984	559447	103.57	28.78	132.35	237	237	78.3

[a] Current Pesos converted to 1984 using Implicit GDP Deflator (ADB, 1985c).

Source: NIA, 1985.

87

Table A1.29. Philippines: Income of the National Irrigation Administration, by Source, 1983 and 1984
(million Pesos)

Source	1983		1984	
	million pesos	percent of total	million pesos	percent of total
Irrigation Service Fees	72.7	22.2	100.8	23.3
Other Operating and Service Income	134.5	41.0	128.6	29.7
Income from Investments	98.3	30.0	175.9	40.7
Miscellaneous Income	12.6	3.8	11.1	2.6
Sale of Assets	9.6	2.9	8.9	2.1
Grants	0.3	0.1	7.1	1.6
	328.0	100.0	432.4	100.0

Source: Philippines, National Irrigation Administration 1984b. Annual Audit Report on NIA for 1984.

Table A1.30. Philippines: Indicative Costs and Returns to Irrigated Rice Production (kg Paddy/ha)

Item	Wet Season[a]	Dry Season[b]	Per Year[c]
1. Gross Receipts	3,382	3,850	6,270
2. Water Charges[d]	100	150	213
a. for O&M	-	-	176
b. for capital repayment	-	-	37
3. Other purchased current inputs, excluding labor	502	655	993
4. Hired Labor	805	1,151	1,668
5. Returns to family-owned resources (if family owns all land farmed)	1,975	1,894	3,396

[a] Computed from Tepora, Caddarao and Monga, 1984. "Costs and Returns of Producing Palay in the Philippines, 1983". Costs in Pesos converted to kg of paddy at Pesos 1.46/kg.

[b] Computed from data in Philippines, National Irrigation Administration 1984a. "The Agricultural Input Loan: Irrigation Study." Peso cost converted at Pesos 1.46/kg.

[c] From columns 1 and 2 assuming dry season crop planted on 75 percent of area.

[d] 100 kg of paddy in wet season and 150 kg in dry season.

Table A1.31. Philippines: Hypothetical Costs and Returns to Irrigated Rice Production, 1983, Assuming Changes in Policies Regarding Water Charges[a]

Item	Present Policy	Water Charges Revised for 100% Cost Recovery (O&M plus capital cost) Assuming	
		Low[b] Investment Cost	High[c] Investment Cost
1. Gross Receipts	6,270	6,270	6,270
2. Charges Related to Water			
a. O&M	141[d]	141[d]	141[d]
b. Capital Cost	72	768	1,919
3. Other purchased current inputs excluding labor	993	993	993
4. Hired labor	1,668	1,668	1,668
5. Returns to family-owned resources (if family owns all land farmed)	3,396	2,700	1,549

[a] Using figures from Table A1.30.
[b] US$ 1,000/ha. Amortized assuming interest rate of 10% and 50 year life.
[c] US$ 2,500/ha. Amortized as above.
[d] Assuming an average O&M cost of Pesos 314 per ha irrigated converted at the 1984 support price of Pesos 2.23 per kg.

Table A1.32. Thailand: Budget Distribution of the Royal Irrigation Department for Operation and Maintenance Activities, 1981-1984

	1981	1982	1983	1984
Irrigable Area (000 ha)	3,332	3,782	3,782	2,930
Total Budget				
Amount (million baht)	1,066	1,120	1,486	1,852
Per ha (current baht)	320	296	393	632
Per ha (1984 baht)[a]	346	309	398	632
Operation				
Total (million baht)	490.5	621.2	687.5	680.9
Per ha (current baht)	147	164	182	232
Per ha (1984 baht)[a]	159	171	184	232
% of total	46%	55%	46%	37%
Maintenance				
Total (million baht)	382.7	300.6	444.4	516.0
Per ha (current baht)	115	80	118	176
Per ha (1984 baht)[a]	124	84	119	176
% of total	36%	27%	30%	28%
Rehabilitation				
Total (million baht)	193.3	199.0	354.2	655.0
Per ha (current baht)	58	53	94	224
Per ha (1984 baht)[a]	63	55	95	224
% of total	18%	18%	24%	35%

[a] Based on the Implicit GDP deflator (ADB, 1985).

Source: Operation and Maintenance Division, Royal Irrigation Department, 1985

Table A1.33. Thailand: Export Taxes and Central Government Revenue (million Baht)

Fiscal year	Total Central Govt. revenue	Rice premium (1)	Rice export tax (2)	Rice reserve requirement (3)	Proportion of export taxes to total Govt. revenues			
					(1)	(2)	(3)	Total
1961	7,212	830	189	-	11.5	2.6	0	14.1
1970	19,744	654	135	9	3.3	0.7	0.1	4.1
1975	39,034	795	514	665	2.0	1.3	1.9	5.2
1978	63,120	1,510	524	527	2.4	0.8	0.8	4.0
1980	93,933	1,517	907	738	1.6	1.0	0.8	3.4
1981	113,953	1,436	1,241	1,312	1.3	1.1	1.2	3.6
1982	116,309	971	1,093	330	0.8	0.9	0.3	2.0
1983[a]	141,000	850	1,085	-	0.6	0.8	0	1.5

[a] Estimated.

Source: World Bank, 1985a. Thailand: Pricing and Marketing Policy for Intensification of Rice Agriculture.

Table A1.34. Thailand: Estimated Government Revenues from Rice Premium and Export Taxes Attributable to Irrigation in Selected Years.

Item	1980	1982	1984
1. Incremental production due to irrigation (million tons paddy)[a]	4.03	4.03	4.03
2. Rice exports (million tons paddy equivalent) [b]	4.18	5.65	6.76
3. Maximum proportion of exports attributable to irrigation (line 1 ÷ line 2)	.96	.71	.60
4. Total revenue from rice export taxes (million baht)[c]	3,162	2,394	1,203
5. Total revenue from rice premium and rice export tax attributable to irrigation (million baht) (line 3 x line 4)	3,036	1,670	722

[a] Based on assumed increase in production due to irrigation of 1.375 tons per ha, and an area of irrigated paddy of 2.93 million ha Table A1.32).

[b] 1980 and 1982: Thailand. Center for Agricultural Statistics. 1984 Agricultural Statistics of Thailand Crop Year 1983/84, pp 132-133. 1984: Estimated from Anonymous 1985. "Rice: New Policies". Bangkok Bank Monthly Review, February 1985, p 89.

[c] 1980 and 1982: From Table A1.33.
1984: Estimated by multiplying (a) the 1982 ratios of average revenues collected per ton of total rice exports to the official premium and export tax rates per ton by (b) the average 1984 official rates (200 baht per ton for the rice premium and 172 baht per ton for the rice export tax).

(92)

Table A1.35. Thailand: Indicative Costs and Returns to Irrigated Rice Production (kg paddy/ha)

	Wet Season Broadcast Traditional Techniques	Wet Season Transplanted Traditional Techniques	Dry Season Transplanted Modern Techniques
1. Gross Production	1,750	1,875	3,750
2. Water Charges	0	0	0
3. Other purchased current inputs excluding labor	674	625	729
4. Hired Labor[a]	188	229	300
5. Returns to family-owned resources (if family owns all land farmed)	888	1,021	2,721

[a] Assumes 40% of labor hired

Source: World Bank, 1980. Thailand : Case Study of Agricultural Input and other Output Pricing.

Table A1.36. Thailand: Hypothetical Costs and Returns to Irrigated Rice Production, Assuming Changes in Policies Regarding Irrigation Service Fees (kg paddy/ha)

	Present Policy	Irrigation Service Fees Established to Cover: O&M Only	O&M plus 100% Capital Cost Assuming: Low Capital Cost[c]	O&M plus 100% Capital Cost Assuming: High Capital Cost[d]
1. Gross Receipts[a]	3,125	3,125	3,125	3,125
2. Charges Related to Water				
a. O&M[b]	0	223	223	223
b. Capital Cost	0	0	1,259	2,519
3. Other purchased inputs[a] excluding labor	868	868	868	868
4. Hired Labor[a]	329	329	329	329
5. Returns to family resources (if family owns all land farmed)	1,928	1,705	446	-814

[a] Using figures from Table A1.35 and assuming that in wet season transplanted rice is grown with traditional techniques over full area and in dry season Transplanted rice is grown with modern techniques in one-third of area.
[b] Using average amount budgeted for O&M and rehabilitation per ha from Table A1.32 of Baht 632/ha in 1984, converted to paddy at the estimated farm price of 2.84 baht/kg.
[c] $ 1500/ha. Amortized at 10% interest and 50 year project life.
[d] $ 3,000/ha. Amortized as above.

94

Annex 2

Regional Study on Irrigation Service Fees: Terms of Reference

(i) discuss the basic principles governing the determination of irrigation service fees (including efficiency, cost recovery and equity considerations), and to the extent data permits, illustrate these with reference to projects in the countries concerned;

(ii) discuss the desirability and feasibility, in the short and long term, of alternative measures, or combinations of measures, for establishing an appropriate structure of irrigation service fees;

(iii) review past performance in developed and developing countries, with respect to irrigation service fees and taxes levied in the agriculture sector that relate to irrigation service, discussing, among other things costs of administration, collection efficiencies and the extent to which success has been achieved in recovering O&M and capital costs;

(iv) review and discuss alternative procedures for allocating funds for O&M, and analyze the various requirements for a high quality of O&M, including the extent to which it depends on a high level of cost recovery;

(v) estimate, as far as practicable, the future average costs of O&M per hectare in each country for different irrigation schemes; such as gravity, pumping and tubewell schemes;

(vi) review the role of irrigators' associations in maintaining tertiary systems and cost recovery and their supplemental efforts in the O&M of the main and secondary systems; suggest ways to improve the effectiveness of such associations with regard to O&M where they exist and how they could be established in countries where they do not exist; and

(vii) prepare a Study Report in the light of desk and field studies focussing on policy perspectives; these will include among others; (a) alternative levels and patterns of cost recovery through irrigation service fees and other mechanisms; (b) an evaluation of alternative mechanisms in terms of implementability; (c) ways and means of improving and refining existing irrigation service fee and other cost recovery mechanisms; and (d) allocative procedures for funds for O&M from the central budgetary pool.