PN-AAW-673 62
ISN = 49197
9311176

WATER AND SANITATION FOR HEALTH PROJECT

COORDINATION AND INFORMATION CENTER

Operated by The CDM Associates
Sponsored by the U. S. Agency for International Development

1611 N. Kent Street, Room 1002
Arlington, Virginia 22209 USA

Telephone: (703) 243-8200
Telex No. WUI 64552
Cable Address WASHAID

The WASH Project is managed by Camp Dresser & McKee Incorporated. Principal Cooperating Institutions and subcontractors are: International Science and Technology Institute; Research Triangle Institute; University of North Carolina at Chapel Hill; Georgia Institute of Technology—Engineering Experiment Station.

# VILLAGE WATER SUPPLY AND SANITATION IN NORTHEAST THAILAND

## FIELD REPORT NO. 19

JULY 1981

Prepared For:
USAID
Thailand
Order of Technical Direction No. 38

WATER AND SANITATION FOR HEALTH PROJECT

COORDINATION AND INFORMATION CENTER

Operated by The CDM Associates
Sponsored by the U.S. Agency for International Development

1611 N. Kent Street, Room 1002
Arlington, Virginia 22209 USA

Telephone: (703) 243-8200
Telex No. WUI 64552
Cable Address WASHAID

The WASH Project is managed by Camp Dresser & McKee Incorporated. Principal Cooperating Institutions and subcontractors are: International Science and Technology Institute; Research Triangle Institute; University of North Carolina at Chapel Hill; Georgia Institute of Technology—Engineering Experiment Station.

20 July 1981

Mr. Edward Ploch
USAID Mission
Bangkok, Thailand

Attention: Mr. David Oot, O/HPN

Dear Mr. Ploch:

On behalf of the WASH Project, I am pleased to provide you with fifteen copies of the final report by Mr. James Arbuthnot and Mr. Robert Thomas on village water supply and sanitation in Northeast Thailand. This report contains all the findings and recommendations of the consultants.

The visit of the consultants to Thailand and this report are the result of a request for assistance by the USAID Mission on 18 November, 1980. The WASH Project was authorized to undertake the work by USAID/Washington, DS/HEA, in Order of Technical Direction No. 38, dated 8 April, 1981.

We look forward to your comments and will be happy to discuss any questions you may have regarding the findings or recommendations contained in this report.

Sincerely yours,

Dennis B. Warner

Dennis B. Warner, Ph.D., P.E.
Acting Project Director

DBW:jml

WASH FIELD REPORT NO. 19

THAILAND

# VILLAGE WATER SUPPLY AND SANITATION IN NORTHEAST THAILAND

Prepared for USAID Mission Bangkok
under Order of Technical Direction No. 38

Prepared by:

James Arbuthnot, P.E.
and
Robert H. Thomas, P.E.

July 1981

Contract No. AID/DSPE-C-0080
Project No. 931-1176

TABLE OF CONTENTS


| Chapter | | Page |
|---|---|---|
| | LIST OF ABBREVIATIONS USED | iv |
| | EXECUTIVE SUMMARY AND RECOMMENDATIONS | v |
| 1. | BACKGROUND | 1 |
| 2. | EXISTING WATER SUPPLIES | 3 |
| | 2.1 Source of Information | 3 |
| | 2.2 Environmental Conditions | 3 |
| | 2.3 Existing Water Sources in the Northeast | 5 |
| | 2.3.1 Rural Piped Water Systems | 8 |
| | 2.3.2 Past Reviews of the Rural Piped Water Systems | 9 |
| | 2.4 The Need for Water Supply Improvement | 10 |
| | 2.5 Constraints and Difficulties | 13 |
| 3. | CONDITION OF EXISTING SANITARY LATRINES | 16 |
| | 3.1 Type, Distribution and Cost of Latrines | 16 |
| | 3.2 Biogas Generators | 18 |
| 4. | NON-PIPED WATER SUPPLY OPTIONS | 19 |
| | 4.1 Important Factors | 19 |
| | 4.2 Sanitary Considerations | 19 |
| | 4.3 Cost of Non-Piped Water Supply Options | 21 |
| | 4.4 Water Treatment | 24 |
| | 4.5 Conclustions on Non-Piped Water Systems | 25 |
| 5. | PIPED WATER SUPPLY OPTIONS | 28 |
| | 5.1 Factors Affecting Piped Water Supply Technology and Cost | 28 |
| | 5.2 Private Versus Public Outlets | 29 |

5.3 Quantity of Water from Piped Systems..... 31

5.4 Barangay and Conventional Systems of Water Distribution..... 32

5.5 System Storage..... 35

5.6 Sources and Relationship to Treatment..... 37

5.7 Water Treatment..... 40

5.8 Review of TAMS Design for Water Treatment..... 47

5.9 Administration of Village Piped Water Supplies.. 49

6. ECONOMIC CONSIDERATIONS..... 50

7. SUGGESTIONS FOR FURTHER STUDIES..... 54

7.1 Studies Preparatory to the Project Paper..... 54

7.2 Basic Studies Undertaken as Part of the Project..... 56

REFERENCES..... 57

BIBLIOGRAPHY..... 58

APPENDICES

A. Order of Technical Direction and Terms of Reference..... 60
B. Persons Consulted..... 73
C. Field Observations..... 75
D. Principal Central Government Agencies..... 77
E. Observations on Water Treatment Works Treating Surface Water..... 79
F. Thai Ministry of Interior Memorandum to Provincial Governors..... 81
G. Note on Bamboo Reinforcement of Cistern..... 84
H. Letter to James Arbuthnot, WASH, from Daniel Dworkin, PPC/AID, dated July 1, 1981..... 85

FIGURES

1. Map of Thailand Showing Provinces in the Northeast..... 4
2. Map of Northeastern Thailand Showing Relative High and Low Income Areas..... 6
3. Barangay III A Water System Service Detail..... 33

4. Wood Stave Elevated Tank - 10 Cubic Meter Capacity..... 38
5. Low Cost Slow Sand Filter Plant..... 43
6. Simple Iron Removal Plant..... 44
7. Wholesale Price Index, 1968-1979..... 53

TABLES

4.1 Households Estimated Served by Various Sources..... 22
4.2 Cost of Non-Piped Options..... 23
5.1 Summary of Distribution Costs..... 36
5.2 Water Treatment Plant Construction and Operating Costs..... 46
5.3 1981 Costs of Various Piped Water Systems..... 48

## LIST OF ABBREVIATIONS USED

| | | |
|---|---|---|
| RTG | - | Royal Thai Government |
| MOPH | - | Ministry of Public Health |
| RWSD | - | Rural Water Supply Division (of MOPH) |
| PWWA | - | Provincial Water Works Authority |
| MOI | - | Ministry of the Interior |
| PWD | - | Public Works Department (of MOI) |
| DMR | - | Department of Mineral Resources |
| ARD | - | Office of Accelerated Rural Development (MOI) |
| NESDB | - | National Economic and Social Development Administration |
| NIDA | - | National Institute of Development Administration |
| WHO | - | World Health Organization |
| LDC | - | Less Developed Country |
| PID | - | Identification Document |
| TAMS | - | Tippetts, Abbett, McCarthy and Stratton |
| cu m | - | Cubic Meter |
| cu m/hr | - | Cubic Meters Per Hour |
| lcd | - | liters per capita per day |

## EXECUTIVE SUMMARY AND RECOMMENDATIONS

The results of the WASH team field investigations and consultations in Thailand regarding rural water supply in the northeast can be summed as follows:

1. Village people in Northeast Thailand have a great need for more and better water. There are about 20,000 villages with populations up to 2,000 in this region. Their combined population exceeds 12 million. About one percent of these villages have piped water supply systems. There is both a perceived and an actual need. The perceived need in general derives mainly from a desire for convenience and saving of effort. In the dry season, when stored rainwater is not available, there is also, in most of the Northeast, a perceived need for drinking water that does not taste of iron.

2. Village people in Northeast have strong preferences regarding drinking water which are not necessarily related to safety per se. Certain shallow wells are strongly preferred in some villages. Water from drilled wells containing iron is disliked and avoided for drinking and for preparing food because of the taste. Water from piped systems is considered unsuitable for drinking if it tastes of chlorine (which it should for safety if it comes from surface sources). The taste of rainwater is considered neutral and satisfactory, and even polluted surface water is preferred to highly mineralized or chlorinated water.

3. While people may become accustomed to the taste of a strongly flavored water (such as that which is chlorinated or which contains iron and manganese) if they are exposed to it continuously, the availability and use of rainwater for drinking in the wet season appears to make this unlikely in Northeast Thailand.

4. If currently unsanitary but preferred sources of drinking water are made sanitary, much water borne disease will probably be prevented. If villagers are provided with safe water but their preferred drinking water sources are left unprotected, there may or may not be an improvement in health.

5. A convenient supply of relatively safe water in adequate quantity for cleanliness will tend to prevent the spread of water washed and possibly water borne diseases. "Convenient," here implies delivery to the premises. It is not certain, however, that any practicable water supply or

sanitation program will lead directly to any measurable health improvement.

6. If village people are provided with iron- and manganese-free water from piped systems, they may or may not use it as their primary source of drinking water all year around, but they are likely to drink it some of the time. This likehood will be reduced if the water is chlorinated.

7. The majority of homes in many villages are using water seal latrines, but in the Northeast as a whole only about 23 percent of houses have them. Some villages have biogas generators. There are relatively few biogas generators in any one village but relatively few are needed to markedly reduce putrescible material and fly breeding. Continuation of programs to install water seal latrines and biogas generators will tend to diminish not only water borne diseases by eliminating sources of infection but also the incidence of certain important intestinal parasites such as round worm and hookworm. Satisfactory use and cleaning of a water seal latrine requires an adequate supply of water (not necessarily piped) at or near the home.

8. From 1966 through 1969, USAID assisted the Royal Thai Government to construct village water supply systems. USAID provided the services of an American firm of consulting engineers, Tippets, Abbett, McCarthy, Stratton (TAMS), for this purpose. The water systems were well designed and well constructed. Because of difficulties in collecting operating revenues, most of the new systems apparently stopped operating within three or four years after the program was completed.

9. The smallest size of standard water treatment plant designed by TAMS was of 10 cubic meters capacity. For populations up to 2,000, assuming 16 hours per day operation, the maximum plant capacity needed is 12 cubic meters. For plants in this size range, alternative designs can result in cost savings by comparison with the TAMS designs, and subsequent Ministry of Public Health (MOPH), modifications for surface water treatment plants.

10. Sometime prior to 1975 the Rural Water Supply Division (RWSD) of the MOPH perceived a solution to the problems of rural water systems, obtained a budget from the Government for renovating these water systems, and got the agreement of the water system administrators to connect them to fully metered systems. Free standposts were disconnected and water was supplied only directly to houses through meters. MOPH field engineers visited the systems

regularly to advise the system operators. This resulted in improved revenue collection and maintenance and produced the situation reported in the Dworkin-Pillsbury Impact Evaluation Report.

11. Two years ago the MOPH lost its mandate to assist rural piped water systems and its budget for this purpose. The systems, and especially the treatment facilities for which MOPH technical assistance was most needed, have since deteriorated. In view of the time elapsed since the meters were installed, their maintenance and repair is likely to become a matter of major importance within the next three or four years. Unless the management and operation of these systems are seriously addressed increasingly rapid deterioration is likely to occur.

12. The feasibility of a piped water supply program for rural villages is dependent on the establishment of a suitable administrative arrangement which does not exist at present. Rural piped water systems need technical support, full-time operating personnel with a sense of responsibility toward system users, and the provision of spare parts and repair services. Renovation of existing systems and/or construction of new systems without such support will not have lasting benefit.

13. It was suggested that operation of the water system by a national government agency would solve the administrative problem. In the short term, it might. However, the responsible officers of the agency would be too far away from and in no way responsible to the water system users. We conclude that it is better in the long run to count on self-interest on the part of the system users rather than the continued presence at every level of dedicated central government officials. The technical assistance of trained advisors will continue to be needed. In time the provincial level of government may be able to provide these, but in view of the small numbers of well-trained and experienced technologist even at the central government level, this does not appear likely in the near future.

14. Even with standardization of certain designs, any program for the establishment of several hundred new piped water supply systems would require substantial data collection, study and design work, as well as supervision of construction. Competent and experienced Thai engineers exist in the Provincial Water Works Authority (PWWA), MOPH and the Public Works Department (PWD) but do not appear to be available to provide engineering services for a large new program.

15. The lowest cost water supply safety improvements and in some cases the quickest to implement, is the repair of dug wells. To be effective, such a program may need to include construction of new dug wells. Health benefit and ease of implementation also favor extended installation of rainwater cisterns. However, the cost is high -- the equivalent of about ฿165 (US$1.00 = approximately 20 bhat) per user per year, compared to ฿80 to 220 per user per year for piped water supply systems which provide more water.

16. The cost of piped water supply depends on the water source, method of distribution, and village size. Groundwater supply is marginally less expensive than surface supply, taking into account the cost of iron removal. The cost of the restricted-flow Barangay III A system of distribution to each house is about 80 percent of that of conventional metered supply to each house (assuming only one tap in each house). On a per user basis, systems with shared connections (one metered connection to every three households) are estimated to cost about 70 percent of conventional metered systems and unmetered public standpost systems about 60 percent. These latter two systems provide less water than the conventional system but on a cost per cubic meter basis are more expensive than the conventional system or Barangay system. For a village population of 750 and density requiring 16 meters of distribution pipe per household served, a conventional system with a surface source of supply treated by plain sedimentation, slow sand filtration and chlorination, the cost per cubic meter is estimated to be ฿8.4 and the annual cost per capita about ฿220.

17. Construction costs of piped village water supply systems are expected to average approximately ฿1000 per capita, of which about ฿700 represents materials cost. For larger villages the per capita cost will be less. To the above figures should be added about 30 percent for contingencies and engineering plus provision for currency inflation from 1981 to the mid-year of the program.

18. The acceptability and use of public water supplies depends upon the users contributing to the cost. The availability of a free government-sponsored systems (such as hand-pumped deep wells) has a severe limiting effect on the demand for piped or other systems which require payments from users. It appears that a substantial part (possibly half) of the rural population of the Northeast could afford to pay at least the operating cost of piped water supply.

We recommend that:

1. Piped water supplies be pursued as one of a number of options for rural villages in Northeast Thailand but not as a universal solution for all villages.

2. Conventional individually metered systems, Barangay Type III-A systems, and shared water systems should all be subjected to further evaluation for socioeconomic feasibility. At least the Barangay Type III-A system should be subjected to full scale testing in at least some villages as part of any AID-funded program.

3. Water treatment plants for villages up to 2,000 population should incorporate the following features:

   - Slow sand filters for treating surface water instead of rapid sand filters;
   - Simple aeration and direct filtration for treating groundwater instead of slow sand filtration (there is an appropriate MOPH design for this);
   - Wood stave or ferro-concrete elevated storage tanks instead of reinforced concrete;
   - Ferro-concrete-lined earth embankments instead of concrete walls in certain size treatment plants; and
   - Use of smaller treatment works for most villages than any of the (TAMS) designs (in part, by providing for 16 hours per day operation);

4. Any program incorporating piped systems should ensure that safe water is provided for as many people as possible in each village in the program. This need not be entirely by direct piped supply, but to the extent necessary should include provision of rainwater cisterns, protection of dug wells and, where groundwater is free of iron or manganese, hand-pumped wells. (If this is not done, the solution to the easier part of the problem makes it less likely that the more difficult part -- addressing the needs of the poorer or peripheral areas of a village -- will be solved within a reasonable period of time.)

5. In villages which are not to be provided with a piped water system, all dug wells used for drinking should be made reasonably sanitary, and a program for helping people build cisterns to store rainwater should be initiated. Certain experimental or developmental work is also recommended.

6. In order to ensure proper system selection, use, maintenance and operation, significant user participation should be a firm requirement for all government assistance in rural village water supply, regardless of the type of system or facility to be provided.

7. The establishment or initiation of a suitable administrative arrangement, including provision for user participation and for continued maintenance and user fee collection, planning and budgeting should be a pre-requisite to the capital funding of any piped water supply program.

8. Pre-Project Paper studies should include manpower and organizational studies, socioeconomic studies, the development of guidelines for establishing base-line data, development of criteria for selection of villages to be assisted, and establishment of the extent of pre-design technical investigations required before the project is planned.

## Chapter 1

## BACKGROUND

In May 1980, the Health, Population and Nutrition Division of U.S. Agency for International Development (USAID) in Thailand prepared a paper entitled, USAID/Thailand Health, Population and Nutrition Needs Assessment. A conclusion of this paper was that USAID could best support efforts to increase life expectancy in four ways, one of which was "increasing water and environmental sanitation availibility." In September 1980 USAID/Thailand prepared a Project Identification Document (PID) entitled, "Rural Water and Sanitation Project." The stated purpose of the project was "to increase the availability and use of clean (potable) water and sanitary latrines in approximately 300 villages in Northeast Thailand." Financing to the extent of $7,500,000 was proposed, $6,000,000 as a loan and $1,500,000 as a grant.

On 18 November 1980 AID/Thailand sent cable Bangkok 55702 to AID/Washington for DS/HEA (see Appendix A). This cable requested technical assistance from the WASH Project, and outlined terms of reference for a proposed WASH team. On 8 April DS/HEA issued "Order of Technical Direction" (OTD) Number 38 to the WASH Project. This OTD requested the services of two senior sanitary engineers, knowledgeable in rural water supply and sanitation, in Bangkok to assist with the Rural Water and Sanitation Project planning activities.

The WASH team's terms of reference, as agreed between USAID/Thailand and DS/HEA, are set forth in cable Bangkok 19515 of 20 April 1981 (Appendix A). The terms of reference were further limited in the field of economic feasibility by memo dated 4/23/81 from David Oot of USAID Thailand to James Arbuthnot of WASH and Eugene McJunkin of DS/HEA (see Appendix A). In summary, the WASH team was asked to:

- review the fiscal year 1982 water and sanitation PID
- provide a preliminary assessment of the technical and economic feasibility of providing piped clean water to small rural communities
- review Tippetts, Abbett, McCarthy and Stratton (TAMS) designs and alternative low cost piped water systems
- identify, describe and technically assess appropriate non-piped water systems
- identify per capita costs and provide preliminary assessment of potential for recovering costs through user fees
- prepare scopes of work for further studies of design issues.

The memorandum of April 23, 1981 (see Appendix A) asked the team to prepare an economic analysis "showing cubic meter and per capita costs and other unit costs of a range of piped and non-piped systems," rather than prepare an "assessment of economic feasibility." The memorandum also delineates AID/Thailand's desire that the WASH team should "provide a preliminary assessment and comments regarding the economic feasibility of the alternative (rural water) systems indentified." It was understood that information about the economic status and ability to pay of the rural village people would be provided by USAID/Thailand staff.

In accord with OTD Number 38 one member of the WASH team arrived in Thailand on April 12, 1981 and one on April 13 to perform the work described above and to prepare the report which follows.

## Chapter 2

## EXISTING WATER SUPPLIES

### 2.1 Source of Information

Our information on existing water supply and related conditions in the 16 Northeast provinces of the proposed project area (see Figure 1) is based on:

- Review of the Project Identification Document and reports by others available in the AID Thailand Mission Office (see Appendix A).
- Discussions with AID, Government and other knowledgeable persons in Bangkok, Saraburi, Khon Kaen and Khorat (see Appendix B).
- Visits of inspection to four villages in the vicinity of Saraburi (not in the Project area), six villages near Khon Kaen and three villages near Khorat (see Appendix C).
- Information on construction methods and costs provided by Metropolitan Engineering Consultants Co., Ltd. of Bangkok.

It is apparent that there is a serious lack of baseline data on existing water supply facilities, levels of service, uses made of water by village people, and on the remaining needs in the Project area. We understand that during the balance of this year the Ministry of Public Health intends to conduct a simple nation-wide village-by-village survey of the existence of wells and other drinking water supply systems.

### 2.2 Environmental and Economic Conditions

Certain basic factors influence all activities in the Northeast, including the supply of water.

Most villages in the Northeast subsist by agriculture and are dependent upon rain rather than irrigation for their crops though there is some irrigation and the government intends to expand irrigation.

Four months of the year (November, December, January and February) are considered dry months with very little rain. Some years the rainless period may start in October or extend into

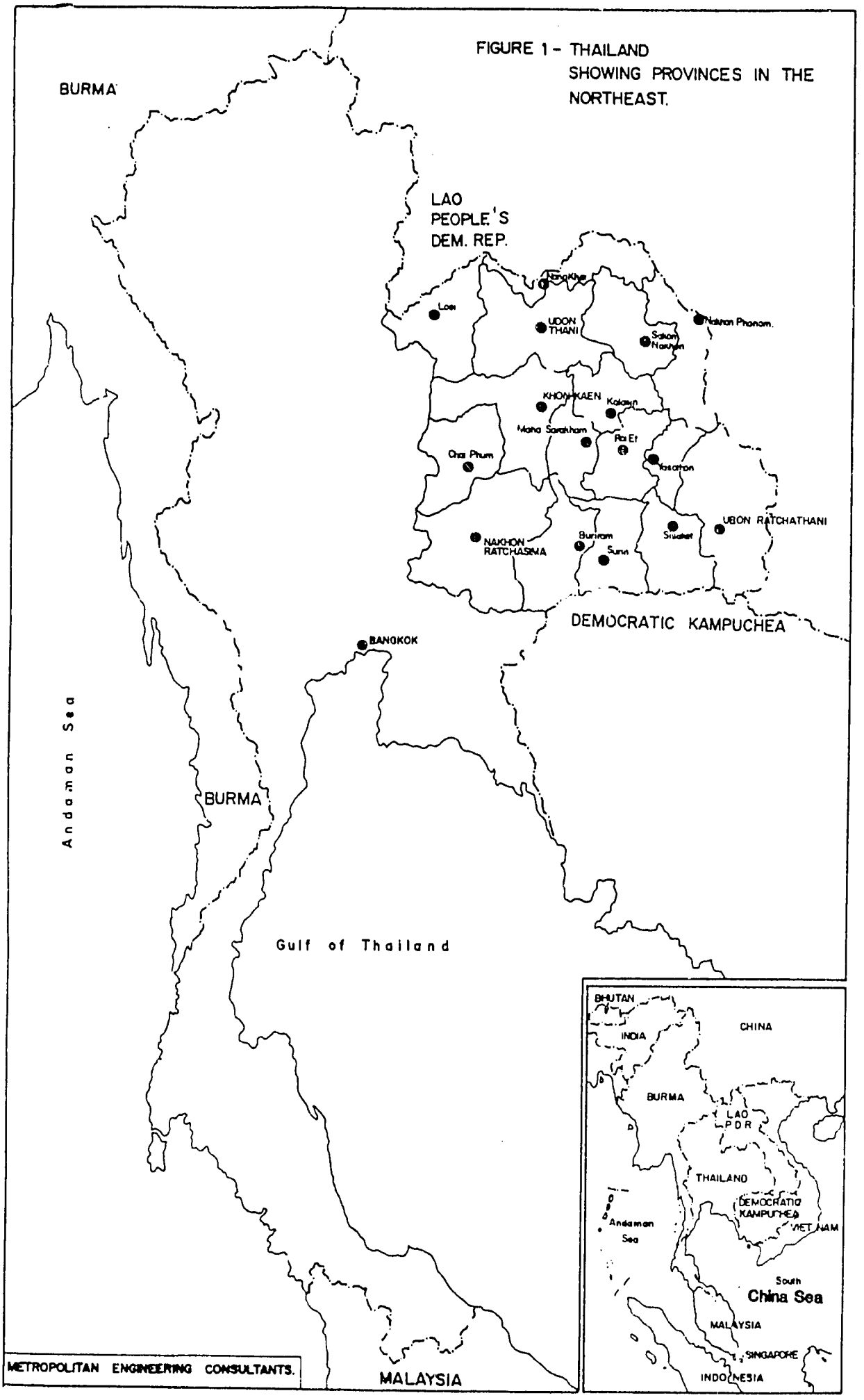


FIGURE 1 - THAILAND
SHOWING PROVINCES IN THE
NORTHEAST.

METROPOLITAN ENGINEERING CONSULTANTS.

March. Even if some rain occurs in March or April, water sources are very low through these months, and sufficient runoff from rain to refill ponds or cisterns or to replenish shallow well sources may not occur. The effective dry season for water supply planning purposes is 180 days.

There is rain every year. Eighty percent of the time in most of the area rainfall will exceed a meter during the wet season, and twenty percent of the time over most of the area it exceeds 1.8 meters.

The Northeast generally does not have much alluvium, differing greatly from Central Thailand in this respect. Deep wells must generally draw water from fractures in the bedrock. The great majority of tubewells (drilled wells) have water containing iron or manganese or both. These cause a taste in the water, and may stain clothes or rice and give an objectionable odor to rice. In large areas the water in wells, deep or shallow, is salty.

In the socioeconomic survey of 1975-76 over 40 percent of the rural households in the Northeast were considered to be below the poverty line then set at about ฿2,000 per person per year. This survey found there was generally relatively little variation in wealth and income within a village or an area but relatively large variation among villages and areas (see Figure 2).

## 2.3 Existing Water Sources in the Northeast

The Evaluation of Rural Water Supply Projects in Thailand prepared by the National Institute of Development Administration (NIDA) in 1978 reported a survey of 195 villages in the Northeast, on average to have water sources as follows:

| | |
|---|---|
| Surface Water Sources (Ponds, Canals, Streams, etc.) | 5.5 per village |
| Tube Wells | 2.1 per village |
| Dug Wells (Shallow Surface Wells) | 12.3 per village |
| Total Water Sources | 19.9 per village |

This survey was made in the dry season. Probably in the rainy season rain water from roofs and stored in cisterns would have been a common source.

This survey also reported that, on average, there was less than one-half (0.46) of one tube well per village which was classed as preferred (that is, gave a substantial quality of good water). This means only about 22 percent of the tube wells were

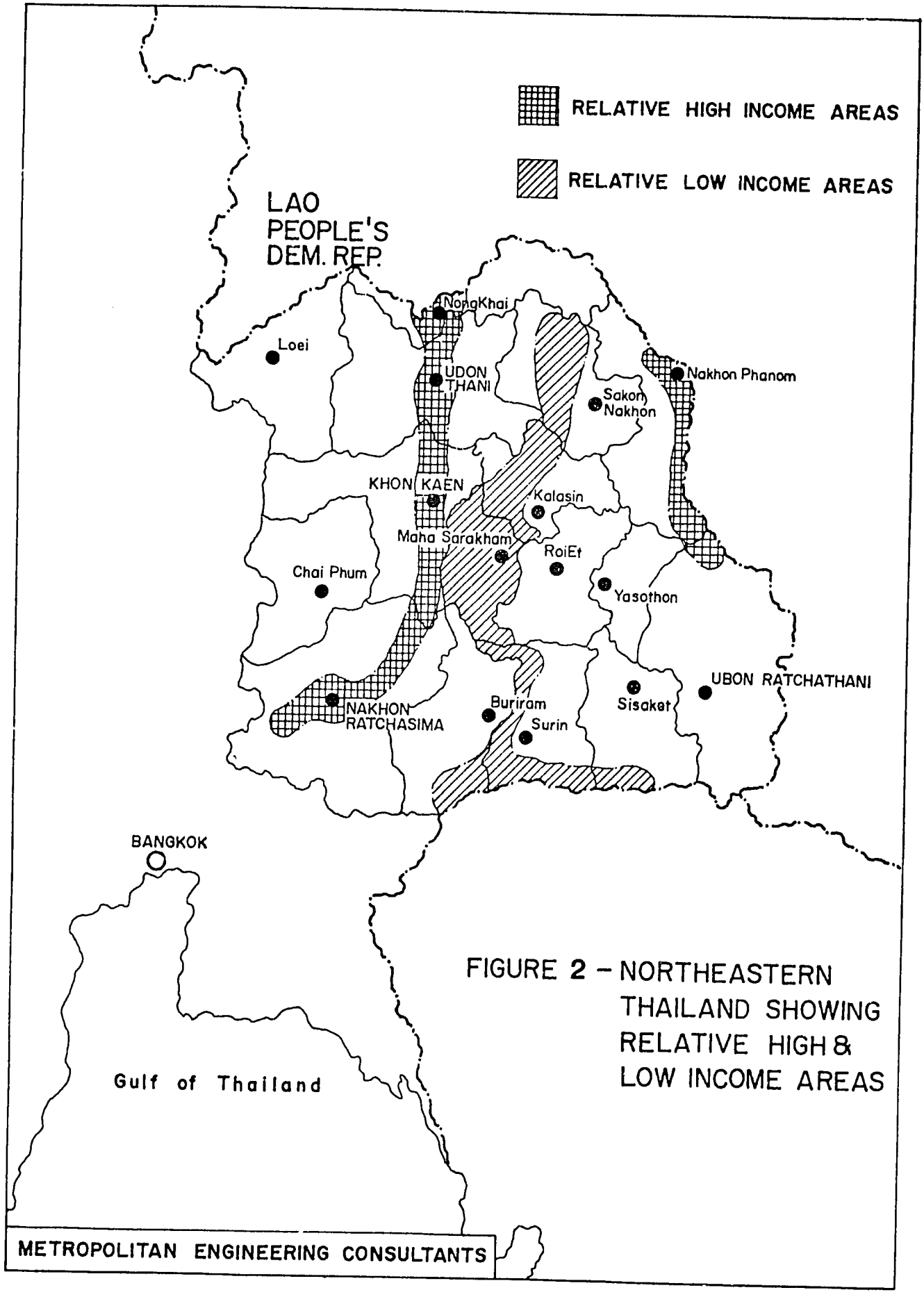


FIGURE 2 – NORTHEASTERN THAILAND SHOWING RELATIVE HIGH & LOW INCOME AREAS

considered satisfactory by the village people. Of the dug wells, 78 percent were rated "preferred" by the village people. Eighty-four percent of the government ponds and 76 percent of other surface sources were also rated "preferred."

The household usage rate for (a) drilled wells of the Department of Mineral Resources (DMR), (b) drilled wells of the Accelerated Rural Development Program (ARD) and for tube wells (shallow, small diameter drilled wells) were reported as 74 percent, 62 percent and 48 percent, respectively. Utilization of these same wells for drinking was reported as 12 percent, 14 percent and 17 percent, respectively. In explanation of the apparently contradictory trend for the two types of use, we postulate that the Department of Mineral Resources wells were used more because they were more available. Its wells are deep and well developed; probably yield is good. Also, this department has a good maintenance program for handpumps. The same wells may have been used less for drinking because they were deeper and contained more minerals which give a taste to the water.

Only about 40 percent of the villages had shallow wells (dug wells) in "operational" condition (the survey was made at the end of the dry season). This means that among the villages having shallow wells operational throughout the year each had almost 30.

No village included in the survey had piped water service. The National Institute of Development Administration (NIDA) report that village people dislike water from drilled wells "even though the water is fresh and without smell or taste" and that "the first preference is always given to water from surface sources".

Our discussions with knowledgeable government officials and with people in the 13 villages we visited confirm that village people have decided opinions on drinking water. Some villages have a very decided preference for water from some dug wells. This was explained to us by Mr. Charoen Piancharoen of the Department of Mineral Resources as often due to a residue from feldspar or kaolin formations which gives a distinctive taste considered "sweet". A number of preferred dug wells were observed drawing water from a distinctive white, firm, soft rock, presumably one of the formations named by Mr. Charoen.

There was general agreement that water tasting of iron or other minerals, as water from most drilled wells does, was not drunk. The piped water also was generally not drunk. Water from surface sources was drunk in preference to either water from drilld wells or water from piped systems. Rain water collected from roofs and stored in cisterns was considered neutral and

unobjectionable and was widely drunk when available, that is during the rainy season and for a month or so thereafter.

In regard to the village people's preferences for water, we quote results from the survey of 195 villages in the Northeast made by NIDA:

> "When there were a lot of sources in a village, inquiry was made to find the preferred order of water sources by having interviewees choose from two alternatives. It was shown that in all cases villagers prefer water from surface sources to drilled wells. If there are several water sources within a village with a similar quality of water, the people will choose the one which is closest to their houses, irrespective of whether it is a surface water source or a drilled well. However, where a drilled well yields water with an iron smell, or a tube well is polluted, the well will not be utilized whatsoever... Normally villagers will not utilize water from drilled wells for drinking or cooking."

All our information confirms the general applicability in the Northeast of the survey results quoted above.

### 2.3.1 Rural Piped Water Systems

Ten village piped water systems were visited. Available reports discussing village piped systems were reviewed, particularly the Dworkin and Pillsbury report (Ref. 1). Much information was obtained from two engineers of the Department of Health of the Rural Water Supply Division, Mr. Chetpan Karnkaew and Mr. Paibol Boonyakanjama, each of whom seemed to be both very knowledgeable and frank.

Of the ten piped water systems visited, one had never operated as the well which was the source was inadequate. Two systems which obtained water from surface sources were not operating temporarily, due to a broken pump but were expected to be back in service "tomorrow".

Of the five piped systems seen which were treating surface water, one was chlorinating at a rate estimated to be one-tenth or perhaps one-fifth the effective amount. The others did not pretend to disinfect the water. Of the four systems which should have been using a coagulant, one was using it, one may have been, and two were definitely not using a coagulant. One treatment plant was being bypassed completely (even the filter was being bypassed), and the untreated pond water was being pumped directly to town. All these piped systems from surface sources were producing unsafe water, and one was producing water which was dangerous owing to the character of the source.

Despite our opinion of the water and despite the general reluctance of villagers to drink it if there is a choice, the piped water seemed to be desired. During the dry season the village people are pleased to have water delivered conveniently to their door if they can afford it. People who refuse a water connection to their houses either cannot afford it or find the supply to be unreliable and in insufficient quantity to be worth the charges.

In the Northeast villages visited, there were several examples of shared use of metered connections. In one case, the secondary consumer said he paid ฿3.0/cubic meters (the official metered rate). In another case,, the secondary consumer was charged ฿1.0 for six pails (say ฿10-15 per cubic meter). In two Northeast villages, families with connections to the piped system were paying about ฿30 per month. In one of the villages many houses were not connected to the water system, and one of the families which did have piped water said they did not use it much because ฿30/ month was too expensive (this system worked for only one hour per day). A monthly payment of ฿30/ month for a family of six at the common official metered rate of ฿3.0/cubic meter would be equivalent to 56 liters/capita/day (lcd). (This is based on cost only; actual production and consumption could not be determined at any of the systems visited; most, however, were functioning, if at all, at much less than design capacity).

A well metered system near Saraburi with 222 households connected to it collects ฿7,000/month at ฿3.5/cubic meters; equivalent (at six persons per household) to 50 lcd.

Apparently the great majority of connections are metered. Charges are often in the vicinity of ฿3 per cubic meters, more than is presently paid in Bangkok or in Khon Kaen.

### 2.3.2 Past Reviews of the Rural Piped Water Systems

USAID has commissioned two reviews of the rural piped water systems. One review was conducted in 1972 by the Office of the Auditor General. One was done in 1979 by Daniel Dworkin of PPC and Barbara Pillsbury of the Asia Bureau (Ref. 1).

The Auditor General's representatives in 1972 visited 22 rural water systems which AID had assisted. Five were operating more or less as designed; six were operating "on a limited basis", and 11 were completely closed down (Ref. 1). Dworkin and Pillsbury in 1979 visited 52 systems of which "only seven were not functioning". The writers of both reports believe both these surveys accurately described the situation at the time the sur-

veys were made. With hindsight it is easy to understand their apparently contradictory findings.

The two AID surveys were made at different times in the cycle and observed different conditions. Rural piped water systems constructed with AID assistance have gone through a cycle and have started through the cycle a second time. Immediately after their construction they fulfilled their function effectively for a time. Then they deteriorated. After a further time many of them shut down altogether. The Rural Water Supply Division (RWSD) of the Ministry of Public Health (MOPH)saw the solution to an important problem facing these water systems, received funds from the government to renovate them and received agreement from the water system administrators to make certain changes. The Rural Water Supply Division then renovated the water systems, and they began to function properly again. About two years ago the Division lost its budget and mandate to supervise and assist small rural water systems. Deterioration of the systems has set in again, though it will not progress as rapidly as before. Deterioration of most of the systems will probably continue, and, if management does not improve, some of them will probably shut down every year.

## 2.4 The Need for Water Supply Improvement

The village people have and feel a considerable need for more water and for more convenient water. The NIDA report classified 78 villages of the 195 surveyed in the Northeast as having a severe shortage of water, where severe meant walking two kilometers or more for water or waiting more than two hours for two buckets of water. Fifty-eight villages were classified as having considerable shortage but not a severe one, and 59 villages had adequate water. This survey was made in the dry season. Water is of course much more available in the rainy season.

Our opinion is that even those villages classified as having adequate water probably did not have an adequate supply. Copious water conveniently supplied within a few yards of the house is necessary for personal and household cleanliness. Diseases due to poor personal hygiene such as trachoma, leprosy and skin diseases are reported to be an important public health problem in Thailand. Only a few exceptional households in fortunate villages have what we consider adequate quantities of convenient water even in the dry season.

The Ministry of Public Health lists annual morbidity from "water and food borne disease" as 26,600 per 100,000 population (Ref. 2). It also lists cholera, typhoid and acute diarrhea as

important problems. These diseases are caused by contamination with fecal material of food or drink, or other objects which are put in the mouth. Water is commonly a vehicle for such diseases.

In most villages in the dry season the only water sources not subject to fecal contamination are piped water from wells and tube wells equipped with hand pumps. (Village piped water supplies taken from surface water sources are generally now unsafe as the treatment works are not being operated correctly.) Unfortunately village people in general do not like to drink either piped water or tube well water if they have a choice. Village people commonly drink either surface water from ponds or streams, or water from shallow open, dug wells both of which must often be infectious in the villages. Of course in the rainy season village people will often drink rain water.

It is concluded that village people generally have a great need for better quality water, although most of them do not feel this need.

In the Rapid Assessment Report of 8 November, 1978 the National Economic and Social Development Administration (NESDB) estimated that in the whole of Thailand there were 22,108 villages with less than 500 people (1975 population), 21,658 villages with 500 to 2,000 people, and 1,757 villages and sanitary districts with 2,000 to 5,000 people. The total populations in these categories in 1975 were 6.3, 18.4, and 6.2 million respectively.

The Provincial Electricity Authority Rural Village Directory of September 1976 (quoted in the AIT report to NESDB: Water for the Northeast) stated that in 1976 there were 19,797 villages comprising 2,040,816 households in the Northeast. From these figures we deduce the following:

| | Villages (1976) | Households (1976) | Population (1976) |
|---|---|---|---|
| Villages less than 500 population - | 9,600 | 416,000 | 2,500,000 |
| Villages between 500 and 2,000 - | 9,400 | 1,215,000 | 7,300,000 |
| Villages over 2000 population | 800 | 483,000 | 2,900,000 |

Information from the Provincial Water Works Authority (PWWA) indicates that there are presently (a) 211 piped water systems in the Northeast, including 130 constructed under the Department of Health program, (b) 324 village piped water supplies in villages

throughout Thailand having a combined population of 866,400 and (c) 339 sanitary district water supplies in districts throughout Thailand with populations totaling 1,267,400. These figures indicate a total of 663 rural piped systems in areas having a total population of 2,133,700. Therefore, in the whole country perhaps 34 million rural people do not have piped water.

As indicated previously it is our view that villages without a piped water system are generally short of water, especially in the dry season. There is, of course, considerable difference in the water situation among villages. In some villages neither dug wells nor drilled wells give water. In other villages wells can be constructed but they give salty water. Even where water of good chemical quality is available from wells, the water drunk in the dry season will generally be unsafe. When rain water is not available usually the only safe source is from drilled wells, and water from these is, as a rule, considered by the users to be unsatisfactory for drinking. There is a therefore very great need both for more water and for better water in many villages of the Northeast.

Current programs offered by the Government (each limited to selected villages) are:

1) Continued service from the existing 211 piped water supply systems. Most of these have been turned over to the local authorities. Users pay approximately the cost of operation only.

2) Dug well protection, for which the Ministry of Public Health provides materials (not including materials for construction of well walls but including handpumps). This program has been in operation about 18 months on a very small scale. About 100 dug wells were provided with handpumps in the Northeast last year, and several hundred are planned for this year.

3) Provision of rainwater cisterns for which the Ministry of Public Health and provincial governments provide technical guidance and revolving funds to enable villagers to spread the construction cost over a period of one year. This is also a small program. About 500 households were assisted last year in the Northeast by the MOPH.

4) Well drilling and handpump installation programs of several agencies (including the Ministry of Public Health's Rural Water Supply Division, the Department of Mineral Resources (DMR), and the Office of Accelerated Rural Development (ARD)); these programs are

free of cost to the users. About 1,800 wells are drilled each year in the Northeast. Unfortunately water from these wells is generally high in iron and manganese and so considered unsuitable for drinking.

Other potential programs include a renewed piped water supply program (possibly incorporating different levels of service and design assumptions than those of current systems), provision of assistance with installation of small diameter drilled shallow wells with hand pumps, and expansion of one or more of the existing programs.

## 2.5 Constraints and Difficulties

The Royal Thai Government has been spending $20 million to $25 million annually to improve village water supplies with mixed results. From the previous reports we have studied, the interviews we have conducted (Appendix B), and our observations in the field (Appendix C), it is apparent that there are numerous constraints and difficulties which must be taken into account in the efforts to provide good water supplies to a substantial part of the population in the Northeast.

Technical constraints include:

- Shortage of surface water and lack of salinity-free groundwater in certain areas.
- Iron and manganese in almost all of the groundwater available in drilled wells in both shallow and deep aquifers. (Very shallow dug wells sometimes do not have these problems or, if they do, it is not troublesome as the iron precipitates in the open well).
- High turbidity, including colloidal clay, in most surface waters (streams and rivers).
- Lack of base-line data on water supply facilities and systems and their condition and on numbers of villages and residents with various levels of actual and perceived need for improved water supply.
- The short life of many water sources constructed in villages under government programs.
- The continued deterioration expected in small piped water systems due to poor maintenance.
- Low yields and short lives of individual wells constructed in the past for piped systems. (The extent

to which this may be due to well screen design and lack of development of wells is not clear.)

- The high cost per connection or per person served for water systems in small communities.

Socio-economic constraints include:

- Villagers' decided preference for drinking surface water, water from certain open shallow wells, or rainwater collected from roofs rather than piped water or water from drilled wells.

- Low economic status of villagers.

- Villagers' reluctance to attempt to maintain or repair facilities which they perceive as belonging to the Government.

Organizational difficulties include:

- Multiplicity of Central Government agencies (refer to Appendix D) and programs in the rural water supply field in Thailand and lack of coordination of their efforts.

- Separation of design/construction responsibility for piped water systems from responsibility for operation and use.

- Unwillingness or inability of operators, responsible to Village Committees or Sanitary Districts, to take advice or instruction from Central Government engineering personnel.

- Lack of staff and a clearly responsible agency to make regular visits to existing piped systems to monitor operation, maintenance, and administration.

- Lack of community motivation experience in the two Government agencies (Public Works Department and the Provincial Water Works Authority) which have most of the technical personnel with practical water supply experience; and a corresponding lack of water supply personnel in the Ministry of Public Health which has done the most work in small system design and community motivation related to health and sanitation; none of these agencies appears now to have a clear-cut mandate to provide or promote piped rural water supply.

- The actions of several departments of the government in providing and directly maintaining free handpumped and power pumped wells without user participation (except to request the well) and without system design or operational responsibility where the wells supply piped systems.

- The potential for each agency to do what it can do most easily and for the most heavily subsidized and least efficient programs to be most "popular" in terms of requests for help and so to undercut other programs involving community participation; this will lead to many of the greatest needs being passed over as being too difficult or nobody's responsibility.

## Chapter 3

## CONDITIONS OF EXISTING SANITARY LATRINES

### 3.1 Type Distribution and Cost of Latrines

Although the AID publication Thailand's Water Seal Privy Program (Ref. 3) was written in 1960 or 1961, the water seal latrine program began in Chiengmai not later than 1955. Before this program became popular very few village households had sanitary latrines.

The original "Chiengmai" latrine was a water-seal, pour-flush, direct-pit latrine. In the early days, the water seal bowl was invariably concrete and was cast into a concrete slab placed over the latrine pit. Originally the Ministry of Public Health manufactured the water seal slabs. Now both concrete water seal slabs and porcelain ones are sold in the markets of large towns. In Khon Kaen the ceramic models presently sell for ฿215 and concrete ones for ฿75. The MOPH buys the concrete latrine slabs in large quantity for ฿60. Often it is advisable to line the latrine pit to ensure that it does not collapse. A concrete slab with cast-in-place pour flush latrine bowl and three concrete rings for pit lining may be bought for ฿300 in Khorat. The latrine may therefore be completed for ฿500 to 600. The rings are 80 centimeters in diameter and each is 50 cm high. The pit may become full in two or three years when it may be emptied and then used again.

Some latrines seen were of the lateral pit type in which the pit is beside the latrine not under it. A lateral pit can be cleaned without disturbing the latrine building but must have a pit cover in addition to the latrine slab.

The Sanitation Division of the MOPH promotes the construction and installation of these sanitary latrines by providing technical assistance, some tools and up to a year's loan of the cost of the latrine, ฿500 or 600. As the money advanced is paid back, it is lent out again for the same purpose on a revolving fund basis.

In one demonstration village the number of water seal latrines had increased from 12 of households (11 percent) to 96 (90 percent) in less than four months. The bottleneck in such work was said to be the size of the revolving fund. During the same period three families had been assisted in building rainwater storage tanks of nine cubic meters capacity, bringing the number in the village to five. Only ฿5,000 were available in this village to provide capital for the two programs: latrines and rainwater cisterns.

The latrine superstructure is built just as the householder wants to build it. Using the estimates of the MOPH, for Region 4 of ฿600 total cash cost and assuming a four year life before any cash money must be paid (emptying after two years is assumed to cost the householder's labor only) and expenses of ฿200 on the fourth year and every four years thereafter, a latrine is estimated to cost ฿21 per capita per year, excluding householder's labor both for original construction and for maintenance.

The cash cost of a latrine to the government would be interest on the revolving fund and wear and tear on any tools loaned, which together should not exceed ฿2 per capita per year. This does not include salaries and expenses of the government for overseeing the program.

The Division of Sanitation appears quite competent in setting these water seal latrines installed and used. In the village where 11 percent of households with water seal latrines rose from 11 percent to 90 percent in four months flushing water must be carried a kilometer (whether this is round trip or one-way was not clear). A system has been developed to use the water first for washing and then for flushing the latrine.

These latrines are quite satisfactory for village use. To the extent they are correctly made and correctly used they will put human excreta underground where it cannot be contacted by flies, roaches, rats or other vectors. All the pits we saw appeared to have been constructed in soil or sub-soil and would be very unlikely to pollute ground water or wells. Latrine pits could pollute ground water if the were dug down into fractured rock which is not an effective filter. Considering the immediate advantages to sanitation and public health of putting human excreta into a pit out of contact with humans, considering also the slow travel of ground water from such pits (usually a few inches a day or less), and considering the quick clogging of pores or passages which occurs around latrine pits, a latrine program should be encouraged even if it were known that occasional pits would be dug down to fractured rock. Most latrine pits will be in soil or subsoil which are effective filters.

The Division of Sanitation of the MOPH estimates that throughout the nation as a whole about 43 percent of the households currently have sanitary latrines. According to the Rapid Assessment Report previously referred to, 38 percent of the population in 1975 had sanitary latrines but only 19 percent of the population in villages in the Northeast had them. Assuming comparable growth rates we infer that villages in the Northeast now have sanitary latrines in about 22 percent of their households.

The sanitary latrine program should be expanded and accelerated.

## 3.2 Biogas Generators

The Division of Sanitation is promoting the construction and use of biogas generators in villages. Costs are about ฿6,000 to ฿7,000 for a generator with movable steel gas holder, ฿3,000 to ฿4,000 for a generator with movable concrete and fiber glass (or ferroconcrete) gas holder and ฿2500 to ฿3000 for a generator with underground stationary concrete or brick gas holder. The costs of this program to the government are the expense of wear and tear on the tools loaned to builders, the revolving fund which finances the generators, and the salaries of supervisory staff.

Not everyone in a village can afford a biogas generator, and indeed if 20 percent of the households had one there might not be enough putrescible material to feed them. The generators accept human excrement, animal manure, kitchen scraps and any other putrescible material. Grass cuttings and straw are added when more gas is wanted. The effect on sanitation in the village must be considerable. There were fewer flies in the demonstration villages than in parts of Khon Kaen. This processing of the animal manure without breeding flies is especially good sanitation. The owners cook with the gas produced and use the digested material in the fields as fertilizer.

The program to stimulate the construction of biogas generators is an excellent program for improving village sanitation. It should be continued and expanded.

## Chapter 4

## NON-PIPED WATER SUPPLY OPTIONS

### 4.1 Important Factors

Certain factors peculiar to the area have great influence on village water supply in the Northeast. They include:

1. The alternating periods of rain and drought each approximately six-months-long.

2. The great difference among villages in the availability of water in the dry season.

3. The desire of most village people for more convenient and copious supplies of water, especially in the dry season.

4. The strong preferences of village people about the water they drink, based primarily on taste, and not on quality as scientifically defined.

### 4.2 Sanitary Considerations

Water supplies are hazardous to health in proportion to the number of people who may pollute them and, to a lesser extent, the number of animals.

Dug wells are subject to above-ground, surface, and below-ground pollution and to pollution native to the ground water. The first three are caused by defects of the well. The fourth is a quality of the ground water entering the well.

The most dangerous type of dug well pollution is surface pollution. The ground in the vicinity of a popular well is apt to be contaminated by the feet of people or animals visiting the well, by human and animal feces, or from bathing or washing which may occur in the vicinity. If waste water around the well can run back over the ground into the well, enormous numbers of bacteria will be carried into the well. Thus it may happen that all the people who come to the well may share their infections through the medium of the well water. If any one of them becomes infected with a common water borne disease, all may be exposed to the infection.

Below ground pollution enters the well not with surface water but with water seeping a short distance through the soil and

then through the wall of the well. Soil is an excellent purifier of water. Seepage through even two or three feet of soil will ordinarily remove biological pathogens.

Above ground or surface pollution can enter the open dug well with dust or on ropes and buckets. A well open to dust in the village would certainly show contamination in the usual laboratory test for coliforms. In a dusty area where either human or buffalo feces may have been deposited on the ground recently (within a week) deposited on the ground, an open well would be expected to show the presence of fecal coliforms (E.Coli) on laboratory examination. Nevertheless dust-borne pollution, though objectionable, would not be considered a significant public health hazard in the average Northeast village.

Above-ground pollution from buckets is somewhat dangerous and should be avoided or minimized though such pollution is very much less hazardous than surface pollution. The use of one bucket instead of many in a well will help. Paving and draining the area around the well so that buckets are set down on a relatively clean surface will help. The best solution, of course, is to fit a pump to the well so that one person drawing water does not add anything to the well which will infect the next person.

Dug wells should therefore be equipped with a pump, have a watertight well wall (say four feet under ground and six inches above), and have the area around it paved so that waste water will drain away from the well. Covering the well to make it airtight is not recommended in Thailand for two reasons. First, the public probably would want to be able to get into the well with a bucket in case the pump broke, and second, some dug wells will develop a taste and odor if tightly closed.

Drilled wells equipped with a handpump (if properly sealed at the top) are simply not subject to any of the first three kinds of pollution which may affect dug wells. Drilled wells are unavoidably subject to pollution if the native ground water entering the well is polluted, but, as mentioned in Chapter 3 above, this type of pollution is considered unlikely and insignificant generally for the Northeast.

Water carried by bucket from a good source to the home and stored there would probably show the presence of fecal coliforms upon laboratory examination. This pollution is considered insignificant under present conditions. Such pollution is apt to come from members of the family who will probably share infections through food or some other means if they do not share it through water. Continuing the same idea, one way to cut down on infections arising from open, polluted dug wells would be to

provide every household with a well. If each household had its own well, even though unsanitary, transmission of disease from one family to another through water would seldom occur.

Rainwater collected from roofs and stored in cisterns would also provide good water from the epidemiological or public health point of view, though it would not pass laboratory examination.

## 4.3 Cost of Non-Piped Water Supply Options

Estimates have been made of the annual costs of providing water in Northeast villages by five different non-piped options, all of which have been used in the Northeast:

Drilled wells - six inch diameter,
Drilled wells - two inch diameter, (sometimes called "tube wells")
Rain water cisterns,
Improving (making sanitary) dug wells, and
Construction of small ponds.

Table 4.1 shows the number of village households which may be served by various types of water supplies as estimated by National Economic and Social Development Administration (NESDB) and by NIDA. It also shows the number used in preparing the cost estimates in this report.

Table 4.2 shows estimated annual costs of providing water to villages by the five non-piped methods listed above. They include both construction and operating costs. They are calculated at a discount rate of 14 percent, as NESDB representatives informed us that rates from 12 to 16 percent would be appropriate.

It may be that a minimum of about 30 liters of water must be used daily per person to obtain the benefits to health through cleanliness which water can bring. The water in four of the five alternatives listed in Table 4.2 must be carried to the house, and it is doubtful people will carry such quantities. The rain water from cisterns need not be carried to the house, but cisterns supply only about eight liters per person per day in the dry season. Computations for the drilled wells are based on an estimate that people will carry 20 liters per capita per day (lcd) from the wells, that in effect 15 families use each well during the dry season, and that no one uses these wells during the wet season. It is presumed water from the drilled wells will have an iron or mineral taste, may give rice boiled in it an unpleasant odor and may stain clothes washed

TABLE 4.1 Households Estimated Served by Various Sources

| Sources | NESDB Estimate | NIDA Estimate | This Report |
|---|---|---|---|
| Drilled Wells | 50 | 40 | 15, dry season only |
| Dug Wells | 10 | 15 | 10, entire year |
| Shallow, small drilled wells | - | 25 | 15, dry season only |
| Ponds 2824 cubic meters | 80 | 30 | - |
| Ponds 10,000 cubic meters | 270 | 50 | - |
| Dredged Ponds or Swamps | 150 | 50 | - |
| Metal Cisterns for rain water 400 gallons | 6 | 6 | - |
| Piped Water Supplies | 460 | 125 | - |
| Reservoirs/Dikes | 80 | 50 | - |
| Concrete cisterns for rainwater 9 cubic meters | - | - | 1 |
| Ponds 1400 cubic meters | - | - | 30, dry season; 10 wet season |

TABLE 4.2

COST OF NON-PIPED OPTIONS

| | Cost per Cubic Meter | | | Annual Cost per Person Served | | | Remarks |
|---|---|---|---|---|---|---|---|
| | Gov't Budget | Cost to Users | Total Cost | Gov't Budget | Cost to Users | Total Cost | |
| Drilled Wells | 34 BT | 0 BT | 34 BT | 246 BT | 0 BT | 246 BT | Provides an additional source, but water is generally not drunk. |
| Shallow, Small Drilled Wells | 5.7 | 0 | 5.7 | 42 | 0 | 42 | Same |
| Repair of Shallow Dug Well | 0.6 | 1.1 | 1.7 | 8.0 | 4.1 | 12.1 | Provides no additional source but does away with bad source. Water is drunk. |
| Rain Water from Cisterns | 4 | 23 | 27 | 25 | 139 | 164 | Provides additional water. Water is drunk. |
| New Pond, with 3 Pumps, no Treatment | 34 | 2 | 36 | 63 | 3 | 66 | Provides additional water. Water is drunk but is inferior sanitary quality. |

Cost of Government Staff salaries and expenses excluded.

in it. Accordingly these wells will be used only when other water is not available.

For the improved dug wells equipped with hand pumps we have assumed use by ten families only and use throughout the year. Since the people like water from dug wells, a number of dug wells should be repaired in each village so that it will not be necessary for more than ten families to use each well.

The cistern cost estimates have been made on the basis that the amount of water equal to one full cistern will need to last six months, on the average, but that the cistern will be filled and emptied three times in the wet season. This is a per capita use of a little over eight liters per day in the dry season and 25 lcd in the wet season. This water could be supplied by about three quarters of the rain falling on a roof measuring ten meters by five meters during a season with one meter of rain. With larger tributary areas much more rain water could be collected if desired.

In some villages wells simply either do not supply water or supply only salty water. A pond may be the only non-piped option in such villages, and indeed a piped supply in such villages might also have a pond as its source. The pond has been assumed to be equipped with three handpumps located 15 meters from the edge of the pond. The pumps should make it convenient for the people and their animals to stay away from the pond and keep it somewhat less polluted during the dry season. The pond should not receive local surface drainage and should not receive any drainage during the dry season. Storage is recognized as a method of water purification, and such ponds should be preferable to unsanitary wells.

## 4.4 Water Treatment

No method of water treatment has been included in these estimates. It is believed that the village people are not ready to provide treatment for their water. No branch of the government, including the Department of Health, has yet shown that it is practical to get individual village families to treat their water.

Relatively simple treatment is available to remove iron and manganese from water from many, if not all, of the drilled wells. A number of such treatment plants have been built in the Northeast for wells equipped with handpumps.

These treatment works operate satisfactorily while government staff operate them. They generally can be made to operate

automatically except for backwashing the filter occasionally and arrangements are available to do this automatically. Mr. Charoin of the Department of Mineral Resources informed us that the village people not only will not operate such treatment works, but that they also ask that treatment be discontinued as it makes the handpump more difficult to operate. In addition, as was mentioned above, village people object to the taste of chlorine in the water.

## 4.5 Conclusions on Non-Piped Water Systems

All water from sources listed in Table 4.2, except cisterns, must be carried to the house. People do not like to carry as much water as is needed to improve general cleanliness and to decrease the incidence of the so called "water washed" diseases. In most cases, then, such sources of water can affect health only through the provision of safe, or more nearly safe, water in substitution for a potentionaly unsafe and hazardous source.

However, the provision of any additional source of water may markedly cut down on the time and labor expended in carrying water.

Drilled wells are not recommended if other sources are available. Villagers as a rule do not like the water and it is not used when other sources are available. Of course even bad tasting water from a drilled well will be very welcome if there is no other source near by. In the wet season there are other sources available and the drilled wells are little used.

The same applies to small drilled "tube" wells which are simply smaller in diameter, shallower, and cheaper drilled wells. They often have a short life.

The provision of pumps on existing dug wells is recommended, especially those wells used for drinking. Improvement of dug wells will markedly improve the quality of water drunk in the village. This improvement not only provides safe water, by village standards, but it also does away with a polluted, unsafe source much used by village people. The cost estimates allow for 1-1/2 meters depth of concrete lining of well walls which is not now part of the MOPH program.

The cisterns will provide a good (by village standards) quality water for drinking in the dry season. In the wet season they should provide convenient sources of water for drinking and other purposes and will often improve cleanliness as well.

The quality of water which would be provided by the construction of new ponds is uncertain. It is assumed that providing three pumps or dug wells should be sufficient to keep people away from ponds. Of course they must accept no surface drainage in the dry season. Animals, including ducks, must be kept out of them.

In summary, for villages which are not to be provided with piped water it is recommended that:

A. Cistern construction in homes be promoted by the "revolving fund" loan method in all villages. A subsidy equal to that which the government would pay for the construction of a piped water system should be considered for low-income families.

B. In villages having dug wells which are used for drinking water, all such wells should be improved by the construction of watertight walls to a depth of at least four feet below ground and a half foot above ground and by equipping such wells with a pump. This work should be done as part of a self-help program where the people pay for part of the work and maintain the pump.

C. Experimental or development projects be undertaken to:

(1) Have village people operate systems for removing iron and manganese from drilled wells equipped with hand pumps. Relatively cheap simple systems have been designed and built in Thailand and have been operated successfully by government employees. Apparently the village people do not like these systems enough to tolerate them, let alone operate them. These experiments should be undertaken in villages having no dug wells used for drinking purposes and should be undertaken by an agency competent to arrange public participation in the experiment. Considering the shortage of good water in villages, the number of wells providing safe water but tasting of iron, and the ease of removing this iron there should be a place for such systems in some Thai villages.

(2) Operate "reserve" or protected ponds to supply water for drinking and domestic purposes. Many obvious improvements can be made to such ponds and water is obtained from them. Experiments should be undertaken to develop methods acceptable to the village people for improving the quality of the water.

(3) Develop methods of obtaining safe water from open ponds. The people have observed that wells beside

ponds are often more reliable sources than other wells. Unfortunately the yield of such wells is often small, and sometimes wells dug beside ponds give no water.

Three avenues of experiment are proposed:

(a) Finding permeable layers beside ponds which will give water to wells.

(b) Building infiltration trenches (artificial horizontal wells) beside ponds.

(c) Building infiltration galleries inside ponds. Such galleries will certainly give water in large quantities for a time. The question is how soon they will clog or how readily they can be unclogged. A soil scientist or seepage expert should participate in this experiment.

## Chapter 5

## PIPED WATER SUPPLY OPTIONS

### 5.1 Factors Affecting Piped Water Supply Technology and Cost

From the studies of others and from our own observations we conclude that when piped water supplies are provided to village people, they will not necessarily give up their other sources of drinking water. However, where the expense of providing piped water supply can be justified, we believe that any such supplies provided should be safe since, even if they are not the primary source of drinking water, they will almost certainly be used to some extent for drinking by at least some of the people.

Discussions with staff of the Rural Water Supply Division of the Ministry of Public Health together with our own field observation have convinced us that existing village water treatment plants are generally not properly operated. In most cases alum and chlorine are not used which means that rapid sand filter plants treating surface water are providing little effective treatment. In other cases we saw pumps which either were not operating or else were producing less water than when new. We believe that it is therefore necessary to select surface water treatment processes that are less dependent on the use of chemicals and to establish management systems which will ensure reasonably competent plant and system operation and maintenance.

From our discussions with PWWA, PWD and MOPH, it is clear that there are knowledgeable and experienced water supply engineers in all three agencies competent to establish rural piped water supply system design criteria. Their availability to work on any new program of rural piped water supply development is, however, uncertain. Each new system constructed will involve a considerable amount of investigative, design, construction supervision and operations assistance work. It is unlikely that staff current can perform this new work without neglecting their present duties.

To permit economical design of source, treatment, storage, and distribution facilities, it is essential that wastage of water from piped systems be controlled. Without such controls, a few users in favored locations (closest to the treatment plant or at the lowest elevations) will withdraw much more water than they need at the expense of other consumers. We were informed by senior MOPH regional staff that the original AID-funded piped systems were installed without any such control system.

As was revealed by the 1972 evaluation by the AID Auditor General, many of them failed. MOPH engineers indicated that the systems were put back into operating and useful condition by the MOPH on condition that each local authority agree to the installation of meters and to collect user fees to cover the operating costs. As discussed in the following section on water distribution, metering has its own problems and is not the only way to control wastage. Whatever system is used will require monitoring and effective management.

The most convenient and reliable power source for pumping is electricity. Power can be generated by diesel engine generators or pumps can be driven directly by diesel engines. However, diesel engines introduce an additional cost and potential for failure. In 1978, 81 percent of the rural areas of the Northeast had electricity but only 16 percent of the population. Villages in the Northeast are continuing to become electrified. In 1979 the Governor of the Provincial Electricity Authority stated that any village where a water supply was to be constructed in the Northeast could be electrified with less than a year's notice. Estimates have therefore been made in this report on the basis of electric power being available.

## 5.2 Private Versus Public Outlets

Supplies from piped distribution systems can be provided to individual houses or to public standposts.

It is preferable from a public health point of view to provide water at each house, in the house or at an individual outlet in the yard adjacent to the house. This provides water conveniently so that washing and cleanliness are easy and diseases spread by uncleanliness are thereby discouraged. It is more expensive to provide water at each house than to provide water for a number of houses at one public standpost.

It is prohibitively expensive to provide water to continuously flowing outlets, public or private.

The control of wastage at public standposts is difficult. Several types of automatically closing valves have been designed and tested in various countries but none has proved able to withstand the tampering of ingenious people with plenty of time on their hands.

Restriction of the rate of flow at public outlets has been tried. Restriction to a level that would not waste too much water, and would permit continuous operation of the public outlet, will merely cause inconvenience and tend to drive the potential consumers to other, less safe, sources of water.

Wastage of water at public standposts can be prevented, though not easily, by an adequate monitoring and management system, but the supply of free water at public standposts under any condition will tend to undercut economically the piping of water directly to houses. If all, or substantially all, of the customers elect to take the free stand-pipe service, no-one will be left to pay the cost of the system. Also, a combination of private and public outlets makes it difficult to estimate beforehand the proportion of residents to be served directly and hence the per capita demand and system capacity to be provided.

Because of the natural economic tendency of the bad to drive out the good, we are of the opinion that the MOPH was absolutely correct in insisting that, to qualify for subsidized system rehabilitation, all connections to piped systems must be metered and free public outlets must be eliminated. The economic validity of that philosophy was demonstrated by the revitalization observed by Dworken and Pillsbury and reported in the May 1980 AID Impact Evaluation Report.

That philosophy, however valid economically, does not deal adequately with the problem of providing potable water to households lacking the economic capability to connect directly to piped systems.

In some areas in developing countries, the sale of water to those who do not have water in their houses is done under controlled conditions from metered connections with payment for each container filled and carried away. This system has the advantage of flexibility without undue wastage of water. In this system the poorer people must pay for their water but the price paid depends on the actual economic, water supply and other applicable conditions. Where there is no alternative water supply available it could create an economic burden. However, except possibly in salt areas, this is not likely to occur in Northeast Thailand.

Another method of selling water is that observed in such cities as Surabaya in Indonesia. Approved customers connected to the water system ("vendors") pay a special (higher) metered rate in order to be permitted to re-sell water. Their customers are nearby residents and owners of mobile tanks or carts ("carriers") who pay for the water and again re-sell it to persons living a considerable distance from the piped system. This method results in a relatively high cost per cubic meter to the ultimate user but the per user and per household costs are obviously acceptable. It is financially efficient as long as the meters are maintained and read and the necessary system revenues are collected.

While we recommend an integrated approach to the provision of water supplies to each village which meets the needs of both the affluent and the poor we caution against any combination of private metered connections and free public outlets in any given community. Each piped system should be either fully direct-connected or entirely based on standposts. Resale of metered water should not be discouraged.

This will enable each piped system to be supported by the users with fees based on volume or, if standposts are provided or the Barangay system discussed below is adopted, on property value, floor area or a flat rate. We suggest leaving open the possibility of standpost-only piped systems primarily for salt areas where water may need to be piped in even for communities lacking the economic capability to pay for conventional piped systems.

## 5.3 Quantity of Water from Piped Systems

Water consumption per capita varies widely in Thailand. In major cities it generally exceeds 250 lcd. This figure includes both metered and unaccounted for water. Few if any village systems have master meters so actual consumption from piped systems in villages is not known. It will tend to be higher in those systems in which flat rates tend to be used than in those where meters are maintained, read and actually used for billing purposes. Consumption also depends on the alternative sources available and on the rate charged per cubic meter.

Information given to us in two metered villages that we visited implied that per capita consumption was in the range of 50 to 60 lcd. In other cases usage was limited by the reduced capacity of wells and/or pumping equipment.

The literature on experience elsewhere has limited value compared with measurements specific to the community to be served under similar socio-economic, cultural, climatic and other conditions. For general guidance, however, they serve as a frame of reference. For rural piped systems with a single faucet at each house the consumption rate is generally in the range 30-100 lcd and frequently between 40 and 60 lcd (Refs. 4, 5, 6 and 7).

Use by persons carrying water from public standposts generally ranges from two to 25 lcd but system design is often required to provide for 40 lcd including wastage at the standposts (Refs. 5, 7, and 8). We believe that people in Northeast villages will carry up to about 20 lcd away from standposts and suggest that wastage at such standposts should not be tolerated.

In the cost comparisions which follow, we have adopted a planning-level design consumption of 60 lcd for conventional and Barangay systems. We have also tested the sensitivity of many of the costs to the use of 45 lcd for systems with metered individual house connections. We have also adopted planning level design consumptions of 20 lcd for public standposts and for water resold from metered private connections. For systems with shared connections to individual houses, we have assumed that one metered connection will be used at a rate of 60 lcd and will provide water indirectly to three nearby houses at which the consumption is 20 lcd or a total for the four houses of 120 lcd. Average consumption in the shared system is therefore 30 lcd.

## 5.4 Barangay and Conventional Systems of Water Distribution

Any system of distributing piped water in villages must provide means for inducing people not to waste water and means to assess and collect charges for water used.

For systems with water piped to each house, conventional practice is to connect the tap directly to the main (through a meter) by means of a service connection. The meter is then the means of inducing conservation of water and of assessing charges. For a single family house, the connection is usually of 1/2-inch nominal diameter. The peak flow rate in the service connection is many times the average demand of the house, and the peak flow rate in mains serving populations of several hundred is likely to be about six times the average flow (equivalent to say 15 liters/cap/hour for a design water demand of 60 lcd).

A different system is being tested in the Philippines in the USAID-assisted Barangay Water Program. This provides for storage of about 100 liters of water at each house at about upper floor level as is illustrated in Figure 3. The tap draws from the storage tank, which is filled through a simple float valve. The service connection is only 3/8-inch nominal diameter; in addition it contains a specially made restricter which limits the flow to an individual house to about 23 liters/hour or 0.1 gallons per minute. For a family of six, this will provide an average of 45 lcd during a 12 hour period or 60 lcd during a 16 hour period each day with no net withdrawal of water in storage at the house. Even if the family leaves its tap open for 24 hours per day (and if the system headworks are operated 24 hours per day) the withdrawal will still be limited, without any need for individual metering, to about 90 lcd for a six-person family. In general, we believe leaving the tap open is not likely to happen because of the inconvenience caused by

FIGURE 3 – BARANGAY SYSTEM SERVICE DETAIL.

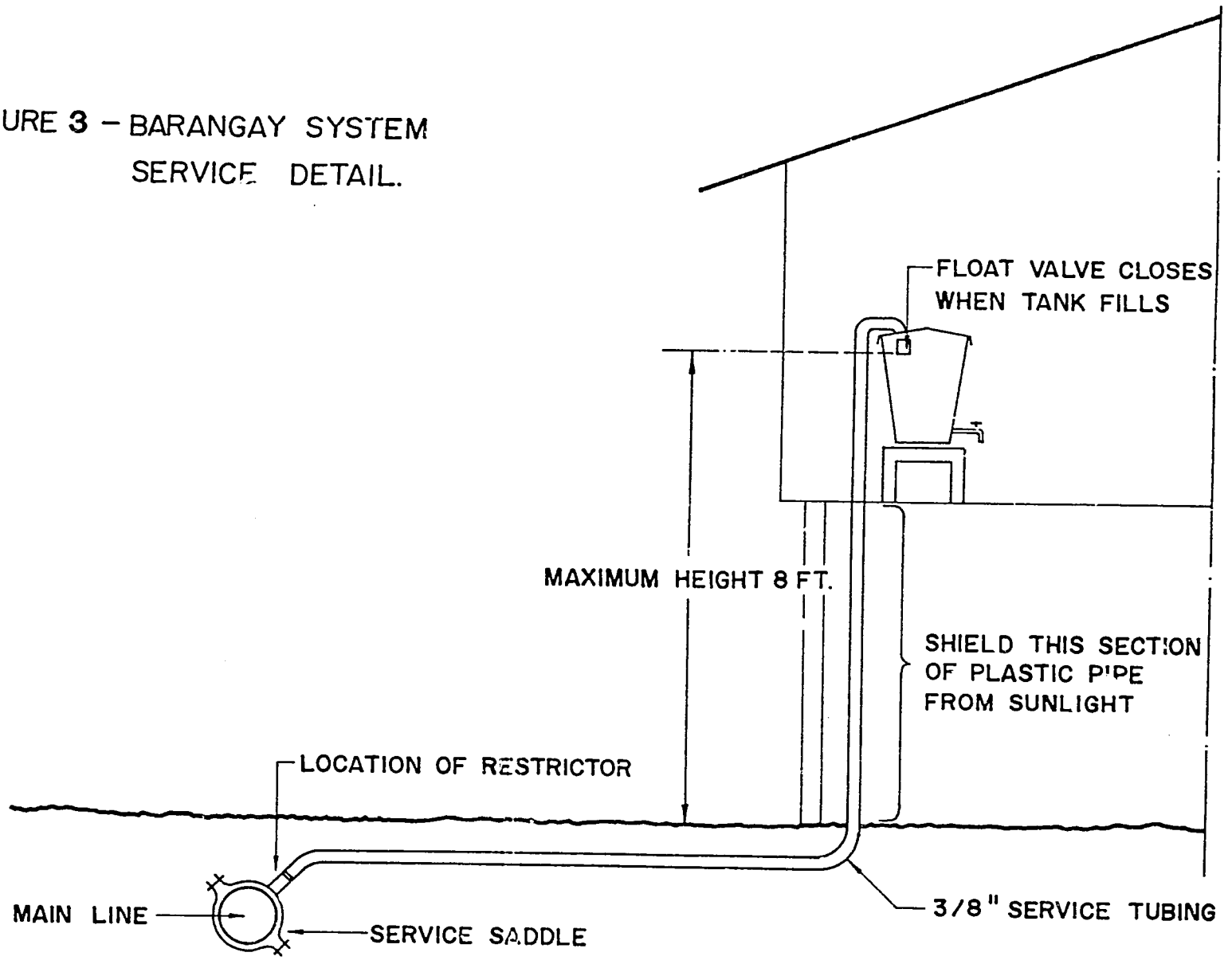


METROPOLITAN ENGINEERING CONSULTANTS

letting a storage tank drain empty and thus limiting the withdrawal rate to 0.4 liter/minute compared with say eight liters/minute normally expected from a tap. Users can assure themselves of being able to draw at the higher rate only by closing the tap when not actually drawing water.

The work of reading meters, calculating and collecting fees and maintaining meters, all essential to the conventional system, is not necessary in the Barangay system.

The system described above is referred to as System III-A in the design procedures established for the Barangay Project (Ref. 8).

Even with provision for all users drawing simultaneously at the full rate of 90 lcd, the distribution system design flow is less than four liters/capita/hour for populations of 750, and less than three liters/capita/hour for a population of 2,000 (compared with about 15 liters/capita/hour for the conventional metered system). In addition, we expect that because of the lower water pressure at the tap actual average consumption with the Barangay system will probably be less than with a conventional metered system. However, for simplicity our cost comparisons assume that equal total daily amounts of water must be treated and supplied to the elevated storage tanks for both conventional and Barangay systems.

With the assistance of Metropolitan Engineering Consultants we prepared sample distribution pipe layouts and corresponding cost estimates. We had noted during our field visits that average spacing between houses varied widely from one village to another. This factor has a profound impact on the cost of piped distribution systems. It appeared to us that a range of nine to 18 meters of distribution piping per house covered most cases so we evaluated distribution costs at these two densities and for total populations of 750 and 2,000. We checked the costs of the following options:

A. Conventional System with every house connected and metered.

B. Barangay III A system

C. Shared connection system with every fourth house connected and metered (and to re-sell water to their neighbors).

D. System with public standposts (one for every 60 persons).

The results are presented in Table 5.1 which shows the large effect on cost of reducing the number of outlets. The public standpost systems also use less pipe for distribution which is especially significant for smaller systems. The Barangay system costs include a 100 liter PVC storage tank in each house. The shared connection system is based on provision of a metered connection to one house in four and an average daily per capita water use of 60 liters in the connected house and 20 liters in each of its three neighboring houses.

## 5.5 System Storage

Both conventional and Barangay systems (and as well as all other piped systems serving standposts), required elevated storage in order to equalize the rate of withdrawal of water from the system.

The volume of equalizing storage required in conventional systems is generally taken to be about 15 percent of the maximum day flow or, say, 20 percent of average flow. We propose that no additional storage be provided for fire-fighting or for power outages. The storage volume required will therefore be 10 cubuic meters for design populations up to 750, 20 cubic meters for design populations up to 1,500 and 30 cubic meters for design populations over 1,500.

For the Barangay Water Program the volume provided is four to six cubic meters per 1,000 persons, say five cubic meters up to 1,000 population and 10 cubic meters for 1,000 to 2,000 population.

The storage tank can be located near the headworks, as was the case in all rural systems we visited in Thailand. Where this is done, the total flow is pumped up to the storage tank and flows out again by gravity. An alternative is to locate the elevated tank centrally in the community so that it will be filling or emptying according to the relative rates of flow into and withdrawal from the distribution system.

Except where the terrain dictates otherwise, we favor location of the tank close to the treatment plant because it simplifies control of the raw water and treated water pumps on the basis of water level in the elevated tank. Hydraulic efficiency requires the tank to be close to the village. This means that the whole plant should generally be located as close as possible to the community.

Pumping and storage costs depend, among other things, on the hydraulic head to be maintained in the system. We suggest that

TABLE 5.1

SUMMARY OF DISTRIBUTION COSTS
IN BAHTS
(฿20 = approximately US$1.00)

(Excluding Administration, Engineering, Contractor Profit and Overhead, and Contingencies)

| | | | | |
|---|---|---|---|---|
| Population | 750 | 750 | 2,000 | 2,000 |
| Dist'n Piping per House (m) | 9 | 18 | 9 | 18 |
| Construction Cost per Capita (฿) | | | | |
| A) Conventional System | | | | |
| Labor | 116 | 199 | 118 | 205 |
| Materials | 224 | 278 | 245 | 277 |
| Total | 345 | 477 | 363 | 482 |
| B) Barangay System | | | | |
| Labor | 102 | 160 | 103 | 177 |
| Materials | 142 | 167 | 151 | 185 |
| Total | 244 | 327 | 254 | 362 |
| C) Shared Connections | | | | |
| Labor | 86 | 163 | 88 | 170 |
| Materials | 97 | 146 | 106 | 167 |
| Total | 183 | 309 | 194 | 337 |
| D) Public Standposts | | | | |
| Labor | 66 | 152 | 81 | 166 |
| Materials | 50 | 90 | 70 | 128 |
| Total | 116 | 242 | 151 | 294 |

lower design heads be used than have been used in the past. For water to be delivered through a Barangay or conventional system in a level village in which the system storage tank is no more than 1.5 kilometers from the farthest house to be served, the lowest water level in the tank can be about 7.5 meters above ground.

The reinforced concrete tanks currently in use are much more durable than the multiple 1.5 cubic meters galvanized steel tanks on wooden stands previously used. However, they are expensive. We propose that the use of ferro-concrete or wood stave tanks on wooden stands be considered. Experimental work has been successfully done at the Asian Institute of Technology on ferro-concrete (hand applied concrete over light steel reinforcement) for water storage. Wood stave tanks can be made by local carpenters and are widely used where suitable timber is available, as in Thailand. A standard 10 cubic meter tank could be used as illustrated in Figure 4. Where necessary two or more tanks can be placed on the one stand. Of course, the exposed steel bands must be painted for rust protection. Wood stave tanks require more maintenance than concrete tanks but should have a useful life of 20 years.

The cost of the tank and stand illustrated in Figure 4 is estimated to be ฿78,000. A comparable 20 cubic meter unit would cost about ฿112,000. This can be compared with the ฿376,000 (materials 310,000, labor 66,000) cost of a 30 cubic meter reinforced concrete tank (which includes the cost of the extra seven to 10 meters of height provided in that tank).

## 5.6 Sources and Relationship to Treatment

Potential water sources for piped systems include:

- Deep wells
- Rivers and streams
- Lakes and protected ponds
- Unprotected ponds

We understand that groundwater is available throughout most of the Northeast although in some areas it is salty.

A well 200 to 250 feet deep costs ฿200,000 to ฿250,000 plus ฿50,000 for the pump and motor.

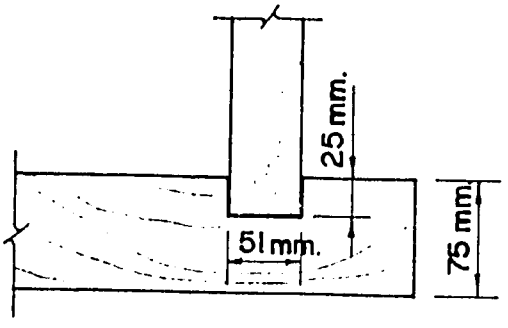


SECTION A-A

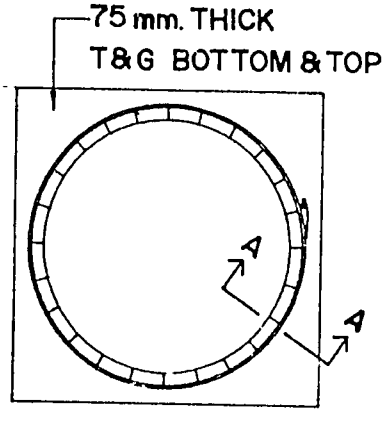


CROSS SECTION

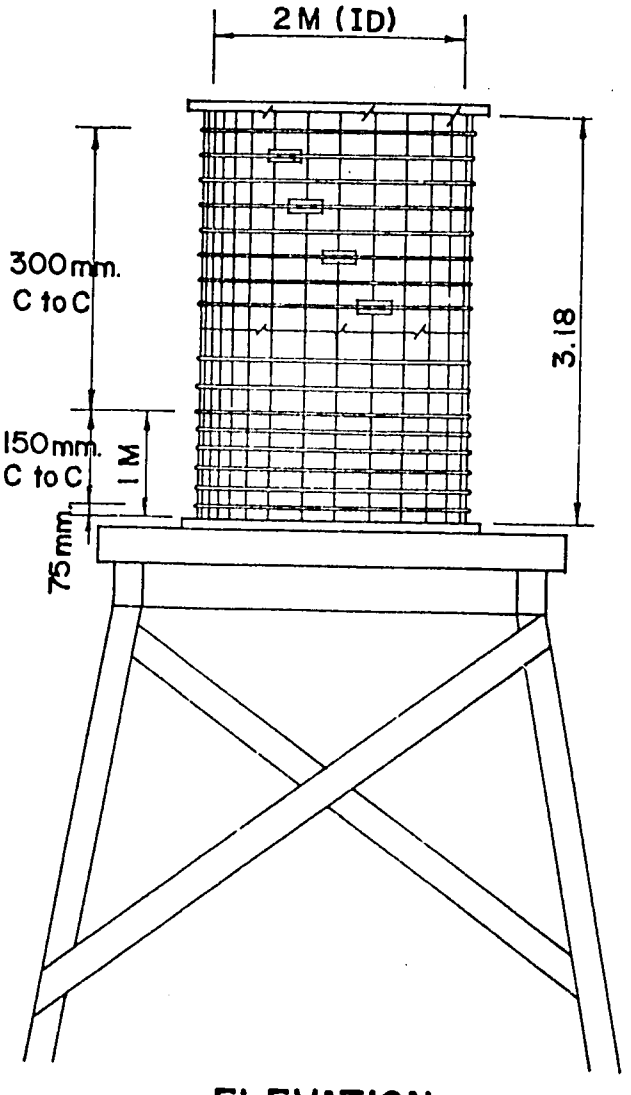


ELEVATION

EMPTY TANK WGT. = 750± Kg.

FULL TANK = 10750± Kg.

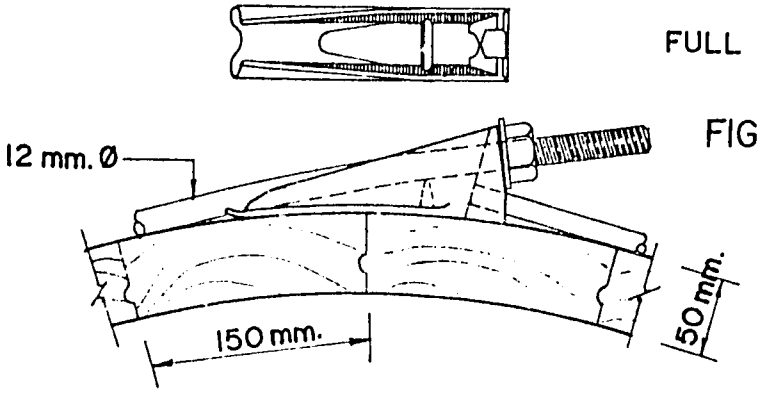


DETAIL OF STAVE, STEEL BAND AND MALLEABLE IRON SHOE

FIGURE 4 – WOOD STAVE TANK CAPACITY 10 CU.M.

METROPOLITAN ENGINEERING CONSULTANTS

Ground water in the Northeast almost always contains iron. Analyses seen by us at the MOPH Sanitation Division Regional Office in Khorat showed high iron and even higher manganese levels. Deep wells in the Northeast do not always yield enough water for piped systems and sometimes have a short life. In addition, pumping costs are higher for ground water as it must be lifted farther. Under this combination of conditions, groundwater will, since it requires treatment, be very little cheaper than surface water. Successful use of groundwater will require careful well location, design and development, and provision for well rehabilitation from time to time as needed. We understand that the iron and maganese are in general easily removed by aeration and filtration. In some cases addition of lime or an oxidizing agent such as chlorine may be necessary followed by sedimentation before filtration.

River and stream sources are available throughout much of the Northeast. We visited several systems with river-bank diesel or electric pump stations drawing from submerged pipe intakes in rivers and two floating intakes with electric motor driven pumps. Water from surface sources always requires treatment. These designs were satisfactory. We believe that consideration should be given to the use of submersible pumps in intakes where this will simplify intake construction and yet give protection against flood damage.

To reduce the adverse effects of possible improper operation we propose that treatment be by plain sedimentation (with provision for alum addition to assist sedimentation if and when necessary), slow sand filtration and chlorination.

There are certain areas where there are no year-around surface sources and where ground water is saline. In such areas, the most feasible sources will in many cases be man-made ponds to collect and retain surface runoff in the wet season. It may be necessary to restrict the use of man-made pond sources to standpost systems in order to limit the volume of water withdrawn. One such source may serve several villages. In Tambon Say Or, near Khorat, we saw a new surface water reservoir of approximately 50,000 cubic meters capacity which been constructed by the Office of Accelerated Rural Development ARD at a cost of ฿1,000,000.

If this were required to supply water through the dry season of say six months at a rate of 60 lcd, it would be adequate for a population of about 3,400 after allowing for evaporation and seepage. However, if the demand could be limited to 20 lcd (say by use of standpost systems monitored to prevent wastage at the standposts), it would be able to serve about 10,000 people. In this case the per capita construction cost of the reservoir source would be about ฿100.

In order to protect the banks against damage and to maintain the quality of the water such man-made ponds should be protected against entry by people and animals. If this is done, the water can be treated by slow sand filtration and chlorination without preliminary plain sedimentation or use of alum. This is also true of supplies taken from existing large lakes.

Pond and lake intakes, like river intakes, will generally require pumps, which can be bank-mounted or floating. In order to prevent damage to electrical parts by rising flood water, we suggest consideration of the use of submersible pumps where necessary.

In some cases unprotected ponds, such as fish ponds, may provide a convenient source of water. Those may have a fairly high algal content and may at times have high turbidity and high bacterial content. If the intake can be located away from the bank of the pond (for example, a floating-weir or mid-depth intake near the center of the pond) the water withdrawn may be low enough in turbidity and algal content that it can be put directly onto slow sand filters. We understand that there are cases where fish pond water can be extracted from nearby shallow wells, presumably after traveling through old stream bed alluvium. Such a case seems unlikely to be typical, since it suggests a rather leaky fish pond, but may give the opportunity to withdraw water already effectively filtered and requiring only chlorination.

## 5.7 Water Treatment

The capacity required in a water treatment plant depends on:

- Per capita average demand (including wastage at the faucet).
- Maximum day demand in relation to average demand.
- Design population (present population to be served plus provision for future growth).
- Provision for losses (filter backwash water, leakage).
- Free or additional water to be provided to public buildings or specially favored persons.

---

*The village of Nong Bua-Lum Poo has been quoted as an example, but we did not visit it.

- The number of hours per day the plant will operate.

Most of the above elements are determined by the level of service chosen by the designs. The daily hours of operation, however, are a matter of the operator's choice.

Each system visited, where we were able to determine the operating hours, was operated only during the day. Although every water treatment plant needs operation and maintenance, small plants do not need full-time attention whenever they are operating. The raw water and treated water pumps can very simply be automatically controlled to shut off when the overhead treated water tank is full. Therefore we propose to minimize the fixed costs of treatment by planning for 16 hours operation per day. This leaves a margin for minor breakdown and repair.

The selection of allowances for future growth and for supplies to special customers will be a matter for decision at the time of detailed design of each system. For the purposes of this report we have assumed a factor of 1.25 to cover these items. We take maximum day demand to be 1.2 times average day demand, so deriving the following planning-level plant capacities:

| Population Served | 2,000 | 1,500 | 1,000 | 750 | 500 |
|---|---|---|---|---|---|
| Plant capacity (cu m/hr): | | | | | |
| Conventional and Barangay | 12 | 8.5 | 6 | 4.5 | 3 |
| Shared Connection | 6 | 4.5 | 3 | 2.5 | 1.5 |
| Standpost | 4.5 | 3 | 2 | 1.5 | 1 |

The TAMS designs were prepared in the mid 1960's to supply 10, 20, and higher multiples of 10 cubic meters/hour, as was appropriate for the sizes of the communities addressed by the AID-funded Potable Water Project. Their smallest plants are therefore relevant only for the upper limit of population of villages. In addition, the TAMS designs have been subsequently improved by Thai Government staff in the light of lessons learned in actual operation as they continued with the installation of new plants based on the general principles of the TAMS designs.

We suggest that slow sand filtration (which has been used by the MOPH on lake supplies), preceded by long-term plain sedimentation with provision for alum dosage as necessary is more appropriate than rapid sand filtration for surface supplies. It will not do away with the need for operation and maintenance, but it makes the potential health consequences of fail-

ure less serious. In addition, the heavy two-level reinforced concrete structures in the existing plants are, we believe, unnecessarily expensive where land is available for simpler construction.

For these reasons, we have developed new typical outline designs for surface water treatment plants. Designs for these, plus a simple aeration/filtration iron removal plant designed by engineers of the MOPH and given to us by PWWA, have been priced for us by Metropolitan Engineering Consultants Co., Ltd. Outline drawings showing a six cubic meters/hour slow sand filter plant constructed with earth banks with hand placed ferro-concrete lining, and the 10 cubic meters/hour MOPH iron removal plant, are presented as Figures 5 and 6.

For slow sand filters, we believe there is a great potential in the use of charred rice husks instead of sand as the filter medium. We saw one such plant operating. Not only are the husks almost cost free, they are likely to be much more effective than sand in removal of certain contaminants. A great deal of work has been done on rice husk filtration at the Asian Institute of Technology.

Because of water source variability, we recommend that pilot studies be conducted before design of full scale filter plants for each new surface water source.

In all the following cost estimates we have, for convenience, included the cost of the raw water pumps in the treatment plant costs (since the capacities are the same) and have also included a nominal sum to cover the raw water intake and delivery piping (not knowing what the intake conditions or distances to the treatment plant sites will be).

We made construction cost comparisons of plain sedimentation and slow sand filter plants built with rectangular reinforced concrete tanks (at ground level, using the same basic layout as shown in Figure 4). These showed a cost advantage in favor of the sloping earth wall design of 13.5 percent at six cubic meters/hour capacity. At three cubic meters/hour, the costs are equal for the two methods of construction and at smaller capacities the rectangular style is cheaper. Adopting the vertical wall style below three cubic meters/hour and the sloping wall style above that size, we developed exponential formulae relating labor and materials costs to plant capacity. We also developed such 1981 cost estimates for the range of plant capacities tabulated against served population at the beginning of this section. In addition, developed in this manner an estimate of the cost of construction of a 10 cubic meters/hour plant for comparison with the estimated present day cost of a 10 cubic meters/hour TAMS-style rapid sand filter plant.

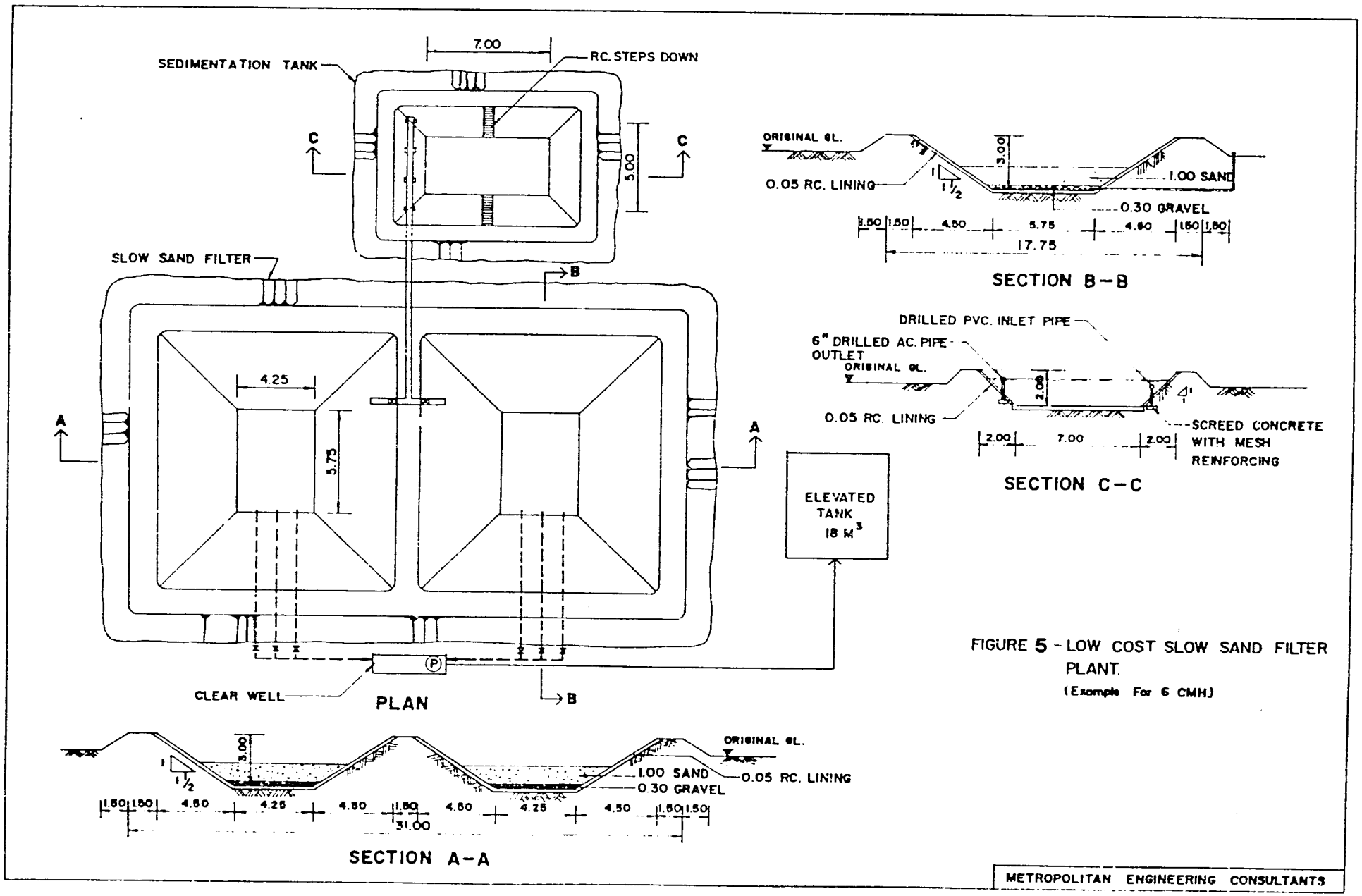


FIGURE 5 - LOW COST SLOW SAND FILTER PLANT.
(Example For 6 CMH)

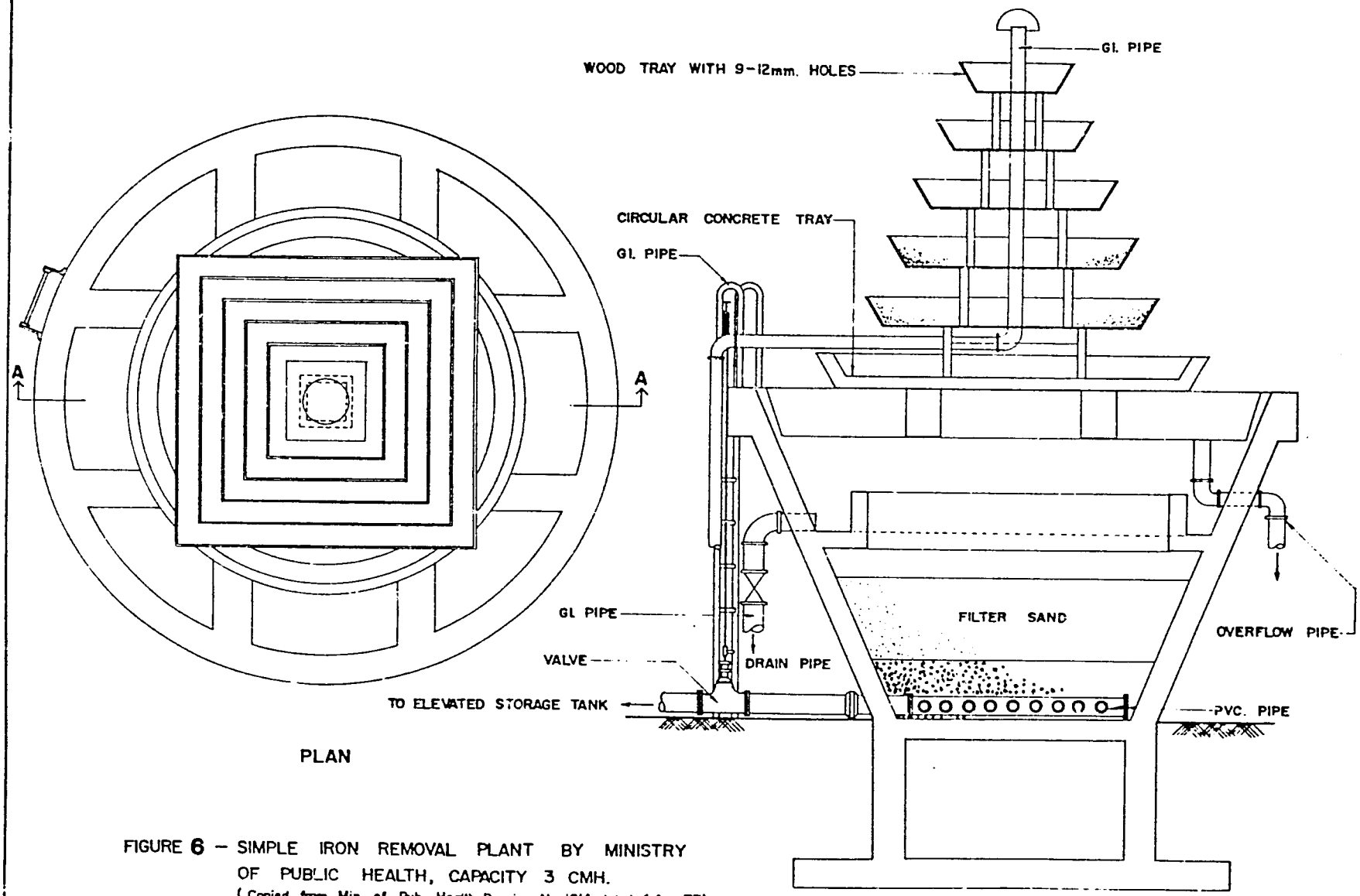


FIGURE 6 – SIMPLE IRON REMOVAL PLANT BY MINISTRY OF PUBLIC HEALTH, CAPACITY 3 CMH.
(Copied from Min. of Pub. Health Drawing No 1014 dated 4 Aug. 77)

METROPOLITAN ENGINEERING CONSULTANTS

The results of this comparision (in thousands of Baht) are:

| | Materials | Labor | Total |
|---|---|---|---|
| Rapid sand filter plant (10 cu m/hr) | 505 | 125 | 630 |
| Slow sand filter plant (10 cu m/hr) | 359 | 131 | 490 |

The slow sand filter plant requires more land (about 550 square meters for 10 cubic meters per hour capacity) than the rapid sand filter plant both because of its nature and because of the method of construction that we propose.

We have also estimated the cost of the 10 cubic meters/hour simplified iron removal plant (using aeration and direct rapid sand filtration) developed by the MOPH and given to us by PWWA. Using a similar exponential cost capacity relationship to that developed for the slow sand filter plants, we have also estimated approximate costs at other capacities.

We also estimated operating costs, on the following assumption:

- Treatment costs include the power costs of pumping of both raw and treated water with a total lift of 20 meters for surface water and 45 m for groundwater.
- Each plant will have one full-time operator whose time is charged fully against the treatment plant whether or not he has other duties.

On these bases, and assuming a 25-year plant life and a 14 percent annual discounting rate, the costs in Table 5.2 were developed.

The figures in Table 5.2 are based on the use of sand as the filter medium. Use of burnt rice husks would reduce the cost of construction by about 10 to 15 percent.

They are also based on the use of electric power. We understand that the Provincial Electric Authority has indicated that, given sufficient advance notice, it will give serious consideration to providing electricity to villages to be provided with piped water supply systems. This will undoubtedly require two-way coordination. It is likely that some systems will require either diesel operated pumps or diesel generating equipment to power submersible pumps. This will involve a relatively minor added capital and operating cost.

TABLE 5.2

WATER TREATMENT PLANT CONSTRUCTION AND OPERATING COSTS

| | | CAPITAL COSTS | | | | OPERATION AND MAINTENANCE | | | TOTAL ANNUAL COST BT (000) | COST PER CU M BT |
|---|---|---|---|---|---|---|---|---|---|---|
| | | MATERIALS BT (000) | ANNUAL MATERIALS BT (000) | TOTAL BT (000) | ANNUAL TOTAL BT(000) | CHEMICALS, MISC. BT (000) | LABOR BT (000) | TOTAL BT (000) | | |
| Surface Water Treatment | | | | | | | | | | |
| Cu. M. per hour | Cu. M. per year | | | | | | | | | |
| 1.5 | 7,300 | 191.1 | 27.8 | 230.2 | 33.5 | 5.8 | 22 | 27.8 | 61.3 | 8.4 |
| 2.5 | 12,200 | 243.4 | 35.4 | 298.7 | 43.5 | 9.3 | 22 | 31.3 | 74.8 | 6.1 |
| 3 | 14,600 | 243.4 | 35.4 | 313.8 | 45.7 | 11.1 | 22 | 33.1 | 78.8 | 5.4 |
| 4.5 | 21,900 | 277.1 | 40.3 | 363.5 | 52.9 | 16.7 | 22 | 38.7 | 91.6 | 4.2 |
| 6 | 29,200 | 306.2 | 44.6 | 406.4 | 59.1 | 22.2 | 22 | 44.2 | 103.3 | 3.5 |
| 7.5 | 36,500 | 329.3 | 47.9 | 441.2 | 64.2 | 27.8 | 22 | 49.8 | 114.0 | 3.1 |
| 12 | 58,400 | 387.7 | 56.4 | 529.9 | 77.1 | 44.4 | 22 | 66.4 | 143.5 | 2.5 |
| Ground Water Treatment | | | | | | | | | | |
| 1.5 | 7,300 | 234.9 | 34.2 | 240.7 | 35.0 | 6.4 | 22 | 28.4 | 63.4 | 8.7 |
| 2.5 | 12,200 | 298.5 | 43.4 | 307.4 | 44.7 | 10.1 | 22 | 32.1 | 76.8 | 6.3 |
| 3 | 14,600 | 301.8 | 43.9 | 311.5 | 45.3 | 12.4 | 22 | 34.4 | 79.7 | 5.5 |
| 4.5 | 21,900 | 310.0 | 45.1 | 321.6 | 46.8 | 17.8 | 22 | 39.8 | 86.6 | 4.0 |
| 6 | 29,200 | 366.5 | 53.3 | 379.8 | 55.3 | 23.8 | 22 | 45.8 | 101.1 | 3.5 |
| 7.5 | 36,500 | 372.1 | 54.1 | 386.8 | 56.3 | 29.2 | 22 | 51.2 | 107.5 | 2.9 |
| 12 | 58,400 | 385.4 | 56.1 | 403.7 | 58.7 | 45.6 | 22 | 67.6 | 126.3 | 2.2 |

Costs exclude construction contingencies and engineering

The costs of the various components of the four types of water supply systems reviewed above (conventional, Barangay, shared connections, and public standpipes) are contained in Table 5.3.

## 5.8 Review of TAMS Designs for Water Treatment

The TAMS designs for water treatment works were developed in 1966 as part of the TAMS assignment to train Thai engineers in planning, design and construction of piped water systems. Rapid construction of a large number of systems was part of the assignment. So also was the requirement that both design and construction supervision should be largely done by Thai engineers who were relatively inexperienced at the start of the work. Standardization of design was natural under the circumstances.

The TAMS designs were developed for populations of 1,000 to 15,000 and most were built for populations greater than 5,000. The TAMS designs were simple and uniform and good for their purpose which included serving the larger rural towns. These criteria, however, no longer apply and more has been learned about treating water in Thailand. Therefore it is natural that the designs should be superceded, and they have been.

Thai engineers have already modified the TAMS designs significantly. Treatment works differing in various ways from the TAMS design have been designed by Thai engineers, have been built, and are working satisfactorily.

Any new program to build rural piped water systems should not adopt the TAMS designs. Rather the new program should use those parts of the TAMS designs which are appropriate for today's conditions.

Our present conception of what is appropriate for small rural villages in the Northeast includes:

- The use of slow sand filters to treat surface water. One reason for this suggestion is that slow sand filters provide better biological purification in themselves than do rapid sand filters. Rapid sand filter plants which we saw were not using coagulant and disinfectant without which they are not effective.

- The use of earth embankment instead of concrete walls where embankments are cheaper.

- The use of wood stave or ferro-concrete tanks as elevated storage in place of reinforced concrete.

TABLE 5.3

1981 COSTS OF VARIOUS PIPED WATER SYSTEMS

| SYSTEM TYPE | CONVENTIONAL | | | | BARANGAY III A | | | | SHARED CONNECTIONS | | | | PUBLIC STANDPIPES | | | |
|---|---|---|---|---|---|---|---|---|---|---|---|---|---|---|---|---|
| SOURCE TYPE | SURFACE | | GROUND | | SURFACE | | GROUND | | SURFACE | | GROUND | | SURFACE | | GROUND | |
| | 2000 | 750 | 2000 | 750 | 2000 | 750 | 2000 | 750 | 2000 | 750 | 2000 | 750 | 2000 | 750 | 2000 | 750 |
| A. Source and Treatment Works Construction | (12 cu m/hr) | (4.5 cu m/hr) | (12) | (4.5) | (12) | (4.5) | (12) | (4.5) | (6) | (2.5) | (6) | (2.5) | (4.5) | (1.5) | (4.5) | (1.5) |
| 1. Materials cost/cu m | 1.0 | 1.8 | 1.0 | 2.1 | 1.0 | 1.8 | 1.0 | 2.1 | 1.5 | 2.9 | 1.8 | 3.6 | 1.8 | 3.8 | 2.1 | 4.7 |
| 2. Materials cost/capita per year | 28.2 | 53.7 | 28.0 | 60.1 | 28.2 | 53.7 | 28.0 | 60.1 | 22.3 | 47.2 | 26.7 | 57.[illegible] | 20.2 | 37.1 | 22.6 | 45.6 |
| 3. Total cost/cu m | 1.3 | 2.4 | 1.0 | 2.1 | 1.3 | 2.4 | 1.0 | 2.1 | 2.0 | 3.6 | 1.9 | 3.7 | 2.4 | 4.6 | 2.1 | 4.8 |
| 4. Total cost/Capita per year | 38.6 | 70.5 | 29.3 | 62.4 | 38.6 | 70.5 | 29.3 | 62.4 | 29.6 | 58.0 | 27.6 | 59.6 | 26.4 | 44.7 | 23.4 | 46.7 |
| B. Elevated Storage | (30 cu m) | (10 cu m) | (30 cu m) | (10 cu m) | (10 cu m) | (5 cu m) | (10 cu m) | (5 cu m) | (20 cu m) | (10 cu m) | (20 cu m) | (10 cu m) | (20 cu m) | (10 cu m) | (20 cu m) | (10 cu m) |
| 1. Materials cost/cu m | 0.3 | 0.5 | 0.3 | 0.5 | 0.2 | 0.3 | 0.2 | 0.3 | 0.5 | 0.9 | 0.5 | 0.9 | 0.8 | 1.4 | 0.8 | 1.4 |
| 2. Materials cost/capita/year | 6.8 | 10.3 | 6.8 | 10.3 | 3.9 | 7.1 | 3.9 | 7.1 | 5.5 | 10.3 | 5.5 | 10.3 | 5.5 | 10.3 | 5.5 | 10.3 |
| 3. Total cost/cu m | 0.5 | 0.7 | 0.5 | 0.7 | 0.3 | 0.5 | 0.3 | 0.5 | 0.8 | 1.4 | 0.8 | 1.4 | 1.2 | 2.1 | 1.2 | 2.1 |
| 4. Total cost/capita/year | 10.5 | 15.6 | 10.5 | [illegible] | 5.9 | 10.8 | 5.9 | 10.8 | 8.5 | 15.6 | 8.5 | 15.6 | 8.5 | 15.6 | 8.5 | 15.6 |
| 5. Materials Construction Cost Bt (000) | 90.2 | 50.8 | 90.2 | 50.8 | 50.8 | 35.3 | 50.8 | 35.3 | 73.0 | 50.8 | 73.0 | 50.8 | 73.0 | 50.8 | 73.0 | 50.8 |
| 6. Materials Annual Cost Bt (000) | 13.6 | 7.7 | 13.6 | 7.7 | 7.7 | 5.3 | 7.7 | 5.3 | 11.0 | 7.7 | 11.0 | 7.7 | 11.0 | 7.7 | 11.0 | 7.7 |
| 7. Total Construction Cost Bt (000) | 138.7 | 77.5 | 138.7 | 77.5 | 77.5 | 53.7 | 77.5 | 53.7 | 111.9 | 77.5 | 111.9 | 77.5 | 111.9 | 77.5 | 111.9 | 77.5 |
| 8. Total Annual Cost Bt (000) | 20.9 | 11.7 | 20.9 | 11.7 | 11.7 | 8.1 | 11.7 | 8.1 | 16.9 | 11.7 | 16.9 | 11.7 | 16.9 | 11.7 | 16.9 | 11.7 |
| C. Distribution System Construction Cost | | | | | | | | | | | | | | | | |
| 1. Materials cost/cu m | 1.7 | 1.8 | 1.7 | 1.8 | 1.1 | 1.1 | 1.1 | 1.1 | 1.7 | 1.8 | 1.7 | 1.8 | 1.8 | 1.6 | 1.8 | 1.6 |
| 2. Materials Annual cost/capita | 37.2 | 38.7 | 37.2 | 38.7 | 23.6 | 23.4 | 22.6 | 23.4 | 18.3 | 19.6 | 18.3 | 19.6 | 12.9 | 11.8 | 12.9 | 11.8 |
| 3. Total cost/cu m | 2.7 | 3.0 | 2.7 | 3.0 | 1.9 | 2.1 | 1.9 | 2.1 | 3.2 | 3.7 | 3.2 | 3.7 | 4.0 | 4.3 | 4.0 | 4.3 |
| 4. Total annual cost/capita | 58.6 | 65.2 | 58.6 | 65.2 | 42.2 | 45.0 | 42.2 | 45.0 | 35.2 | 40.9 | 35.2 | 40.9 | 29.0 | 31.1 | 29.0 | 31.1 |
| 5. Materials cost/capita | 256 | 266 | 256 | 266 | 162 | 161 | 162 | 161 | 126 | 135 | 126 | 135 | 89 | 81 | 89 | 81 |
| 6. Total cost/capita | 403 | 448 | 448 | 448 | 290 | 309 | 290 | 309 | 242 | 281 | 242 | 281 | 199 | 214 | 199 | 214 |
| D. Total System Construction Cost | | | | | | | | | | | | | | | | |
| 1. Materials cost/cu m | 3.0 | 4.1 | 3.0 | 4.4 | 2.0 | 3.2 | 2.3 | 3.5 | 3.7 | 5.6 | 4.0 | 6.3 | 4.4 | 6.8 | 4.7 | 7.7 |
| 2. Materials annual cost/capita | 72.7 | 102.7 | 72 | 109.1 | 55.7 | 84.2 | 55.5 | 90.6 | 46.1 | 77.1 | 50.5 | 87.8 | 38.6 | 58.9 | 41 | 67.4 |
| 3. Total cost/cu m | 4.5 | 6.1 | 4.2 | 5.8 | 3.5 | 5.0 | 3.2 | 4.7 | 6 | 8.7 | 5.9 | 8.8 | 7.6 | 11.0 | 7.3 | 11.2 |
| 4. Total annual cost/capita | 107.7 | 151.3 | 98.4 | 143.2 | 86.7 | 126.3 | 77.4 | 118.2 | 73.3 | 114.5 | 71.3 | 116.1 | 63.9 | 91.4 | 60.9 | 93.4 |
| E. Operation and Maintenance | | | | | | | | | | | | | | | | |
| 1. Total annual O & M cost (000) | 103.6 | 50.6 | 104.8 | 51.7 | 70.2 | 40.2 | 71.4 | 41.3 | 50.4 | 33.7 | 51.6 | 34.5 | 42.6 | 29.5 | 43.7 | 30.1 |
| 2. O & M/cu m | 1.8 | 2.3 | 1.8 | 2.4 | 1.2 | 1.8 | 1.2 | 1.9 | 1.7 | 2.8 | 1.8 | 2.8 | 1.9 | 4.0 | 2.0 | 4.1 |
| 3. O & M/capita | 51.8 | 67.5 | 51.8 | 68.9 | 35.1 | 53.6 | 35.7 | 54.9 | 25.2 | 44.9 | 25.8 | 46.0 | 21.3 | 39.3 | 21.8 | 40.1 |
| F. Total System Cost | | | | | | | | | | | | | | | | |
| 1. Total cost/cu m | 6.3 | 8.4 | 6 | 8.2 | 4.7 | 6.8 | 4.4 | 6.6 | 7.7 | 11.5 | 7.7 | 11.6 | 9.5 | 15.0 | 9.3 | 15.3 |
| 2. Total annual cost/capita | 159.5 | 218.8 | 150.2 | 212.1 | 121.8 | 179.9 | 113.1 | 173.1 | 98.5 | 159.4 | 97.1 | 162.1 | 85.2 | 130.7 | 82.7 | 133.5 |

- Subject to successful installation and operation of test systems, the supply of individual houses with flow restrictors and into household storage tanks instead of through meters. This will reduce peak flows and costs and should provide motivation to prevent wastage.

- Subject to successful pilot testing, area by area, the use of the very simple and cheap aeration and rapid gravity filter design of the Rural Water Supply Division (shown to us by the PWWA) for removing iron from groundwater.

- As rapid sand filter plants are not recommended, the two story, heavily reinforced, concrete structures standard in the TAMS design should not be built.

## 5.9 Administration of Village Piped Water Supplies

Village water supplies have been administered and controlled by the governing body of the sanitary district in which the village is located. Until 1979 the RWSD of the MOPH had funds for visiting these water systems regularly and funds to assist with the construction of repairs or improvements recommended by the RWSD. In 1979 with the establishment of the Provincial Water Works Authority, the funds of the RWSD for this purpose were cancelled.

The PWWA may spend its money only on water systems which it owns and operates. It may also provide technical assistance to the village water systems on a reimbursible basis.

It appears that the administrators of the village water systems generally do not understand either the physical operation and maintenance of the water system or the planning and budgeting necessary to finance operations. This is what the WASH team was told by a number of officials and it is borne out by the observations reported in Appendices C and E.

The memorandum of the Ministry of the Interior of January 4, 1981, (see Appendix F) makes it clear, however, that the sanitary districts continue to be quite independent in their administration of village piped water systems.

## Chapter 6

## ECONOMIC CONSIDERATIONS

In an August 1980 statistical survey of 1,218 rural household in Northeast Thailand, it was found that net household income per capita* was distributed as follows:

| Percentile | Mean (baht/year/cap) |
|---|---|
| 1-20 | 676 |
| 21-40 | 1,490 |
| 41-60 | 2,221 |
| 61-80 | 3,442 |
| 81-100 | 7,374 |

The corresponding overall mean value was ฿3,039 per year.

The same survey showed that, out of 22 items of governmental extension assistance named as being most needed, the following selected frequency and ranking were determined:

| Rank | Item | Frequency (%) |
|---|---|---|
| 1 | Water | 25.1 |
| 2 | Irrigation water | 18.2 |
| 3 | Electricity | 10.8 |
| 4 | New technology | 9.9 |
| 5 | Fertilizer | 8.1 |
| 6 | Roads | 7.2 |
| 9 | Domestic water | 2.7 |

This information confirms the population's very great interest in water.

It also shows that the economic capability is very low. For example, if the total cost of provision of conventional piped water supply service is compared with the mean income (increasing that value by ten percent to allow for inflation to 1981 prices), it amounts to about six percent. This must be regarded as high in relation to general experience elsewhere which suggests that two to four percent of household income spent on water is a practical level. However, the people in this case do have a high level of interest in water so this does not rule out the feasibility of developing a piped water supply.

---

* Net household income is gross household income net of rent and interest payments and work expenses.

More is to be learned by observing the quintile groups and by considering the financial rather than generalized economic implications. As an illustration, if people in the top quintile were asked to pay the operation and maintenance cost only, this would amount to less than one percent of the mean income of that group. The full cost would correspond to about 2.5 percent. In the third quintile, the corresponding figures are: operation and maintenance only, 3.2 percent; and full cost, almost 10 percent. In the lowest quintile, these figures become: operation and maintenance only, 9 percent; full cost, 27 percent.

Regardless of willingness to pay, this suggests that there is a capability on the part of a substantial segment on the rural population to pay the full cost of piped water supply service and of a great part (perhaps of the order of half the total) to pay operating costs.

We regard local support of at least operating costs as being crucial to successful continued operation of piped water supply systems once constructed. Government funding required to pay for the materials for even half of the total rural population would amount to over ₱500 million per year if spread over a 10-year period. From the above factors we would tend to conclude that while conventional metered or Barangay Type III-A systems of piped water supply are certainly technically and economically feasible for some part of the population, they are not for the entire population.

The use of shared connection systems with reduced unit costs would give better access for piped systems and would still provide the necessary mechanism for control of wastage. Its viability for any part of the population, however, will depend on suitable organizational and financial arrangements being made for operation and maintenance and on the recruitment and training of technical staff for the planning, design, and supervision of construction of individual systems.

It is of some interest to compare the unit costs presented in Chapter 5 with those of the Potable Water Project. An average per capita cost of US$6.80 (average 1966-9) was quoted in the 1980 Impact Report. A paper by Somnuek Unakul (Ref. 9) shows the clear relationship between per capita cost and community size. By fitting a curve to Mr. Somnuek's data and reading from the curve we estimate that the 1968 construction costs for villages of 750 population and 2,000 population which obtain water from surface sources would have been $18.30 and $13.30 per capita.

Figure 7 shows an increase of an average of eight percent a year in costs from 1968 to 1979 for the four indices shown. Information from Ms. Supanee Artachinda of USAID Thailand indicated general inflation had run about 19 percent from 1979 to 1980 and was expected to run about 10 percent from 1980 to 1981. Combining these figures results in an increase in costs to an index figure of about 300 in 1981 compared with the 100 used as a base in 1968 for the indices of Figure 7. Escalating the 1968 imputed costs for the Potable Water Project to 300 percent it is estimated that the 1981 per capita construction costs will be $55 and $40 for populations of 750 and 2,000 respectively. Our own estimates, using the cost saving designs proposed in this report, show construction costs for surface water supplies serving standposts to be $31 and $22 per capita for populations of 750 and 2,000, respectively, which become $40 and $29 per capita including 30 percent for engineering and contingencies.

Judging from figures in the paper by Somnuek Unakul referred to above, a village of 2,000 may be able to contribute about 15 percent to the capital cost of its water system and one of 750 about three or four percent.

It should be noted that there is no real data on income distribution between villages or within any given village. The percentage of villages which can be served with piped water and the proportion of households in such villages which can have piped water connections cannot be determined without some information of this type.

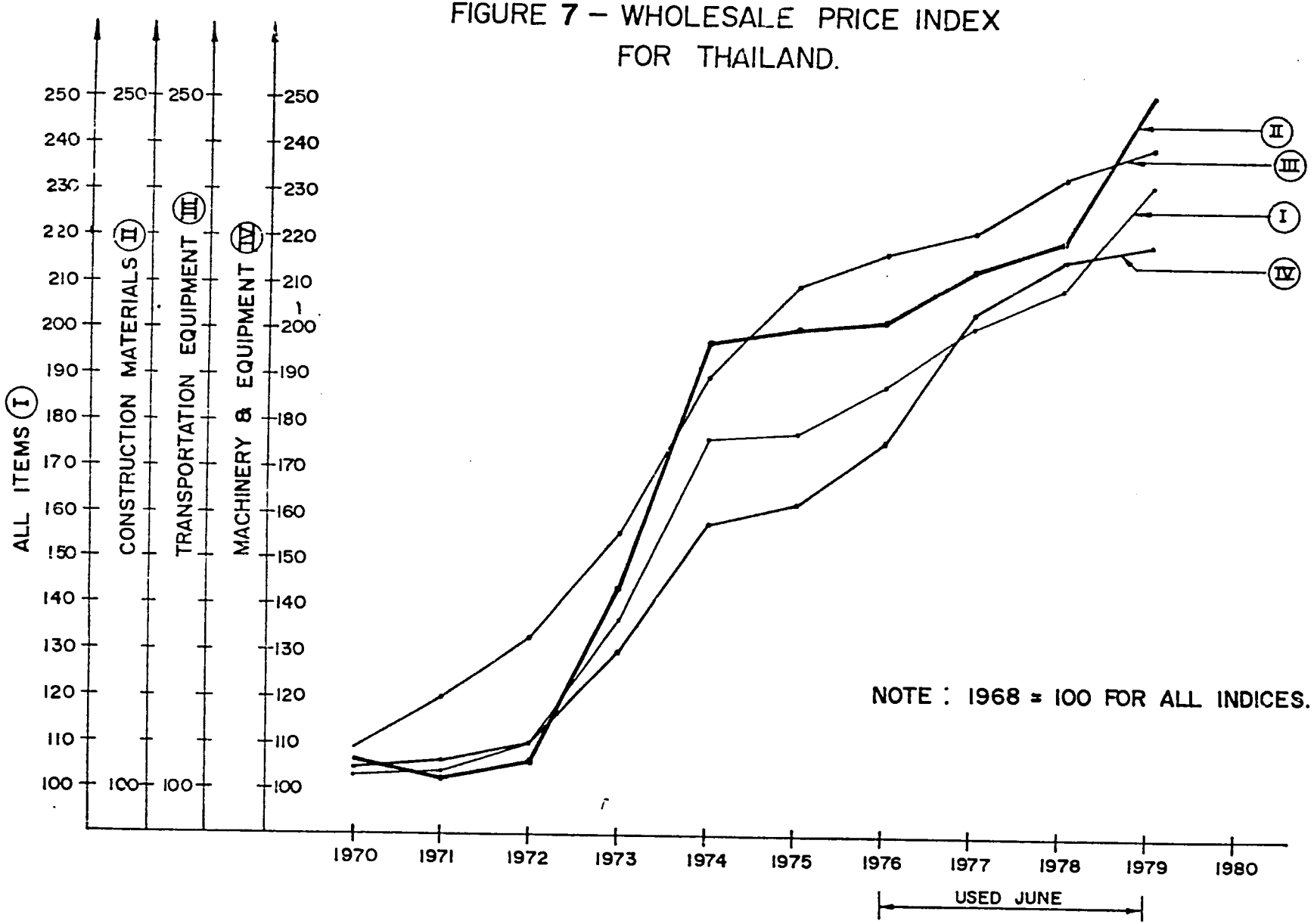


FIGURE 7 – WHOLESALE PRICE INDEX FOR THAILAND.

METROPOLITAN ENGINEERING CONSULTANTS

## Chapter 7

## SUGGESTIONS FOR FURTHER STUDIES

### 7.1 Studies Preparatory to the Project Paper

The following suggestions are made for studies to be made prior to preparation of the Project Paper:

1) Study and recommend the manpower, organization, training, and financial conditions essential for project first phase feasibility:

   (A) Review prior documents.

   (B) Review structure of local government in rural areas of Northeast Thailand and relationships to central government.

   (C) Review with USAID the technologies to be used and the overall program and budget.

   (D) Review economic data, including results of (2) below, and evaluate rural water supply experiences of central government agencies.

   (E) Estimate professional, technical, administrative and support manpower needed to: establish selection criteria, select villages, establish design criteria, prepare standard and individual designs, involve the communities, set up rules for and monitor operation and maintenance, perform operation and maintenance, considering results of studies numbers (3) and (5) below.

   (F) Recommend a recruitment and training program.

   (G) Recommend local administrative arrangements and the services/inputs/characteristics (not name) of responsible central government agency.

2) Conduct field surveys to establish representative household income cross-sections:

   (A) of households within typical villages

   (B) of villages with respect to one another in the Northeast as a basis for establishing selection criteria in study number (4) below.

3) Study and recommend, in discussion with the government executing agency, procedures by which a baseline will be established at the beginning of project implementation and by which monitoring of representative project impacts against controls will begin during the project period and will be repeated in the future. Potential data items to be considered include population, number of households, physical natures and condition of water supply facilities, average household income, infant mortality, population using and drinking project water and contaminated water, average water consumption, and water quality.

4) Study and recommend criteria for selection of project villages from among candidates proposed by village committees, districts and changwats. These criteria to take account of:

   (A) Expressed local need

   (B) Need to serve (by more than one method if necessary) substantially all inhabitants of each selected village

   (C) Economic conditions including results of study number (2) above

   (D) Physical conditions including availability of alternative supplies

   (E) Cost

   (F) Administrative support and funds available

5) Study and recommend extent of technical investigations within the project prior to detailed design of individual facilities. Suggested items include geophysical studies, pilot plant studies, palatability studies, stream flow guaging and other hydrology studies, water quality studies. Recommend extent and scope of project engineering effort within central and local government and by local and (if needed) U.S. consultants.

## 7.2 Basic Studies Undertaken as Part of the Project

Certain basic studies are recommended including:

(A) the amount of water village families will carry home from various distances,

(B) the amount of water actually used and for what purposes in villages and under what conditions,

(C) the drinking water preference in villages and how the dislike of piped water and drilled well water can be overcome (for instance, how difficult would it be to get village people accustomed to chlorinated water?),

(D) methods of obtaining seepage or groundwater of good sanitary quality originating from ponds of poor sanitary quality,

(E) improvement in sanitary quality which can be obtained by various methods of protecting ponds from pollution, and various methods of abstracting this water, and

(F) use of charred rice husks as a filter media, replacing sand, in treatment works serving piped village water systems.

## REFERENCES


1. Dworkin, D.M., and B.L.K. Pillsbury, The Potable Water Project in Rural Thailand, Project Impact Evaluation No. 3, U.S. Agency for International Development, Washington, D.C., May 1980.

2. Ministry of Public Health, Thailand Health Profile, Bangkok, 1980 Edition.

3. Karlin, B., Thailand's Water Seal Privy Program, USOM (now USAID), Bangkok (1960/61).

4. The World Bank, Village Water Supply, Washington, D.C., 1976.

5. The World Health Organization, Community Water Supply and Sewage Disposal in Developing Countries, World Health Statistics, Volume 26, No. 11, Geneva, 1973.

6. White, G.F., D.J. Bradley, and A.U. White, Drawers of Water: Domestic Water Use in East Africa, Chicago, 1968.

7. Dieterich, B.H., and J.M. Henderson, Urban Water Supply Conditions and Needs in Seventy-Five Developing Countries, World Health Organization, Geneva, 1963.

8. Ministry of Local Government and Community Development, Barangay Water Program Administrative Procedures (Section 5, Detailed Planning - Technical), Philippines, 1980.

9. Somnuek Unakul, Thailand's Rural Community Water Supply Program, paper presented at Water supply and Sanitation Seminar, Asian Institute of Technology, Bangkok (January, 1971).

## BIBLIOGRAPHY


1. UNICEF, Recommendations for UNICEF Assistance to Thailand, 1979-1982, extract, Section D, "Rural Water Supply and Sanitation"

2. USAID, Potable Water Project in Rural Thailand, Project Impact Evaluation Report No. 3, Bangkok, May 1980

3. Community Potable Water Project Thailand, Tippetts-Abbett-McCarthy Stratton, Monthly Report Oct. 1967

4. ARD Well Drilling Project Study, Prepared by J. W Neave S.J. Bargnesi, April 1979

5. USAID, Rural Water and Sanitation Project USAID/Thailand, Project Indentification Document, September 1980

6. Rapid Assessment Report, International Drinking Water Supply and Sanitation Decade, Bangkok, November 1978

7. Preliminary Country Report, International Drinking Water Supply and Sanitation Decade, Bangkok, March 1980

8. World Bank, Project Document for Rural Piped Water Supply, Bangkok

9. Provincial Water Supply Project, Staff Appraisal Report, Thailand, May 1980

10. Domestic Water for Rural Thailand, End-of-Tour-Report, prepared by John W. Neave, Bangkok, June 1971

11. Stategy and Guidelines for Improvements in Sanitation and Water Supply in Selected Areas of Thailand, Report prepared by Charles Pineo, Rifat Barokas and Max Batavia, November 1979.

12. USAID, USAID/Thailand Health, Population,and Nutrition Needs Assessment, May 1980

13. Interim Report on Drinking Water/Protected Dug-Well Programme, Thailand, Prepared by Boleslaw Jan Kukielka, Bangkok, December 1980

14. Rural Water Supply Planning Sub-Committee, Thai National Economic and Social Development Board, UNICEF, Evaluation of Rural Water Supply Projects in Thailand,

15. Ministry of Health, Thailand Health Profile, Bangkok, 1980

16. National Economic and Social Development Board, Water for the Northeast, Report of AID to NESDB,, 1978

17. Asian Development Bank, Reconnaissance Mission Report, Kingdom of Thailand, Village Water Supply and Sanitation Sector, prepared by Brian Grover and Boleslaw Jan Kukielka, September 1980

18. Tippetts-Abbett-McCarthy-Stratton, Community Water Supply Project, Final Report, August 1969

19. Somnuck Unakul, "Thailand's Rural Community Water Supply Program" in M.. Pescod and D.A. Okund, Water Supply and Wastewater Disposal in Developing Countries, Report of a Seminar, Bangkok 19-23 January 1970

20. Ministry of Local Government and Community Development, Barangay Water Program Administrative Procedures. Section

APPENDIX A

Water and Sanitation for Health (WASH) Project
Order of Technical Direction (OTD) No. 38

April 8, 1981

TO: Mr. James Arbuthnot, P.E.
AID WASH Contract Project Director

FROM: Mr. Victor W.R. Wehman, Jr., P.E., R.S. VWW
AID WASH Project Manager

SUBJECT: Provision of Technical Assistance Under WASH Project Scope of Work to USAID/Thailand (Development of Rural Water Supply Project)

REFS: STATE 280469 (20 Oct 80), BANGKOK 55702 (18 Nov 80); TELCOM (E. McJunkin/D. Oot), Attached Bibliography.

1. WASH contractor/subcontractor/consultants requested to provide two senior rural water supply specialists to assist USAID/Thailand in further development of project described in PID "Rural Water and Sanitation Project" dated September 12, 1980.

2. WASH contractor/subcontractor/consultants authorized to expend up to 28 person days, each for 2 individuals during the period April - June 1981 with a total level of effort authorized of 65 days. One consultant to be a specialist in rural water supply technology, operation, and maintenance. Other consultant to be a specialist in infrastructure organization, financing, economics, and feasibility studies.

Up to 63 person days of international per diem authorized.

3. Consultant tasks include (subject to modification by mission with concurrence from AID WASH Project Manager).

A. Consult with USAID/Thailand/Project Chairman and Committee on its needs for further development of project.

B. Recommend appropriate technologies and levels of service for project beneficiaries, taking into account long-term operation and maintenance, recurrent financing, replicability, institutional infrastructure, and AID Handbook 3 requirements.

C. Review national plans in sector and coordinate with other donors, particularly AsDB, IBRD, UNICEF, and UNDP.

D. Evaluate appropriate institutional arrangements.

E. Develop appropriate cost estimates for project alternatives.

F. Draft terms of reference and job descriptions for project design team to prepare Project Paper (PP).

G. Confer with D. Jones, U.S.G.S. groundwater hydrologist on temporary assignment with mission.

H. Visit the Environmental Science Information Center (ENSIC) at the Asian Institute of Technology (AIT) to review their resources available to AID and WASH and possible cooperative activities with WASH/CIC.

I. Such other tasks as may be requested by the Mission within the level of effort Scope of Work. Preparation of written report to Mission.

4. One round trip authorized for one consultant from WASH headquarters to Bangkok including two stopovers:

A. WHO/Geneva to confer with Somnuek Unakul et al. in regard to subject project.

B. USAID/Manila including Baranguay Water Supply Project II in field. (Report to be filed on applicability of Baranguay concepts to Thailand). Consultant authorized also to visit Asian Development Bank. Consultant authorized 3 days per diem in Philippines and miscellaneous expenses

5. A. One round trip authorized from Singapore to Bangkok for second consultant.

B. Field travel in Thailand is authorized. Vehicle rental/chauffeur hire is authorized as necessary under Scope of Work.

6. Local hire of translators, socialogists, typists, draftsmen, and cost estimators is authorized.

7. Seven-day work-week is authorized if necessary and appropriate. WASH Director will be team leader.

8. WASH contractor will hold formal debriefing upon return from field.

9. Ensure ASIA/TR/HNP (H. Keller) and ASIA/PD (Hasan Hasan) and AID/Thailand Desk Officer (R. Nachtrieb) are fully coordinated with and informed throughout effort as per progress.

10. Mission and desk officers should be contacted immediately and technical assistance initiated as soon as possible or convenient to missions.

11. Appreciate your prompt attention to this matter. Good luck.

ACTION AID-35

---

ACTION OFFICE DSHE-01

INFO AAAS-01 ASEM-01 ASPT-02 ASDP-02 STA-10 ASPD-03 ASTR-01
AADS-01 CH8-01 RELO-01 MAST-01 /025 A2 1123

---

INFO OCT-01 /036 W

----------063167 231020Z /34

P 221443Z JAN 81
FM AMEMBASSY BANGKOK
TO SECSTATE WASHDC PRIORITY 8085

UNCLAS BANGKOK 04425

AIDAC

FOR DS/HEA

EO 12065: NA
SUBJ: WATER AND SANITATION: REQUEST FOR TECHNICAL ASSISTANCE

REF A. STATE 014879, B. BANGKOK 55702

USAID DISTRESSED TO LEARN THAT REFTEL B SENT 18 NOVEMBER APPARENTLY LOST IN THE WASH. REFTEL B CONTAINS REQUEST FOR WASH PROJECT ASSISTANCE AND DETAILED SCOPE OR WORK. PLEASE ADVISE ASAP. ABRAMOWITZ

Department of State

OUTGOING TELEGRAM

PAGE 01 STATE 014879 058405 AID3676
ORIGIN AID-35

ORIGIN OFFICE DSHE-01
INFO AAAS-01 ASEM-01 ASPT-02 ASPD-03 ASTR-01 AADS-01 CH8-01
RELO-01 /012 A3 2

INFO OCT-00 /035 R

DRAFTED BY AID/DS/HEA: F. E. MCJUNKIN: JA
APPROVED BY AID/DS/HEA: C. A. PEASE
AID/ASIA/PTB: J. WILKINSON (PHONE)
DESIRED DISTRIBUTION
ORIGIN DSHE CH 8 INFO AAAS ASEM ASPT ASDP ASPD ASTR AADS SD-00 END
041996 201606Z /34

P 201315Z JAN 81
FM SECSTATE WASHDC
TO AMEMBASSY BANGKOK PRIORITY

UNCLAS STATE 014879

AIDAC ATTN: DAVID OOT, O/HPN

E. O. 12065: N/A

TAGS:

SUBJECT: PLANNING FOR RURAL WATER SUPPLY PROJECT

1. PLEASE ADVISE ON STATUS OF SUBJECT PROJECT PER DISCUSSION DURING MCJUNKIN VISIT.

2. WILL WASH SERVICES BE NEEDED. IF SO, APPROXIMATE SCHEDULE?

3. IF PAR. 2 AFFIRMATIVE, MCJUNKIN WILL TELEPHONE YOU ON OR ABOUT FEBRUARY 3. MUSKIE

UNCLASSIFIED

Department of State

INCOMING TELEGRAM

PAGE 01 BANGKO 55702 181717Z 021455 A105257
ACTION AID-35

ACTION OFFICE ASTR-01
INFO AAAS-01 ASEM-01 ASPT-02 ASOP-02 PPCE-01 POPR-01 PPPB-03
PPEA-01 STA-10 ASPO-03 AADS-01 CMGT-02 CTR-02 OSHE-01
ENGR-02 CHS-01 HEV-09 RELO-01 MAST-01 /046 A1 1

INFO OCT-01 /036 W
----------028239 181733Z /34

P 181327Z NOV 80
FM AMEMBASSY BANGKOK
TO SECSTATE WASHDC PRIORITY 1932

UNCLAS BANGKOK 55702

AIDAC

FOR ASIA/TR/HPN

FOR OS/HEA

EO 12065: NA
SUBJ: WATER AND SANITATION: REQUEST FOR TECHNICAL
ASSISTANCE

REF STATE 273993

1. USAID DELIGHTED TO LEARN OF TECHNICAL ASSISTANCE NOW AVAILABLE TO MISSION UNDER OSB FINANCED WATER AND SANITATION FOR HEALTH (WASH) PROJECT. DURING RECENT VISIT OF EUGENE MCJUNKIN, USAID HAD OPPORTUNITY TO DISCUSS OUR SPECIFIC NEEDS RELATED TO DEVELOPMENT OF RURAL WATER AND SANITATION PROJECT FOR WHICH PID WAS RECENTLY APPROVED (STATE 283463).

2. BASED ON EXTENSIVE DISCUSSIONS WITH MCJUNKIN, USAID WOULD LIKE TO REQUEST ASSISTANCE FROM WASH, FOR FOLLOWING PRE-PROJECT PLANNING ACTIVITIES:

(A) PRELIMINARY REVIEW OF TAMS DESIGN BY WASH CONSULTANTS IN WASHINGTON TO ASSESS DESIGN APPROPRIATENESS AND IDENTIFY POTENTIAL COST-SAVING MODIFICATIONS. MCJUNKIN SUGGESTED USE OF THIS "BRAINSTORMING" APPROACH PRIOR TO MAKING FIELD VISIT. USAID WILL TRANSMIT MASTER SET OF TAMS DRAWINGS AND SPECIFICATIONS TO MCJUNKIN TO BE USED IN THIS EXERCISE. IN CONJUNCTION WITH THIS, WASH STAFF ARE REQUESTED TO ASSEMBLE INFORMATION ON APPROPRIATE LOW-COST ALTERNATIVES TO TAMS DESIGN.

(B) FOLLOWING THIS REVIEW, USAID REQUESTS SITE VISIT BY WATER RESOURCES ENGINEER AND ECONOMIST KNOWLEDGEABLE ABOUT RURAL WATER AND SANITATION PROGRAMS. USING RESULTS OF TAMS REVIEW, ENGINEER WILL INVESTIGATE TECHNICAL AND FINANCIAL FEASIBILITY MODIFIED TAMS DESIGN AS WELL AS OTHER POTENTIAL SYSTEM DESIGNS, BOTH PIPED AND UNPIPED. ECONOMIST WILL CONDUCT PRELIMINARY ANALYSIS OF FINANCIAL AND ECONOMIC VIABILITY OF PROJECT, TAKING INTO ACCOUNT SUCH FACTORS AS POTENTIAL FOR REPLICATION, NEED TO REACH LOW-INCOME PERSONS, AND COMMUNITY ABILITY TO FINANCE SUCH SYSTEMS, BOTH IN TERMS OF CAPITAL AND OPERATIONAL COSTS. ECONOMIST WILL WORK WITH ENGINEER IN COSTING OUT AND COMPARING COST-EFFECTIVENESS OF SYSTEM ALTERNATIVES IDENTIFIED BY THE ENGINEER.

3. USAID ANTICIPATES TWO-PERSON TEAM WILL BE NEEDED FOR 3-4 WEEKS BEGINNING MID-JANUARY, 1981. REQUEST SERVICES OF DENNIS WARNER TO CARRY OUT ECONOMIC

BANGKO 55702 181717Z 021455 A105257
ANALYSIS.

4. DEPENDING UPON THE FINDINGS OF THE AID/W "BRAINSTORMING" AND THE ON-SITE VISIT OF THE WASH-PROVIDED ENGINEER, USAID MAY REQUEST WASH ASSISTANCE IN PROVIDING ADDITIONAL, SPECIALIZED EXPERTISE IN SUCH AREAS AS MATERIAL LOGISTICS/SUPPLY MANAGEMENT, EVALUATING/ENHANCING LOCAL INDUSTRY CAPABILITY IN PUMP OR PIPED SYSTEM FABRICATION AND INSTALLATION, AND MAINTENANCE/OPERATIONS SYSTEMS. REQUEST WASH KEEP THESE POSSIBILITIES IN MIND IN YOUR RESPONSE. WE ANTICIPATE THAT ANY CIVIL WORKS DESIGN EXPERTISE WILL BE AVAILABLE LOCALLY AS NECESSARY.

5. USAID TENTATIVELY REQUESTS FOLLOW-UP VISIT BY ENGINEER/ECONOMIST TEAM IN MARCH/APRIL TO ASSIST IN FINAL DESIGN WORK AND PREPARATION OF PROJECT PAPER. ALL PRELIMINARY STUDIES/ANALYSES WILL HAVE BEEN COMPLETED BY THAT TIME. USAID ANTICIPATES TEAM WILL BE NEEDED FOR FOUR TO SIX WEEKS.

6. REQUEST AID/W COMMENTS/CONCURRENCE PROPOSED WORKSCOPE AND TIMING OF CONSULTATIONS. LEVIN

Department of State

OUTGOING TELEGRAM

PAGE 01 OF 02 STATE 280469 004528 AID7323
ORIGIN AID-35

ORIGIN OFFICE ASPD-03
INFO AAAS-01 ASEH-01 ASPT-02 ASDP-02 PPCE-01 PDPR-01 PPPB-02 GC-01 PPEA-01 GCAS-01 GCFL-01 STA-10 ASTR-01 AADS-01 DSHE-01 DSRD-02 ENGR-02 CH8-01 HEW-09 RELO-01 DAEN-01 /046 A4 8

INFO OCT-00 EA-12 EB-03 /055 R

DRAFTED BY AID/ASIA/PD/EA:BBLACKMAN/CREECE:EB
APPROVED BY AID/AA/ASIA:JHSULLIVAN
AID/ASIA/PD:GRVANRAALTE (DRAFT)
AID/ASIA/OP:CJOHNSCH/MHORTON (DRAFT)
AID/GC/ASIA:CSTEPHENSON (DRAFT)
~~AID/ASIA/PTB:DGHANDLER (DRAFT)~~
AID/DS/HEA:VLEYMAN (DRAFT)
AID/DS/HEA:KEATAVIA (DRAFT)
AID/ASIA/TR:KRICE/GARGENTO (DRAFT)
AID/ASIA/PTD:RTAYLOR (DRAFT)
AID/DAA/ASIA:FWSCHIECK
DESIRED DISTRIBUTION
ORIGIN ASPD CH8 INFO AAAS ASEH ASPT ASDP PPEA PPCE PDPR PPPB GC GCAS GCFL ASTR AADS DSHE DSRD ENGR HEW STA DAEN 9C-80 END
----------064214 210111Z /67

O 282348Z OCT 80
FM SECSTATE WASHDC
TO AMEMBASSY BANGKOK IMMEDIATE

UNCLAS STATE 280469

AIDAC

E.O. 12065: N/A

TAGS:

SUBJECT: RURAL WATER AND SANITATION PID

1. THE ASIA PROJECT ADVISORY COMMITTEE (APAC) MET ON FRIDAY, OCTOBER 3, 1980, AND REVIEWED AND APPROVED THE SUBJECT PID. ALONG WITH OTHER ISSUES IDENTIFIED BY THE USAID, THE FOLLOWING CONCERNS SHOULD BE ADDRESSED DURING PROJECT DESIGN AND REFLECTED IN THE PP.

2. CONCEPTUALLY, THE PROPOSED PROJECT IS GENERALLY CONSISTENT WITH THE FINDINGS AND RECOMMENDATIONS OF AID PROJECT IMPACT EVALUATION REPORT NO. 3, THE POTABLE WATER PROJECT IN RURAL THAILAND (MAY 1980). THIS AND OTHER PERTINENT EVALUATIONS SHOULD BE CONSIDERED DURING DETAILED PP PREPARATION.

3. ECONOMIC/TECHNICAL ANALYSIS: IN ORDER TO MAXIMIZE FAVORABLE ECONOMIC EFFECTS FROM THEPROJECT, THE USAID/RTG DESIGN EFFORT SHOULD CAREFULLY EXAMINE THE FOLLOWING.

A. APPROPRIATE CURRENT WATER SYSTEM COSTS, INCLUDING PIPED AND NON-PIPED, HOUSEHOLD AND NON-HOUSEHOLD. THE TAMS PIPED SYSTEM MODEL SEEMS SOMEWHAT OUT OF LINE IN TERMS OF COST (DOLS 140 PER CAPITA) AS WELL AS MAINTAINABILITY, IN COMPARISON TO MODELS ADVANCED UNDER OTHER AID-SUPPORTED PROJECTS. PP TEAM SHOULD CLOSELY EXAMINE EXISTING APPROACH WITH INTENT TO INCORPORATE LESS COSTLY SYSTEMS INTO DESIGN. IN THIS REGARD, APPROPRIATELY DESIGNED SYSTEMSWILL VARY WITH COMMUNITY SIZE AND POPULATION DENSITY; E.G., SMALLER, MORE DISPERSED VILLAGES ARE MORE COSTLY TO SERVE AND THUS INDICATE NEED FOR SIMPLER, LESS COSTLY SYSTEMS. PP SHOULD DESCRIBE ANTICIPATED SIZE RANGE OF

STATE 280469 004528 AID7323

ELIGIBLE VILLAGES AND INDICATE HOW SYSTEM DESIGN AND COST WILL VARY WITH SIZE OF COMMUNITY.

B. COST EFFECTIVENESS: PP SHOULD ANALYZE COST EFFECTIVENESS OF ALTERNATIVE INTERVENTIONS RATHER THAN ATTEMPTING TRADITIONAL COST/BENEFIT ANALYSIS.

C. ALTERNATE WATER TECHNOLOGIES SHOULD BE FULLY EXPLORED BY PP TEAM, INCLUDING NEW SYSTEMS THAT MAY OR MAY NOT BE CURRENTLY IN USE IN THAILAND AS WELL AS PIPED AND NON-PIPED OPTIONS, IN AN EFFORT TO DEFINE A RANGE OF BEST-PRACTICE TECHNIQUES. OF INTEREST HERE ARE NEW TECHNOLOGIES THAT CAN PROVIDE FOR HOME WATER STORAGE AND TREATMENT WITH RELATIVELY LOW INITIAL AND MAINTENANCE COSTS. DS/HEA HAS INFORMATION AND IS POUCHING IT TO THE USAID.

4. INSTITUTIONAL ANALYSIS: APAC RECOGNIZED SELECTION OF THE PRIMARY IMPLEMENTING INSTITUTION (RURAL WATER SUPPLY DIVISION OR PROVINCIAL WATER WORKS AUTHORITY) AS A KEY ISSUE. IN LIGHT OF EXISTING INSTITUTIONAL WORKLOADS AND THE USE OF COUNTERPART STAFF BY OTHER DONORS, PP SHOULD INCLUDE DETAILED ANALYSIS CONCERNING RTG PROJECT IMPLEMENTATION CAPACITY, WITH PARTICULAR ATTENTION TO (I) FEASIBLE MEANS OF INTEGRATING THE PROPOSED WATER SUPPLY, LATRINE CONSTRUCTION AND HEALTH EDUCATION INTERVENTIONS AT BOTH INSTITUTIONAL AND VILLAGE LEVELS, (II) INCREMENTAL DEMANDS ON USAID STAFF, AND (III) INCREMENTAL DEMANDS ON VILLAGE-LEVEL WORKERS.

5. BENEFICIARIES: APAC NOTED PAST EXPERIENCE THAT, WHEN PIPED AND METERED WATER SYSTEMS ARE UTILIZED, THE POOREST AMONG VILLAGE DWELLERS ARE OFTEN UNABLE TO AFFORD THE SERVICE. THE PP SHOULD INVESTIGATE THE EXTENT TO WHICH THIS CONCERN CAN BE RECONCILED WITH THE OBJECTIVE OF INSTALLING FINANCIALLY SELF-SUSTAINING WATER SYSTEMS.

6. PROJECT STRATEGY: APAC RECOGNIZED PRIMARY PROJECT STRATEGY OF SIGNIFICANTLY INCREASING QUANTITY OF WATER AVAILABLE TO PARTICIPATING COMMUNITIES (PAGE 9 OF PID). CONCERN WAS EXPRESSED, HOWEVER, ABOUT CONCURRENT NEED TO IMPROVE QUALITY OF WATER USED FOR DRINKING AND COOKING. IT WAS NOTED THAT, WITH TODAY'S TECHNOLOGY, ADDITIONAL COST PER CAPITA OF PROVIDING SAFE WATER WHILE PROVIDING INCREASED QUANTITIES IS MINIMAL, BOTH IN TERMS OF INITIAL COST AND OPERATION AND MAINTENANCE, PROVIDED SYSTEM DESIGN ISSUES ARE ADDRESSED BY SANITARY ENGINEERS EXPERIENCED IN RURAL WATER SUPPLY AND SANITATION. APPROACH OF PROVIDING FOR INCREASED QUANTITIES OF SAFE WATER COINCIDES WITH A.I.D.'S POLICY PAPER ON RURAL WATER SUPPLY AND SANITATION PROJECTS; A NEW POLICY PAPER IS EXPECTED TO BE ISSUED BY MID-NOVEMBER CONFIRMING THIS BASIC POLICY.

7. PROJECT PERIOD: THE APAC QUESTIONS WHETHER THREE YEARS WILL BE SUFFICIENT TO FULLY ACCOMPLISH PROJECT OBJECTIVES, I.E. COVERING 300 VILLAGES. THE USAID/RTG SHOULD CONSIDER A LONGER PROJECT PERIOD.

8. PROJECT DEVELOPMENT RESOURCES: APAC SUGGESTS THAT MISSION CONSIDER UTILIZING INTERNATIONALLY-EXPERIENCED RURAL WATER SUPPLY AND SANITATION PERSONNEL TO ASSIST USAID/RTG OFFICIALS IN THINKING THROUGH NEW AND/OR EFFECTIVE OPTIONS BEING TESTED IN OTHER COUNTRIES. BESIDE SPECIALISTS IDENTIFIED IN PID, MISSION MAY WISH TO BRING IN A SOCIAL SCIENTIST AND SPECIALISTS IN OPERATION AND MAINTENANCE,

TRAINING AND APPROPRIATE TECHNOLOGY, ALL OF WHOM SHOULD BE EXPERIENCED IN RURAL WATER SUPPLY AND SANITATION. PP SHOULD DESCRIBE EXTENT OF PLANNED MISSION INVOLVEMENT IN MANAGEMENT AND MONITORING OF PROJECT, AS WELL AS POSSIBLE NEED FOR PSC ASSISTANCE (E.G. FULL-TIME SANITARY ENGINEER) TO ACT AS PROJECT MONITOR DURING PROJECT IMPLEMENTATION.

9. INITIAL ENVIRONMENTAL EXAMINATION: THE IEE PRESENTED IN THE PID IS INCOMPLETE; SEVERAL PAGES WERE NOT INCLUDED. PLEASE TRANSMIT FULL IEE FOR REVIEW BY AID/W ASAP.

10. APPROVAL AUTHORITY: IN VIEW OF IMPORTANT DESIGNISSUES OUTSTANDING, ANDPOSSIBLE REPLICABILITY OF PROJECT ELSEWHERE IN BUREAU, . APAC DECIDED

AUTHORIZATION SHOULD BE RETAINED AT AID/W. CHRISTOPHER

DATE: 4/23/81

REPLY TO ATTN OF:

Terms of Reference
Part 3

SUBJECT: Further Clarification of WASH Team Workscope

TO: Mr. Arbuthnot/Mr. McJunkin

FROM: David Oot, O/HPN
USAID/Thailand

REF: A. BANGKOK 55702, B. BANGKOK 19515, C. Order of Technical Direction No. 38

Based on our discussions with the WASH consultant team during the first few days of their visit, we have decided to limited the workscope with regard to the issue of economic feasibility. Specifically, we would like the team to prepare an economic analysis (rather than an in-depth assessment of economic feasibility) showing cubic meter and per capita costs and other unit costs as deemed appropriate by the consultants of a range of piped and non-piped systems.

USAID intends to use the findings of the WASH team's economic analysis to determine, jointly with our RTG counterparts, which system or combination of systems will be feasible in Northeast Thailand. We do appreciate, however, the considerable knowledge and experience that the WASH team can bring to bear on the question of economic feasibility. For that reason, it was agreed that the team will provide a preliminary assessment and comments regarding the economic feasibility of the alternative systems identified. This statement will necessarily have to be fairly general in nature, using information such as rural income per capita, and should draw upon their experience in other similar LDC settings. The team will also assist USAID in identifying the additional information required to make a final determination regarding economic feasibility.

Clearances:

HPN:Merrill [illegible] date 4/25/81

PPD:Odell [illegible] date 4/24/81

Buy U.S. Savings Bonds Regularly on the Payroll Savings Plan

OPTIONAL FORM NO. 10
(REV. 7-76)
GSA FPMR (41 CFR) 101-11.6
5010-112

FM AMEMBASSY BANGKOK

TO SECSTATE WASHDC PRIORITY 7028

BT

UNCLAS BANGKOK 19515

AIDAC

FOR DS/HEA

EO 12065: NA
SUBJ: WATER AND SANITATION: WASH CONSULTANT TEAM

REF A. STATE 87150, B. BANGKOK 55702

1. ARBUTHNOT AND THOMAS HAVE ARRIVED AND SHOWN US COPY OF ORDER OF TECHNICAL DIRECTION NO. 38 WHICH DESCRIBES PROPOSED SCOPE OF WORK FOR SUBJECT CONSULTANCY. BASED ON OUR REVIEW OF WORKSCOPE, HOWEVER, USAID BELIEVES THAT SEVERAL ISSUES INCLUDED IN AID/W CAN BETTER BE UNDERTAKEN BY USAID STAFF AND LOCAL CONSULTANTS AS PART OF PRE-PROJECT DESIGN WORK. FOR THAT REASON, USAID PROPOSES SCOPE OF WORK SIMILAR TO THAT CONTAINED IN REFTEL B. REVISION IS AS FOLLOWS:

- A. REVIEW FY 82 WATER AND SANITATION PID AND PROVIDE PRELIMINARY ASSESSMENT OF TECHNICAL AND ECONOMIC FEASIBILITY OF PROVIDING CLEAN WATER TO SMALL COMMUNITIES OR RURAL POPULATION CONCETRATIONS OF 2,000 POPULATION OR LESS USING PIPED WATER SYSTEMS.

- 1. TECHNICAL FEASIBILITY

- ASSESSMENT OF TECHNICAL FEASIBILITY WILL INCLUDE REVIEW OF TAMS DESIGN, IDENTIFICATION OF POTENTIAL COST-SAVING MODIFICATIONS, AND CONSIDERATION OF ALTERNATIVE LOW-COST PIPED SYSTEM DESIGNS. IN CONSIDERING THE TECHNICAL FEASIBILITY, ATTENTION SHOULD BE GIVEN TO TECHNICAL ISSUES RELATED TO SYSTEM INSTALLATION, MAINTENANCE, AND REPAIR. SYSTEM ASSESSMENT SHOULD INCLUDE DISCUSSION OF FEASIBILITY UNDER FOLLOWING ALTERNATIVE ASSUMPTIONS:

- (A) GROUND WATER/TREATED SURFACE WATER
- (B) AVAILABILITY/NON-AVAILABILITY OF ELECTRICITY
- (C) ROUTINE MAINTENANCE TO BE DONE BY VILLAGE-BASED OPERATOR.

- FOR TECHNICAL, AND FOR OTHER REASONS, PIPED SYSTEMS MAY BE INAPPROPRIATE FOR CERTAIN AREAS OF RURAL NORTHEAST THAILAND. REVIEW OF TECHNICAL FEASIBILITY, THEREFORE, SHOULD INCLUDE IDENTIFICATION, DESCRIPTION, AND TECHNICAL ASSESSMENT OF APPROPRIATE ALTERNATIVE NON-PIPED SYSTEMS. PREPARATION OF THIS ASSESSMENT WILL INVOLVE OBSERVATION OF SELECTED SYSTEMS IN THE FIELD AS TIME PERMITS.

2. ECONOMIC ANALYSIS

FOR EACH OF THE SYSTEMS IDENTIFIED ABOVE, ESTIMATE THE PER CAPITA COSTS. IF VARIOUS LEVELS OF SERVICE (E.G. STANDPOSTS VS. METERED CONNECTIONS) ARE POSSIBLE WITHIN CERTAIN SYSTEMS, DETERMINE THE MARGINAL AND TOTAL PER CAPITAL COSTS OF EACH LEVEL OF SERVICE FOR EACH SYSTEM IDENTIFIED, PROVIDE A PRELIMINARY ASSESSMENT OF THE POTENTIAL FOR RECOVERING (THROUGH USER FEES) ALL OR PART OF THE COSTS ASSOCIATED WITH SYSTEM INSTALLATION, MAINTENANCE, AND REPAIR.

B. THE PID IDENTIFIES A NUMBER OF FEASIBILITY ISSUES WHICH NEED TO BE RESOLVED PRIOR TO THE PREPARATION OF THE PROJECT PAPER. WE WOULD LIKE THE ASSISTANCE OF THE WASH CONSULTANTS IN PREPARING SCOPES OF WORK FOR THOSE STUDIES WHICH ARE PARTICULARLY CONCERNED WITH THE DESIGN ISSUES IDENTIFIED ABOVE. IN ADDITION, IT IS LIKELY THAT ADDITIONAL PRE-PROJECT FEASIBILITY AND/OR TECHNICAL ANALYSES WILL BE IDENTIFIED BY THE WASH TEAM. WE WOULD ALSO LIKE THE TEAM TO ASSIST IN PREPARING PRELIMINARY SCOPES OF WORK FOR THESE STUDIES, AS WELL. ABRAMOWITZ BT

#9515

UNCLAS BKK 19515

Water and Sanitation for Health (WASH) Project
Amendment to OTD No. 38

TO: Victor W.R. Wehman, Jr., P.E., R.S. AID WASH Manager

FROM: Dennis B. Warner, Ph.D. P.E. Acting WASH Project Director

SUBJECT: Amendment to OTD No. 38 to authorize CDM Boston to develop design criteria for small water treatment systems

REFS: OTD No. 38 (8 April 1981)

According to an April 16 telex from Mr. James Arbuthnot, who is on a WASH field trip to Thailand under OTD No. 38, the USAID Mission in Thailand has cabled DS/HEA for a change in the scope of work of the above OTD. In line with the above change, Mr Arbuthnot requests that DS/HEA authorize CDM/Boston two man days to prepare design materials on small water treatment systems.

It is suggested that the amendment read as follows:

"Amendment 1: The WASH contractor is authorized to provide additional two man days of work through CDM/Boston to review design criteria for small water treatment systems".

OID #38

3034 04/16+
*WASHAID 64552*

82910 AMTEL TH

WESTERN UNION INTERNATIONAL
ARLING TON VIRGINIA. USA

WARNER AID THAILAND CABLING WASHINGTON TODAY ASKING CHANGE SCOPE WORK IN LINE WITH CABLE BANGKOK 55702 OF 18 NOV 18. NEW SCOPE INCLUDE REQUEST WE REVIEW DESIGNS FOR WATER TREATMENT WORKS PREPARED BY TAMS . ALSO INCLUDES REQUEST REVIEW TECHNICAL FEASIBILITY WHICH REQUIRES ESTIMATES OF COST OF WATER TREATMENT WORKS SMALLER THAN ANY TAMS DESIGN. WASH TEAM THEREFORE NEEDS DESIGN CRITERIA WATER TREATMENT PREPARED BY SPECIALISTS IN COM BOSTON OFFICE SO LOCAL ENGINEERS CAN ESTIMATE COSTS TREATMENT WORKS FOR OUR FEASIBILITY STUDY. THEREFORE NOW WISH OFFICE HEALTH AUTHORIZE COM BOSTON TWO MAN DAYS WORK PREPARE DESIGN CRITERIA AND TELEX THEM US BANGKOK IMMEDIATE LY. ALSO YOU ASK BOSTON SPECIFIC QUESTION RELATING PROPOSED USE SLOW SAND FILTERS TREAT MUDDY WATER AFTER PLAIN SEDIMENTATION WITHOUT COAGULATION. CAN PLAIN SEDIMENTATION WITHOUT COAGULATION BRING TORBIDITY DOWN TO THIRTY PPM WHICH EYE ESTIMATE MAXIMIMUM FEASIBLE FOR CONTINUOUS APPLICATION SLOW SAND FILTER QUESTION

SECOND ITEM ASK WASH LIBRARY SEARCH FOR ARTICLE WRITTEN BY ROBERT N CLARK ABOUT 1955 OR 1960 DESCRIBING EXPERIENCE WITH COVERING DUG N WELLS IN THAILAND. POSSIBLY PUBLISHED IN WHO

T 1955 OR 1960 DESCRIBING EXPERIENCE WITH COVERING DUG N WELLS IN THAILAND.

WASH LIBRARY SEARCH FOR ARTICLE WRITTEN BY ROBERT N CLARK ABOUT 1955 OR 1960 DESCRIBING EXPERIENCE WITH COVERING DUG N WELLS IN TH

1955 OR 1960 DESCRIBING EXPERIENCE WITH COVERING DUG WELLS IN THAILAND THAILAND. POSSIBLY PUBLISHED IN WHO CHRONICLE. CLARK WAS CHIEF SANITARY ENGINEERING SECTION DIVISION OF ENVIRONMENTAL HEALTH WHO GENEVA AT TIME. MAYBE IRC OR WHO GENEVA COULD GIVE REFERENCE ALLOWING US TO FIND ARTICLE IN BANGKOK LIBRARY

JAMES ARBUTHNOT
ROOM 981

CORRECTION: CABLE BANGKOK 55702 OF 18 NOV 80. NEW SCOPE -----

+
*WASHAID 64552*

82910 AMTEL TH
,,,,,,,RRRRRRRRRRRRRRRRRRRRRRRRR

Western Union International, Inc. WUI Telex

## BIBLIOGRAPHY


1 Cable State 280469 of Oct. 80
2 Cable Bangkok 04425 of 22 Jan. 81
3 Cable State 014879 of 20 Jan. 81
4 Cable Bangkok 55702 of 18 Nov. 80
5 Extract, Section D, Rural Water Supply and Sanitation from UNICEF document - Recommendations for UNICEF Assistance to Thailand, 1979-1982
6 AID Project Impact Evaluation Report No. 3, Potable Water Project in Rural Thailand May 80
7 Community Potable Water Project Thailand, Tippetts-Abbett-McCarthy Stratton, Monthly Report Oct. 1967
8 Ard Well Drilling Project Study, Prepared by J.W. Neave and S.J. Bargnesi, April 1971
9 Project Identification Document, Rural Water and Sanitation Projec USAID/Thailand, September 1980
10 Rapid Assessment Report, International Drinking Water Supply and Sanitation Decade, Bangkok, November 1978
11 Preliminary Country Report, International Drinking Water Supply an Sanitation Decade, Bangkok, March 1980
12 Project Document for Rural Piped Water Supply, Bangkok, March 1980
13 Staff Appraisal Report, Thailand, Provincial Water Supply Project, May 1980
14 End-Of Tour-Report, Domestic Water for Rural Thailand, Prepared by John W. Neave, Bangkok, June 1971
15 Appraisal of a Population Project, Thailand, January 1978, World Bank
16 Strategy and Guidelines for Improvements in Sanitation and Water Supply in Selected Areas of Thailand, Report prepared by Charles Pineo, Rifat Barokas and Max Batavia, November 1979.
17 USAID/Thailand Health, Population, and Nutrition Needs Assessment, May 1980
18 Interim Report on Drinking Water Protected Dug-Well Programme, Thailand, Prepared by Boleslaw Jan Kukielka, Bangkok, December 1980

## APPENDIX B

## PERSONS CONSULTED

USAID Thailand

Mr. Donald Cohen, Mission Director
Mr. David Oot, Population Adviser
Mr. Henry Merrill, Director/HPN
Mr. Surindr Satchakul, O/HPN
Ms. Supanee Artachinda, O/PPD
Mr. Roderick MacDonald, Director/EST
Mr. Jack Williamson, O/PPD
Mr. Mantara Silawatshananai, O/EST

Also, At Debriefing Session April 29, 1981:

Mr. Robert Queener, Asst. Director
Mr. Bruce Odell, O/PPD
Mr. Sidney Bowers, O/RD

Ministry of Public Health, RTG

Mr. Chit Chaiwong, Director, RWSD
Mr. Suang Liamrangsi, Asst. Director Sanitation Division
Mr. Songsak Sritoomma Asst. Director Sanitation Divison
Mr. Chetpan Karnkaew, Director RWSD
Mr. Paibool Boonyakanjana, Director, Region 3, RWSD
Mr. Wiroj Wiwattanachaisang, Engineer RWSD
Mr. Suchin Yoosawatdi, Director, Region 4, Sanitation Division
Mr. Vichaisak Khoohathong, Asst. Director, Sanitation Division
Mr. Paisal Prigsang, Director, Region 3, Sanitation Division

Provincial Water Works Authority

Dr. Vithya Pienvichitr, Governor
Mr. Sittichai, Rural Water Supply Division
Mr. Ruthai Indrapalita, Manager Khon Kaen Water Works

Department of Mineral Resources

Mr. Charoen Piancharoen, Director Ground Water Division
Miss Angoon Hongnusonthi, Chief
Well Maintenance Section, Khon Kaen

National Economic and Social Development Board

Mr. Nigom Niyamanusorn, Director
Mr. Prajaya Sutabutr, Asst. Director

World Health Organization

Mr. Boleslaw Jan Kukielka,
Team Leader, Thailand environmental Health Project

Metropolitan Engineering Consultants Co-Ltd

Mr. Bamroong Kulratanayan, Managing Director
Mr. Wiset Sangvaree, Engineer

Asian Development Bank

Dr. Nils A. Bruzelius, Project Economist

## APPENDIX C

## FIELD OBSERVATIONS

No.1 Sao Hai Village No. 3 (visited 16 April)
Sao Hai Tambon
Sao hai District
Water Source - Pumping Station on the Pa Sak River, 200 yards upstream from center of town, but stream reverses flow when tide is in.

Standard Design: "Around the end" baffles for mixing, sedimentation, Rapid Sand Filtration in one structure.
Provision for chlorination and addition of alum for coagulation has been made in the past, but are now out of order. Obviously no chemicals, including hypochlorite for disinfection, have been fed for several months.

Operate treatment works 12 hours a day. Pump water to village from 5 a.m. to 9 p.m. Charge 3.5 baht per cubic meter. All 222 connections metered. System operated by the sanitary district, from a local office. Collections are ฿7,000 per months, expenses ฿8,000.

The Sanitary District makes up the difference.

Vice Chairman of Municipality states everybody drinks rain water collected from roofs and stored in cisterns, but the people need piped water system for the drought period, and for washing at all times. The cistern water would be insufficient if not for the piped water.

1st house visited - Has a water meter, Kent brand, which is operating. Confirm they drink cistern water all year around, but find piped water useful. Confirm no pressure in pipes at night. Observed 1/2 inch water in ditch.

4th - 2nd Restaurant - Serve cistern water when they have it. Serve piped water to customers when they must. Keep mixture of rain water and piped water in cisterns.

Observed 10 or 12 faucets in village, all turned off and not leaking.

Vice Chairman stated the district collected about ฿7,000 per month from water users which is assessed by reading meters. Operating expenses are about ฿8,000 per month. The Sanitary district makes up the deficit.

A Plaque on the wall of the treatment works state it cost ฿1,160,000 in Sept. 1976. To pay this off in a 25 year life of the plant would cost ฿168,780 or ฿14,000 per month, at 14% interest rate. The water users are therefore paying about one third of the cost of this water service. They are however, paying nearly enough for operation and maintenance and are paying enough, and in such a manner, as to induce them not to waste water.

It is good the people do not drink this piped water as it is quite unsafe.

No.2 Non Saeng Village (visited 16 April)

Non Saeng District

Water is obtained from a well 70 meters deep drilled by Mineral Resources Department two months ago. This well replaced one drilled about ten years ago immediately adjacent. Apparently the life of these wells is about ten years.

There are two elevated tanks adjacent to the well, an old one of 9 steel tanks on a wood platform, and a newer one of concrete.

Police officers in a nearby station state that the piped water tastes bad and no one drinks it. It also makes what is boiled in it taste bad if it is kept four or five hours.

## APPENDIX D

## PRINCIPAL CENTRAL GOVERNMENT AGENCIES INVOLVED IN COMMUNITY WATER SUPPLY

### Ministry of Public Health

The Sanitation Division of MPH develops demonstration village water and sanitation improvements and motivates villagers to adopt the improvements through health education, training village technicians and setting up demonstration revolving funds. For water supply, the improvements consist almost entirely of providing rain water cisterns. The Division has nine Regional Sanitation Centers, of which two are in the North East.

The Rural Water Supply Division on MPH, which formerly designed and assisted in operating piped water supply systems, still has both a Drilling Section and a Potable Water Section. The Drilling Section provides ground water sources. The Potable Water Section assists villages under about 2,000 population on matters of motor-operated pumping, treatment and distribution, when requested. The Rural Water Supply Division has five Regional Offices, two of which are in the North East. The Rural Water Supply Division does not charge local authorities for its services.

### Provincial Water Works Authority

PWWA was formed in 1979 to take over the piped water supply responsibilities and most of the engineering staff and other resources of the PWD's Provincial Water Works Division and the MPH's Rural Water Supply Division. PWWA owns and operates many urban (Municipal) piped systems and advises local authorities (Municipal and Sanitary Districts with populations over about 5,000) on the design and operation of piped systems. PWWA has no well-drilling capability. PWWA has 15 regional centers including four in the North East. PWWA charges local authorities for its services. Its own systems are self-supporting.

### Provincial Water Supply Division of PWD

The Provincial Water Supply Division of the Department of Public works assists in the improvement of existing locally owned water works in towns and villages in the population range of about 2000 to 5000. Privately owned waterworks are required to register with the PWSD. It plans to set up a joint operator training school with PWWA. PWSD drills wells in rural areas and has 25 drilling rigs. It has a water quality laboratory in

Bangkok plus 6 district laboratories. PWSD provides its technical assistance services free to local authorities.

Groundwater Division of DMR

The Groundwater Division of the Department of Mineral Resources constructs large diameter deep wells for water supply purposes. It has a total of 45 rigs. DMR installs hand pumps on most of its wells. Some of its wells serve piped systems, in some cases with pumps and motors provided by DMR. DMR maintains all of its own pumps and motors. It designs and constructs wells and maintains its pumps free of charge.

Other Agencies Involved

- Office of Accelerated Rural Development (constructs deep and shallow wells, ponds and dams in 56 provinces and sensitive areas; it has a Center for the Northeast at Khon Kaen - provides improvements free of charge).

- Department of Local Administration (allocates budgets to provincial governments for construction of shallow and deep wells and rainwater cisterns in areas not covered by ARD).

- Department of Community Development (encourages village participation in self-help improvement projects including shallow wells and ponds).

- Public Welfare Department
- National Security Command
- Royal Irrigation Department
- National Economic and Social Development Board (coordinates community water supply aspects of the National Five-Year Plans and all foreign assistance; has created a working group on rural water supply under its Water Resources Subcommittee to try to coordinate work of the other agencies involved).

## APPENDIX E

## OBSERVATIONS ON WATER TREATMENT WORKS TREATING SURFACE WATER

1. Sao Hai Village
   Sao Hia Tambon
   Sao Hai District

   Source - Large River, - Intake 200 yards upstream from center of commercial area. However tide was carrying water upstream at the time.

   No disinfectant or coagulant had been used for months, possibly years.

   Conclusion - The piped water was dangerous to drink.

2. Ban Kud Kwang
   Muang District

   Source - A pond which may be a stream in wet season. Pond nearly dry. Buffalo and boys bathing 20 yards from intake.

   Used alum as coagulant and bleaching powder as disinfectant. Amount of disinfectant was estimated to be 1/10 to 1/2 of required amount.

   Conclusion - The piped water was dangerous to drink.

3. Nong Rua Sanitary District
   Nong Rua District
   Kohn Kaen Province

   Source - Flowing stream, five to ten meters wide.

   Was obtaining good coagulation. Did not disinfect. Could expect 90 to 98 percent bacterial removal.

   Conclusion - Water unsafe to drink.

4. Ubonratana Sanitary District

   Source - Pong Lake. The lake is very large. Nevertheless a number of homes have been erected immediately adjacent to the water intake.

   Treatment was intended to be slow sand filtration and chlorination. One of the filters is out of order, one still in use. No chlorination is done.

Conclusion - The water is unsafe.

5. Tambon Non Thai Sanitary District
Non Tahi District

Source - A large artificial pond.

A complete treatment works was provided. It had not been used for a year or two, the water being pumped directly from the pond to the town.

The water is untreated and unsafe.

General

Mr. Paibool Boonyakanjama, Director of the Department of Health, Regional Rural Water Supply office No. 3, Khon Kaen, stated on 22 April 1981 that in general chlorination was not done in the water treatment works, even for surface water. The administrators just did not think it worth while to buy the chlorine powder required. Mr. Paibool seems a knowledgeable sanitary engineer and we accept his statement. It agrees with our observation.

Accordingly, any water system using a surface source will be unsafe. Many of them will provide dangerous, infectious water at times.

The neglect to disinfect is merely an indication of generally poor operation. Four of the five treatment works we visited should have been using a coagulant. Three of the four were not and one of these was bypassing the entire treatment works. The treated water was invariably turbid.

Accordingly, operation of treatment works must be characterized as poor to dangerous, for these rural, essentially unsupervised plants.

APPENDIX F

Top Priority

No. MOI 0311/W 31

Ministry of Interior

January 4, 1981

Subject: Construction of Sanitary District Water Supply in Collaboration with Provincial Water Works Authority.

To: Provincial Governor of Every Province

Enclosed: Correspondence of Office of Royal Decree Committee No. SR 0601/3575 dated Dec. 9, 1981

As various sanitary districts have project to construct water supply in rural areas in collaboration with Rural Water Supply Division, Department of Health, and later there was a reorganization and expansion of water supply activities in the provinces by merging rural water supply activities and provincial water supply activities together, entitled "Provincial Water Works Authority" having the status of "government enterprise" and having procedures of operations different from the former government agency, which created a lot of problems in practice, especially concerning the right of implementation of water supply activities which caused the implementation of construction of water supply in rural areas of various sanitary districts to stop, the Ministry of Interior has, therefore, requested the Royal Decree Committee to decide the problem of the right of implementation of water supply activities according to Provincial Water Works Act, 1969, and the solutions of the Royal Decree are as follows:

Rural Water Supply

1. Rural water supplies that have been completely constructed by using funds from "subsidy" category in Department of Health in collaboration with the counterpart funds of local government (sanitary districts)

and Department of Health has transferred the water supply activities to the local government to implement the activities up to the present days, the right of implementation of the water supply activities belongs to the local government (sanitary districts). It is not necessary to transfer the right of implementation of water supply activities to PWWA. This is in accordance with Section 50 of the Provincial Water Works Act, 1979.

2. Rural water supplies which have been completed or being constructed by using budget of "subsidy" category of Department of Health which has been transferred to PWWA have similar characteristics as the problems in Clause 1, i.e., when PWWA participated in the construction of rural water supply and when it is completed, PWWA has to transfer it to the local government (sanitary district) and the sanitary district will implement the activities in the same was as being transferred from Department of Health because Section of the Provincial Water Works Act stated that PWWA has to incept "assets, right liabilities, etc" of Department of Health.

3. Rural water supplies which are being constructed by the budget of "subsidy" category of PWWA in collaboration with the "counterpart" funds of the local government, when the construction is completed, such rural water supply activities belong to the local agencies (sanitary districts) as afore-mentioned.

Please inform various sanitary districts in your province. Moreover, if any sanitary district in the province wishes to construct water supply by providing counterpart funds in collaboration with PWWA, the sanitary district should request support from Regional Headquarters of PWWA. As for the expenses for the survey, blue print, estimate cost of construction and PWWA subsidy, PWWA will provide service cost for the survey and blue print, the sanitary district has to set up budget estimate for these. If the sanitary district has small income, it may contact Public Works Department because the Public Works Department will provide these services free of charge. As for the counterpart funds to be provided by the sanitary

district, the sanitary district may borrow from the budget of the sanitary district. Any sanitary districts that are implementing the construction of water supplies in collaboration with PWWA, they should continue to carry on the implementation.

---

## APPENDIX G

## NOTE ON BAMBOO REINFORCEMENT OF CISTERNS

The WASH Team has been asked to comment on the practice of bamboo reinforcement of concrete water cisterns.

We believe that bamboo reinforcement as used in these cisterns (our observations were in Region 4) is not effective. We have been informed, however, that several thousand cisterns have been built in Region 4 with bamboo reinforcement with complete success. We cannot speak against such a record.

We suggest that bamboo reinforcement has been successful because no reinforcement is needed. The concrete is well made and is strong enough to accept in tension the small stress occurring. The mix is specified as 1:2:3 which will make a strong concrete if the sand and gravel are well graded and if too much water is not used. So little water should be used that the wet concrete does not pour well into the form, and must be scraped into the form and pushed down around the rienforcement with small sticks or rods.

The cisterns with bamboo reinforcement are never over three meters high. They have a minimum wall thickness of 10 cm of two meters diameter and of 7 cm if of one and one-half meters diameter.

Concrete was observed in one village (not were bamboo reinforcement was in use) which was much too wet, and had necessarily lost much of its strength from an excess of water in the mix. Once the concrete has set, of course, and its volume is fixed, additional water on the surface will help proper curing and is advantageous.

APPENDIX H

UNITED STATES INTERNATIONAL DEVELOPMENT COOPERATION AGENCY
AGENCY FOR INTERNATIONAL DEVELOPMENT
WASHINGTON, D C 20523

June 30, 1981

Camp, Dresser & McKee, Inc.
WASH PROJECT
JUL 1 1981

Mr. James Arbuthnot
Director
CDM WASH
1611 North Kent Street
Arlington, VA 22209

Dear Jim:

Thank you for inviting me to the debriefing session on your recent trip to Thailand. I hope that your work will help the mission in the final preparation of a project paper.

While I agree with most of the issues raised in your report, I have some question on the following items:

P. 12 You quote morbidity figures of 26,000 cases per 100,000 persons annually, from water and food borne disease. These should be qualified as completely unreliable. They are much too low, an average of 1 case annually for every four people.

P. 23 The statement that fecal coliforms in the water collected is considered insignificant, is somewhat misleading. It is relatively insignificant in the case of community epidemics, but fecal material arising from and ingested by the same individual can cause diarrhea. While there may be some immunity from diarrheal agents within a family, I would not regard the presence of fecal contamination of a source of drinking water as insignificant.

P. 26 Your calculation of the cost of rain water from systems of 27 bhat/cubic meter, you say is based on 25 lcd in the wet season and 8 lcd in the dry season. This calculation understates the actual cost. Water systems are conventionally costed out on the basis of sustained yield, in this case 8 lcd. This would triple the price.

P. 29 Construction of system's would have little or no development impact. Eight lcd during the dry season would provide only marginal improvement in the availability of water.

P. 37 The recommendation that quantitative studies of actual usage be made may be unnecessary. Such a study has already been done and reported. The results of the study have been reported in WRR, Vol. 9, No. 5, October 1973, Water Consumption in Small Communities in Northeast Thailand, by R.J. Frankel and P. Shouvanavirakul. I have enclosed a copy of the article.

P. 54 The history of past water system construction indicates that substantial contributions of money have been made by the communities for piped water systems. The contributions were not evenly divided, but were based on the economic conditions of each villager. The community elites value piped water highly and could be encouraged to contribute a disproportionate share of the costs. A study should be made of past contributions. This could be done readily since the records of community contributions are readily available. The statement that half of the population could pay the operating costs is based on a flat rate charge per unit of water.

The charge for use should be based on an increasing block rate schedule with at least two steps, the first that would provide a minimum amount of water at a low ("lifeline") rate. A higher rate for the next, and all subsequent blocks should be set to make the system self-sustaining and to recapture capital for needed expansion.

P. 55 The estimate that villagers may be able to contribute between four and fifteen percent seems exceptionally low by historical standards.

In closing, I commend you for a well balanced and useful report.

Sincerely yours,

Daniel Dworkin
Behavioral Science
Advisor
Bureau for Program and
Policy Coordination

Enclosure: a/s